© Siemens 2020

SIEMENS

Process Automation

Products for Process Instrumentation

Catalog
FI 01

Edition
2021

www.siemens.com/processinstrumentation

© Siemens 2020

Related catalogs

Catalogs for Process Automation

www.siemens.com/pa-catalogs

Process Automation MP 20
Display Recorders
SIREC D

PDF (E86060-K6020-E101-A5-7600)

Process Automation MP 31
SIPART Controllers and Software

PDF (E86060-K6031-A100-B7-7600)

Process Automation WT 10
Products for Weighing Technology

PDF (E86060-K6410-A101-A7-7600)

Process Automation AP 01
Process Analytical Instruments

PDF (E86060-K3501-A101-B4-7600)

Process Automation AP 11
Components for Continuous Emission Monitoring

PDF (E86060-K3511-A100-B4-7600)

SIMATIC ST PCS 7
SIMATIC PCS 7 Process Control System
Vol. 1: System components

E86060-K4678-A111-C6-7600

SIMATIC ST PCS 7 AO
SIMATIC PCS 7
Process Control System
Vol. 3: Add-ons for SIMATIC PCS 7

PDF (E86060-K4678-A121-B5-7600)

SIMATIC ST PCS 7 T
SIMATIC PCS 7 Process Control System
Vol. 2: Technology components

PDF (E86060-K4678-A141-A5-7600)

SIMATIC ST 70
Products for
Totally Integrated Automation

PDF (E86060-K4670-A101-B7-7600)

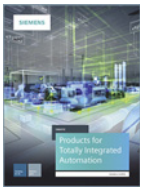

SIMATIC ST 70 N
Products for
Totally Integrated Automation

PDF (E86060-K4670-A151-B1-7600)

Industrial Communication IK PI
SIMATIC NET

E86060-K6710-A101-B8-7600

SITOP KT 10.1
SITOP
Power supply

E86060-D4001-A510-D8

SIMATIC Ident ID 10
Industrial Identification Systems

E86060-K8310-A101-B1-7600

SITRAIN
Digital Industry Academy

www.siemens.com/sitrain

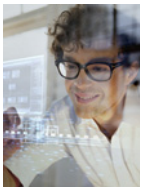

Industry Mall
Information and Ordering Platform
on the Internet:

www.siemens.com/industrymall

Contact
Your personal contact can be found in our
Contacts Database at:

www.siemens.com/automation-contact

© Siemens 2020

Products for Process Instrumentation

Process Automation

Catalog FI 01 · 2021

Supersedes:
Catalog FI 01· 2018

Refer to the Industry Mall for current updates of this catalog:
www.siemens.com/industrymall
and as PDF at the following address:
www.siemens.com/fi01

For comfortable, fast and error free product selection you will get support in our PIA Life Cycle Portal:
www.siemens.com/pia-portal

Please contact your local Siemens branch.

© Siemens AG 2020

Pressure Measurement	1
Temperature Measurement	2
Flow Measurement	3
Level Measurement	4
Positioners	5
Process Protection	6
Supplementary Components	7
Digitalization and Communication	8
Services for Process Instrumentation	9
Appendix	10

The products and systems described in this catalog are manufactured/distributed under application of a certified quality management system in accordance with DIN EN ISO 9001.

© Siemens 2020

How to optimize processes with our automation and instrumentation portfolio

High-quality processes are crucial in the process industry. Only then do you get the required results. And it is only then that plants work efficiently and therefore productively.

Process instrumentation and analytics as well as weighing technology all play a crucial role here. They measure, analyze, regulate, and control industrial processes and thus contribute to increasing the efficiency of process plants and improving their product quality.

Benefit from the versatility of our holistic solutions for your process tasks – with integrated solutions from a single source. Benefit from the openness of the systems. And from constant innovation and comprehensive services.

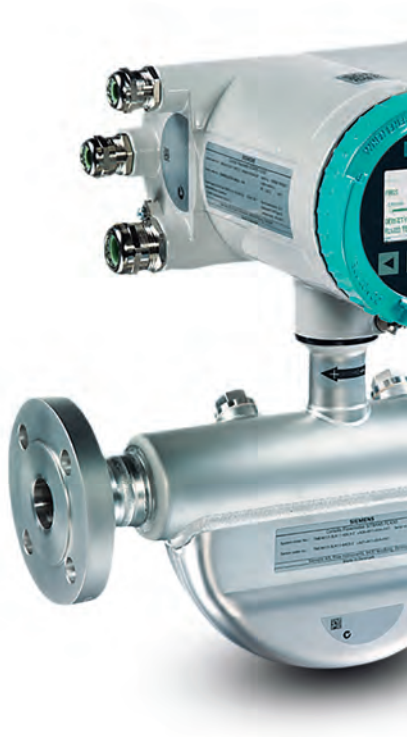

Process Instrumentation | Weighing Technology | Process Analytics | Digitalization | Services

Process Instrumentation 04
Pressure Measurement 06
Temperature Measurement 10
Flow Measurement 14
Level Measurement 20
Positioners 26
Process Monitoring 28
Additional Components 30

Weighing Technology ..... see Catalog WT 10

Process Analytics ..... see Catalog AP 01

Digitalization 32
SIOS 34
COMOS 35
SITRANS IQ 36
NAMUR 37

Services 38
Industry Services 38
Remote Services 40
Partners 41

© Siemens 2020

In the areas of process instrumentation and process analytics as well as weighing and dosing systems, our main focus is on the process industries, such as the chemicals, oil and gas and hydrocarbon processing, water and wastewater, pharmaceuticals, mining, aggregates, cement, pulp and paper, food and beverage, and shipbuilding industries.

© Siemens 2020

How to increase process efficiency and product quality

In field instrumentation, maximum precision and absolutely reliable measurement results are key. Only then can you increase the efficiency of your process plants and improve their product quality. Whether you're dealing with pressure, temperature, flow, or level, we offer you a globally unique range of transmitters for field instrumentation. Our comprehensive portfolio also includes weighing and batching systems, pneumatic valve positioners, process controllers, and process recorders.

© Siemens 2020

© Siemens 2020

Pressure measurement without any “ifs” and “buts”: SITRANS P

SITRANS P is a complete range of measurement instruments for measuring relative pressure, differential pressure, and absolute pressure. In addition to high measuring accuracy and ruggedness, the modular system features superb operating convenience and functionality as well as a perfect safety concept.

SITRANS P320/420 – the first pressure transmitter for remote commissioning of functional safety

- Time and effort savings due to remote commissioning of SIL devices
- Developed in accordance with the IEC 61508 standard for use in SIL 2/3
- Reduced response time increases process efficiency by speeding up the control system’s response to changing process conditions
- Ready for plant digitalization with the HART 7 pressure transmitter: data logging functions and event control deliver users in-depth control and analysis
- User-friendly display due to clear display and diagnostic icons in accordance with NAMUR NE107
- Maintenance cost reduction due to proof test interval up to 10 years
- The transmitter is FM-approved

© Siemens 2020

SITRANS P500

- Deviations from the characteristic curve of less than 0.03% of the calibrated measuring range for different pressure and level requirements
- Design of the measuring cells allows for use with media temperatures of up to 125 °C even without the use of a remote seal system
- Fast step response time (T63) of only 88 ms ensures plant safety in critical applications
- Graphics-enabled display shows curve and trend diagrams for goal-oriented process monitoring

© Siemens 2020

SITRANS LH100/LH300
- Suitable for applications ranging from drinking water or wastewater to corrosive liquids thanks to stainless steel enclosure
- Rugged submersible sensors for hydrostatic level measurement
- Installation possible in pipes with 1" inner diameter

SITRANS P200/210/220
- Single-range transmitter for relative, absolute, and hydrostatic pressure
- Pressure sensors: Stainless steel sensors (SITRANS P210 and SITRANS P220) as well as sensors with ceramic membrane (SITRANS P200)
- Conversion of measured pressure into either 4–20 mA or 0–10 V signal

SITRANS P compact
- Analog transmitter for absolute and relative pressure
- Hygienic design in accordance with EHEDG, FDA, and GMP recommendations
- Stainless steel process connections and enclosure
- Measurement deviation ≤ 0.2%

© Siemens 2021

SITRANS P300

- More than 90 different process connection variants offer the highest degree of flexibility
- Versatile communication connection via HART protocol, PROFIBUS PA, or FOUNDATION Fieldbus
- Fulfills EHEDG, FDA, and 3A requirements
- Maximum measurement deviation of 0.075%
- Can be combined with flush-mounted absolute or relative pressure measuring cells

© Siemens 2020

Because every degree matters: SITRANS T

SITRANS T products are the temperature measurement professionals, even in extreme conditions. Whether used in hot, cold, or hazardous environments – the communicative SITRANS T meets all expectations. And whether you're looking for sensors or transmitters for head, rail, or field mounting – all are available individually or as complete measuring points. Our cost-effective SITRANS T transmitters offer high precision in every application and are quick and easy to connect to thermocouples or resistance thermometers. The SIMATIC PDM intelligent software package permits parameterization in just minutes, and input errors are avoided.

SITRANS TS500 – temperature sensors for pipes and vessels – from simple applications to solutions for harsh environments

- Modular system with thermowell made of tubular or barstock material, extension, connection head, and optional transmitter or display
- Version for intrinsic safety, flameproof, and nonsparking are available

© Siemens 2020

Transmitters for head mounting

SITRANS TH100
- Pt100 single input transmitter
- Diagnostics LED
- Supports four-wire Pt100
- 4–20 mA
- Low-cost and compact

SITRANS TH320
- Universal single input transmitter
- Diagnostics LED
- Supports four-wire RTD/TC/mV and resistances
- Supports Callendar-van-Dusen
- HART 7 + SIL 2/3 (IEC 61508)
- 4–20 mA
- Interface for local HMI

SITRANS TH420
- Universal dual input transmitter
- Hot backup function
- Diagnostics LED
- Supports two four-wire RTD/TC/mV and resistances
- Supports Callendar-van-Dusen
- HART 7 + SIL 2/3 (IEC 61508)
- Interface for local HMI

SITRANS TH400
- Fieldbus transmitter
- For PROFIBUS PA or FOUNDATION Fieldbus
- Configurable with SIMATIC PDM (PA) or AMS (FF)
- Extensive diagnostics and simulation functions
- Transmission of important device and process data via the bus cable

Transmitters for rail mounting

SITRANS TR320
- Universal and single input transmitter
- Diagnostics LED
- Supports four-wire RTD/TC/mV and resistances
- Supports Callendar-van-Dusen
- HART 7 + SIL 2/3 (IEC 61508)
- 4–20 mA

SITRANS TR420
- Universal dual input transmitter
- Hot backup function
- Diagnostics LED
- Supports two four-wire RTD/TC/mV and resistances
- Supports Callendar-van-Dusen
- HART 7 + SIL 2/3 (IEC 61508)

© Siemens 2020

Transmitters for field installation

SITRANS TF with TH400
- IP66/67/68 degree of protection
- Used where there is excessive heat or vibration at the measuring point
- PA/FF communication

SITRANS TF320/420 NEW
- Stainless steel or aluminum enclosure
- Temperature field transmitter for multiple applications
- Configurable via local display
- Full redundancy via hot backup function (TF420)
- SIL 2/3 certified
- HART 7
- 4–20mA
- Combined types of protection available, e.g., Ex d + Ex i

SITRANS TS temperature sensors

SITRANS TS100
- For multiple applications
- Supplied with directly installed cable
- ATEX and IEC EX approvals; can be operated in Zone 0
- Wide range of options thanks to modular principle

SITRANS TS200 compact design
- For multiple applications
- Compact design with directly installed fixed connection (M12, Lemo, etc.)
- ATEX and IEC EX approvals; can be operated in Zone 0
- Wide range of options thanks to modular principle

SITRANS TS300
- Clamp-on temperature sensor
- Design meets EHEDG recommendations and is therefore suitable for use in the food and beverage and pharmaceutical industries
- Replaceable measuring inserts

SITRANS TS Thermowell
- Wide range of lengths and materials
- Comprehensive coverage of applications
- Customer-specific options are possible
- High stability by high-quality materials
- Comprehensive material and quality controls available

© Siemens 2020

Transmitters for fiber-optic temperature measurement

SITRANS TO500

- Fiber-optic temperature transmitter
- Diameter of sensor measuring probe < 2 mm
- Up to 48 measuring points per sensor measuring probe
- Simple and low-cost installation thanks to rolled sensor measuring probe

© Siemens 2020

Everything flows: SITRANS F

Whether measuring gases, liquids, or steam – choosing the right flowmeter is decisive for productivity. This is where the SITRANS F line comes in. Our portfolio contains the fitting flowmeter for every application and medium, with five different flow technologies available to suit a wide range of operating conditions: Coriolis, electromagnetic, ultrasonic, vortex, and differential pressure.

Transmitter SITRANS FCT070 Coriolis flowmeter solution

- Full control and parameterization via the control system
- Direct integration into SIMATIC S7, TIA Portal and PCS 7
- Coriolis technology modul for ET 200SP
- Selection via TIA Selector (secures easy integration in SIMATIC)
- Fast digital signal to sensor with 10 ms update rate
- Full advanced transmitter functionality via automation control
- Over PROFINET, the measure data are transmitted to the automation in real time
- Full hazardous area solutions with use of SITRANS I300 barrier
- Advanced batch control integrated
- Advanced fraction measurements
- Integration function blocs available for all Siemens automation systems

© Siemens 2020

SITRANS FC
Coriolis mass flowmeters SITRANS FC multivariable devices measure the direct mass flow rate of liquids and gases in almost any application. They deliver reliable and repeatable information on mass flow, volume flow, temperature, density, and concentration (e.g., Brix or Plato).

They are available in sensor sizes DN 1,5 to 150 mm with different flowmeter transmitter versions to fulfill requirements for high performance in oil and gas, chemicals, food and beverage, pharmaceuticals, and automotive applications.

Full range of digital transmitters
The uniform sensor and transmitter platform offers solutions for sizes from Di 1,5 to DN 150 mm with three different transmitters

FCT010 single digital channel transmitter
- Full multiparameter Modbus output ideal for PLC integration
- Robust aluminum housing mounted directly on the different sensors, for most sensor sizes
- Small in size, ideal for skids and compact machines
- Full performance in a cost-efficient solution

FCT030 advanged full range transmitter
- Available as compact, remote field-mount and remote wall mounting enclosures
- Multi 4 I/O channels, freely configurable and programmable
- Full package of communication: HART, PROFIBUS PA and DP; Modbus
- Advanced large size graphical display including trend curve and multilevel display views
- Integrated data logger, ideal for diagnostics on advanced applications
- Advanced diagnostic functionality
- Build in programmable settings for optimizing pulsating flow and aerated flow
- Integrated 16+ unique fractions tables for concentration measurements
- Build-in-batch controller for two-stage batch applications

SITRANS FCS300
Innovative and user-friendly transmitters FCT030, FCT010, or FCT070 with audit trails, trend curves, data logger, and advanced diagnostic functionalities
- Dual splitflow design in sizes from DN 15 to DN 150 in different versions, wetted material in AISI 316 as well as nickel alloy
- Remote- or compact-mounted
- Available with broad range of transmitter FCT030, FCT010, and FCT070
- Solid performance with mass flow accuracy of 0.1% or 0.2% and density accuracy of down to 2 kg/m³
- Robust frame and housing isolates from external vibrations, creating an ideal measurement in difficult environment
- Ideal for the chemical, petrochemical and oil and gas industry

SITRANS FCS low flow
Single tube in sizes from DI 1.5 to DI 15, with a wide selection of available connections
- High-performance accuracy: 0.1% on massflow and down to 0.5 kg/m³ density
- Available with broad range of transmitter FCT030, FCT010, and FCT070
- DN 4 design withstands pressure rates up to 1000 bar
- Ideal for a broad range of low-flow applications within the automotive, chemicals, and food and beverage industries
- Easy installation using a plug and play interface
- Optimal hygiene, safety, and CIP cleanability for the food and beverage industry as well as pharmaceutical applications, thanks to single-tube construction without internal welds, reductions, or flow splitters

SITRANS FCS400
- Dual splitflow design in sizes DN 15 to DN 50
- Market's most compact design
- Available with all common process connections including a variety of sanitary common connections
- Available with broad range of transmitter FCT030, FCT010, and FCT070
- High-performance accuracy: 0.1% on massflow and down to 0.5 kg/m³ density
- Ideal for OEM, skids, machine builder, marine and sanitary applications

© Siemens 2020

SITRANS F M electromagnetic flowmeters

The task of an electromagnetic flowmeter from the SITRANS F M product family is to measure flow volume of electrically conducting fluids such as water, chemicals, food and beverage, slurries, sludge, paper stock, and mining slurries with magnetic particles.

Modular pulsed DC meters: SITRANS F M MAG (DN 2 to DN 2200)

- Full transmitter program includes MAG 5000/MAG 6000/MAG 6000 I; compact- or remote-mounted
- Multiple I/O as standard and communication modules PROFIBUS PA/DP
- DeviceNet, FOUNDATION Fieldbus, HART, and Modbus RTU are available
- MAG 5100 W sensor for water and wastewater applications
- MAG 3100 P sensor for process industries and the harsh requirements in the chemical industry
- MAG 3100 P as quick ship variant available
- MAG 3100/MAG 3100 HT sensor for general process industries
- MAG 1100/1100 HT sensor for general process industries
- MAG 1100 F sensor for food and beverage and pharmaceutical industries

Battery-operated water meters: MAG 8000/MAG 8000 CT (DN 25 to DN 1200)

- Battery lifetime up to 15 years*
- IP68 (NEMA 6P) enclosure and sensor painting in accordance with ISO 12944 class C4M corrosivity for burial and submerged applications
- Easy installation without straight inlet/outlet
- Rich add-on communication modules: Modbus RTU, encoder card, 3G/UMTS module

MAG 8000 with 3G/UMTS module

- Rich data transmission protocols supported by 3G module: SMS, secured e-mail, and secured FTP
- Built-in Remote Qualification Certificate enables comprehensive device diagnostics and off-site audits
- Configurable analog input for external ratiometric pressure transmitter in parallel with flow measurement (2-in-1 solution), or 4–20 mA alarm signal input for external tamper and flooding detector
- MAG 8000 clock synchronization with Internet NTP server featuring
- Adjustable time zone setting ensures measurement data is always accurately time-stamped
- Single SMS synchronizes the data transmission time for all MAG 8000 devices in field
- Real-time SMS notification for MAG 8000 alarms

*for 4 D-cell external battery pack

High-powered AC meters: TRANSMAG 2 / (DN 15 to DN 1000)

- Specially designed for heavy mining slurries with or without magnetic particles as well
- Also suitable for the most difficult applications in the pulp and paper industry
- Low conductive medias ≥1 µS/cm (0.1 µS/cm depending on medium)
- No movable parts
- Stable zero point/pulsed alternating field for accurate flow signal and excellent signal strength
- SmartPLUG concept
- Comprehensive self-diagnostics

Threaded SITRANS FM100: Making engineering and design even simpler NEW

- Measuring and monitoring small and medium flows. Robust stainless steel design (threaded: 1/2", 3/4", 1", 2")
- Generation of two process values, simultaneous flow and temperature measurement
- Dosing function with external control input
- Four optical buttons, easy local operation in the field with gloves possible
- The display can be electronically rotated in 90° steps
- Bidirectional measurement
- Integration in many standard applications possible, as there are two individually configurable outputs (pulse/frequency/ alarm and analog output)
- Total and partial volume counters to track flow rates
- IO-Link communication available

© Siemens 2020

SITRANS F S inline ultrasonic flowmeters

Our ultrasonic flowmeters deliver extremely accurate results for a wide range of conductivities, viscosities, temperatures, densities, and pressures. This makes them an optimal choice for measuring homogenous conductive and non-conductive liquids within a wide variety of process industry applications.

SITRANS F S SONO 3100/SONO 3300

- Suitable for water applications in sizes DN 50 to DN 500
- Available as 1- or 2-path systems in combination with SITRANS FUS060 transmitter
- Option between mild steel and stainless steel on request
- Sensors can be exchanged without interrupting operation

SITRANS F S SONOKIT

- The SONOKIT system is designed for inline retrofitting on existing water pipelines up to DN 1200 as a 1- or 2-track flowmeter
- For use with the dedicated SITRANS FUS060 transmitter (up to DN 500) or battery-powered FUS080 transmitter (up to DN 1200)
- The unique design enables installation on empty pipes or pipes under pressure without process shutdown
- Robust version can be buried and withstands constant flooding
- Outstanding accuracy; the bigger the pipe, the more accurate the result

SITRANS FUS380 and FUE380

- For the utility industry, the 2-track FUS380 and FUE380 are designed to measure water flow in district heating plants, local networks, boiler stations, substations, and other general water applications
- Also suitable for chiller plants (including glycol mixes without type approval)
- Custody transfer approvals for district heating custody transfer applications (MID MI-004). Sizes range from DN 50 to DN 1200
- Battery or mains power enables installation where needed. Battery lifetime up to 6 years
- Ideal for energy metering together with the SITRANS FUE950 energy calculator
- With heatmeter type approval (MID MI-004)

© Siemens 2020

SITRANS F S clamp-on ultrasonic flowmeters

The externally mounted sensors of SITRANS F S clamp-on ultrasonic flowmeters are quickly and easily installed on the outside of a pipe, making them the perfect choice for existing applications or where corrosive, toxic, or high-pressure fluids rule out the option of cutting the pipe. The cost-efficient technology provides highly accurate measurement of liquids in pipes ranging from DN 6 to DN 10000 in size.

SITRANS FS230

- Digitally based system featuring market-leading accuracy of 0.5% to 1% of flow rate
- Best-in-class 100 Hz data update rate reliably detects even the smallest changes in flow
- WideBeam® transit-time technology allows for measurement of virtually any liquid, even those with high levels of aeration or suspended solids
- Large graphical display with intuitive navigation, multiple setup wizards and patented pipe configuration menu
- SensorFlash® microSD card stores all operational data for easy device transfer and servicing
- Application examples include raw and potable water, effluent, district heating and cooling, hydroelectricity, and nuclear feed water

SITRANS FS220

- Cost-efficient system offering the most commonly required measurement functions
- Consistently high accuracy of 1% of flow rate and 0.25% repeatability in accordance with ISO 11631
- Enhanced zero stability results in minimal need to set a zero point
- WideBeam® transit-time technology allows for measurement of virtually any liquid, even those with high levels of aeration or suspended solids
- Large graphical display with intuitive navigation, multiple setup wizards and patented pipe configuration menu
- SensorFlash® microSD card stores all operational data for easy device transfer and servicing
- Suitable for multiple sectors requiring budget-conscious liquid flow instrumentation, including water and wastewater, power, HVAC, and chemical industries

SITRANS FP differential pressure flow measurement

The SITRANS FP product line offers a complete solution for differential pressure flow measurements. SITRANS FP330 as well as the SITRANS FPS230 both are suitable for a vast range of different applications under various process conditions and parameters

SITRANS FPS230/FP330 NEW

- Flexible mounting
- One pressure transmitter for all applications
- Single source supplier for the hole measuring point
- Pre-mounted flowmeter delivered in “one box”
- Easy traceability throughout the ordering process
- Direct technical feedback and possibility to order

Differential pressure flowmeters: SITRANS F O

- Universal flow measurement for liquids, gases, and vapors
- Always provide accurate results even with large bores, high temperature and extreme pressure

SITRANS FX330

- Accurate measurement of steam, gas, and both conductive and non-conductive liquids
- Available in sizes DN 15 to DN 300 mm
- Integrated pressure and temperature compensation for lower installation costs and increased accuracy
- Integrated reduction of nominal diameter results in a large turndown ratio, reducing installation costs and potential for leakage
- Provides redundant storage of all calibration and configuration data within the display memory and the electronics module
- Designed from the ground up to be fully compliant with the IEC 61508 SIL 2 safety standard
- Cost-efficient energy calculation including net heat measurement
- Remote version available with cable length up to 50 m

© Siemens 2020

Always on the level

Indispensable in numerous applications in the process industries: Whether point level detection or continuous level measurement, our comprehensive offering has the right solution for your application.

SITRANS LR100 series – NEW
for hassle-free level measurement

- Compact 80 GHz radar transmitter for liquids and solids applications
- Featuring Bluetooth® wireless technology for easy and quick setup with Siemens SITRANS mobile IQ App
- Ideal for chemical storage vessels, bulk solids hoppers, produced water, and drilling mud

© Siemens 2020

Continuous level measurement

Continuous level measurement constantly monitors dynamic processes. The measurements are transmitted as an analog signal or digital value. We offer a wide range of transmitters based on a variety of technologies, including ultrasonic, radar, guided wave radar, capacitance, gravimetric, and hydrostatic.

Process intelligence

The signal processing technologies differentiate between the true echo from the material and false echoes from obstructions or electrical noise. The sophisticated software is supported by field data gained from more than a million applications. This in-depth knowledge and experience is built into the software's advanced algorithms to provide intelligent processing of echo profiles. The result is a repeatable, fast, and reliable measurement.

Radar level measurement with intelligent signal processing

- Non-contacting and low-maintenance
- Microwaves require no carrier medium for precise measurements even under harsh process conditions
- High performance and easy implementation using just a few parameter entries

SITRANS LR560 –

The world's first 78 GHz level transmitter

- 2-wire, 78 GHz FMCW for ranges up to 100 m (328 ft)
- Very narrow 4-degree beam angle with 3" lens antenna
- Aiming flanges with purge, easy to install
- Process Intelligence integrated and plug and play performance

SITRANS LR250

- 2-wire, 25 GHz pulse radar level transmitter up to a range of 20 m
- For liquids and slurries in storage and process vessels with high temperatures and pressures
- Horns, FEA, HEA and PLA antenna options offer versatility on field applications

SITRANS LR200

- 2-wire, 6 GHz pulse radar level transmitter for liquids with a range of up to 20 m
- Ideal for process vessels with turbulence and heavy deposit, as well as with high temperatures and pressures with a range of up to 20 m

© Siemens 2020

Ultrasonic level measurement
Our market-leading ultrasonic level measurement is an extremely cost-effective solution. The self-cleaning face makes it suitable for harsh environmental conditions. The non-contacting technology is used in numerous industries to monitor liquids, bulk solids, and slurries.

SITRANS Probe LU240
Cost-effective, compact, intelligent level solution for liquid chemical inventory, monitoring small process vessels, and level monitoring measurement in the environmental industry.

Level controllers
Our product portfolio of level controllers feature intuitive navigation via the local user interface and are ideal for applications in all industries. Whether you need the world's highest accuracy in your open channels, rugged wet well pump control, or dual point monitoring, Siemens ultrasonics has you covered.

Echomax transducers
- Fully encapsulated robust ultrasonic transducers for use with Siemens ultrasonic controllers
- Various approvals for use in hazardous applications
- Self-cleaning face for harsh applications with buildup

Continuous capacitance
Our unique inverse frequency shift approach to capacitance technology ensures accurate, reliable, and repeatable measurements, even in dusty, turbulent, and vaporous environments or in situations with product buildup. Because even a small level change creates a large change in frequency, our instruments provide better resolution and consistently outperform conventional devices. With special features such as Active-Shield technology, they protect the measurement from the effects of moisture, vapors, foam, temperature and pressure variations, and buildup. Together with the modular probe options available on various models, they offer practical solutions to a wide variety of continuous level and interface applications.

SITRANS LC300 NEW
- Ideal for standard and industrial applications in the chemicals, hydrocarbon processing, food and beverage, mining, aggregate, and cement industries

© Siemens 2020

Guided wave radar

SITRANS LG guided wave radar transmitter for a range of contact level and interface applications from general to harsh conditions and everything in between. Little to no configuration, you'll be operational in minutes, saving you time and money.

Extreme process conditions don't stand a chance, and these transmitters feature SIL options for applications requiring functional safety. Advanced diagnostics including trending, profiles, and event logging give you the data you need at every step of your process. Rapid response times and advanced echo processing deliver accurate and reliable readings over the full application range, even in small containers and in low dielectric constant material. And with field-replaceable and adjustable probes, if your process changes, your measurement device can, too.

SITRANS LG series

SITRANS LG240

- For use in hygienic and corrosive applications

SITRANS LG250

- Highly flexible solution for liquid level and interface applications. Extremely versatile for many applications

SITRANS LG260

- Ideal for measuring the level in medium-range solids applications, including grains, plastics, and cement

SITRANS LG270

- Offers configuration options for extreme conditions, including high-temperature and high-pressure applications

All versions include:

- Automatic buildup adjustment
- Remote display and electronics options
- 2 mm accuracy
- Backlight with full graphic display, top- or side-mountable
- SIL 2/3 approval options
- Field-replaceable probes
- Quick setup wizards
- USB service port option

© Siemens 2020

Hydrostatic
Low-cost level measurement for direct mounting or mounting with remote seals on tanks and vessels

SITRANS LH100 and SITRANS P DS III
- Suitable for a wide range of applications in the chemical and petrochemical industries
- Highly resistant to extreme chemical and mechanical loads as well as electromagnetic interference

Gravimetric (see catalog WT 10)
Gravimetric level measurement with SIWAREX weighing technology offers highly precise measurement without material contact independent of medium temperature, tank shape, built-in parts, or material characteristics.

SIWAREX WP321 (see catalog WT 10)
- Technology module for the SIMATIC ET 200SP distributed I/O system
- For level measurements in silos and bunkers; convenient and seamless integration of platform scales directly into the automation environment

Point level detection
We offer you a comprehensive portfolio for extremely reliable and precise point level detection. Our wide selection includes ultrasonic, rotating, and vibrating level switches as well as RF capacitance switches with inverse frequency shift technology that are cost-effective and suitable for point level, interface detection, dry run, and safety back-up applications including bulk solids, liquids, and slurries.

Vibrating, rotary paddle
- Especially suitable for low bulk density applications
- Ideal for use in harsh and abrasive environments, thanks to their rugged design
- For detecting high, low, and demand levels in solids, liquids, and slurry applications
- A wide variety of configuration options makes them suitable for any environment
- Simple to use with no complicated setup or configuration
- Stainless steel, aluminum, and plastic enclosure options and high-grade steel process connections provide exceptional resistance to mechanical forces, a long service life, and low cost of ownership
- Options for SIL 2 / redundant SIL 3

SITRANS LPS200
- Rotary paddle switch that detects solids with densities as low as 15 g/l
- Motor protection
- SIL 2 certification for best-in-class reliability and performance
- Options for fail-safe rotation monitoring and alarming

SITRANS LVL100 and LVL200
- Vibrating level switches for liquid and slurry applications, including high, low, and demand level alarms and pump protection
- Wide application range including high temperatures and pressures, hygienic versions, large variety of enclosure materials, SIL 2/redundant SIL 3 options and remote testing

© Siemens 2020

SITRANS LVS100, LVS200 and LVS300

- Vibrating level switches that detect solids with densities as low as 5 g/l
- Best-in-class sensitivity detection
- Ability to handle and monitor buildup
- Options to detect solids interface within a liquid

Pointek ULS200 Ultrasonic

- Non-contacting ultrasonic level switch with two switch points
- Ideal for sticky materials and an effective solution for bulk solids, liquids, and slurries

RF Capacitance

Pointek RF capacitance point level switches measure interfaces, solids, liquids, slurries, and foam. The inverse frequency shift technology provides accurate and reliable measurement results even in dusty, turbulent, and vaporous environments or in applications with product buildup. Small changes in level create large changes in frequency. Consequently, Pointek devices have greater sensitivity and consistently outperform conventional devices. With their rugged aluminum or chemically resistive plastic enclosures and wide variety of process connections, Siemens Pointek switches are compatible with most applications.

Pointek CLS100

- Suitable for level detection in constricted spaces
- Sensguard protection of probe for harsh and abrasive environments and chemically resistive probe types available
- Compact 2-wire or 4-wire switch

Pointek CLS200 and CLS300

- Suitable for level detection in demanding conditions with high pressures and temperatures
- Suitable for aggressive applications including very high temperatures and pressures
- SIL 2 options
- Smart PROFIBUS versions with digital display
- Remote operation via PROFIBUS for status and function testing
- Remote detection of buildup and monitoring of other process condition changes

© Siemens 2020

Always in pole position: SIPART Positioners

As the interface between control system and valves, positioners play an important role in ensuring reliability and optimal performance in process plants around the world. Our proven portfolio with the SIPART PS2 precisely controls the entire range of valves and masters even special tasks with absolute reliability. In addition, we have now introduced our new SIPART PS100 – to precisely meet your application requirements.

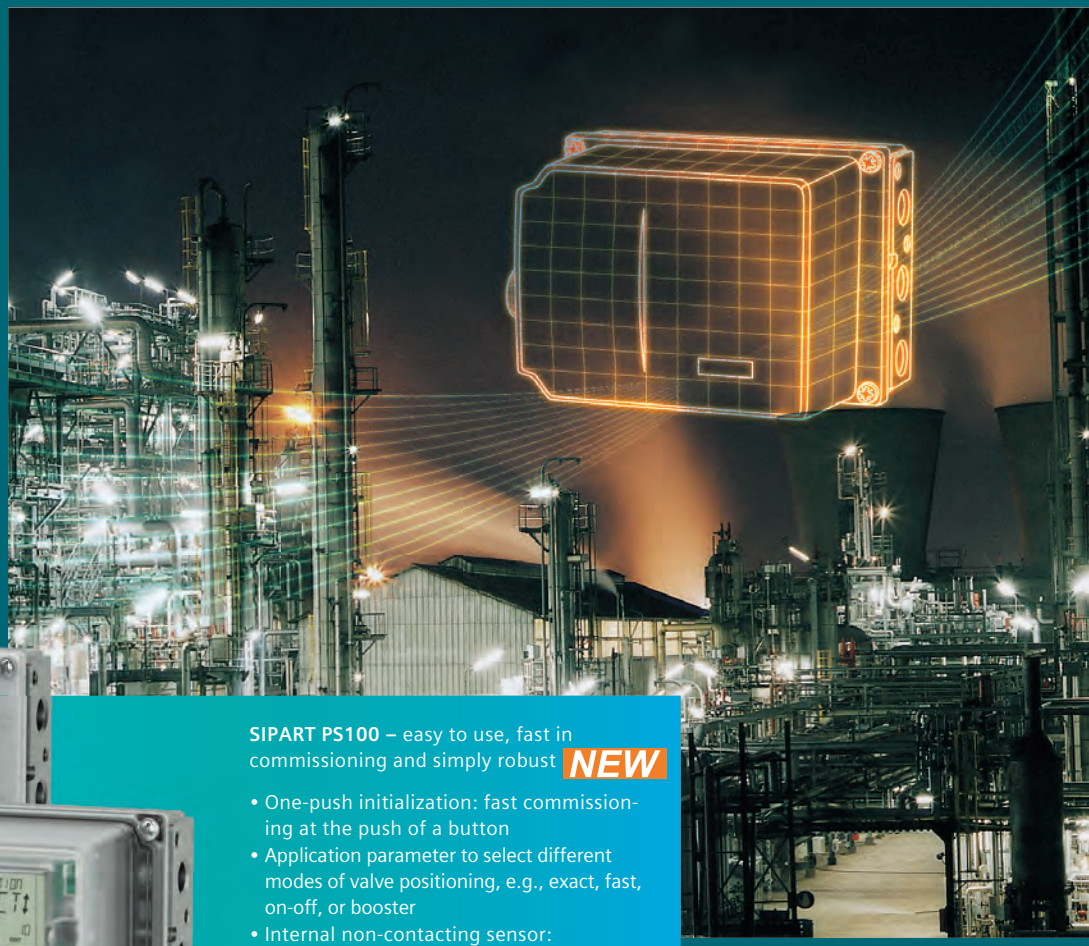

SIPART PS100 – easy to use, fast in commissioning and simply robust **NEW**

- One-push initialization: fast commissioning at the push of a button
- Application parameter to select different modes of valve positioning, e.g., exact, fast, on-off, or booster
- Internal non-contacting sensor: non-wearing and vibration-resistant
- Non-corrosive sound absorber for use in harsh environments
- Plain-text display with status icons in accordance with NAMUR NE107 and four operation buttons

© Siemens 2020

SIPART PS2 – the all-around positioner

The SIPART PS2 has grown to become the most widely used positioner for linear and part-turn actuators. It is constructed to meet a wide variety of requirements:

- Polycarbonate, aluminum, or stainless steel enclosure
- 316L stainless steel enclosure for nearshore, offshore as well as oil and gas applications in hazardous areas
- Ex d explosion-proof version
- Communication via PROFIBUS PA, FOUNDATION Fieldbus, or HART
- Integrated booster option for quick control of large drives
- Low operating costs thanks to minimal air consumption

SIPART PS2 – more functions, more possibilities

The SIPART PS2 comes with an extensive range of functions and diagnostic capabilities, which we improved even further:

- Optional pressure sensors: improved valve diagnostics and parameter monitoring
- Ready for digitalization: Fast and predictive determination of valve maintenance requirements using the valve monitoring app
- Regular partial stroke tests: ensured movement of emergency shutdown (ESD) valves and other open/close valves in the event of an emergency
- Fail in Place: the valve remains in its last position upon loss of electrical and/or pneumatic power
- Fail Safe: the valve moves to the safety position; also suitable for SIL2 applications
- Valve perfomance tests (VPT): immediate, on-site assessment of valve maintenance requirements

Positioner with remote control electronics

- Suitable for use in environmental conditions with high-energy radiation

Positioner with various external position transmitters

- Easier access to positioner for valves at not easily accessible locations

© Siemens 2020

Early detection protects your process

Process protection devices can be used as early-warning systems to avoid costly interruptions and breakdowns of equipment. They detect flow problems, blockages, screen faults, machinery slowdowns, or burst filter bags. Their rugged construction makes them impervious to dust, dirt, buildup, and moisture.

SITRANS AS100 – acoustic sensor used for solids flow detection, featuring a compact, stainless steel construction for harsh environments and non-invasive mounting

- Detection of high-frequency acoustic emissions from friction or the impact of dust, powders, granulates, and other solids
- Signaling of flow/no flow or high/low flow
- Compatible with SITRANS CU02, which processes signals from the sensor
- Provision of relay and analog outputs for connection into a process, or direct connection to a PLC analog output

© Siemens 2020

Acoustic sensors

Non-invasive acoustic sensors detect inaudible, high-frequency acoustic emissions generated by friction and impact, caused by materials in motion.

SITRANS DA400

- Acoustic analyzer for the condition monitoring of oscillating displacement pumps
- Simultaneous and continuous monitoring of up to four independent delivery valves
- Easy system operation and configuration either locally by LCD and keyboard or via PROFIBUS DP/PA

Motion sensors

Non-contacting motion sensors detect changes in motion and speed of conveying, reciprocating, and rotating machinery.

SITRANS WM300 MFA NEW

- Motion failure alarm (MFA), differential speed detection (DSD), and non-contacting tachometer (NCT)
- Multiple alarming powered by 4 relays for overspeed or underspeed conditions from the sensors
- Intuitive programming thanks to a simple menu structure, along with an on-board display and push buttons

Milltronics MFA 4p

- Plant protection through the detection of absence of motion, as well as underspeed or overspeed conditions
- Probes usable in hazardous, high-temperature, and harsh conditions, thanks to their superior design
- With MSP or XPP probes

SITRANS WM100

- For detecting the absence or presence of motion of rotating, reciprocating, and conveying equipment
- Heavy-duty alarm switch

Process controllers

(see catalog MP 31)

SIPART DR controllers are outstanding thanks to their extreme reliability and ease of use. Various software packages are available to make their handling easy and intuitive and to extend their scope of application. The standard version already offers comprehensive controller hardware that can be upgraded quickly and easily for specific applications by means of a large number of optional input and output modules. Plug-in modules for communications over RS 232/RS 485 or PROFIBUS DP are also available.

Process recorders

(see catalog MP 20)

SIREC D200, 300, and 400 display recorders are used for continuous monitoring of process quantities, plant maintenance, process optimization, or troubleshooting. Our complete range of process recorders offers state-of-the-art solutions for the most demanding requirements.

© Siemens 2020

Expand as you go

Integrated communication down to the field level is becoming an increasingly important factor for the success of our customers. Availability of the instruments in automation solutions at all times is necessary to gather information about the state of the plant from existing data, and to derive the correct maintenance measures with regard to time and scope. This is not a problem with our modern solutions. Even proven plants that have been running for many years can be expanded with a small investment in such a way that the most important data is available – not only locally, but with secure worldwide access if required.

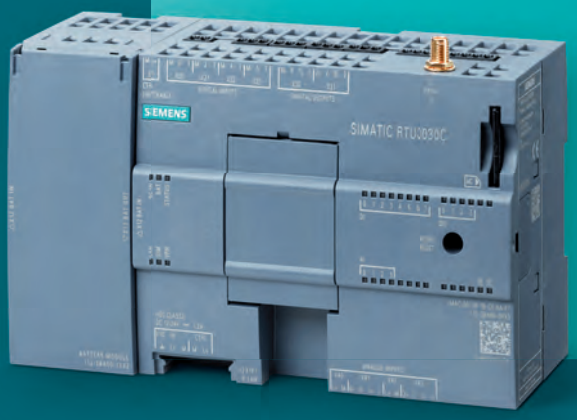

SIMATIC 3010C/RTU3030C – The compact remote terminal units monitor remote measuring points, even in locations where no power supply exists.

- Easy configuration using a web browser instead of programming
- Flexible power supply from batteries, solar energy, or 24 V DC
- Energy-optimized operation and integrated energy management for connected analog and digital sensors
- Secure communication (TeleControl Basic protocol, SINAUT ST7, DNP3, and IEC 60870-5-104) via the integrated UMTS modem (RTU3030C) or via LAN port (RTU3010C) in addition to a SCALANCE S or SCALANCE M
- Extended temperature range from –40 °C to +70 °C as well as an optional enclosure meeting the IP68 standard

© Siemens 2020

SITRANS RD150 NEW

- Remote display for 4 to 20 mA and HART devices
- Easy-to-use basic configuration of HART instruments using HART commands
- Ease of use through the backlit 4-button menu-driven display and flexible mounting options

WirelessHART components

WirelessHART enables the integration of measuring points that could not be implemented before due to the operating environment or for economic reasons. In addition to the SITRANS TF280 transmitters for temperature measurement and SITRANS P280 for pressure measurement, the SITRANS AW210 and SITRANS AW200 WirelessHART adapters integrate instruments with HART capability as well as analog devices that do not support HART communication. Access to diagnostic data can be implemented with these adapters at low costs in most cases, especially when the control system does not support integrated HART communication.

Remote digital display

The universal remote digital displays allow remote display of and access to measurement data from a convenient location. Our advanced range of remote displays include options for pump control with communications including HART and Modbus RTU with flexible output options.

SITRANS RD100

- Loop-powered display
- Suitable for level, flow, pressure, temperature, and weighing applications
- Can be used in a large variety of environments (low/high temperatures, hazardous areas)
- Simple setup and installation

SITRANS RD200 and RD300

- Universal and full-featured versions
- Ideal for flow rate, total, and control applications as well as for use with most field devices
- Data logged and displayed on the PC with the free RD software
- Sunlight-readable display
- Standard serial communications output (Modbus RTU)
- Pump alternation control, linearization and square root and math functions

SITRANS AW200

- Connection option of up to four HART devices in multi-drop mode
- Support of 4–20 mA devices without HART
- Power supply of the connected field device via an integrated battery

IE/PB Link PN IO

- Can constitute the gateway between PROFINET and PROFIBUS
- From the IO-controller viewpoint, all DP slaves are treated like IO devices with a PROFINET interface
- Use as a data records router for the parameter assignment of field devices via SIMATIC PDM (Process Device Manager) in all plants with PROFIBUS DP

© Siemens 2020

Digitalize your process

From design and commissioning to operations and performance monitoring – Siemens provides the software, tools, and services for the digitalization of every phase of a plant's lifecycle. End-to-end digitalization from a single source optimizes plant operations to reduce downtime and maximize cost efficiency.

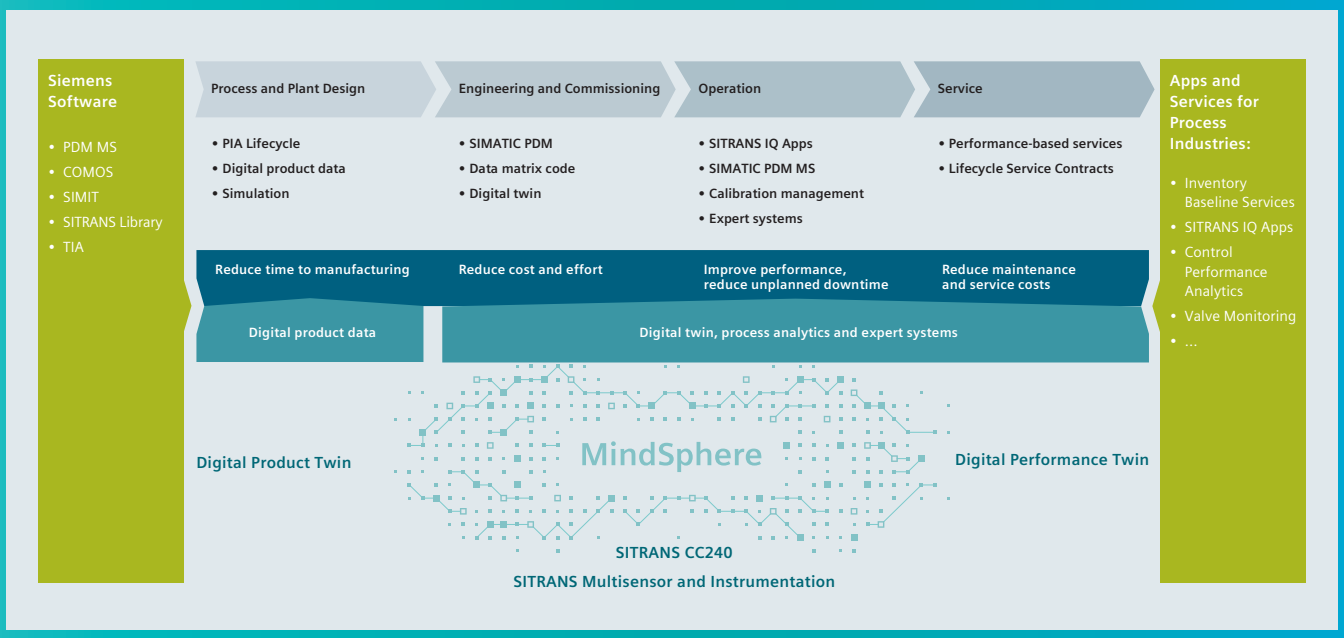

Siemens supports your digitalization over the entire lifecycle
During each of the main steps of the lifecycle of a plant, Siemens supports you with a set of software tools, apps, and services in order to improve the uptime and performance of your plant while reducing your maintenance and service costs.

Process and plant design
In order to support you while designing the plant, Siemens Instrumentation provides you with ample information via its PIA Portal (www.pia-portal.automation.siemens.com). When using engineering tools like COMOS, all digital product data can be imported directly. And if you are using SIMIT to train your staff, the process instrumentation is certainly included with simulation objects.

© Siemens 2020

Engineering

When using state-of-the-art process automation like PCS 7, engineering is made easy with the SIMATIC PCS 7 Industry Library and especially the SITRANS Library for Field Instruments. Here, the faceplates provide the full potential of the instrumentation.

Commissioning and operation

New plants usually have communication down to the field level with HART, PROFIBUS, or PROFINET, ensuring transparency of secondary data of the field devices. Stand-alone or integrated parameterization tools like SIMATIC PDM are able to access or forward this data for further processing in apps, with no disruption to plant operations. They allow an upload or download of parameter assignments during commissioning of field devices based on an always-synchronized, central database and known network topology.

Service

In the future, monitoring of plant assets via Siemens Apps, such as SITRANS SAM IQ – Smart Asset Management, will allow the plant operator to pinpoint service needs and to make plant maintenance more efficient, thus reducing costs and increasing uptime. In addition, many support services are available, such as QR codes on each PI device, which allow you to easily download the specific information of an instrument on site.

Contact our experts directly for assistance with data troubleshooting and other services.

© Siemens 2020

Online support for customers with SIOS and the industry support app

Access to accurate information is a huge asset in the field. Siemens Industry Online Support (SIOS) provides up-to-date information about specific products quickly and easily. Available in the online portal or in the downloadable smartphone app for maximum convenience.

SIOS Portal

24 hrs a day, 365 days a year – this portal provides comprehensive information on the entire portfolio of Siemens for process and discrete industries. Find information on automation, communication, and process instrumentation under:

- Product support: handbooks, manuals, FAQ, product notes, certificates
- Services: the service portfolio
- Support request: help – just state your issue and we will contact you within 4 working hours
- My support: activate notifications according to your needs

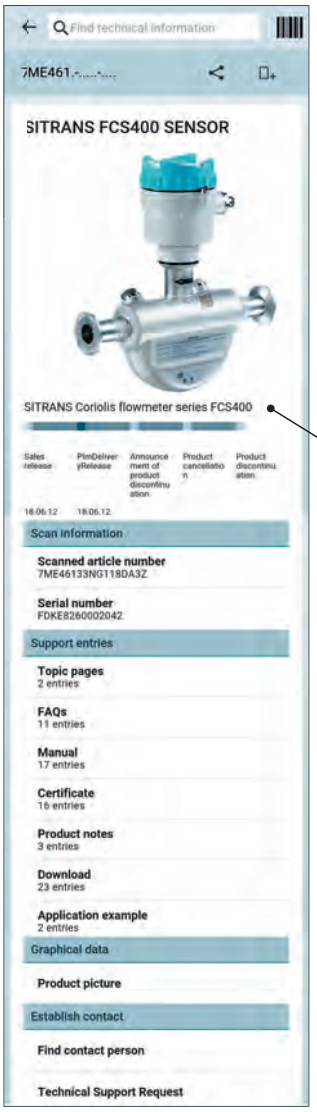

Industry Support App

- Download and install the app on your smartphone
- Scan the QR code of any device in the field
- Access comprehensive information including device-specific information like handbooks, Manuals, FAQ, product notes
- Submit a support request and we will contact you within 4 working hours (even quicker with a premium service contact)

© Siemens 2020

Integrated tools for engineering efficiency

Empower your data! Clever, integrated tools and solutions such as COMOS and SIMIT let you take control – and greatly increase the efficiency of processing and manufacturing plants.

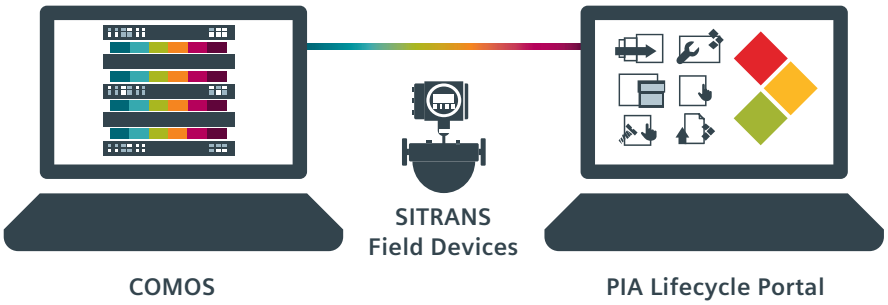

SIMIT

The simulation platform SIMIT enables comprehensive tests of automation applications and provides a realistic training environment for operators even before the real startup. This creates opportunities for process optimization and know-how retention which results in reduced commissioning time and significantly shortened time-to-market.

PIA Lifecycle Portal

This portal helps you select, size and configure your ideal piece of instrumentation.

Interfaces to COMOS and exports to the online ordering portal of Siemens: the Industry Mall (mall.industry.siemens.com)

You are able to track the lifecycle of your instrument, see warranty and extended exchange option information as well additional information such as factory certificates (e.g., for calibration or validation).

COMOS

COMOS is the engineering tool from Siemens for the entire lifecycle of your plant. With the direct integration of our PIA Lifecycle Portal we guarantee the seamless integration of our field devices in the engineering environment. We can offer field devices best suited to your processes, properties, and measuring requirements.

SITRANS Library

- Easy use of device-specific functions and data from devices of the SITRANS and SIPART product families, such as dosing or totalizer functions in solutions with SIMATIC PCS 7
- Library with device-specific function blocks, block symbols, and faceplates
- Fully compatible with SIMATIC PCS 7 Standard Advanced Process Library (APL) through the entire lifecycle, from engineering to running of the plant

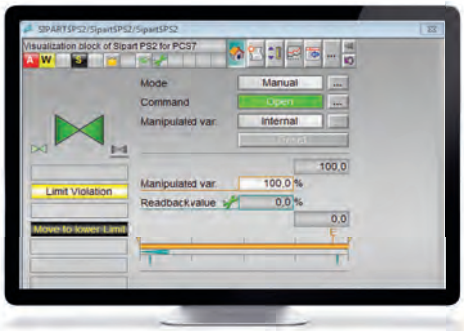

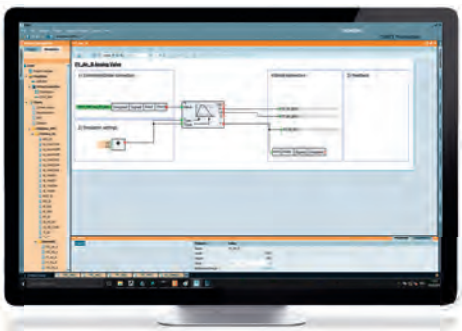

© Siemens 2020

SITRANS IQ NEW

Our digital field device platform for performance, efficiency, and less downtime across the lifecycle

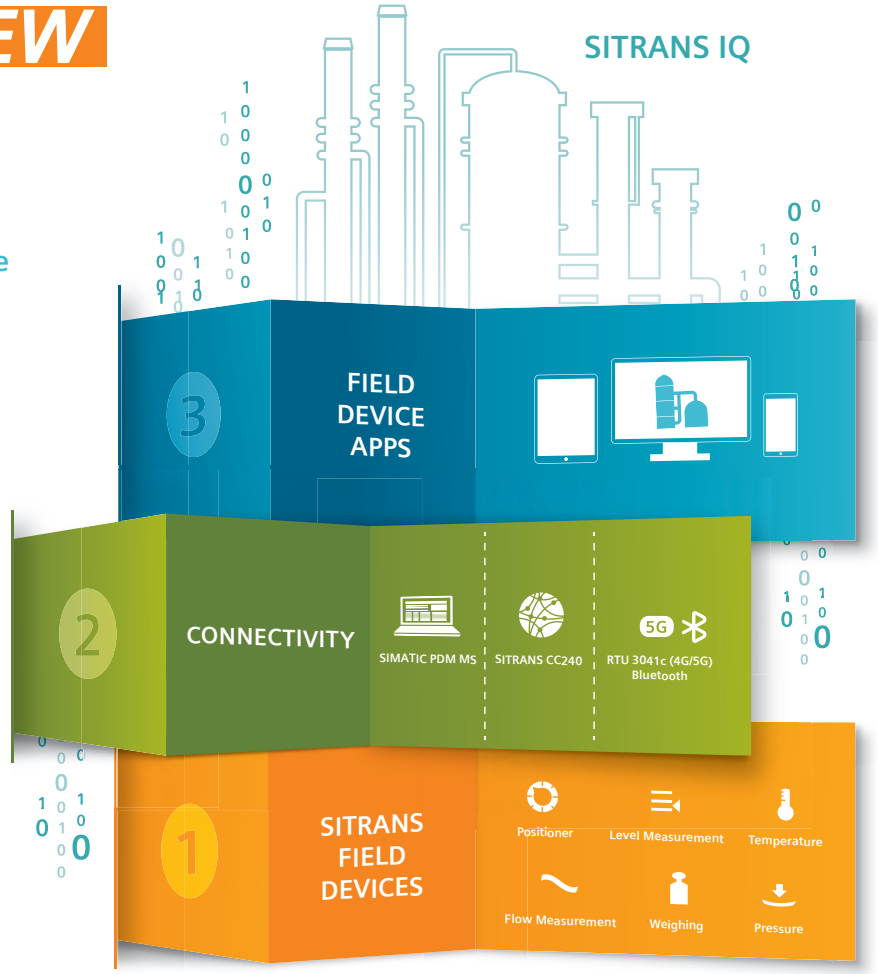

SITRANS field devices

The full portfolio of flow, temperature, pressure and level, as well as weighing and pneumatic valve positioners is well established in many industries. Reliable and accurate, they measure the primary measurement value and often provide secondary data which allows you to assess e.g. the status of a valve.

Multisensors will in future also detect additional non-cyclic information like vibration, temperature or magnetism, for example. Some instruments such as the MAG 8000 even send their data directly using mobile networks.

Connectivity down to the field devices is not given in the majority of the brownfield plants. Therefore connectivity elements will allow you to access the stranded data below to the classic, non-transparent I/O modules of older automation systems. SITRANS CC240 will in future allow to access these stranded HART data.

And last but not least, the Remote Terminal Unit RTU3041c will collect measurement data from highly distributed remote measurements and send it via encrypted e-mail to a SITRANS serve IQ – that forwards the collected measurement data into SCADA Systems or APPs.

SITRANS IQ Apps

Data connectivity via SIMATIC PDM Maintenance Station or SITRANS CC240 allows you to collect stranded data from the field. But deriving value from the data, recognizing patterns or even predict potential failures is a challenge.

With co-creating customers, Siemens is developing apps that support you in monitoring your plant. These apps provide life lists, inform you when devices have been changed. They visualize patterns, monitor limits (e.g. wear), and much more.

Digital Services

If the app detects an issue, an expert is easily available to support you. They are ready to remotely analyze the data together with your plant operators and service staff. And if requested, they are ready to support you with further services.

© Siemens 2020

NAMUR Open Architecture will enable new business cases in MRO applications

The open architecture and second communication channel allow innovative solutions for new and existing plants to be implemented quickly while leaving the process control core unaffected.

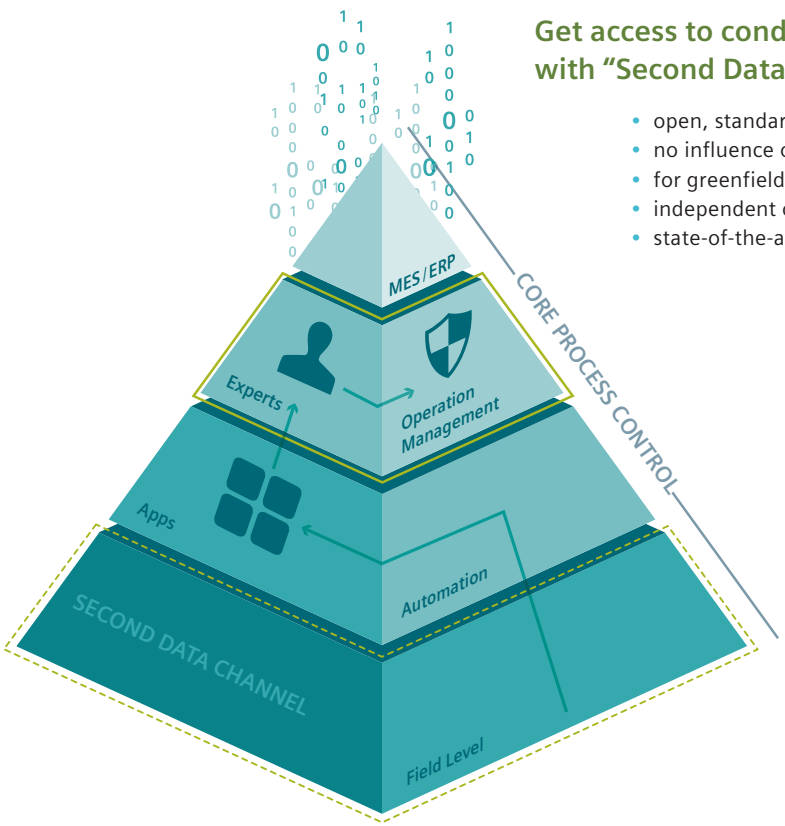

Get access to condition data with "Second Data Channel"

- open, standard communication
- no influence on core process
- for greenfield and brownfield
- independent of DCS lifecycle
- state-of-the-art security

Process instrumentation as part of core process control

The instrumentation is the source of all information to run your plant efficiently and safely. Instruments are your eyes and ears in the plant. To bring this information to the automation systems, PI runs on many different communication standards, from very cost-effective 4-to-20mA-only devices, to HART communication, PROFIBUS and in future also PROFINET devices.

Process instrumentation as part of monitoring and optimization

The core process instrumentation measures the critical values to run your application like e.g. flow, temperature, pressure, level. But also their secondary KPIs contain valuable information on e.g. the degradation of valves or temperatures of the transmitter electronics.

Multisensors as part of the monitoring and optimization

The multisensors measure indirect values such as vibration, and other. They usually monitor the state of selected assets and are outside the core automation pyramid. By recognizing deviations of the machines, valves, and the plant itself in daily operation, multisensors are able to predict potential failures or necessary maintenance of the plant in time. This leads to better planning of the maintenance process and a reduction in unplanned shutdowns.

Information model and security

It is absolutely essential, while collecting data from the plant, that the automation and process control remain untouched. The security must be incorporated by design. Likewise, any insights and possible optimization measures are reviewed by experts and the plant operator, before being fed back into the automation – it is always the plant operator who is in control.

Apps

Siemens is developing its apps within the framework of Digitalization Enterprise Labs, ensuring a consistent framework of state-of-the-art functionality for all Siemens apps.

As our automation works seamlessly with all instrumentation available on the market, apps like Valve Monitoring and SITRANS SAM IQ – Smart Asset Management cover your entire installed base (though we would prefer, you would choose Siemens in the first place).

© Siemens 2020

Our services support you

To thrive in today's competitive markets, industrial companies must extract maximum value from their assets. Our extensive range of services provide customers with the tools and knowledge they need to minimize lifecycle costs while increasing performance. Thanks to our dedicated service people all around the world, we can deliver the services you need tailored to the individual challenges of your industry.

The Industry Services portfolio includes corrective, preventive, predictive services – as well as Digital Industry Services – through the entire lifecycle of products, machines, and plants. Whether making system states transparent or reliably monitoring machines and plants while also protecting them with security concepts, Siemens Industry Services enables your machines and plants to perform at their best.

© Siemens 2020

Industry Services for process instrumentation

In the process industries, communication with field devices is key to managing costs while ensuring safety, security, and quality. The comprehensive and modular range of Industry Services for Process Instrumentation from Siemens provides valuable tools for optimizing operations and protecting the long-term viability of your plant.

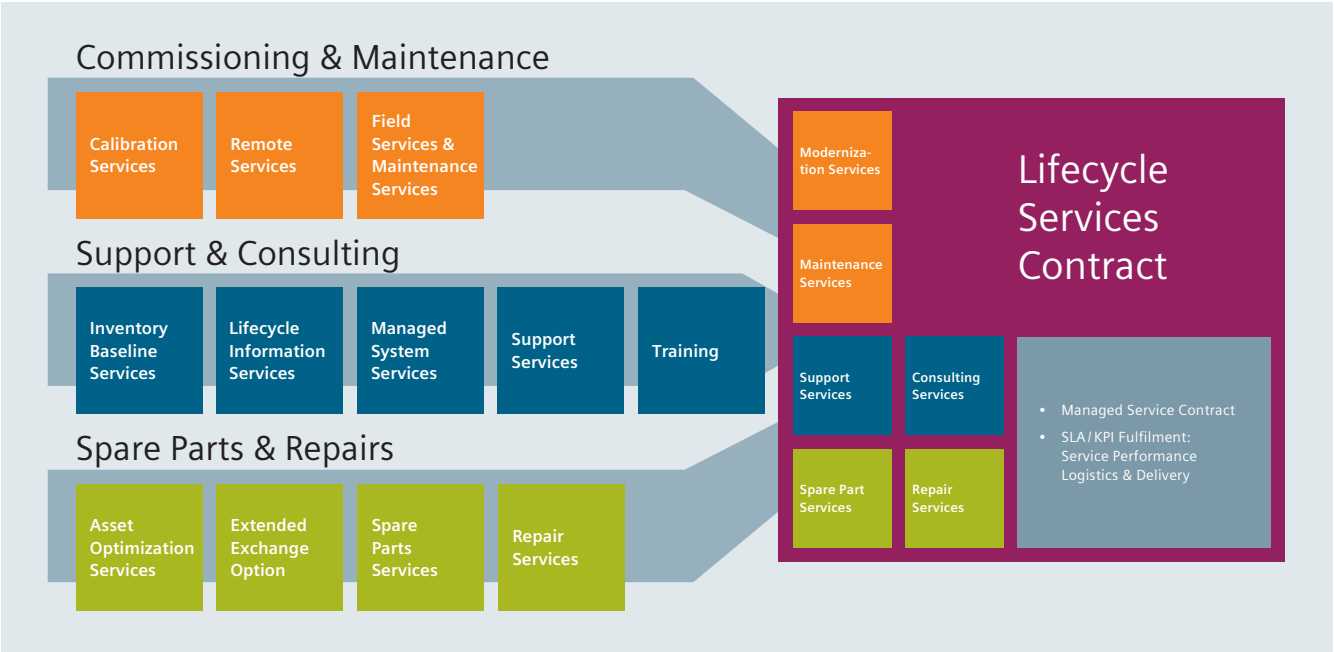

Commissioning and maintenance

Commissioning and maintaining field instruments is time-consuming, labor-intensive, and – depending on whether it's performed inside or outside explosion-risk zones – involves a substantial outlay. In addition, the ever-growing demands for IT security play an increasingly important role. Our range of on-site services, platform-based remote services, and comprehensive calibration services support you in all your activities, from engineering and commissioning to maintenance.

Support and consulting

Siemens' Inventory Baseline Services and Lifecycle Information Services provide convenient and powerful portfolio elements for your installed base. We offer a comprehensive training program for design, operation and maintenance personnel that can take place either at the Siemens Training Center or on your premises. Managed System Services are focused on the efficient, centrally coordinated processing of complex support requests. They not only make all service and support activities transparent, they also significantly reduce service time.

Spare parts and repairs

Asset Optimization Services take a structured, systematic approach to the comprehensive optimization of your supply of spare parts. With the Extended Exchange Option, you can protect any Siemens process instrumentation products you order from unforeseeable repair costs.

Lifecycle services contracts

A modular lifecycle services contract is composed of defined service elements and contract-specific parameters. Long-term investment protection and the assurance of serviceability are the essential benefits of a contract solution.

© Siemens 2020

Remotely assisted by experts – in real time and wherever you are

Our Remote Services for Process Instrumentation ensure optimal reactive support for all the field devices used. Remote access is via Siemens' own IT infrastructure (cRSP = common Remote Service Platform). Our offering guarantees smooth commissioning, rapid trouble-shooting, and comprehensive consulting related to your field devices, control loops, and plant.

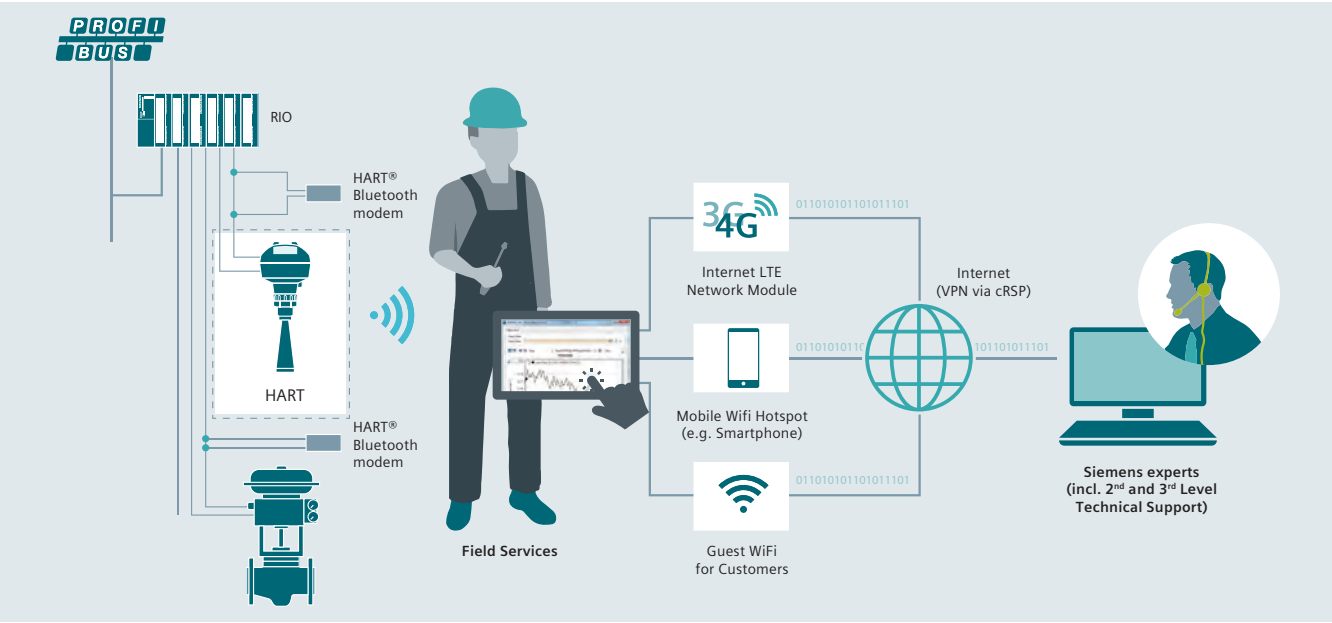

Maintenance

- Maintenance is generally covered by inspection and maintenance services according to DIN 31051:
  - such as inspecting the field instrument's condition for a transparent view of the system status and implementation of preventive measures

Parameterization

- SIMATIC Process Device Manager
- Professional software for parameter assignment, visualization, or error tracing for every kind of instrumentation – either from Siemens or any other supplier
- The same usability – no matter whether you access the device on site or remotely from the engineering station
- In use worldwide for more than a decade

Commisioning

- Service Tablet PC SIPIX SD
- Siemens common Remote Service Platform (cRSP)
- High-performance industry tablet PCs
- Designed for use in harsh industrial environments
- ATEX approval for Zone 1 and Zone 2
- Configured with all necessary service applications, for Siemens and all common foreign devices
- Access via HART Bluetooth Modem or HART USB cable
- A graduated security and access concept, secure and monitored communication
- Absence of feedback effects thanks to the separation of the different networks (DMZ). Compatibility with general industrial security concepts, certification under ISO 27001 / CERT

Your benefit

- Reliable access to your process instrumentation
- Safe access either at the device directly or from the first remote I/O
- Fast and worldwide availability of expert know-how directly from the product manufacturer
- Technical assistance also during the configuration, commissioning, and maintenance phases

© Siemens 2020

Approved and certified partners – near you

Siemens partners stand for proven expertise and excellent customer support. The companies we accept as partners have proven their capabilities and been certified in accordance with rigorous standards. At the same time, we support our partners with the same criteria we apply to the training of our own employees.

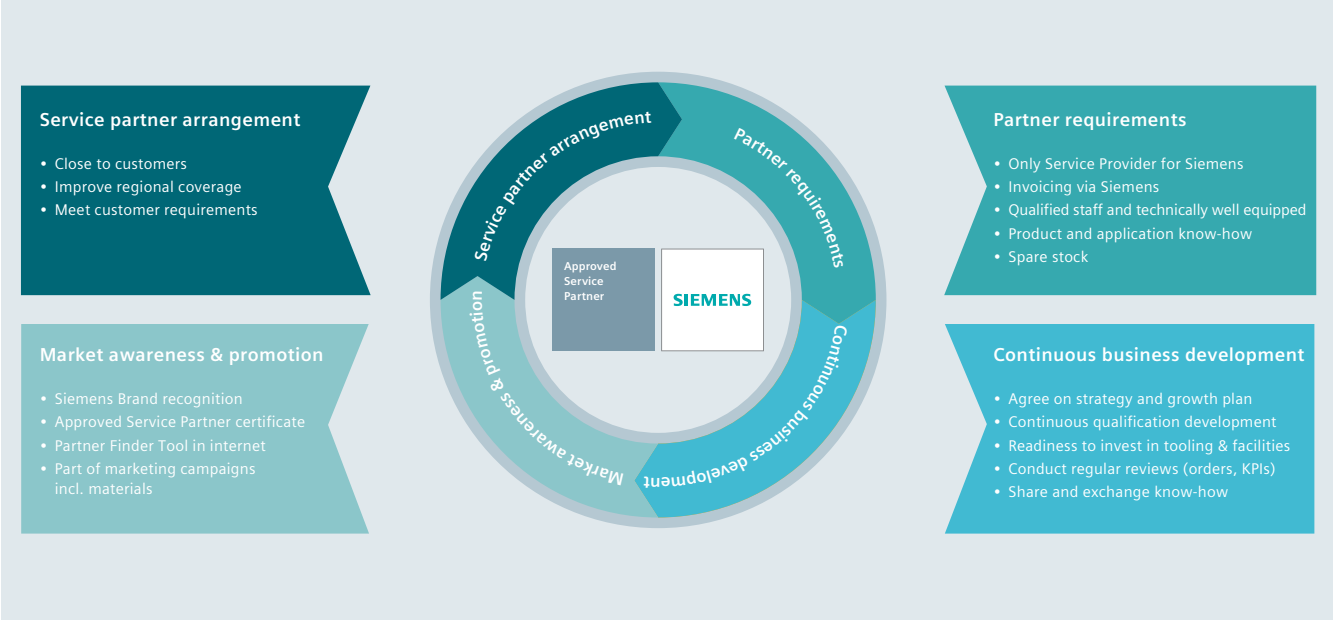

Role of partners

- Act as a competent service delivery on behalf of Siemens
- Regional on-site support
- Bring expertise and service capability
- Together with Siemens secure ongoing development of new service offerings
- Win new service customers

Siemens delivers quality

- Based on shared interest (Siemens and partner)
- Partners attend Siemens training programs on a regular basis
- Build on existing long-term relationships between Siemens and partners
- An extensive certification process ensures that Siemens requirements for competence profile and tooling are maintained

Your benefits

- Competent service delivery
- Close to customers (short reaction time)
- Fast access to critical spares (partner stock)
- Increased flexibility
- Partners typically enjoy a high degree of regional acceptance

© Siemens 2020

© Siemens 2020

Pressure Measurement

1/3 **Product overview**

Single-range transmitters for general applications
1/6 SITRANS P200 for gauge and abs. pressure
1/12 SITRANS P210 for gauge pressure
1/17 SITRANS P220 for gauge pressure
Transmitter for hydrostatic level
1/23 - SITRANS LH100
1/28 - SITRANS LH300
1/34 SITRANS P Compact for gauge and absolute pressure

Pressure transmitters for food, pharmaceuticals and biotechnology
1/43 SITRANS P300 for gauge and abs. pressure
1/65 SITRANS P300 Accessories/Spare parts
1/66 SITRANS P300 - Factory-mounting of valve manifolds on transmitters

Pressure transmitters for gauge pressure for the paper industry
SITRANS P300 and DS III for gauge pressure with PMC connection
1/68 Technical description
Technical specifications, ordering data, dimensional drawings
1/73 - SITRANS P DS III with PMC connection
1/79 - SITRANS P300 with PMC connection

Pressure transmitters for applications with advanced requirements (Advanced)
SITRANS P320/420
1/86 Technical description
Technical specifications, ordering data, dimensional drawings
1/91 - for gauge pressure (pressure series)
1/100 - for gauge pressure (differential presssure series)
1/109 - for gauge and absolute pressure, flush-mounted diaphragm
1/121 - for absolute pressure (pressure series)
1/129 - for absolute pressure (differential pressure series)
1/138 - for differential pressure and flow
1/152 - for level
SITRANS P DS III
1/166 Technical description
Technical specifications, ordering data, dimensional drawings
1/173 - for gauge pressure
1/183 - for gauge and absolute pressure with front-flush diaphragm
1/196 - for absolute pressure (from gauge pressure series)
1/206 - for absolute pressure (from differential pressure series)
1/217 - for differential pressure and flow
1/233 - for level
1/247 Accessories/Spare parts
1/253 Factory-mounting of valve manifolds on transmitters
SITRANS P410
1/257 Technical description
Technical specifications, ordering data, dimensional drawings
1/263 - for gauge pressure
1/275 - for differential pressure and flow
1/294 Accessories/Spare parts

Pressure transmitters for applications with highest requirements (Premium)
SITRANS P500
1/297 Technical description
Technical specifications, ordering data, dimensional drawings
1/297 - for differential pressure and flow
1/310 - for level
1/319 Accessories/Spare parts
1/321 Factory-mounting of valve manifolds on transmitters

© Siemens 2020

Remote seals for pressure transmitters

SITRANS P320/420

1/324 Technical description
Diaphragm seals of sandwich design
1/338 - with flexible capillary
Diaphragm seals of flange design
1/345 - with flexible capillary
1/353 - mounted directly on transmitter
1/360 - mounted directly and with capillary
Diaphragm seal, screwed design
1/367 - mounted directly or/and with capillary
1/372 Quick-release diaphragm seals
1/377 Miniature diaphragm seals
1/379 Inline seals in sandwich design
1/385 Quick-release inline seals
1/390 Flushing rings for diaphragm seals
1/395 Measuring setups
1/396 - with remote seals
1/398 - without remote seals

SITRANS P300, P DS III, P410, P500

1/401 Technical description
Diaphragm seals of sandwich design
1/414 - with flexible capillary
Diaphragm seals of flange design
1/420 - with flexible capillary
1/427 - mounted directly on transmitter
1/432 - mounted directly and with capillary
Diaphragm seal, screwed design
1/438 - mounted directly or/and with capillary
1/442 Quick-release diaphragm seals
1/448 Miniature diaphragm seals
1/450 Inline seals in sandwich design
1/455 Quick-release inline seals
1/459 Flushing rings for diaphragm seals
1/464 Measuring setups
1/465 - with remote seals
1/467 - without remote seals

Fittings

1/470 Technical description
1/471 Selection aid
Shut-off valves for gauge and absolute pressure transmitters
1/473 - Shut-off valves to DIN 16270, DIN 16271 and DIN 16272
1/475 - Angle adapter
1/476 - Shut-off valves/Double shut-off valves
1/478 - Accessories for shut-off valves/double shut-off valves
Shut-off valves for differential pressure transmitters
1/479 - 2-, 3- and 5-spindle valve manifolds DN 5
1/482 - Multiway cocks PN 100
1/484 - 3-way and 5-way valve manifolds DN 5
1/487 - 3-way valve manifold DN 8
1/490 - Valve manifold combination DN 5/DN 8
1/492 - Valve manifold combination DN 8
1/494 - 2-, 3- and 5-spindle valve manifolds for protective box
1/498 - 3- and 5-spindle valve manifold for vertical angular diff. pressure lines
1/501 - Low-pressure multiway cock
1/503 Accessories

You can download all instructions, catalogs and certificates for SITRANS P free of charge at the following Internet address: www.siemens.com/sitransp

© Siemens 2020

Overview

	Application	Description		Software for parameterization
SITRANS P Single-range transmitters for general applications				
	Two or three-wire transmitters for measuring gauge and absolute pressure	**SITRANS P200** • Single-range transmitters for gauge and absolute pressure • Ceramic measuring cell • For general applications	1/6	–
		SITRANS P210 • Single-range transmitters for gauge pressure • Stainless steal measuring cell • For low-pressure applications	1/12	–
		SITRANS P220 • Single-range transmitters for gauge pressure • Stainless steel measuring cell, fully welded • For high-pressure applications and refrigeration technology	1/17	–
	Two-wire transmitter for measuring hydrostatic levels	**SITRANS LH100** • For measuring liquid levels in wells, tanks, channels, dams etc. • With ceramic diaphragm, Ø 23.4 mm	1/23	–
	Two-wire transmitter for measuring hydrostatic levels	**SITRANS LH300** • For measuring liquid levels in wells, tanks, channels, dams etc. • With ceramic diaphragm, Ø 30 mm • Suitable for small measuring ranges	1/28	–
	Transmitters for gauge and absolute pressure for food, pharmaceuticals and biotechnology CERTIFIED EHEDG TYPE EL CLASS I January 2019	**SITRANS P Compact** • Single-range transmitters in two-wire system • Hygiene-based design with various aseptic connections according to EHEDG, FDA and GMP recommendations.	1/34	–
SITRANS P · Transmitters for food, pharmaceuticals and biotechnology				
	Two-wire transmitters for measuring gauge and absolute pressure CERTIFIED EHEDG TYPE EL CLASS I January 2019	**SITRANS P300** • Hygiene-based design according to EHEDG, 3A, FDA and GMP • Parameterization using 3 buttons and communication over HART, PROFIBUS PA or FOUNDATION Fieldbus • Standard process connection G½", ½-NPT and front-flush process connections available • Measuring range adjustment 100 : 1	1/43	SIMATIC PDM
		Factory-mounting of valve manifolds on SITRANS P300 transmitters • Simplified assembly • With pressure test • Stainless steel valve manifolds	1/66	–
SITRANS P · Transmitters for gauge pressure for the paper industry				
	Two-wire transmitters for measuring gauge pressure	**SITRANS P300 and SITRANS P DS III with PMC connection for the paper industry** • Measuring range adjustment 100 : 1 • Process connections for the paper industry • Parameterization using 3 buttons and HART, PROFIBUS PA or FOUNDATION Fieldbus	1/68	SIMATIC PDM

© Siemens 2020

	Application	Description		Software for parameterization
SITRANS P Transmitters for applications with advanced requirements (Advanced)				
	Two-wire transmitters for measuring: • Gauge pressure, • Absolute pressure, • Differential pressure and • Flow or • Level	**SITRANS P320/P420** • Measuring accuracy: - SITRANS P320: 0.065 % - SITRANS P420 0.04 % • Fast step response time of up to 105 ms • Developed according to IEC 61508, SIL2/3 applications • SIL validation remotely • Diagnostics according to Namur NE107 • 4-key operation	1/86	SIMATIC PDM
	Two-wire transmitters for measuring: • Gauge pressure, • Absolute pressure, • Differential pressure and • Flow or • Level	**SITRANS P DS III** • Measuring accuracy up to 0.065 % • Measuring range adjustment: 100 : 1 • Parameterization using: - 3 buttons and HART for SITRANS P DS III HART - 3 buttons and PROFIBUS PA for SITRANS P DS III PA series - 3 buttons and FOUNDATION Fieldbus for SITRANS P DS III FF series • Available ex stock	1/166	SIMATIC PDM
		Factory mounting of valve manifolds on gauge, absolute or differential pressure transmitters SITRANS P DS III • Simplified assembly • With pressure test • Stainless steel valve manifolds	1/253	–
	Two-wire transmitters for measuring: • Gauge pressure, • Differential pressure and • Flow	**SITRANS P410** • Measuring accuracy up to 0.04 % • Measuring range adjustment 100 : 1 • Parameterization using: - 3 buttons and HART for SITRANS P410 HART - 3 buttons and PROFIBUS PA for SITRANS P410 PA - 3 buttons and FOUNDATION Fieldbus for SITRANS P410 FF	1/257	SIMATIC PDM
		Factory mounting of valve manifolds on gauge, absolute or differential pressure transmitters SITRANS P410 • Factory valve block mounting for SITRANS P410 is possible. Depending on the available P410 variants, please see the configuration options for SITRANS P DS III (page 1/253).		–
SITRANS P - Transmitters for applications with highest requirements (Premium)				
	Two-wire transmitters for measuring: • Differential pressure • Volume flow • Mass flow • Level • Volume • Mass	**SITRANS P500** • Measuring accuracy up to 0.03 % • Measuring range adjustment: 200 :1 • High measuring accuracy • Very fast response time • Extremely good long-term stability • Parameterization using 3 buttons or HART	1/297	SIMATIC PDM
		Factory-mounting of manifolds on differential pressure transmitters SITRANS P500 • Simplified assembly • With pressure test • Stainless steel valve manifolds	1/321	–

© Siemens 2020

	Application	Description		Software for parameterization
Remote seals for transmitters SITRANS P				
	Remote seals for measuring viscous, corrosive or fibrous media (as well as media at extreme temperatures)	Remote seals for SITRANS P320/420 Remote seals for SITRANS P300, P DS III, P410, P500 • Remote seals in sandwich and flange designs • Quick-release remote seals for the food industry • Wide range of diaphragm materials and fill fluid available	1/324 1/401	–
Fittings				
	Shutting off the lines for the medium and differential pressure Mounting of transmitter on valve manifold or shut-off fitting	Shut-off fittings and valve manifolds available in steel, brass or stainless steel Valve manifolds available for the various process connections of the SITRANS P transmitters	1/470	–
		As accessory for fittings are available: • Oval flange • Adapters • Connection glands • Connection parts G½ • Water traps • Sealing rings to EN 837-1 • Pressure surge reducers • Primary shut-off valves • Compensation vessels • Connection parts	 1/503 1/504 1/505 1/506 1/507 1/507 1/508 1/509 1/511 1/512	

Supplied product documentation on DVD and safety instructions

The scope of delivery of the Siemens products for process instrumentation includes a multilingual instruction sheet with **safety instructions** as well as a uniform **mini DVD – Process Instrumentation and Weighing Systems**.

This DVD contains the most important manuals and certificates for the Siemens process instrumentation and weighing technology portfolio. The delivery may also contain product-specific or order-specific printed materials.

For additional information, refer to the Annex on page 10/3.

© Siemens 2020

Overview

The SITRANS P200 pressure transmitter measures the gauge and absolute pressure of liquids, gases and vapors.

- Ceramic measuring cell
- Gauge and absolute measuring ranges 1 to 60 bar (15 to 1000 psi)
- For general applications

Benefits

- High measuring accuracy
- Rugged stainless steel enclosure
- High overload withstand capability
- For aggressive and non-aggressive media
- For measuring the pressure of liquids, gases and vapors
- Compact design

Application

The SITRANS P200 pressure transmitter for gauge and absolute pressure is used in the following industrial areas:

- Mechanical engineering
- Shipbuilding
- Power engineering
- Chemical industry
- Water supply

Design

Device structure without explosion protection

The pressure transmitter consists of a piezoresistive measuring cell with a diaphragm installed in a stainless steel enclosure. It can be used with a connector per EN 175301-803-A (IP65), a device plug M12 (IP67), a cable (IP67) or a Quickon cable quick screw connection (IP67) connected electrically. The output signal is between 4 and 20 mA or 0 and 10 V.

Device structure with explosion protection

The pressure transmitter consists of a piezoresistive measuring cell with a diaphragm installed in a stainless steel enclosure. It can be used with a connector per EN 175301-803-A (IP65) or a device plug M12 (IP67) connected electrically. The output signal is between 4 and 20 mA.

Function

The pressure transmitter measures the gauge and absolute pressure of liquids and gases as well as the level of liquids.

Mode of operation

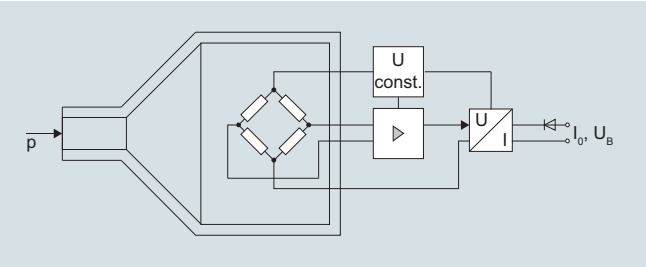

SITRANS P200 pressure transmitters (7MF1565-...), functional diagram

The ceramic measuring cell has a thick-film resistance bridge to which the operating pressure p is transmitted through a ceramic diaphragm.

The voltage output from the measuring cell is converted by an amplifier into an output current of 4 to 20 mA or an output voltage of 0 to 10 V DC.

The output current and voltage are linearly proportional to the input pressure.

© Siemens 2020

Technical specifications

Application	
Gauge and absolute pressure measurement	Liquids, gases and vapors
Mode of operation	
Measuring principle	Piezo-resistive measuring cell (ceramic diaphragm)
Measured variable	Gauge and absolute pressure
Inputs	
Measuring range	
• Gauge pressure - Metric - US measuring range	 1 … 60 bar (15 … 870 psi) 15 … 1000 psi
• Absolute pressure - Metric - US measuring range	 0.6 … 16 bar a (10 … 232 psi apsi a) 10 … 300 psi a
Output	
Current signal	4 ... 20 mA
• Load	(U_B - 10 V)/0.02 A
• Auxiliary power U_B	DC 7 ... 33 V (10 ... 30 V for Ex)
Voltage signal	0 ... 10 V DC
• Load	≥ 10 kΩ
• Auxiliary power U_B	12 ... 33 V DC
• Power consumption	< 7 mA at 10 kΩ
Ratiometric output	0 ... 90 %
• Load	≥ 10 kΩ
• Auxiliary power U_B	5 V DC ± 10 %
• Power consumption	< 7 mA at 10 kΩ
Characteristic curve	Linear rising
Measuring accuracy	
Error in measurement at limit setting incl. hysteresis and reproducibility	• Typical: 0.25 % of measuring span • Maximum: 0.5 % of measuring span
Step response time T_{99}	< 5 ms
Long-term stability	
• Lower range value and measuring span	0.25 % of measuring span/year
Influence of ambient temperature	
• Lower range value and measuring span	0.25 %/10 K of measuring span
• Influence of power supply	0.005 %/V
Operating conditions	
Process temperature with gasket made of:	
• FPM (Standard)	-15 ... +125 °C (+5 ... +257 °F)
• Neoprene	-35 ... +100 °C (-31 ... +212 °F)
• Perbunan	-20 ... +100 °C (-4 ... +212 °F)
• EPDM	-40 ... +125 °C (-40 ... +257 °F), usable for drinking water
Ambient temperature	-25 ... +85 °C (-13 ... +185 °F)
Storage temperature	-50 ... +100 °C (-58 ... +212 °F)
Degree of protection (to EN 60529)	• IP 65 with connector per EN 175301-803-A • IP 67 with device plug M12 • IP 67 with cable • IP 67 with cable quick screw connection
Electromagnetic compatibility	• acc. IEC 61326-1/-2/-3 • acc. NAMUR NE21, only for ATEX versions and with a max. measuring deviation ≤ 1 %
Design	
Weight	Approx. 0.090 kg (0.198 lb)
Process connections	See dimension drawings
Electrical connections	• Connector per EN 175301-803-A Form A with cable inlet M16x1.5 or ½-14 NPT or Pg 11 • Device plug M12 • 2 or 3-wire (0.5 mm^2) cable (∅ ± 5.4 mm) • Quickon cable quick screw connection
Wetted parts materials	
• Measuring cell	Al_2O_3 - 96 %
• Process connection	Stainless steel, mat. No. 1.4404 (SST 316 L)
• Gasket	• FPM (Standard) • Neoprene • Perbunan • EPDM
Non-wetted parts materials	
• Enclosure	Stainless steel, mat. No. 1.4404 (SST 316 L)
• Rack	Plastic
• Cables	PVC
Certificates and approvals	
Classification according to pressure equipment directive (PED 2014/68/EU)	For gases of fluid group 1 and liquids of fluid group 1; complies with requirements of article 4, paragraph 3 (sound engineering practice)
Lloyd's Register of Shipping (LR)[1]	12/20010
Germanischer Lloyd (GL)[1]	GL19740 11 HH00
American Bureau of Shipping (ABS)[1]	ABS_11_HG 789392_PDA
Bureau Veritas (BV)[1]	BV 271007A0 BV
Det Norske Veritas (DNV)[1]	A 12553
Drinking water approval (ACS)[1]	ACS 15 ACC NY 360
EAC[1]	№ TC RU C-DE.ГБ05.В.00732 ОС НАНИО «ЦСВЭ»
Underwriters Laboratories (UL)[1]	
• for USA and Canada	UL 20110217 - E34453
• worldwide	IEC UL DK 21845
Explosion protection	
Intrinsic safety "i" (only with current output)	Ex II 1/2 G Ex ia IIC T4 Ga/Gb Ex II 1/2 D Ex ia IIIC T125 °C Da/Db
EC type-examination certificate	SEV 10 ATEX 0146
Connection to certified intrinsically-safe resistive circuits with maximum values:	U_i ≤ 30 V DC; I_i ≤ 100 mA; P_i ≤ 0.75 W
Effective internal inductance and capacity for versions with plugs per EN 175301-803-A and M12	L_i = 0 nH; C_i = 0 nF

[1] For variants with output signal 0 ... 5 V and ratiometric output available soon.

© Siemens 2020

Selection and ordering data

Article No. | Order code

SITRANS P 200 pressure transmitters for pressure and absolute pressure for general applications ↗ **7MF1565-** ■■■■■ - ■■■■ ■■■
Characteristic curve deviation typ. 0.25 %
Wetted parts materials: Ceramic and stainless steel + sealing material
Non-wetted parts materials: stainless steel

↗ Click on the Article No. for the online configuration in the PIA Life Cycle Portal.

Measuring range		Overload limit Min.		Overload limit Max.		Burst pressure		Order code
For gauge pressure								
0 ... 1 bar	(0 ... 14.5 psi)	-1 bar	(-14.5 psi)	2.5 bar	(36.26 psi)	> 2.5 bar	(> 36.3 psi)	3 B A
0 ... 1.6 bar	(0 ... 23.2 psi)	-1 bar	(-14.5 psi)	4 bar	(58.02 psi)	> 4 bar	(> 58.0 psi)	3 B B
0 ... 2.5 bar	(0 ... 36.3 psi)	-1 bar	(-14.5 psi)	6.25 bar	(90.65 psi)	> 6.25 bar	(> 90.7 psi)	3 B D
0 ... 4 bar	(0 ... 58.0 psi)	-1 bar	(-14.5 psi)	10 bar	(145 psi)	> 10 bar	(> 145 psi)	3 B E
0 ... 6 bar	(0 ... 87.0 psi)	-1 bar	(-14.5 psi)	15 bar	(217 psi)	> 15 bar	(> 217 psi)	3 B G
0 ... 10 bar	(0 ... 145 psi)	-1 bar	(-14.5 psi)	25 bar	(362 psi)	> 25 bar	(> 362 psi)	3 C A
0 ... 16 bar	(0 ... 232 psi)	-1 bar	(-14.5 psi)	40 bar	(580 psi)	> 40 bar	(> 580 psi)	3 C B
0 ... 25 bar	(0 ... 363 psi)	-1 bar	(-14.5 psi)	62.5 bar	(906 psi)	> 62.5 bar	(> 906 psi)	3 C D
0 ... 40 bar	(0 ... 580 psi)	-1 bar	(-14.5 psi)	100 bar	(1450 psi)	> 100 bar	(> 1450 psi)	3 C E
0 ... 60 bar	(0 ... 870 psi)	-1 bar	(-14.5 psi)	150 bar	(2175 psi)	> 150 bar	(> 2175 psi)	3 C G
Other version, add Order code and plain text: Measuring range: ... up to... bar (psi)								9 A A H 1 Y
For absolute pressure								
0 ... 0.6 bar a	(0 ... 8.7 psi a)	0 bar a	(0 psi a)	2.5 bar a	(36.26 psi a)	> 2.5 bar a	(> 36.3 psi a)	5 A G
0 ... 1 bar a	(0 ... 14.5 psi a)	0 bar a	(0 psi a)	2.5 bar a	(36.26 psi a)	> 2.5 bar a	(> 36.3 psi a)	5 B A
0 ... 1.6 bar a	(0 ... 23.2 psi a)	0 bar a	(0 psi a)	4 bar a	(58.02 psi a)	> 4 bar a	(> 58.0 psi a)	5 B B
0 ... 2.5 bar a	(0 ... 36.3 psi a)	0 bar a	(0 psi a)	6.25 bar a	(90.65 psi a)	> 6.25 bar a	(> 90.7 psi a)	5 B D
0 ... 4 bar a	(0 ... 58.0 psi a)	0 bar a	(0 psi a)	10 bar a	(145 psi a)	> 10 bar a	(> 145 psi a)	5 B E
0 ... 6 bar a	(0 ... 87.0 psi a)	0 bar a	(0 psi a)	15 bar a	(217 psi a)	> 15 bar a	(> 217 psi a)	5 B G
0 ... 10 bar a	(0 ... 145 psi)	0 bar a	(0 psi a)	25 bar a	(362 psi a)	> 25 bar a	(> 362 psi a)	5 C A
0 ... 16 bar a	(0 ... 232 psi)	0 bar a	(0 psi a)	40 bar a	(580 psi a)	> 40 bar a	(> 580 psi a)	5 C B
Other version, add Order code and plain text: Measuring range: ... up to ... mbar a (psi a)								9 A A H 2 Y
Measuring ranges for gauge pressure								
0 ... 15 psi		-14.5 psi		35 psi		> 35 psi		4 B B
3 ... 15 psi		-14.5 psi		35 psi		> 35 psi		4 B C
0 ... 20 psi		-14.5 psi		50 psi		> 50 psi		4 B D
0 ... 30 psi		-14.5 psi		80 psi		> 80 psi		4 B E
0 ... 60 psi		-14.5 psi		140 psi		> 140 psi		4 B F
0 ... 100 psi		-14.5 psi		200 psi		> 200 psi		4 B G
0 ... 150 psi		-14.5 psi		350 psi		> 350 psi		4 C A
0 ... 200 psi		-14.5 psi		550 psi		> 550 psi		4 C B
0 ... 300 psi		-14.5 psi		800 psi		> 800 psi		4 C D
0 ... 500 psi		-14.5 psi		1400 psi		> 1400 psi		4 C E
0 ... 750 psi		-14.5 psi		2000 psi		> 2000 psi		4 C F
0 ... 1000 psi		-14.5 psi		2000 psi		> 2000 psi		4 C G
Other version, add Order code and plain text: Measuring range: ... up to ... psi								9 A A H 1 Y
Measuring ranges for absolute pressure								
0 ... 10 psi a		0 psi a		35 psi a		> 35 psi a		6 A G
0 ... 15 psi a		0 psi a		35 psi a		> 35 psi a		6 B A
0 ... 20 psi a		0 psi a		50 psi a		> 50 psi a		6 B B
0 ... 30 psi a		0 psi a		80 psi a		> 80 psi a		6 B D
0 ... 60 psi a		0 psi a		140 psi a		> 140 psi a		6 B E
0 ... 100 psi a		0 psi a		200 psi a		> 200 psi a		6 B G
0 ... 150 psi a		0 psi a		350 psi a		> 350 psi a		6 C A
0 ... 200 psi a		0 psi a		550 psi a		> 550 psi a		6 C B
0 ... 300 psi a		0 psi a		800 psi a		> 800 psi a		6 C C
Other version, add Order code and plain text: Measuring range: ... up to ... psi a								9 A A H 2 Y

© Siemens 2020

Selection and ordering data	Article No.	Order code
SITRANS P 200 pressure transmitters for pressure and absolute pressure for general applications Accuracy typ. 0.25 % Wetted parts materials: Ceramic and stainless steel + sealing material Non-wetted parts materials: stainless steel	7MF1565-	-
Output signal		
4 ... 20 mA; two-wire system; power supply 7 ... 33 V DC (10 ... 30 V DC for ATEX versions)		0
0 ... 10 V; three-wire system; power supply 12 ... 33 V DC		1 0
0 ... 5 V; 3-wire system; auxiliary power 7 ... 33 V DC		2 0
Ratiometric 10 ... 90 %; 3-wire system; auxiliary power 5 V DC ± 10 %		3 0
Explosion protection (only 4 ... 20 mA)		
None		0
With explosion protection Ex ia IIC T4		1
Electrical connection		
Connector per DIN EN 175301-803-A, stuffing box thread M16 (with coupling)		1
Device plug M12 per IEC 61076-2-101		2
Connection via fixed mounted cable, 2 m (not for type of protection "Intrinsic safety i")		0 3
Quickon cable quick screw connection PG9 (not for type of protection "Intrinsic safety i")		0 4
Connector per DIN EN 175301-803-A, stuffing box thread 1/2"-14 NPT (with coupling)		5
Connector per DIN EN 175301-803-A, stuffing box thread PG11 (with coupling)		6
Fixed mounted cable, length 5 m		0 7
Special version		9 N 1 Y
Process connection		
G½" male per EN 837-1 (½" BSP male) (standard for metric pressure ranges mbar, bar)		A
G½" male thread and G1/8" female thread		B
G¼" male per EN 837-1 (¼" BSP male)		C
7/16"-20 UNF male		D
¼"-18 NPT male (standard for pressure ranges inH_2O and psi)		E
¼"-18 NPT female		F
½"-14 NPT male		G
½"-14 NPT female		H
7/16"-20 UNF female		J
M20x1.5 male		P
G1/4" to DIN 3852 Form E		Q
G1/2" to DIN 3852 Form E		R
Special version		Z P 1 Y
Sealing material between sensor and enclosure		
Viton (FPM, standard)		A
Neoprene (CR)		B
Perbunan (NBR)		C
EPDM		D
Special version		Z Q 1 Y
Version		
Standard version		1
Further designs		
Supplement the Article No. with "**-Z**" and add Order code.		
Quality test certificate, 5-point factory calibration (IEC 60770-2)	**C11**	
Oxygen version, free of oil and degreased, max. operating pressure 60 bar, max. temperature of medium +85 °C (only in conjunction with the sealing material Viton between sensor and enclosure and not with explosion protection version)	**E10**	

© Siemens 2020

Dimensional drawings

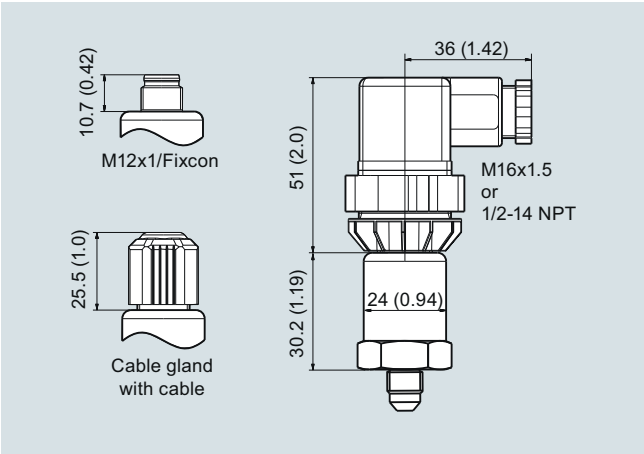

SITRANS P200, electrical connections, dimensions in mm (inch)

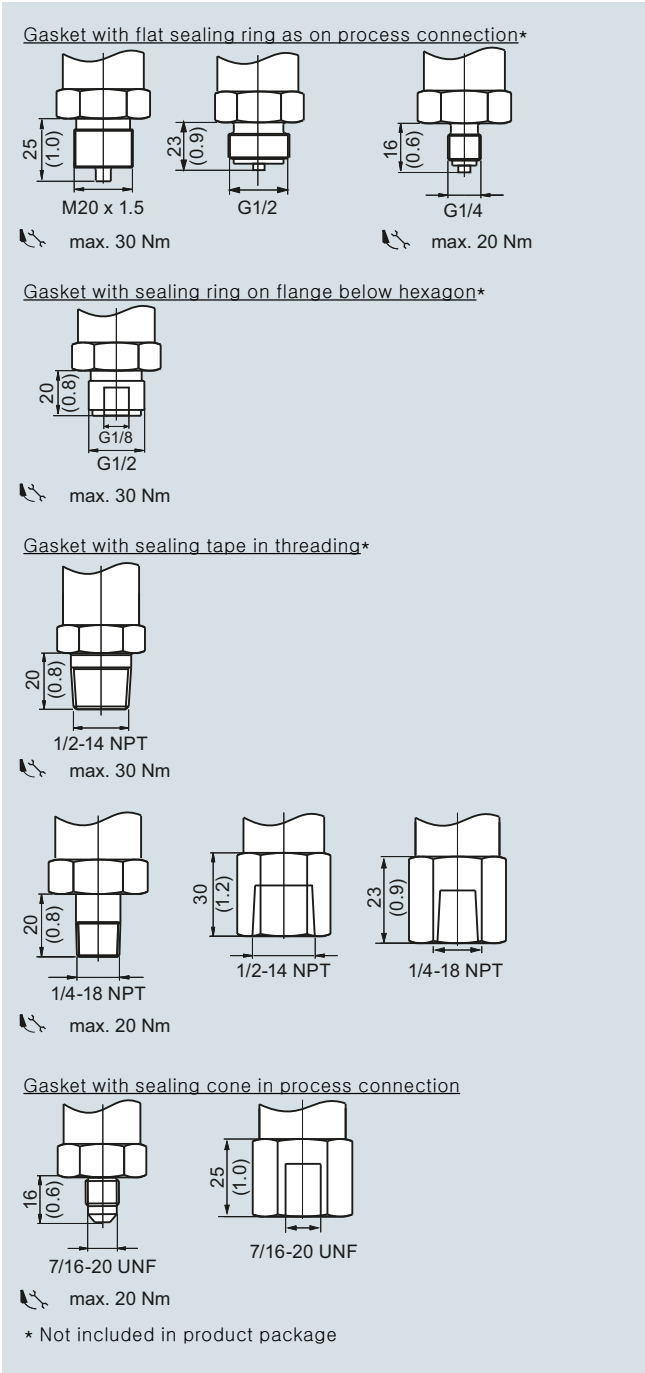

SITRANS P200, process connections, dimensions in mm (inch)

© Siemens 2020

Schematics

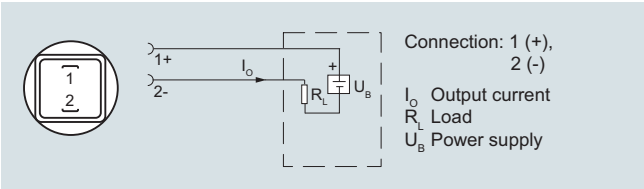

Connection with current output and connector per EN 175301

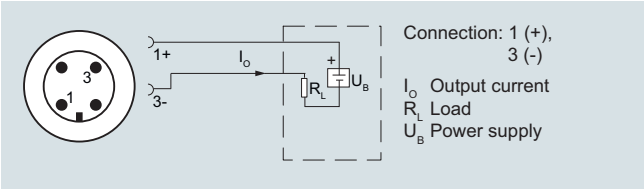

Connection with current output and device plug M12x1

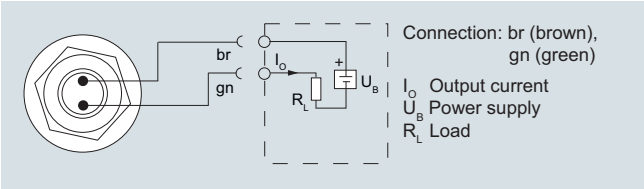

Connection with current output and cable

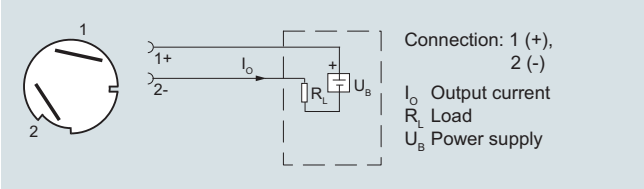

Connection with current output and Quickon cable quick screw connection

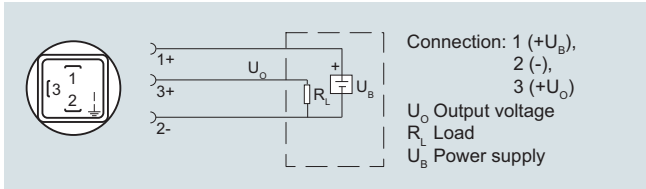

Connection with voltage output, ratiometric output and plug according to EN 175301

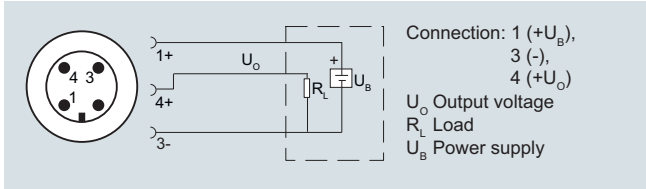

Connection with voltage output, ratiometric output and device plug M12x1

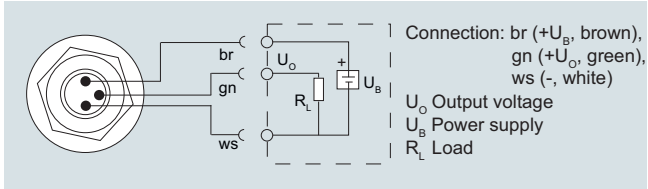

Connection with voltage output, ratiometric output and cable

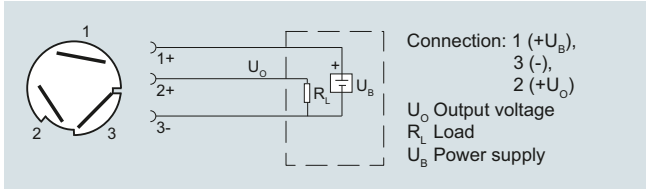

Connection with voltage output, ratiometric output and Quickon fast cable termination

Version with explosion protection: 4 ... 20 mA

The grounding connection is conductively bonded to the transmitter enclosure

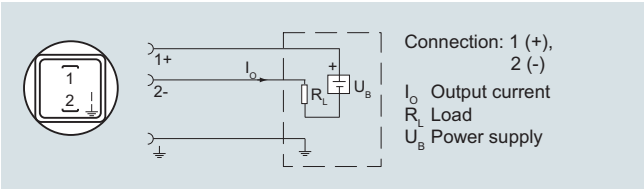

Connection with current output and connector per EN 175301 (Ex)

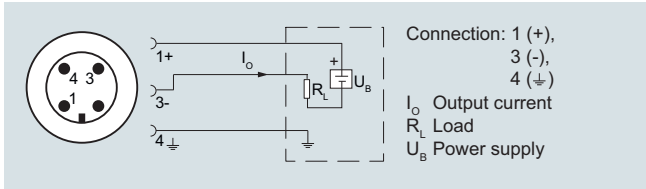

Connection with current output and device plug M12x1 (Ex)

© Siemens 2020

Overview

The pressure transmitter SITRANS P210 measures the gauge pressure of liquids, gases and vapors.

- Stainless steal measuring cell
- Measuring ranges 100 to 600 mbar (1.45 to 8.7 psi) relative
- For low-pressure applications

Benefits

- High measuring accuracy
- Rugged stainless steel enclosure
- High overload withstand capability
- For aggressive and non-aggressive media
- For measuring the pressure of liquids, gases and vapors
- Compact design

Application

The pressure transmitter SITRANS P210 for gauge pressure is used in the following industrial areas:

- Mechanical engineering
- Shipbuilding
- Power engineering
- Chemical industry
- Water supply

Design

Device structure without explosion protection

The pressure transmitter consists of a piezoresistive measuring cell with a diaphragm installed in a stainless steel enclosure. It can be used with a connector per EN 175301-803-A (IP65), a device plug M12 (IP67), a cable (IP67) or a Quickon cable quick screw connection (IP67) connected electrically. The output signal is between 4 and 20 mA or 0 and 10 V.

Device structure with explosion protection

The pressure transmitter consists of a piezoresistive measuring cell with a diaphragm installed in a stainless steel enclosure. It can be used with a connector per EN 175301-803-A (IP65) or a device plug M12 (IP67) connected electrically. The output signal is between 4 and 20 mA.

Function

The pressure transmitter measures the gauge pressure of liquids and gases as well as the level of liquids.

Mode of operation

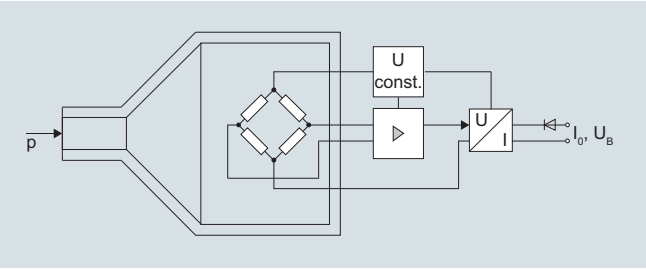

SITRANS P210 pressure transmitters (7MF1566-...), functional diagram

The stainless steel measuring cell has a thin-film resistance bridge to which the operating pressure p is transmitted through a stainless steel diaphragm.

The voltage output from the measuring cell is converted by an amplifier into an output current of 4 to 20 mA or an output voltage of 0 to 10 V DC.

The output current and voltage are linearly proportional to the input pressure.

© Siemens 2020

Technical specifications

Application	
Gauge measurement	Liquids, gases and vapors
Mode of operation	
Measuring principle	Piezoresistive measuring cell (stainless steel diaphragm)
Measured variable	Gauge pressure
Inputs	
Measuring range	
• Gauge pressure	100 … 600 mbar (1.5 … 8.7 psi)
Output	
Current signal	4 ... 20 mA
• Load	(U_B - 10 V)/0.02 A
• Auxiliary power U_B	DC 7 ... 33 V (10 ... 30 V for Ex)
Voltage signal	0 ... 10 V DC
• Load	≥ 10 kΩ
• Auxiliary power U_B	12 ... 33 V DC
• Power consumption	< 7 mA at 10 kΩ
Ratiometric output	0 ... 90 %
• Load	≥ 10 kΩ
• Auxiliary power U_B	5 V DC ± 10 %
• Power consumption	< 7 mA at 10 kΩ
Characteristic curve	Linear rising
Measuring accuracy	
Error in measurement at limit setting incl. hysteresis and reproducibility	• Typical: 0.25 % of measuring span • Maximum: 0.5 % of measuring span
Step response time T_{99}	< 5 ms
Long-term stability	
• Lower range value and measuring span	0.25 % of measuring span/year
Influence of ambient temperature	
• Lower range value and measuring span	• 0.25 %/10 K of measuring span • 0.5 %/10K of measuring span for a measuring range 100 … 400 mbar
• Influence of power supply	0.005 %/V
Operating conditions	
Process temperature with gasket made of:	
• FPM (Standard)	-15 ... +125 °C (+5 ... +257 °F)
• Neoprene	-35 ... +100 °C (-31 ... +212 °F)
• Perbunan	-20 ... +100 °C (-4 ... +212 °F)
• EPDM	-40 ... +125 °C (-40 ... +257 °F), usable for drinking water
Ambient temperature	-25 ... +85 °C (-13 ... +185 °F)
Storage temperature	-50 ... +100 °C (-58 ... +212 °F)
Degree of protection (to EN 60529)	• IP 65 with connector per EN 175301-803-A • IP 67 with device plug M12 • IP 67 with cable • IP 67 with cable quick screw connection
Electromagnetic compatibility	• acc. IEC 61326-1/-2/-3 • acc. NAMUR NE21, only for ATEX versions and with a max. measuring deviation ≤ 1 %
Mounting position	upright

Design	
Weight	Approx. 0.090 kg (0.198 lb)
Process connections	See dimension drawings
Electrical connections	• Connector per EN 175301-803-A Form A with cable inlet M16x1.5 or ½-14 NPT or Pg 11 • Device plug M12 • 2 or 3-wire (0.5 mm^2) cable (∅ ± 5.4 mm) • Quickon cable quick screw connection
Wetted parts materials	
• Measuring cell	Stainless steel, mat.-No. 1.4435
• Process connection	Stainless steel, mat. No. 1.4404 (SST 316 L)
• Gasket	• FPM (Standard) • Neoprene • Perbunan • EPDM
Non-wetted parts materials	
• Enclosure	Stainless steel, mat. No. 1.4404 (SST 316 L)
• Rack	Plastic
• cables	PVC
Certificates and approvals	
Classification according to pressure equipment directive (PED 2014/68/EU)	For gases of fluid group 1 and liquids of fluid group 1; meets requirements as per article 4, paragraph 3 (good engineering practice)
Lloyd's Register of Shipping (LR)[1]	12/20010
Germanischer Lloyd (GL)[1]	GL19740 11 HH00
American Bureau of Shipping (ABS)[1]	ABS_11_HG 789392_PDA
Bureau Veritas (BV)[1]	BV 271007A0 BV
Det Norske Veritas (DNV)[1]	A 12553
Drinking water approval (ACS)[1]	ACS 15 ACC NY 360
EAC[1]	№ TC RU C-DE.ГБ05.В.00732 ОС НАНИО «ЦСВЭ»
Underwriters Laboratories (UL)[1]	
• for USA and Canada	UL 20110217 - E34453
• worldwide	IEC UL DK 21845
Explosion protection	
Intrinsic safety "i" (only with current output)	Ex II 1/2 G Ex ia IIC T4 Ga/Gb Ex II 1/2 D Ex ia IIIC T125 °C Da/Db
EC type-examination certificate	SEV 10 ATEX 0146
Connection to certified intrinsically-safe resistive circuits with maximum values:	U_i ≤ 30 V DC; I_i ≤ 100 mA; P_i ≤ 0.75 W
Effective internal inductance and capacity for versions with plugs per EN 175301-803-A and M12	L_i = 0 nH; C_i = 0 nF

[1] For variants with output signal 0 ... 5 V and ratiometric output available soon.

© Siemens 2020

Selection and ordering data

Selection and ordering data	Article No.	Order code
SITRANS P 210 pressure transmitters for gauge pressure for low pressure applications ↗	7MF1566-	
Accuracy typ. 0.25 %		
Wetted parts materials: Stainless steel + sealing material		
Non-wetted parts materials: stainless steel		
↗ Click on the Article No. for the online configuration in the PIA Life Cycle Portal.		

Measuring range	Overload limit min.	Overload limit max.	Burst pressure	Article No.	Order code
For gauge pressure					
0...100 mbar (1.45 psi)	-400 mbar (-5.8 psi)	400 mbar (5.8 psi)	1 bar (14.5 psi)	3AA	
0...160 mbar (2.32 psi)	-400 mbar (-5.8 psi)	400 mbar (5.8 psi)	1 bar (14.5 psi)	3AB	
0...250 mbar (3.63 psi)	-800 mbar (-11.6 psi)	1000 mbar (14.5 psi)	2 bar (29.0 psi)	3AC	
0...400 mbar (5.8 psi)	-800 mbar (-11.6 psi)	1000 mbar (14.5 psi)	2 bar (29.0 psi)	3AD	
0...600 mbar (8.7 psi)	-1000 mbar (-14.5 psi)	2000 mbar (29.0 psi)	3 bar (43.5 psi)	3AG	
Other version, add Order code and plain text: Measuring range: ... up to ... mbar (psi)				9AA	H1Y

	Article No.	Order code
Output signal		
4 ... 20 mA; two-wire system; power supply 7 ... 33 V DC (10 ... 30 V DC for ATEX versions)	0	
0 ... 10 V; three-wire system; power supply 12 ... 33 V DC	10	
0 ... 5 V; 3-wire system; auxiliary power 7 ... 33 V DC	20	
Ratiometric 10 ... 90 %; 3-wire system; auxiliary power 5 V DC ± 10 %	30	
Explosion protection (only 4 ... 20 mA)		
None	0	
With explosion protection Ex ia IIC T4	1	
Electrical connection		
Connector per DIN EN 175301-803-A, stuffing box thread M16 (with coupling)	1	
Device plug M12 per IEC 61076-2-101	2	
Connection via fixed mounted cable, 2 m (not for type of protection "Intrinsic safety i")	03	
Quickon cable quick screw connection PG9 (not for type of protection "Intrinsic safety i")	04	
Connector per DIN EN 175301-803-A, stuffing box thread 1/2"-14 NPT (with coupling)	5	
Connector per DIN EN 175301-803-A, stuffing box thread PG11 (with coupling)	6	
Fixed mounted cable, length 5 m	07	
Special version	9	N1Y
Process connection		
G½" male per EN 837-1 (½" BSP male) (standard for metric pressure ranges mbar, bar)	A	
G½" male thread and G1/8" female thread	B	
G¼" male per EN 837-1 (¼" BSP male)	C	
7/16"-20 UNF male	D	
¼"-18 NPT male (standard for pressure ranges inH_2O and psi)	E	
¼"-18 NPT female	F	
½"-14 NPT male	G	
½"-14 NPT female	H	
7/16"-20 UNF female	J	
M20x1.5 male	P	
G1/4" to DIN 3852 Form E	Q	
G1/2" to DIN 3852 Form E	R	
Special version	Z	P1Y
Sealing material between sensor and enclosure		
Viton (FPM, standard)	A	
Neoprene (CR)	B	
Perbunan (NBR)	C	
EPDM	D	
Special version	Z	Q1Y
Version		
Standard version	1	
Further designs		
Supplement the Article No. with "**-Z**" and add Order code.		
Quality test certificate, 5-point factory calibration (IEC 60770-2)	C11	

© Siemens 2020

Dimensional drawings

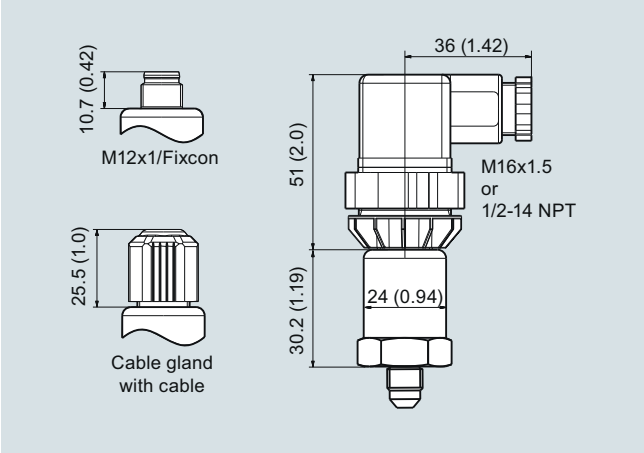

SITRANS P210, electrical connections, dimensions in mm (inch)

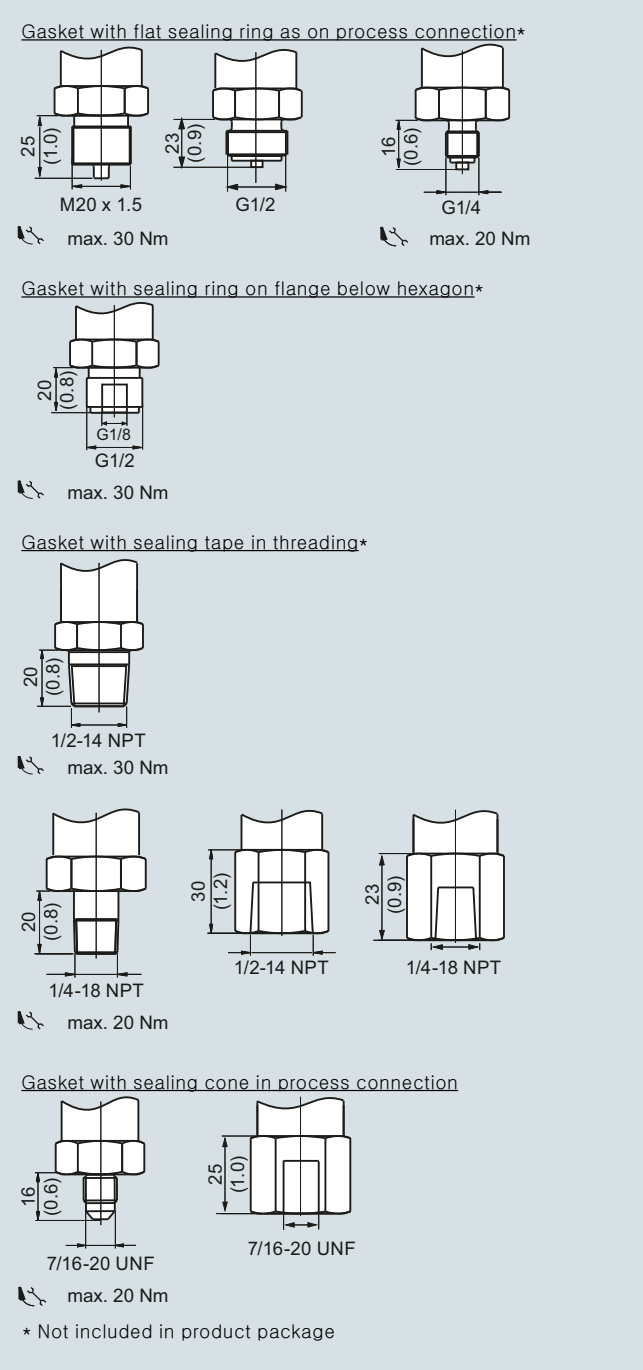

SITRANS P210, process connections, dimensions in mm (inch)

© Siemens 2020

Schematics

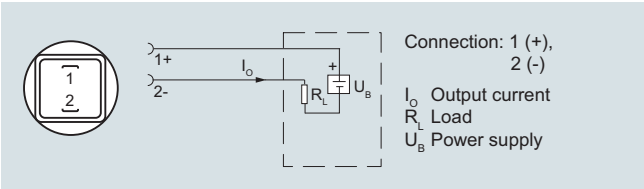

Connection with current output and connector per EN 175301

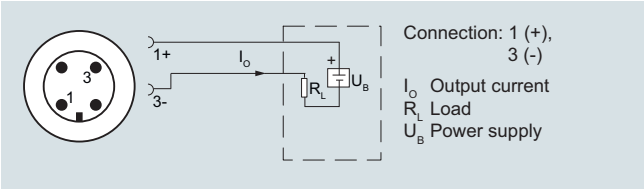

Connection with current output and device plug M12x1

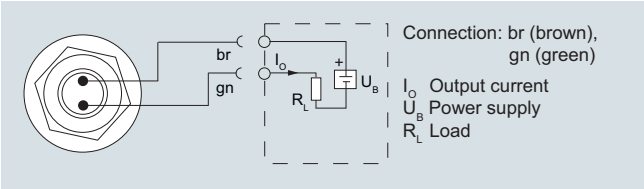

Connection with current output and cable

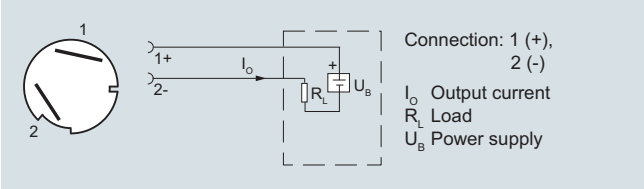

Connection with current output and Quickon cable quick screw connection

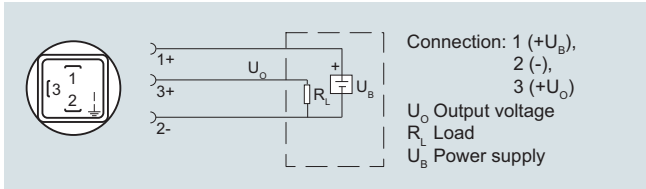

Connection with voltage output, ratiometric output and plug according to EN 175301

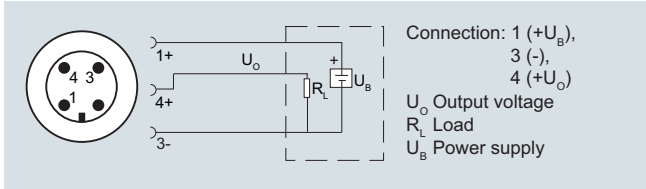

Connection with voltage output, ratiometric output and device plug M12x1

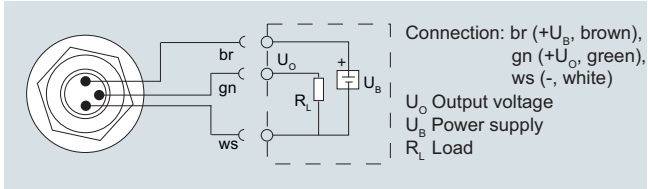

Connection with voltage output, ratiometric output and cable

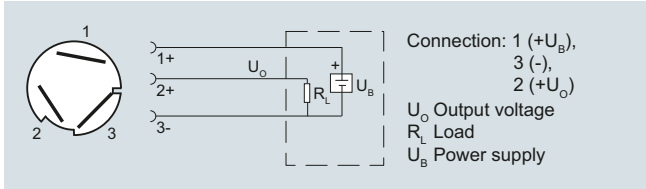

Connection with voltage output, ratiometric output and Quickon fast cable termination

Version with explosion protection: 4 ... 20 mA

The grounding connection is conductively bonded to the transmitter enclosure

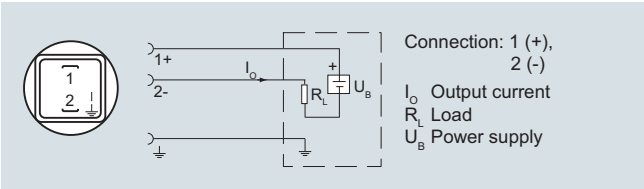

Connection with current output and connector per EN 175301 (Ex)

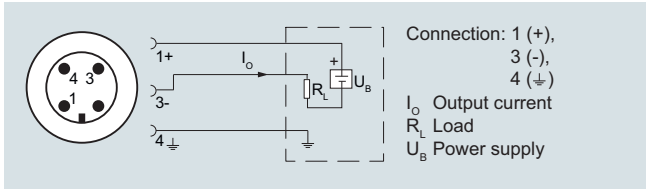

Connection with current output and device plug M12x1 (Ex)

© Siemens 2020

Overview

The pressure transmitter SITRANS P220 measures the gauge pressure of liquids, gases and vapors.

- Stainless steel measuring cell, fully welded
- Measuring ranges 2.5 to 1000 bar (36.3 to 14500 psi) relative
- For high-pressure applications and refrigeration technology division

Benefits

- High measuring accuracy
- Rugged stainless steel enclosure
- High overload withstand capability
- For aggressive and non-aggressive media
- For measuring the pressure of liquids, gases and vapors
- Compact design
- Gasket-less

Application

The pressure transmitter SITRANS P220 for gauge pressure is used in the following industrial areas:

- Mechanical engineering
- Shipbuilding
- Power engineering
- Chemical industry
- Water supply

Design

Device structure without explosion protection

The pressure transmitter consists of a piezoresistive measuring cell with a diaphragm installed in a stainless steel enclosure. It can be used with a connector per EN 175301-803-A (IP65), a device plug M12 (IP67), a cable (IP67) or a Quickon cable quick screw connection (IP67) connected electrically. The output signal is between 4 and 20 mA or 0 and 10 V.

Device structure with explosion protection

The pressure transmitter consists of a piezoresistive measuring cell with a diaphragm installed in a stainless steel enclosure. It can be used with a connector per EN 175301-803-A (IP65) or a device plug M12 (IP67) connected electrically. The output signal is between 4 and 20 mA.

Function

The pressure transmitter measures the gauge pressure of liquids and gases as well as the level of liquids.

Mode of operation

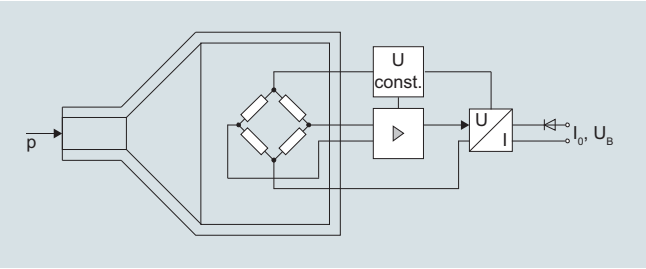

SITRANS P220 pressure transmitters (7MF1567-...), functional diagram

The stainless steel measuring cell has a thick-film resistance bridge to which the operating pressure p is transmitted through a stainless steel diaphragm.

The voltage output from the measuring cell is converted by an amplifier into an output current of 4 to 20 mA or an output voltage of 0 to 10 V DC.

The output current and voltage are linearly proportional to the input pressure.

© Siemens 2020

Technical specifications

Application	
Gauge pressure measurement	Liquids, gases and vapors
Mode of operation	
Measuring principle	Piezoresistive measuring cell (stainless steel diaphragm)
Measured variable	Gauge pressure
Inputs	
Measuring range	
• Gauge pressure	
- Metric	2.5 … 1000 bar (36 … 14500 psi)
- US measuring range	30… 14500 psi
Output	
Current signal	4 ... 20 mA
• Load	(U_B - 10 V)/0.02 A
• Auxiliary power U_B	DC 7 ... 33 V (10 ... 30 V for Ex)
Voltage signal	0 ... 10 V DC
• Load	≥ 10 kΩ
• Auxiliary power U_B	12 ... 33 V DC
• Power consumption	< 7 mA at 10 kΩ
Ratiometric output	0 ... 90 %
• Load	≥ 10 kΩ
• Auxiliary power U_B	5 V DC ± 10 %
• Power consumption	< 7 mA at 10 kΩ
Characteristic curve	Linear rising
Measuring accuracy	
Error in measurement at limit setting incl. hysteresis and reproducibility	• Typical: 0.25 % of measuring span • Maximum: 0.5 % of measuring span
Step response time T_{99}	< 5 ms
Long-term stability	
• Lower range value and measuring span	0.25 % of measuring span/year
Influence of ambient temperature	
• Lower range value and measuring span	0.25 %/10 K of measuring span
• Influence of power supply	0.005 %/V
Operating conditions	
• Process temperature	-40 ... +120 °C (-40 ... +248 °F)
• Ambient temperature	-25 ... +85 °C (-13 ... +185 °F)
• Storage temperature	-50 ... +100 °C (-58 ... +212 °F)
• Degree of protection (to EN 60529)	• IP 65 with connector per EN 175301-803-A • IP 67 with device plug M12 • IP 67 with cable • IP 67 with cable quick screw connection
Electromagnetic compatibility	• acc. IEC 61326-1/-2/-3 • acc. NAMUR NE21, only for ATEX versions and with a max. measuring deviation ≤ 1 %

Design	
Weight	Approx. 0.090 kg (0.198 lb)
Process connections	See dimension drawings
Electrical connections	• Connector per EN 175301-803-A Form A with cable inlet M16x1.5 or ½-14 NPT or Pg 11 • Device plug M12 • 2 or 3-wire (0.5 mm^2) cable (∅ ± 5.4 mm) • Quickon cable quick screw connection
Wetted parts materials	
• Measuring cell	Stainless steel, mat.-No. 1.4016
• Process connection	Stainless steel, mat. No. 1.4404 (SST 316 L)
Non-wetted parts materials	
• Enclosure	Stainless steel, mat. No. 1.4404 (SST 316 L)
• Rack	Plastic
• cables	PVC
Certificates and approvals	
Classification according to pressure equipment directive (PED 2014/68/EU)	For gases of fluid group 1 and liquids of fluid group 1; complies with requirements of article 4, paragraph 3 (sound engineering practice)
Lloyd's Register of Shipping (LR)[1]	12/20010
Germanischer Lloyd (GL)[1]	GL19740 11 HH00
American Bureau of Shipping (ABS)[1]	ABS_11_HG 789392_PDA
Bureau Veritas (BV)[1]	BV 271007A0 BV
Det Norske Veritas (DNV)[1]	A 12553
Drinking water approval (ACS)[1]	ACS 15 ACC NY 360
EAC[1]	№ TC RU C-DE.ГБ05.В.00732 ОС НАНИО «ЦСВЭ»
CRN[2]	0F18659.5C
Underwriters Laboratories (UL)[1]	
• for USA and Canada	UL 20110217 - E34453
• worldwide	IEC UL DK 21845
Explosion protection	
Intrinsic safety "i" (only with current output)	Ex II 1/2 G Ex ia IIC T4 Ga/Gb Ex II 1/2 D Ex ia IIIC T125 °C Da/Db
EC type-examination certificate	SEV 10 ATEX 0146
Connection to certified intrinsically-safe resistive circuits with maximum values:	U_i ≤ 30 V DC; I_i ≤ 100 mA; P_i ≤ 0.75 W
Effective internal inductance and capacity for versions with plugs per EN 175301-803-A and M12	L_i = 0 nH; C_i = 0 nF
CSA[2]	70006348 Class I, Division I, Groups A, B, C and D; Class II, Division 1, Groups E, F and G, Class III Class I, Division 2, Groups A, B, C and D; Class II, Division 2, Groups F and G, Class III A/Ex ia IIC T4 Ga/Gb A/Ex ia IIIC T125°C Da/Db

[1] For variants with output signal 0 ... 5 V and ratiometric output available soon.
[2] See ordering data for available versions.

© Siemens 2020

Selection and ordering data

Article No. | Order code

SITRANS P 220 pressure transmitters for gauge pressure, high-pressure and refrigeration applications, fully-welded version ↗ 7MF1567-■■■■■-■■A■ ■■■

Accuracy typ. 0.25 %

Wetted parts materials: stainless steel

Non-wetted parts materials: stainless steel

↗ Click on the Article No. for the online configuration in the PIA Life Cycle Portal.

Measuring range		Overload limit Minimum		Overload limit Max.		Burst pressure		Order code
For gauge pressure								
0 ... 2.5 bar	(0 ... 36.3 psi)	-1 bar	(-14.5 psi)	6.25 bar	(90.7 psi)	25 bar	(363 psi)	3BD
0 ... 4 bar	(0 ... 58 psi)	-1 bar	(-14.5 psi)	10 bar	(145 psi)	40 bar	(870 psi)	3BE
0 ... 6 bar	(0 ... 87 psi)	-1 bar	(-14.5 psi)	15 bar	(217 psi)	60 bar	(522 psi)	3BG
0 ... 10 bar	(0 ... 145 psi)	-1 bar	(-14.5 psi)	25 bar	(362 psi)	60 bar	(870 psi)	3CA
0 ... 16 bar	(0 ... 232 psi)	-1 bar	(-14.5 psi)	40 bar	(580 psi)	96 bar	(1392 psi)	3CB
0 ... 25 bar	(0 ... 363 psi)	-1 bar	(-14.5 psi)	62.5 bar	(906 psi)	150 bar	(2176 psi)	3CD
0 ... 40 bar	(0 ... 580 psi)	-1 bar	(-14.5 psi)	100 bar	(1450 psi)	240 bar	(3481 psi)	3CE
0 ... 60 bar	(0 ... 870 psi)	-1 bar	(-14.5 psi)	150 bar	(2175 psi)	360 bar	(5221 psi)	3CG
0 ... 100 bar	(0 ... 1450 psi)	-1 bar	(-14.5 psi)	250 bar	(3625 psi)	600 bar	(8702 psi)	3DA
0 ... 160 bar	(0 ... 2320 psi)	-1 bar	(-14.5 psi)	400 bar	(5801 psi)	960 bar	(13924 psi)	3DB
0 ... 250 bar	(0 ... 3625 psi)	-1 bar	(-14.5 psi)	625 bar	(9064 psi)	1500 bar	(21756 psi)	3DD
0 ... 400 bar	(0 ... 5801 psi)	-1 bar	(-14.5 psi)	1000 bar	(14503 psi)	2400 bar	(34809 psi)	3DE
0 ... 600 bar	(0 ... 8702 psi)	-1 bar	(-14.5 psi)	1500 bar	(21755 psi)	3600 bar	(52200 psi)	3DG
0 ... 1000 bar	(0 ... 14500 psi)	-1 bar	(-14.5 psi)	1500 bar	(21755 psi)	5000 bar	(72520 psi)	3EA
Other version, add Order code and plain text: Measuring range: ... up to... bar (psi)								9AA H1Y

Measuring ranges for gauge pressure					Order code
0 ... 30 psi	-14.5 psi	75 psi	360 psi	*	4BE
0 ... 60 psi	-14.5 psi	150 psi	580 psi	*	4BF
0 ... 100 psi	-14.5 psi	250 psi	580 psi	*	4BG
0 ... 150 psi	-14.5 psi	375 psi	870 psi	*	4CA
0 ... 200 psi	-14.5 psi	500 psi	1390 psi	*	4CB
0 ... 300 psi	-14.5 psi	750 psi	2170 psi	*	4CD
0 ... 500 psi	-14.5 psi	1250 psi	3481 psi	*	4CE
0 ... 750 psi	-14.5 psi	1875 psi	5220 psi	*	4CF
0 ... 1000 psi	-14.5 psi	2500 psi	5220 psi	*	4CG
0 ... 1500 psi	-14.5 psi	3750 psi	8700 psi	*	4DA
0 ... 2000 psi	-14.5 psi	5000 psi	13920 psi	*	4DB
0 ... 3000 psi	-14.5 psi	7500 psi	21750 psi	*	4DD
0 ... 5000 psi	-14.5 psi	12500 psi	34800 psi	*	4DE
0 ... 6000 psi	-14.5 psi	15000 psi	34800 psi	*	4DF
0 ... 8700 psi	-14.5 psi	21755 psi	52200 psi	*	4DG
0 ... 14500 psi	-14.5 psi	21755 psi	72520 psi		4EA
Other version, add Order code and plain text: Measuring range: ... up to ... psi					9AA H1Y

Output signal	Order code
4 ... 20 mA; two-wire system; power supply 7 ... 33 V DC (10 ... 30 V DC for ATEX versions)	0
0 ... 10 V; three-wire system; power supply 12 ... 33 V DC	10
0 ... 5 V; 3-wire system; auxiliary power 7 ... 33 V DC	20
Ratiometric 10 ... 90 %; 3-wire system; auxiliary power 5 V DC ± 10 %	30

Explosion protection (only 4 ... 20 mA)	Order code
None	0
With explosion protection Ex ia IIC T4	1

Electrical connection		Order code
Connector per DIN EN 175301-803-A, stuffing box thread M16 (with coupling)	*	1
Device plug M12 per IEC 61076-2-101		2
Connection via fixed mounted cable, 2 m (not for type of protection "Intrinsic safety i")		03
Quickon cable quick screw connection PG9 (not for type of protection "Intrinsic safety i")		04
Connector per DIN EN 175301-803-A, stuffing box thread 1/2"-14 NPT (with coupling)	*	5
Connector per DIN EN 175301-803-A, stuffing box thread PG11 (with coupling)	*	6
Fixed mounted cable, length 5 m		07
Special version		9 N1Y

* Order code E21 required for complete configuration with CRN and $_{c}CSA_{us}$ Ex approval.

© Siemens 2020

Selection and ordering data		Article No.	Order code
SITRANS P 220 pressure transmitters for gauge pressure, high-pressure and refrigeration applications, fully-welded version Accuracy typ. 0.25 % Wetted parts materials: stainless steel Non-wetted parts materials: stainless steel		**7MF1567 -** ■■■■■ **-** ■■	**A** ■ ■■■
Process connection			
G½" male per EN 837-1 (½" BSP male) (standard for metric pressure ranges mbar, bar)			**A**
G½" male thread and G1/8" female thread			**B**
G¼" male per EN 837-1 (¼" BSP male)			**C**
7/16"-20 UNF male			**D**
¼"-18 NPT male (standard for pressure ranges inH_2O and psi)	*		**E**
¼"-18 NPT female			**F**
½"-14 NPT male			**G**
½"-14 NPT female (Only for measuring ranges ≤ 60 bar (870 psi))			**H**
7/16"-20 UNF female			**J**
M20x1.5 male			**P**
G1/4" to DIN 3852 Form E			**Q**
G1/2" to DIN 3852 Form E			**R**
Special version			**Z** **P 1 Y**
Version			
Standard version	*		**1**
Further designs			
Supplement the Article No. with "**-Z**" and add Order code.			
Quality test certificate, 5-point factory calibration (IEC 60770-2) (not possible for measuring ranges > 0 ... 600 bar/0 ... 8 702 psi)		**C11**	
Oxygen version, free of oil and degreased (not in conjunction with explosion protection version)		**E10**	
With CRN and $_cCSA_{us}$ Ex approval (only for measuring ranges 0 ... 30 psi bis 0 ... 8 700 psi)		**E21**	

* Order code E21 required for complete configuration with CRN and$_cCSA_{us}$ Ex approval..

© Siemens 2020

Dimensional drawings

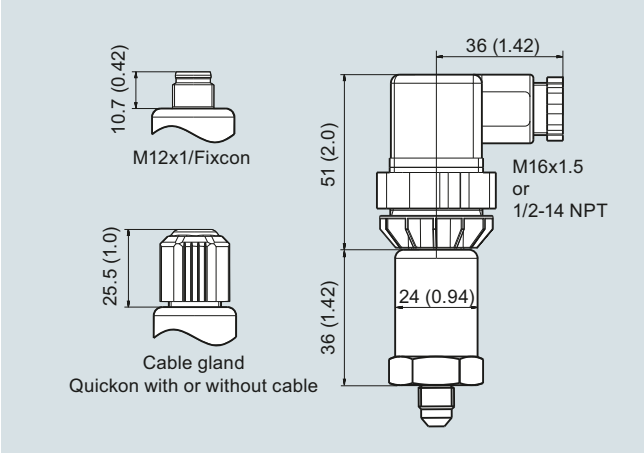

SITRANS P220, electrical connections, dimensions in mm (inch)

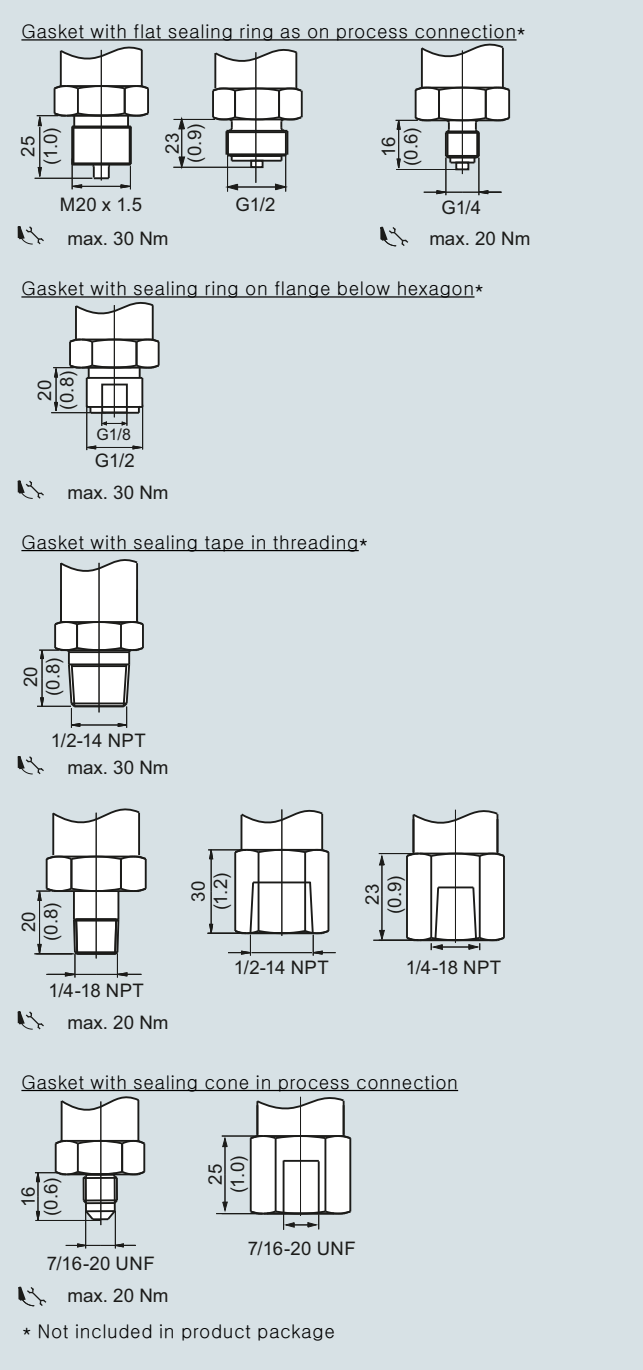

SITRANS P220, process connections, dimensions in mm (inch)

© Siemens 2020

Schematics

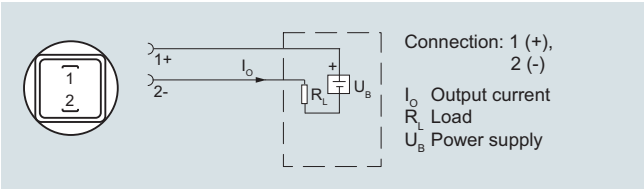

Connection with current output and connector per EN 175301

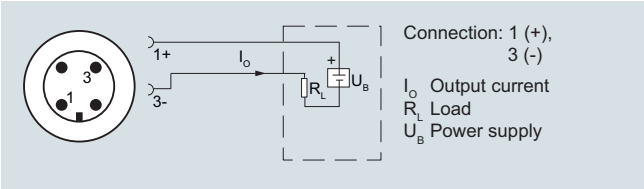

Connection with current output and device plug M12x1

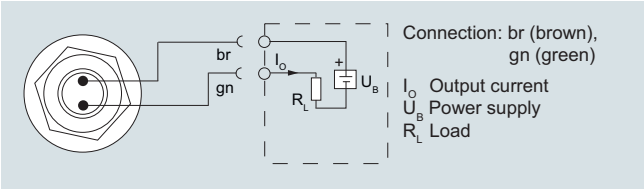

Connection with current output and cable

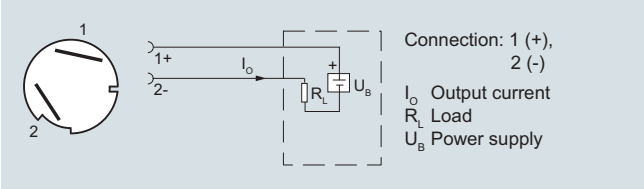

Connection with current output and cable quick screw connection Quick-on

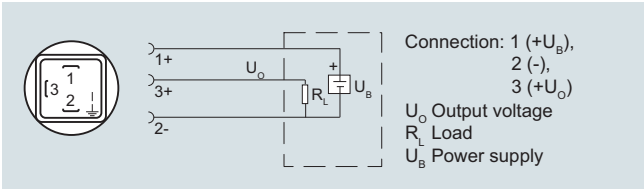

Connection with voltage output, ratiometric output and plug according to EN 175301

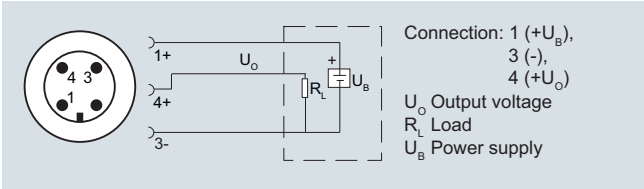

Connection with voltage output, ratiometric output and device plug M12x1

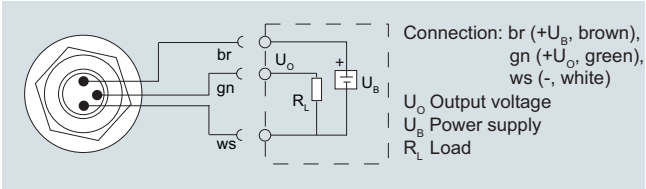

Connection with voltage output, ratiometric output and cable

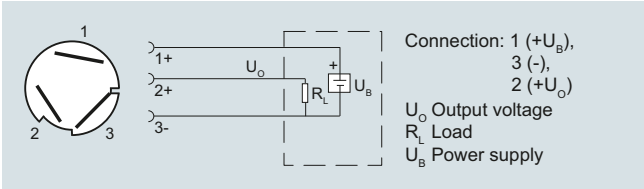

Connection with voltage output, ratiometric output and Quickon fast cable termination

Version with explosion protection: 4 ... 20 mA

The grounding connection is conductively bonded to the transmitter enclosure

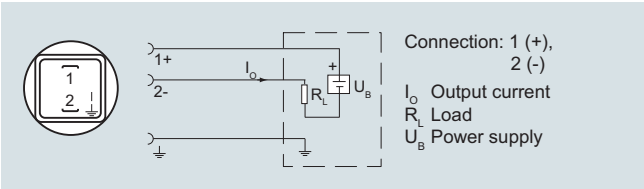

Connection with current output and connector per EN 175301 (Ex)

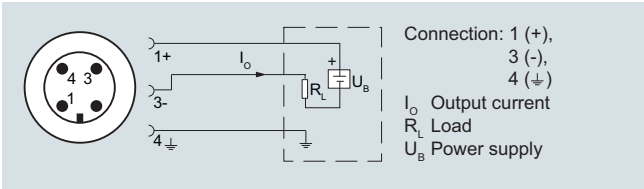

Connection with current output and device plug M12x1 (Ex)

© Siemens 2020

Overview

The pressure transmitter SITRANS LH100 is a submersible sensor for hydrostatic level measurement.

The pressure transmitter measures the liquid levels in tanks, containers, channels and dams. The SITRANS LH100 pressure transmitters are available for various measuring ranges and with explosion protection as an option.

A junction box and a cable hanger are available as accessories for simple installation.

Benefits

- Compact design
- Simple installation
- Small error in measurement (0.3 %)
- Degree of protection IP68

Application

SITRANS LH100 pressure transmitters are used in the following branches, for example:

- Shipbuilding
- Water/waste water supply
- For use in unpressurized/open vessels and wells

Design

The pressure transmitter has a built-in ceramic sensor which is equipped with a Wheatstone resistance bridge.

These pressure transmitters are equipped with an electronic circuit fitted together with the sensor in a stainless steel enclosure. In addition, the connecting cable contains a vent pipe which is equipped with a humidity filter to prevent the build-up of condensation.

The diaphragm is protected against external influences by a protective cap.

The sensor, the electronics and the connecting cable are housed in an enclosure with small dimensions.

The pressure transmitter is temperature-compensated for a wide temperature range.

Function

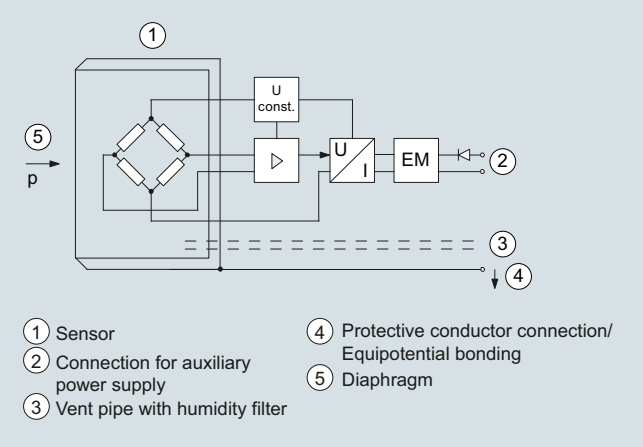

SITRANS LH100 pressure transmitter, mode of operation and connection diagram

On one side of the sensor (1), the diaphragm (5) is exposed to the hydrostatic pressure which is proportional to the submersion depth. This pressure is compared with atmospheric pressure. Pressure compensation is carried out using the vent pipe (3) in the connecting cable. The vent pipe is equipped with a humidity filter which prevents the build-up of condenstation in the vent pipe.

The hydrostatic pressure of the liquid column acts on the diaphragm of the sensor and transmits the pressure to the Wheatstone resistance bridge in the sensor.

The output voltage of the sensor is applied to the electronic circuit where it is converted into an output current of 4 to 20 mA.

The protective conductor connection/equipotential bonding (4) is connected to the enclosure.

Integration

It is generally recommended that the connecting cable of the SITRANS LH100 transmitter is connected to the cable box, which can be ordered separately, and secured with the anchoring clamp, also available separately. The junction box has to be installed near the measuring point.

If the medium is anything other than water, it is also necessary to check compatibility with the specified materials of the transmitter.

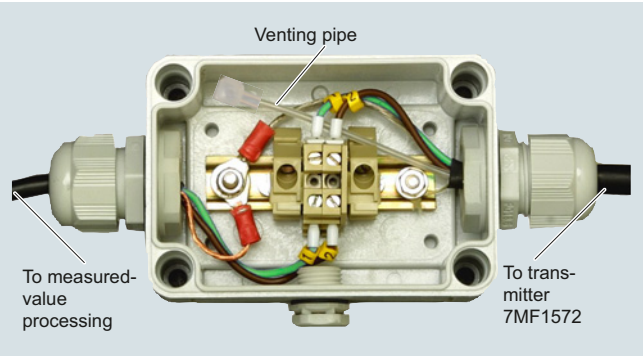

Junction box 7MF1572-8AA, open, schematic diagram

© Siemens 2020

Measuring point setup, generally with junction box 7MF1572-8AA and 7MF1572-8AB cable hanger

Technical specifications

Pressure transmitter SITRANS LH100 (submersible sensor)	
Mode of operation	
Measuring principle	piezo-resistive
Input	
Measured variable	Hydrostatic level
Measuring range	Max. permissible operating pressure
• 0 ... 3 mH_2O (0 ... 9 ftH_2O)	• 1.5 bar (21.8 psi) (corresponds to 15 mH_2O (45 ftH_2O))
• 0 ... 4 mH_2O (0 ... 12 ftH_2O)	• 1.5 bar (21.8 psi) (corresponds to 15 mH_2O (45 ftH_2O))
• 0 ... 5 mH_2O (0 ... 15 ftH_2O)	• 1.5 bar (21.8 psi) (corresponds to 15 mH_2O (45 ftH_2O))
• 0 ... 6 mH_2O (0 ... 18 ftH_2O)	• 1.5 bar (21.8 psi) (corresponds to 15 mH_2O (45 ftH_2O))
• 0 ... 10 mH_2O (0 ... 30 ftH_2O)	• 3.0 bar (43.5 psi) (corresponds to 30 mH2O (90 ftH_2O))
• 0 ... 20 mH_2O (0 ... 60 ftH_2O)	• 5.0 bar (72.5 psi) (corresponds to 50 mH_2O (150 ftH_2O))
• 0 ... 0.3 bar	• 1.5 bar
• 0 ... 0.4 bar	• 1.5 bar
• 0 ... 0.5 bar	• 1.5 bar
• 0 ... 0.6 bar	• 1.5 bar
• 0 ... 1 bar	• 3.0 bar
• 0 ... 2 bar	• 5.0 bar
Output	
Output signal	4 ... 20 mA
Measuring accuracy	According to IEC 60770-1
Error in measurement at limit setting including hysteresis and reproducibility	0.3% of upper range value (typical)
Measuring range	
• 0 ... 3 mH_2O (0 ... 9 ftH_2O bzw. 0 ... 0.3 bar)	0.5 % of upper range value (typical) 1.0% of upper range value (maximum)
• For all other measuring ranges	0.3 % of upper range value (typical) 0.6% of upper range value (maximum)
Influence of ambient temperature	
Measuring range	Zero and span
• 3 mH_2O (9 ftH_2O or 0.3 bar)	0.5 %/10 K of upper range value
• 4 ... 6 mH_2O (12 ... 18 ftH_2O or 0.4…0.6 bar)	0.45 %/10 K of upper range value
• > 6 mH_2O (> 18 ftH_2O or > 0.6 bar)	0.3 %/10 K of upper range value
Long-term stability	
Measuring range	Zero and span
• 3 mH_2O (9 ftH_2O or 0.3 bar)	0.4 % of upper range value/year
• 4 ... 6 mH_2O (12 ... 18 ftH_2O or 0.4…0.6 bar)	0.25% of upper range value/year
• > 6 mH_2O (> 18 ftH_2O or > 0.6 bar)	0.2 % of upper range value/year
Operating conditions	
Ambient conditions	
• Process temperature	-10 ... +80 °C (14 ... 176 °F)
• Storage temperature	-40 ... +80 °C (-40 ... +176 °F)
Degree of protection according to IEC 60529	IP68

© Siemens 2020

Design	
Weight	
• Pressure transmitter	≈ 0.2 kg (≈ 0.44 lb)
• Cable; maximum cable length 100 m (330 ft)	0.025 kg/m (≈ 0.015 lb/ft)
Electrical connection	Cable with 3 conductors, vent pipe and integrated humidity filter
Material	
• Seal diaphragm	Al_2O_3 ceramic, 96%
• Enclosure	Stainless steel, mat. no. 1.4404/316L
• Gasket	FPM (standard) EPDM (optional)
• Connecting cable	PE-HD (standard) PE-LD (in the case of versions with EPDM seal, suitable for drinking water)
Auxiliary power	
Terminal voltage on pressure transmitter U_B	10 ... 33 V DC 10 ... 30 V DC for transmitter with intrinsic safety explosion protection
Certificates and approvals	
Drinking water approval (ACS)	15 ACC NY 360
EAC	№ TC RU C-DE.ГБ05.В.00732 ОС НАНИО «ЦСВЭ»
Underwriters Laboratories (UL)	2014-11-17 - E344532
The transmitter is not subject to the pressure equipment directive (PED 2014/68/EU)	
Explosion protection	
• Intrinsic safety "i"	IECEx SEV 14.0003 SEV 14 ATEX 0109
- Marking	II 1 G Ex ia IIC T4 Ga
• EAC Ex	TC RU C-DE.AA87.B.00324

Junction box	
Application	for connecting the transmitter cable
Design	
Weight	0.2 kg (0.44 lb)
Electrical connection	2 x 3-way (28 to 18 AWG)
Cable entry	2 x Pg 9
Enclosure material	polycarbonate
Vent valve for atmospheric pressure	
Operating conditions	
Degree of protection according to IEC 60529	IP65
Cable hanger	
Application	for mounting the transmitter
Design	
Weight	0.16 kg (0.35 lb)
Material	Galvanized steel, polyamide

© Siemens 2020

SITRANS LH100 Transmitter for hydrostatic level

Selection and ordering data	Article No.	Order code
Pressure transmitter SITRANS LH100 (submersible sensor) ↗	7MF1572- ■■A■■	■■■
For measurement of the hydrostatic level through submersion, two-wire system, 4…20 mA, enclosure material mat. no. 1.4404 (316L), measuring cell Al_2O_3 ceramic, with permanently mounted PE cable		
↗ Click on the Article No. for the online configuration in the PIA Life Cycle Portal.		
Measuring range / **Cable length**		
0 ... 3 mH_2O[1] / 10 m	1C	
0 ... 4 mH_2O / 10 m	1D	
0 ... 5 mH_2O / 10 m	1E	
0 ... 6 mH_2O / 10 m	1F	
0 ... 10 mH_2O / 20 m	1H	
0 ... 20 mH_2O / 30 m	1K	
0 ... 9 ftH_2O[1] / 33 ft	2C	
0 ... 12 ftH_2O / 33 ft	2D	
0 ... 15 ftH_2O / 33 ft	2E	
0 ... 18 ftH_2O / 33 ft	2F	
0 ... 30 ftH_2O / 66 ft	2H	
0 ... 60 ftH_2O / 98 ft	2K	
0 ... 0.3 bar[1] / 10 m	3C	
0 ... 0.4 bar / 10 m	3D	
0 ... 0.5 bar / 10 m	3E	
0 ... 0.6 bar / 10 m	3F	
0 ... 1 bar / 20 m	3H	
0 ... 2 bar / 30 m	3K	
Special versions: Measuring ranges for special versions between 0 ... 3 mH_2O and 0 ... 30 mH_2O or 0 ... 9 ftH_2O and 0 ... 100 ftH_2O or 0 ... 0.3 bar and 0 ... 3 bar possible.		
Special cable lenght/Special measuring range Please add „-Z" to Article No. and specify Order code and plain text. Note: Indication of measuring range Y01 is always necessary.	9A	H..+Y01
For evaluation of the maximum possible cable length following data have to be regarded: Transmitter: C_i = 0 µF, L_i = 0 µH Cable: C_k = 0.19 nF per meter cable L_k = 1.5 µH per meter cable The maximum permitted data of the transmitter's power supply have to be considered!		
3 m (10 ft)		H1A
5 m (16 ft)		H1B
7 m (23 ft)		H1C
10 m (33 ft)		H1D
15 m (49 ft)		H1E
20 m (66 ft)		H1F
25 m (82 ft)		H1G
30 m (98 ft)		H1H
40 m (131 ft)		H1J
50 m (164 ft)		H1K
60 m (198 ft)[1]		H1L
70 m (231 ft)[1]		H1M
80 m (264 ft)[1]		H1N
90 m (297 ft)[1]		H1P
100 m (330 ft)[1]		H1Q

Selection and ordering data	Article No.	Order code
Pressure transmitter SITRANS LH100 (submersible sensor)	7MF1572- ■■A■■	■■■
For measurement of the hydrostatic level through submersion, two-wire system, 4…20 mA, enclosure material mat. no. 1.4404 (316L), measuring cell Al_2O_3 ceramic, with permanently mounted PE cable		
Sealing material between sensor and enclosure		
• FPM (Standard)		1
• EPDM (for drinking water applications)		2
Explosion protection		
• without		0
• With ATEX II1 G Ex ia IIC T4 Ga and IECEx Ex ia IIC T4 Ga		1

Additional versions	Order code
Quality test certificate, 5-point factory calibration (IEC 60770-2), add "**-Z**" to article no. and add order code.	**C11**
Indication of measuring range (only at special cable lengths) in "... to ... mH_2O" or "... to ... ftH_2O" or "... to ... bar"	**Y01**

Accessories/spare parts	Article No.
Junction box for connecting the transmitter cable	**7MF1572-8AA**
Cable hanger for securing the pressure transmitter	**7MF1572-8AB**
Protective caps as spare parts (10-pack)	**7MF1572-8AD**
Humidity filters as spare parts (10-pack)	**7MF1572-8AE**

[1] Approvals pending.

© Siemens 2020

Dimensional drawings

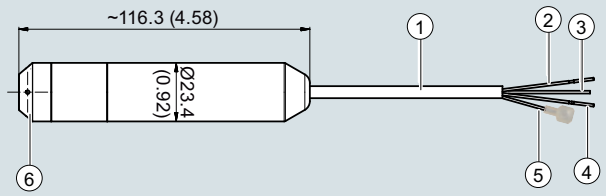

1. Cable, sheat Ø 4.8 (0.19) (black, PE)
2. - (green)
3. + (brown)
4. Protective conductor connection/Equipotential bonding (white)
5. Vent pipe with humidity filter Ø 1 (0.04) (inner diameter)
6. Protective cap with 4 x Ø 2.5 (0.10) holes (black, PPE)

SITRANS LH100 pressure transmitter, dimensions in mm (inch)

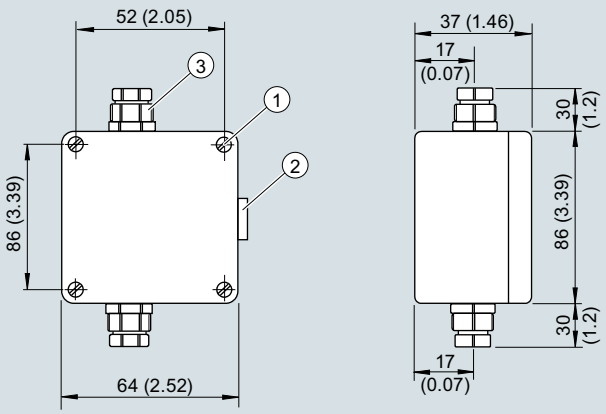

1. Fastening hole
2. Vent valve
3. Cable gland Pg 9, cable diameter 4 ... 8 mm (0.16 ... 0.31)

Junction box, dimensions in mm (inch)

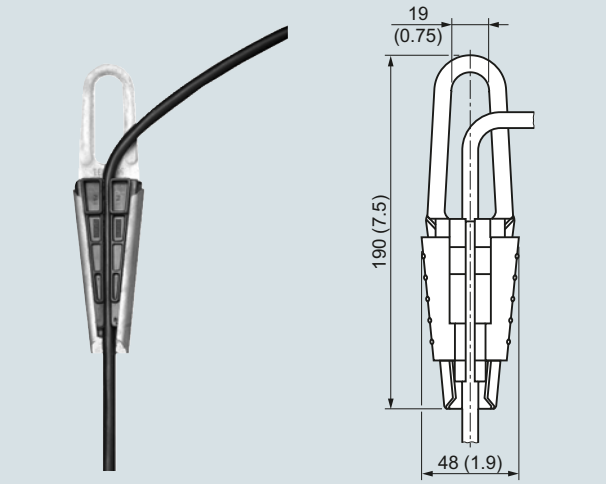

Cable hanger, dimensions in mm (inch)

More information

Establishing the measuring range for water as process medium

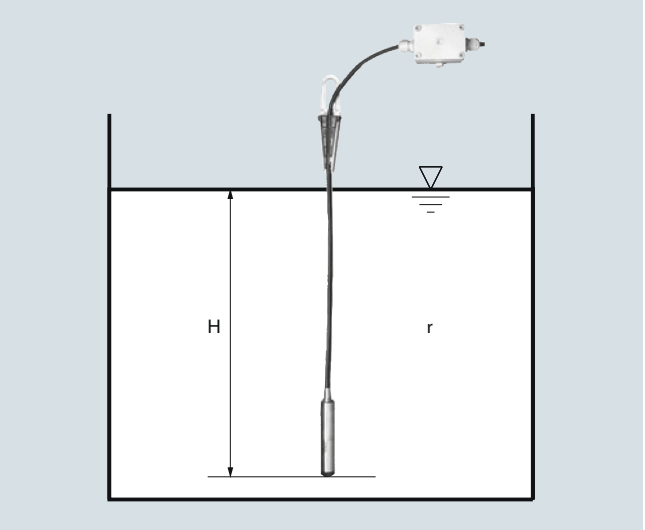

Calculation of the measuring range:

p = ρ x g x H

with:
ρ = density of medium
g = local acceleration due to gravity
H = maximum level

Example:

Medium: Water, ρ = 1 000 kg/m^3
Acceleration due to gravity: 9.81 m/s^2
Lower range value: 0 m
Maximum level: 6.0 m
Cable length: 10 m

Calculation:

p = 1 000 kg/m^3 x 9.81 m/s^2 x 6.0 m
p = 58 860 N/m^2
p = 589 mbar

Transmitter to be ordered:
7MF1572-1FA10
Plus, if required, junction box 7MF1572-8AA and cable hanger 7MF1572-8AB

© Siemens 2020

Overview

The pressure transmitter SITRANS LH300 is a submersible sensor for hydrostatic level measurement with cap made of PPE (left), stainless steel (mid) and ETFE (right).

The pressure transmitter measures the liquid levels in tanks, containers, channels and dams. The SITRANS LH300 pressure transmitters are available for various measuring ranges and with explosion protection as an option.

A junction box and a cable hanger are available as accessories for simple installation.

Benefits

- Compact design
- Simple installation
- Small error in measurement (0.15 % typical)
- Degree of protection IP68

Application

SITRANS LH300 pressure transmitters are used in the following branches, for example:

- Shipbuilding
- Water/waste water supply
- Drinking water facilities
- For use in unpressurized/open vessels and wells
- Desalination plants

Design

The pressure transmitter has a built-in ceramic sensor which is equipped with a Wheatstone resistance bridge.

These pressure transmitters are equipped with an electronic circuit fitted together with the sensor in a stainless steel enclosure. In addition, the connecting cable contains a vent pipe which is equipped with a humidity filter to prevent the build-up of condensation.

The diaphragm is protected against external influences by a protective cap.

The sensor, the electronics and the connecting cable are housed in an enclosure with small dimensions.

The pressure transmitter is temperature-compensated for a wide temperature range.

Function

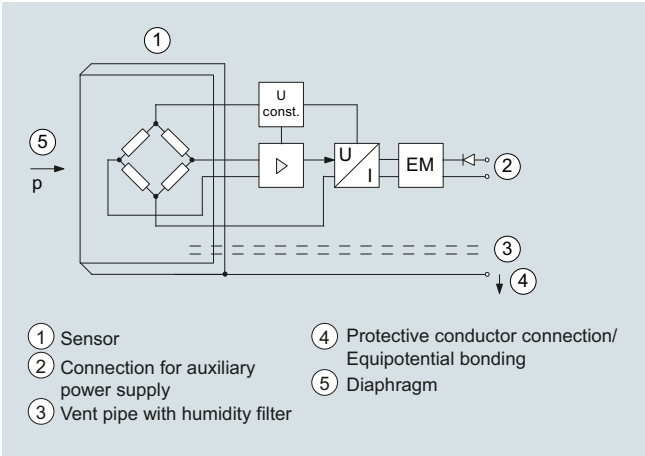

SITRANS LH300 pressure transmitter, mode of operation and connection diagram

On one side of the sensor (1), the diaphragm (5) is exposed to the hydrostatic pressure which is proportional to the submersion depth. This pressure is compared with atmospheric pressure. Pressure compensation is carried out using the vent pipe (3) in the connecting cable. The vent pipe is equipped with a humidity filter which prevents the build-up of condensation in the vent pipe.

The hydrostatic pressure of the liquid column acts on the diaphragm of the sensor and transmits the pressure to the Wheatstone resistance bridge in the sensor.

The output voltage of the sensor is applied to the electronic circuit where it is converted into an output current of 4 to 20 mA.

The protective conductor connection/equipotential bonding (4) is connected to the enclosure.

Integration

It is generally recommended that the connecting cable of the SITRANS LH300 transmitter is connected to the cable box, which can be ordered separately, and secured with an anchoring clamp, also available separately. The cable plug is to be installed near the measuring point, but outside the medium.

Likewise, in the case of media other than water the compatibility with the specified materials of the transmitter, cable and seal must be checked.

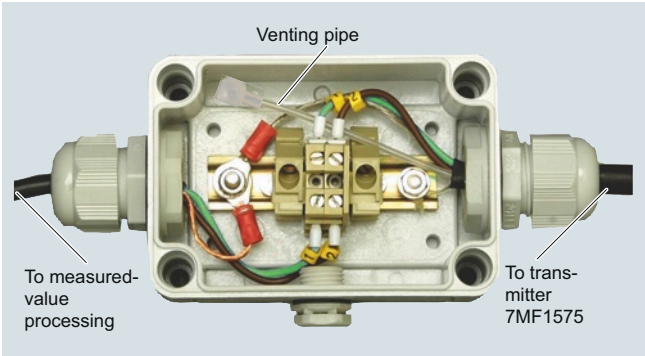

Junction box 7MF1575-8AA, open, schematic diagram

© Siemens 2020

Measuring point setup, generally with junction box 7MF1575-8AA and 7MF1575-8AB cable hanger

Technical specifications

Pressure transmitter SITRANS LH300 (submersible sensor)	
Mode of operation	
Measuring principle	Piezo-resistive
Input	
Measured variable	Hydrostatic level
Measuring range	Max. permissible operating pressure
• 0 ... 1 mH_2O (0 ... 3 ftH_2O)	• 1.5 bar (21.8 psi) (corresponds to 15 mH_2O (45 ftH_2O))
• 0 ... 2 mH_2O (0 ... 6 ftH_2O)	• 1.5 bar (21.8 psi) (corresponds to 15 mH_2O (45 ftH_2O))
• 0 ... 3 mH_2O (0 ... 9 ftH_2O)	• 1.5 bar (21.8 psi) (corresponds to 15 mH_2O (45 ftH_2O))
• 0 ... 4 mH_2O (0 ... 12 ftH_2O)	• 2 bar (29 psi) (corresponds to 20 mH_2O (60 ftH_2O))
• 0 ... 5 mH_2O (0 ... 15 ftH_2O)	• 2 bar (29 psi) (corresponds to 20 mH_2O (60 ftH_2O))
• 0 ... 6 mH_2O (0 ... 18 ftH_2O)	• 2 bar (29 psi) (corresponds to 20 mH_2O (60 ftH_2O))
• 0 ... 10 mH_2O (0 ... 30 ftH_2O)	• 5 bar (72.5 psi) (corresponds to 50 mH2O (150 ftH_2O))
• 0 ... 20 mH_2O (0 ... 60 ftH_2O)	• 10 bar (145 psi) (corresponds to 100 mH_2O (300 ftH_2O))
• 0 ... 40 mH_2O (0 ... 120 ftH_2O)	• 20 bar (290 psi) (corresponds to 200 mH_2O (600 ftH_2O))
Special measuring ranges	
• Up to 100 mH_2O (300 ftH_2O)	• 20 bar (290 psi) (corresponds to 200 mH_2O (600 ftH_2O))
• Up to 160 mH_2O (480 ftH_2O)	• 24 bar (348 psi) (corresponds to 240 mH_2O (720 ftH_2O))
Measuring range	
• 0 ... 0.1 bar	• 1.5 bar
• 0 ... 0.2 bar	• 1.5 bar
• 0 ... 0.3 bar	• 1.5 bar
• 0 ... 0.4 bar	• 2 bar
• 0 ... 0.5 bar	• 2 bar
• 0 ... 0.6 bar	• 2 bar
• 0 ... 1 bar	• 5 bar
• 0 ... 2 bar	• 10 bar
• 0 ... 4 bar	• 20 bar
Special measuring range	
• Up to 10 bar	• 20 bar
• Up to 16 bar	• 24 bar
Output	
Output signal	4 ... 20 mA
Measuring accuracy	According to IEC 60770-1
Error in measurement at limit setting including hysteresis and reproducibility	≤ 0.15 % of upper range value (typical)
	≤ 0.3 % of upper range value (maximum)
Influence of ambient temperature	≤ 0.05 %/10 K of upper range value (zero and span)
Long-term stability	≤ 0.15 % of upper range value/year (zero and span)
Operating conditions	
Ambient conditions	
• Process temperature	-10 ... +80 °C (14 ... 176 °F)
• Storage temperature	-20 ... +80 °C (-4 ... +176 °F)
Degree of protection according to IEC 60529	IP68

© Siemens 2020

Design	
Weight	
• Pressure transmitter	≈ 0.4 kg (≈ 0.88 lb)
• Cable	0.08 kg/m (≈ 0.059 lb/ft)
Maximal freely suspended length	300 m (990 ft)
Electrical connection	Cable with 2 conductors, vent pipe and integrated humidity filters
Material	
• Seal diaphragm	Al_2O_3 ceramic, 99.6 %
• Enclosure	Stainless steel, mat. no. 1.4404/316L and 1.4539/904L (sea water applications) respectively
• Gasket	FPM (standard)
	EPDM (optional)
• Connecting cable	PE (standard/drinking water applications)
	FEP (for aggressive media)
• Cap	Stainless steel, PPE or ETFE
Auxiliary power	
Terminal voltage on pressure transmitter U_B	10 ... 33 V DC for transmitter without explosion protection
	10 ... 30 V DC for transmitter with intrinsic safety explosion protection
Certificates and approvals	
Drinking water approval (ACS)	17 ACC NY 055
EAC	TC N RU Д-DE.ГА02.B.05092
Underwriters Laboratories (UL)	ML File No. E344532, issued 2017-08-17
Shipbuilding approval (LR)	LR_18/20074
Shipbuilding approval (DNV/GL)	TAA00000CE
Shipbuilding approval (BV)	56926/A0 BV
Shipbuilding approval (ABS)	HG1881314_P
Shipbuilding approval (RINA)	ELE067319XG
Pressure equipment directive	The transmitter is not subject to the pressure equipment directive (PED 2014/68/EU)
Explosion protection	
• ATEX	SEV 16 ATEX 0121
• IEC Ex	IEC Ex SEV 16.0003
• EAC Ex	TC RU C-DE.AA87.B.00324
• Intrinsic safety "i"	
- Marking	II 1 G Ex ia IIC T4 Ga

Junction box	
Application	For connecting the transmitter cable
Design	
Weight	0.2 kg (0.44 lb)
Electrical connection	2 x 3-way (28 to 18 AWG)
Cable entry	2 x PG 13.5
Enclosure material	Polycarbonate
Vent valve for atmospheric pressure	
Operating conditions	
Degree of protection according to IEC 60529	IP65
Cable hanger	
Application	For mounting the transmitter
Design	
Weight	0.16 kg (0.35 lb)
Material	Galvanized steel, polyamide
Terminal area	For cable with a diameter of 5.5 ... 9.5 mm

© Siemens 2020

Selection and ordering data	Article No.	Order code
Pressure transmitter SITRANS LH300 (submersible sensor) ↗	7MF1575-	

For hydrostatic level measurement, submersible transmitter, two-wire connection, 4 … 20 mA, enclosure material see Order option, measuring cell Al_2O_3 ceramics (99.6 % purity), with fixed mounted cable, material of protective cap at PE cable: PPE (colour black)
material of protective cap at FEP cable: PPE (colour white)

Note: junction box and cable hanger have to be ordered separately.

↗ Click on the Article No. for the online configuration in the PIA Life Cycle Portal.

Measuring range	Cable length (PE cable)	Article No.
0 ... 1 mH_2O	5 m	1 A
0 ... 2 mH_2O	5 m	1 B
0 ... 3 mH_2O	10 m	1 C
0 ... 4 mH_2O	10 m	1 D
0 ... 5 mH_2O	10 m	1 E
0 ... 6 mH_2O	10 m	1 F
0 ... 10 mH_2O	20 m	1 H
0 ... 20 mH_2O	30 m	1 K
0 ... 40 mH_2O	50 m	1 L
0 ... 3 ftH_2O	5 m (≈ 15 ft)	2 A
0 ... 6 ftH_2O	5 m (≈ 15 ft)	2 B
0 ... 9 ftH_2O	10 m (≈ 30 ft)	2 C
0 ... 12 ftH_2O	10 m (≈ 30 ft)	2 D
0 ... 15 ftH_2O	10 m (≈ 30 ft)	2 E
0 ... 18 ftH_2O	10 m (≈ 30 ft)	2 F
0 ... 30 ftH_2O	20 m (≈ 60 ft)	2 H
0 ... 60 ftH_2O	30 m (≈ 90 ft)	2 K
0 ... 120 ftH_2O	50 m (≈ 150 ft)	2 L
0 ... 0.1 bar	5 m	3 A
0 ... 0.2 bar	5 m	3 B
0 ... 0.3 bar	10 m	3 C
0 ... 0.4 bar	10 m	3 D
0 ... 0.5 bar	10 m	3 E
0 ... 0.6 bar	10 m	3 F
0 ... 1 bar	20 m	3 H
0 ... 2 bar	30 m	3 K
0 ... 4 bar	50 m	3 L

Special versions:

Measuring ranges for special versions between
0 ... 1 mH_2O and 0 ... 160 mH_2O or
0 ... 3 ftH_2O and 0 ... 530 ftH_2O or
0 ... 0.1 bar and 0 ... 16 bar possible.

Selection and ordering data	Article No.	Order code
Pressure transmitter SITRANS LH300 (submersible sensor)	7MF1575-	
PE cable for general purpose and drinking water applications		
Special cable length Please add „-Z" to Article No. and specify Order code and plain text: Y01: Cable length	9 X	H . . + Y 0 1
3 m (≈ 10 ft)		H 1 A
5 m (≈ 16 ft)		H 1 B
7 m (≈ 23 ft)		H 1 C
10 m (≈ 33 ft)		H 1 D
15 m (≈ 50ft)		H 1 E
20 m (≈ 65 ft)		H 1 F
25 m (≈ 80 ft)		H 1 G
30 m (≈ 100 ft)		H 1 H
40 m (≈ 130 ft)		H 1 J
50 m (≈ 160 ft)		H 1 K
60 m (≈ 200 ft)		H 1 L
70 m (≈ 230 ft)		H 1 M
80 m (≈ 265 ft)		H 1 N
90 m (≈ 295 ft)		H 1 P
100 m (≈ 330 ft)		H 1 Q
125 m (≈ 410 ft)		H 1 R
150 m (≈ 495 ft)		H 1 S
175 m (≈ 575 ft)		H 1 T
200 m (≈ 650 ft)		H 1 U
225 m (≈ 740 ft)		H 1 V
250 m (≈ 820 ft)		H 1 W
275 m (≈ 900 ft)		H 1 X
300 m (≈ 990 ft)		H 2 A
350 m (≈ 1150 ft)		H 2 B
400 m (≈ 1320 ft)		H 2 C
450 m (≈ 1480 ft)		H 2 D
500 m (≈ 1650 ft)		H 2 E
550 m (≈ 1815 ft)		H 2 F
600 m (≈ 1980 ft)		H 2 G
650 m (≈ 2145 ft)		H 2 H
700 m (≈ 2310 ft)		H 2 J
750 m (≈ 2475 ft)		H 2 K
800 m (≈ 2640 ft)		H 2 L
850 m (≈ 2800 ft)		H 2 M
900 m (≈ 2970 ft)		H 2 N
950 m (≈ 3135 ft)		H 2 P
1000 m (≈ 3300 ft)		H 2 Q
Other special cable length Please add „-Z" to Article No. and specify Order codes and plain text: H1Y: Cable length ..... Y01: Measuring range	9 X	H 1 Y + Y 0 1

© Siemens 2020

Selection and ordering data	Article No.	Order code
Pressure transmitter SITRANS LH300 (submersible sensor)	**7MF1575-**	
FEP cable for aggressive media		
Special cable length Please add „-Z" to Article No. and specify Order code and plain text: Y01: Cable length	**9X**	**H..** **+** **Y01**
3 m (≈ 10 ft)		**H5A**
5 m (≈ 16 ft)		**H5B**
7 m (≈ 23 ft)		**H5C**
10 m (≈ 33 ft)		**H5D**
15 m (≈ 50ft)		**H5E**
20 m (≈ 65 ft)		**H5F**
25 m (≈ 80 ft)		**H5G**
30 m (≈ 100 ft)		**H5H**
40 m (≈ 130 ft)		**H5J**
50 m (≈ 160 ft)		**H5K**
60 m (≈ 200 ft)		**H5L**
70 m (≈ 230 ft)		**H5M**
80 m (≈ 265 ft)		**H5N**
90 m (≈ 295 ft)		**H5P**
100 m (≈ 330 ft)		**H5Q**
125 m (≈ 410 ft)		**H5R**
150 m (≈ 495 ft)		**H5S**
175 m (≈ 575 ft)		**H5T**
200 m (≈ 650 ft)		**H5U**
225 m (≈ 740 ft)		**H5V**
250 m (≈ 820 ft)		**H5W**
275 m (≈ 900 ft)		**H5X**
300 m (≈ 990 ft)		**H6A**
350 m (≈ 1150 ft)		**H6B**
400 m (≈ 1320 ft)		**H6C**
450 m (≈ 1480 ft)		**H6D**
500 m (≈ 1650 ft)		**H6E**
550 m (≈ 1815 ft)		**H6F**
600 m (≈ 1980 ft)		**H6G**
650 m (≈ 2145 ft)		**H6H**
700 m (≈ 2310 ft)		**H6J**
750 m (≈ 2475 ft)		**H6K**
800 m (≈ 2640 ft)		**H6L**
850 m (≈ 2800 ft)		**H6M**
900 m (≈ 2970 ft)		**H6N**
950 m (≈ 3135 ft)		**H6P**
1000 m (≈ 3300 ft)		**H6Q**
Other special cable length Please add „-Z" to Article No. and specify Order codes and plain text: H1Y: Cable length ..... Y01: Measuring range	**9X**	**H5Y** **+** **Y01**

Selection and ordering data		Article No.	Order code
Pressure transmitter SITRANS LH300 (submersible sensor)		**7MF1575-**	
Enclosure material	**Material of protective cap**		
Stainless steel 316L (1.4404)	Protective capability made of PPE (recommended for PE cable)	**A**	
Stainless steel 316L (1.4404)	Protective cap made of ETFE (standard with FEP cable)	**B**	
Stainless steel 316L (1.4404)	Stainless steel 316L (1.4404)	**C**	
Stainless steel 904L (1.4539) for sea water applications	Protective cap PPE	**D**	
Stainless steel 904L (1.4539) for sea water applications	Protective cap ETFE	**E**	
Stainless steel 904L (1.4539) for seawater applications	Stainless steel 904L (1.4539) for seawater applications	**F**	
Sealing material between sensor and enclosure			
FPM (Standard)		**1**	
EPDM (for drinking water)		**2**	
Explosion protection			
without		**0**	
With ATEX II1 G Ex ia IIC T4 Ga, IECEx Ex ia IIC T4 Ga and EAC Ex (only possible for cable length ≤ 300 m (990 ft)		**1**	
Additional versions			Order code
Quality test certificate, 5-point factory calibration (IEC 60770-2)			**C11**
Accessories/spare parts			Article No.
Junction box			**7MF1575-8AA**
Cable hanger			**7MF1575-8AB**
Protective caps, PPE, as spare part (10-pack)			**7MF1575-8AD**
Protective caps, ETFE, as spare part (10-pack)			**7MF1575-8AE**
Humidity filters as spare part (10-pack)			**7MF1575-8AF**
Protective cap, stainless steel 316L (1.4404) for waste water applications			**7MF1575-8AG**
Protective cap, stainless steel 904L (1.4539) for sea water applications			**7MF1575-8AH**

© Siemens 2020

Dimensional drawings

Sensor with protective cap (PPE, ETFE)

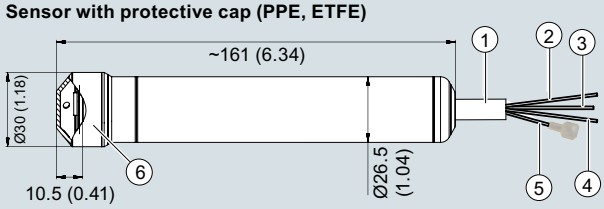

Sensor with protective cap (stainless steel)

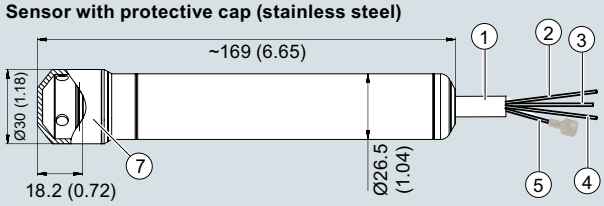

1. Cable, sheat Ø 8.3 (0.33)
2. - (blue)
3. + (brown)
4. Protective conductor connection/Equipotential bonding (black)
5. Vent pipe with humidity filter Ø 1 (0.04) (inner diameter)
6. Protective cap (PPE or PTFE) with 4 x Ø 2.5 (0.10) holes
7. Protective cap (stainless steel) with 4 x Ø 5 (0.20) holes

SITRANS LH300 pressure transmitter, dimensions in mm (inch)

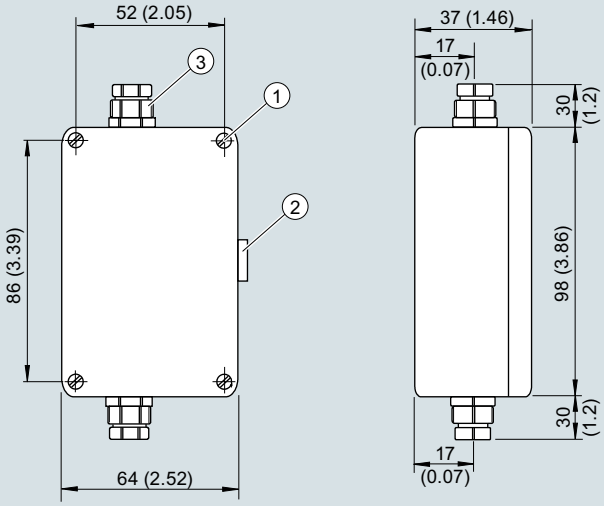

1. Fastening hole
2. Vent valve
3. Cable gland Pg 13.5, cable diameter 6 ... 12 (0.23 ... 0.47)

Junction box, dimensions in mm (inch)

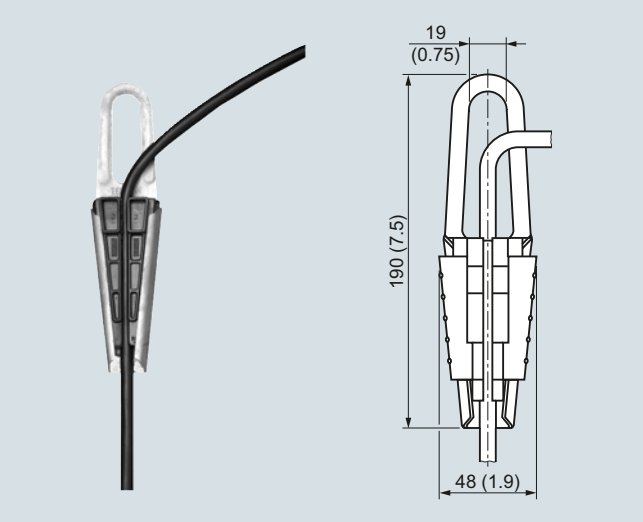

Cable hanger, dimensions in mm (inch)

More information

Determination of the measuring range for medium water

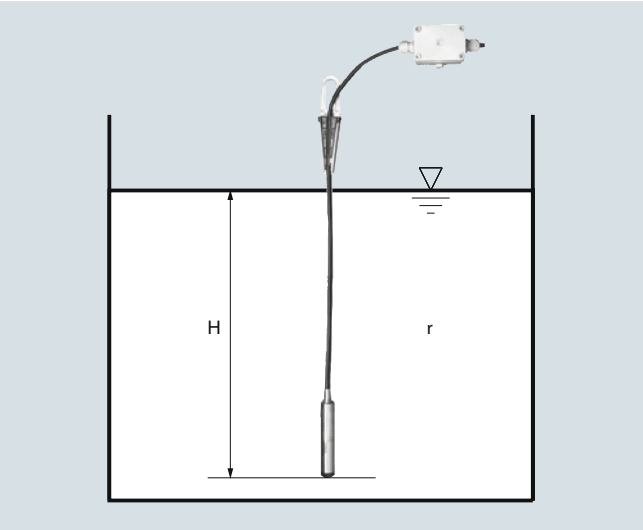

Calculation of the measuring range:

p = ρ x g x H

with:
ρ = density of medium
g = local acceleration due to gravity
H = maximum level

Example:

Medium: Water, ρ = 1 000 kg/m^3
Acceleration due to gravity: 9.81 m/s^2
Lower range value: 0 m
Maximum level: 6.0 m
Cable length: 10 m

Calculation:

p = 1 000 kg/m^3 x 9.81 m/s^2 x 6.0 m
p = 58 860 N/m^2
p = 589 mbar

Transmitter to be ordered:
7MF1575-1FA10
Plus, if required, junction box 7MF1575-8AA and cable hanger 7MF1575-8AB

© Siemens 2020

Overview

The SITRANS P Compact pressure transmitter is designed for the special requirements of the food, pharmaceutical and biotechnology industries.

The use of high-grade materials guarantees compliance with hygiene regulations.

Particular value has been placed on a high surface quality. The system can be electropolished in addition.

A further important feature is the hygiene-based design of the process connection by means of various aseptic connections.

The completely welded stainless steel enclosure can be designed up to degree of protection IP67.

Using appropriate thermal decouplers, the SITRANS P Compact pressure transmitter can be used for process temperatures up to 200 °C (392 °F).

Benefits

- Measuring ranges from 0 to 160 mbar (0 to 2.32 psi) to 0 to 40 bar (0 to 580 psi)
- Linearity error including hysteresis < +0.2 % of the end value
- Piezo-resistive measurement system, vacuum-proof and overload-proof
- Hygiene-based design according to EHEDG, FDA and GMP recommendations
- Material and surface quality according to hygiene requirements
- Wetted parts made of stainless steel; completely welded
- Signal output 4 to 20 mA (0 to 20 mA as option)
- Stainless steel enclosure with degree of protection IP65 (IP67 as option)
- Process temperature up to 200 °C (392 °F)
- Explosion protection II 2G Ex [ib] IIC T6 to ATEX
- Easy and safe to clean

Application

The SITRANS P Compact pressure transmitter is designed for the special requirements of the food, pharmaceutical and biotechnology industries.

The use of high-grade materials guarantees compliance with hygiene regulations.

The SITRANS P Compact pressure transmitter is available in many versions. Exact adaptation of the pressure transmitter to conditions at the place of use is thus possible

Design

The electronics is potted to protect it against moisture, corrosive atmospheres and vibration.

Notes on operating the pressure transmitter

Compensation of internal atmospheric pressure

Compensation of the internal atmospheric pressure of the SITRANS P Compact pressure transmitters is performed as follows:

- in the plug versions by means of the screwed gland (IP65)
- in the field enclosures by means of an integral sintered filter (IP65) or a vented cable (IP67)
- in versions with cable outlet by means of a vented cable (IP67)

In the absolute pressure range there is no need for compensation with respect to atmospheric pressure.

Note: These degrees of protection are only achieved under the following conditions:

- if the pressure transmitter is installed correctly
- if the screwed glands are securely tightened
- if the cable diameters agree with the nominal diameters of the gaskets in the enclosure

Note: The integral EMC measures are only effective if the earth connection is made correctly.

CE marking

The CE marking of the pressure transmitter certifies compliance with the guidelines of the European Council (9/336/EC), the EMC law (13.11.1992), as well as the applicable generic standards.

Interference-free operation in systems and plants is achieved only if the specifications for shielding, earthing, cable routing and electrical isolation are observed during installation and assembly.

Hazardous areas

Note: Electrical equipment in hazardous areas must only be installed and operated by trained personnel.

Modifications to units and connections result in cancellation of the explosion protection and guarantee.

With intrinsically-safe circuits, make sure that equipotential bonding exists throughout the complete cabling inside and outside of the hazardous area. The limits specified in the ATEX approval must be observed.

© Siemens 2020

Function

The process pressure acts on a piezo-resistive semiconductor measuring bridge through a remote seal and a transmission liquid. The pressure transmitter converts the pressure values into a load-independent current.

A compensation network makes the output signal largely independent of the ambient temperature. As a result of a specially adapted remote seal connection with minimized volume, the influence of the process temperature on the output signal is greatly reduced compared to a conventional screw connection.

The pressure transmitters can be powered with a non-regulated DC voltage of 10 to 30 V. Output signals common to measuring technology are available.

Technical specifications

Pressure transmitters for food, pharmaceuticals and biotechnology	
Mode of operation	
Measuring principle	piezo-resistive
Input	
Measured variable	gauge or absolute pressure
Measuring range	0 ... 160 mbar (0 ... 2.32 psi) ... 0 ... 40 bar (0 ... 580 psi)
Output	
Output signal	
• 2-wire system	4 ... 20 mA
• Three-wire system	0 ... 20 mA
Measuring accuracy	Acc. to IEC 60770-1
Error in measurement at limit setting incl. hysteresis and reproducibility	≤ 0.2 % of upper range value
Adjustment accuracy	≤ ± 0.2 % of upper range value
Step response time	< 20 ms
Influence of ambient temperature	
On the enclosure	
• Zero point	< 0.2 %/10 K of upper range value
• Measuring span	< 0.2 %/10 K of upper range value
On the process connection (remote seals)	Zero error (depends on design)
• Flange remote seal	
- DN 25 / 1"	4.8 mbar/10 K (0.069 psi/10 K)
- DN 32 / 1¼"	2.3 mbar/10 K (0.033 psi/10 K)
- DN 40 / 1½"	1.6 mbar/10 K (0.023 psi/10 K)
- DN 50 / 2"	0.6 mbar/10 K (0.009 psi/10 K)
• Inline seal	
- DN 25 / 1"	9.5 mbar/10 K (0.14 psi/10 K)
- DN 32 / 1¼"	4.1 mbar/10 K (0.06 psi/10 K)
- DN 40 / 1½"	3.9 mbar/10 K (0.05 psi/10 K)
- DN 50 / 2"	3.9 mbar/10 K (0.05 psi/10 K)

The zero error specified for the process connection should be considered as a guideline for a standard design. We will produce a detailed system calculation on request. Systems with reduced remote seal errors are available on request.

Operating conditions	
Installation conditions	
• Mounting position	Any, vertical as standard
Ambient conditions	
• Ambient temperature	-10 ... +70 °C (14 ... 158 °F)
• Storage temperature	-10 ... +90 °C (14 ... 194 °F)
• Process temperature	Max. 200 °C (392 °F), depending on design
Vacuum-resistant	0 mbar (0 psi) absolute at max. 50 °C. Higher process temperatures on request.
• Degree of protection (to EN 60529)	IP65, optional IP67
• Electromagnetic Compatibility	
- Emitted interference	To EN 50081 Part 1, issue 1993 (residential and industrial areas). The unit has no own emissions.
- Noise immunity to	EN 50082 Part 2, issue March 1995 (industrial areas)
Design	
Weight (without remote seal)	
• Field enclosure	≈ 460 G (≈ 1.01 (lb)
• Enclosure with plug	≈ 200 g (≈ 0.44 lb)
Enclosure	
• Designs	• Field enclosure IP65 or IP67, with screwed gland • Angled plug DIN 43650, IP65 • Cable connection, IP67 • Device plug M12, IP65
• Material	Stainless steel, mat. no. 1.4404/316L/1.4305
Material of union nut	Polyamide (with electrical connection using plug or cable)
	Electronics unit potted with silicone
	Internal ventilation for measuring ranges < 16 bar (< 232 psi), through enclosure thread or connection cable depending on design
Process connection	
• Versions	See ordering data
• Material of coupling	Stainless steel, mat. no. 1.4404/316L
Power supply	
Terminal voltage on transmitter	10 ... 30 V DC
Rated voltage	24 V DC
Certificates and approvals	
Classification according to pressure equipment directive (PED 2014/68/EU)	
• For 7MF8010-1... (with diaphragm seal)	For gases of fluid group 1 and liquids of fluid group 1; complies with requirements of article 4, paragraph 3 (sound engineering practice)
• For 7MF8010-2... (with inline seal)	For gases of fluid group 1 and liquids of fluid group 1; complies with the requirements of article 4, paragraph 1 (appendix 1); assigned to category III, conformity evaluation module H by the TÜV Nord
Explosion protection	
• Intrinsic safety "i"	TÜV 03 ATEX 2099 X
- Marking	Ex II 2G Ex ib IIC T6

© Siemens 2020

Selection and Ordering data	Article No.	Ord. code
SITRANS P Compact pressure transmitters for pressure and absolute pressure with diaphragm flush at front ↗	7MF8010-	
2-wire system Process temperature up to 140 °C (284 °F) Accuracy: 0.2 % of upper range value Output 4 ... 20 mA	1 ■■■■ - ■■■■	■■■
↗ Click on the Article No. for the online configuration in the PIA Life Cycle Portal.		
Diaphragm seal with quick-release clamp		
Milk pipe union to DIN 11851 with slotted union nut		
• DN 25	AD	
• DN 32	AE	
• DN 40	AF	
• DN 50	AG	
• DN 65	AH	
Milk pipe union to DIN 11851 with threaded socket		
• DN 25	BD	
• DN 32	BE	
• DN 40	BF	
• DN 50	BG	
• DN 65	BH	
Clamp connection to DIN 32676		
• DN 25	CD	
• DN 40	CF	
• DN 50	CG	
Clamp connection to ISO 2852		
• 1 inch	DM	
• 1½ inch	DN	
• 2 inch	DP	
• 2½ inch	DQ	
IDF standard with slotted union nut		
• 1 inch	EM	
• 1½ inch	EN	
• 2 inch	EP	
IDF standard with threaded socket		
• 1 inch	FM	
• 1½ inch	FN	
• 2 inch	FP	
SMS standard with slotted union nut		
• 1 inch	GM	
• 1½ inch	GN	
• 2 inch	GP	
SMS standard with threaded socket		
• 1 inch	HM	
• 1½ inch	HN	
• 2 inch	HP	
DRD flange, without welding-type flange		
• DN 50, PN 40	JH	
Varivent connection (Tuchenhagen)		
• D = 50, for Varivent enclosure DN 25 and 1 inch	KF	
• D = 68, for Varivent enclosure DN 40 ... DN 125 and 1½ ... 6 inch	KL	
Special version (add Order code and plain text)	ZA	J1Y
Filling liquid		
Food oil, FDA-listed	3	
Special version (add Order code and plain text)	9	L1Y
Output signal		
4 ... 20 mA	1	
Special version (add Order code and plain text)	9	M1Y

Selection and Ordering data	Article No.	Ord. code
SITRANS P Compact pressure transmitters for pressure and absolute pressure with diaphragm flush at front	7MF8010-	
2-wire system Process temperature up to 140 °C (284 °F) Accuracy: 0.2 % of upper range value Output 4 ... 20 mA	1 ■■■■ - ■■■■	■■■
Diaphragm seal with aseptic connection		
Aseptic screwed gland to DIN 11864-1, form A, with slotted union nut		
• 1 inch	PM	
• 1½ inch	PN	
• 2 inch	PP	
• 2½ inch	PQ	
Aseptic screwed gland to DIN 11864-1, form A with threaded socket		
• 1 inch	QM	
• 1½ inch	QN	
• 2 inch	QP	
• 2½ inch	QQ	
Aseptic screwed NEUMO with slotted union nut[1)]		
• DN 25	RD	
• DN 32	RE	
• DN 40	RF	
• DN 50	RG	
Aseptic screwed NEUMO with threaded socket[1)]		
• DN 25	SD	
• DN 32	SE	
• DN 40	SF	
• DN 50	SG	
Aseptic screwed NEUMO with clamp connection, form R[1)]		
• DN 25	TD	
• DN 32	TE	
• DN 40	TF	
• DN 50	TG	
Aseptic screwed NEUMO with clamp connection, form V[1)]		
• DN 25	UD	
• DN 32	UE	
• DN 40	UF	
• DN 50	UG	
Male thread DIN 3852 Form A		
• G½", min. meas. span 1.6 bar (23.2 psi)	XA	
• G¾", min. meas. span 1 bar (14.5 psi)	XB	
• G1", min. meas. span 0.4 bar (5.8 psi)	XC	
• G1½", min. meas. span 0.25 bar (3.63 psi)	XD	
• G2", min. meas. span 0.16 bar (2.32 psi)	XE	
Special version (add Order code and plain text)	ZA	J1Y
Filling liquid		
Food oil, FDA-listed	3	
Special version (add Order code and plain text)	9	L1Y
Output signal		
4 ... 20 mA	1	
Special version (add Order code and plain text)	9	M1Y

[1)] Please specify as well:
Connections for pipes: R01, R02 or R03, see table "Further designs" on next page

© Siemens 2020

Selection and Ordering data		Article No.	Ord. code
SITRANS P Compact pressure transmitters for pressure and absolute pressure with diaphragm flush at front		7MF8010-	
2-wire system Process temperature up to 140 °C (284 °F) Accuracy: 0.2 % of upper range value Output 4 ... 20 mA		1 ■■■■ - ■■■■	■■■
Enclosure design (stainless steel mat. No. 1.4404/316L) / electr. connection			
Enclosure with angled plug to DIN 43650, IP65		1	
Enclosure with device plug M12, IP65, union nut made of polyamide		2	
Enclosure with device plug M12, IP65, union nut made of stainless steel		3	
Stainless steel field enclosure (small) with cable gland, IP65		4	
Stainless steel field enclosure (small) with cable gland, IP67 Internal ventilation for measuring ranges < 16 bar (< 232 psi)		5	
Measured range	**Overload pressure**		
0 ... 160 mbar (0 ... 2.32 psi)	1 bar (14.5 psi)	BB	
0 ... 250 mbar (0 ... 3.63 psi)	1 bar (14.5 psi)	BC	
0 ... 400 mbar (0 ... 5.8 psi)	3 bar (43.5 psi)	BD	
0 ... 600 mbar (0 ... 8.7 psi)	3 bar (43.5 psi)	BE	
0 ... 1 bar (0 ... 14.5 psi)	3 bar (43.5 psi)	CA	
0 ... 1.6 bar (0 ... 23.2 psi)	10 bar (145 psi)	CB	
0 ... 2.5 bar (0 ... 36.3 psi)	10 bar (145 psi)	CC	
0 ... 4 bar (0 ... 58 psi)	20 bar (290 psi)	CD	
0 ... 6 bar (0 ... 87 psi)	60 bar (870 psi)	CE	
0 ... 10 bar (0 ... 145 psi)	60 bar (870 psi)	DA	
0 ... 16 bar (0 ... 232 psi)	60 bar (870 psi)	DB	
0 ... 25 bar (0 ... 363 psi)	60 bar (870 psi)	DC	
0 ... 40 bar (0 ... 580 psi)	100 bar (1450 psi)	DD	
-160 ... 0 mbar (-2.32 ... 0 psi)	1 bar (14.5 psi)	EB	
-250 ... 0 bar (-3.73 ... 0 psi)	1 bar (14.5 psi)	EC	
-400 ... 0 bar (-5.8 ... 0 psi)	3 bar (43.5 psi)	ED	
-600 ... 0 bar (-8.7 ... 0 psi)	3 bar (43.5 psi)	EE	
-1 ... 0 bar (-14.5 ... 0 psi)	3 bar (43.5 psi)	FA	
-1 ... 0.6 bar (-14.5 ... 8.7 psi)	10 bar (145 psi)	FB	
-1 ... 1.5 bar (-14.5 ... 21.8 psi)	10 bar (145 psi)	FC	
-1 ... 3 bar (-14.5 ... 43.5 psi)	20 bar (290 psi)	FD	
-1 ... 5 bar (-14.5 ... 72.5 psi)	20 bar (290 psi)	FE	

Selection and Ordering data		Article No.	Ord. code
SITRANS P Compact pressure transmitters for pressure and absolute pressure with diaphragm flush at front		7MF8010-	
2-wire system Process temperature up to 140 °C (284 °F) Accuracy: 0.2 % of upper range value Output 4 ... 20 mA		1 ■■■■ - ■■■■	■■■
Measured range	**Overload pressure**		
(continued)			
-1 ... +9 bar (-14.5 ... +130.5 psi)	60 bar (870 psi)	GA	
-1 ... +15 bar (-14.5 ... +217.6 psi)	60 bar (870 psi)	GB	
0 ... 1 bar a (0 ... 14.5 psi a)	3 bar a (43.5 psi a)	HA	
0 ... 1.6 bar a (0 ... 23.2 psi a)	10 bar (145 psi)	HB	
0 ... 2.5 bar a (0 ... 36.3 psi a)	10 bar a (145 psi a)	HC	
0 ... 4 bar a (0 ... 58 psi a)	10 bar a (145 psi a)	HD	
0 ... 6 bar a (0 ... 87 psi a)	60 bar a (870 psi a)	HE	
0 ... 10 bar a (0 ... 145 psi a)	60 bar a (870 psi a)	JA	
Special version (add Order code and plain text)		ZA	P1Y
Explosion protection			
without		1	
with, to ATEX 100a, II 2 G, Ex ib IIC T6		2	
Further designs		Order code	
Please add "**-Z**" to Article No. and specify Order code			
Hygiene version Roughness of process connection: Foil R_a < 0.8 µm ($3.15 \cdot 10^{-8}$ inch); Welded seams R_a < 1.5 µm ($5.9 \cdot 10^{-8}$ inch)		**P01**	
Integral cooling element Process temperature max. 200 °C (392 °F) instead of 140 °C (284 °F)		**K01**	
Connections for pipe			
Pipes to DIN 11850		**R01**	
ISO pipes to DIN 2463		**R02**	
Pipes to O. D. Tubing "BS 4825 Part 1"		**R03**	
Certificates			
Quality test certificate, 5-point factory calibration (IEC 60770-2)		**C11**	
Inspection certificate to EN 10204-3.1		**C12**	
Use of FDA-listed remote seal filling liquids certified by factory certificate according to EN 10204-2.2		**C17**	
Roughness depth measurement R_a certified by factory certificate according to EN 10204-3.1		**C18**	
Certification to EHEDG for inline seals with aseptic screwed gland to DIN 11864		**C19**	

© Siemens 2020

Selection and Ordering data	Article No.	Ord. code
SITRANS P Compact pressure transmitters for pressure and absolute pressure with inline seal ↗	7MF8010-	
2-wire system Process temperature up to 140 °C (284 °F) Accuracy: 0.2 % of upper range value Output 4 ... 20 mA	2 ■■■■ - ■■■■	■■■
↗ Click on the Article No. for the online configuration in the PIA Life Cycle Portal.		
Inline seal (screwed gland at both ends) with quick-release clamps		
Milk pipe union to DIN 11851 with threaded socket		
• DN 25	AD	
• DN 32	AE	
• DN 40	AF	
• DN 50	AG	
• DN 65	AH	
Clamp connection to DIN 32676		
• DN 25	CD	
• DN 32	CE	
• DN 40	CF	
• DN 50	CG	
• DN 65	CH	
Clamp connection to ISO 2852[1]		
• 1 inch	DM	
• 1½ inch	DN	
• 2 inch	DP	
• 2½ inch	DQ	
Special version (add Order code and plain text)	ZA	J1Y
Filling liquid		
Food oil, FDA-listed	3	
Special version (add Order code and plain text)	9	L1Y
Output signal		
4 ... 20 mA	1	
Special version (add Order code and plain text)	9	M1Y

[1] Please note the internal diameter of the pipe. Please specify pipe classes (see "Further designs")

Selection and Ordering data	Article No.	Ord. code
SITRANS P Compact pressure transmitters for pressure and absolute pressure with inline seal	7MF8010-	
2-wire system Process temperature up to 140 °C (284 °F) Accuracy: 0.2 % of upper range value Output 4 ... 20 mA	2 ■■■■ - ■■■■	■■■
Inline seal with aseptic connection		
Aseptic screwed gland to DIN 11864-1, form A with threaded socket		
• 1 inch	QM	
• 1½ inch	QN	
• 2 inch	QP	
Aseptic screwed NEUMO with threaded socket[1]		
• DN 25	SD	
• DN 32	SE	
• DN 40	SF	
• DN 50	SG	
• DN 65	SH	
Aseptic screwed NEUMO with clamp connection, form R[1]		
• DN 25	TD	
• DN 32	TE	
• DN 40	TF	
• DN 50	TG	
Aseptic screwed gland SÜDMO with threaded socket W 501 [1]		
• 1 inch	VM	
• 1½ inch	VN	
• 2 inch	VP	
Aseptic screwed gland SÜDMO with clamp connection W 601 [1]		
• 1 inch	WM	
• 1½ inch	WN	
• 2 inch	WP	
Special version (add Order code and plain text)	ZA	J1Y
Filling liquid		
Food oil, FDA-listed	3	
Medicinal white oil	2	
Special version (add Order code and plain text)	9	L1Y
Output signal		
4 ... 20 mA	1	
Special version (add Order code and plain text)	9	M1Y

[1] Please specify as well:
Connections for pipes: R01, R02 or R03, see table "Further designs" on next page

© Siemens 2020

Selection and Ordering data		Article No.	Ord. code
SITRANS P Compact pressure transmitters for pressure and absolute pressure with inline seal		7MF8010-	
2-wire system Process temperature up to 140 °C (284 °F) Accuracy: 0.2 % of upper range value Output 4 ... 20 mA		2 ■■■■ - ■■■■	■■■
Enclosure design (stainless steel mat. No. 1.4404/316L) / electr. connection			
Enclosure with angled plug to DIN 43650, IP65, union nut made of polyamide		1	
Enclosure with device plug M12, IP65, union nut made of polyamide		2	
Enclosure with device plug M12, IP65, union nut made of stainless steel		3	
Stainless steel field enclosure (small) with cable gland, IP65		4	
Stainless steel field enclosure (small) with cable gland, IP67 Internal ventilation for measuring ranges < 16 bar (< 232 psi)		5	
Measured range	**Overload pressure**		
0 ... 160 mbar (0 ... 2.32 psi)	1 bar (14.5 psi)	BB	
0 ... 250 mbar (0 ... 3.63 psi)	1 bar (14.5 psi)	BC	
0 ... 400 mbar (0 ... 5.8 psi)	3 bar (43.5 psi)	BD	
0 ... 600 mbar (0 ... 8.7 psi)	3 bar (43.5 psi)	BE	
0 ... 1 bar (0 ... 14.5 psi)	3 bar (43.5 psi)	CA	
0 ... 1.6 bar (0 ... 23.2 psi)	10 bar (145 psi)	CB	
0 ... 2.5 bar (0 ... 36.3 psi)	10 bar (145 psi)	CC	
0 ... 4 bar (0 ... 58 psi)	20 bar (290 psi)	CD	
0 ... 6 bar (0 ... 87 psi)	60 bar (870 psi)	CE	
0 ... 10 bar (0 ... 145 psi)	60 bar (870 psi)	DA	
0 ... 16 bar (0 ... 232 psi)	60 bar (870 psi)	DB	
0 ... 25 bar (0 ... 363 psi)	60 bar (870 psi)	DC	
0 ... 40 bar (0 ... 580 psi)	100 bar (1450 psi)	DD	
-160 ... 0 mbar (-2.32 ... 0 psi)	1 bar (14.5 psi)	EB	
-250 ... 0 bar (-3.73 ... 0 psi)	1 bar (14.5 psi)	EC	
-400 ... 0 bar (-5.8 ... 0 psi)	3 bar (43.5 psi)	ED	
-600 ... 0 bar (-8.7 ... 0 psi)	3 bar (43.5 psi)	EE	
-1 ... 0 bar (-14.5 ... 0 psi)	3 bar (43.5 psi)	FA	
-1 ... 0.6 bar (-14.5 ... 8.7 psi)	10 bar (145 psi)	FB	
-1 ... 1.5 bar (-14.5 ... 21.8 psi)	10 bar (145 psi)	FC	
-1 ... 3 bar (-14.5 ... 43.5 psi)	20 bar (290 psi)	FD	
-1 ... 5 bar (-14.5 ... 72.5 psi)	20 bar (290 psi)	FE	

Selection and Ordering data		Article No.	Ord. code
SITRANS P Compact pressure transmitters for pressure and absolute pressure with inline seal		7MF8010-	
2-wire system Process temperature up to 140 °C (284 °F) Accuracy: 0.2 % of upper range value Output 4 ... 20 mA		2 ■■■■ - ■■■■	■■■
Measured range (continued)	**Overload pressure**		
-1 ... 9 bar (-14.5 ... 130.5 psi)	60 bar (870 psi)	GA	
-1 ... 15 bar (-14.5 ... 217.6 psi)	60 bar (870 psi)	GB	
0 ... 1 bar a (0 ... 14.5 psi a)	3 bar a (43.5 psi a)	HA	
0 ... 1.6 bar a (0 ... 23.2 psi a)	10 bar (145 psi)	HB	
0 ... 2.5 bar a (0 ... 36.3 psi a)	10 bar a (145 psi a)	HC	
0 ... 4 bar a (0 ... 58 psi a)	10 bar a (145 psi a)	HD	
0 ... 6 bar a (0 ... 87 psi a)	60 bar a (870 psi a)	HE	
0 ... 10 bar a (0 ... 145 psi a)	60 bar a (870 psi a)	JA	
Special version (add Order code and plain text)		ZA	P1Y
Explosion protection			
without		1	
with, to ATEX 100a, II 2 G, Ex ib IIC T6		2	
Further designs		Order code	
Please add "**-Z**" to Article No. and specify Order code			
Hygiene version Roughness of process connection: Foil R_a < 0.8 µm ($3.15 \cdot 10^{-8}$ inch); Welded seams R_a < 1.5 µm ($5.9 \cdot 10^{-8}$ inch)		**P01**	
Integral cooling element Process temperature max. 200 °C (392 °F) instead of 140 °C (284 °F)		**K01**	
Connections for pipe			
Pipes to DIN 11850		**R01**	
ISO pipes to ISO 2463		**R02**	
Pipes to O. D. Tubing "BS 4825 Part 1"		**R03**	
Certificates			
Quality test certificate, 5-point factory calibration (IEC 60770-2)		**C11**	
Inspection certificate to EN 10204-3.1		**C12**	
Use of FDA-listed remote seal filling liquids certified by factory certificate according to EN 10204-2.2		**C17**	
Roughness depth measurement R_a certified by factory certificate according to EN 10204-3.1		**C18**	
Certification to EHEDG for inline seals with aseptic screwed gland to DIN 11864		**C19**	

© Siemens 2020

Dimensional drawings

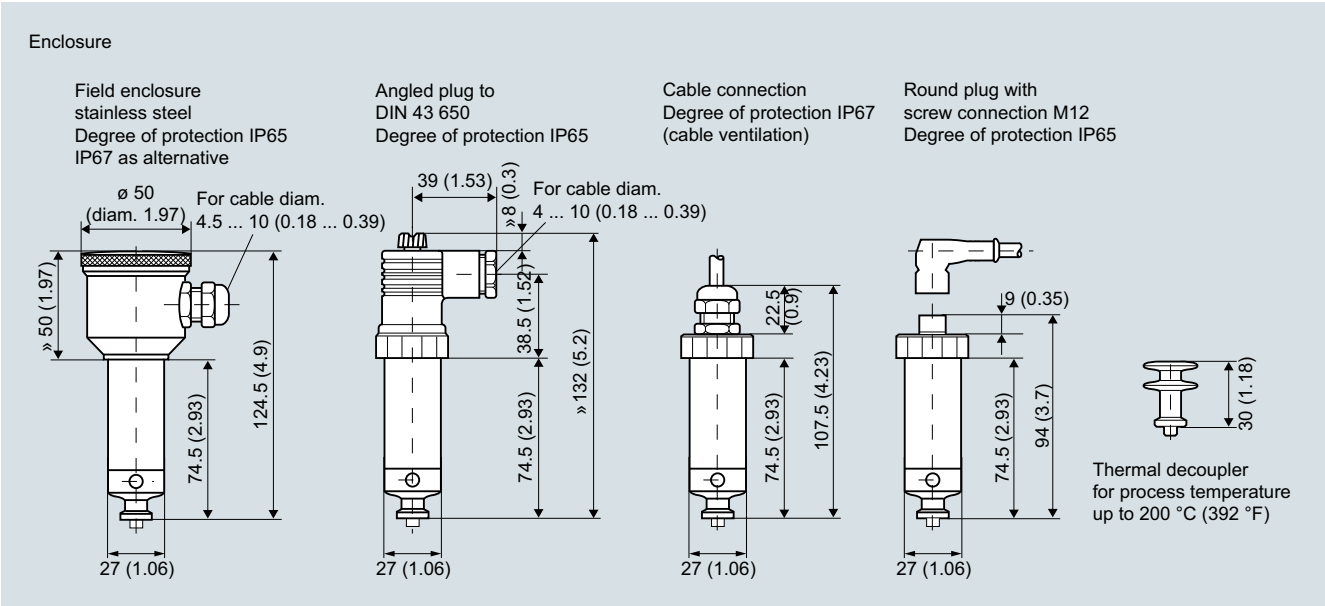

SITRANS P Compact, dimenclosureensions in mm (inch)

Process connections

Diaphragm seal with quick-release clamp

Milk pipe union to DIN 11851 with slotted union nut

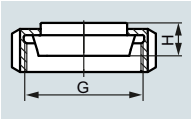

DN	PN	H mm (inch)	G
25	40	24 (0.95)	Rd. 52 x 1/6"
32	40	24 (0.95)	Rd. 58 x 1/6"
40	40	24 (0.95)	Rd. 65 x 1/6"
50	25	25.1 (0.99)	Rd. 78 x 1/6"
65	25	28.6 (1.13)	Rd. 95 x 1/6"

Milk pipe union to DIN 11851 with threaded socket

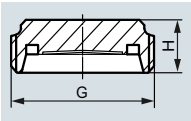

DN	PN	H mm (inch)	G
25	40	-	Rd. 52 x 1/6"
32	40	20 (0.79)	Rd. 58 x 1/6"
40	40	20 (0.79)	Rd. 65 x 1/6"
50	25	20 (0.79)	Rd. 78 x 1/6"
65	25	22 (0.87)	Rd. 95 x 1/6"

Clamp connection to DIN 32676

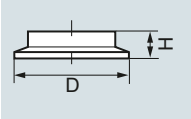

DN	PN	H mm (inch)	D mm (inch)
25	16	14 (0.55)	50.5 (2)
40	16	14 (0.55)	50.5 (2)
50	16	14 (0.55)	64 (2.52)

Clamp connection to ISO 2852

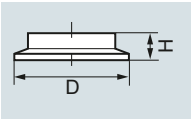

DN	PN	H mm (inch)	D mm (inch)
1"	16	14 (0.55)	50.5 (2)
1½"	16	12 (0.47)	50.5 (2)
2"	16	14 (0.55)	64 (2.52)
2½"	16	14 (0.55)	77.5 (3.05)

IDF standard with slotted union nut

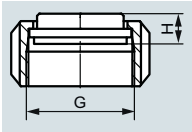

DN	PN	H mm (inch)	G inch (IDF thread)
1"	40	21 (0.83)	1"
1½"	40	13.5 (0.53)	1½"
2"	25	15 (0.59)	2"

IDF standard with threaded socket

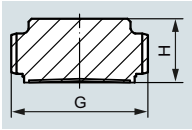

DN	PN	H mm (inch)	G inch (IDF thread)
1"	40	21 (0.83)	1"
1½"	40	13.5 (0.53)	1½"
2"	25	15 (0.59)	2"

SMS standard with slotted union nut

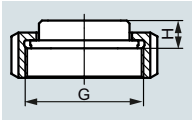

DN	PN	H mm (inch)	G
1"	40	16 (0.63)	Rd 40 x 1.6"
1½"	40	16 (0.63)	Rd 60 x 1.6"
2"	25	16 (0.63)	Rd 70 x 1.6"

SMS standard with threaded socket

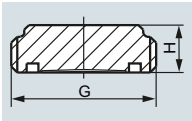

DN	PN	H mm (inch)	G
1"	40	16 (0.63)	Rd 40 x 1.6"
1½"	40	20 (0.79)	Rd 60 x 1.6"
2"	25	20 (0.79)	Rd 70 x 1.6"

DRD flange, without welding-type flange

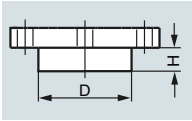

DN	PN	H mm (inch)	D mm (inch)
50	40	16.7 (0.66)	65.5 (2.58)

© Siemens 2020

Varivent connection

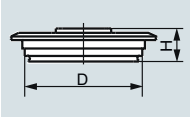

DN	PN	H mm (inch)	D mm (inch)
25	25	19 (0.75)	50 (1.97)
40 … 125	25/10	19 (0.75)	68 (2.68)

Diaphragm seal with aseptic connection

Aseptic screwed gland to DIN 11864-1, form A, with slotted union nut

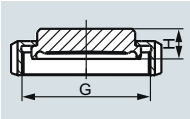

DN	PN	H mm (inch)	G
1"	40	20 (0.79)	Rd 52 x 1/6"
1½"	40	20 (0.79)	Rd 58 x 1/6"
2"	25	20 (0.79)	Rd 65 x 1/6"
2½"	25	20 (0.79)	Rd 78 x 1/6"

Aseptic screwed gland to DIN 11864-1, form A, with threaded socket

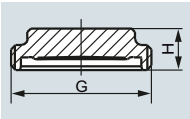

DN	PN	H mm (inch)	G
1"	40	15 (0.59)	Rd 52 x 1/6"
1½"	40	15 (0.59)	Rd 58 x 1/6"
2"	25	15 (0.59)	Rd 65 x 1/6"
2½"	25	15 (0.59)	Rd 78 x 1/6"

Aseptic screwed NEUMO BioConnect with slotted union nut

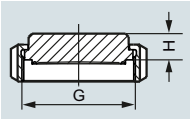

DN	PN	H mm (inch)	G
25	16	15 (0.59)	M 42 x 2
32	16	15 (0.59)	M 52 x 2
40	16	15 (0.59)	M 56 x 2
50	16	15 (0.59)	M 68 x 2

Aseptic screwed NEUMO BioConnect with threaded socket

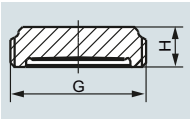

DN	PN	H mm (inch)	G
25	16	20 (0.79)	M 42 x 2
32	16	20 (0.79)	M 52 x 2
40	16	20 (0.79)	M 56 x 2
50	16	20 (0.79)	M 68 x 2

Aseptic screwed NEUMO BioConnect with clamp connection, form R

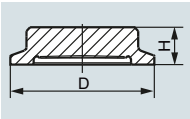

DN	PN	H mm (inch)	D mm (inch)
25	40	20 (0.79)	50.5 (2)
32	40	20 (0.79)	50.5 (2)
40	40	20 (0.79)	64 (2.52)
50	25	20 (0.79)	77.4 (3.05)

Aseptic screwed NEUMO BioConnect with clamp connection, form V

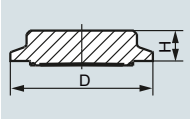

DN	PN	H mm (inch)	D mm (inch)
25	40	15 (0.59)	50.5 (2)
32	40	15 (0.59)	50.5 (2)
40	40	15 (0.59)	64 (2.52)
50	25	15 (0.59)	77.4 (3.05)

Male thread DIN 3852, form A

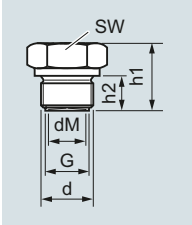

G	d mm (inch)	d_M mm (inch)	h_1 mm (inch)	h_2 mm (inch)	SW mm (inch)
G½A	26 (1.02)	17.5 (0.69)	27 (1.06)	14 (0.55)	27 (1.06)
G¾A	32 (1.26)	22.6 (0.89)	31 (1.22)	16 (0.63)	32 (1.26)
G1A	39 (1.54)	27 (1.06)	33 (1.30)	18 (0.71)	51 (2.01)
G1½A	55 (2.17)	40 (1.57)	40 (1.57)	22 (0.87)	55 (2.17)
G2A	68 (2.68)	51 (2.00)	42 (1.65)	24 (0.94)	70 (2.76)

Inline seal (screwed gland at both ends) with quick-release clamps

Milk pipe union to DIN 11851 with threaded socket

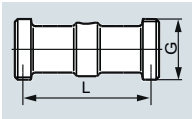

DN	PN	L mm (inch)	G
25	40	110 (4.33)	Rd 52 x 1/6"
32	40	110 (4.33)	Rd 58 x 1/6"
40	40	110 (4.33)	Rd 65 x 1/6"
50	25	110 (4.33)	Rd 78 x 1/6"
65	25	110 (4.33)	Rd 95 x 1/6"

Clamp connection to DIN 32676

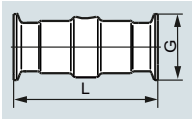

DN	PN	L mm (inch)	D mm (inch)
25	16	110 (4.33)	50.5 (2)
32	16	110 (4.33)	50.5 (2)
40	16	110 (4.33)	50.5 (2)
50	16	110 (4.33)	64 (2.52)
65	10	110 (4.33)	91 (3.58)

Clamp connection to ISO 2852

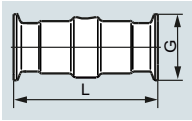

DN	PN	L mm (inch)	D mm (inch)
1"	16	110 (4.33)	50.5 (2)
1½"	16	110 (4.33)	50.5 (2)
2"	16	110 (4.33)	64 (2.52)
2½"	16	110 (4.33)	91 (3.58)

Inline seal with aseptic connection

Aseptic screwed gland to DIN 11864-1, form A, with threaded socket

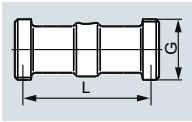

DN	PN	L mm (inch)	G
1"	40	110 (4.33)	Rd 52 x 1/6"
1½"	40	110 (4.33)	Rd 65 x 1/6"
2"	25	110 (4.33)	Rd 78 x 1/6"

Aseptic screwed NEUMO BioConnect with threaded socket

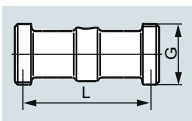

DN	PN	L mm (inch)	G
25	16	110 (4.33)	M 42 x 2
32	16	110 (4.33)	M 52 x 2
40	16	110 (4.33)	M 56 x 2
50	16	110 (4.33)	M 68 x 2
65	16	110 (4.33)	M 90 x 3

© Siemens 2020

Aseptic screwed NEUMO BioConnect with clamp connection, form R

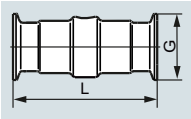

DN	PN	L mm (inch)	D mm (inch)
25	16	110 (4.33)	50.4 (2)
32	16	110 (4.33)	50.4 (2)
40	16	110 (4.33)	64 (2.52)
50	16	110 (4.33)	77.4 (3.05)

Aseptic screwed gland SÜDMO with threaded socket W 501

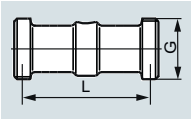

DN	PN	L mm (inch)	G
1"	25	110 (4.33)	Rd 44 x 1/6"
1½"	25	110 (4.33)	Rd 58 x 1/6"
2"	20	110 (4.33)	Rd 78 x 1/6"

Aseptic screwed gland SÜDMO with threaded socket W 601

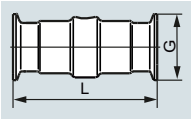

DN	PN	L mm (inch)	D mm (inch)
1"	16	110 (4.33)	50.5 (2)
1½"	16	110 (4.33)	64 (2.52)
2"	16	110 (4.33)	77.5 (3.05)

Schematics

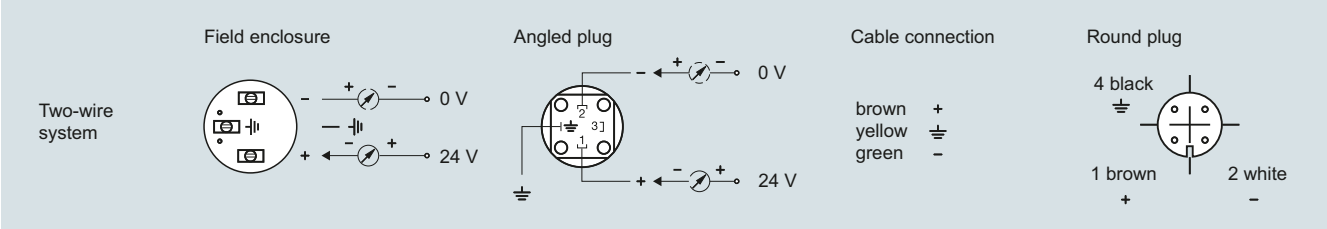

SITRANS P Compact, connection diagram

© Siemens 2020

Overview

The SITRANS P300 is a digital pressure transmitter for relative and absolute pressure. The conventional thread versions are available as process connections, as are flush-mounted versions. A large number of the flush-mounted versions are suitable for food and pharmaceutical applications, and satisfy the EHEDG and 3A hygiene requirements.

The output signal is a load-independent direct current from 4 to 20 mA or a PROFIBUS PA or FOUNDATION signal, which is linearly proportional to the input pressure. Communication is via HART protocol or PROFIBUS PA interface. Convenient buttons for easy local operation of the basic settings of the pressure transmitter.

The SITRANS P300 has a single-chamber stainless steel enclosure. The pressure transmitter is approved with "intrinsically safe" type of protection. It can be used in zone 1 or zone 0.

Benefits

- High quality and service life
- High reliability even under extreme chemical and mechanical loads
- Extensive diagnosis and simulation functions
- Minimum conformity error
- Small long-term drift
- Wetted parts made of high-grade materials (such as stainless steel, Hastelloy)
- Measuring range 0.008 bar to 400 bar (0.1 psi to 5802 psi)
- High measuring accuracy
- Parameterization over control keys and HART or PROFIBUS PA or FOUNDATION Fieldbus

Application

The pressure transmitter is available in versions for gauge pressure and for absolute pressure. The output signal is always a load-independent direct current from 4 to 20 mA or a PROFIBUS PA or FOUNDATION Fieldbussignal, which is linearly proportional to the input pressure. The pressure transmitter measures aggressive, non-aggressive and hazardous gases, as well as vapors and liquids.

It can be used for the following measurement types:

- Gauge pressure
- Absolute pressure

With appropriate parameter settings, it can also be used for the following additional measurement types:

- Level
- Volume
- Mass

The "intrinsically-safe" Ex version of the transmitter can be installed in hazardous areas (zone 1). The transmitters are provided with an EC type examination certificate and comply with the respective harmonized European standards of ATEX.

Gauge pressure

This variant measures aggressive, non-aggressive and hazardous gases, vapors and liquids.

The smallest measuring span is 0.01 bar (0.15 psi), the largest is 400 bar (5802 psi).

Level

With appropriate parameter settings, the gauge pressure variant measures the level of aggressive, non-aggressive and hazardous liquids.

For measuring the level in an open container you require one device; for measuring the level in a closed container, you require two devices and a process control system.

Absolute pressure

This variant measures the absolute pressure of aggressive, non-aggressive and hazardous gases, vapors and liquids.

The smallest measuring span is 0.008 bar a (0.12 psi a), the largest is 30 bar a (435 psi a).

© Siemens 2020

Design

The device comprises:

- Electronics
- Enclosure
- Measuring cell

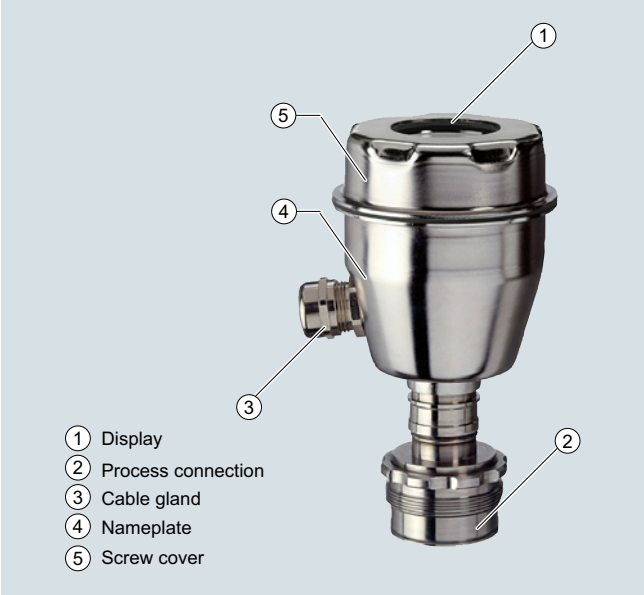

Perspective view of SITRANS P300

The enclosure has a screw-on lid (5) and, depending on the version, is with or without an inspection window. The electrical terminal enclosure, the buttons for operation of the device are located under this lid and, depending on the version, the display. The connections for the auxiliary power U_H and the shield are in the terminal enclosure. The cable gland is mounted on the side of the enclosure. The measuring cell with the process connection (2) is located on the bottom of the enclosure. The measuring cell with the process connection may differ from the one shown in the diagram, depending on the device version.

Example of attached measuring points sign

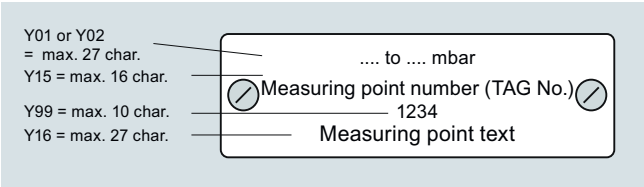

Function

Operation of electronics with HART communication

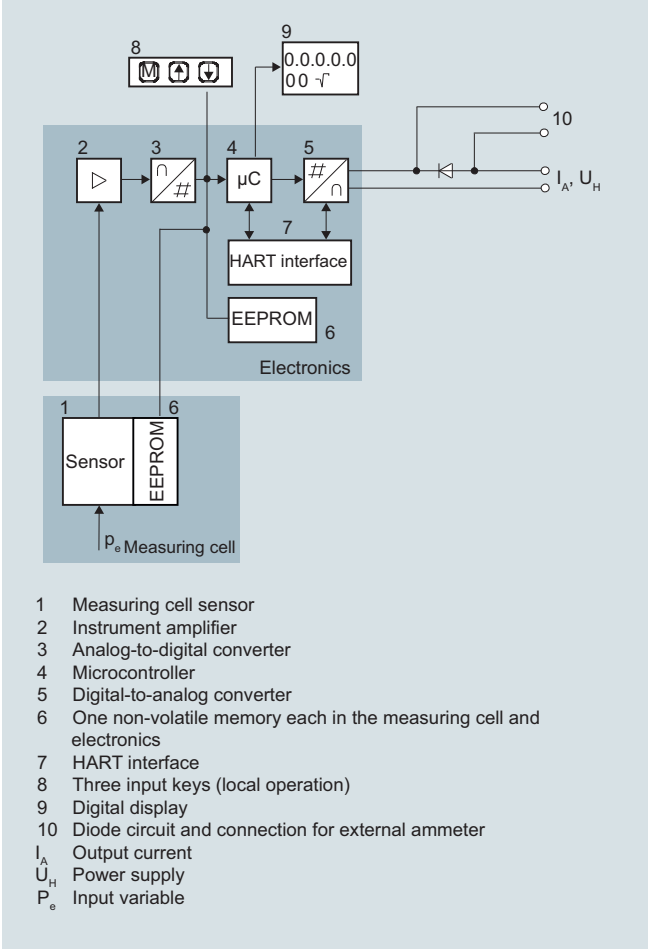

Function diagram of electronics

The input pressure is converted into an electrical signal by the sensor (1). This signal is amplified by the measuring amplifier (2) and digitalized in an analog-to-digital converter (3). The digital signal is analyzed in a microcontroller (4) and corrected according to linearity and thermal characteristics. In a digital-to-analog converter (5) it is then converted into the output current of 4 to 20 mA. A diode circuit provides reverse polarity protection. You can make an uninterrupted current measurement with a low-ohm ammeter at the connection (10). The data specific to the measuring cell, the electronic data and parameter settings are stored in two non-volatile memories (6). The first memory is linked to the measuring cell, the second to the electronics.

The buttons (8) can be used to call up individual functions, so-called modes. If you have a device with a display (9), you can use this to track mode settings and other messages. The basic mode settings can be changed with a computer via the HART modem (7).

© Siemens 2020

Operation of electronics with PROFIBUS PA communication

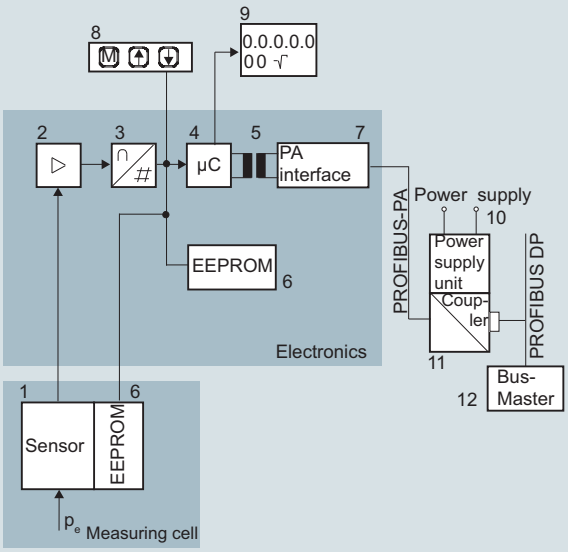

1	Measuring cell sensor	8	Three input keys (local operation)
2	Instrument amplifier	9	Digital display
3	Analog-to-digital converter	10	Power supply
4	Microcontroller	11	DP/PA coupler or link
5	Electrical isolation	12	Bus master
6	One non-volatile memory each in the measuring cell and electronics	p_e	Input variable
7	PROFIBUS-PA interface		

Function diagram of electronics

The input pressure is converted into an electrical signal by the sensor (1). This signal is amplified by the measuring amplifier (2) and digitalized in an analog-to-digital converter (3). The digital signal is analyzed in a microcontroller (4) and corrected according to linearity and thermal characteristics. It is then made available at the PROFIBUS PA over an electrically isolated PROFIBUS PA interface (7). The data specific to the measuring cell, the electronic data and parameter settings are stored in two non-volatile memories (6). The first memory is linked to the measuring cell, the second to the electronics.

The buttons (8) can be used to call up individual functions, so-called modes. If you have a device with a display (9), you can use this to track mode settings and other messages. The basic mode settings (12) can be changed with a computer over the bus master.

Operation of electronics with FOUNDATION Fieldbus communication

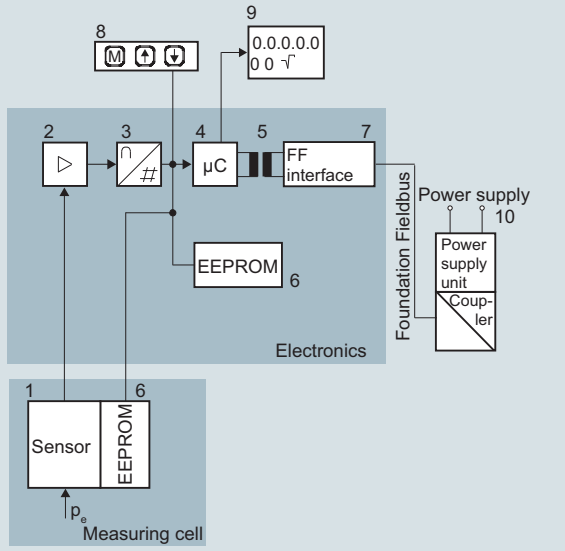

1	Measuring cell sensor	8	Three input keys (local operation)
2	Instrument amplifier	9	Digital display
3	Analog-to-digital converter	10	Power supply
4	Microcontroller		
5	Electrical isolation		
6	One non-volatile memory each in the measuring cell and electronics	p_e	Input variable
7	FF interface		

Function diagram of electronics

The bridge output voltage created by the sensor (1, Figure "Function diagram of electronics") amplified by the measuring amplifier (2) and digitized in the analog-to-digital converter (3). The digital information is evaluated in the microcontroller, its linearity and temperature response corrected, and provided on the FOUNDATION Fieldbus through an electrically isolated FOUNDATION Fieldbus interface (7).

The data specific to the measuring cell, the electronics data, and the parameter data are stored in the two non-volatile memories (6). The one memory is coupled to the measuring cell, the other to the electronics. As the result of this modular design, the electronics and the measuring cell can be replaced separately from each other.

Using the three input buttons (8) you can parameterize the pressure transmitter directly at the measuring point. The input buttons can also be used to control the view of the results, the error messages and the operating modes on the display (9).

The results with status values and diagnostic values are transferred by cyclic data transmission on the FOUNDATION Fieldbus. Parameterization data and error messages are transferred by acyclic data transmission. Special software such as National Instruments Configurator is required for this.

Mode of operation of the measuring cells

The process connections available include the following:

- G½
- ½-14 NPT
- Flush-mounted diaphragm:
  - Flanges to EN
  - Flanges to ASME
  - NuG and pharmaceutical connections

© Siemens 2020

Measuring cell for gauge pressure

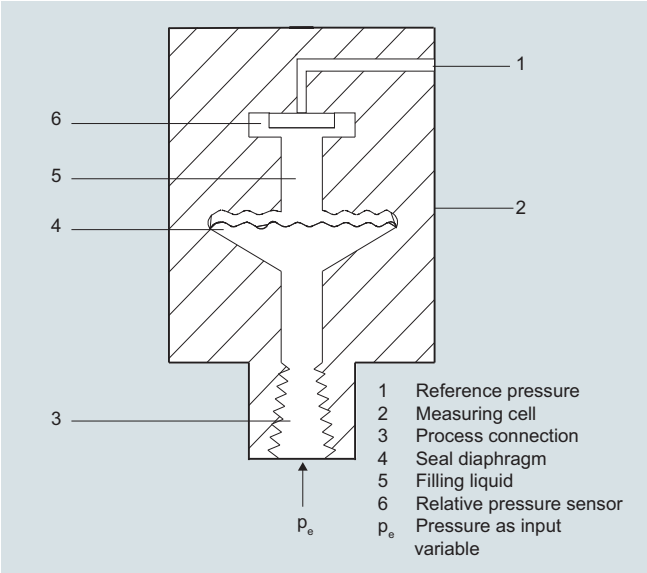

Measuring cell for gauge pressure, function diagram

The input pressure (p_e) is transferred to the gauge pressure sensor (6) via the seal diaphragm (4) and the filling liquid (5), displacing its measuring diaphragm. The displacement changes the resistance value of the four piezo resistors in the measuring diaphragm in a bridge circuit. The change in the resistance causes a bridge output voltage proportional to the input pressure.

Transmitters with measuring spans ≤ 63 bar (≤ 926.1 psi) measure the input pressure compared to atmospheric, transmitters with measuring spans of ≥ 160 bar (≥ 2352 psi) compared to a vacuum.

Measuring cell for absolute pressure

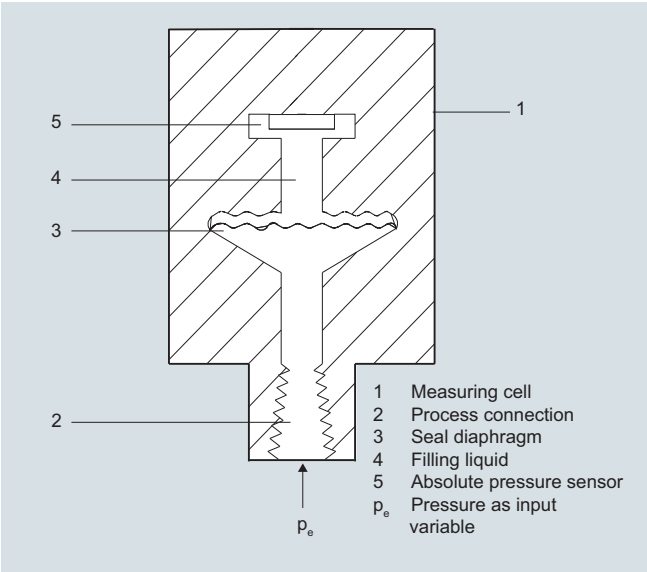

Measuring cell for absolute pressure, function diagram

The input pressure (p_e) is transferred to the absolute pressure sensor (5) via the seal diaphragm (3) and the filling liquid (4), displacing its measuring diaphragm. The displacement changes the resistance value of the four piezo resistors in the measuring diaphragm in a bridge circuit. The change in the resistance causes a bridge output voltage proportional to the input pressure.

Measuring cell for gauge pressure, front-flush diaphragm

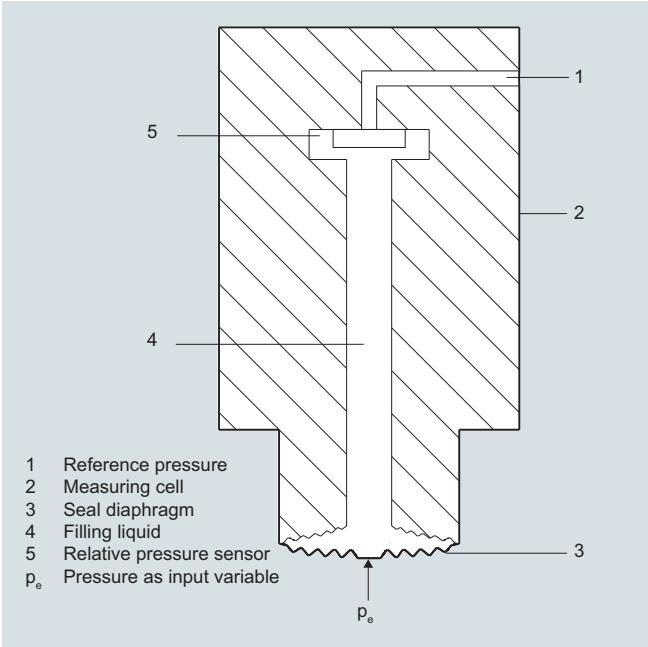

Measuring cell for gauge pressure, front-flush diaphragm, function diagram

The input pressure (p_e) is transferred to the gauge pressure sensor (6) via the seal diaphragm (4) and the filling liquid (5), displacing its measuring diaphragm. The displacement changes the resistance value of the four piezo resistors in the measuring diaphragm in a bridge circuit. The change in the resistance causes a bridge output voltage proportional to the input pressure.

Transmitters with measuring spans ≤ 63 bar (≤ 926.1 psi) measure the input pressure compared to atmospheric, transmitters with measuring spans of ≥ 160 bar (≥ 2352 psi) compared to a vacuum.

Measuring cell for absolute pressure, front-flush diaphragm

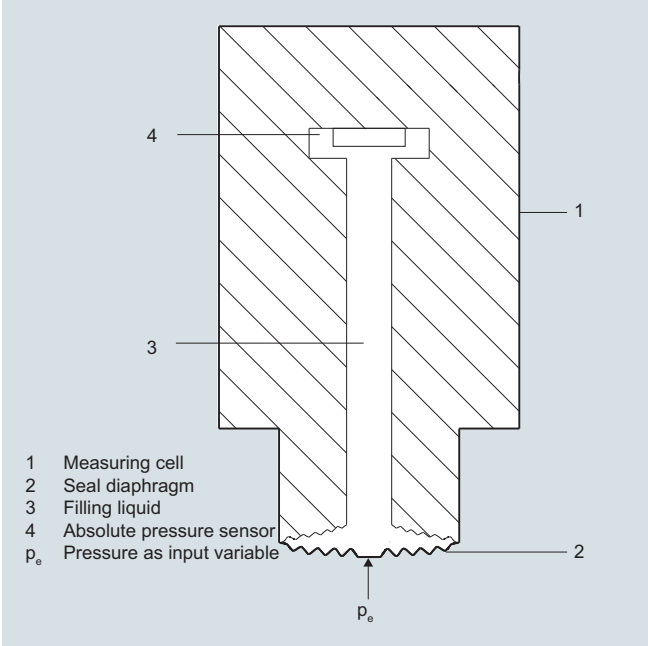

Measuring cell for absolute pressure, front-flush diaphragm, function diagram

© Siemens 2020

The input pressure (p_e) is transferred to the absolute pressure sensor (5) via the seal diaphragm (3) and the filling liquid (4), displacing its measuring diaphragm. The displacement changes the resistance value of the four piezo resistors in the measuring diaphragm in a bridge circuit. The change in the resistance causes a bridge output voltage proportional to the input pressure.

Parameterization

Depending on the version, there are a range of options for parameterizing the pressure transmitter and for setting or scanning the parameters.

Parameterization using the input buttons (local operation)

With the input buttons you can easily set the most important parameters without any additional equipment.

Parameterization using HART communication

Parameterization using HART communication is performed with a HART communicator or a PC.

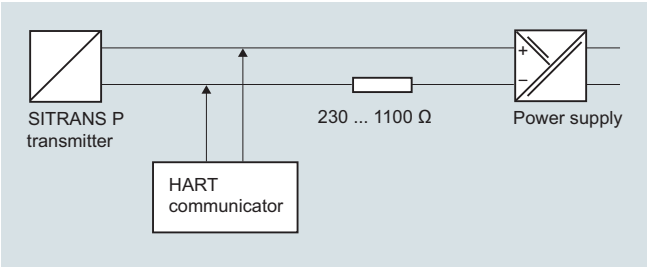

Communication between a HART communicator and a pressure transmitter

When parameterizing with the HART communicator, the connection is made directly to the 2-wire cable.

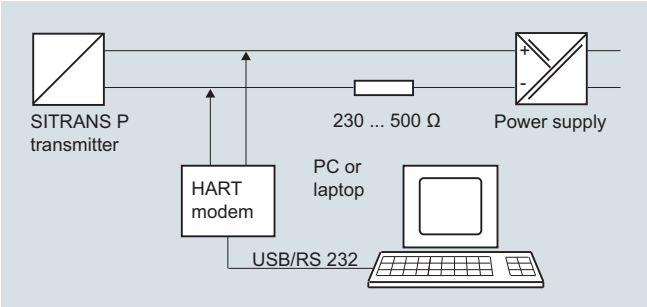

HART communication between a PC communicator and a pressure transmitter

When parameterizing with a PC, the connection is made through a HART modem.

The signals needed for communication in conformity with the HART 5.x or 6.x protocols are superimposed on the output current using the Frequency Shift Keying (FSK) method.

Adjustable parameters on SITRANS P300 with HART communication

Parameters	Input keys	HART communication
Lower range value	x	x
Upper range value	x	x
Electrical damping	x	x
Lower range value without application of a pressure ("Blind setting")	x	x
Upper range value without application of a pressure ("Blind setting")	x	x
Zero adjustment	x	x
Current transmitter	x	x
Fault current	x	x
Disabling of buttons, write protection	x	x[1)]
Type of dimension and actual dimension	x	x
Input of characteristic		x
Freely-programmable LCD		x
Diagnostic functions		x

[1)] Cancel apart from write protection

Diagnostic functions for SITRANS P300 with HART communication

- Zero correction display
- Event counter
- Limit transmitter
- Saturation alarm
- Slave pointer
- Simulation functions
- Maintenance timer

Available physical units of display for SITRANS P300 with HART communication

Table style: Technical specifications 2

Physical variable	Physical dimensions
Pressure (setting can also be made in the factory)	Pa, MPa, kPa, bar, mbar, torr, atm, psi, g/cm^2, kg/cm^2, inH_2O, inH_2O (4 °C), mmH_2O, ftH_2O (20 °C), inHg, mmHg
Level (height data)	m, cm, mm, ft, in
Volume	m^3, dm^3, hl, yd^3, ft^3, in^3, US gallon, Imp. gallon, bushel, barrel, barrel liquid
Mass	g, kg, t, lb, Ston, Lton, oz
Temperature	K, °C, °F, °R
Miscellaneous	%, mA

© Siemens 2020

Parameterization through PROFIBUS PA interface

Fully digital communication through PROFIBUS PA, profile 3.0, is particularly user-friendly. The PROFIBUS connects the SITRANS P300 PA to a process control system, e.g. SIMATIC PSC 7. Communication is possible even in a potentially explosive environment.

For parameterization through PROFIBUS you need suitable software, e.g. SIMATIC PDM (Process Device Manager).

Parameterization through FOUNDATION Fieldbus interface

Fully digital communication through FOUNDATION Fieldbus is particularly user-friendly. Through the FOUNDATION Fieldbus the P300 is connected to a process control system. Communication is possible even in a potentially explosive environment.

For parameterization through the FOUNDATION Fieldbus you need suitable software, e.g. National Instruments Configurator.

Adjustable parameters for SITRANS P300 with PROFIBUS PA and FOUNDATION Fieldbus

Adjustable parameters	Input keys	PROFIBUS PA and FOUNDATION Fieldbus interface
Electrical damping	x	x
Zero adjustment (correction of position)	x	x
Buttons and/or function disabling	x	x
Source of measured-value display	x	x
Physical dimension of display	x	x
Position of decimal point	x	x
Bus address	x	x
Adjustment of characteristic	x	x
Input of characteristic		x
Freely-programmable LCD		x
Diagnostic functions		x

Diagnostic functions for SITRANS P300 with PROFIBUS PA and FOUNDATION Fieldbus

- Event counter
- Slave pointer
- Maintenance timer
- Simulation functions
- Display of zero correction
- Limit transmitter
- Saturation alarm

Physical dimensions available for the display

Physical variable	Physical dimensions
Pressure (setting can also be made in the factory)	MPa, kPa, Pa, bar, mbar, torr, atm, psi, g/cm^2, kg/cm^2, mmH_2O, mmH_2O (4 °C), inH_2O, in$H_2$0 (4 °C), ftH_2O (20 °C), mmHg, inHg
Level (height data)	m, cm, mm, ft, in, yd
Mass	g, kg, t, lb, Ston, Lton, oz
Volume	m^3, dm^3, hl, yd^3, ft^3, in^3, US gallon, Imp. gallon, bushel, barrel, barrel liquid
volume flow	m^3/s, m^3/min, m^3/h, m^3/d, l/s, l/min, l/h, l/ d, Ml/d, ft^3/s, ft^3/min, ft^3/h, ft^3/d, US gallon/s, US gallon/min, US gallon/h, US gallon/d, bbl/s, bbl/min, bbl/h, bbl/d
Mass flow	g/s, g/min, g/h, g/d, kg/s, kg/min, kg/h, kg/d, t/s, t/min, t/h, /t/d, lb/s, lb/min, lb/h, lb/d, STon/s, STon/min, STon/h, STon/d, LTon/s, LTon/min, LTon/h, LTon/d
Total mass flow	t, kg, g, lb, oz, LTon, STon
Temperature	K, °C, °F, °R
Miscellaneous	%

Hygiene version

In the case of the SITRANS P300 with 7MF812.-... front-flush diaphragm, selected connections comply with the requirements of the EHEDG or 3A. You will find further details in the order form. Please note in particular that the seal materials used must comply with the requirements of 3A. Similarly, the filling liquids used must be FDA-compliant.

© Siemens 2020

Technical specifications

SITRANS P300 for gauge and absolute pressure

Gauge pressure input

Measured variable

Measuring span (infinitely adjustable) or nominal measuring range, max. operating pressure (in accordance with 2014/68/EU Pressure Equipment Directive) and max. test pressure (pursuant to DIN 16086)

(for oxygen measurement, max. 100 bar/10 MPa/1450 psi and 60 °C (140 °F) ambient temperature/temperature of medium)

HART	**PROFIBUS PA/ FOUNDATION Fieldbus**		
Measuring span	Nominal measuring range	Max. operating pressure MAWP (PS)	Max. perm. test pressure
8.3 ... 250 mbar 0.83 ... 25 kPa 0.12 ... 3.6 psi	250 mbar 25 kPa 3.6 psi	4 bar 400 kPa 58 psi	6 bar 600 kPa 87 psi
0.01 ... 1 bar 1 ... 100 kPa 0.15 ... 14.5 psi	1 bar 100 kPa 14.5 psi	4 bar 400 kPa 58 psi	6 bar 600 kPa 87 psi
0.04 ... 4 bar 4 ... 400 kPa 0.58 ... 58 psi	4 bar 400 kPa 58 psi	7 bar 0.7 MPa 102 psi	10 bar 1 MPa 145 psi
0.16 ... 16 bar 16 ... 1600 kPa 2.3 ... 232 psi	16 bar 1600 kPa 232 psi	21 bar 2.1 MPa 305 psi	32 bar 3.2 MPa 464 psi
0.63 ... 63 bar 63 ... 6300 kPa 9.1 ... 914 psi	63 bar 6300 kPa 914 psi	67 bar 6.7 MPa 972 psi	100 bar 10 MPa 1450 psi
1.6 ... 160 bar 0.16 ... 16 MPa 23 ... 2321 psi	160 bar 16 MPa 2321 psi	167 bar 16.7 MPa 2422 psi	250 bar 2.5 MPa 3626 psi
4 ... 400 bar 0.4 ... 40 kPa 58 ... 5802 psi	400 bar 40 kPa 5802 psi	400 bar 40 MPa 5802 psi	600 bar 60 MPa 8700 psi

Lower measuring limit

(for 250mbar/25 kPa/3.6 psi measuring cells, the lower measuring limit is 750 mbar a/75 kPa a/10.8 psi a. The measuring cell is vacuum-resistant up to 30 mbar a/3 kPa a/0.44 psi a.)

- Measuring cell with silicone oil: 30 mbar a/3 kPa a/0.44 psi a
- Measuring cell with inert filling liquid: 30 mbar a/3 kPa a/0.44 psi a

Upper measuring limit: 100 % of max. measuring span (for oxygen measurement max. 100 bar/10 MPa/1450 psi and 60 ° (140 °F) ambient temperature/temperature of medium)

Absolute pressure input

Measured variable: Absolute pressure

Measuring span (infinitely adjustable) or nominal measuring range, max. operating pressure (in accordance with 2014/68/EU Pressure Equipment Directive) and max. test pressure (pursuant to DIN 16086)

HART	**PROFIBUS PA/ FOUNDATION Fieldbus**		
Measuring span	Nominal measuring range	Max. operating pressure MAWP (PS)	Max. perm. test pressure
8.34 ... 250 mbar a 0.83 ... 25 kPa a 3.35 ... 100 inH_2O a 0.13 ... 3.63 psi a	250 mbar a 25 kPa a 100 inH_2O a	1.5 bar a 150 kPa a 21.8 psi a	6 bar a 600 kPa a 87 psi a
43.34 ... 1300 mbar a 4.33 ... 130 kPa a 17.42 ... 522.4 inH_2O a 0.63 ... 18.86 psi a	1300 mbar a 130 kPa a 525 inH_2O	2.6 bar a 260 kPa a 37.7 psi a	10 bar a 1 MPa a 145 psi a
0.17 ... 5 bar a 17 ... 500 kPa a 2.43 ... 72,5 psi a	5000 mbar a 500 kPa a 72.5 psi a	10 bar a 1 MPa a 145 psi a	30 bar a 3 MPa a 435 psi a
1 ... 30 bar a 0.1 ... 3 MPa a 14.6 ... 435 psi a	30 bar a 3 MPa a 435 psi a	45 bar a 4.5 MPa a 653 psi a	100 bar a 10 MPa a 1450 psi a

© Siemens 2020

SITRANS P300 for gauge and absolute pressure				
Lower measuring limit				
• Measuring cell with silicone oil	0 mbar a/0 kPa a /0 psi a			
• Measuring cell with inert filling liquid				
- for temperature of medium -20 °C < ϑ ≤ +60 °C (-4 °F < ϑ ≤ +140 °F)	30 mbar a/3 kPa a/0.44 psi a			
- for temperature of medium 60 °C < ϑ ≤ +100 °C (max. 85 °C for measuring cell 30 bar) (140 °F < ϑ ≤ +212 °F (max. 185 °F for meas. cell 435 psi))	30 mbar a + 20 mbar a · (ϑ - 60 °C)/°C 3 kPa a + 2 kPa a · (ϑ - 60 °C)/°C 0.44 psi a + 0.29 psi a · (ϑ - 140 °F)/°F			
Upper measuring limit	100 % of max. measuring span (for oxygen measurement max. 100 bar/10 MPa/1450 psi und 60 °C (140 °F) ambient temperature/temperature of medium)			
Lower range value	Between the measuring limits (fully adjustable)			
Input of gauge pressure, with front-flush diaphragm				
Measured variable	Gauge pressure, front-flush			
Measuring span (infinitely adjustable) or nominal measuring range, max. permissible operating pressure and max. test pressure	**HART**	**PROFIBUS PA/ FOUNDATION Fieldbus**		
	Measuring span	Nominal measuring range	Max. operating pressure MAWP (PS)	Max. perm. test pressure
	0.01 ... 1 bar 1 ... 100 kPa 0.15 ... 14.5 psi	1 bar 100 kPa 14.5 psi	4 bar 400 kPa 58 psi	6 bar 600 kPa 87 psi)
	0.04 ... 4 bar 4 ... 400 kPa 0.58 ... 58 psi	4 bar 400 kPa 58 psi	7 bar 0.7 MPa 102 psi	10 bar 1 MPa 145 psi
	0.16 ... 16 bar 16 ... 1600 kPa 2.3 ... 232 psi	16 bar 1600 kPa 232 psi	21 bar 2.1 MPa 305 psi	32 bar 3.2 MPa 464 psi
	0.63 ... 63 bar 63 ... 6300 kPa 9.1 ... 914 psi	63 bar 6300 kPa 914 psi	67 bar 6.7 MPa 972 psi	100 bar 10 MPa 1450 psi
Lower measuring limit				
• Measuring cell with silicone oil filling	100 mbar a/10 kPa a/1.45 psi a			
• Measuring cell with inert filling liquid	100 mbar a/10 kPa a/1.45 psi a			
• Measuring cell with Neobee	100 mbar a/10 kPa a/1.45 psi a			
Upper measuring limit	100% of max. measuring span			
Input of absolute pressure, with front-flush diaphragm				
Measured variable	Absolute pressure, front-flush			
Measuring span (infinitely adjustable) or nominal measuring range and max. permissible test pressure	**HART**	**PROFIBUS PA/ FOUNDATION Fieldbus**		
	Measuring span	Nominal measuring range	Max. operating pressure MAWP (PS)	Max. perm. test pressure
	43 ... 1300 mbar a 4.3 ... 130 kPa a 17 ... 525 inH_2O a	1300 mbar a 130 kPa a 525 inH_2O a	2.6 bar a 260 kPa a 37.7 psi a	10 bar a 1 MPa a 145 psi a
	160 ... 5000 mbar a 16 ... 500 kPa a 2.32 ... 72.5 psi a	5000 mbar a 500 kPa a 72.5 psi a	10 bar a 1 MPa a 145 psi a	30 bar a 3 MPa a 435 psi a
	1 ... 30 bar a 0.1 ... 3 MPa a 14.5 ... 435 psi a	30 bar a 3 MPa a 435 psi a	45 bar a 4.5 MPa a 653 psi a	100 bar a 10 MPa a 1450 psi a
	Depending on the process connection, the measuring span may differ from these values			
Lower measuring limit	0 mbar a/0 kPa a/0 psi a			
Upper measuring limit	100 % of max. measuring span			
Output	**HART**	**PROFIBUS PA/ FOUNDATION Fieldbus**		
Output signal	4 ... 20 mA	Digital PROFIBUS PA or FOUNDATION Fieldbus signal		
Physical bus	-	IEC 61158-2		
Protection against polarity reversal	Protected against short-circuit and polarity reversal. Each connection against the other with max. supply voltage.			
Electrical damping (step width 0.1 s)	Set to 2 s (0 ... 100 s)			

© Siemens 2020

SITRANS P300 for gauge and absolute pressure		
Measuring accuracy for gauge pressure	According to IEC 60770-1	
Reference conditions	• Increasing characteristic • Lower range value 0 bar/kPa/psi • Stainless steel seal diaphragm • Measuring cell with silicone oil • Room temperature 25 °C (77 °F)	
Measuring span ratio r (spread, Turn-Down)	r = max. measuring span/set measuring span or nominal measuring range	
Error in measurement at limit setting incl. hysteresis and reproducibility		
• Linear characteristic		
- 250 mbar/25 kPa/3.6 psi	r ≤ 1.25 : 1.25 < r ≤ 30 :	≤ 0.075 % ≤ (0.008 · r + 0.065) %
- 1 bar/100 kPa/14.5 psi 4 bar/400 kPa/58 psi 16 bar/1.6 MPa/232 psi 63 bar/6.3 MPa/914 psi 160 bar/16 MPa/2321 psi	r ≤ 5 : 5 < r ≤ 100 :	≤ 0.075 % ≤ (0.005 · r + 0.05) %
- 400 bar/40 MPa/5802 psi	r ≤ 3 : 3 < r ≤ 10 : 10 < r ≤ 100 :	≤ 0.075 % ≤ (0.0029 · r + 0.071) % ≤ (0.005 · r + 0.05) %
Influence of ambient temperature (in percent per 28 °C (50 °F))		
• 250 mbar/25 kPa/3.6 psi	≤ (0.16 · r + 0.1) %	
• 1 bar/100 kPa/14.5 psi 4 bar/400 kPa/58 psi 16 bar/1.6 MPa/232 psi 63 bar/6.3 MPa/914 psi 160 bar/16 MPa/2321 psi 400 bar/40 MPa/5802 psi	≤ (0.07 · r + 0.08) %	
Long-term stability (temperature change ± 30 °C (± 54 °F))		
• 250 mbar/25 kPa/3.6 psi	≤ (0.25 · r) % per year	
• 1 bar/100 kPa/14.5 psi 4 bar/400 kPa/58 psi	≤ (0.25 · r) % in 5 years	
• 16 bar/1.6 MPa/232 psi 63 bar/6.3 MPa/914 psi 160 bar/16 MPa/2321 psi 400 bar/40 MPa/5802 psi	≤ (0.125 · r) % in 5 years	
Effect of mounting position	≤ 0.05 mbar/0.005 kPa/0.000725 psi per 10° inclination (zero point correction is possible with position error compensation)	
Effect of auxiliary power supply (in percent per change in voltage)	0.005 % per 1 V	
Measuring value resolution for PROFIBUS PA and FOUNDATION Fieldbus	$3 \cdot 10^{-5}$ of the nominal measuring range	

© Siemens 2020

SITRANS P300 for gauge and absolute pressure		
Measuring accuracy for absolute pressure	According to IEC 60770-1	
Reference conditions	• Increasing characteristic • Lower range value 0 bar/kPa/psi • Stainless steel seal diaphragm • Measuring cell with silicone oil • Room temperature 25 °C (77 °F)	
Measuring span ratio r (spread, Turn-Down)	r = max. measuring span/set measuring span or nominal measuring range	
Error in measurement at limit setting incl. hysteresis and reproducibility		
• Linear characteristic		
- r ≤ 10	≤ 0.1 %	
- 10 < r ≤ 30	≤ 0.2 %	
Influence of ambient temperature (in percent per 28 °C (50 °F))		
• 250 mbar a/25 kPa a/3.6 psi a	≤ (0.15 · r + 0.1) %	
• 1300 mbar a/130 kPa a/18.8 psi a 5 bar a/500 kPa a/72.5 psi a 30 bar a/3000 kPa a/435 psi a	≤ (0.08 · r + 0.16) %	
Long-term stability (temperature change ± 30 °C (± 54 °F))	≤ (0.25 · r) % in 5 years	
Effect of mounting position (in pressure per change in angle)	≤ 0.05 mbar/0.005 kPa/0.000725 psi per 10° inclination (zero point correction is possible with position error compensation)	
Effect of auxiliary power supply (in percent per change in voltage)	0.005 % per 1 V	
Measuring value resolution for PROFIBUS PA and FOUNDATION Fieldbus	$3 \cdot 10^{-5}$ of the rated nominal measuring range	
Measuring accuracy for gauge and absolute pressure, with front-flush diaphragm	According to IEC 60770-1	
Reference conditions	• Increasing characteristic • Lower range value 0 bar/kPa/psi • Stainless steel seal diaphragm • Measuring cell with silicone oil • Room temperature 25 °C (77 °F)	
Measuring span ratio r (spread, Turn-Down)	r = max. measuring span/set measuring span or nominal measuring range	
Error in measurement at limit setting incl. hysteresis and reproducibility		
• Linear characteristic	**Gauge pressure, with front-flush diaphragm**	**Absolute pressure, with front-flush diaphragm**
- r ≤ 5	≤ 0.075 %	-
- 5 < r ≤ 100	≤ (0.005 · r + 0.05) %	-
- r ≤ 10	-	≤ 0.2 %
- 10 < r ≤ 30	-	≤ 0.4 %
Influence of ambient temperature (as percentage per 28 °C (50 °F))	≤ (0.08 · r + 0.16) %	≤ (0.16 · r + 0.24) %
Effect of temperature of medium (in pressure per temperature change)		
• Temperature difference between temperature of medium and ambient temperature	3 mbar/0.3 kPa/0.04 psi per 10 K	
Long-term stability (temperature change ± 30 °C (± 54 °F))	(0.25 · r) % in 5 years	
Effect of mounting position (in pressure per change in angle)	0.4 mbar/0.04 kPa/0.006 per 10° inclination (zero point correction is possible with position error compensation)	
Effect of auxiliary power supply (in percent per change in voltage)	0.005 % per 1 V	
Measuring value resolution for PROFIBUS PA and FOUNDATION Fieldbus	$3 \cdot 10^{-5}$ of the nominal measuring range	

© Siemens 2020

SITRANS P300 for gauge and absolute pressure	
Operating conditions	
Installation conditions	
Ambient temperature	Observe the temperature class in areas subject to explosion hazard.
• Measuring cell with silicone oil	-40 ... +85 °C (-40 ... +185 °F)
• Measuring cell with Neobee oil (FDA-compliant, with flush-mounted diaphragm)	-10 ... +85 °C (14 ... +185 °F)
• Measuring cell with inert liquid	-40 ... +85 °C (-40 ... +185 °F)
• Display readable	-30 ... +85 °C (-22 ... +185 °F)
• Storage temperature	-50 ... +85 °C (-58 ... +185 °F) (for Neobee: -20 ... +85 °C (-4 ... +185 °F)) (for temperature oil: -10 ... + 85 °C (14 ... +165 °F))
Climatic class	
Condensation	Relative humidity 0 ... 100 % Condensation permissible, suitable for use in the tropics
Degree of protection	
• according to EN 60529	IP65, IP68
• according to NEMA 250	IP65, IP68, Type 4X, enclosure cleaning, resistant to lyes, steam to 150 °C (302 °F)
Electromagnetic Compatibility	
• Emitted interference and interference immunity	Acc. to IEC 61326 and NAMUR NE 21
Medium conditions	
Temperature of medium	
• Measuring cell with silicone oil	-40 ... +100 °C (-40 ... +212 °F)
• Measuring cell with silicone oil (FDA-compliant, with flush-mounted diaphragm)	-40 ... +150 °C (-40 ... +302 °F)
• Measuring cell with Neobee oil "Measuring cell with Neobee oil (FDA-compliant, with flush-mounted diaphragm)	-10 ... +150 °C (-14 ... +302 °F)
• Measuring cell with silicone oil, with temperature decoupler (only for gauge pressure version with flush-mounted diaphragm)	-40 ... +200 °C (-40 ... +392 °F)
• Measuring cell with Neobee oil, with temperature decoupler (only for gauge pressure version with flush-mounted diaphragm)	-10 ... +200 °C (14 ... +392 °F)
• Measuring cell with inert liquid	-20 ... +100 °C (-4 ... +212 °F)
• Measuring cell with high-temperature oil (only for gauge pressure version with flush-mounted diaphragm)	-10 ... +250 °C (14 ... 482 °F)
Design (standard version)	
Weight (without options)	Approx. 800 g (1.8 lb)
Enclosure material	Stainless steel, mat. no. 1.4301/304
Material of parts in contact with the medium	
• Connection shank	Stainless steel, mat. no. 1.4404/316L or Hastelloy C276, mat. no. 2.4819
• Oval flange	Stainless steel, mat. no. 1.4404/316L
• Seal diaphragm	Stainless steel, mat. no. 1.4404/316L or Hastelloy C276, mat. no. 2.4819
• Measuring cell filling	• Silicone oil • Inert filling liquid
Process connection	• G½B to EN 837-1 • Female thread ½-14 NPT • Oval flange PN 160 (MAWP 2320 psi) with fastening thread: -$^{7}/_{16}$ -20 UNF to IEC 61518/DIN EN 61518 - M10 as per DIN 19213

© Siemens 2020

SITRANS P300 for gauge and absolute pressure		
Design (version with front-flush diaphragm)		
Weight (without options)	approx. 1 ... 13 kg (2.2 ... 29 lb)	
Enclosure material	Stainless steel, mat. no. 1.4301/304	
Material of parts in contact with the medium		
• Process connection	Stainless steel, mat. no. 1.4404/316L	
• Seal diaphragm	Stainless steel, mat. no. 1.4404/316L	
• Measuring cell filling	• Silicone oil • Inert filling liquid • FDA compliant fill fluid (Neobee oil)	
Process connection	• Flanges as per EN and ASME • F&B and pharmaceutical flanges	
Surface quality touched-by-media	R_a-values ≤ 0.8 µm (32 µ-inch)/welds $R_{a)}$ ≤ 1.6 µm (64 µ-inch) (Process connections acc. to 3A; R_a-values ≤ 0.8 µm (32 µ-inch)/welds R_a ≤ 0.8 µm (32 µ-inch)	
Power supply U_H	**HART**	**PROFIBUS PA/FOUNDATION Fieldbus**
Terminal voltage on transmitter	10.5 ... 42 V DC for intrinsically safe operation: 10.5 ... 30 V DC	
Power supply	-	Supplied though bus
Separate supply voltage	-	Not necessary
Bus voltage		
• Without Ex	-	9 ... 32 V
• With intrinsically-safe operation	-	9 ... 24 V
Current consumption		
• Max. basic current	-	12.5 mA
• Start-up current ≤ basic current	-	Yes
• Max. fault current in the event of a fault	-	15.5 mA
Fault disconnection electronics (FDE) available	-	Yes

© Siemens 2020

SITRANS P300 for gauge and absolute pressure		
Certificates and approvals	**HART**	**PROFIBUS PA/ FOUNDATION Fieldbus**
Classification according to PED 2014/68/EU	For gases of fluid group 1 and liquids of fluid group 1; complies with requirements of Article 4, paragraph 3 (sound engineering practice)	
Water, waste water	Pending	
Explosion protection		
Intrinsic safety "i"	PTB 05 ATEX 2048	
• Marking	II1/2 G Ex ia IIC/IIB T4/T5/T6 Ga/Gb	
• Permissible ambient temperature		
- Temperature class T4	-40 ... +85 °C (-40 ... +185 °F)	
- Temperature class T5	-40 ... +70 °C (-40 ... +158 °F)	
- Temperature class T6	-40 ... +60 °C (-40 ... +140 °F)	
• Connection	To certified intrinsically-safe circuits with peak values: U_i = 30 V, I_i = 100 mA, P_i = 750 mW, R_i = 300 Ω	To certified intrinsically-safe circuits with peak values: FISCO supply unit: U_i = 17.5 V, I_i = 380 mA, P_i = 5.32 W Linear barrier: U_i = 24 V, I_i = 250 mA, P_i = 1.2 W
• Effective inner capacitance:	C_i = 6 nF	C_i = 1.1 nF
• Effective internal inductance:	L_i = 0.4 mH	$L_i \leq 7$ µH
Explosion protection to FM for USA and Canada (cFM_{US})		
• Identification (DIP) or (IS); (NI)	Certificate of Compliance 3025099 CL I, DIV 1, GP ABCD T4 ... T6; CL II, DIV 1, GP EFG; CL III; CL I, ZN 0/1 AEx ia IIC T4 ... T6; CL I, DIV 2, GP ABCD T4 ... T6; CL II, DIV 2, GP FG; CL III	
• Identification (DIP) or (IS)	Certificate of Compliance 3025099C CL I, DIV 1, GP ABCD T4 ... T6; CL II, DIV 1, GP EFG; CL III; Ex ia IIC 4 ... T6; CL I, DIV 2, GP ABCD T4 ... T6; CL II, DIV 2, GP FG; CL III	
Dust explosion protection for zone 20/21/22	PTB 05 ATEX 2048	
• Marking	II 1 D Ex ia IIIC T120 °C Da II 1/2 D Ex ia IIIC T120 °C Da/Db II 2 D Ex ib IIIC T120 °C Db	
• Permissible ambient temperature		
- Temperature class T4	-40 ... +85 °C (-40 ... +185 °F) (in the case of mineral glass windows only -20 ... +85 °C (-4 ... +185 °F))	
- Temperature class T5	-40 ... +70 °C (-40 ... +158 °F) (in the case of mineral glass windows only-20 ... +70 °C (-4 ... +158 °F))	
- Temperature class T6	-40 ... +60 °C (-40 ... +140 °F) (in the case of mineral glass windows only -20 ... +60 °C (-4 ... +140 °F))	
• Connection	To certified intrinsically-safe circuits with peak values: U_i = 30 V, I_i = 100 mA, P_i = 750 mW	To certified intrinsically-safe circuits with peak values: U_i = 24 V, I_i = 380 mA, P_i = 5.32 mW
• Effective inner capacitance:	C_i = 6 nF	C_i = 5 nF
• Effective internal inductance:	L_i = 0.4 µH	L_i = 10 µH
Type of protection Ex nA/nL/ic (Zone 2)	PTB 05 ATEX 2048	
• Marking	II 2/3 G Ex ic IIC/IIB T4/T5/T6 Gb/Gc II 2/3 G Ex nA IIC T4/T5/T6 Gb/Gc	
• Permissible ambient temperature		
- Temperature class T4	-40 ... +85 °C (-40 ... +185 °F) (in the case of mineral glass windows only -20 ... +85 °C (-4 ... +185 °F))	
- Temperature class T5	-40 ... +70 °C (-40 ... +158 °F) (in the case of mineral glass windows only -20 ... +70 °C (-4 ... +158 °F))	
- Temperature class T6	-40 ... +60 °C (-40 ... +140 °F) (in the case of mineral glass windows only -20 ... +60 °C (-4 ... +140 °F))	
• Ex nA/nL connection	To certified intrinsically-safe circuits with peak values: U_m = 45 V	To certified intrinsically-safe circuits with peak values: U_m = 32 V
• Ex ic connection	To certified intrinsically-safe circuits with peak values: U_i = 45 V	To certified intrinsically-safe circuits with peak values:U_i = 32 V
• Effective inner capacitance:	C_i = 6 nF	C_i = 5 nF
• Effective internal inductance:	L_i = 0.4 mH	L_i = 20 µH

© Siemens 2020

HART Communication	
HART communication	230 ... 1100 Ω
Protocol	HART Version 5.x
Software for computer	SIMATIC PDM
PROFIBUS PA communication	
Simultaneous communication with master class 2 (max.)	4
The address can be set using	Configuration tool or local operation (standard setting Address 126)
Cyclic data usage	
• Output byte	5 (one measured value) or 10 (two measured values)
• Input byte	0.1 or 2 (totalizer mode and reset function for dosing)
• Internal preprocessing	
Device profile	PROFIBUS PA Profile for Process Control Devices Version 3.0, class B
Function blocks	2
• Analog input	
- Adaptation to customer-specific process variables	Yes, linearly rising or falling characteristic
- Electrical damping adjustable	0 … 100 s
- Simulation function	Input /Output
- Failure function	parameterizable (last good value, substitute value, incorrect value)
- Limit monitoring	Yes, one upper and lower warning limit and one alarm limit respectively
• Register (totalizer)	Can be reset, preset, optional direction of counting, simulation function of register output
- Failure mode	parameterizable (summation with last good value, continuous summation, summation with incorrect value)
- Limit monitoring	One upper and lower warning limit and one alarm limit respectively
• Physical block	1
Transducer blocks	2
• Pressure transducer block	
- Can be calibrated by applying two pressures	Yes
- Monitoring of sensor limits	Yes
- Specification of a container characteristic with	Max. 30 nodes
- Simulation function for measured pressure value and sensor temperature	Constant value or over parameterizable ramp function

FOUNDATION Fieldbus communication	
Function blocks	3 function blocks analog input, 1 function block PID
• Analog input	
- Adaptation to customer-specific process variables	Yes, linearly rising or falling characteristic
- Electrical damping, adjustable	0 ... 100 s
- Simulation function	Output/input (can be locked within the device with a bridge)
- Failure mode	parameterizable (last good value, substitute value, incorrect value)
- Limit monitoring	Yes, one upper and lower warning limit and one alarm limit respectively
- Square-rooted characteristic for flow measurement	Yes
• PID	Standard FOUNDATION Fieldbus function block
• Physical block	1 resource block
Transducer blocks	1 transducer block Pressure with calibration, 1 transducer block LCD
• Pressure transducer block	
- Can be calibrated by applying two pressures	Yes
- Monitoring of sensor limits	Yes
- Simulation function: Measured pressure value, sensor temperature and electronics temperature	Constant value or over parameterizable ramp function

© Siemens 2020

Selection and Ordering data		Article No.
SITRANS P300 pressure transmitters for relative and absolute pressure, single-chamber measuring enclosure, rating plate inscription in English		
4 ... 20 mA/HART ↗		**7MF8023-**
PROFIBUS PA ↗		**7MF8024-**
FOUNDATION Fieldbus (FF) ↗		**7MF8025-**
↗ Click on the Article No. for the online configuration in the PIA Life Cycle Portal.		■■■■■-■■■■
Measuring cell filling	**Measuring cell cleaning**	
Silicone oil	normal	1
Inert liquid	Cleanliness level 2 to DIN 25410	3
Measuring span (min. ... max.)		
8.3 ... 250 mbar	(0.12 ... 3.63 psi)	A
0.01 ... 1 bar	(0.145 ... 14.5 psi)	B
0.04 ... 4 bar	(0.58 ... 58 psi)	C
0.16 ...16 bar	(2.32 ... 232 psi)	D
0.63 ... 63 bar	(9.14 ... 914 psi)	E
1.6 ... 160 bar	(23.2 ... 2320 psi)	F
4 ... 400 bar	(58 ... 5802 psi)	G
8.34 ... 250 mbar a	(0.13 ... 3.63 psi a)	Q
43.34 ... 1300 mbar a	(0.63 ... 18.86 psi a)	S
0.17 ... 5 bar a	(2.43 ... 72.5 psi a)	T
1 ... 30 bar a	(14.6 ... 435 psi a)	U
Wetted parts materials		
Seal diaphragm	Measuring cell	
Stainless steel	Stainless steel	A
Hastelloy	Stainless steel	B
Hastelloy	Hastelloy	C
Version for diaphragm seals in conjunction with process connector "female thread ½-14 NPT" **(recommended version)** 1) 2) 3) 4) 5)		Y
Process connection		
• Connection shank G½B to EN 837-1		0
• Female thread ½-14 NPT		1
• Stainless steel oval flange with process connection (Oval flange has no female thread) 6)		
- Mounting thread $^{7}/_{16}$-20 UNF to IEC 61518/DIN EN 61518		2
- Mounting thread M10 to DIN 19213		3
- Mounting thread M12 to DIN 19213		4
• Male thread M20 x 1.5		5
• Male thread ½ -14 NPT		6
Non-wetted parts materials		
• Stainless steel, deep-drawn and electrolytically polished		4
Version		
• Standard versions		1
Explosion protection		
• None		A
• With ATEX, Type of protection:		
- "Intrinsic safety (Ex ia)"		B
• Zone 20/21/22 7)		C
• Ex nA/nL (Zone 2) 8)		E
• with FM "intrinsic safety" (cFM_{US})		M
Electrical connection / cable entry		
• Screwed gland M20x1.5 (polyamide) 9)		A
• Screwed gland M20x1.5 (metal)		B
• Screwed gland M20x1.5 (stainless steel)		C
• Device plug M12 (stainless steel), without cable socket)		G
• Screwed gland ½-14 NPT metal thread 10)		H
• Screwed gland ½-14 NPT stainless steel thread		J

Selection and Ordering data	Article No.
SITRANS P300 pressure transmitters for relative and absolute pressure, single-chamber measuring enclosure, rating plate inscription in English	
4 ... 20 mA/HART	**7MF8023-**
PROFIBUS PA	**7MF8024-**
FOUNDATION Fieldbus (FF)	**7MF8025-**
	■■■■■-■■■■
Display	
• Without display, with keys, closed lid	1
• With display and keys, closed lid 11)	2
• With display and keys, lid with polycarbonate disc	4
• (setting on HART devices: mA, with PROFIBUS PA and FOUNDATION Fieldbus equipment: pressure units) 11)	
• With display and keys (setting acc. to specifications, Order code "Y21" or "Y22" required), lid with polycarbonate disc 11)	5
• With display and keys, lid with glass pane (setting on HART devices: mA, with PROFIBUS and FOUNDATION Fieldbus equipment: pressure units) 11)	6
• With display and keys (setting acc. to specifications, Order code "Y21" or "Y22" required), lid with glass pane 11)	7

Power supply units see Chap. 7 "Supplementary Components".

A quick-start guide is included in the scope of delivery of the device.

1) When also ordering the quality test certificate (factory calibration) according to IEC 60770-2 for transmitters with mounted diaphragm seals: Order this certificate only together with the remote seals. The measuring accuracy of the total combination is certified here.

2) If the inspection certificate 3.1 is ordered for the transmitter with mounted diaphragm seals this certificate must also be ordered with the respective remote seals.

3) The diaphragm seal is to be specified with a separate order number and must be included with the transmitter order number, for example 7MF802.-..Y..-.... and 7MF4900-1...-.B

4) The standard measuring cell filling for configurations with remote seals (Y) is silicone oil.

5) Remote seal for direct mounting only available in combination with process connection ½-14 NPT.

6) M10 fastening thread: Max. measuring span 160 bar (2320 psi) 7/16-20 UNF and M12 fastening thread: Max. measuring span 400 bar (5802 psi)

7) Only available together with electrical connection option A

8) Only available together with electrical connection options B, C or G.

9) Only together with HART electronics.

10) Without cable gland.

11) Display cannot be turned.

© Siemens 2020

Selection and Ordering data	Article No.
SITRANS P300 pressure transmitters for relative and absolute pressure with front-flush membrane, single-chamber measuring enclosure, rating plate inscription in English	
4 ... 20 mA/HART ↗	**7MF8123-**
PROFIBUS PA ↗	**7MF8124-**
FOUNDATION Fieldbus (FF) ↗	**7MF8125-**
↗ Click on the Article No. for the online configuration in the PIA Life Cycle Portal.	■■■■■-■■■■
Measuring cell filling / **Measuring cell cleaning**	
Silicone oil / normal	1
Inert liquid	3
FDA compliant fill fluid	
• Neobee oil / normal	4
Measuring span (min. ... max.)	
0.01 ... 1 bar (0.15 ... 14.5 psi)	B
0.04 ... 4 bar (0.58 ... 58 psi)	C
0.16 ... 16 bar (2.32 ... 232 psi)	D
0.63 ... 63 bar (9.14 ... 914 psi)	E
43.34 ... 1300 mbar a[1] (0.63 ... 18.86 psi a)[1]	S
0.17 ... 5 bar a[1] (2.43 ... 72.5 psi a)[1]	T
1 ... 30 bar a[1] (14.6 ... 435 psi a)[1]	U
Wetted parts materials Seal diaphragm / Measuring cell	
Stainless steel / Stainless steel	A
Hastelloy[2] / Stainless steel	B
Process connection	
• Flange version with Order code M.., N.., R.. or Q.. (see "Further designs")	7
Non-wetted parts materials	
• Stainless steel, deep-drawn and electrolytically polished	4
Version	
• Standard versions	1
Explosion protection	
• None	A
• With ATEX, Type of protection:	
- "Intrinsic safety (Ex ia)"	B
• Zone 20/21/22[3]	C
• Ex nA/nL (Zone 2)[4]	E
• with FM "intrinsic safety" (cFM_{US})	M
Electrical connection / cable entry	
• Screwed gland M20x1.5 (polyamide)[5]	A
• Screwed gland M20x1.5 (metal)	B
• Screwed gland M20x1.5 (stainless steel)	C
• Device plug M12 (stainless steel), without cable socket)	G
• Screwed gland ½-14 NPT metal thread [6]	H
• Screwed gland ½-14 NPT stainless steel thread [6]	J

Selection and Ordering data	Article No.
SITRANS P300 pressure transmitters for relative and absolute pressure with front-flush membrane, single-chamber measuring enclosure, rating plate inscription in English	
4 ... 20 mA/HART	**7MF8123-**
PROFIBUS PA	**7MF8124-**
FOUNDATION Fieldbus (FF)	**7MF8125-**
	■■■■■-■■■■
Display	
• Without display, with keys, closed lid	1
• With display and keys, closed lid[7]	2
• With display and keys, lid with polycarbonate disc (setting on HART devices: mA, with PROFIBUS PA and FOUNDATION Fieldbus equipment: pressure units)[7]	4
• With display and keys (setting acc. to specifications, Order code "Y21" or "Y22" required), lid with polycarbonate disc[7]	5
• With display and keys, lid with glass pane (setting on HART devices: mA, with PROFIBUS PA and FOUNDATION Fieldbus equipment: pressure units)[7]	6
• With display and keys (setting acc. to specifications, Order code "Y21" or "Y22" required), lid with glass pane[7]	7

Power supply units see Chap. 7 "Supplementary Components"

A quick-start guide is included in the scope of delivery of the device.

1) Not with temperature decoupler P00, not for process connections R01, R02, R04, R10 and R11, and can only be ordered in conjunction with silicone oil.
2) Only available for flanges with options M.., N.. and Q..
3) Only together with electrical connection option A.
4) Only available together with electrical connection options B, C or G.
5) Only together with HART electronics.
6) Without cable gland.
7) Display cannot be turned.

© Siemens 2020

Selection and Ordering data	Order code	HART	PA	FF
Further designs Add "**-Z**" to Article No. and specify Order code.				
Pressure transmitter with mounting bracket (2 shackles, 4 nuts, 4 U-plates, 1 angle) made of: made completely of stainless steel, for wall or pipe mounting	**A02**	✓	✓	✓
Cable socket for device plugs M12				
• Stainless steel	**A51**	✓	✓	✓
Rating plate inscription (instead of English)				
• German	**B10**	✓	✓	✓
• French	**B12**	✓	✓	✓
• Spanish	**B13**	✓	✓	✓
• Italian	**B14**	✓	✓	✓
English rating plate Pressure units in in$H_2$0 and/or psi	**B21**	✓	✓	✓
Quality test certificate, 5-point factory calibration (IEC 60770-2)[1)]	**C11**	✓	✓	✓
Inspection certificate[2)] Acc. to EN 10204-3.1	**C12**	✓	✓	✓
Factory certificate Acc. to EN 10204-2.2	**C14**	✓	✓	✓
Degree of protection IP65/IP68 (only for M20x1.5 and ½-14 NPT)	**D12**	✓	✓	✓
Degree of protection IP6k9k (only for M20x1.5)	**D46**	✓	✓	✓
CRN approval Canada (Canadian Registration Number)	**E22**	✓	✓	✓
Export approval Korea	**E11**	✓	✓	✓
Ex-protection Ex ia according to EAC Ex (Russia)	**E80**	✓	✓	✓
Ex Approval Ex ia/ib NEPSI	**E55**	✓	✓	✓
Only for SITRANS P300 with front-flush diaphragm (7MF81..-...)				
Flange to EN 1092-1, Form B1				
• DN 25, PN 40[3)]	**M11**	✓	✓	✓
• DN 40, PN 40	**M13**	✓	✓	✓
• DN 40, PN 100	**M23**	✓	✓	✓
• DN 50, PN 16	**M04**	✓	✓	✓
• DN 50, PN 40	**M14**	✓	✓	✓
• DN 80, PN 16	**M06**	✓	✓	✓
• DN 80, PN 40	**M16**	✓	✓	✓
Flanges to ASME B16.5				
• 1", class 150[4)]	**M40**	✓	✓	✓
• 1½", class 150	**M41**	✓	✓	✓
• 2", class 150	**M42**	✓	✓	✓
• 3", class 150	**M43**	✓	✓	✓
• 4", class 150	**M44**	✓	✓	✓
• 1", class 300[4)]	**M45**	✓	✓	✓
• 1½", class 300	**M46**	✓	✓	✓
• 2", class 300	**M47**	✓	✓	✓
• 3", class 300	**M48**	✓	✓	✓
• 4", class 300	**M49**	✓	✓	✓
Threaded connector to DIN 3852-2, form A, thread to ISO 228				
• G ¾"-A, front-flush[4)]	**R01**	✓	✓	✓
• G 1"-A, front-flush[4)]	**R02**	✓	✓	✓
• G 2"-A, front-flush	**R04**	✓	✓	✓
Tank connection[5)] Sealing is included in delivery				
• TG 52/50, PN 40	**R10**	✓	✓	✓
• TG 52/150, PN 40	**R11**	✓	✓	✓

Selection and Ordering data	Order code	HART	PA	FF
Further designs Add "**-Z**" to Article No. and specify Order code.				
Sanitary process connection according DIN 11851 (Dairy connection with slotted union nut)				
• DN 50, PN 25	**N04**	✓	✓	✓
• DN 80, PN 25	**N06**	✓	✓	✓
Tri-Clamp connection according DIN 32676/ISO 2852 3A compliant[6)]				
• DN 50/2", PN 16	**N14**	✓	✓	✓
• DN 65/2.5", PN 10	**N15**	✓	✓	✓
• Clamp 2" ISO 2852 PN 16	**N22**	✓	✓	✓
• Clamp 3" ISO 2852 PN 16	**N23**	✓	✓	✓
Varivent connection 3A and EHEDG compliant[6)]				
• Type N = 68 for Varivent enclosure DN 40 ... 125 and 1½" ... 6", PN 40	**N28**	✓	✓	✓
Temperature decoupler up to 200 °C[7)] for front-flush diaphragm version	**P00**	✓	✓	✓
Sanitary process connection to DRD				
• DN 50, PN 40	**M32**	✓	✓	✓
SMS threaded socket				
• 2"	**M73**	✓	✓	✓
• 2½"	**M74**	✓	✓	✓
• 3"	**M75**	✓	✓	✓
Sanitary process connection to NEUMO Bio-Connect screw connection 3A and EHEDG compliant[6)]				
• DN 50, PN 16	**Q05**	✓	✓	✓
• DN 65, PN 16	**Q06**	✓	✓	✓
• DN 80, PN 16	**Q07**	✓	✓	✓
• DN 100, PN 16	**Q08**	✓	✓	✓
• DN 2", PN 16	**Q13**	✓	✓	✓
• DN 2½", PN 16	**Q14**	✓	✓	✓
• DN 3", PN 16	**Q15**	✓	✓	✓
• DN 4", PN 16	**Q16**	✓	✓	✓
Sanitary process connection to NEUMO Bio-Connect S flange connection				
• DN 2", PN 16	**Q72**	✓	✓	✓

© Siemens 2020

Selection and Ordering data	Order code	HART	PA	FF
Further designs				
Add "**-Z**" to Article No. and specify Order code.				
Aseptic threaded socket to DIN 11864-1 Form A				
3A compliant[6]				
• DN 50, PN 25	**N33**	✓	✓	✓
• DN 65, PN 25	**N34**	✓	✓	✓
• DN 80, PN 25	**N35**	✓	✓	✓
• DN 100, PN 25	**N36**	✓	✓	✓
Aseptic flange with notch to DIN 11864-2 Form A				
3A compliant[6]				
• DN 50, PN 16	**N43**	✓	✓	✓
• DN 65, PN 16	**N44**	✓	✓	✓
• DN 80, PN 16	**N45**	✓	✓	✓
• DN 100, PN 16	**N46**	✓	✓	✓
Aseptic flange with groove to DIN 11864-2 Form A				
3A compliant[6]				
• DN 50, PN 16	**N43 + P11**	✓	✓	✓
• DN 65, PN 16	**N44 + P11**	✓	✓	✓
• DN 80, PN 16	**N45 + P11**	✓	✓	✓
• DN 100, PN 16	**N46 + P11**	✓	✓	✓
Aseptic clamp with groove to DIN 11864-3 FormA				
3A compliant[6]				
• DN 50, PN 25	**N53**	✓	✓	✓
• DN 65, PN 25	**N54**	✓	✓	✓
• DN 80, PN 16	**N55**	✓	✓	✓
• DN 100, PN 16	**N56**	✓	✓	✓

Selection and Ordering data	Order code	HART	PA	FF
Additional data				
Please add "**-Z**" to Article No. and specify Order code(s) and plain text.				
Measuring range to be set Specify in plain text (max. 5 characters): Y01: ... up to ... mbar, bar, kPa, MPa, psi	**Y01**	✓	✓[8]	
Stainless steel tag plate and entry in device variable (measuring point description) Max. 16 characters, specify in plain text: Y15:	**Y15**	✓	✓	✓
Measuring point text (entry in device variable) Max. 27 characters, specify in plain text: Y16:	**Y16**	✓	✓	✓
Entry of HART TAG Max. 8 characters, specify in plain text: Y17:	**Y17**	✓		
Setting of the display in pressure units Specify in plain text (standard setting: bar): Y21: mbar, bar, kPa, MPa, psi, ... Note: The following pressure units can be selected: bar, mbar, mm H_2O*), inH_2O*), ftH_2O*), mmHG, inHG, psi, Pa, kPa, MPa, g/cm^2, kg/cm^2, Torr, ATM or % *) ref. temperature 20 °C	**Y21**	✓	✓	✓
Setting of the display in non-pressure units[9] Specify in plain text: Y22: ..... up to ..... l, m^3, m, USg, ... (specification of measuring range in pressure units "**Y01**" is essential, unit with max. 5 characters)	**Y22 + Y01**	✓		
Preset bus address (possible between 1 ... 126) Specify in plain text: Y25:	**Y25**		✓	✓

Factory mounting of valve manifolds, see accessories.

Only Y01, Y15, Y16, Y17, Y21, Y22 and Y25 can be factory preset

✓ = available

Ordering example

Item line:	7MF8023-1DB24-1AB7-Z
B line:	A02 + Y01 + Y21
C line:	Y01: 1 ... 10 bar (14.5 ... 145 psi)
C line:	Y21: bar (psi)

1) When also ordering the quality test certificate (factory calibration) according to IEC 60770-2 for transmitters with mounted diaphragm seals: Order this certificate only together with the remote seals. The measuring accuracy of the total combination is certified here.

2) If the inspection certificate 3.1 is ordered for the transmitter with mounted diaphragm seals this certificate must also be ordered with the respective remote seals.

3) Special seal in Viton included in the scope of delivery (FKM; temperature range -20 ... +200 °C (-4 ... +392 °F))

4) Cannot be combined with Order code P00. Can only be ordered with silicone oil measuring cell filling.

5) The weldable socket can be ordered under accessories.

6) 3A compliance ensured only when 3A compliant sealing rings are used.

7) Conformity according to 3A and EHEDG. The maximum permissible temperatures of the medium depend on the respective cell fillings (see medium conditions).

8) Measuring accuracies for PROFIBUS PA transmitters with Option Y01 are calculated in the same way as for HART devices.

9) Preset values can only be changed over SIMATIC PDM.

© Siemens 2020

Dimensional drawings

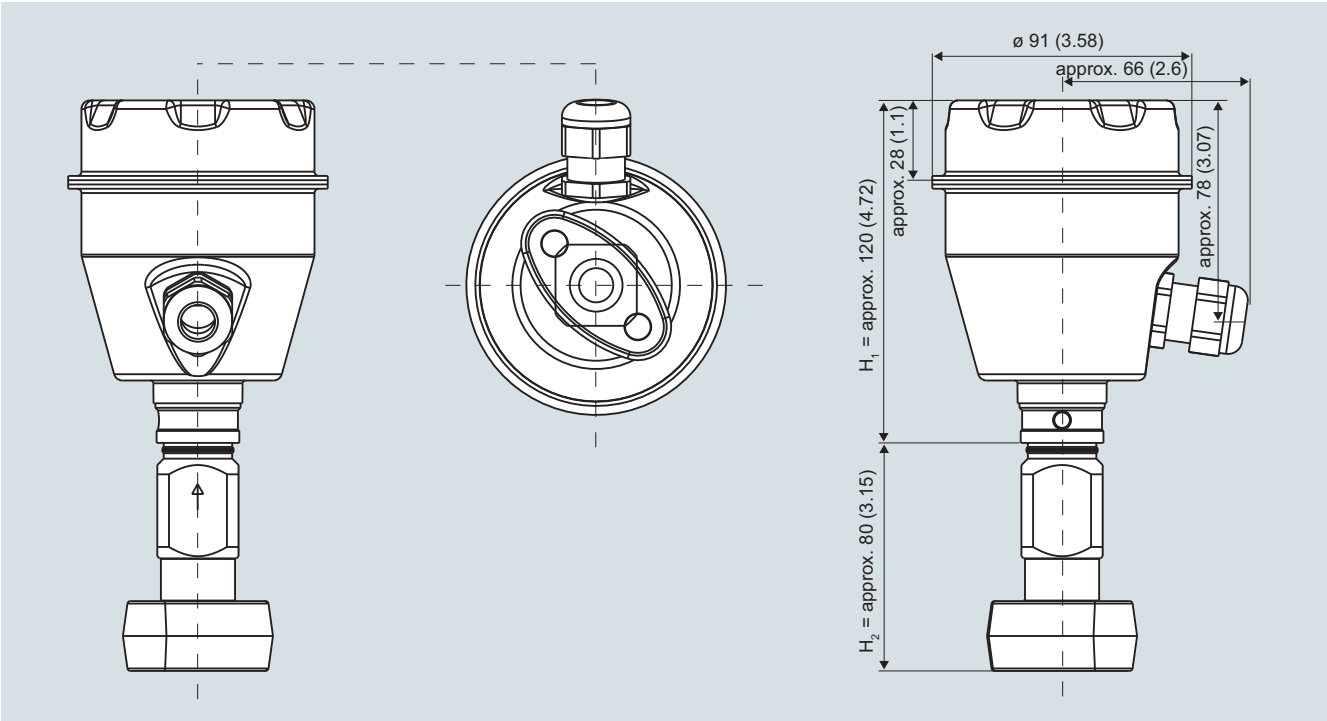

SITRANS P300, with oval flange, dimensions in mm (inch)

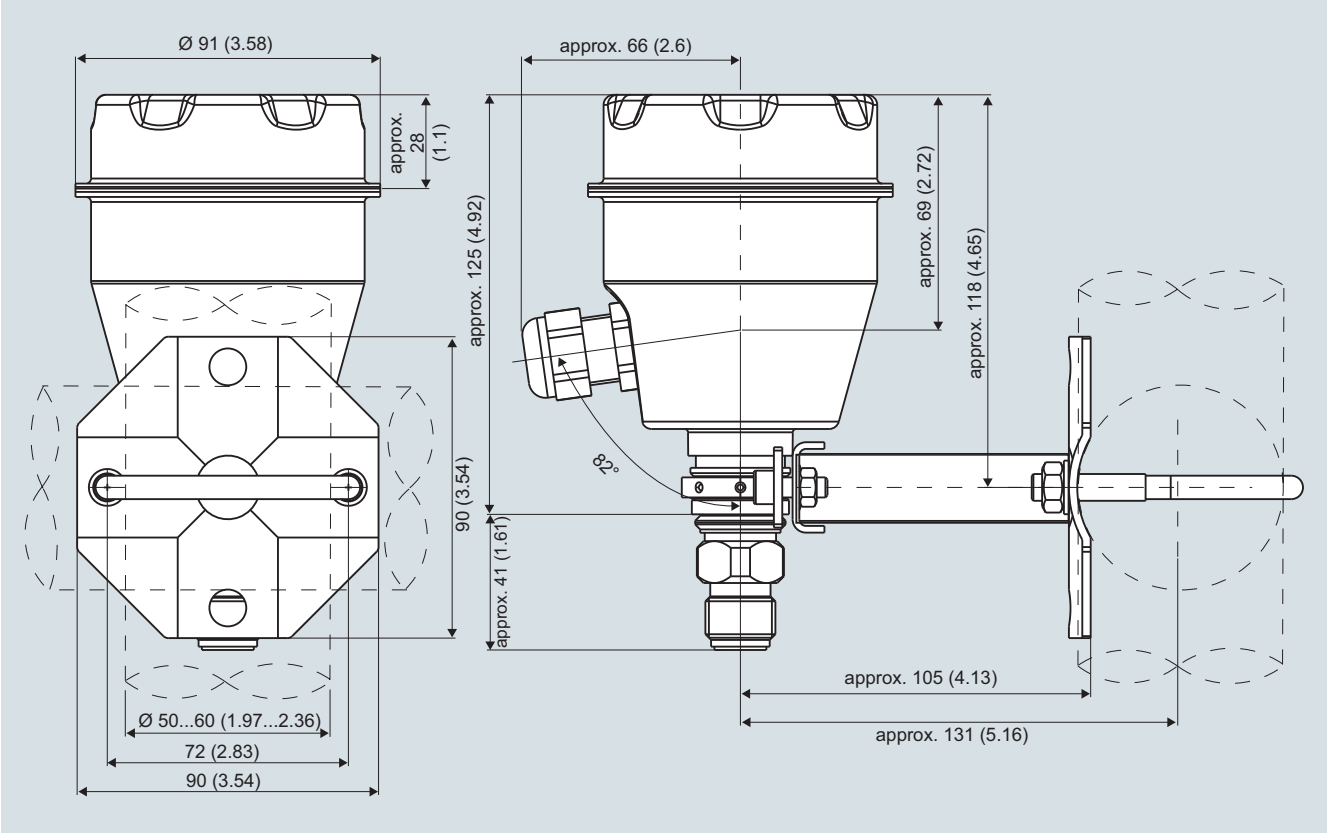

SITRANS P300, process connection M20 x 1.5, with mounted mounting bracket, dimensions in mm (inch)

© Siemens 2020

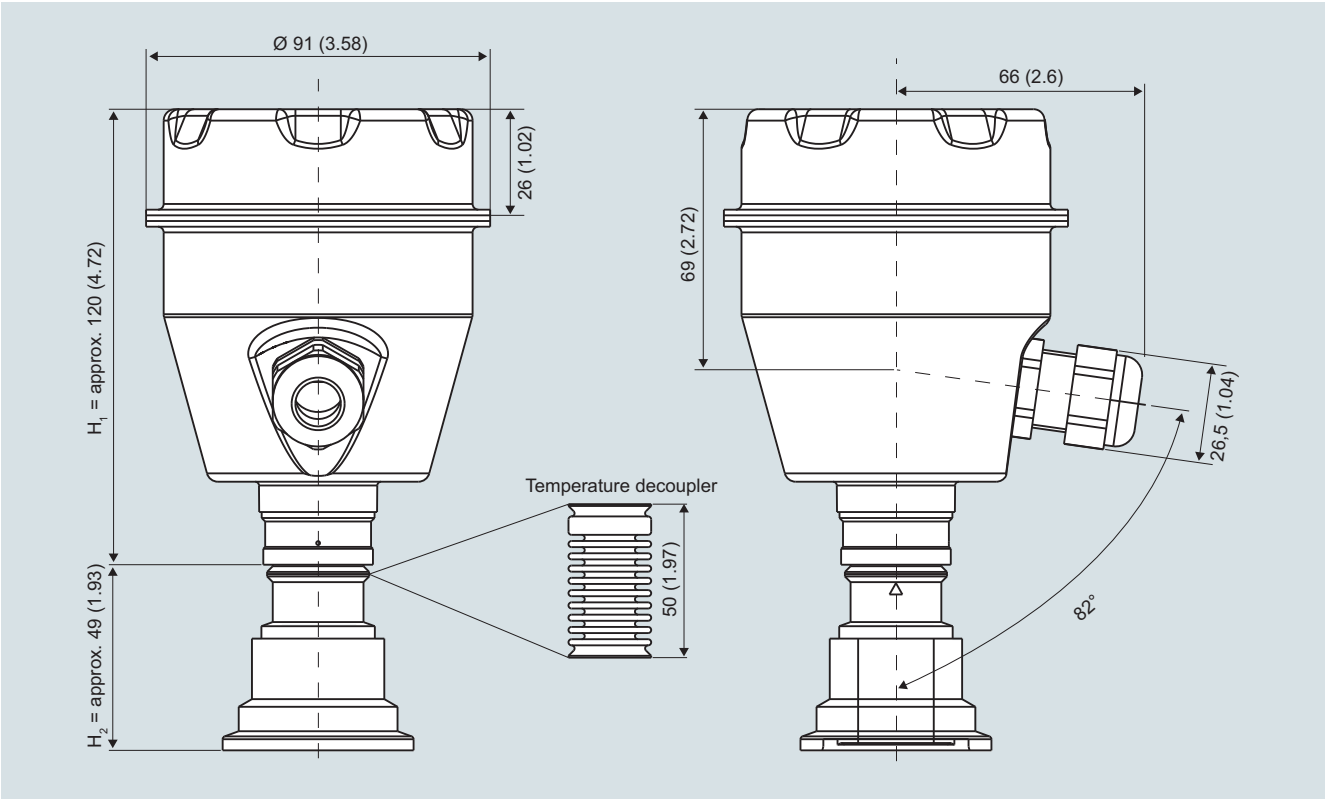

SITRANS P300, front-flush, dimensions in mm (inch)

The diagram shows a SITRANS P300 with an example of a flange. In this drawing the height is subdivided into H_1 and H_2.

H_1 = Height of the SITRANS P300 up to a defined cross-section

H_2 = Height of the flange up to this defined cross-section

Only the height H_2 is indicated in the dimensions of the flanges.

© Siemens 2020

Flanges according to EN and ASME

Flange according to EN

EN 1092-1

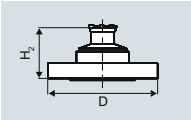

Order code	DN	PN	∅D	H_2
M11	25	40	115 mm (4.5")	Approx. 52 mm (2")
M13	40	40	150 mm (5.9")	
M23	40	100	170 mm (6.7")	
M04	50	16	165 mm (6.5")	
M14	50	40	165 mm (6.5")	
M06	80	16	200 mm (7.9")	
M16	80	40	200 mm (7.9")	

Flanges according to ASME

ASME B16.5

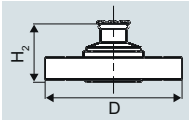

Order code	DN	PN	∅D	H_2
M40	1"	150	110 mm (4.3")	Approx. 52 mm (2")
M41	1½"	150	130 mm (5.1")	
M42	2"	150	150 mm (5.9")	
M43	3"	150	190 mm (7.5")	
M44	4"	150	230 mm (9.1")	
M46	1½"	300	155 mm (6.1")	
M47	2"	300	165 mm (6.5")	
M48	3"	300	210 mm (8.1")	
M49	4"	300	255 mm (10.0")	

NuG and pharmaceutical connections

Connections to DIN

DIN 11851 (milk pipe union with slotted union nut)

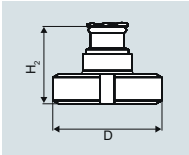

Order code	DN	PN	∅D	H_2
N04	50	25	92 mm (3.6")	Approx. 52 mm (2")
N06	80	25	127 mm (5.0")	

Tri-Clamp nach DIN 32676

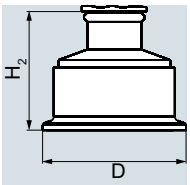

Order code	DN	PN	∅D	H_2
N14	50	16	64 mm (2.5")	Approx. 52 mm (2")
N15	65	10	91 mm (3.6")	

Other connections

Varivent connection

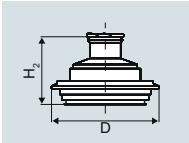

Order code	DN	PN	∅D	H_2
N28	40 ... 125	40	84 mm (3.3")	Approx. 52 mm (2")

Sanitary process connection to DRD

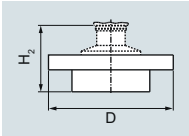

Order code	DN	PN	∅D	H_2
M32	50	40	105 mm (4.1")	Approx. 52 mm (2")

Sanitary process screw connection to NEUMO Bio-Connect

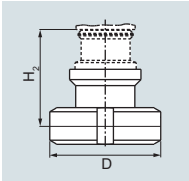

Order code	DN	PN	∅D	H_2
Q05	50	16	82 mm (3.2")	Approx. 52 mm (2")
Q06	65	16	105 mm (4.1")	
Q07	80	16	115 mm (4.5")	
Q08	100	16	145 mm (5.7")	
Q13	2"	16	82 mm (3.2")	
Q14	2½"	16	105 mm (4.1")	
Q15	3"	16	105 mm (4.1")	
Q16	4"	16	145 mm (5.7")	

Sanitary process connection to NEUMO Bio-Connect S flange connection

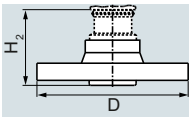

Order code	DN	PN	∅D	H_2
Q72	2"	16	125 mm (4.9")	Approx. 52 mm (2")

Threaded connection G¾", G1" and G2" acc. to DIN 3852

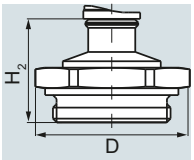

Order code	DN	PN	∅D	H_2
R01	¾"	60	37 mm (1.5")	Approx. 45 mm (1.8")
R02	1"	60	48 mm (1.9")	Approx. 47 mm (1.9")
R04	2"	60	78 mm (3.1")	Approx. 52 mm (2")

© Siemens 2020

Tank connection TG 52/50 and TG52/150

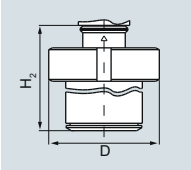

Order code	DN	PN	∅D	H_2
R10	25	40	63 mm (2.5")	Approx. 63 mm (2.5")
R11	25	40	63 mm (2.5")	Approx. 170 mm (6.7")

SMS threaded socket

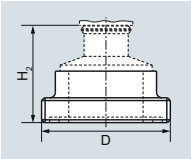

Order code	DN	PN	∅D	H_2
M73	2"	25	70 x 1/6 mm	Approx. 52 mm (2")
M74	2½"	25	85 x 1/6 mm	
M75	3"	25	98 x 1/6 mm	

Aseptic threaded socket to DIN 11864-1 Form A

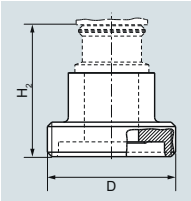

Order code	DN	PN	∅D	H_2
N33	50	25	78 x 1/6"	Approx. 52 mm (2")
N34	65	25	95 x 1/6"	
N35	80	25	110 x ¼"	
N36	100	25	130 x ¼"	

Aseptic flange with notch to DIN 11864-2 Form A

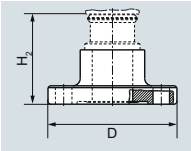

Order code	DN	PN	∅D	H_2
N43	50	16	94	Approx. 52 mm (2")
N44	65	16	113	
N45	80	16	133	
N46	100	16	159	

Aseptic flange with groove to DIN 11864-2 Form A

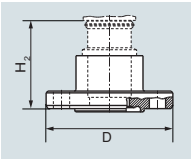

Order code	DN	PN	∅D	H_2
N43 + P11	50	16	94	Approx. 52 mm (2")
N44 + P11	65	16	113	
N45 + P11	80	16	133	
N46 + P11	100	16	159	

Aseptic clamp with groove to DIN 11864-3 Form A

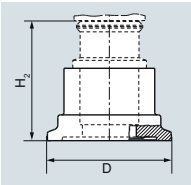

Order code	DN	PN	∅D	H_2
N53	50	25	77.5	Approx. 52 mm (2")
N54	65	25	91	
N55	80	16	106	
N56	100	16	130	

© Siemens 2020

Selection and Ordering data	Article No.
Spare parts / Accessories	
Mounting bracket and fastening parts kit made of stainless steel	**7MF8997-1AA**
Lid without window gasket not included	**7MF8997-1BA**
Lid with glass window gasket not included	**7MF8997-1BD**
NBR enclosure sealing	**7MF8997-1BG**
Measuring point label unlabeled	**7MF8997-1CA**
Cable gland	
• metal	**7MF8997-1EA**
• plastic (blue)	**7MF8997-1EB**
Weldable sockets for PMC connection	
• PMC Style Standard: Thread 1½"	**7MF4997-2HA**
• PMC Style Minibolt: front-flush 1"	**7MF4997-2HB**
Gaskets for PMC connection (packing unit = 5 units)	
• PTFE seal for PMC Style Standard: Thread 1½"	**7MF4997-2HC**
• Gasket made of Viton for PMC Style Minibolt: front-flush 1"	**7MF4997-2HD**
Weldable socket for TG 52/50 and TG 52/150 connection	
• TG 52/50 connection	**7MF4997-2HE**
• TG5 2/150 connection	**7MF4997-2HF**
Seals for TG 52/50 and TG 52/150 made of silicone	**7MF4997-2HG**
Seals for flange connection with front-flush diaphragm Material FKM (Viton); temperature range: -20 ... +200 °C (-4 ... +392 °F), 10 units	
• DN 25, PN 40 (M11)	**7MF4997-2HH**
• 1", class 150 (M40)	**7MF4997-2HK**

Selection and Ordering data	Article No.
Documentation	
The entire documentation is available for download free-of-charge in various languages at: http://www.siemens.com/processinstrumentation/documentation	
Compact operating instructions	
• English, German, Spanish, French, Italian, Dutch	**A5E03434657**
Certificates (order only via SAP) instead of Internet download	
• hard copy (to order)	**A5E03252406**
• on DVD (to order)	**A5E03252407**
HART modem	
with USB interface	**7MF4997-1DB**

Power supply units see Chap. 7 "Supplementary Components".

© Siemens 2020

SITRANS P300 - Factory-mounting of valve manifolds on transmitters

Overview

The SITRANS P300 transmitter for gauge and absolute pressure can be delivered factory-fitted with the following valve manifolds:

- 7MF9011-4EA and 7MF9011-4FA valve manifolds for gauge pressure and absolute pressure transmitters

Design

The 7MF9011-4EA valve manifolds are sealed with PTFE gaskets between the transmitter and the valve manifold as standard. Soft iron, stainless steel and copper gaskets are also available for sealing purposes if preferred.

The 7MF9011-4FA valve manifolds are sealed with PTFE sealing tape between the transmitter and the valve manifold.

The complete unit is checked for leaks under pressure after assembly (air pressure 6 bar (87 psi)) and certified with a factory certificate according to EN 10204 - 2.2.

All valve manifolds should preferably be secured with the corresponding mounting brackets. The transmitters are mounted on the valve manifold and not on the unit itself.

If you order a mounting bracket when choosing the option "Factory mounting of valve manifolds", you will receive a mounting bracket for the valve manifold instead of a bracket for mounting the transmitter.

If you order an inspection certificate 3.1 to EN 10204 after choosing the option "Factory mounting of valve manifolds", a separate certificate is provided for the transmitter and for the valve manifold.

Selection and Ordering data

7MF9011-4FA valve manifold on gauge and absolute pressure transmitters

Add **-Z** to the Article No. of the transmitter and add Order codes	Order code
SITRANS P300 7MF802.-...1.-... With process connection female thread ½-14 NPT in-sealed with PTFE sealing tape Delivery including high-pressure test certified by factory certificate according to EN 10204-2.2	**T03**
Further designs:	
Delivery includes mounting brackets and mounting clips made of stainless steel (instead of the mounting bracket supplied with the transmitter)	**A02**
Inspection certificate according to EN 10204-3.1 supplied for transmitters and mounted valve manifold	**C12**

7MF9011-4EA valve manifold on gauge and absolute pressure transmitters

Add **-Z** to the Article No. of the transmitter and add Order codes	Order code
SITRANS P300 7MF802.-...0.-... with process connection collar G½ A to EN 837-1 with gasket made of PTFE between valve manifold and transmitter	**T02**
Alternative sealing material:	
• Soft iron	**A70**
• Stainless steel, Mat. No. 14571	**A71**
• copper	**A72**
Delivery including high-pressure test certified by factory certificate according to EN 10204-2.2	
Further designs:	
Delivery includes mounting brackets and mounting clips made of stainless steel (instead of the mounting bracket supplied with the transmitter)	**A02**
Inspection certificate according to EN 10204-3.1 supplied for transmitters and mounted valve manifold	**C12**

© Siemens 2020

Dimensional drawings

Valve manifolds mounted on SITRANS P300

7MF9011-4EA valve manifold with mounted gauge pressure and absolute pressure transmitters

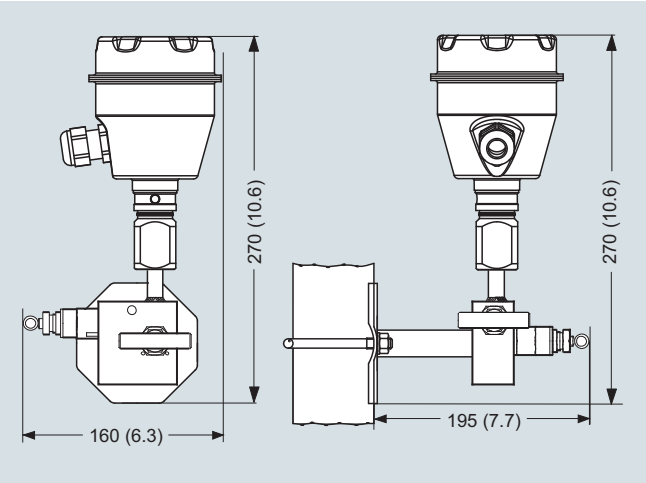

7MF9011-4EA valve manifold with mounted gauge pressure and absolute pressure transmitters, dimensions in mm (inch)

7MF9011-4FA valve manifold with mounted gauge pressure and absolute pressure transmitters

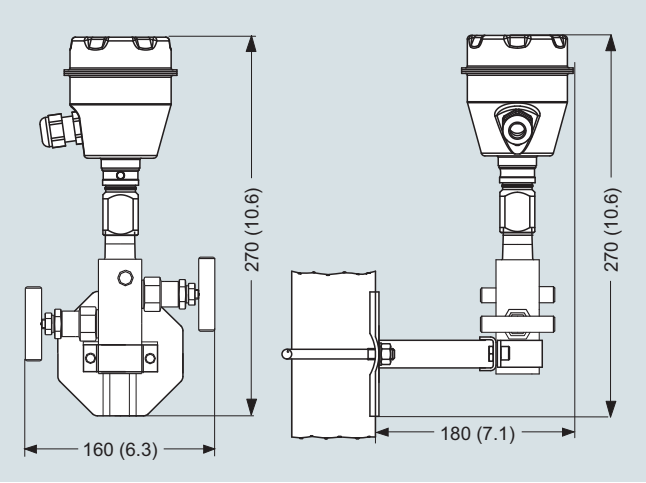

7MF9011-4FA valve manifold with mounted gauge pressure and absolute pressure transmitters, dimensions in mm (inch)

© Siemens 2020

Overview

The SITRANS P300 and DS III pressure transmitters have been fitted with special process connections for the paper industry. With the two process connection threads 1½" and 1" flush at the front, the SITRANS P300 and DS III transmitters can be used for all processes in the paper industry.

SITRANS P300 and SITRANS PDS III series pressure transmitters are digital pressure transmitters featuring extensive user-friendliness and high accuracy. The parameterization is performed using control keys via HART, PROFIBUS-PA or FOUNDATION Fieldbus interface.

Extensive functionality enables the pressure transmitter to be precisely adapted to the plant's requirements. Operation is very simple in spite of the numerous setting options.

Transmitters with type of protection "Intrinsic safety" and "Explosion-proof" may be installed within potentially explosive atmospheres (zone 1) or in zone 0. The transmitters are provided with an EC type examination certificate and comply with the corresponding harmonized European standards (ATEX).

Various versions of the pressure transmitters are available for measuring:

- Gauge pressure
- Level
- Mass level
- Volume level

Benefits

- High quality and service life
- High reliability even under extreme chemical and mechanical loads, e.g. abrasion.
- For aggressive and non-aggressive gases, vapors and liquids
- Extensive diagnosis and simulation functions
- Minimum conformity error
- Small long-term drift
- Wetted parts made of Hastelloy
- Infinitely adjustable measuring spans from 0.03 bar to 16 bar (0.43 psi to 232 psi) for DS III with HART interface
- Nominal measuring range from 1 bar to 16 bar (14.5 psi to 232 psi) for DS III with PROFIBUS PA and FOUNDATION Fieldbus interface
- Infinitely adjustable measuring spans from 0.03 bar to 16 bar (0.43 psi to 232 psi) for SITRANS P300 with HART interface
- Nominal measuring range from 1 bar to 16 bar (14.5 psi to 232 psi) for SITRANS P300 with PROFIBUS PA interface
- High measuring accuracy
- Parameterization over control keys and HART Communication, or over PROFIBUS PA or FOUNDATION Fieldbus interface (DS III only).

Application

The pressure transmitters of the DS III series, can be used in industrial areas with extreme chemical and mechanical loads. Electromagnetic compatibility in the range 10 kHz to 1 GHz makes the DS III pressure transmitters suitable for locations with high electromagnetic emissions.

Pressure transmitters with type of protection "Intrinsic safety" and "Explosion-proof" may be installed within potentially explosive atmospheres (zone 1) or in zone 0. The pressure transmitters are provided with an EC type examination certificate and comply with the corresponding harmonized European standards (ATEX).

Pressure transmitters with the type of protection "Intrinsic safety" for use in zone 0 may be operated with power supply units of category "ia" and "ib".

The transmitters can be equipped with various designs of remote seals for special applications such as the measurement of highly viscous substances.

The pressure transmitter can be operated locally over 3 control keys or programmed externally over HART or over PROFIBUS-PA or FOUNDATION Fieldbus interface (only DS III).

SITRANS P, DS III series

Measured variable: Gauge pressure of aggressive and non-aggressive gases, vapors and liquids.

Measuring span (infinitely adjustable)

For DS III with HART: 0.03 ... 16 bar (0.433 ... 232 psi)

Nominal measuring range

For DS III with PROFIBUS PA or FOUNDATION Fieldbus:
1 ... 16 bar (14.5 ... 232 psi)

SITRANS P300

Measuring span (infinitely adjustable)

For DS III with HART: 0.03 ... 16 bar (0.433 ... 232 psi)

Nominal measuring range

For DS III with PROFIBUS PA or FOUNDATION Fieldbus:
1 ... 16 bar (14.5 ... 232 psi)

© Siemens 2020

Design

SITRANS P DS III

Device front view, SITRANS P DS III

The transmitter consists of various components depending on the order. The possible versions are listed in the ordering information. The components described below are the same for all transmitters.

The rating plate (7, Figure "Device front view) with the Article No. is located on the side of the enclosure. The specified number together with the ordering information provide details on the optional design details and on the possible measuring range (physical properties of built-in sensor element).

The approval label is located on the opposite side.

The enclosure is made of die-cast aluminium or stainless steel precision casting. A round cover is screwed on at the front and rear of the enclosure. The front cover (2) can be fitted with a viewing pane so that the measured values can be read directly on the display. The inlet (8) for the electrical connection is located either on the left or right side. The unused opening on the opposite side is sealed by a blanking plug. The protective earth connection is located on the rear of the enclosure.

The electrical connections for the power supply and screen are accessible by unscrewing the rear cover. The bottom part of the enclosure contains the measuring cell with process connection (5). The measuring cell is prevented from rotating by a locking screw (4). As the result of this modular design, the measuring cell and the electronics can be replaced separately from each other. The set parameter data are retained.

At the top of the enclosure is a plastic cover (1), which hides the input keys.

Example for an attached measuring point label

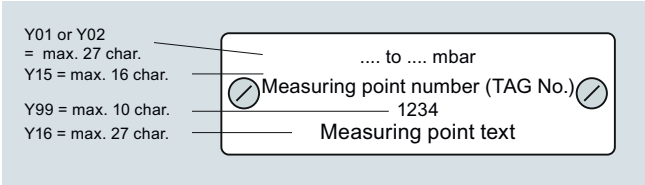

SITRANS P300

The device comprises:

- Electronics
- Enclosure
- Measuring cell

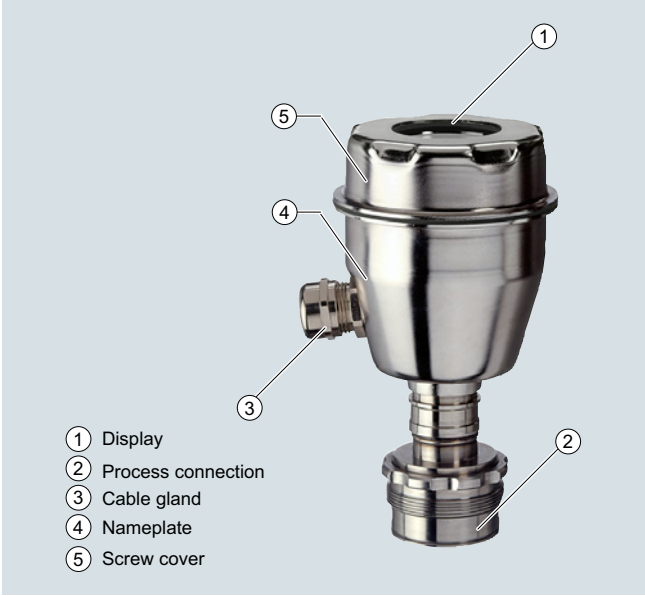

Perspective view of the SITRANS P300

The enclosure has a screw-on lid (5) and, depending on the version, is with or without an inspection window. The electrical terminal enclosure, the buttons for operation of the device are located under this lid and, depending on the version, the display. The connections for the auxiliary power UH and the shield are in the terminal enclosure. The cable gland is on the side of the enclosure. The measuring cell with the process connection (2) is located on the bottom of the enclosure. The measuring cell with the process connection may differ from the one shown in the diagram, depending on the device version.

© Siemens 2020

Function

Operation of electronics with HART communication

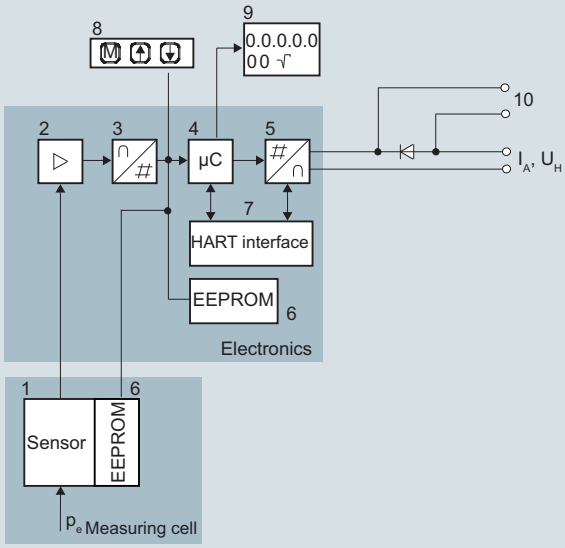

1 Measuring cell sensor
2 Instrument amplifier
3 Analog-to-digital converter
4 Microcontroller
5 Digital-to-analog converter
6 One non-volatile memory each in the measuring cell and electronics
7 HART interface
8 Three input keys (local operation)
9 Digital display
10 Diode circuit and connection for external ammeter
I_A Output current
U_H Power supply
P_e Input variable

Function diagram of electronics

The bridge output voltage created by the sensor (1, Figure "Function diagram of electronics") is amplified by the measuring amplifier (2) and digitized in the analog-to-digital converter (3). The digital information is evaluated in a microcontroller, its linearity and temperature response corrected, and converted in a digital-to-analog converter (5) into an output current of 4 to 20 mA.

The diode circuit (10) protects against incorrect polarity.

The data specific to the measuring cell, the electronics data, and the parameter data are stored in the two non-volatile memories (6). The one memory is coupled to the measuring cell, the other to the electronics. As the result of this modular design, the electronics and the measuring cell can be replaced separately from each other.

Using the 3 input keys (8) you can parameterize the pressure transmitter directly at the measuring point. The input buttons can also be used to control the view of the results, the error messages and the operating modes on the display (9).

The HART modem (7) permits parameterization using a protocol according to the HART specification.

The pressure transmitters with measuring measuring spans ≤ 63 bar (914 psi) measure the input pressure compared to atmosphere, the transmitters with measuring measuring spans 160 bar (2320 psi) measure compared to vacuum.

Operation of electronics with PROFIBUS PA communication

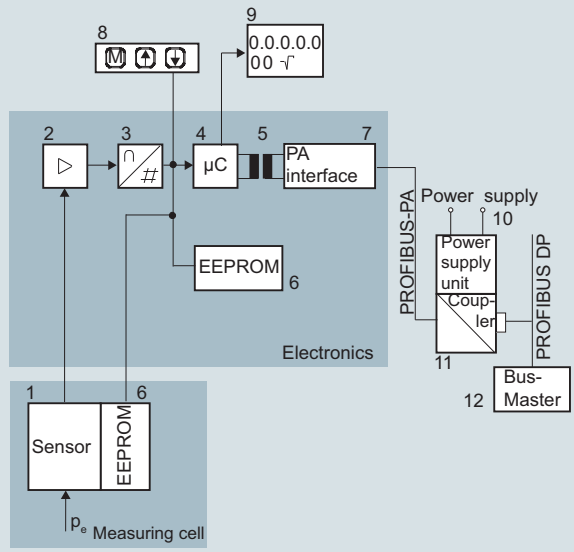

1 Measuring cell sensor
2 Instrument amplifier
3 Analog-to-digital converter
4 Microcontroller
5 Electrical isolation
6 One non-volatile memory each in the measuring cell and electronics
7 PROFIBUS-PA interface
8 Three input keys (local operation)
9 Digital display
10 Power supply
11 DP/PA coupler or link
12 Bus master
p_e Input variable

Function diagram of electronics

The bridge output voltage created by the sensor (1, Figure "Function diagram of electronics") is amplified by the measuring amplifier(2) and digitized in the analog-to-digital converter (3). The digital information is evaluated in the microcontroller, its linearity and temperature response corrected, and provided on the PROFIBUS PA through an electrically isolated PA interface (7).

The data specific to the measuring cell, the electronics data, and the parameter data are stored in the two non-volatile memories (6). The first memory is linked with the measuring cell, the second with the electronics. This modular design means that the electronics and the measuring cell can be replaced separately from one another.

Using the three input buttons (8) you can parameterize the pressure transmitter directly at the measuring point. The input buttons can also be used to control the view of the results, the error messages and the operating modes on the display (9).

The results with status values and diagnostic values are transferred by cyclic data transmission on the PROFIBUS PA. Parameterization data and error messages are transferred by acyclic data transmission. Special software such as SIMATIC PDM is required for this.

© Siemens 2020

Operation of electronics with FOUNDATION Fieldbus communication

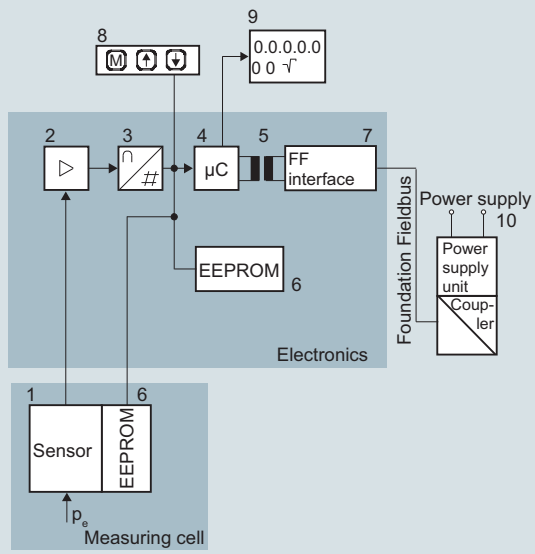

1	Measuring cell sensor	8	Three input keys (local operation)
2	Instrument amplifier	9	Digital display
3	Analog-to-digital converter	10	Power supply
4	Microcontroller		
5	Electrical isolation		
6	One non-volatile memory each in the measuring cell and electronics	p_e	Input variable
7	FF interface		

Function diagram of electronics

The bridge output voltage created by the sensor (1, Figure "Function diagram of electronics") is amplified by the measuring amplifier (2) and digitized in the analog-to-digital converter (3). The digital information is evaluated in the microcontroller, its linearity and temperature response corrected, and provided on the FOUNDATION Fieldbus through an electrically isolated FOUNDATION Fieldbus interface (7).

The data specific to the measuring cell, the electronics data, and the parameter data are stored in the two non-volatile memories (6). The one memory is coupled to the measuring cell, the other to the electronics. As the result of this modular design, the electronics and the measuring cell can be replaced separately from each other.

Using the three input buttons (8) you can parameterize the pressure transmitter directly at the measuring point. The input buttons can also be used to control the view of the results, the error messages and the operating modes on the display (9).

The results with status values and diagnostic values are transferred by cyclic data transmission on the FOUNDATION Fieldbus. Parameterization data and error messages are transferred by acyclic data transmission. Special software such as National Instruments Configurator is required for this.

Mode of operation of the measuring cell

Measuring cell for gauge pressure with front-flush diaphragm

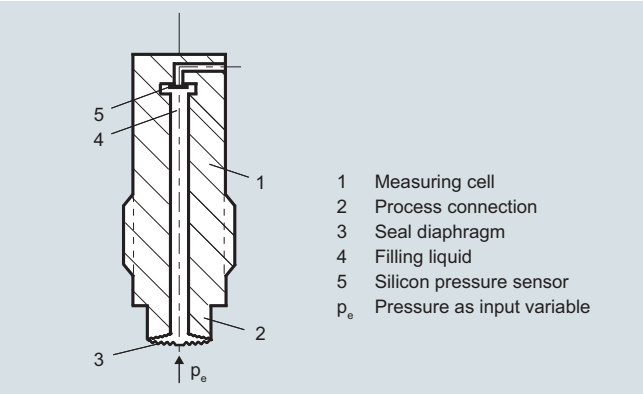

Measuring cell for gauge pressure, with front-flush diaphragm for paper industry, function diagram

The pressure p_e is applied through the process connection (2, Figure "Measuring cell for gauge pressure, with front-flush diaphragm for paper industry, function diagram) to the measuring cell (1). This pressure is subsequently transmitted further through the seal diaphragm (3) and the filling liquid (4) to the silicon pressure sensor (5) whose measuring diaphragm is then flexed. This changes the resistance of the four piezo-resistors fitted in the diaphragm in a bridge circuit. This change in resistance results in a bridge output voltage proportional to the absolute pressure.

Parameterization

Depending on the version, there are a range of options for parameterizing the pressure transmitter and for setting or scanning the parameters.

Parameterization using the input buttons (local operation)

With the input buttons you can easily set the most important parameters without any additional equipment.

Parameterization using HART

Parameterization using HART is performed with a HART Communicator or a PC.

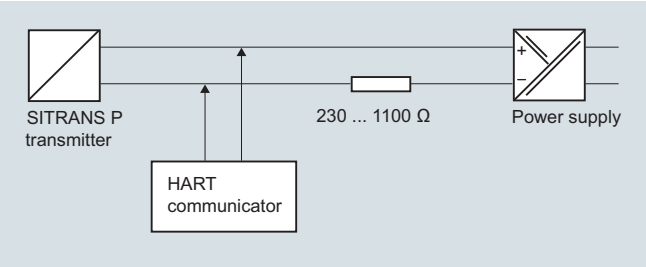

Communication between a HART Communicator and a pressure transmitter

When parameterizing with the HART Communicator, the connection is made directly to the 2-wire cable.

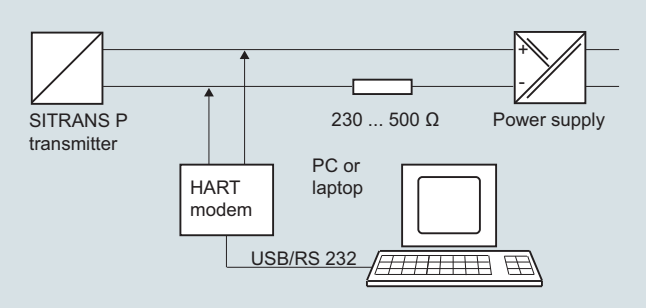

HART communication between a PC communicator and a pressure transmitter

© Siemens 2020

When parameterizing with a PC, the connection is made through a HART modem.

The signals needed for communication in conformity with the HART 5.x or 6.x protocols are superimposed on the output current using the Frequency Shift Keying (FSK) method.

Adjustable parameter DS III with HART and P300 with HART

Parameters	Input keys	HART communication
Lower range value	x	x
Upper range value	x	x
Electrical damping	x	x
Lower range value without application of a pressure ("Blind setting")	x	x
Upper range value without application of a pressure ("Blind setting")	x	x
Zero adjustment	x	x
current transmitter	x	x
Fault current	x	x
Disabling of buttons, write protection	x	x[1)]
Type of dimension and actual dimension	x	x
Characteristic (linear)	x	x
Input of characteristic		x
Freely-programmable LCD		x
Diagnostic functions		x

[1)] Cancel apart from write protection

Diagnostic functions for DS III with HART and P300 with HART

- Zero correction display
- Event counter
- Limit transmitter
- Saturation alarm
- Slave pointer
- Simulation functions
- Maintenance timer

Available physical units of display for DS III with HART and P300 with HART

Physical variable	Physical dimensions
Pressure (setting can also be made in the factory)	Pa, MPa, kPa, bar, mbar, torr, atm, psi, g/cm^2, kg/cm^2, inH$_2$O, inH$_2$O (4 °C), mmH$_2$O, ftH$_2$O (20 °C), inHg, mmHg
Level (height data)	m, cm, mm, ft, in
Volume	m^3, dm^3, hl, yd^3, ft^3, in^3, US gallon, Imp. gallon, bushel, barrel, barrel liquid
Mass	g, kg, t, lb, Ston, Lton, oz
Temperature	K, °C, °F, °R
Miscellaneous	%, mA

Parameterization through PROFIBUS PA interface

Fully digital communication through PROFIBUS PA, profile 3.0, is particularly user-friendly. The PROFIBUS connects the DS III PA to a process control system, e.g. SIMATIC PSC 7. Communication is possible even in a potentially explosive environment.

For parameterization through PROFIBUS you need suitable software, e.g. SIMATIC PDM (Process Device Manager).

Parameterization through FOUNDATION Fieldbus interface

Fully digital communication through FOUNDATION Fieldbus is particularly user-friendly. Through the FOUNDATION Fieldbus the DS III with FOUNDATION Fieldbus is connected to a process control system. Communication is possible even in a potentially explosive environment.

For parameterization through the FOUNDATION Fieldbus you need suitable software, e.g. National Instruments Configurator.

Adjustable parameters for DS III with PROFIBUS PA and FOUNDATION Fieldbus, and P300 with PROFIBUS PA and FOUNDATION Fieldbus

Adjustable parameters	Input keys	PROFIBUS PA and FOUNDATION Fieldbus interface
Electrical damping	x	x
Zero adjustment (correction of position)	x	x
Buttons and/or function disabling	x	x
Source of measured-value display	x	x
Physical dimension of display	x	x
Position of decimal point	x	x
Bus address	x	x
Adjustment of characteristic	x	x
Input of characteristic		x
Freely-programmable LCD		x
Diagnostic functions		x

Diagnostic functions for DS III with PROFIBUS PA and FOUNDATION Fieldbus, and P300 with PROFIBUS PA and FOUNDATION Fieldbus

- Event counter
- Slave pointer
- Maintenance timer
- Simulation functions
- Display of zero correction
- Limit transmitter
- Saturation alarm

Physical dimensions available for the display

Physical variable	Physical dimensions
Pressure (setting can also be made in the factory)	MPa, hPa, kPa, Pa, bar, mbar, torr, atm, psi, g/cm^2, kg/cm^2, mmH$_2$O, mmH$_2$O (4 °C), inH$_2$O, inH$_2$0 (4 °C), ftH$_2$O, mmHg, inHg
Level (height data)	m, cm, mm, ft, in, yd
Mass	g, kg, t, lb, Ston, Lton, oz
Volume	m^3, dm^3, hl, yd^3, ft^3, in^3, US gallon, Imp. gallon, bushel, barrel, barrel liquid
Temperature	K, °C, °F, °R
Miscellaneous	%

© Siemens 2020

Technical specifications

SITRANS P, DS III series for gauge pressure with PMC connection for the paper industry

Input				
Measured variable	Gauge pressure			
Measuring span (infinitely adjustable) or nominal measuring range, max. operating pressure and max. test pressure	**HART**	**PROFIBUS PA/ FOUNDATION Fieldbus**		
	Measuring span	Nominal measuring range	Max. operating pressure MAWP (PS)	Max. perm. test pressure
	0.01 ... 1 bar 1 ... 100 kPa 0.15 ... 14.5 psi	1 bar 100 kPa 14.5 psi	4 bar 400 kPa 58 psi	6 bar 600 kPa 87 psi
	0.04 ... 4 bar 4 ... 400 kPa 0.58 ... 58 psi	4 bar 400 kPa 58 psi	7 bar 0.7 MPa 102 psi	10 bar 1 MPa 145 psi
	0.16 ... 16 bar 16 ... 1600 kPa 2.3 ... 232 psi	16 bar 1600 kPa 232 psi	21 bar 2.1 MPa 305 psi	32 bar 3.2 MPa 464 psi
Lower measuring limit (For PMC-Style Minibolt no measuring span < 500 mbar adjustable)	100 mbar a/10 kPa a/1.45 psi a			
Upper measuring limit	100% of max. measuring span			

Output	**HART**	**PROFIBUS PA/ FOUNDATION Fieldbus**
Output signal	4 ... 20 mA	Digital PROFIBUS PA and FOUNDATION Fieldbus signal
• Lower limit (infinitely adjustable)	3.55 mA, factory preset to 3.84 mA	-
• Upper limit (infinitely adjustable)	23 mA, factory preset to 20.5 mA or optionally set to 22.0 mA	-
Load		
• Without HART communication	$R_B \leq (U_H - 10.5\ V)/0.023\ A$ in Ω, U_H: Power supply in V	-
• With HART communication	R_B = 230 ... 500 Ω (SIMATIC PDM) or R_B = 230 ... 1100 Ω (HART-Communicator)	-
Physical bus	-	IEC 61158-2
Protection against polarity reversal	Protected against short-circuit and polarity reversal. Each connection against the other with max. supply voltage.	
Electrical damping (step width 0.1 s)	Set to 2 s (0 ... 100 s)	

Measuring accuracy	Acc. to IEC 60770-1
Reference conditions (All error data refer always refer to the set span)	• Increasing characteristic • Lower range value 0 bar/kPa/psi • Stainless steel seal diaphragm • Silicone oil filling • Room temperature 25 °C (77 °F)
Measuring span ratio r (spread, Turn-Down)	r = max. measuring span/set measuring span or nom. pressure range
Error in measurement at limit setting incl. hysteresis and reproducibility	
• Linear characteristic	
- $r \leq 5$	≤ 0.075 %
- $5 < r \leq 100$	≤ (0.005 · r + 0.05) %
Influence of ambient temperature (in percent per 28 °C (50 °F))	≤ (0.08 · r + 0.16) %
Long-term stability (temperature change ± 30 °C (± 54 °F))	≤ (0.25 · r) % in 5 years
Effect of mounting position	≤ 0.1 mbar/0.01 kPa/0.00145 psi per 10° inclination (zero point correction is possible with position error compensation)
Effect of auxiliary power supply (in percent per change in voltage)	0.005 % per 1 V
Measuring value resolution for PROFIBUS PA and FOUNDATION Fieldbus	$3 \cdot 10^{-5}$ of nominal measuring range

© Siemens 2020

SITRANS P, DS III series for gauge pressure with PMC connection for the paper industry	HART	PROFIBUS PA and FOUNDATION Fieldbus
Operating conditions		
Degree of protection		
• according to EN 60529	IP66 (optional IP66/IP68)	
• according to NEMA 250	Type 4X	
Temperature of medium	-40 ... +100 °C (-40 ... +212 °F)	
Ambient conditions		
• Ambient temperature	-20 ... +85 °C (-4 ... +185 °F)	
- Transmitter	-40 ... +85 °C (-40 ... +185 °F)	
• Storage temperature	-50 ... +85 °C (-58 ... +185 °F)	
• Climatic class		
- Condensation	Relative humidity 0 ... 100 % Condensation permissible, suitable for use in the tropics	
• Electromagnetic Compatibility		
- Emitted interference and interference immunity	Acc. to IEC 61326 and NAMUR NE 21	
Design		
Weight (without options)	≈ 1.5 kg (≈ 3.3 lb)	
Enclosure material	Low-copper die-cast aluminum, GD-AlSi12 or stainless steel precision casting, mat. no. 1.4408	
Wetted parts materials		
• Gasket (standard)	PTFE flat gasket	
• O-ring (minibolt)	FPM (Viton) or optionally: FFPM or NBR	
Measuring cell filling	Silicone oil or inert filling liquid	
Process connection (standard)	Flush-mounted, 1½", PMC Standard design	
Process connection (minibolt)	Flush-mounted, 1", minibolt design	
Power supply U_H		
Terminal voltage on transmitter	10.5 ... 45 V DC 10.5 ... 30 V DC in intrinsically-safe mode	-
Power supply	-	Supplied through bus
Separate supply voltage	-	Not necessary
Bus voltage		
• Not Ex	-	9 ... 32 V
• With intrinsically-safe operation	-	9 ... 24 V
Current consumption		
• Basic current (max.)	-	12.5 mA
• Start-up current ≤ basic current	-	Yes
• Max. current in event of fault	-	15.5 mA
Fault disconnection electronics (FDE) available	-	Yes
Certificates and approvals		
Classification according to PED 2014/68/EU	For gases of fluid group 1 and liquids of fluid group 1; complies with requirements of article 4, paragraph 3 (sound engineering practice)	

© Siemens 2020

HART communication	
HART communication	230 ... 1100 Ω
Protocol	HART Version 5.x
Software for computer	SIMATIC PDM
PROFIBUS PA communication	
Simultaneous communication with master class 2 (max.)	4
The address can be set using	Configuration tool or local operation (standard setting address 126)
Cyclic data usage	
• Output byte	5 (one measured value) or 10 (two measured values)
• Input byte	0, 1, or 2 (register operating mode and reset function for metering)
Internal preprocessing	
Device profile	PROFIBUS PA Profile for Process Control Devices Version 3.0, class B
Function blocks	2
• Analog input	
- Adaptation to customer-specific process variables	Yes, linearly rising or falling characteristic
- Electrical damping, adjustable	0 ... 100 s
- Simulation function	Input /Output
- Failure mode	parameterizable (last good value, substitute value, incorrect value)
- Limit monitoring	Yes, one upper and lower warning limit and one alarm limit respectively
• Register (totalizer)	Can be reset, preset, optional direction of counting, simulation function of register output
- Failure mode	parameterizable (summation with last good value, continuous summation, summation with incorrect value)
- Limit monitoring	One upper and lower warning limit and one alarm limit respectively
• Physical block	1
Transducer blocks	2
• Pressure transducer block	
- Can be calibrated by applying two pressures	Yes
- Monitoring of sensor limits	Yes
- Specification of a container characteristic with	Max. 30 nodes
- Square-rooted characteristic for flow measurement	Yes
- Gradual volume suppression and implementation point of square-root extraction	Parameterizable
- Simulation function for measured pressure value and sensor temperature	Constant value or over parameterizable ramp function

FOUNDATION Fieldbus communication	
Function blocks	3 function blocks analog input, 1 function block PID
• Analog input	
- Adaptation to customer-specific process variables	Yes, linearly rising or falling characteristic
- Electrical damping, adjustable	0 ... 100 s
- Simulation function	Output/input (can be locked within the device with a bridge)
- Failure mode	parameterizable (last good value, substitute value, incorrect value)
- Limit monitoring	Yes, one upper and lower warning limit and one alarm limit respectively
- Square-rooted characteristic for flow measurement	Yes
• PID	Standard FOUNDATION Fieldbus function block
• Physical block	1 resource block
Transducer blocks	1 transducer block Pressure with calibration, 1 transducer block LCD
• Pressure transducer block	
- Can be calibrated by applying two pressures	Yes
- Monitoring of sensor limits	Yes
- Simulation function: Measured pressure value, sensor temperature and electronics temperature	Constant value or over parameterizable ramp function

© Siemens 2020

Selection and Ordering data — Article No.

SITRANS P pressure transmitters for gauge pressure, with PMC connection series DS III with HART ↗ 7MF4133-

↗ Click on the Article No. for the online configuration in the PIA Life Cycle Portal.

Measuring cell filling	**Measuring cell-cleaning**	
Silicone oil	normal	1
Inert liquid	grease-free to cleanliness level 2	3
Measuring span (min. ... max.)		
0.01 ... 1 bar[1]	(0.15 ... 14.5 psi)[1]	B
0.04 ... 4 bar	(0.58 ... 58 psi)	C
0.1.6 ... 16 bar	(2.32 ... 232 psi)	D
Wetted parts materials		
Seal diaphragm	Connection shank	
Hastelloy	Stainless steel	B
Process connection		
• PMC Style Standard: Thread 1½"		2
• PMC Style Minibolt: front-flush 1" (not with minimum measuring span: 500 mbar (7.25 psi) - version "B")		3
Non-wetted parts materials		
• Enclosure made of die-cast aluminium		0
• Enclosure stainless steel precision casting		3
Version		
• Standard version, German plate inscription, setting for pressure unit: bar		1
• International version, English plate inscription, setting for pressure unit: bar		2
• Chinese version, English plate inscription, setting for pressure unit: Pascal		3
All versions include DVD with compact operating instructions in various EU languages.		
Explosion protection		
• None		A
• With ATEX, Type of protection:		
- "Intrinsic safety (Ex ia)"		B
- "Explosion-proof (Ex d)" [2]		D
- „Ex nA/ic (Zone 2)"[3]		E
• FM + CSA intrinsic safe (is)[4]		F
• With FM + CSA, Type of protection:		
- "Intrinsic Safe and Explosion Proof (is + xp)"[3][4]		N C
Electrical connection / cable entry		
• Female thread M20 x 1.5		B
• Female thread ½-14 NPT		C
• Device plugs M12 (stainless steel)[5] [6]		F
Display		
• Without display		0
• Without visible display (display concealed, setting: mA)		1
• With visible display (setting: mA)		6
• With customer-specific display (setting as specified, Order code "Y21" required)		7

Power supply units see Chap. 7 "Supplementary Components".

Included in delivery of the device:
- Quick-start guide
- Sealing ring

1) Only with "PMC Style Standard" process connection
2) Without cable gland, with blanking plug
3) Configurations with device plugs M12 are only available in Ex ic.
4) Explosion protection acc. to FM/CSA: suitable for installations according to NEC 500/505.
5) Only in connection with Ex approval A, B, E or F.
6) M12 delivered without cable socket

Selection and Ordering data — Article No.

SITRANS P pressure transmitter for gauge pressure, with PMC connection

DS III with PROFIBUS PA (PA) ↗ 7MF4134-

DS III with FOUNDATION Fieldbus (FF) ↗ 7MF4135-

↗ Click on the Article No. for the online configuration in the PIA Life Cycle Portal.

Measuring cell filling	**Meas. cell cleaning**	
Silicone oil	normal	1
Inert liquid	grease-free to cleanliness level 2	3
Nominal measuring range		
1 bar[1]	(14.5 psi)[1]	B
4 bar	(58 psi)	C
16 bar	(232 psi)	D
Wetted parts materials		
Seal diaphragm	Connection shank	
Hastelloy	Stainless steel	B
Process connection[2]		
• PMC Style Standard: Thread 1½"		2
• PMC Style Minibolt: front-flush 1" (minimum measuring span: 500 mbar (7.25 psi), not available with 1-bar-measuring cell (Option B))		3
Non-wetted parts materials		
• Enclosure made of die-cast aluminium		0
• Enclosure stainless steel precision casting		3
Version		
• Standard version, German plate inscription, setting for pressure unit: bar		1
• International version, English plate inscription, setting for pressure unit: bar		2
• Chinese version, English plate inscription, setting for pressure unit: Pascal		3
All versions include DVD with compact operating instructions in various EU languages.		
Explosion protection		
• None		A
• With ATEX, Type of protection:		
- "Intrinsic safety (Ex ia)"		B
- "Explosion-proof (Ex d)" [3]		D
- „Ex nA/ic (Zone 2)"[4]		E
• FM + CSA intrinsic safe (is)[5]		F
• With FM + CSA, Type of protection:		
- "Intrinsic Safe and Explosion Proof (is + xp)"[3][5]		N C
Electrical connection / cable entry		
• Female thread M20 x 1.5		B
• Female thread ½-14 NPT		C
• Device plugs M12 (stainless steel)[6] [7]		F
Display		
• Without display		0
• Without visible display (display concealed, setting: bar)		1
• With visible display (setting: bar)		6
• With customer-specific display (setting as specified, Order code "Y21" required)		7

Included in delivery of the device:
- Quick-start guide
- Sealing ring

1) Only with "PMC Style Standard"process connection
2) Sealing is included in delivery.
3) Without cable gland, with blanking plug
4) Configurations with device plugs M12 are only available in Ex ic.
5) Explosion protection acc. to FM/CSA: suitable for installations according to NEC 500/505
6) Only in connection with Ex approval A, B, E or F.
7) M12 delivered without cable socket

© Siemens 2020

Selection and Ordering data	Order code	HART	PA	FF
Further designs				
Add "**-Z**" to Article No. and specify Order code.				
Device plugs				
• Angled	**A32**	✓		
• Han 8D (metal, gray)	**A33**	✓		
M12 cable sockets (metal (CuZn))	**A50**	✓	✓	✓
Rating plate inscription (instead of German)				
• English	**B11**	✓	✓	✓
• French	**B12**	✓	✓	✓
• Spanish	**B13**	✓	✓	✓
• Italian	**B14**	✓	✓	✓
• Cyrillic (russian)	**B16**	✓	✓	✓
English rating plate Pressure units in in$H_2$0 and/or psi	**B21**	✓	✓	✓
Quality test certificate, 5-point factory calibration (IEC 60770-2)	**C11**	✓	✓	✓
Inspection certificate Acc. to EN 10204-3.1	**C12**	✓	✓	✓
Factory certificate Acc. to EN 10204-2.2	**C14**	✓	✓	✓
"Functional safety (SIL2)" certificate acc. to IEC 61508	**C20**	✓		
"Functional safety (SIL2/3)" certificate acc. to IEC 61508	**C23**	✓		
PED for Russia with initial calibration mark	**C99**	✓	✓	✓
Setting of the upper saturation limit of the output signal to 22.0 mA	**D05**	✓	✓	✓
Degree of protection IP66/IP68 (only for M20 x 1.5 and ½-14 NPT)	**D12**	✓	✓	✓
Export approval Korea	**E11**	✓	✓	✓
Explosion-proof "Intrinsic safety" to NEPSI (China) (only for transmitter 7MF4...-.....-.B..)	**E55**[1]	✓	✓	✓
Explosion protection "Explosion-proof" to NEPSI (China) (only for transmitter 7MF4...-.....-.D..)	**E56**[1]	✓	✓	✓
Ex protection "Zone 2" to NEPSI (China) (only for transmitter 7MF4...-.....-.E..)	**E57**[1]	✓	✓	✓
Ex protection „Ex ia", „Ex d" and „Zone 2" to NEPSI (China) (only for transmitter 7MF4...-.....-.R..)	**E58**[1]	✓	✓	✓
Mounting				
• Weldable sockets for standard 1½" threaded connection	**P01**	✓	✓	✓
• Weldable socket for minibolt connection 1" (incl. screw 5/16-18 UNC-2B and washer)	**P02**	✓	✓	✓

[1] When the additional ex option is selected, the ATEX marking on the device is omitted. Only the Ex option selected via the Z option is marked.

Selection and Ordering data	Order code	HART	PA	FF
Additional data				
Please add "**-Z**" to Article No. and specify Order code(s) and plain text.				
Measuring range to be set Specify in plain text (max. 5 characters): Y01: ... up to ... mbar, bar, kPa, MPa, psi	**Y01**	✓	✓[1]	
Stainless steel tag plate and entry in device variable (measuring point description) Max. 16 characters, specify in plain text: Y15:	**Y15**	✓	✓	✓
Measuring point text (entry in device variable) Max. 27 characters, specify in plain text: Y16:	**Y16**	✓	✓	✓
Entry of HART address (TAG) Max. 8 characters, specify in plain text: Y17:	**Y17**	✓		
Setting of pressure indication in pressure units Specify in plain text (standard setting: bar): Y21: mbar, bar, kPa, MPa, psi, ... Note: The following pressure units can be selected: bar, mbar, mm H_2O*), inH_2O*), ftH_2O*), mmHG, inHG, psi, Pa, kPa, MPa, g/cm^2, kg/cm^2, Torr, ATM or % *) ref. temperature 20 °C	**Y21**	✓	✓	✓
Setting of pressure indication in non-pressure units[2] Specify in plain text: Y22: ..... up to ..... l, m^3, m, USg, ... (specification of measuring range in pressure units **"Y01"** is essential, unit with max. 5 characters)	**Y22 + Y01**	✓		
Preset bus address possible between 1 and 126 Max. 8 characters, specify in plain text: Y25:	**Y25**		✓	✓

Only "Y01" and "Y21" can be factory preset

✓ = available

ordering example

Item line:	7MF4133-1DB20-1AB7-Z
B line:	C11 + Y01 + Y21
C line:	Y01: 1 ... 10 bar (14.5 ... 145 psi)
C line:	Y21: bar (psi)

[1] Measuring accuracies for PROFIBUS PA transmitters with Option Y01 are calculated in the same way as for HART devices.

[2] Preset values can only be changed over SIMATIC PDM.

© Siemens 2020

Dimensional drawings

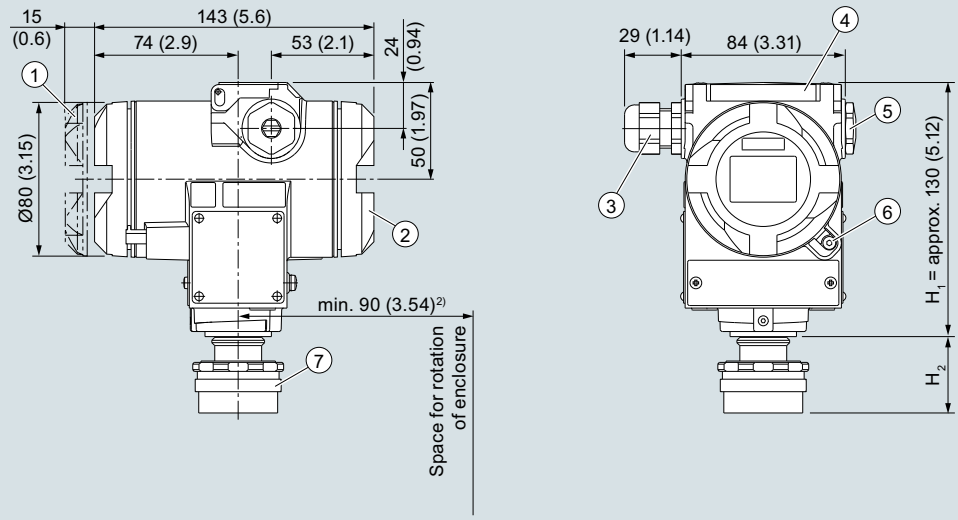

1. Electronics side, local display (longer overall length for cover with inspection window)[1]
2. Connection side[1]
3. Electrical connection:
   - M20 x 1,5 screw gland
   - ½-14 NPT screw gland
   - M12 device plug
4. Cover over buttons
5. Blanking plug
6. Safety catch (only for "flameproof enclosure" type of protection; not shown in the drawing)
7. Process connection: PMC standard

[1] In addition, allow approx. 20 mm (0.79 inch) for the thread length
[2] 92 mm (3.62 inch) minimum distance for rotating with indicator

SITRANS P DS III pressure transmitters for gauge pressure, with PMC connection, dimensions in mm (inch)

The diagram shows a SITRANS P DS III with an example of a flange. In this drawing the height is subdivided into H_1 and H_2.

H_1 = Height of the SITRANS P DS III up to a defined cross-section

H_2 = Height of the flange up to this defined cross-section

Only the height H_2 is indicated in the dimensions of the flanges.

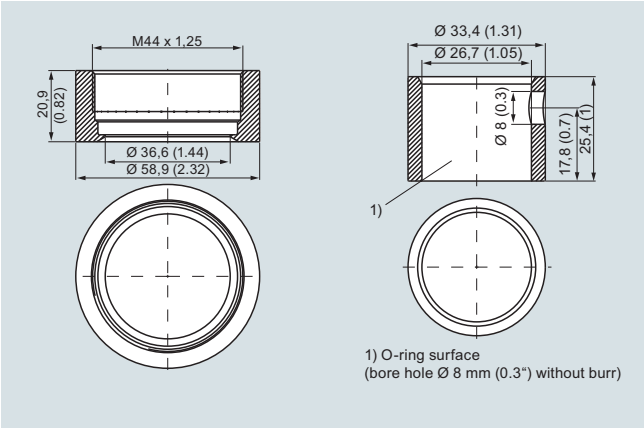

PMC Style Standard (left) and PMC Style Minibolt (right) weldable sockets, dimensions in mm (inch)

Material: Stainless steel, Mat. No. 1.4404/316L

PMC Style standard

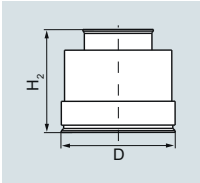

DN	PN	∅D	H_2
		40.9 mm (1.6")	approx. 36.8 mm (1.4")

PMC Style minibolt

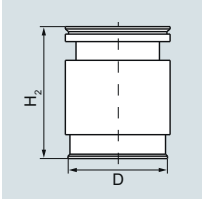

DN	PN	∅D	H_2
		26.3 mm (1.0")	approx. 33.1 mm (1.3")

© Siemens 2020

Technical specifications

SITRANS P300 for gauge pressure with PMC connection for the paper industry

Input				
Measured variable	Gauge pressure (front-flush)			
Measuring span (infinitely adjustable) or nominal measuring range and max. permissible test pressuree	**HART**	**PROFIBUS PA/ FOUNDATION Fieldbus**		
	Measuring span	Nominal measuring range	Max. operating pressure MAWP (PS)	Max. perm. test pressure
	0.01 ... 1 bar 1 ... 100 kPa 0.15 ... 14.5 psi	1 bar 100 kPa 14.5 psi	4 bar 400 kPa 58 psi	6 bar 600 kPa 87 psi
	0.04 ... 4 bar 4 ... 400 kPa 0.58 ... 58 psi	4 bar 400 kPa 58 psi	7 bar 0.7 MPa 102 psi	10 bar 1 MPa 145 psi
	0.16 ... 16 bar 16 ... 1600 kPa 2.3 ... 232 psi	16 bar 1600 kPa 232 psi	21 bar 2.1 MPa 305 psi	32 bar 3.2 MPa 464 psi
Lower measuring limit (For PMC-Style Minibolt no measuring span < 500 mbar adjustable)	100 mbar a/10 kPa a/1.45 psi a			
Upper measuring limit	100 % of max. measuring span			

Output	**HART**	**PROFIBUS PA/ FOUNDATION Fieldbus**
Output signal	4 ... 20 mA	Digital PROFIBUS PA and FOUNDATION Fieldbus signal
• Lower limit (infinitely adjustable)	3.55 mA, factory preset to 3.84 mA	-
• Upper limit (infinitely adjustable)	23 mA, factory preset to 20.5 mA or optionally set to 22.0 mA	-
Load		
• Without HART communication	$R_B \leq (U_H - 10.5\ V)/0.023\ A$ in Ω, U_H: Power supply in V	-
• With HART communication	R_B = 230 ... 500 Ω (SIMATIC PDM) or R_B = 230 ... 1100 Ω (HART Communicator)	-
Physical bus	-	IEC 61158-2
Protection against polarity reversal	Protected against short-circuit and polarity reversal. Each connection against the other with max. supply voltage.	
Electrical damping (step width 0.1 s)	Set to 2 s (0 ... 100 s)	

Measuring accuracy	Acc. to IEC 60770-1
Reference conditions	• Increasing characteristic • Lower range value 0 bar/kPa/psi • Stainless steel seal diaphragm • Measuring cell with silicone oil • Room temperature 25 °C (77 °F)
Measuring span ratio r (spread, Turn-Down)	r = max. measuring span/set measuring span or nominal measuring range
Error in measurement at limit setting incl. hysteresis and reproducibility	
Linear characteristic	
- r ≤ 5	≤ 0.075 %
- 5 < r ≤ 100	≤ (0.005 · r + 0.05) %
Influence of ambient temperature (in percent per 28 °C (50 °F))	≤ (0.08 · r + 0.16) %
Long-term stability (temperature change ± 30 °C (± 54 °F))	≤ (0.25 · r) % in 5 years
Effect of mounting position	≤ 0.1 mbar/0.01 kPa/0.00145 psi per 10° inclination (zero point correction is possible with position error compensation)
Effect of auxiliary power supply (in percent per change in voltage)	0.005 % per 1 V
Measuring value resolution for PROFIBUS PA and FOUNDATION Fieldbus	$3 \cdot 10^{-5}$ of nominal measuring range

© Siemens 2020

SITRANS P300 for gauge pressure with PMC connection for the paper industry		
Operating conditions		
Installation conditions		
Ambient temperature	Observe the temperature class in areas subject to explosion hazard.	
• Measuring cell with silicone oil	-40 ... +85 °C (-40 ... +185 °F)	
• Display readable	-30 ... +85 °C (-22 ... +185 °F)	
• Storage temperature	-50 ... +85 °C (-58 ... +185 °F)	
Climatic class		
Condensation	Relative humidity 0 ... 100 % Condensation permissible, suitable for use in the tropics	
Degree of protection		
• according to EN 60529	IP65, IP68	
• according to NEMA 250	Type 4X, enclosure cleaning, resistant to lyes, steam to 150 °C (302 °F)	
Electromagnetic Compatibility		
• Emitted interference and interference immunity	Acc. to IEC 61326 and NAMUR NE 21	
Medium conditions		
Temperature of medium		
• Measuring cell with silicone oil	-40 ... +100 °C (-40 ... +212 °F)	
Design		
Weight (without options)	Approx. 1 kg (2.2 lb)	
Enclosure material	Stainless steel, mat. no. 1.4301/304	
Material of parts in contact with the medium		
• Seal diaphragm	Hastelloy C276, mat. no. 2.4819	
• Measuring cell filling	Silicone oil	
Surface quality touched-by-media	Ra-values ≤ 0.8 µm (32 µ inch)/welds Ra ≤ 1.6 µm (64 µ inch)	
Power supply U_H	**HART**	**PROFIBUS PA/ FOUNDATION Fieldbus**
Terminal voltage on transmitter	10.5 ... 42 V DC for intrinsically safe operation: 10.5 ... 30 V DC	
Power supply		Supplied through bus
Separate supply voltage	-	Not necessary
Bus voltage		
• Without Ex	-	9 ... 32 V
• With intrinsically-safe operation	-	9 ... 24 V
Current consumption		
• Max. basic current	-	12.5 mA
• Start-up current ≤ basic current	-	Yes
• Max. fault current in the event of a fault	-	15.5 mA
Fault disconnection electronics (FDE) available	-	Yes

© Siemens 2020

SITRANS P300 for gauge pressure with PMC connection for the paper industry		
Certificates and approvals	**HART**	**PROFIBUS PA/ FOUNDATION Fieldbus**
Classification according to PED 2014/68/EU	For gases of fluid group 1 and liquids of fluid group 1; complies with requirements of Article 4, paragraph 3 (sound engineering practice)	
Explosion protection		
Intrinsic safety "i"	PTB 05 ATEX 2048	
Marking	II 1/2 G Ex ia IIC/IIB T4/T5/T6 Ga/Gb	
Permissible ambient temperature		
• Temperature class T4	-40 ... +85 °C (-40 ... +185 °F)	
• Temperature class T5	-40 ... +70 °C (-40 ... +158 °F)	
• Temperature class T6	-40 ... +60 °C (-40 ... +140 °F)	
Connection	To certified intrinsically-safe circuits with peak values: U_i = 30 V, I_i = 100 mA, P_i = 750 mW, R_i = 300 Ω	To certified intrinsically-safe circuits with peak values: FISCO supply unit: U_i = 17.5 V, I_i = 380 mA, P_i = 5.32 W Linear barrier: U_i = 24 V, I_i = 250 mA, P_i = 1.2 W
Effective inner capacitance:	C_i = 6 nF	C_i = 1.1 nF
Effective internal inductance:	L_i = 0.4 mH	$L_i \leq 7$ µH
Explosion protection to FM for USA and Canada (cFM_{US})		
• Identification (DIP) or (IS); (NI)	Certificate of Compliance 3025099 CL I, DIV 1, GP ABCD T4 ... T6; CL II, DIV 1, GP EFG; CL III; CL I, ZN 0/1 AEx ia IIC T4 ... T6; CL I, DIV 2, GP ABCD T4 ... T6; CL II, DIV 2, GP FG; CL III	
• Identification (DIP) or (IS)	Certificate of Compliance 3025099C CL I, DIV 1, GP ABCD T4 ... T6; CL II, DIV 1, GP EFG; CL III; Ex ia IIC 4 ... T6; CL I, DIV 2, GP ABCD T4 ... T6; CL II, DIV 2, GP FG; CL III	

© Siemens 2020

HART communication	
HART	230 ... 1100 Ω
Protocol	HART Version 5.x
Software for computer	SIMATIC PDM
PROFIBUS PA communication	
Simultaneous communication with master class 2 (max.)	4
The address can be set using	Configuration tool Local operation (standard setting Address 126)
Cyclic data usage	
• Output byte	One measured value: 5 bytes Two measured values: 10 bytes
• Input byte	Register operating mode: 1 bytes Reset function due to metering. 1 bytes
Device profile	PROFIBUS PA Profile for Process Control Devices Version 3.0, class B
Function blocks	2
• Analog input	
- Adaptation to customer-specific process variables	Linearly rising or falling characteristic
- Electrical damping	0 ... 100 s adjustable
- Simulation function	Input /Output
- Limit monitoring	One upper and lower warning limit and one alarm limit respectively
• Register (totalizer)	Can be reset and preset Optional direction of counting Simulation function of the register output
- Limit monitoring	One upper and lower warning limit and one alarm limit respectively
• Physical block	1
Transducer blocks	2
• Pressure transducer block	
- Monitoring of sensor limits	Yes
- Specification of a container characteristic with	Max. 31 nodes
- Characteristic curve	Linear
- Simulation function	Available
• Transducer block "Electronic temperature"	
Simulation function	Available

FOUNDATION Fieldbus communication	
Function blocks	3 function blocks analog input, 1 function block PID
• Analog input	
- Adaptation to customer-specific process variables	Yes, linearly rising or falling characteristic
- Electrical damping, adjustable	0 ... 100 s
- Simulation function	Output/input (can be locked within the device with a bridge)
- Failure mode	parameterizable (last good value, substitute value, incorrect value)
- Limit monitoring	Yes, one upper and lower warning limit and one alarm limit respectively
- Square-rooted characteristic for flow measurement	Yes
• PID	Standard FOUNDATION Fieldbus function block
• Physical block	1 resource block
Transducer blocks	1 transducer block Pressure with calibration, 1 transducer block LCD
• Pressure transducer block	
- Can be calibrated by applying two pressures	Yes
- Monitoring of sensor limits	Yes
- Simulation function: Measured pressure value, sensor temperature and electronics temperature	Constant value or over parameterizable ramp function

© Siemens 2020

Selection and Ordering data		Article No.
SITRANS P300 pressure transmitters with PMC connection, single-chamber measuring enclosure, rating plate inscription in English		
with 4 ... 20 mA / HART ↗		**7MF8123-**
with PROFIBUS PA ↗		**7MF8124-**
with FOUNDATION Fieldbus (FF) ↗		**7MF8125-**
↗ Click on the Article No. for the online configuration in the PIA Life Cycle Portal.		■■■■■-■■■■
Measuring cell filling	**Measuring cell cleaning**	
Silicone oil	normal	**1**
Inert liquid	Cleanliness level 2 to DIN 25410	**3**
Measuring span		
1 bar[1]	(14.5 psi)	**B**
4 bar	(58 psi)	**C**
16 bar	(232 psi)	**D**
Wetted parts materials		
Seal diaphragm	Measuring cell	
Hastelloy	Stainless steel	**B**
Process connection		
• PMC Style Standard: Thread 1½"		**2**
• PMC Style Minibolt: front-flush 1" (minimum measuring span: 500 mbar (7.25 psi), not available with 1-bar-measuring cell (Option B))		**3**
Non-wetted parts materials		
• Stainless steel, deep-drawn and electrolytically polished		**4**
Version		
• Standard versions		**1**
Explosion protection		
• None		**A**
• With ATEX, Type of protection:		
- "Intrinsic safety (Ex ia)"		**B**
• Zone 20/21/22[2]		**C**
• Ex nA/nL (Zone 2)[3]		**E**
• With FM + CSA, Type of protection:		
- "Intrinsic Safe (is)" (planned)[4]		**M**
Electrical connection/cable entry		
• Screwed gland M20 x .5 (polyamide)[5]		**A**
• Screwed gland M20 x 1.5 (metal)		**B**
• Screwed gland M20 x 1.5 (stainless steel)		**C**
• Device plug M12 (stainless steel), without cable socket)		**G**
• ½-14 NPT metal thread[6]		**H**
• ½-14 NPT stainless steel thread[6]		**J**

Selection and Ordering data	Article No.
SITRANS P300 pressure transmitters with PMC connection, single-chamber measuring enclosure, rating plate inscription in English	
with 4 ... 20 mA / HART	**7MF8123-**
with PROFIBUS PA	**7MF8124-**
with FOUNDATION Fieldbus (FF)	**7MF8125-**
	■■■■■-■■■■
Display	
• Without display, with keys, closed lid	**1**
• With display and keys, closed lid [7]	**2**
• With display and keys, lid with polycarbonate disc (setting on HART devices: mA, with PROFIBUS PA and FOUNDATION Fieldbus equipment: pressure units)[7]	**4**
• With display and keys (setting acc. to specifications, Order code "Y21" or "Y22" required), lid with polycarbonate disc [7]	**5**
• With display and keys, lid with glass pane (setting on HART devices: mA, with PROFIBUS PA and FOUNDATION Fieldbus equipment: pressure unit)[7]	**6**
• With display (setting acc. to specifications, Order code "Y21" or "Y22" required), lid with glass panel[7]	**7**

Power supply units see Chap. 7 "Supplementary Components".

Included in delivery of the device:
- Quick-start guide
- Sealing ring

1) Only with "Standard" process connection"
2) Not in conjunction with electrical connection option A.
3) Only available together with electrical connection options B, C or G.
4) Explosion protection acc. to FM/CSA: suitable for installations according to NEC 500/505.
5) Only together with HART electronics.
6) Without cable gland.
7) Display cannot be turned.

© Siemens 2020

SITRANS P300 with PMC connection

Selection and Ordering data	Order code	HART	PA	FF
Further designs				
Add "**-Z**" to Article No. and specify Order code.				
Cable socket for device plugs M12				
• Stainless steel	**A51**	✓	✓	✓
Rating plate inscription (instead of English)				
• German	**B10**	✓	✓	✓
• French	**B12**	✓	✓	✓
• Spanish	**B13**	✓	✓	✓
• Italian	**B14**	✓	✓	✓
English rating plate Pressure units in inH_20 and/or psi	**B21**	✓	✓	✓
Quality test certificate, 5-point factory calibration (IEC 60770-2)	**C11**	✓	✓	✓
Inspection certificate Acc. to EN 10204-3.1	**C12**	✓	✓	✓
Factory certificate Acc. to EN 10204-2.2	**C14**	✓	✓	✓
Setting of the upper saturation limit of the output signal to 22.0 mA	**D05**	✓	✓	✓
Degree of protection IP65/IP68 (only for M20x1.5 and ½-14 NPT)	**D12**	✓	✓	✓
Mounting				
• Weldable sockets for standard 1½" threaded connection	**P01**	✓	✓	✓
• Weldable socket for minibolt connection 1" (incl. screw 5/16-18 UNC-2B and washer)	**P02**	✓	✓	✓

Selection and Ordering data	Order code	HART	PA	FF
Additional data				
Please add "**-Z**" to Article No. and specify Order code(s) and plain text.				
Measuring range to be set Specify in plain text (max. 5 characters): Y01: ... up to ... mbar, bar, kPa, MPa, psi	**Y01**	✓	✓[1]	
Stainless steel tag plate and entry in device variable (measuring point description) Max. 16 characters, specify in plain text: Y15:	**Y15**	✓	✓	✓
Measuring point text (entry in device variable) Max. 27 char., specify in plain text: Y16:	**Y16**	✓	✓	✓
Entry of HART address (TAG) Max. 8 char., specify in plain text: Y17:	**Y17**	✓		
Setting of pressure indication in pressure units Specify in plain text (standard setting: bar): Y21: mbar, bar, kPa, MPa, psi, ... Note: The following pressure units can be selected: bar, mbar, mm H_2O*), inH_2O*), ftH_2O*), mmHG, inHG, psi, Pa, kPa, MPa, g/cm², kg/cm², Torr, ATM or % *) ref. temperature 20 °C	**Y21**	✓	✓	✓
Setting of pressure indication in non-pressure units[2] Specify in plain text: Y22: ..... up to ..... l, m³, m, USg, ... (specification of measuring range in pressure units "**Y01**" is essential, unit with max. 5 characters)	**Y22 + Y01**	✓		
Preset bus address possible between 1 and 126 Specify in plain text: Y25:	**Y25**		✓	✓

Only "Y01" and "Y21" can be factory preset

✓ = available

[1] Measuring accuracies for PROFIBUS PA transmitters with Option Y01 are calculated in the same way as for HART devices.

[2] Preset values can only be changed over SIMATIC PDM.

© Siemens 2020

Dimensional drawings

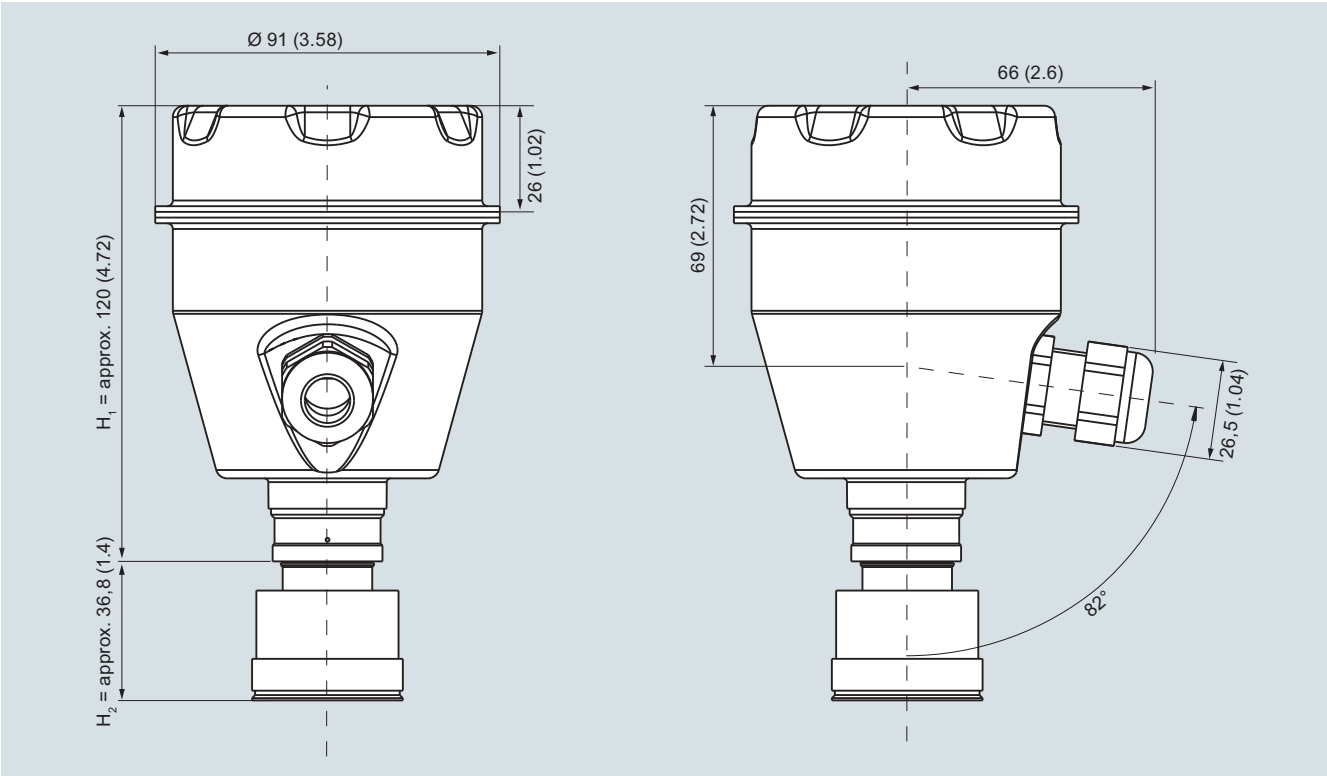

SITRANS P300 pressure transmitters for gauge pressure, with PMC connection, dimensions in mm (inch)

The diagram shows a SITRANS P300 with an example of a flange. In this drawing the height is subdivided into H_1 and H_2.

H_1 = Height of the SITRANS P300 up to a defined cross-section

H_2 = Height of the flange up to this defined cross-section

Only the height H_2 is indicated in the dimensions of the flanges.

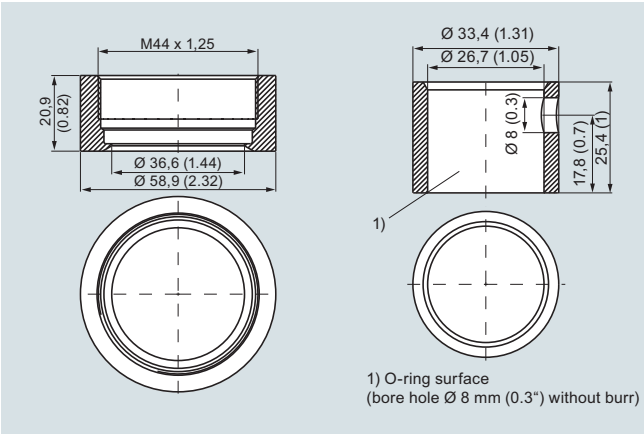

PMC Style Standard (left) and PMC Style Minibolt (right) weldable sockets, dimensions in mm (inch)

Material: Stainless steel, mat. No. 1.4404 / 316L

PMC Style Standard

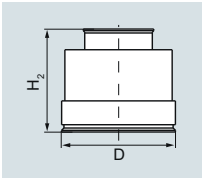

DN	PN	∅D	H_2
		40.4 mm (1.6")	Approx. 36.8 mm (1.4")

PMC Style Mini bolt

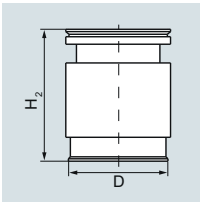

DN	PN	∅D	H_2
		26.3 mm (1.0")	Approx. 33.1 mm (1.3")

© Siemens 2020

Overview

SITRANS P320/P420 pressure transmitters are digital pressure transmitters featuring extensive user-friendliness and high accuracy. The parameter assignment is performed using input buttons or the HART interface.

The comprehensive functionality makes for precise adjustment of the pressure transmitter to the requirements of the plant. Operation is very user-friendly in spite of the numerous setting options.

Due to their advanced diagnostic functionalities according to NAMUR NE107, the SITRANS P320/P420 pressure transmitters are very suitable for use in chemical plants. Thanks to the advanced diagnostic functions and the process value storage, the SITRANS P420 is "Ready for Digitalization".

The "Remote Safety Handling" function saves customers significant amounts of time and money, because the SIL function can be switched on and validated remotely via SIMATIC PDM. This eliminates travel times and on-site operation via the local display or keyboard.

Parameter assignment using the HART protocol is very easy and quick thanks to the innovative EDD with integrated Quick Start wizard.

The transmitters can be equipped with various types of remote seals for special applications such as the measurement of highly viscous substances.

SITRANS P320/P420 pressure transmitters are available in various versions for measuring:

- Gauge pressure
- Absolute pressure
- Differential pressure
- Level
- Volume flow
- Mass flow

Benefits

- Diagnostic functions in accordance with NAMUR recommendation NE107
- SIL devices developed according to IEC 61508
- SIL validation on the device or remotely with SIMATIC PDM
- Reduction of internal inductance for Ex applications to LI = 0
- Step response time for pressure type T63 = 105 ms and for differential pressure type 135 ms.
- Minimal conformity error
- Very low temperature influence
- Very good long-term stability
- High quality and service life
- High reliability even under extreme chemical and mechanical loads
- For corrosive and non-corrosive gases, vapors and liquids
- Extensive diagnostics and simulation functions
- Separate replacement of measuring cell and electronics without recalibration
- Wetted parts made of high-grade materials (e.g., stainless steel, alloy, gold, Monel, tantalum)
- Infinitely adjustable measuring spans from 0.01 bar to 700 bar (0.15 psi to 10153 psi)
- Convenient parameterization over 4 input buttons and HART interface

Application

SITRANS P320/P420 pressure transmitters can be used in industrial areas with extreme chemical and mechanical loads.

The pressure transmitters can be used in zone 1 or zone 0 with the corresponding Ex approval.

The transmitters can be equipped with various designs of remote seals for special applications such as the measurement of highly viscous substances.

The pressure transmitter can be operated locally over 4 input buttons or programmed externally over HART interface.

Pressure transmitter for gauge pressure

Measured variable:

- Gauge pressure of corrosive and non-corrosive gases, vapors and liquids.

Measuring span (infinitely adjustable)

- For SITRANS P320/P420 with HART: 0.01 bar to 700 bar (0.15 psi to 10153 psi)

There are two series:

- Gauge pressure series
- Differential pressure series

Pressure transmitters for absolute pressure

Measured variable:

- Absolute pressure of corrosive and non-corrosive gases, vapors and liquids.

Measuring span (infinitely adjustable)

- For SITRANS P320/P420 with HART: 8.3 mbar a to 100 bar a (0.12 to 1450 psi a)

There are two series:

- Gauge pressure series
- Differential pressure series

© Siemens 2020

Pressure transmitters for differential pressure and flow

Measured variables:

- Differential pressure
- Small positive or negative overpressure
- Flow q ~ √Δp (together with a primary differential pressure transducer (see section "Flow meters"))

Measuring span (infinitely adjustable)

- For SITRANS P320/P420 with HART: 1 mbar to 30 bar (0.0145 to 435 psi)

Pressure transmitters for level

Measured variable:

- Level of corrosive and non-corrosive liquids in open and closed vessels.

Measuring span (infinitely adjustable)

- For SITRANS P320/P420 with HART: 25 mbar to 5 bar (0.363 to 72.5 psi)

Type of the mounting flange:

- EN 1092-1 flanges
- ASME B16.5 flanges
- J.I.S. flanges
- Diverse range of sealing surface forms available

Design

Depending on the customer-specific order, the device comprises different parts.

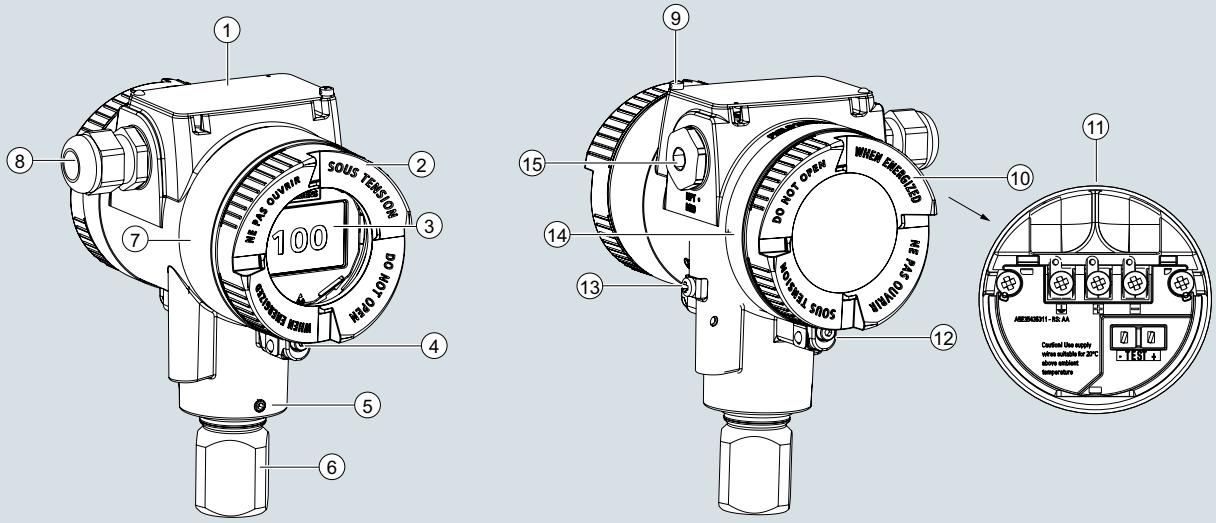

1. Cover over buttons and nameplate with general information
2. Cover (front) with glass pane (optional)
3. Display (optional)
4. Safety catch (front)
5. Locking screw for locking the enclosure
6. Process connection
7. Approval label with approval information
8. Cable inlet, optionally with cable gland
9. Locking screw for the cover over the buttons
10. Cover (rear) for electrical terminal compartment
11. Electrical terminal compartment
12. Safety catch (back)
13. Ground terminal
14. Nameplate with information on the remote seal
15. Blanking plug

Device front view

- The electronics enclosure is made of die cast aluminum or precision cast stainless steel.
- The enclosure has a removable circular cover at the front and the back.
- Depending on the device version, the front cover (2) may be designed as an inspection window.
- The cable inlet (8) to the electrical terminal compartment is at the side; either the left or right-hand one can be used. The unused opening is closed with a blanking plug (15).
- The ground terminal (13) is located on the side.
- The electrical terminal compartment (11) for the auxiliary power and shield is accessible when you remove the back cover (10).
- The measuring cell with process connection (6) is located in the bottom part of the enclosure.
  The measuring cell is prevented from rotating by a locking screw (5).
- Thanks to the modular design of the pressure transmitter, the measuring cell and application electronics or terminal compartment can be replaced if required.
- The cover over buttons (1), under which there are 4 buttons, is located on the upper face of the enclosure. The nameplate with general information is located on the cover over the buttons.

© Siemens 2020

Nameplates

Nameplate

The nameplate with the article no. and other important information, such as design details and technical data, is located on the cover over the buttons.

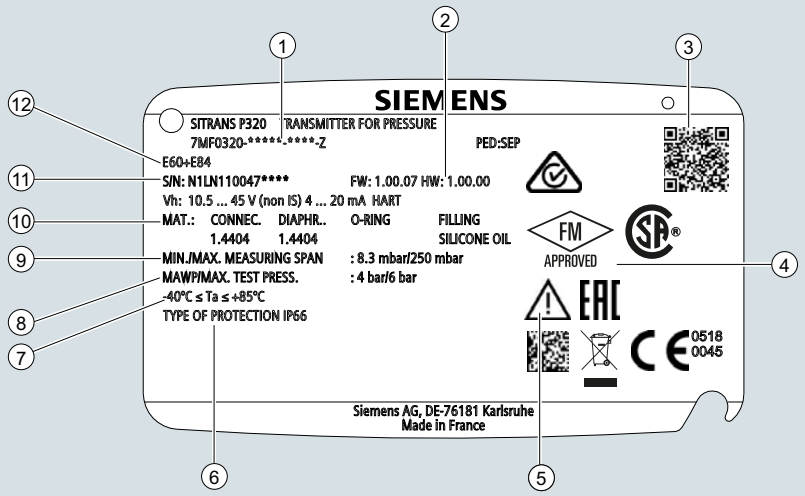

1. Article number
2. Firmware and hardware identification
3. QR code to the mobile website with device-specific information
4. Conformity with country-specific directives
5. Note operating instructions, certificates and approvals
6. Protection class
7. Permitted ambient temperature for the hazardous area of the corresponding temperature class
8. Maximum allowable operating pressure / maximum allowable test pressure
9. Minimum/maximum measuring span
10. Material: connection, diaphragm, O-ring, oil
11. Serial number
12. Order supplement (options, order code)

Approval label with approval information

The approval label with approval information is located on the front of the enclosure.

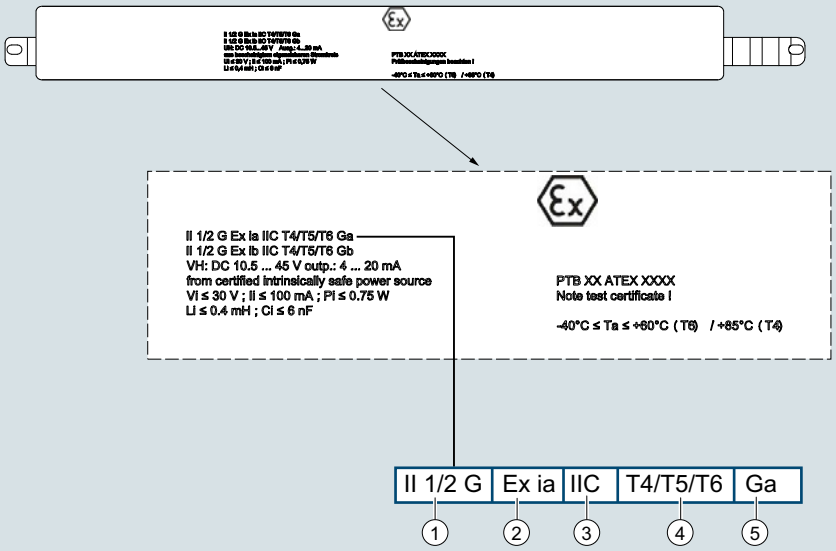

1. Characteristics of the hazardous area
2. Type of protection
3. Group (gas, dust)
4. Maximum surface temperature (temperature class)
5. Device protection level

© Siemens 2020

Measuring point label

The measuring point label is located under the front cover.

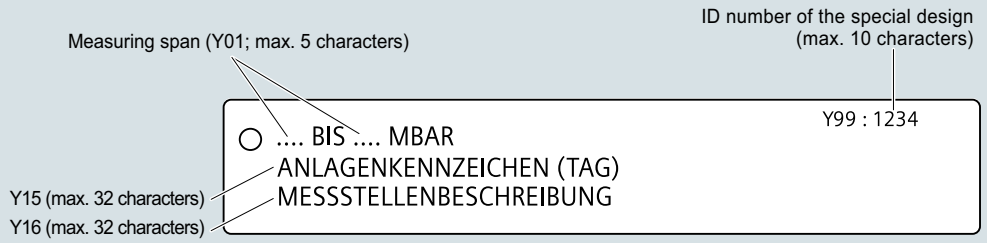

Nameplate with information on the remote seals

The nameplate with information on the remote seals is located on the back of the enclosure.

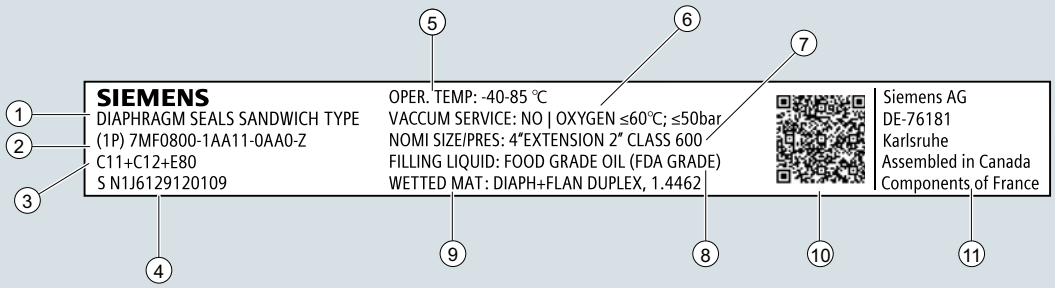

1. Diaphragm seals of sandwich type
2. Article number
3. Order supplement (options, order code)
4. Serial number
5. Operating temperature
6. Vacuum pressure service: No, oxygen ≤ 60 °C; ≤ 50 bar
7. Nominal diameter/pressure: 4 inch, 50 mm tube length, CLASS 600
8. Filling liquid: Food grade oil (FDA-compliant)
9. Wetted materials: Diaphragm duplex, 1.4462
10. QR code to mobile website with device-specific information
11. Assembly and manufacturing location

© Siemens 2020

Function

Adjustable parameters and diagnostics

SITRANS P320/P420 with HART communication

Parameters	Input buttons	SITRANS P320	SITRANS P420
Application, measurement type	x	x	x
Lower range value/ upper range value	x	x	x
Lower range value/ upper range value	x	x	x
Electrical damping	x	x	x
Zero adjustment	x	x	x
Fault current	x	x	x
Saturation limits	x	x	x
Scaling of the display	x	x	x
Characteristic selection	x	x	x
Temperature unit	x	x	x
Key lock	x	x	x
Change user pin	x	x	x
Functional safety	x	x	x
Loop test	x	x	x
Start view	x	x	x
Pressure reference	x	x	x
Reset	x	x	x
Diagnostics and trend log			
Min/Max pointer		x	x
Limit monitoring		2	2
Event counter (overflow/underflow)		2	2
Trend log			2, max. 1 500 values
Diagnostic log		x	x
Parameters change log			x

Available physical units of display for SITRANS P320/P420

Physical variable	Physical dimensions
Pressure (setting can also be made in the factory)	Pa, MPa, kPa, hPa, bar, mbar, psi, g/cm^2, kg/cm^2, kgf/cm^2, inH_2O, inH_2O (4 °C), ftH_2O, mmH_2O, mmH_2O (4 °C), mH_2O (4 °C), mmHg, inHg, atm, torr
Level (height data)	m, cm, mm, ft, in
Volumes (fill level)	m^3, l, hl, in^3, ft^3, yd^3, gal, gal (UK), bu, bbl, bbl (US), SCF, Nm^3, Nl
Volume (flow)	m^3/sec, m^3/h, m^3/d, l/sec, l/min, l/h, Ml/d, ft^3/sec, ft^3/h, ft^3/d, SCF/min, SCF/h, Nl/h, Nm^3/hgal/sec, gal/min, gal/h, gal/d, Mgal/d, gal (UK))/sec, gal (UK)/min, gal (UK)/h, gal (UK)/d, bbl/sec, bbl/min, bbl/h, bbl/d,
Mass (flow)	Kg/sec, kg/min, kg/h, kg/d, g/sec, g/min, g/h, t/min, t/h, t/d, lb/sec, lb/min, lb/h, lb/d, ton/min, ton/h, ton/d, ton (UK)/h, ton (UK)/d
Temperature	°C, °F
Miscellaneous	%, mA, free text max. 12 characters

For more device information and technical specifications, refer to the individual device versions.

© Siemens 2020

Technical specifications

SITRANS P320 / SITRANS P420 for gauge pressure (pressure series)			
Input			
Measured variable	Gauge pressure		
Measuring span (infinitely adjustable) or measuring range, max. permissible operating pressure (in accordance with Pressure Equipment Directive 2014/68/EU) and max. test pressure (pursuant to DIN 16086) (for oxygen measurement, max. 100 bar/10 MPa/1450 psi and 60 °C (140 °F) ambient temperature/temperature of medium)	Measuring span	Max. permissible operating pressure MAWP (PS)	Maximum permissible test pressure
	8.3 ... 250 mbar	4 bar	6 bar
	0.83 ... 25 kPa	0.4 MPa	0.6 MPa
	0.12 … 3.6 psi	58 psi	87 psi
	0.01 ... 1 bar	6 bar	9 bar
	1 ... 100 kPa	0.6 MPa	0.9 MPa
	0.15 … 14.5 psi	87 psi	130 psi
	0.04 ... 4 bar	20 bar	30 bar
	4 ... 400 kPa	2 MPa	3 MPa
	0.58 … 58 psi	290 psi	435 psi
	0.16 ... 16 bar	45 bar	70 bar
	0.016 ... 1.6 MPa	4.5 MPa	7 MPa
	2.3 … 232 psi	652 psi	1015 psi
	0.63 ... 63 bar	80 bar	120 bar
	0.063 ... 6.3 MPa	8 MPa	12 MPa
	9.1 … 914 psi	1160 psi	1740 psi
	1.6 ... 160 bar	240 bar	360 bar
	0.16 ... 16 MPa	24 MPa	36 MPa
	23 … 2321 psi	3481 psi	5221 psi
	4 ... 400 bar	400 bar	600 bar
	0.4 ... 40 MPa	40 MPa	60 MPa
	58 … 5802 psi	5802 psi	8702 psi
	7 ... 700 bar	800 bar	800 bar
	0.7 ... 70 MPa	80 MPa	80 MPa
	102 … 10153 psi	11603 psi	11603 psi
Measuring limits			
• Low measuring limit	For 250 mbar/25 kPa/3.6 psi measuring cells, the lower measuring limit is 750 mbar a/75 kPa a/10.8 psi a. The measuring cell is vacuum-resistant up to 30 mbar a/3 kPa a/0.44 psi a.		
- Measuring cell with silicone oil filling	30 mbar a/3 kPa a/0.44 psi a		
- Measuring cell with inert oil	30 mbar a/3 kPa a/0.44 psi a		
- Measuring cell with FDA-compliant oil	100 mbar a/10 kPa a/1.45 psi a		
• Upper measuring limit	100% of the max. measuring span (for oxygen measurement max. 100 bar/10 MPa/ 1450 psi and 60 °C (140 °F) ambient temperature/temperature of medium)		
• Lower range value	Between the measuring limits (infinitely adjustable)		
Output	**HART**		
Output signal	4 ... 20 mA		
• Low saturation limit (infinitely adjustable)	3.55 mA, factory preset to 3.8 mA		
• High saturation limit (infinitely adjustable)	22.8 mA, factory-set to 20.5 mA or optionally 22.0 mA		
• Ripple (without HART communication)	$I_{pp} \leq 0.5\%$ of max. output current		
Adjustable damping	0 … 100 s, continuously adjustable over remote operation		
	0 … 100 s, in increments of 0.1 s, adjustable over display		
• Current transmitter	3.55 … 22.8 mA		
• Failure signal	3.55 … 22.8 mA (factory preset to 3.55 mA)		
Load	Resistor R [Ω]		
• Without HART communication	$R = (U_H - 10.5\ V)/22.8\ mA$, U_H: Power supply in V		
• With HART communication	R = 230 … 1100 Ω (HART communicator (handheld))		
	R = 230 … 500 Ω (SIMATIC PDM)		
Characteristic curve	• Linearly increasing or linearly decreasing • Linear increase or decrease or according to the square root (only for differential pressure and flow)		
Physical bus	-		
Polarity-independent	-		

© Siemens 2020

SITRANS P320 / SITRANS P420 for gauge pressure (pressure series)		
Measuring accuracy		
Reference conditions	• According to EN 60770-1 • Rising characteristic curve • Lower range value 0 bar/kPa/psi • Seal diaphragm stainless steel • Measuring cell with silicone oil filling • Room temperature 25 °C (77 °F)	
Conformity error at limit point setting, including hysteresis and repeatability		
Measuring span ratio r (spread, Turn-Down)	r = max. measuring span/set measuring span and nominal measuring range	
• Linear characteristic		
- 250 mbar/25 kPa/3.6 psi	r ≤ 1.25:	≤ 0.075% (SITRANS P320) ≤ 0.065% (SITRANS P420)
	1.25 < r ≤ 30:	≤ (0.008 · r + 0.055)%
- 1 bar/100 kPa/14.5 psi 4 bar/400 kPa/58 psi 16 bar/1.6 MPa/232 psi 63 bar/6.3 MPa/914 psi 160 bar/16 MPa/2321 psi	r ≤ 5:	≤ 0.065% (SITRANS P320) ≤ 0.04% (SITRANS P420)
	5 < r ≤ 100:	≤ (0.004 · r + 0.045)%
- 400 bar/40 MPa/5802 psi 700 bar/70 MPa/10152 psi	r ≤ 3: 3 < r ≤ 100:	≤ 0.075% (SITRANS P320) ≤ (0.005 · r + 0.05)% (SITRANS P320)
	r ≤ 5: 5 < r ≤ 100:	≤ 0.075% (SITRANS P420) ≤ (0.005 · r + 0.05)% (SITRANS P420)
Influence of ambient temperature in % per 28 °C (50 °F)		
• 250 mbar/25 kPa/3.6 psi	≤ (0.16 · r + 0.1)%	
• 1 bar/100 kPa/14.5 psi	≤ (0.05 · r + 0.1)%	
• 4 bar/400 kPa/58 psi 16 bar/1.6 MPa/232 psi 63 bar/6.3 MPa/914 psi 160 bar/16 MPa/2321 psi 400 bar/40 MPa/5802 psi	≤ (0.025 · r + 0.125)%	
• 700 bar/70 MPa/10152 psi	≤ (0.08 · r + 0.16)%	
Long-term stability at ±30 °C (±54 °F)		
• 250 mbar/25 kPa/3.6 psi	≤ (0.25 · r)% per year	
• 1 bar/100 kPa/14.5 psi	In 5 years ≤ (0.25 · r)% In 10 years ≤ (0.35 · r)%	
• 4 bar/400 kPa/58 psi 16 bar/1.6 MPa/232 psi 63 bar/6.3 MPa/914 psi 160 bar/16 MPa/2321 psi 400 bar/40 MPa/5802 psi	In 5 years ≤ (0.125 · r)% In 10 years ≤ (0.15 · r)%	
• 700 bar/70 MPa/10152 psi	In 5 years ≤ (0.25 · r)% In 10 years ≤ (0.35 · r)%	
Step response time T_{63} (without electrical damping)	≤ 0.105 s	
Effect of mounting position (in pressure per change of angle)	≤ 0.05 mbar/0.005 kPa/0.000725 psi per 10° incline (zero point correction is possible with position error compensation)	
Effect of auxiliary power (in % per voltage change)	0.005% per 1 V	

© Siemens 2020

SITRANS P320 / SITRANS P420 for gauge pressure (pressure series)	
Operating conditions	
Temperature of medium	
• Measuring cell with silicone oil filling	-40 ... +100 °C (-40 ... +212 °F)
• Measuring cell with inert oil	
- 1 bar/100 kPa/14.5 psi 4 bar/400 kPa/58 psi 16 bar/1.6 MPa/232 psi 63 bar/6.3 MPa/914 psi	-40 ... +100 °C (-40 ... +212 °F)
- 160 bar/16 MPa/2321 psi 400 bar/40 MPa/5802 psi 700 bar/70 MPa/10152 psi	-20 ... +100 °C (-4 ... +212 °F)
• Measuring cell with FDA-compliant oil	-10 ... +100 °C (14 ... +212 °F)
Ambient conditions	
• Ambient temperature/enclosure	Observe the temperature class in areas subject to explosion hazard.
- Measuring cell with silicone oil filling	-40 ... +85 °C (-40 ... +185 °F)
- Measuring cell with inert oil for gauge pressure measuring cells: 1 bar/100 kPa/14.5 psi 4 bar/400 kPa/58 psi 16 bar/1.6 MPa/232 psi 63 bar/6.3 MPa/914 psi	-40 ... +85 °C (-40 ... +185 °F)
- Measuring cell with inert oil	-40 … +85 °C (-40 … +185 °F)
- Measuring cell with FDA-compliant oil	-10 ... +85°C (14 ... +185°F)
- Display	-20 … +80 °C (-4 … +176 °F)
• Storage temperature	-50 ... +85 °C (-58 ... +185 °F) (with FDA-compliant oil: -20 ... + 85 °C (-4 ... +185 °F))
• Climatic class in accordance with IEC 60721-3-4	4K4H
• Degree of protection	
- According to IEC 60529	IP66, IP68
- According to NEMA 250	Type 4X
• Electromagnetic compatibility	
- Emitted interference and interference immunity	According to IEC 61326 and NAMUR NE 21
Design	
Weight	Approx. 2.3 kg (5.07 lb) with aluminum enclosure Approx. 4.2 kg (9.25 lb) for stainless steel enclosure
Material	
• Wetted parts materials	
- Process connection	Stainless steel, material no. 1.4404/316L or Alloy C22, material no. 2.4602
- Oval flange	Stainless steel, mat. no. 1.4404/316L
- Seal diaphragm	Stainless steel, material no. 1.4404/316L or Alloy C276, material no. 2.4819
• Non-wetted parts materials	
- Electronics enclosure	• Low-copper die-cast aluminum GD-AlSi 12 or stainless steel precision casting, mat. no. 1.4409/ CF-3M • Standard: Powder coating with polyurethane Option: 2 coats: Coat 1: epoxy-based; coat 2: Polyurethane • Stainless steel type plate (1.4404/316L)
- Mounting bracket	Electrogalvanized steel or stainless steel
Process connection	• Connection shank G1/2A according to DIN EN 837-1 • Female thread ½-14 NPT • Male thread M20 x 1.5 and ½-14 NPT • Oval flange (PN 160 (MWP 2320 psi g)) with fastening screw thread: - 7/16-20 UNF according to EN 61518 - M10 according to DIN 19213 • Oval flange (PN 420 (MWP 2320 psi g)) with fastening screw thread: - 7/16-20 UNF according to EN 61518 - M12 according to DIN 19213 • Male thread M20 x 1.5 and ½-14 NPT
Electrical connection	Cable entry via the following screwed glands: • M20 x 1.5 • ½-14 NPT • Device plug Han 7D/Han 8D[1)] • Device plug M12
Displays and controls	
Keys	4 keys for operation directly on the device
Display	• With or without integrated display (optional) • Cover with inspection window (optional)

© Siemens 2020

SITRANS P320 / SITRANS P420 for gauge pressure (pressure series)	
Auxiliary power U_H	
Terminal voltage on pressure transmitter	10.5 ... 45 V DC 10.5 ... 30 V DC in intrinsically safe mode
Ripple	$U_{SS} \leq 0.2$ V (47 … 125 Hz)
Noise	$U_{eff} \leq 1.2$ mV (0.5 … 10 kHz)
Auxiliary power	–
Separate supply voltage	–
Certificates and approvals	
Classification according to pressure equipment directive (PED 2014/68/EU)	For gases of fluid group 1 and liquids of fluid group 1; complies with requirements of article 4, paragraph 3 (sound engineering practice)
Drinking water	
• WRAS (England)	No.: 1903094 (option E83)
• ACS (France)	No.: 18 ACC LY 277 (option E85)
• NSF (USA)	No.: 20180920-MH61350 (option E84)
CRN (Canada)	No.: 0F9863.5C (option E60)
Explosion protection acc. to NEPSI (China)	No.: GYJ19.1058X (option E27)
Explosion protection acc. to INMETRO (Brazil)	No.: BRA-18-GE-0035X (option E25)
Explosion protection	
• Intrinsic safety "i"	
- Marking	II 1/2 G Ex ia/ib IIC T4/T6 Ga/Gb
- Permissible ambient temperature	-40 ... +80 °C (-40 ... +176 °F) temperature class T4 -40 ... +55 °C (-40 ... +131 °F) temperature class T6
- Permissible temperature of measuring medium	-40 ... +100 °C (-40 ... +212 °F) temperature class T4 -40 ... +70 °C (-40 ... +158 °F) temperature class T6
- Connection	To certified intrinsically safe circuits with peak values: U_i = 30 V, I_i = 101 mA, P_i = 760 mW U_i = 29 V, I_i = 110 mA, P_i = 800 mW
- Effective internal inductance/capacitance	L_i = 0.24 µH/C_i = 3.29 nF
• Flameproof enclosure "d"	
- Marking	Ex II 1/2 G Ex ia/db IIC T4/T6 Ga/Gb
- Permissible ambient temperature	-40 ... +80 °C (-40 ... +176 °F) temperature class T4 -40 ... +70 °C (-40 ... +158 °F) temperature class T6
- Permissible temperature of measuring medium	-40 ... +100 °C (-40 ... +212 °F) temperature class T4 -40 ... +70 °C (-40 ... +158 °F) temperature class T6
- Connection	To a circuit with the operating values: U_n = 10.5 to 45 V, 4 ... 20 mA
• Dust explosion protection for zones 21, 22	
- Marking	Ex II 2D Ex tb IIIC T120 °C Db Ex II 3D Ex tc IIIC T120 °C Dc
- Permissible ambient temperature	-40 ... +80 °C (-40 ... +176 °F)
- Permissible temperature of measuring medium	-40 ... +100 °C (-40 ... +212 °F)
- Max. surface temperature	120 °C (248 °F)
- Connection	To a circuit with the operating values: U_n = 10.5 to 45 V, 4 ... 20 mA
• Dust explosion protection for zones 20, 21, 22	
- Marking	Ex II 1D Ex ia IIIC T120 °C Da Ex II 2D Ex ib IIIC T120 °C Db
- Permissible ambient temperature	-40 ... +80 °C (-40 ... +176 °F)
- Permissible temperature of measuring medium	-40 ... +100 °C (-40 ... +212 °F)
- Connection	To certified intrinsically safe circuits with the peak values: U_i = 30 V, I_i = 101 mA, P_i = 760 mW U_i = 29 V, I_i = 110 mA, P_i = 800 mW
- Effective internal inductance/capacitance	L_i = 0.24 µH/C_i = 3.29 nF

© Siemens 2020

SITRANS P320 / SITRANS P420 for gauge pressure (pressure series)	
• Type of protection for Zone 2	
- Marking	Ex II 3G Ex ec IIC T4/T6 Gc
- Permissible ambient temperature "ec"	-40 ... +80 °C (-40 ... +176 °F) temperature class T4 -40 ... +40 °C (-40 ... +104 °F) temperature class T6
- Permissible temperature of measuring medium	-40 ... +100 °C (-40 ... +212 °F) temperature class T4 -40 ... +70 °C (-40 ... +158 °F) temperature class T6
- "ec" connection	To a circuit with the operating values: U_n = 10.5 to 30 V, 4 ... 20 mA
• Explosion protection acc. to FM	Available soon
- Marking (XP/DIP) or IS; NI; S	CL I, DIV 1, GP ABCD T4 ... T6; CL II, DIV 1, GP EFG; CL III; Ex ia IIC T4 ... T6: CL I, DIV 2, GP ABCD T4 ... T6; CL II, DIV 2, GP FG; CL III
• Explosion protection according to CSA	Available soon
- Marking (XP/DIP) or (IS)	CL I, DIV 1, GP ABCD T4 ... T6; CL II, DIV 1, GP EFG; CL III; Ex ia IIC T4 ... T6: CL I, DIV 2, GP ABCD T4 ... T6; CL II, DIV 2, GP FG; CL III
NAMUR recommendations	
• NE 06	Standardized Electrical Signals and Questions Relating to Engineering Technology
• NE 21	Electromagnetic Compatibility (EMC) of Industrial Process and Laboratory Control Equipment
• NE 23	Extra Low Voltage Circuits with Safe Separation
• NE 43	Standardization of the Signal Level for the Failure Information of Digital Transmitters
• NE 53	Software and Hardware of Field Devices and Signal Processing Devices with Digital Electronics
• NE 80	The Application of the Pressure Equipment Directive to Process Control Devices
• NE 105	Specifications for Integrating Fieldbus Devices in Engineering Tools for Field Devices
• NE 107	Self-Monitoring and Diagnosis of Field Devices
• NE 131	NAMUR Standard Device - Field Devices for Standard Applications

[1] Han 8D is identical to Han 8U.

HART communication	
HART	230 ... 1100 Ω
Protocol	HART 7
Software for computer	SIMATIC PDM

© Siemens 2020

Selection and ordering data

	Article No.
Pressure transmitters for gauge pressure (pressure series)	
SITRANS P320 ↗	**7MF030**■ - ■■■■■ - ■■■■
SITRANS P420 ↗	**7MF040**■ - ■■■■■ - ■■■■
↗ Click on the Article no. for the online configuration in the PIA Life Cycle Portal.	
Communication	
HART, 4 ... 20 mA	**0**
Measuring cell filling	
Silicone oil	**1**
Inert liquid	**3**
Neobee oil	**4**
Maximum measuring span	
250 mbar (3.6 psi)	**F**
1000 mbar (14.5 psi)	**J**
4000 mbar (58 psi)	**N**
16 bar (232 psi)	**Q**
63 bar (914 psi)	**T**
160 bar (2321 psi)	**V**
400 bar (5802 psi)	**W**
700 bar (10153 psi)	**X**
Process connection	
Male thread M20 x 1.5	**B**
Male thread G½ (DIN EN 837-1)	**D**
Female thread ½-14 NPT	**E**
Male thread ½-14 NPT	**F**
Oval flange, mounting thread: $^{7}/_{16}$-20 UNF (IEC 61518)	**G**
Oval flange, mounting thread: M10 (DIN 19213)	**H**
Oval flange, mounting thread: M12 (DIN 19213)	**J**
Version for diaphragm seal pressure	**U**
Wetted parts materials: Process connection, seal diaphragm	
Stainless steel 316L/1.4404, stainless steel 316L/1.4404	**0**
Stainless steel 316L/1.4404, alloy C276/2.4819	**1**
Alloy C22/2.4602, alloy C276/2.4819	**2**
Non-wetted parts materials	
Die-cast aluminum	**1**
Stainless steel precision casting CF3M/1.4409 similar to 316L	**2**
Enclosure	
Dual chamber device	**5**
Type of protection	
Without Ex	**A**
Intrinsic safety	**B**
Flameproof enclosure	**C**
Flameproof enclosure, intrinsic safety	**D**
Dust protection by enclosure Zone 21/22 (DIP), increased safety Zone 2	**L**
Dust protection by enclosure Zone 20/21/22 (DIP), increased safety Zone 2	**M**
Combination of options B, C and L (zone model)	**S**
Combination of options B, C and M (zone model, Class DCable gland must be ordered separately as option (Axx)ivision)	**T**
Electrical connections/cable entries	
Thread for cable gland: Cable gland must be ordered separately as option (Axx)	
• 2 x M20 x 1.5	**F**
• 2 x ½-14 NPT	**M**
Local operation/display	
Without display (cover closed)	**0**
With display (cover closed)	**1**
With display (cover with glass pane)	**2**

© Siemens 2020

Selection and ordering data

Options	Order code
Append "-**Z**" to Article No., add order code and plain text or entry from drop-down list.	
Cable glands included	
Plastic	**A00**
Metal	**A01**
Stainless steel	**A02**
Stainless steel 316L/1.4404	**A03**
CMP, for XP devices	**A10**
CAPRI ADE 4F, CuZn, cable inner diameter 7 ... 12 mm, cable outer diameter 10 ... 16 mm	**A11**
CAPRI ADE 4F, stainless steel, cable inner diameter 7 ... 12 mm, cable outer diameter 10 ... 16 mm	**A12**
Device plug Han mounted left	
Device plug Han 7D (plastic, straight)	**A30**
Device plug Han 7D (plastic, angled)	**A31**
Device plug Han 7D (metal, straight)	**A32**
Device plug Han 7D (metal, angled)	**A33**
Device plug Han 8D (plastic, straight)	**A34**
Device plug Han 8D (plastic, angled)	**A35**
Device plug Han 8D (metal, straight)	**A36**
Device plug Han 8D (metal, angled)	**A37**
Cable socket included	
Plastic, for device plug Han 7D and Han 8D	**A40**
Metal, for device plug Han 7D and Han 8D	**A41**
Device plug M12 mounted left	
Stainless steel, without cable socket	**A62**
Stainless steel, with cable socket	**A63**
Cable entry/connector mounting	
2x sealing plugs M20 x 1.5, IP66/68 installed on both sides	**A90**
2x sealing plugs ½-14 NPT, IP66/68 installed on both sides	**A91**
Cable gland/connector mounted left	**A97**
Cable gland/connector mounted on right	**A99**
Nameplate labeling (standard labeling: English, unit bar)	
German (bar)	**B11**
French (bar)	**B12**
Spanish (bar)	**B13**
Italian (bar)	**B14**
Chinese (bar)	**B15**
Russian (bar)	**B16**
English (psi)	**B20**
English (Pa)	**B30**
Chinese (Pa)	**B35**
Certificates	
Quality test certificate, 5-point factory calibration (IEC 60770-2)	**C11**
Inspection certificate (EN 10204-3.1) - Material of pressurized and wetted parts	**C12**
Factory certificate - NACE (MR 0103-2012 and MR 0175-2009))	**C13**
Factory certificate (EN 10204-2.2) - Wetted parts	**C14**
Inspection certificate (EN 10204-3.1) - PMI test of pressurized and wetted parts	**C15**
Certificates for functional safety	
Functional safety (IEC 61508) - SIL2/3	**C20**

Options	Order code
Append "-**Z**" to Article No., add order code and plain text or entry from drop-down list.	
Device options	
PDF file with device settings	**D10**
Double layer coating (epoxy resin and polyurethane) 120 µm of enclosure and cover	**D20**
FVMQ enclosure sealing	**D21**
IP66/IP68 degree of protection (not for device plugs M12 and Han)	**D30**
TAG label empty	**D40**
Without labeling of the measuring range on the TAG label	**D41**
Stainless steel Ex plate 1.4404/316L	**D42**
Overvoltage protection up to 6 kV (external)	**D71**
Adhesive labels on transport packaging (supplied by customer)	**D90**
General approval without Ex approval	
Worldwide (CE, RCM) except EAC, FM, CSA, KCC	**E00**
Worldwide (CE, RCM, EAC, FM, CSA, KCC)	**E01**
CSA (USA and Canada)	**E06**
EAC	**E07**
FM	**E08**
KCC	**E09**
Export approval CPA (China)	**E12**
Explosion protection approvals	
ATEX (Europe)	**E20**
CSA (USA and Canada)	**E21**
FM (USA and Canada)	**E22**
IECEx (Worldwide)	**E23**
EACEx (GOST-R, -K, -B)	**E24**
INMETRO (Brazil)	**E25**
KCs (Korea)	**E26**
NEPSI (China)	**E27**
PESO (India)	**E28**
UKR Sepro (Ukraine)	**E30**
ATEX (Europe) and IECEx (Worldwide)	**E47**
CSA (Canada) and FM (USA)	**E48**
ATEX (Europe) and IECEx (Worldwide) + CSA (Canada) and FM (USA)	**E49**
Marine approvals	
DNV-GL (Det Norske Veritas/Germanischer Lloyd)	**E50**
LR (Lloyds Register)	**E51**
BV (Bureau Veritas)	**E52**
ABS (American Bureau of Shipping)	**E53**
RMR (Russian Maritime Register)	**E55**
KR (Korean Register of Shipping)	**E56**
RINA (Registro Italiano Navale)	**E57**
CCS (China Classification Society)	**E58**
Country-specific approvals	
CRN approval Canada (Canadian Registration Number)	**E60**
Special approvals	
Oxygen application (with inert liquid, max. 100 bar (1 450 psi) at 60° C (140 °F))	**E80**
Dual seal	**E81**
WRC / WRAS (drinking water); only with pressure cap O-rings made of EPDM	**E83**
NSF61 (drinking water)	**E84**
ACS (drinking water)	**E85**

© Siemens 2020

Options	Order code
Append "-**Z**" to Article No., add order code and plain text or entry from drop-down list.	
Mounting bracket	
Steel, galvanized	**H01**
Stainless steel 1.4301/304	**H02**
Stainless steel 1.4404/316L	**H03**
Flange connections with flange EN 1092-1	
With flange adapter G½ Form B1	
• DN 25 PN 40, stainless steel 1.4571/316Ti	**J80**
• DN 50 PN 40, stainless steel 1.4571/316Ti	**J81**
• DN 80 PN 40, stainless steel 1.4571/316Ti	**J82**
With siphon G½ Form B1	
• DN 25 PN 40, stainless steel 1.4571/316Ti	**J83**
• DN 50 PN 40, stainless steel 1.4571/316Ti	**J84**
• DN 80 PN 40, stainless steel 1.4571/316Ti	**J85**
• DN 25 PN 100, stainless steel 1.4571/316Ti	**J86**
Process flanges, gaskets (instead of standard gaskets FKM (FPM))	
Seal (EN 837-1) material Fe (soft iron)	**K60**
Seal (EN 837-1) material 1.4571	**K61**
Seal (EN 837-1) material Cu	**K62**
Process connection	
Process connection male thread G½, bore hole 11 mm	**K80**
Shut-off valves, valve manifolds	
With mounted valve manifold 7MF9011-4EA, process connection at transmitter G½ shank, PTFE sealing ring and pressure test certified in in factory certificate (EN 10204-2.2)	**T02**
With mounted valve manifold 7MF9011-4FA, process connection at transmitter female thread ½-14 NPT, sealing tape. With PTFE sealing ring and pressure test certified in factory certificate (EN 10204-2.2)	**T03**
With mounted valve manifold 7MF9411-5AA, process connection at transmitter oval flange with PTFE gasket, steel mounting screws, pressure test certified in factory certificate (EN 10204-2.2)	**T05**
With mounted valve manifold 7MF9411-5AA, process connection at transmitter oval flange with PTFE gasket, stainless steel mounting screws, pressure test certified in factory certificate (EN 10204-2.2)	**T06**

Options	Order code
Append "-**Z**" to Article No., add order code and plain text or entry from drop-down list.	
Device settings	
Measuring span Lower range value (max. 5 characters), upper range value (max. 5 characters), unit [mbar, bar, kPa, MPa, psi, ...], example: -0.5 ... 10.5 psi Input field 1 and input field 2: max. 5 characters and numbers only; decimal places as dot (comma is automatically converted to dot). Drop-down list: Pa, MPa, kPa, hPa, bar, mbar, psi, g/cm^2, kg/cm^2, kgf/cm^2, inH_2O, inH_2O (4°C), ftH_2O, mmH_2O, mmH_2O (4°C), mH_2O (4°C), mmHg, inHg, atm, torr	**Y01**
TAG (on stainless steel plate and device parameters, max. 32 characters) Input field: Free text, max. 32 characters	**Y15**
Measuring point description (on stainless steel plate and device parameters, max. 32 characters) Input field: Free text, max. 32 characters	**Y16**
TAG short (device parameters, max. 8 characters) Input field: Free text, max. 8 characters	**Y17**
Local display [Pressure, Percent], reference [None, Absolute, Relative], example: Pressure gauge Drop-down list: Percent, pressure unit, pressure unit abs., pressure unit gauge	**Y21**
Local display Scaling with standard units [m^3/s, l/s, m, inch, ...], example 1 ... 5 m Input field 1 and input field 2: max. 5 characters and numbers only; decimal places as dot (comma is automatically converted to dot). Drop-down list: m, cm, mm, in, ft, m^3, l, hl, in^3, ft^3, yd^3, gal, gal (UK), bu, bbl, bbl (US), SCF, Nm^3, Nl.	**Y22**
Local display Scaling with user-specific units (max. 12 characters), example 1 ... 5 m Input field 1 and input field 2: max. 5 characters and numbers only; decimal places as dot (comma is automatically converted to dot). Input field 3: Free text, max. 8 characters	**Y23**
Saturation limits instead of 3.8 ... 20.5 mA, example: 3.8 ... 22.0 mA Drop-down list 1: 3.9, 4 Drop-down list 2: 20.8, 22	**Y30**
Fault current instead of 3.6 mA [22.5 mA, 22.8 mA] Drop-down list: 3.75; 21.75; 22.5; 22.6	**Y31**
Damping in seconds instead of 2 s (0.0 ... 100.0 s) Input field: max. 4 characters and numbers only; decimal places as dot (comma is automatically converted to dot); min. value = 0; max. value = 100.	**Y32**
ID number of special version Input field: max. 4 characters and only natural numbers from 0 … 9999	**Y99**

© Siemens 2020

Dimensional drawings

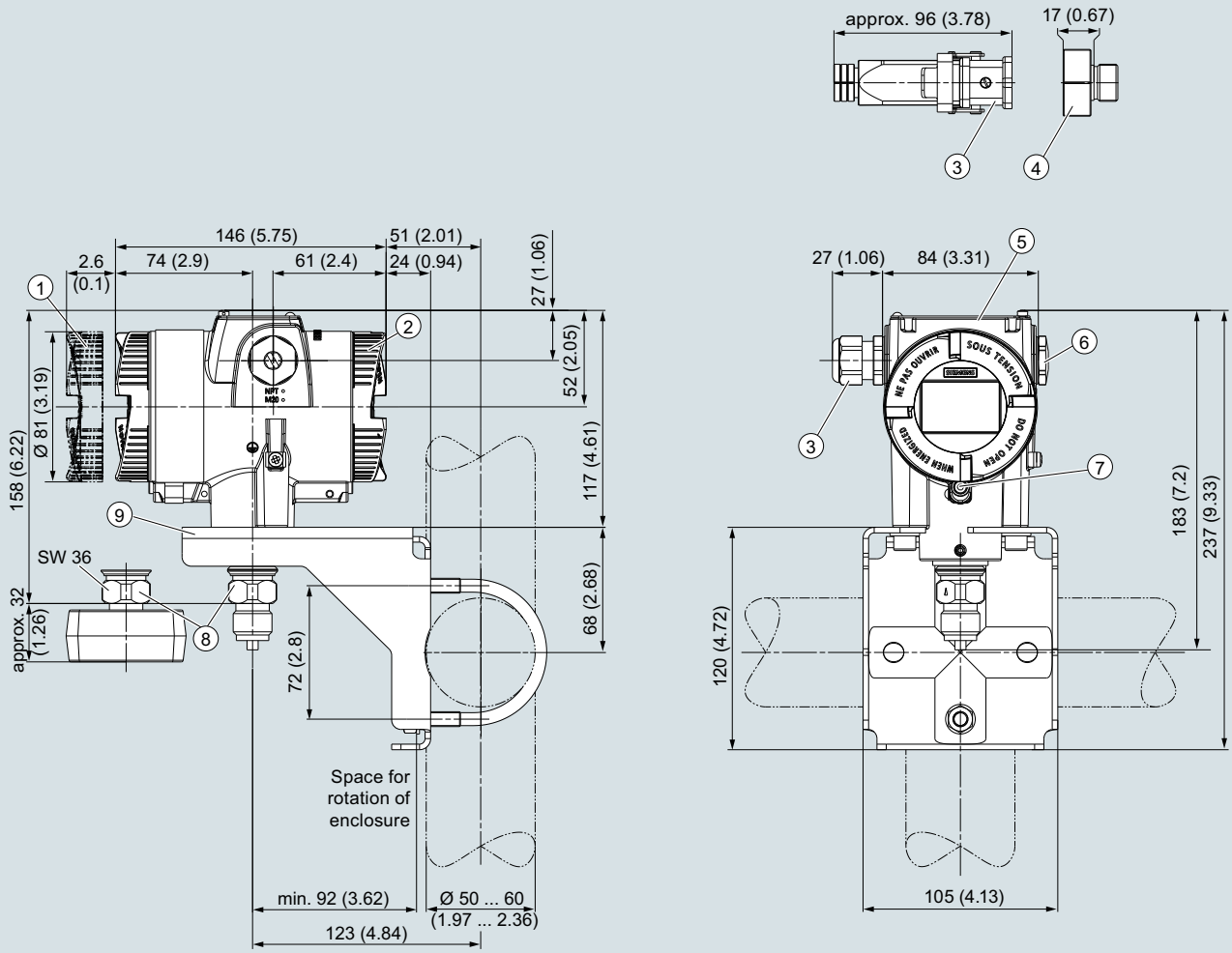

1. Electronics side, local display (longer overall length for cover with glass pane)[1]
2. Connection side
3. Electrical connection:
   - M20 x 1,5[3] screw gland
   - ½-14 NPT screw gland
   - Han 7D/Han 8D[2,3] device plug
   - M12 device plug[2,3]
4. Harting adapter
5. Cover over buttons and nameplate with general information
6. Blanking plug
7. Safety catch (only for "flameproof enclosure" type of protection)
8. Process connection: G½B connection pin or oval flange
9. Mounting bracket (optional)

1) In addition, allow approx. 22 mm (0.87 inch) for the thread length when removing the covers
2) Not with "flameproof enclosure" type of protection
3) Not with type of protection "FM + CSA" [is + XP]"

SITRANS P320/P420 pressure transmitter for gauge pressure (pressure series), dimensions in mm (inch)

© Siemens 2020

Technical specifications

SITRANS P320 / SITRANS P420 for gauge pressure (differential pressure series)			
Input			
Measured variable	Gauge pressure		
Measuring span (infinitely adjustable) or measuring range and maximum operating pressure (pursuant to Pressure Equipment Directive 2014/68/EU)	Measuring span	Max. permissible operating pressure MAWP (PS)	Maximum permissible test pressure
	1 ... 20 mbar	160 bar	240 bar
	0.1 ... 2 kPa	16 MPa	24 MPa
	0.4019 … 8.037 inH_2O	2320 psi	3481 psi
	1 ... 60 mbar	160 bar	240 bar
	0.1 ... 6 kPa	16 MPa	24 MPa
	0.4019 … 24.11 inH_2O	2320 psi	3481 psi
	2.5 ... 250 mbar	160 bar	240 bar
	0.2 ... 25 kPa	16 MPa	24 MPa
	1.005 … 100.5 inH_2O	2320 psi	3481 psi
	6 ... 600 mbar	160 bar	240 bar
	0.6 ... 60 kPa	16 MPa	24 MPa
	2.41 … 241.1 inH_2O	2320 psi	3481 psi
	16 ... 1600 mbar	160 bar	240 bar
	1.6 ... 160 kPa	16 MPa	24 MPa
	6.43 … 643 inH_2O	2320 psi	3481 psi
	50 ... 5000 mbar	160 bar	240 bar
	5 ... 500 kPa	16 MPa	24 MPa
	20.09 … 2009 inH_2O	2320 psi	3481 psi
	0.3 ... 30 bar	160 bar	240 bar
	0.03 ... 3 MPa	16 MPa	24 MPa
	4.35 … 435 psi	2320 psi	3481 psi
	5 ... 100 bar	160 bar	240 bar
	0.5 ... 10 MPa	16 MPa	24 MPa
	76.9 … 1450 psi	2320 psi	3481 psi
Measuring limits			
• Low measuring limit			
- Measuring cell with silicone oil filling	30 mbar a/3 kPa a/0.44 psi a		
- Measuring cell with inert oil	30 mbar a/3 kPa a/0.44 psi a		
- Measuring cell with FDA-compliant oil	100 mbar a/10 kPa a/1.45 psi a		
• Upper measuring limit	100% of the max. measuring span (for oxygen measurement max. 100 bar/10 MPa/ 1450 psi and 60 °C (140 °F) ambient temperature/temperature of medium)		
• Lower range value	Between the measuring limits (infinitely adjustable)		
Output	**HART**		
Output signal	4 ... 20 mA		
• Low saturation limit (infinitely adjustable)	3.55 mA, factory preset to 3.8 mA		
• High saturation limit (infinitely adjustable)	22.8 mA, factory-set to 20.5 mA or optionally 22.0 mA		
• Ripple (without HART communication)	$I_{pp} \leq 0.5\%$ of max. output current		
Adjustable damping	0 … 100 s, continuously adjustable over remote operation		
	0 … 100 s, in increments of 0.1 s, adjustable over display		
• Current transmitter	3.55 … 22.8 mA		
• Failure signal	3.55 … 22.8 mA		
Load	Resistor R [Ω]		
• Without HART communication	R = (U_H - 10.5 V)/22.8 mA, U_H: Power supply in V		
• With HART communication	R = 230 … 1100 Ω (HART communicator (handheld))		
	R = 230 … 500 Ω (SIMATIC PDM)		
Characteristic curve	• Linearly increasing or linearly decreasing • Linear increase or decrease or according to the square root (only for differential pressure and flow)		
Physical bus	-		
Polarity-independent	-		

© Siemens 2020

SITRANS P320 / SITRANS P420 for gauge pressure (differential pressure series)		
Measuring accuracy		
Reference conditions	• According to EN 60770-1 • Rising characteristic curve • Lower range value 0 bar/kPa/psi	• Seal diaphragm stainless steel • Measuring cell with silicone oil filling • Room temperature 25 °C (77 °F)
Conformity error at limit point setting, including hysteresis and repeatability		
Measuring span ratio r (spread, Turn-Down)	r = max. measuring span/set measuring span and nominal measuring range	
• Linear characteristic		
- 20 mbar/2 kPa/8.031 inH_2O	r ≤ 5: 5 < r ≤ 20:	≤ 0.075% ≤ (0.005 · r + 0.05)%
- 60 mbar/6 kPa/24.09 inH_2O	r ≤ 5: 5 < r ≤ 60:	≤ 0.075% ≤ (0.005 · r + 0.05)%
- 250 mbar/25 kPa/3.6 psi 600 mbar/60 kPa/240.9 inH_2O 1600 mbar/160 kPa/642.4 inH_2O 5000 mbar/500 kPa/2008 inH_2O 30 bar/3 MPa/435 psi	r ≤ 5: 5 < r ≤ 100:	≤ 0.065% (SITRANS P320) ≤ 0.04% (SITRANS P420) ≤ (0.004 · r + 0.045) %
• 100 bar/10 MPa/1450 psi	r < 10: 10 < r < 30:	= 0.1% = 0.2%
Influence of ambient temperature as % per 28 °C (50 °F))		
• 20 mbar/2 kPa/8.031 inH_2O	≤ (0.15 · r + 0.1)%	
• 60 mbar/6 kPa/24.09 inH_2O	≤ (0.075 · r + 0.1)%	
• 250 mbar/25 kPa/3.6 psi 600 mbar/60 kPa/240.9 inH_2O 1600 mbar/160 kPa/642.4 inH_2O 5000 mbar/500 kPa/2008 inH_2O 30 bar/3 MPa/435 psi	≤ (0.025 · r + 0.125)% (SITRANS P320)	
• 250 mbar/25 kPa/3.6 psi 5000 mbar/500 kPa/2008 inH_2O	≤ (0.025 · r + 0.0625)% (SITRANS P420)	
• 600 mbar/60 kPa/240.9 inH_2O 1600 mbar/160 kPa/642.4 inH_2O 30 bar/3 MPa/435 psi	≤ (0.0125 · r + 0.0625)% (SITRANS P420)	
• 100 bar/10 MPa/1450 psi	0.08 · r + 0.16%	
Long-term stability at ±30 °C (±54 °F))		
• 20 mbar/2 kPa/8.031 inH_2O	≤ (0.2 · r)% per year	
• 60 mbar/6 kPa/24.09 inH_2O	In 5 years ≤ (0.25 · r)%	
• 250 mbar/25 kPa/3.6 psi 600 mbar/60 kPa/240.9 inH_2O 1600 mbar/160 kPa/642.4 inH_2O 5000 mbar/500 kPa/2008 inH_2O	In 5 years ≤ (0.125 · r)% In 10 years ≤ (0.15 · r)%	
• 30 bar/3 MPa/435 psi	In 5 years ≤ (0.25 · r)% In 10 years ≤ (0.35 · r)%	
• 100 bar/10 MPa/1450 psi	In 5 years ≤ (0.25 · r)%	
Step response time T_{63} (without electrical damping)		
• 20 mbar/2 kPa/8.031 inH_2O	Approx. 0.160 s	
• 60 mbar/6 kPa/24.09 inH_2O	Approx. 0.150 s	
• 250 mbar/25 kPa/3.6 psi 600 mbar/60 kPa/240.9 inH_2O 1600 mbar/160 kPa/642.4 inH_2O 5000 mbar/500 kPa/2008 inH_2O 30 bar/3 MPa/435 psi	Approx. 0.135 s	
• 100 bar/10 MPa/1450 psi	Approx. 0.145 s	
Effect of mounting position (in pressure per change of angle)	≤ 0.7 mbar/0.07 kPa/0.010 psi per 10° incline (zero offset is possible with position error compensation)	
Effect of auxiliary power (in % per voltage change)	0.005% per 1 V	
Operating conditions		
Temperature of medium		
• Measuring cell with silicone oil filling	-40 … +100 °C (-40 … +212 °F)	
- Measuring cell 30 bar (435 psi)	-20 … +100 °C (-4 … +212 °F)	
- Measuring cell 100 bar (1450 psi)	-20 … +100 °C (-4 … +212 °F)	
• Measuring cell with inert oil	-20 … +100 °C (-4 … +212 °F)	
• In conjunction with dust explosion protection	-40 … +85 °C (-4 … +185 °F)	
Ambient conditions		
• Ambient temperature/enclosure	Observe the temperature class in areas subject to explosion hazard.	
- Measuring cell with silicone oil filling	-40 ... +85 °C (-40 ... +185 °F)	
- Measuring cell with inert oil	-40 … +85 °C (-40 … +185 °F)	
- Display	-20 … +80 °C (-4 … +176 °F)	
• Storage temperature	-50 ... +85 °C (-58 ... +185 °F)	
• Climatic class in accordance with IEC 60721-3-4	4K4H	
• Degree of protection		
- According to IEC 60529	IP66, IP68	
- According to NEMA 250	Type 4X	
• Electromagnetic compatibility		
- Emitted interference and interference immunity	According to IEC 61326 and NAMUR NE 21	

© Siemens 2020

SITRANS P320 / SITRANS P420 for gauge pressure (differential pressure series)	
Design	
Weight	Approx. 3.9 kg (8.5 lb) with aluminum enclosure Approx. 5.8 kg (12.7 lb) with stainless steel enclosure
Material	
• Wetted parts materials	
- Seal diaphragm	Stainless steel, mat. no. 1.4404/316L, Alloy C276, mat. no. 2.4819, Monel, mat. no. 2.4360, tantalum or gold
- Process flanges and sealing plugs	Stainless steel, mat. no. 1.4408 to PN 160, mat. no. 1.4571/316Ti for PN 420, Alloy C22, 2.4602 or Monel, mat. no. 2.4360
- O-ring	FPM (Viton) or optionally: PTFE, FEP, FEPM and NBR
• Non-wetted parts materials	
- Electronics enclosure	• Low-copper die-cast aluminum GD-AlSi 12 or stainless steel precision casting, mat. no. 1.4409/ CF-3M • Standard: Powder coating with polyurethane Option: 2 coats: Coat 1: epoxy-based; coat 2: Polyurethane • Stainless steel type plate (1.4404/316L)
- Pressure flange screws	Stainless steel ISO 3506-1 A4-70
- Mounting bracket	Steel, electrogalvanized steel, or stainless steel
Process connection	¼-18 NPT female thread and flat connection with 7/16-20 UNF fastening screw thread in accordance with EN 61518 or M10 fastening screw thread in accordance with DIN 19213 (M12 for PN 420 (MWP 6092 psi))
Electrical connection	Screw terminals Cable entry via the following screwed glands: • M20 x 1.5 • ½-14 NPT • Device plug Han 7D/Han 8D[1)] • Device plug M12
Displays and controls	
Keys	4 keys for operation directly on the device
Display	• With or without integrated display (optional) • Cover with inspection window (optional)
Auxiliary power U_H	
Terminal voltage on pressure transmitter	10.5 ... 45 V DC 10.5 ... 30 V DC in intrinsically safe mode
Ripple	$U_{SS} \leq 0.2$ V (47 … 125 Hz)
Noise	$U_{eff} \leq 1.2$ mV (0.5 … 10 kHz)
Auxiliary power	–
Separate supply voltage	–
Certificates and approvals	
Classification according to pressure equipment directive (PED 2014/68/EU)	For gases of fluid group 1 and liquids of fluid group 1; complies with requirements of article 4, paragraph 3 (sound engineering practice)
Drinking water	
• WRAS (England)	No.: 1903094 (option E83)
• ACS (France)	No.: 18 ACC LY 277 (option E85)
• NSF (USA)	No.: 20180920-MH61350 (option E84)
CRN (Canada)	No.: 0F9863.5C (option E60)
Explosion protection acc. to NEPSI (China)	No.: GYJ19.1058X (option E27)
Explosion protection acc. to INMETRO (Brazil)	No.: BRA-18-GE-0035X (option E25)
Explosion protection	
• Intrinsic safety "i"	
- Marking	II 1/2 G Ex ia/ib IIC T4/T6 Ga/Gb
- Permissible ambient temperature	-40 ... +80 °C (-40 ... +176 °F) temperature class T4 -40 ... +70 °C (-40 ... +158 °F) temperature class T6
- Permissible temperature of measuring medium	-40 ... +100 °C (-40 ... +212 °F) temperature class T4 -40 ... +70 °C (-40 ... +158 °F) temperature class T6
- Connection	To certified intrinsically safe circuits with the peak values: U_i = 30 V, I_i = 101 mA, P_i = 760 mW U_i = 29 V, I_i = 110 mA, P_i = 800 mW
- Effective internal inductance/capacitance	L_i = 0.24 µH/C_i = 3.29 nF
• Flameproof enclosure "d"	
- Marking	Ex II 1/2 G Ex ia/db IIC T4/T6 Ga/Gb
- Permissible ambient temperature	-40 ... +80 °C (-40 ... +176 °F) temperature class T4 -40 ... +70 °C (-40 ... +158 °F) temperature class T6
- Permissible temperature of measuring medium	-40 ... +100 °C (-40 ... +212 °F) temperature class T4 -40 ... +70 °C (-40 ... +158 °F) temperature class T6
- Connection	To a circuit with the operating values: U_n = 10.5 to 45 V, 4 ... 20 mA

© Siemens 2020

SITRANS P320 / SITRANS P420 for gauge pressure (differential pressure series)	
• Dust explosion protection for zones 21, 22	
- Marking	Ex II 2D Ex tb IIIC T120 °C Db Ex II 3D Ex tc IIIC T120 °C Dc
- Permissible ambient temperature	-40 ... +80 °C (-40 ... +176 °F)
- Permissible temperature of measuring medium	-40 ... +100 °C (-40 ... +212 °F)
- Max. surface temperature	120 °C (248 °F)
- Connection	To a circuit with the operating values: U_n = 10.5 to 45 V, 4 ... 20 mA
• Dust explosion protection for zones 20, 21, 22	
- Marking	Ex II 1D Ex ia IIIC T120 °C Da Ex II 2D Ex ib IIIC T120 °C Db
- Permissible ambient temperature	-40 ... +80 °C (-40 ... +176 °F)
- Permissible temperature of measuring medium	-40 ... +100 °C (-40 ... +212 °F)
- Connection	To certified intrinsically safe circuits with the peak values: U_i = 30 V, I_i = 101 mA, P_i = 760 mW U_i = 29 V, I_i = 110 mA, P_i = 800 mW
- Effective internal inductance/capacitance	L_i = 0.24 µH/C_i = 3.29 nF
• Type of protection for Zone 2	
- Marking	Ex II 3G Ex ec IIC T4/T6 Gc
- Permissible ambient temperature "ec"	-40 ... +80 °C (-40 ... +176 °F) temperature class T4 -40 ... +40 °C (-40 ... +104 °F) temperature class T6
- Permissible temperature of measuring medium	-40 ... +100 °C (-40 ... +212 °F) temperature class T4 -40 ... +70 °C (-40 ... +158 °F) temperature class T6
- "ec" connection	To a circuit with the operating values: U_n = 10.5 to 30 V, 4 ... 20 mA
• Explosion protection acc. to FM	Available soon
- Marking (XP/DIP) or IS; NI; S	CL I, DIV 1, GP ABCD T4 ... T6; CL II, DIV 1, GP EFG; CL III; Ex ia IIC T4 ... T6: CL I, DIV 2, GP ABCD T4 ... T6; CL II, DIV 2, GP FG; CL III
• Explosion protection according to CSA	Available soon
- Marking (XP/DIP) or (IS)	CL I, DIV 1, GP ABCD T4 ... T6; CL II, DIV 1, GP EFG; CL III; Ex ia IIC T4 ... T6: CL I, DIV 2, GP ABCD T4 ... T6; CL II, DIV 2, GP FG; CL III
NAMUR recommendations	
• NE 06	Standardized Electrical Signals and Questions Relating to Engineering Technology
• NE 21	Electromagnetic Compatibility (EMC) of Industrial Process and Laboratory Control Equipment
• NE 23	Extra Low Voltage Circuits with Safe Separation
• NE 43	Standardization of the Signal Level for the Failure Information of Digital Transmitters
• NE 53	Software and Hardware of Field Devices and Signal Processing Devices with Digital Electronics
• NE 80	The Application of the Pressure Equipment Directive to Process Control Devices
• NE 105	Specifications for Integrating Fieldbus Devices in Engineering Tools for Field Devices
• NE 107	Self-Monitoring and Diagnosis of Field Devices
• NE 131	NAMUR Standard Device - Field Devices for Standard Applications

[1] Han 8D is identical to Han 8U.

HART communication	
HART	230 ... 1100 Ω
Protocol	HART 7
Software for computer	SIMATIC PDM

© Siemens 2020

Selection and ordering data

	Article No.
Pressure transmitters for gauge pressure (differential pressure series)	
SITRANS P320 ↗	**7MF031 ■ - ■■■■■ - ■■■■**
SITRANS P420 ↗	**7MF041 ■ - ■■■■■ - ■■■■**
↗ Click on the Article no. for the online configuration in the PIA Life Cycle Portal.	
Communication	
HART, 4 ... 20 mA	**0**
Measuring cell filling	
Silicone oil	**1**
Inert filling liquid	**3**
Maximum measuring span	
20 mbar (8.037 inH_2O)	**B**
60 mbar (24.11 inH_2O)	**D**
250 mbar (1005 inH_2O)	**G**
600 mbar (241.1 inH_2O)	**H**
1 600 mbar (643 inH_2O)	**M**
5000 mbar (2009 inH_2O)	**P**
30 bar (435 psi)	**R**
Process connection	
Oval flange, mounting thread: $^7/_{16}$-20 UNF (IEC 61518)	**L**
Oval flange, mounting thread: M10 (PN 160), (DIN 19213)	**M**
Oval flange, mounting thread: $^7/_{16}$-20 UNF (IEC 61518) with lateral ventilation	**N**
Oval flange, mounting thread: M10 (PN 160) (DIN 19213) with lateral ventilation	**P**
Wetted parts materials: Process connection, seal diaphragm	
Stainless steel 316L/1.4404, stainless steel 316L/1.4404, process flange stainless steel 316/1.4408	**0**
Stainless steel 316L/1.4404, alloy C276/2.4819, process flange stainless steel 316/1.4408	**1**
Alloy C22/2.4602, alloy C276/2.4819, process flange stainless steel 316/1.4408	**2**
Tantalum/tantalum, process flange stainless steel 316/1.4408 (not in combination with maximum measuring span 20 mbar (0.29 psi) and 60 mbar (0.87 psi))	**4**
Monel 00/2.4360, Monel 400/2.4360, process flange stainless steel 316/1.4408 (not in combination with maximum measuring span 20 mbar (0.29 psi) and 60 mbar (0.87 psi))	**6**
Stainless steel 316L/1.4404, gold-plated, process flange stainless steel 316/1.4408 (not in combination with maximum measuring span 20 mbar (0.29 psi) and 60 mbar (0.87 psi))	**8**
Non-wetted parts materials	
Die-cast aluminum	**1**
Stainless steel precision casting CF3M/1.4409 similar to 316L	**2**
Enclosure	
Dual chamber device	**5**
Type of protection	
Without Ex	**A**
Intrinsic safety	**B**
Flameproof enclosure	**C**
Flameproof enclosure, intrinsic safety	**D**
Dust protection by enclosure Zone 21/22 (DIP), increased safety Zone 2	**L**
Dust protection by enclosure Zone 20/21/22 (DIP), increased safety Zone 2	**M**
Combination of options B, C and L (zone model)	**S**
Combination of options B, C and M (zone model, Class Division)	**T**
Electrical connections/cable entries	
Thread for cable gland: Cable gland must be ordered separately as option (Axx)	
• 2 x M20 x 1.5	**F**
• 2 x ½-14 NPT	**M**
Local operation/display	
Without display (cover closed)	**0**
With display (cover closed)	**1**
With display (cover with glass pane)	**2**

© Siemens 2020

Selection and ordering data

Options	Order code
Append "-**Z**" to Article No., add order code and plain text or entry from drop-down list.	
Cable glands included	
Plastic	**A00**
Metal	**A01**
Stainless steel	**A02**
Stainless steel 316L/1.4404	**A03**
CMP, for XP devices	**A10**
CAPRI ADE 4F, CuZn, cable inner diameter 7 ... 12 mm, cable outer diameter 10 ... 16 mm	**A11**
CAPRI ADE 4F, stainless steel, cable inner diameter 7 ... 12 mm, cable outer diameter 10 ... 16 mm	**A12**
Device plug Han mounted left	
Device plug Han 7D (plastic, straight)	**A30**
Device plug Han 7D (plastic, angled)	**A31**
Device plug Han 7D (metal, straight)	**A32**
Device plug Han 7D (metal, angled)	**A33**
Device plug Han 8D (plastic, straight)	**A34**
Device plug Han 8D (plastic, angled)	**A35**
Device plug Han 8D (metal, straight)	**A36**
Device plug Han 8D (metal, angled)	**A37**
Cable socket included	
Plastic, for device plug Han 7D and Han 8D	**A40**
Metal, for device plug Han 7D and Han 8D	**A41**
Device plug M12 mounted left	
Stainless steel, without cable socket	**A62**
Stainless steel, with cable socket	**A63**
Cable entry/connector mounting	
2x sealing plugs M20 x 1.5, IP66/68 installed on both sides	**A90**
2x sealing plugs ½-14 NPT, IP66/68 installed on both sides	**A91**
Cable gland/connector mounted left	**A97**
Cable gland/connector mounted on right	**A99**
Nameplate labeling (standard labeling: English, unit bar)	
German (bar)	**B11**
French (bar)	**B12**
Spanish (bar)	**B13**
Italian (bar)	**B14**
Chinese (bar)	**B15**
Russian (bar)	**B16**
English (psi)	**B20**
English (Pa)	**B30**
Chinese (Pa)	**B35**
Certificates	
Quality test certificate, 5-point factory calibration (IEC 60770-2)	**C11**
Inspection certificate (EN 10204-3.1) - Material of pressurized and wetted parts	**C12**
Factory certificate - NACE (MR 0103-2012 and MR 0175-2009))	**C13**
Factory certificate (EN 10204-2.2) - Wetted parts	**C14**
Inspection certificate (EN 10204-3.1) - PMI test of pressurized and wetted parts	**C15**
Certificates for functional safety	
Functional safety (IEC 61508) - SIL2/3	**C20**

Options	Order code
Append "-**Z**" to Article No., add order code and plain text or entry from drop-down list.	
Device options	
PDF file with device settings	**D10**
Double layer coating (epoxy resin and polyurethane) 120 µm of enclosure and cover	**D20**
FVMQ enclosure sealing	**D21**
IP66/IP68 degree of protection (not for device plugs M12 and Han)	**D30**
TAG label empty	**D40**
Without labeling of the measuring range on the TAG label	**D41**
Stainless steel Ex plate 1.4404/316L	**D42**
Overvoltage protection up to 6 kV (external)	**D71**
Adhesive labels on transport packaging (supplied by customer)	**D90**
General approval without Ex approval	
Worldwide (CE, RCM) except EAC, FM, CSA, KCC	**E00**
Worldwide (CE, RCM, EAC, FM, CSA, KCC)	**E01**
CSA (USA and Canada)	**E06**
EAC	**E07**
FM	**E08**
KCC	**E09**
Export approval CPA (China)	**E12**
Explosion protection approvals	
ATEX (Europe)	**E20**
CSA (USA and Canada)	**E21**
FM (USA and Canada)	**E22**
IECEx (Worldwide)	**E23**
EACEx (GOST-R, -K, -B)	**E24**
INMETRO (Brazil)	**E25**
KCs (Korea)	**E26**
NEPSI (China)	**E27**
PESO (India)	**E28**
UKR Sepro (Ukraine)	**E30**
ATEX (Europe) and IECEx (Worldwide)	**E47**
CSA (Canada) and FM (USA)	**E48**
ATEX (Europe) and IECEx (Worldwide) + CSA (Canada) and FM (USA)	**E49**
Marine approvals	
DNV-GL (Det Norske Veritas/Germanischer Lloyd)	**E50**
LR (Lloyds Register)	**E51**
BV (Bureau Veritas)	**E52**
ABS (American Bureau of Shipping)	**E53**
RMR (Russian Maritime Register)	**E55**
KR (Korean Register of Shipping)	**E56**
RINA (Registro Italiano Navale)	**E57**
CCS (China Classification Society)	**E58**
Country-specific approvals	
CRN approval Canada (Canadian Registration Number)	**E60**

© Siemens 2020

Options	Order code
Append "-**Z**" to Article No., add order code and plain text or entry from drop-down list.	
Special approvals	
Oxygen application (with inert liquid, max. 100 bar (1 450 psi) at 60° C (140 °F))	**E80**
Dual seal	**E81**
WRC / WRAS (drinking water); only with pressure cap O-rings made of EPDM	**E83**
NSF61 (drinking water)	**E84**
ACS (drinking water)	**E85**
Mounting bracket	
Steel, galvanized	**H01**
Stainless steel 1.4301/304	**H02**
Stainless steel 1.4404/316L	**H03**
Process flanges; screw plug with vent valve	
Welded in on right	**J08**
Welded in on left	**J09**
Glued in on right	**J10**
Glued in on left	**J11**
Flange connections with flange EN 1092-1	
Form B1	
• DN 25 PN 40, stainless steel 1.4571/316Ti	**J70**
• DN 50 PN 40, stainless steel 1.4571/316Ti	**J71**
• DN 80 PN 40, stainless steel 1.4571/316Ti	**J72**
• DN 15 PN 40, stainless steel 1.4571/316Ti	**J78**
Form C	
• DN 25 PN 40, stainless steel 1.4571/316Ti	**J73**
• DN 50 PN 40, stainless steel 1.4571/316Ti	**J74**
• DN 80 PN 40, stainless steel 1.4571/316Ti	**J75**
Flange connection options	
Flange connection and temperature extension	**J76**
Flange connection with epoxy resin coating	**J77**
Process flanges; special materials	
Reserved for 7MF7: without process flanges, without screws, without gaskets	**K00**
Process flange material alloy C22/2.4602	**K01**
Process flange material Monel 400/2.4360	**K02**
Process connection material PVDF, on the side ½-14 NPT	**K05**
Process flanges/process connection material PVDF, flange on the side EN 1092-1 Form B1 DN 25 PN 40, MAWP 4 bar	**K06**
Process flanges/process connection material PVDF, flange on the side EN 1092-1 Form B1 DN 40 PN 40, MAWP 4 bar	**K07**
Process flanges; process connection option	
Process flange with process connection G½ welded on	**K20**
Process connection NAM (ASTAVA)	**K21**
Process flanges chambered with gaskets	
1x chambered, graphite	**K40**
1x chambered, PTFE	**K41**
2x chambered, PTFE	**K42**
Process flanges, gaskets (instead of standard gaskets FKM (FPM))	
O-ring, process flanges, PTFE	**K50**
O-ring, process flanges, FEP (with silicone core, approved for food)	**K51**
O-ring, process flanges, FFKM (FFPM)	**K52**
O-ring, process flanges, NBR	**K53**
O-ring, process flanges, EPDM	**K54**

Options	Order code
Append "-**Z**" to Article No., add order code and plain text or entry from drop-down list.	
Process flange options	
Process flanges for vertical differential pressure lines (half process flange)	**K81**
Process flanges (+) - side front	**K82**
Process flange screws, process flange nuts, material Monel 400/2.4360	**K83**
Valve ¼-18 NPT, material same as process flanges	**K84**
Valve mounted on the side, measured medium: Gas	**K85**
Oval flange enclosed, gasket PTFE + mounting screws	**K86**
Valve manifolds	
With mounted valve manifold (3-way) 7MF9411-5BA, PTFE sealing rings, chrome-plated steel screws and pressure test certified in factory certificate (EN 10204-2.2)	**U01**
With mounted valve manifold (3-way) 7MF9411-5BA, PTFE sealing rings, stainless steel screws and pressure test certified in factory certificate (EN 10204-2.2)	**U02**
With mounted valve manifold (5-way) 7MF9411-5CA, PTFE sealing rings, chrome-plated steel screws and pressure test certified in factory certificate (EN 10204-2.2)	**U03**
With mounted valve manifold (5-way) 7MF9411-5CA, PTFE sealing rings, stainless steel screws and pressure test certified in factory certificate (EN 10204-2.2)	**U04**

© Siemens 2020

Options	Order code
Append "-**Z**" to Article No., add order code and plain text or entry from drop-down list.	
Device settings	
Measuring span Lower range value (max. 5 characters), upper range value (max. 5 characters), unit [mbar, bar, kPa, MPa, psi, ...], example: -0.5 ... 10.5 psi Input field 1 and input field 2: max. 5 characters and numbers only; decimal places as dot (comma is automatically converted to dot). Drop-down list: Pa, MPa, kPa, hPa, bar, mbar, psi, g/cm^2, kg/cm^2, kgf/cm^2, inH$_2$O, inH$_2$O (4°C), ftH$_2$O, mmH$_2$O, mmH$_2$O (4°C), mH$_2$O (4°C), mmHg, inHg, atm, torr	**Y01**
TAG (on stainless steel plate and device parameters, max. 32 characters) Input field: Free text, max. 32 characters	**Y15**
Measuring point description (on stainless steel plate and device parameters, max. 32 characters) Input field: Free text, max. 32 characters	**Y16**
TAG short (device parameters, max. 8 characters) Input field: Free text, max. 8 characters	**Y17**
Local display [Pressure, Percent], reference [None, Absolute, Relative], example: Pressure gauge Drop-down list: Percent, pressure unit, pressure unit abs., pressure unit gauge	**Y21**
Local display Scaling with standard units [m^3/s, l/s, m, inch, ...], example 1 ... 5 m Input field 1 and input field 2: max. 5 characters and numbers only; decimal places as dot (comma is automatically converted to dot). Drop-down list: m, cm, mm, in, ft, m^3, l, hl, in^3, ft^3, yd^3, gal, gal (UK), bu, bbl, bbl (US), SCF, Nm^3, Nl.	**Y22**
Local display Scaling with user-specific units (max. 12 characters), example 1 ... 5 m Input field 1 and input field 2: max. 5 characters and numbers only; decimal places as dot (comma is automatically converted to dot). Input field 3: Free text, max. 8 characters	**Y23**
Saturation limits instead of 3.8 ... 20.5 mA, example: 3.8 ... 22.0 mA Drop-down list 1: 3.9, 4 Drop-down list 2: 20.8, 22	**Y30**
Fault current instead of 3.6 mA [22.5 mA, 22.8 mA] Drop-down list: 3.75; 21.75; 22.5; 22.6	**Y31**
Damping in seconds instead of 2 s (0.0 ... 100.0 s) Input field: max. 4 characters and numbers only; decimal places as dot (comma is automatically converted to dot); min. value = 0; max. value = 100.	**Y32**
ID number of special version Input field: max. 4 characters and only natural numbers from 0 … 9999	**Y99**

© Siemens 2020

Dimensional drawings

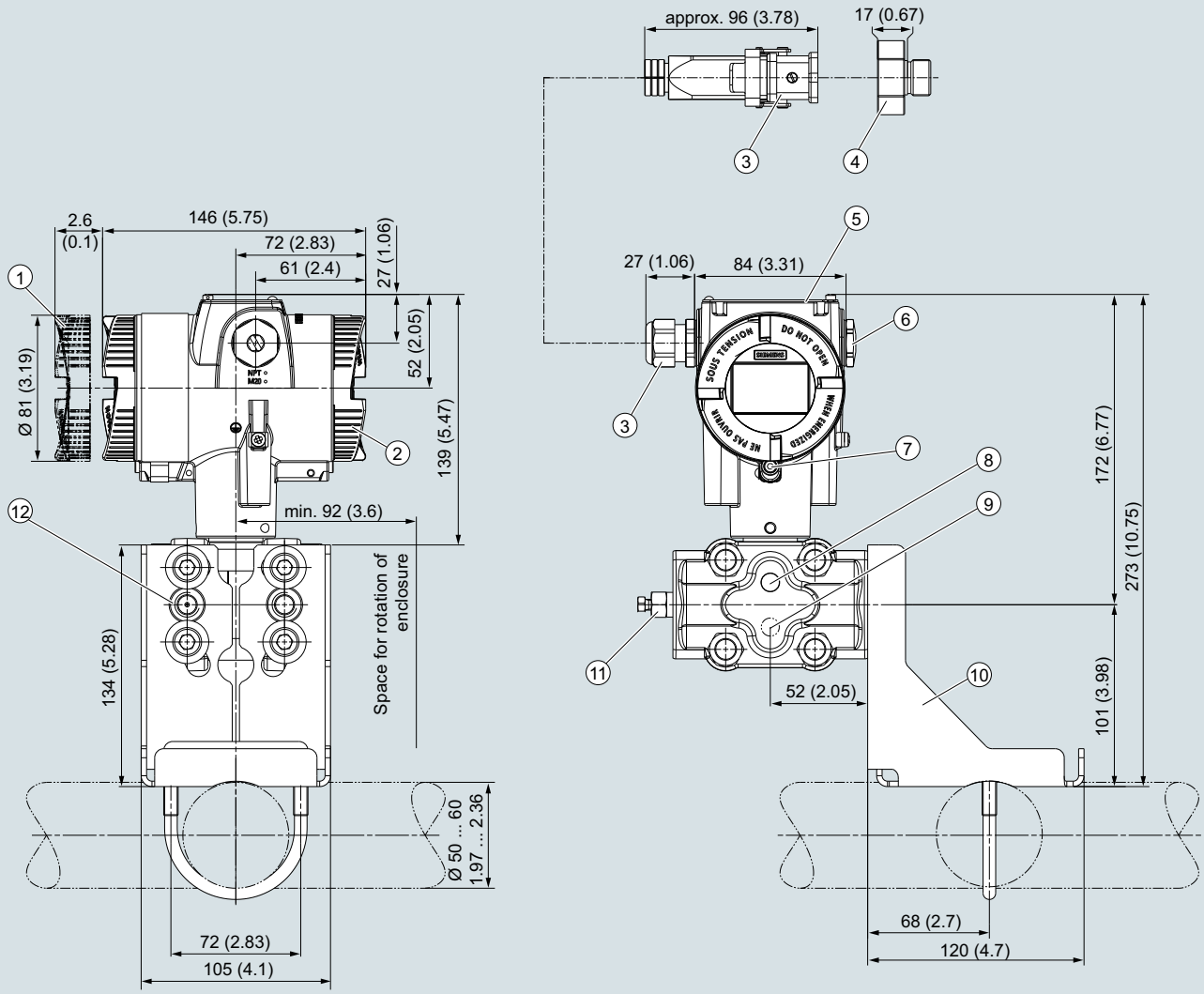

1. Electronics side, local display (longer overall length for cover with glass pane)[1]
2. Connection side
3. Electrical connection:
   - M20 x 1,5[3] screw gland
   - ½-14 NPT screw gland
   - Han 7D/Han 8D[2] [3] device plug
   - M12 device plug[2] [3]
4. Harting adapter
5. Cover over buttons and nameplate with general information
6. Blanking plug
7. Safety catch (only for "flameproof enclosure" type of protection)
8. Lateral ventilation for liquid measurement (Standard)
9. Lateral ventilation for gas measurement (order option K85)
10. Mounting bracket (optional)
11. Sealing plug with valve (optional)
12. Process connection: ¼-18 NPT (IEC 61518)

[1] In addition, allow approx. 22 mm (0.87 inch) for the thread length when removing the covers
[2] Not with "flameproof enclosure" type of protection
[3] Not with type of protection "FM + CSA" [is + XP]"

SITRANS P320/P420 pressure transmitter for relative pressure (differential pressure series), dimensions in mm (inch)

© Siemens 2020

Technical specifications

SITRANS P320 / SITRANS P420 for gauge and absolute pressure, with flush-mounted diaphragm			
Input of gauge pressure, with flush-mounted diaphragm			
Measured variable	Gauge pressure		
Measuring span (infinitely adjustable) or measuring range, max. operating pressure and max. test pressure	Measuring span	Max. permissible operating pressure MAWP (PS)	Maximum permissible test pressure
	0.01 ... 1 bar 1 ... 100 kPa 0.15 … 14.5 psi	Refer to the information on the nameplate of the pressure transmitter and the data on the mounting flange[1)]	
	0.04 ... 4 bar 4 ... 400 kPa 0.58 … 58 psi		
	0.16 ... 16 bar 0.016 ... 1.6 MPa 2.3 … 232 psi		
	0.6 ... 63 bar 0.063 ... 6.3 MPa 9.1 … 914 psi		
Measuring limits			
• Low measuring limit			
- Measuring cell with silicone oil filling	100 mbar a/10 kPa a/1.45 psi a		
- Measuring cell with inert oil	100 mbar a/10 kPa a/1.45 psi a		
- Measuring cell with FDA-compliant oil	100 mbar a/10 kPa a/1.45 psi a		
• Upper measuring limit	100% of max. measuring span		
Input of absolute pressure, with flush-mounted diaphragm			
Measured variable	Absolute pressure		
Measuring span (infinitely adjustable) or measuring range, max. operating pressure and max. test pressure	Measuring span	Max. permissible operating pressure MAWP (PS)	Maximum permissible test pressure
	43 … 1300 mbar a 4.3 ... 130 kPa a 17 … 525 inH_2O a	Refer to the information on the nameplate of the pressure transmitter and the data on the mounting flange[1)]	
	166 … 5000 mbar a 16.6 ... 500 kPa a 2.41 … 72.5 psi a		
	1 … 30 bar a 0.1 ... 3 MPa a 14.5 … 435 psi a		
	Depending on the process connection, the measuring span may differ from these values.		
Measuring limits			
• Low measuring limit			
- Measuring cell with silicone oil filling	0 bar a/0 kPa a/0 psi a		
• Upper measuring limit	100% of max. measuring span		
Lower range value	Between the measuring limits (infinitely adjustable)		
Output	**HART**		
Output signal	4 ... 20 mA		
• Low saturation limit (infinitely adjustable)	3.55 mA, factory preset to 3.8 mA		
• High saturation limit (infinitely adjustable)	22.8 mA, factory-set to 20.5 mA or optionally 22.0 mA		
• Ripple (without HART communication)	$I_{pp} \leq 0.5\%$ of max. output current		
Adjustable damping	0 … 100 s, continuously adjustable over remote operation 0 … 100 s, in increments of 0.1 s, adjustable over display		
• Current transmitter	3.55 … 22.8 mA		
• Failure signal	3.55 … 22.8 mA		
Load	Resistor R [Ω]		
• Without HART communication	R = (U_H - 10.5 V)/22.8 mA, U_H: Power supply in V		
• With HART communication	R = 230 … 1100 Ω (HART communicator (handheld)) R = 230 … 500 Ω (SIMATIC PDM)		
Characteristic curve	• Linearly increasing or linearly decreasing • Linear increase or decrease or according to the square root (only for differential pressure and flow)		
Physical bus	-		
Polarity-independent	-		

© Siemens 2020

SITRANS P320 / SITRANS P420 for gauge and absolute pressure, with flush-mounted diaphragm		
Gauge pressure measuring accuracy, with flush-mounted diaphragm		
Reference conditions	• According to EN 60770-1 • Rising characteristic curve • Lower range value 0 bar/kPa/psi • Seal diaphragm stainless steel • Measuring cell with silicone oil filling • Room temperature 25 °C (77 °F)	
Conformity error at limit point setting, including hysteresis and repeatability		
Measuring span ratio r (spread, Turn-Down)	r = maximum measuring span/set measuring span or nominal measuring range	
• Linear characteristic		
- 1 bar/100 kPa/14.5 psi 4 bar/400 kPa/58 psi 16 bar/1.6 MPa/232 psi 63 bar/6.3 MPa/914 psi	r ≤ 5:	≤ 0.075%
	5 < r ≤ 100:	≤ (0.005 · r + 0.05)%
Influence of ambient temperature in % per 28 °C (50 °F)		
• 1 bar/100 kPa/14.5 psi 4 bar/400 kPa/58 psi 16 bar/1.6 MPa/232 psi 63 bar/6.3 MPa/914 psi	≤ (0.08 · r + 0.16)%	
Influence of the temperature of medium (in pressure per temperature unit)		
• Temperature difference between temperature of medium and ambient temperature	3 mbar/0.3 kPa/0.04 psi per 10 K	
Long-term stability at ±30 °C (±54 °F)		
• 1 bar/100 kPa/14.5 psi 4 bar/400 kPa/58 psi	In 5 years ≤ (0.25 · r)%	
• 16 bar/1.6 MPa/232 psi 63 bar/6.3 MPa/914 psi	In 5 years ≤ (0.125 · r)%	
Step response time T_{63} (without electrical damping)	≤ 0.105 s	
Effect of mounting position (in pressure per change of angle)	0.4 mbar/0.04 kPa/0.006 per 10° incline (zero point correction is possible with position error compensation)	
Effect of auxiliary power (in % per voltage change)	0.005% per 1 V	
Absolute pressure measuring accuracy with flush diaphragm		
Reference conditions	• According to EN 60770-1 • Rising characteristic curve • Lower range value 0 bar/kPa/psi • Seal diaphragm stainless steel • Measuring cell with silicone oil filling • Room temperature 25 °C (77 °F)	
Conformity error at limit point setting, including hysteresis and repeatability		
Measuring span ratio r (spread, Turn-Down)	r = maximum measuring span/set measuring span or nominal measuring range	
• Linear characteristic		
- All measuring cells	r ≤ 10:	≤ 0.2%
	10 < r ≤ 30:	≤ 0.4%
Influence of ambient temperature in % per 28 °C (50 °F)		
• All measuring cells	≤ (0.16 · r + 0.24)%	
Influence of the temperature of medium (in pressure per temperature unit)		
• Temperature difference between temperature of medium and ambient temperature	3 mbar/0.3 kPa/0.04 psi per 10 K	
Long-term stability at ±30 °C (±54 °F)		
• All measuring cells	In 5 years ≤ (0.25 · r)%	
Step response time T_{63} (without electrical damping)	≤ 0.105 s	
Effect of mounting position (in pressure per change of angle)	0.4 mbar/0.04 kPa/0.006 per 10° incline (zero point correction is possible with position error compensation)	
Effect of auxiliary power (in % per voltage change)	0.005% per 1 V	

© Siemens 2020

SITRANS P320 / SITRANS P420 for gauge and absolute pressure, with flush-mounted diaphragm	
Operating conditions	
Temperature of medium[2)]	
• Measuring cell with silicone oil filling	-40 … +150 °C (-40 … +302 °F) -40 … +200 °C (-40 … +392 °F) with cooling extension
• Measuring cell with inert oil	-20 … +100 °C (-4 … +212 °F)
• Measuring cell with FDA-compliant oil	-10 … +150 °C (14 … +302 °F)
Ambient conditions	
• Ambient temperature/enclosure	Observe the temperature class in areas subject to explosion hazard.
- Measuring cell with silicone oil filling	-40 ... +85 °C (-40 ... +185 °F)
- Measuring cell with inert oil (different pressure classes)	1 bar/100 kPa/14.5 psi 4 bar/400 kPa/58 psi 16 bar/1.6 MPa/232 psi 63 bar/6.3 MPa/914 ps -40 ... +85 °C (-40 ... +185 °F)
- Measuring cell with FDA-compliant oil	-10 ... +85°C (14 ... +185°F)
- Display	-20 … +80 °C (-4 … +176 °F)
• Storage temperature	-50 ... +85 °C (-58 ... +185 °F) (with FDA-compliant oil: -20 ... + 85 °C (-4 ... +185 °F))
• Climatic class in accordance with IEC 60721-3-4	4K4H
• Degree of protection	
- According to IEC 60529	IP66, IP68
- According to NEMA 250	Type 4X
• Electromagnetic compatibility	
- Emitted interference and interference immunity	According to IEC 61326 and NAMUR NE 21
Design	
Weight (pressure transmitter without mounting flange)	
Material	
• Wetted parts materials	
- Process connection	Stainless steel, mat. no. 1.4404/316L
- Seal diaphragm	Stainless steel, material no. 1.4404/316L or Alloy C276, material no. 2.4819
• Non-wetted parts materials	
- Electronics enclosure	• Low-copper die-cast aluminum GD-AlSi 12 or stainless steel precision casting, mat. no. 1.4409/ CF-3M • Standard: Powder coating with polyurethane Option: 2 coats: Coat 1: epoxy-based; coat 2: Polyurethane • Stainless steel type plate (1.4404/316L)
- Mounting bracket	Steel, electrogalvanized steel, or stainless steel
Process connection	• Flanges according to EN and ASME • F&B and pharmaceutical flanges • BioConnect/BioControl • PMC style
Electrical connection	Cable entry via the following screwed glands: • M20 x 1.5 • ½-14 NPT • Device plug Han 7D/Han 8D[3)] • Device plug M12
Displays and controls	
Keys	4 keys for operation directly on the device
Display	• With or without integrated display (optional) • Cover with inspection window (optional)
Auxiliary power U_H	
Terminal voltage on pressure transmitter	10.5 ... 45 V DC 10.5 ... 30 V DC in intrinsically safe mode
Ripple	$U_{ss} \leq 0.2$ V (47 … 125 Hz)
Noise	$U_{eff} \leq 1.2$ mV (0.5 … 10 kHz)
Auxiliary power	–
Separate supply voltage	–

© Siemens 2020

SITRANS P320 / SITRANS P420 for gauge and absolute pressure, with flush-mounted diaphragm	
Certificates and approvals	
Classification according to pressure equipment directive (PED 2014/68/EU)	For gases of fluid group 1 and liquids of fluid group 1; complies with requirements of article 4, paragraph 3 (sound engineering practice)
Drinking water	
• WRAS (England)	No.: 1903094 (option E83)
• ACS (France)	No.: 18 ACC LY 277 (option E85)
• NSF (USA)	No.: 20180920-MH61350 (option E84)
CRN (Canada)	No.: 0F9863.5C (option E60)
Explosion protection acc. to NEPSI (China)	No.: GYJ19.1058X (option E27)
Explosion protection acc. to INMETRO (Brazil)	No.: BRA-18-GE-0035X (option E25)
Explosion protection	
• Intrinsic safety "i"	
- Marking	II 1/2 G Ex ia/ib IIC T4/T6 Ga/Gb
- Permissible ambient temperature	-40 ... +80 °C (-40 ... +176 °F) temperature class T4 -40 ... +70 °C (-40 ... +158 °F) temperature class T6
- Permissible temperature of measuring medium	-40 ... +100 °C (-40 ... +212 °F) temperature class T4 -40 ... +70 °C (-40 ... +158 °F) temperature class T6
- Connection	To certified intrinsically safe circuits with peak values: U_i = 30 V, I_i = 101 mA, P_i = 760 mW U_i = 29 V, I_i = 110 mA, P_i = 800 mW
- Effective internal inductance/capacitance	L_i = 0.24 µH/C_i = 3.29 nF
• Flameproof enclosure "d"	
- Marking	Ex II 1/2 G Ex ia/db IIC T4/T6 Ga/Gb
- Permissible ambient temperature	-40 ... +80 °C (-40 ... +176 °F) temperature class T4 -40 ... +70 °C (-40 ... +158 °F) temperature class T6
- Permissible temperature of measuring medium	-40 ... +100 °C (-40 ... +212 °F) temperature class T4 -40 ... +70 °C (-40 ... +158 °F) temperature class T6
- Connection	To a circuit with the operating values: U_n = 10.5 to 45 V, 4 ... 20 mA
• Dust explosion protection for zones 21, 22	
- Marking	Ex II 2D Ex tb IIIC T120 °C Db Ex II 3D Ex tc IIIC T120 °C Dc
- Permissible ambient temperature	-40 ... +80 °C (-40 ... +176 °F)
- Permissible temperature of measuring medium	-40 ... +100 °C (-40 ... +212 °F)
- Max. surface temperature	120 °C (248 °F)
- Connection	To a circuit with the operating values: U_n = 10.5 to 45 V, 4 ... 20 mA
• Dust explosion protection for zones 20, 21, 22	
- Marking	Ex II 1D Ex ia IIIC T120 °C Da Ex II 2D Ex ib IIIC T120 °C Db
- Permissible ambient temperature	-40 ... +80 °C (-40 ... +176 °F)
- Permissible temperature of measuring medium	-40 ... +100 °C (-40 ... +212 °F)
- Connection	To certified intrinsically safe circuits with the peak values: U_i = 30 V, I_i = 101 mA, P_i = 760 mW U_i = 29 V, I_i = 110 mA, P_i = 800 mW
- Effective internal inductance/capacitance	L_i = 0.24 µH/C_i = 3.29 nF
• Type of protection for Zone 2	
- Marking	Ex II 3G Ex ec IIC T4/T6 Gc
- Permissible ambient temperature "ec"	-40 ... +80 °C (-40 ... +176 °F) temperature class T4 -40 ... +40 °C (-40 ... +104 °F) temperature class T6
- Permissible temperature of measuring medium	-40 ... +100 °C (-40 ... +212 °F) temperature class T4 -40 ... +70 °C (-40 ... +158 °F) temperature class T6
- "ec" connection	To a circuit with the operating values: U_n = 10.5 to 30 V, 4 ... 20 mA

© Siemens 2020

SITRANS P320 / SITRANS P420 for gauge and absolute pressure, with flush-mounted diaphragm	
• Explosion protection acc. to FM	Available soon
- Marking (XP/DIP) or IS; NI; S	CL I, DIV 1, GP ABCD T4 ... T6; CL II, DIV 1, GP EFG; CL III; Ex ia IIC T4 ... T6: CL I, DIV 2, GP ABCD T4 ... T6; CL II, DIV 2, GP FG; CL III
• Explosion protection according to CSA	Available soon
- Marking (XP/DIP) or (IS)	CL I, DIV 1, GP ABCD T4 ... T6; CL II, DIV 1, GP EFG; CL III; Ex ia IIC T4 ... T6: CL I, DIV 2, GP ABCD T4 ... T6; CL II, DIV 2, GP FG; CL III
NAMUR recommendations	
• NE 06	Standardized Electrical Signals and Questions Relating to Engineering Technology
• NE 21	Electromagnetic Compatibility (EMC) of Industrial Process and Laboratory Control Equipment
• NE 23	Extra Low Voltage Circuits with Safe Separation
• NE 43	Standardization of the Signal Level for the Failure Information of Digital Transmitters
• NE 53	Software and Hardware of Field Devices and Signal Processing Devices with Digital Electronics
• NE 80	The Application of the Pressure Equipment Directive to Process Control Devices
• NE 105	Specifications for Integrating Fieldbus Devices in Engineering Tools for Field Devices
• NE 107	Self-Monitoring and Diagnosis of Field Devices
• NE 131	NAMUR Standard Device - Field Devices for Standard Applications

1) The MAWP value of the pressure transmitter can be lower than the PN value of the mounting flange and vice versa.
To determine the maximum permissible operating pressure and the maximum permissible test pressure, use the lowest value as reference.

2) Observe the temperature limits in the process connection standards (e.g. DIN 32676 and DIN 11851) for the maximum temperature of medium for flush-mounted process connections.

3) Han 8D is identical to Han 8U.

HART communication	
HART	230 ... 1100 Ω
Protocol	HART 7
Software for computer	SIMATIC PDM

© Siemens 2020

Selection and ordering data

	Article No.
Pressure transmitter for gauge and absolute pressure, with flush-mounted diaphragm	
SITRANS P320 for gauge pressure ↗	**7MF0300-■■■■■-■■■■**
SITRANS P420 for gauge pressure ↗	**7MF0400-■■■■■-■■■■**
SITRANS P320 for absolute pressure ↗	**7MF0320-■■■■■-■■■■**
SITRANS P420 for absolute pressure ↗	**7MF0420-■■■■■-■■■■**
↗ Click on the Article no. for the online configuration in the PIA Life Cycle Portal.	
Communication	
HART, 4 ... 20 mA	**0**
Measuring cell filling	
Silicone oil	**1**
Inert filling liquid	**3**
Neobee oil	**4**
Maximum measuring span	
1000 mbar (14.5 psi)	**0J**
4000 mbar (58 psi)	**0N**
16 bar (232 psi)	**0Q**
63 bar (914 psi)	**0T**
1 300 mbar a (18.9 psi a)	**2L**
5000 mbar a (72.5 psi a)	**2P**
30 bar a (435 psi a)	**2R**
Process connection	
Flush-mounted diaphragm	**K**
Wetted parts materials: Process connection, seal diaphragm	
Stainless steel 316L/1.4404, stainless steel 316L/1.4404	**0**
Stainless steel 316L/1.4404, alloy C276/2.4819	**1**
Alloy C22/2.4602, alloy C276/2.4819	**2**
Non-wetted parts materials	
Die-cast aluminum	**1**
Stainless steel precision casting CF3M/1.4409 similar to 316L	**2**
Enclosure	
Dual chamber device	**5**
Type of protection	
Without Ex	**A**
Intrinsic safety	**B**
Flameproof enclosure	**C**
Flameproof enclosure, intrinsic safety	**D**
Dust protection by enclosure Zone 21/22 (DIP), increased safety Zone 2	**L**
Dust protection by enclosure Zone 20/21/22 (DIP), increased safety Zone 2	**M**
Combination of options B, C and L (zone model)	**S**
Combination of options B, C and M (zone model, Class Division)	**T**
Electrical connections/cable entries	
Thread for cable gland: Cable gland must be ordered separately as option (Axx)	
• 2 x M20 x 1.5	**F**
• 2 x ½-14 NPT	**M**
Local operation/display	
Without display (cover closed)	**0**
With display (cover closed)	**1**
With display (cover with glass pane)	**2**

© Siemens 2020

Selection and ordering data

Options	Order code
Append "-**Z**" to Article No., add order code and plain text or entry from drop-down list.	
Cable glands included	
Plastic	**A00**
Metal	**A01**
Stainless steel	**A02**
Stainless steel 316L/1.4404	**A03**
CMP, for XP devices	**A10**
CAPRI ADE 4F, CuZn, cable inner diameter 7 ... 12 mm, cable outer diameter 10 ... 16 mm	**A11**
CAPRI ADE 4F, stainless steel, cable inner diameter 7 ... 12 mm, cable outer diameter 10 ... 16 mm	**A12**
Device plug Han mounted left	
Device plug Han 7D (plastic, straight)	**A30**
Device plug Han 7D (plastic, angled)	**A31**
Device plug Han 7D (metal, straight)	**A32**
Device plug Han 7D (metal, angled)	**A33**
Device plug Han 8D (plastic, straight)	**A34**
Device plug Han 8D (plastic, angled)	**A35**
Device plug Han 8D (metal, straight)	**A36**
Device plug Han 8D (metal, angled)	**A37**
Cable socket included	
Plastic, for device plug Han 7D and Han 8D	**A40**
Metal, for device plug Han 7D and Han 8D	**A41**
Device plug M12 mounted left	
Stainless steel, without cable socket	**A62**
Stainless steel, with cable socket	**A63**
Cable entry/connector mounting	
2x sealing plugs M20 x 1.5, IP66/68 installed on both sides	**A90**
2x sealing plugs ½-14 NPT, IP66/68 installed on both sides	**A91**
Cable gland/connector mounted left	**A97**
Cable gland/connector mounted on right	**A99**
Nameplate labeling (standard labeling: English, unit bar)	
German (bar)	**B11**
French (bar)	**B12**
Spanish (bar)	**B13**
Italian (bar)	**B14**
Chinese (bar)	**B15**
Russian (bar)	**B16**
English (psi)	**B20**
English (Pa)	**B30**
Chinese (Pa)	**B35**
Certificates	
Quality test certificate, 5-point factory calibration (IEC 60770-2)	**C11**
Inspection certificate (EN 10204-3.1) - Material of pressurized and wetted parts	**C12**
Factory certificate - NACE (MR 0103-2012 and MR 0175-2009))	**C13**
Factory certificate (EN 10204-2.2) - Wetted parts	**C14**
Inspection certificate (EN 10204-3.1) - PMI test of pressurized and wetted parts	**C15**
Certificates for functional safety	
Functional safety (IEC 61508) - SIL2/3	**C20**

Options	Order code
Append "-**Z**" to Article No., add order code and plain text or entry from drop-down list.	
Device options	
PDF file with device settings	**D10**
Double layer coating (epoxy resin and polyurethane) 120 µm of enclosure and cover	**D20**
FVMQ enclosure sealing	**D21**
IP66/IP68 degree of protection (not for device plugs M12 and Han)	**D30**
TAG label empty	**D40**
Without labeling of the measuring range on the TAG label	**D41**
Stainless steel Ex plate 1.4404/316L	**D42**
Overvoltage protection up to 6 kV (external)	**D71**
Adhesive labels on transport packaging (supplied by customer)	**D90**
General approval without Ex approval	
Worldwide (CE, RCM) except EAC, FM, CSA, KCC	**E00**
Worldwide (CE, RCM, EAC, FM, CSA, KCC)	**E01**
CSA (USA and Canada)	**E06**
EAC	**E07**
FM	**E08**
KCC	**E09**
Export approval CPA (China)	**E12**
Explosion protection approvals	
ATEX (Europe)	**E20**
CSA (USA and Canada)	**E21**
FM (USA and Canada)	**E22**
IECEx (Worldwide)	**E23**
EACEx (GOST-R, -K, -B)	**E24**
INMETRO (Brazil)	**E25**
KCs (Korea)	**E26**
NEPSI (China)	**E27**
PESO (India)	**E28**
UKR Sepro (Ukraine)	**E30**
ATEX (Europe) and IECEx (Worldwide)	**E47**
CSA (Canada) and FM (USA)	**E48**
ATEX (Europe) and IECEx (Worldwide) + CSA (Canada) and FM (USA)	**E49**
Marine approvals	
DNV-GL (Det Norske Veritas/Germanischer Lloyd)	**E50**
LR (Lloyds Register)	**E51**
BV (Bureau Veritas)	**E52**
ABS (American Bureau of Shipping)	**E53**
RMR (Russian Maritime Register)	**E55**
KR (Korean Register of Shipping)	**E56**
RINA (Registro Italiano Navale)	**E57**
CCS (China Classification Society)	**E58**
Country-specific approvals	
CRN approval Canada (Canadian Registration Number)	**E60**

© Siemens 2020

Options	Order code
Append "-**Z**" to Article No., add order code and plain text or entry from drop-down list.	
Special approvals	
Oxygen application (with inert liquid, max. 100 bar (1 450 psi) at 60° C (140 °F))	**E80**
Dual seal	**E81**
WRC / WRAS (drinking water); only with pressure cap O-rings made of EPDM	**E83**
NSF61 (drinking water)	**E84**
ACS (drinking water)	**E85**
3A (hygiene)	**E86**
EHEDG (hygiene)	**E87**
Process flanges, gaskets (instead of standard gaskets FKM (FPM))	
Seal (EN 837-1) material Fe (soft iron)	**K60**
Seal (EN 837-1) material 1.4571	**K61**
Seal (EN 837-1) material Cu	**K62**
Process connection	
Process connection male thread G½, bore hole 11 mm	**K80**
Flanges according to DIN EN 1092-1 Form B1 and ASME standard B16.5	
EN 1092-1 Form B1	
• DN 50 PN 16	**M03**
• DN 80 PN 16	**M05**
• DN 25 PN 40	**M10**
• DN 40 PN 40	**M12**
• DN 50 PN 40	**M13**
• DN 80 PN 40	**M15**
• DN 40 PN 100	**M22**
ASME B16.5	
• 1" Class 150 RF	**M30**
• 1 ½" Class 150 RF	**M31**
• 2" Class 150 RF	**M32**
• 3" Class 150 RF	**M33**
• 4" Class 150 RF	**M34**
• 1 ½" Class 300 RF	**M36**
• 2" Class 300 RF	**M37**
• 3" Class 300 RF	**M38**
• 4" Class 300 RF	**M39**
Sanitary connections in accordance with the standard	
Sanitary flange DIN 11851	
• with slotted union nut DN 50 PN 25	**N03**
• with slotted union nut DN 80 PN 25	**N05**
Tri-Clamp	
• DIN 32676 DN 50 PN 16	**N14**
• DIN 32676 DN 65 PN 10	**N15**
• ISO 2852 2" PN 40	**N22**
• ISO 2852 3" PN 40	**N23**
Aseptic threaded socket	
• DIN 11864-1 Form A DN 50 PN 25	**N33**
• DIN 11864-1 Form A DN 65 PN 25	**N34**
• DIN 11864-1 Form A DN 80 PN 25	**N35**
• DIN 11864-1 Form A DN100 PN 25	**N36**
Aseptic flange with notch	
• DIN 11864-2 Form A DN 50 PN 16	**N43**
• DIN 11864-2 Form A DN 65 PN 16	**N44**
• DIN 11864-2 Form A DN 80 PN 16	**N45**
• DIN 11864-2 Form A DN100 PN 16	**N46**
Aseptic clamp with groove	
• DIN 11864-3 Form A DN 50 PN 25	**N53**
• DIN 11864-3 Form A DN 65 PN 25	**N54**
• DIN 11864-3 Form A DN 80 PN 16	**N55**
• DIN 11864-3 Form A DN100 PN 16	**N56**

Options	Order code
Append "-**Z**" to Article No., add order code and plain text or entry from drop-down list.	
Sanitary connections manufacturer-specific	
Varivent type N for pipes DN 40 ... DN 125 PN 40	**P06**
Sanitary connections special design	
Tank connection	
• TG 52/50 PN 40 with seal	**Q00**
• TG 52/150 PN 40 with seal	**Q01**
DRD flange D = 65 mm DN 50 PN 40	**Q15**
SMS socket	
• with thread 2" PN 25	**Q28**
• with thread 2 ½" PN 25	**Q29**
• with thread 3" PN 25	**Q30**
Weldable sockets for tank connection	
Weldable piece for TG52/50	**Q90**
Weldable piece for TG52/150	**Q91**
Connections for the paper industry	
Process connection PMC Style Standard	**R00**
Process connection PMC Style Minibolt	**R01**
Weldable sockets for PMC Style Standard	**R02**
Weldable sockets for PMC Style Minibolt	**R03**
Threaded connection	
Male thread G¾-A DIN 3852	**R11**
Male thread G1-A DIN 3852	**R12**
Male thread G2-A DIN 3852	**R14**
Special options front-flush	
Temperature decoupler (media temperature up to 200 °C)	**R85**
Mating connector including seal	**R90**

© Siemens 2020

Options	Order code
Append "-**Z**" to Article No., add order code and plain text or entry from drop-down list.	
Device settings	
Measuring span Lower range value (max. 5 characters), upper range value (max. 5 characters), unit [mbar, bar, kPa, MPa, psi, ...], example: -0.5 ... 10.5 psi Input field 1 and input field 2: max. 5 characters and numbers only; decimal places as dot (comma is automatically converted to dot). Drop-down list: Pa, MPa, kPa, hPa, bar, mbar, psi, g/cm^2, kg/cm^2, kgf/cm^2, inH$_2$O, inH$_2$O (4°C), ftH$_2$O, mmH$_2$O, mmH$_2$O (4°C), mH$_2$O (4°C), mmHg, inHg, atm, torr	**Y01**
TAG (on stainless steel plate and device parameters, max. 32 characters) Input field: Free text, max. 32 characters	**Y15**
Measuring point description (on stainless steel plate and device parameters, max. 32 characters) Input field: Free text, max. 32 characters	**Y16**
TAG short (device parameters, max. 8 characters) Input field: Free text, max. 8 characters	**Y17**
Local display [Pressure, Percent], reference [None, Absolute, Relative], example: Pressure gauge Drop-down list: Percent, pressure unit, pressure unit abs., pressure unit gauge	**Y21**
Local display Scaling with standard units [m^3/s, l/s, m, inch, ...], example 1 ... 5 m Input field 1 and input field 2: max. 5 characters and numbers only; decimal places as dot (comma is automatically converted to dot). Drop-down list: m, cm, mm, in, ft, m^3, l, hl, in^3, ft^3, yd^3, gal, gal (UK), bu, bbl, bbl (US), SCF, Nm^3, Nl.	**Y22**
Local display Scaling with user-specific units (max. 12 characters), example 1 ... 5 m Input field 1 and input field 2: max. 5 characters and numbers only; decimal places as dot (comma is automatically converted to dot). Input field 3: Free text, max. 8 characters	**Y23**
Saturation limits instead of 3.8 ... 20.5 mA, example: 3.8 ... 22.0 mA Drop-down list 1: 3.9, 4 Drop-down list 2: 20.8, 22	**Y30**
Fault current instead of 3.6 mA [22.5 mA, 22.8 mA] Drop-down list: 3.75; 21.75; 22.5; 22.6	**Y31**
Damping in seconds instead of 2 s (0.0 ... 100.0 s) Input field: max. 4 characters and numbers only; decimal places as dot (comma is automatically converted to dot); min. value = 0; max. value = 100.	**Y32**
ID number of special version Input field: max. 4 characters and only natural numbers from 0 … 9999	**Y99**

© Siemens 2020

Dimensional drawings

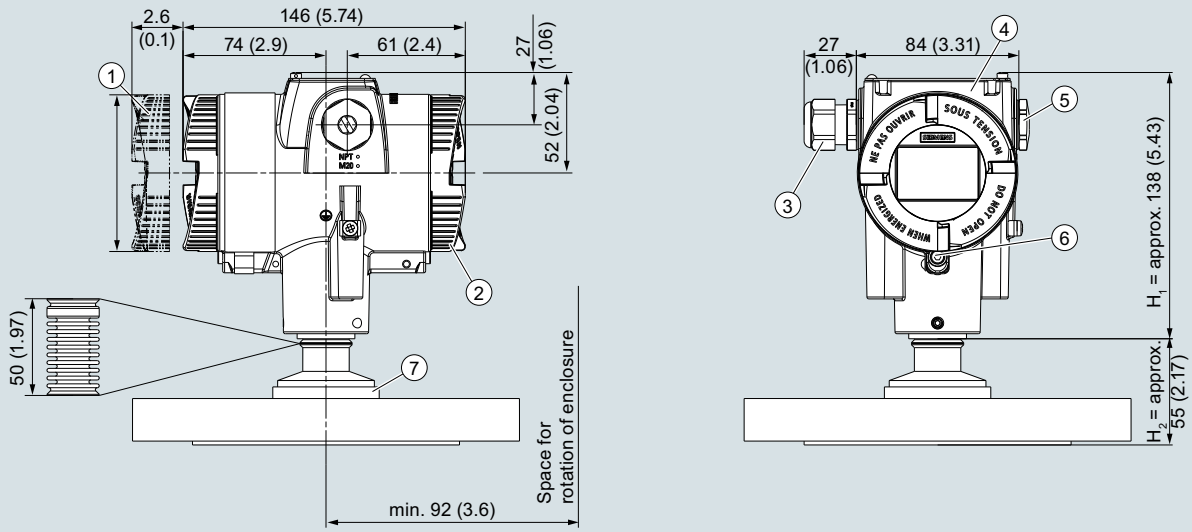

1. Electronics side, local display (longer overall length for cover with glass pane)[1]
2. Connection side
3. Electrical connection:
   - M20 x 1,5[3] screw gland
   - ½-14 NPT screw gland
   - Han 7D/Han 8D[2] [3] device plug
   - M12 device plug[2] [3]
4. Cover over buttons and nameplate with general information
5. Blanking plug
6. Safety catch (only for "flameproof enclosure" type of protection)
7. Process connection

[1] In addition, allow approx. 22 mm (0.87 inch) for the thread length when removing the covers
[2] Not with "flameproof enclosure" type of protection
[3] Not with type of protection "FM + CSA" [is + XP]"

SITRANS P320/P420 pressure transmitter, with flush-mounted diaphragm, dimensions in mm (inch)

This figure consists of a SITRANS P320/P420 with an example flange.
In this figure, the height is divided into H_1 and H_2.

H_1 = Height of the SITRANS P320P420 up to a defined cross-section

H_2 = Height of the flange up to this defined cross-section

Only the height H_2 is indicated in the dimensions of the flanges.

© Siemens 2020

Flanges according to EN and ASME

Flange according to EN

EN 1092-1

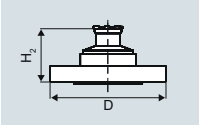

Order code	DN	PN	∅D	H_2
M03	50	16	165 mm (6.5")	Approx. 52 mm (2")
M05	80	16	200 mm (7.9")	
M10	25	40	115 mm (4.5")	
M12	40	40	150 mm (5.9")	
M13	50	40	165 mm (6.5")	
M15	80	40	200 mm (7.9")	
M22	40	100	170 mm (6.7")	

Flanges according to ASME

ASME B16.5

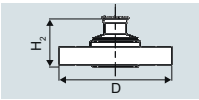

Order code	DN	Class	∅D	H_2
M30	1"	150	110 mm (4.3")	Approx. 52 mm (2")
M31	1½"	150	125 mm (4.9")	
M32	2"	150	150 mm (5.9")	
M33	3"	150	190 mm (7.5")	
M34	4"	150	230 mm (9.1")	
M36	1½"	300	155 mm (6.1")	
M37	2"	300	165 mm (6.5")	
M38	3"	300	210 mm (8.1")	
M39	4"	300	255 mm (10.0")	

NuG and pharmaceutical connections

Connections to DIN

DIN 11851 (milk pipe union with slotted union nut)

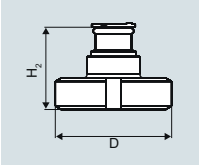

Order code	DN	PN	∅D	H_2
N03	50	25	92 mm (3.6")	Approx. 52 mm (2")
N05	80	25	127 mm (5.0")	

TriClamp according to DIN 32676

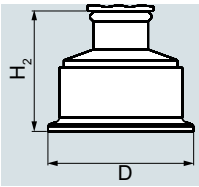

Order code	DN	PN	∅D	H_2
N14	50	16	64 mm (2.5")	Approx. 52 mm (2")
N15	65	16	91 mm (3.6")	
N22	2"	16	64 mm (2.5")	Approx. 52 mm (2")
N23	3"	10	91 mm (3.6")	

Other connections

Varivent connection

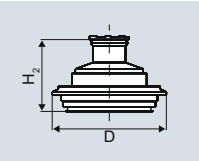

Order code	DN	PN	∅D	H_2
P06	40 ... 125	40	84 mm (3.3")	Approx. 52 mm (2")

Sanitary process connection according to DRD

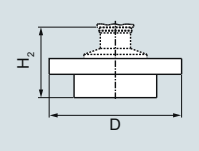

Order code	DN	PN	∅D	H_2
Q15	65	40	105 mm (4.1")	Approx. 52 mm (2")

Threaded connection G¾", G1" and G2" acc. to DIN 3852

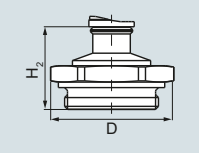

Order code	DN	PN	∅D	H_2
R11	¾"	60	37 mm (1.5")	Approx. 45 mm (1.8")
R12	1"	60	48 mm (1.9")	Approx. 47 mm (1.9")
R14	2"	60	78 mm (3.1")	Approx. 52 mm (2")

Tank connection TG 52/50 and TG52/150

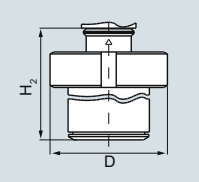

Order code	DN	PN	∅D	H_2
Q00	25	40	63 mm (2.5")	Approx. 63 mm (2.5")
Q01	25	40	63 mm (2.5")	Approx. 170 mm (6.7")

SMS threaded socket

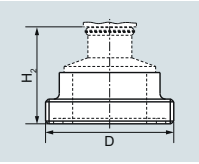

Order code	DN	PN	∅D	H_2
Q28	2"	25	70 x 1/6 mm	Approx. 52 mm (2.1")
Q29	2½"	25	85 x 1/6 mm	
Q30	3"	25	98 x 1/6 mm	

© Siemens 2020

for gauge and absolute pressure, flush-mounted diaphragm

Aseptic threaded socket according to DIN 11864-1 Form A

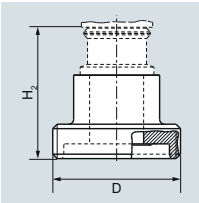

Order code	DN	PN	∅D	H_2
N33	50	25	78 x 1/6"	Approx. 52 mm (2.1")
N34	65	25	95 x 1/6"	
N35	80	25	110 x ¼"	
N36	100	25	130 x ¼"	

Aseptic flange with notch to DIN 11864-2 Form A

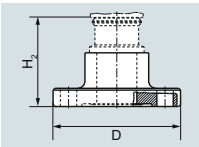

Order code	DN	PN	∅D	H_2
N43	50	16	94 (3.7")	Approx. 52 mm (2.1")
N44	65	16	113 (4.4")	
N45	80	16	133 (5.2")	
N46	100	16	159 (6.3")	

Aseptic clamp with groove according to DIN 11864-3 Form A

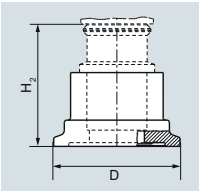

Order code	DN	PN	∅D	H_2
N53	50	25	77.5 (3.1")	Approx. 52 mm (2.1")
N54	65	25	91 (3.6")	
N55	80	16	106 (4.2")	
N56	100	16	130 (5.1")	

Process connection PMC Style Standard

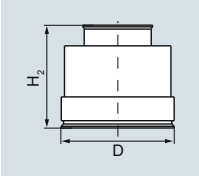

Order code	DN	PN	∅D	H_2
R00	-	-	40.9 mm (1.6")	Approx. 36.8 mm (1.4")

Process connection PMC Style Minibolt

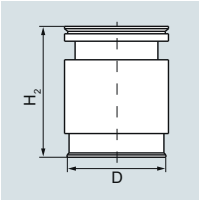

Order code	DN	PN	∅D	H_2
R01	-	-	26.3 mm (1.0")	Approx. 33.1 mm (1.3")

© Siemens 2020

Technical specifications

SITRANS P320 / SITRANS P420 for absolute pressure (pressure series)			
Input			
Measured variable	Absolute pressure		
Measuring span (infinitely adjustable) or measuring range, max. permissible operating pressure (in accordance with Pressure Equipment Directive 2014/68/EU) and max. test pressure (pursuant to DIN 16086)	Measuring span	Max. permissible operating pressure MAWP (PS)	Maximum permissible test pressure
	8.3 … 250 mbar a	4 bar a	6 bar a
	0.83 ... 25 kPa a	0.4 MPa a	0.6 MPa a
	3.3 … 100.5 inH_2O a	58 psi a	87 psi a
	43 … 1300 mbar a	6.6 bar a	10 bar a
	4.3 ... 130 kPa a	0.66 MPa a	1 MPa a
	17.3 … 522 inH_2O a	95 psi a	145 psi a
	166 … 5000 mbar a	20 bar a	30 bar a
	16.6 ... 500 kPa a	2 MPa a	3 MPa a
	2.41 … 72.5 psi a	290 psi a	435 psi a
	1 … 30 bar a	65 bar a	100 bar a
	0.1 ... 3 MPa a	6.5 MPa a	10 MPa a
	14.5 … 435 psi a	942 psi a	1450 psi a
	5.3 … 160 bar a	240 bar	380 bar a
	0.53 ... 16 MPa a	24 MPa	38 MPa a
	77 … 2321 psi a	3481 psi	5511 psi a
	13.3 … 400 bar a	400 bar a	600 bar a
	1.3 ... 40 MPa a	40 MPa a	60 MPa a
	192 … 5802 psi a	5802 psi a	8702 psi a
	23.3 … 700 bar a	800 bar a	800 bar a
	2.3 ... 70 MPa a	80 MPa a	80 MPa a
	337 … 10153 psi a	11603 psi a	11603 psi a
Measuring limits			
• Low measuring limit			
- Measuring cell with silicone oil filling	0 mbar a/kPa a/psi a		
- Measuring cell with inert oil	For temperature of medium -20-°C < ϑ ≤ +60 °C (-4 °F < ϑ ≤ +140 °F)		30 mbar a/3 kPa a/0.44 psi a
	For temperature of medium 60 °C < ϑ ≤ +100 °C (max. 85 °C for measuring cell 30 bar) (140 °F < ϑ ≤ +212 °F (max. 185 °F for measuring cell 435 psi))		30 mbar a + 20 mbar a · (ϑ - 60 °C)/°C 3 kPa a + 2 kPa a · (ϑ - 60 °C)/°C 0.44 psi a + 0.29 psi a · (ϑ - 140 °F)/°F
• Upper measuring limit	100% of the max. measuring span (for oxygen measurement max. 100 bar/10 MPa/ 1450 psi and 60 °C (140 °F) ambient temperature/temperature of medium)		
• Lower range value	Between the measuring limits (infinitely adjustable)		
Output	**HART**		
Output signal	4 ... 20 mA		
• Low saturation limit (infinitely adjustable)	3.55 mA, factory preset to 3.8 mA		
• High saturation limit (infinitely adjustable)	22.8 mA, factory-set to 20.5 mA or optionally 22.0 mA		
• Ripple (without HART communication)	I_{pp} ≤ 0.5% of max. output current		
Adjustable damping	0 … 100 s, continuously adjustable over remote operation		
	0 … 100 s, in increments of 0.1 s, adjustable over display		
• Current transmitter	3.55 … 22.8 mA		
• Failure signal	3.55 … 22.8 mA (factory preset to 3.55 mA)		
Load	Resistor R [Ω]		
• Without HART communication	R = (U_H - 10.5 V)/22.8 mA, U_H: Power supply in V		
• With HART communication	R = 230 … 1100 Ω (HART communicator (handheld))		
	R = 230 … 500 Ω (SIMATIC PDM)		
Characteristic curve	• Linearly increasing or linearly decreasing • Linear increase or decrease or according to the square root (only for differential pressure and flow)		
Physical bus	-		
Polarity-independent	-		

© Siemens 2020

SITRANS P320 / SITRANS P420 for absolute pressure (pressure series)	
Measuring accuracy	
Reference conditions	• According to EN 60770-1 • Rising characteristic curve • Lower range value 0 bar/kPa/psi • Seal diaphragm stainless steel • Measuring cell with silicone oil filling • Room temperature 25 °C (77 °F)
Conformity error at limit point setting, including hysteresis and repeatability	
Measuring span ratio r (spread, Turn-Down)	r = maximum measuring span/set measuring span or nominal measuring range
• Linear characteristic (all measuring cells)	
- r ≤ 10	≤ 0.1%
- 10 < r ≤ 30	≤ 0.2%
Influence of ambient temperature (in % per 28 °C (50 °F))	
• 250 mbar a/25 kPa a/3.6 psi a	≤ (0.15 · r + 0.1)%
• 1300 mbar a/130 kPa a/18.8 psi a 5 bar a/500 kPa a/72.5 psi a 30 bar a/3000 kPa a/435 psi a 160 bar a/16 MPa a/2321 psi a 400 bar a/40 MPa a/5802 psi a 700 bar a/70 MPa a/10153 psi a	≤ (0.08 · r + 0.16)%
Long-term stability at ±30 °C (±54 °F)	In 5 years ≤ (0.25 · r)%
Step response time T_{63} (without electrical damping)	Approx. 0.105 s
Effect of mounting position (in pressure per change of angle)	≤ 0.05 mbar/0.005 kPa/0.000725 psi per 10° incline (zero point correction is possible with position error compensation)
Effect of auxiliary power (in % per voltage change)	0.005% per 1 V
Operating conditions	
Temperature of medium	
• Measuring cell with silicone oil filling	-40 ... +100 °C (-40 ... +212 °F)
• Measuring cell with inert filling fluid	-20 ... +100 °C (-4 ... +212 °F)
Ambient conditions	
• Ambient temperature/enclosure	Observe the temperature class in areas subject to explosion hazard.
- Measuring cell with silicone oil filling	-40 ... +85 °C (-40 ... +185 °F)
- Measuring cell with inert filling fluid	-40 … +85 °C (-40 … +185 °F)
- Display	-20 … +80 °C (-4 … +176 °F)
• Storage temperature	-50 ... +85 °C (-58 ... +185 °F) (with FDA-compliant oil: -20 ... + 85 °C (-4 ... +185 °F))
• Climatic class in accordance with IEC 60721-3-4	4K4H
• Degree of protection	
- According to IEC 60529	IP66, IP68
- According to NEMA 250	Type 4X
• Electromagnetic compatibility	
- Emitted interference and interference immunity	According to IEC 61326 and NAMUR NE 21

© Siemens 2020

SITRANS P320 / SITRANS P420 for absolute pressure (pressure series)	
Design	
Weight	Approx. 2.3 kg (5.07 lb) with aluminum enclosure Approx. 4.2 kg (9.25 lb) for stainless steel enclosure
Material	
• Wetted parts materials	
- Process connection	Stainless steel, material no. 1.4404/316L or Alloy C22, material no. 2.4602
- Oval flange	Stainless steel, mat. no. 1.4404/316L
- Seal diaphragm	Stainless steel, material no. 1.4404/316L or Alloy C276, material no. 2.4819
• Non-wetted parts materials	
- Electronics enclosure	• Low-copper die-cast aluminum GD-AlSi 12 or stainless steel precision casting, mat. no. 1.4409/ CF-3M • Standard: Powder coating with polyurethane Option: 2 coats: Coat 1: epoxy-based; coat 2: Polyurethane • Stainless steel type plate (1.4404/316L)
- Mounting bracket	Electrogalvanized steel or stainless steel
Process connection	• Connection shank G1/2A according to DIN EN 837-1 • Female thread ½-14 NPT • Male thread M20 x 1.5 and ½-14 NPT • Oval flange (PN 160 (MWP 2320 psi g)) with fastening screw thread: - 7/16-20 UNF according to EN 61518 - M10 according to DIN 19213 • Oval flange (PN 420 (MWP 2320 psi g)) with fastening screw thread: - 7/16-20 UNF according to EN 61518 - M12 according to DIN 19213 • Male thread M20 x 1.5 and ½-14 NPT
Electrical connection	Cable entry via the following screwed glands: • M20 x 1.5 • ½-14 NPT • Device plug Han 7D/Han 8D[1)] • Device plug M12
Displays and controls	
Keys	4 keys for operation directly on the device
Display	• With or without integrated display (optional) • Cover with inspection window (optional)
Auxiliary power U_H	
Terminal voltage on pressure transmitter	10.5 ... 45 V DC 10.5 ... 30 V DC in intrinsically safe mode
Ripple	$U_{SS} \leq 0.2$ V (47 … 125 Hz)
Noise	$U_{eff} \leq 1.2$ mV (0.5 … 10 kHz)
Auxiliary power	–
Separate supply voltage	–
Certificates and approvals	
Classification according to pressure equipment directive (PED 2014/68/EU)	For gases of fluid group 1 and liquids of fluid group 1; complies with requirements of article 4, paragraph 3 (sound engineering practice)
Drinking water	
• WRAS (England)	No.: 1903094 (option E83)
• ACS (France)	No.: 18 ACC LY 277 (option E85)
• NSF (USA)	No.: 20180920-MH61350 (option E84)
CRN (Canada)	No.: 0F9863.5C (option E60)
Explosion protection acc. to NEPSI (China)	No.: GYJ19.1058X (option E27)
Explosion protection acc. to INMETRO (Brazil)	No.: BRA-18-GE-0035X (option E25)
Explosion protection	
• Intrinsic safety "i"	
- Marking	II 1/2 G Ex ia/ib IIC T4/T6 Ga/Gb
- Permissible ambient temperature	-40 ... +80 °C (-40 ... +176 °F) temperature class T4 -40 ... +70 °C (-40 ... +158 °F) temperature class T6
- Permissible temperature of measuring medium	-40 ... +100 °C (-40 ... +212 °F) temperature class T4 -40 ... +70 °C (-40 ... +158 °F) temperature class T6
- Connection	To certified intrinsically safe circuits with peak values: U_i = 30 V, I_i = 101 mA, P_i = 760 mW U_i = 29 V, I_i = 110 mA, P_i = 800 mW
- Effective internal inductance/capacitance	L_i = 0.24 µH/C_i = 3.29 nF
• Flameproof enclosure "d"	
- Marking	Ex II 1/2 G Ex ia/db IIC T4/T6 Ga/Gb
- Permissible ambient temperature	-40 ... +80 °C (-40 ... +176 °F) temperature class T4 -40 ... +70 °C (-40 ... +158 °F) temperature class T6
- Permissible temperature of measuring medium	-40 ... +100 °C (-40 ... +212 °F) temperature class T4 -40 ... +70 °C (-40 ... +158 °F) temperature class T6
- Connection	To a circuit with the operating values: U_n = 10.5 to 45 V, 4 ... 20 mA

© Siemens 2020

SITRANS P320 / SITRANS P420 for absolute pressure (pressure series)	
• Dust explosion protection for zones 21, 22	
- Marking	Ex II 2D Ex tb IIIC T120 °C Db Ex II 3D Ex tc IIIC T120 °C Dc
- Permissible ambient temperature	-40 ... +80 °C (-40 ... +176 °F)
- Permissible temperature of measuring medium	-40 ... +100 °C (-40 ... +212 °F)
- Max. surface temperature	120 °C (248 °F)
- Connection	To a circuit with the operating values: U_n = 10.5 to 45 V, 4 ... 20 mA
• Dust explosion protection for zones 20, 21, 22	
- Marking	Ex II 1D Ex ia IIIC T120 °C Da Ex II 2D Ex ib IIIC T120 °C Db
- Permissible ambient temperature	-40 ... +80 °C (-40 ... +176 °F)
- Permissible temperature of measuring medium	-40 ... +100 °C (-40 ... +212 °F)
- Connection	To certified intrinsically safe circuits with the peak values: U_i = 30 V, I_i = 101 mA, P_i = 760 mW U_i = 29 V, I_i = 110 mA, P_i = 800 mW
- Effective internal inductance/capacitance	L_i = 0.24 µH/C_i = 3.29 nF
• Type of protection for Zone 2	
- Marking	Ex II 3G Ex ec IIC T4/T6 Gc
- Permissible ambient temperature "ec"	-40 ... +80 °C (-40 ... +176 °F) temperature class T4 -40 ... +40 °C (-40 ... +104 °F) temperature class T6
- Permissible temperature of measuring medium	-40 ... +100 °C (-40 ... +212 °F) temperature class T4 -40 ... +70 °C (-40 ... +158 °F) temperature class T6
- "ec" connection	To a circuit with the operating values: U_n = 10.5 to 30 V, 4 ... 20 mA
• Explosion protection acc. to FM	Available soon
- Marking (XP/DIP) or IS; NI; S	CL I, DIV 1, GP ABCD T4 ... T6; CL II, DIV 1, GP EFG; CL III; Ex ia IIC T4 ... T6: CL I, DIV 2, GP ABCD T4 ... T6; CL II, DIV 2, GP FG; CL III
• Explosion protection according to CSA	Available soon
- Marking (XP/DIP) or (IS)	CL I, DIV 1, GP ABCD T4 ... T6; CL II, DIV 1, GP EFG; CL III; Ex ia IIC T4 ... T6: CL I, DIV 2, GP ABCD T4 ... T6; CL II, DIV 2, GP FG; CL III
NAMUR recommendations	
• NE 06	Standardized Electrical Signals and Questions Relating to Engineering Technology
• NE 21	Electromagnetic Compatibility (EMC) of Industrial Process and Laboratory Control Equipment
• NE 23	Extra Low Voltage Circuits with Safe Separation
• NE 43	Standardization of the Signal Level for the Failure Information of Digital Transmitters
• NE 53	Software and Hardware of Field Devices and Signal Processing Devices with Digital Electronics
• NE 80	The Application of the Pressure Equipment Directive to Process Control Devices
• NE 105	Specifications for Integrating Fieldbus Devices in Engineering Tools for Field Devices
• NE 107	Self-Monitoring and Diagnosis of Field Devices
• NE 131	NAMUR Standard Device - Field Devices for Standard Applications

[1] Han 8D is identical to Han 8U.

HART communication	
HART	230 ... 1100 Ω
Protocol	HART 7
Software for computer	SIMATIC PDM

© Siemens 2020

Selection and ordering data

	Article No.
Pressure transmitters for absolute pressure (pressure series)	
SITRANS P320 ↗	**7MF032 ■ - ■■■■■ - ■■■■**
SITRANS P420 ↗	**7MF042 ■ - ■■■■■ - ■■■■**
↗ Click on the Article no. for the online configuration in the PIA Life Cycle Portal.	
Communication	
HART, 4 ... 20 mA	**0**
Measuring cell filling	
Silicone oil	**1**
IInert filling liquid	**3**
Maximum measuring span	
250 mbar a (100.5 inH_2O a)	**F**
1 300 mbar a (522 inH_2O a)	**L**
5000 mbar a (72.5 psi a)	**P**
30 bar a (435 psi a)	**R**
160 bar a (2 321 psi a)	**V**
400 bar a (5 802 psi a)	**W**
700 bar a (10153 psi a)	**X**
Process connection	
Male thread M20 x 1.5	**B**
Male thread G½ (DIN EN 837-1)	**D**
Female thread ½-14 NPT	**E**
Male thread ½-14 NPT	**F**
Oval flange, mounting thread: $^{7}/_{16}$-20 UNF (IEC 61518)	**G**
Oval flange, mounting thread: M10 (DIN 19213)	**H**
Oval flange, mounting thread: M12 (DIN 19213)	**J**
Version for diaphragm seal pressure	**U**
Wetted parts materials: Process connection, seal diaphragm	
Stainless steel 316L/1.4404, stainless steel 316L/1.4404	**0**
Stainless steel 316L/1.4404, alloy C276/2.4819	**1**
Alloy C22/2.4602, alloy C276/2.4819	**2**
Non-wetted parts materials	
Die-cast aluminum	**1**
Stainless steel precision casting CF3M/1.4409 similar to 316L	**2**
Enclosure	
Dual chamber device	**5**
Type of protection	
Without Ex	**A**
Intrinsic safety	**B**
Flameproof enclosure	**C**
Flameproof enclosure, intrinsic safety	**D**
Dust protection by enclosure Zone 21/22 (DIP), increased safety Zone 2	**L**
Dust protection by enclosure Zone 20/21/22 (DIP), increased safety Zone 2	**M**
Combination of options B, C and L (zone model)	**S**
Combination of options B, C and M (zone model, Class Division)	**T**
Electrical connections/cable entries	
Thread for cable gland: Cable gland must be ordered separately as option (Axx)	
• 2 x M20 x 1.5	**F**
• 2 x ½-14 NPT	**M**
Local operation/display	
Without display (cover closed)	**0**
With display (cover closed)	**1**
With display (cover with glass pane)	**2**

© Siemens 2020

Selection and ordering data

Options	Order code
Append "-**Z**" to Article No., add order code and plain text or entry from drop-down list.	
Cable glands included	
Plastic	**A00**
Metal	**A01**
Stainless steel	**A02**
Stainless steel 316L/1.4404	**A03**
CMP, for XP devices	**A10**
CAPRI ADE 4F, CuZn, cable inner diameter 7 ... 12 mm, cable outer diameter 10 ... 16 mm	**A11**
CAPRI ADE 4F, stainless steel, cable inner diameter 7 ... 12 mm, cable outer diameter 10 ... 16 mm	**A12**
Device plug Han mounted left	
Device plug Han 7D (plastic, straight)	**A30**
Device plug Han 7D (plastic, angled)	**A31**
Device plug Han 7D (metal, straight)	**A32**
Device plug Han 7D (metal, angled)	**A33**
Device plug Han 8D (plastic, straight)	**A34**
Device plug Han 8D (plastic, angled)	**A35**
Device plug Han 8D (metal, straight)	**A36**
Device plug Han 8D (metal, angled)	**A37**
Cable socket included	
Plastic, for device plug Han 7D and Han 8D	**A40**
Metal, for device plug Han 7D and Han 8D	**A41**
Device plug M12 mounted left	
Stainless steel, without cable socket	**A62**
Stainless steel, with cable socket	**A63**
Cable entry/connector mounting	
2x sealing plugs M20 x 1.5, IP66/68 installed on both sides	**A90**
2x sealing plugs ½-14 NPT, IP66/68 installed on both sides	**A91**
Cable gland/connector mounted left	**A97**
Cable gland/connector mounted on right	**A99**
Nameplate labeling (standard labeling: English, unit bar)	
German (bar)	**B11**
French (bar)	**B12**
Spanish (bar)	**B13**
Italian (bar)	**B14**
Chinese (bar)	**B15**
Russian (bar)	**B16**
English (psi)	**B20**
English (Pa)	**B30**
Chinese (Pa)	**B35**
Certificates	
Quality test certificate, 5-point factory calibration (IEC 60770-2)	**C11**
Inspection certificate (EN 10204-3.1) - Material of pressurized and wetted parts	**C12**
Factory certificate - NACE (MR 0103-2012 and MR 0175-2009))	**C13**
Factory certificate (EN 10204-2.2) - Wetted parts	**C14**
Inspection certificate (EN 10204-3.1) - PMI test of pressurized and wetted parts	**C15**
Certificates for functional safety	
Functional safety (IEC 61508) - SIL2/3	**C20**

Options	Order code
Append "-**Z**" to Article No., add order code and plain text or entry from drop-down list.	
Device options	
PDF file with device settings	**D10**
Double layer coating (epoxy resin and polyurethane) 120 µm of enclosure and cover	**D20**
FVMQ enclosure sealing	**D21**
IP66/IP68 degree of protection (not for device plugs M12 and Han)	**D30**
TAG label empty	**D40**
Without labeling of the measuring range on the TAG label	**D41**
Stainless steel Ex plate 1.4404/316L	**D42**
Overvoltage protection up to 6 kV (external)	**D71**
Adhesive labels on transport packaging (supplied by customer)	**D90**
General approval without Ex approval	
Worldwide (CE, RCM) except EAC, FM, CSA, KCC	**E00**
Worldwide (CE, RCM, EAC, FM, CSA, KCC)	**E01**
CSA (USA and Canada)	**E06**
EAC	**E07**
FM	**E08**
KCC	**E09**
Export approval CPA (China)	**E12**
Explosion protection approvals	
ATEX (Europe)	**E20**
CSA (USA and Canada)	**E21**
FM (USA and Canada)	**E22**
IECEx (Worldwide)	**E23**
EACEx (GOST-R, -K, -B)	**E24**
INMETRO (Brazil)	**E25**
KCs (Korea)	**E26**
NEPSI (China)	**E27**
PESO (India)	**E28**
UKR Sepro (Ukraine)	**E30**
ATEX (Europe) and IECEx (Worldwide)	**E47**
CSA (Canada) and FM (USA)	**E48**
ATEX (Europe) and IECEx (Worldwide) + CSA (Canada) and FM (USA)	**E49**
Marine approvals	
DNV-GL (Det Norske Veritas/Germanischer Lloyd)	**E50**
LR (Lloyds Register)	**E51**
BV (Bureau Veritas)	**E52**
ABS (American Bureau of Shipping)	**E53**
RMR (Russian Maritime Register)	**E55**
KR (Korean Register of Shipping)	**E56**
RINA (Registro Italiano Navale)	**E57**
CCS (China Classification Society)	**E58**
Country-specific approvals	
CRN approval Canada (Canadian Registration Number)	**E60**

© Siemens 2020

Options	Order code
Append "-**Z**" to Article No., add order code and plain text or entry from drop-down list.	
Special approvals	
Oxygen application (with inert liquid, max. 100 bar (1 450 psi) at 60° C (140 °F))	**E80**
Dual seal	**E81**
WRC / WRAS (drinking water); only with pressure cap O-rings made of EPDM	**E83**
NSF61 (drinking water)	**E84**
ACS (drinking water)	**E85**
Mounting bracket	
Steel, galvanized	**H01**
Stainless steel 1.4301/304	**H02**
Stainless steel 1.4404/316L	**H03**
Flange connections with flange EN 1092-1	
With flange adapter G½ Form B1	
• DN 25 PN 40, stainless steel 1.4571/316Ti	**J80**
• DN 50 PN 40, stainless steel 1.4571/316Ti	**J81**
• DN 80 PN 40, stainless steel 1.4571/316Ti	**J82**
With siphon G½ Form B1	
• DN 25 PN 40, stainless steel 1.4571/316Ti	**J83**
• DN 50 PN 40, stainless steel 1.4571/316Ti	**J84**
• DN 80 PN 40, stainless steel 1.4571/316Ti	**J85**
• DN 25 PN 100, stainless steel 1.4571/316Ti	**J86**
Process flanges, gaskets (instead of standard gaskets FKM (FPM))	
Seal (EN 837-1) material Fe (soft iron)	**K60**
Seal (EN 837-1) material 1.4571	**K61**
Seal (EN 837-1) material Cu	**K62**
Process connection	
Process connection male thread G½, bore hole 11 mm	**K80**
Shut-off valves, valve manifolds	
With mounted valve manifold 7MF9011-4EA, process connection at transmitter G½ shank, PTFE sealing ring and pressure test certified in in factory certificate (EN 10204-2.2)	**T02**
With mounted valve manifold 7MF9011-4FA, process connection at transmitter female thread ½-14 NPT, sealing tape. With PTFE sealing ring and pressure test certified in factory certificate (EN 10204-2.2)	**T03**
With mounted valve manifold 7MF9411-5AA, process connection at transmitter oval flange with PTFE gasket, steel mounting screws, pressure test certified in factory certificate (EN 10204-2.2)	**T05**
With mounted valve manifold 7MF9411-5AA, process connection at transmitter oval flange with PTFE gasket, stainless steel mounting screws, pressure test certified in factory certificate (EN 10204-2.2)	**T06**

Options	Order code
Append "-**Z**" to Article No., add order code and plain text or entry from drop-down list.	
Device settings	
Measuring span Lower range value (max. 5 characters), upper range value (max. 5 characters), unit [mbar, bar, kPa, MPa, psi, ...], example: -0.5 ... 10.5 psi Input field 1 and input field 2: max. 5 characters and numbers only; decimal places as dot (comma is automatically converted to dot). Drop-down list: Pa, MPa, kPa, hPa, bar, mbar, psi, g/cm^2, kg/cm^2, kgf/cm^2, inH$_2$O, inH$_2$O (4°C), ftH$_2$O, mmH$_2$O, mmH$_2$O (4°C), mH$_2$O (4°C), mmHg, inHg, atm, torr	**Y01**
TAG (on stainless steel plate and device parameters, max. 32 characters) Input field: Free text, max. 32 characters	**Y15**
Measuring point description (on stainless steel plate and device parameters, max. 32 characters) Input field: Free text, max. 32 characters	**Y16**
TAG short (device parameters, max. 8 characters) Input field: Free text, max. 8 characters	**Y17**
Local display [Pressure, Percent], reference [None, Absolute, Relative], example: Pressure gauge Drop-down list: Percent, pressure unit, pressure unit abs., pressure unit gauge	**Y21**
Local display Scaling with standard units [m^3/s, l/s, m, inch, ...], example 1 ... 5 m Input field 1 and input field 2: max. 5 characters and numbers only; decimal places as dot (comma is automatically converted to dot). Drop-down list: m, cm, mm, in, ft, m^3, l, hl, in^3, ft^3, yd^3, gal, gal (UK), bu, bbl, bbl (US), SCF, Nm^3, Nl.	**Y22**
Local display Scaling with user-specific units (max. 12 characters), example 1 ... 5 m Input field 1 and input field 2: max. 5 characters and numbers only; decimal places as dot (comma is automatically converted to dot). Input field 3: Free text, max. 8 characters	**Y23**
Saturation limits instead of 3.8 ... 20.5 mA, example: 3.8 ... 22.0 mA Drop-down list 1: 3.9, 4 Drop-down list 2: 20.8, 22	**Y30**
Fault current instead of 3.6 mA [22.5 mA, 22.8 mA] Drop-down list: 3.75; 21.75; 22.5; 22.6	**Y31**
Damping in seconds instead of 2 s (0.0 ... 100.0 s) Input field: max. 4 characters and numbers only; decimal places as dot (comma is automatically converted to dot); min. value = 0; max. value = 100.	**Y32**
ID number of special version Input field: max. 4 characters and only natural numbers from 0 … 9999	**Y99**

© Siemens 2020

Dimensional drawings

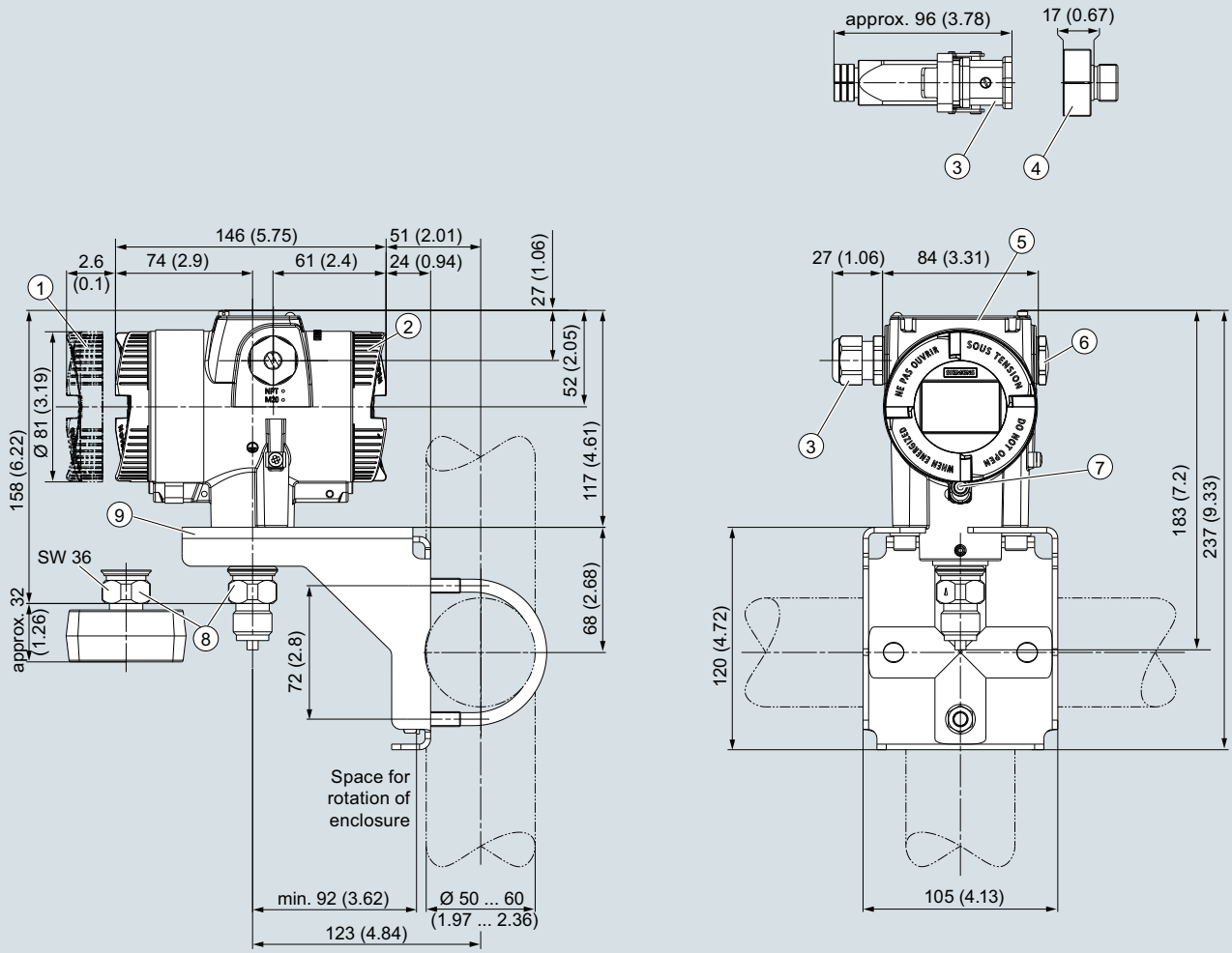

1. Electronics side, local display (longer overall length for cover with glass pane)[1]
2. Connection side
3. Electrical connection:
   - M20 x 1,5[3] screw gland
   - ½-14 NPT screw gland
   - Han 7D/Han 8D[2] [3] device plug
   - M12 device plug[2] [3]
4. Harting adapter
5. Cover over buttons and nameplate with general information
6. Blanking plug
7. Safety catch (only for "flameproof enclosure" type of protection)
8. Process connection: G½B connection pin or oval flange
9. Mounting bracket (optional)

[1] In addition, allow approx. 22 mm (0.87 inch) for the thread length when removing the covers
[2] Not with "flameproof enclosure" type of protection
[3] Not with type of protection "FM + CSA" [is + XP]"

SITRANS P320/P420 pressure transmitter for absolute pressure (pressure series), dimensions in mm (inch)

© Siemens 2020

Technical specifications

SITRANS P320 / SITRANS P420 for absolute pressure (differential pressure series)			
Input			
Measured variable	Absolute pressure		
Measuring span (infinitely adjustable) and maximum operating pressure (pursuant to Pressure Equipment Directive 2014/68/EU)	Measuring span	Max. permissible operating pressure MAWP (PS)	Maximum permissible test pressure
	8.3 … 250 mbar a	160 bar a	240 bar a
	0.83 ... 25 kPa a	16 MPa a	24 MPa a
	3.3 … 100.5 inH_2O a	2320 psi a	3481 psi a
	43 … 1300 mbar a	160 bar a	240 bar a
	4.3 ... 130 kPa a	16 MPa a	24 MPa a
	17.3 … 522 inH_2O a	2320 psi a	3481 psi a
	166 … 5000 mbar a	160 bar a	240 bar a
	16.6 ... 500 kPa a	16 MPa a	24 MPa a
	2.41 … 72.5 psi a	2320 psi a	3481 psi a
	1 … 30 bar a	160 bar a	240 bar a
	0.1 ... 3 MPa a	16 MPa a	24 MPa a
	14.5 … 435 psi a	2320 psi a	3481 psi a
	5 … 100 bar a	160 bar a	240 bar a
	0.5 ... 10 MPa a	16 MPa a	24 MPa a
	76.9 … 1450 psi a	2320 psi a	3481 psi a
Measuring limits			
• Low measuring limit			
- Measuring cell with silicone oil filling	0 mbar a/kPa a/psi a		
- Measuring cell with inert liquid	For temperature of medium -20-°C < ϑ ≤ +60 °C (-4 °F < ϑ ≤ +140 °F)		30 mbar a/3 kPa a/0.44 psi a
	For temperature of medium 60 °C < ϑ ≤ +100 °C (max. 85 °C for measuring cell 30 bar) (140 °F < ϑ ≤ +212 °F (max. 185 °F for measuring cell 435 psi))		30 mbar a + 20 mbar a · (ϑ - 60 °C)/°C 3 kPa a + 2 kPa a · (ϑ - 60 °C)/°C 0.44 psi a + 0.29 psi a · (ϑ - 140 °F)/°F
• Upper measuring limit	100% of the max. measuring span (for oxygen measurement max. 100 bar/10 MPa/ 1450 psi and 60 °C (140 °F) ambient temperature/temperature of medium)		
• Lower range value	Between the measuring limits (infinitely adjustable)		
Output	**HART**		
Output signal	4 ... 20 mA		
• Low saturation limit (infinitely adjustable)	3.55 mA, factory preset to 3.8 mA		
• High saturation limit (infinitely adjustable)	22.8 mA, factory-set to 20.5 mA or optionally 22.0 mA		
• Ripple (without HART communication)	I_{pp} ≤ 0.5% of max. output current		
Adjustable damping	0 … 100 s, continuously adjustable over remote operation 0 … 100 s, in increments of 0.1 s, adjustable over display		
• Current transmitter	3.55 … 22.8 mA		
• Failure signal	3.55 … 22.8 mA		
Load	Resistor R [Ω]		
• Without HART communication	R = (U_H - 10.5 V)/22.8 mA, U_H: Power supply in V		
• With HART communication	R = 230 … 1100 Ω (HART communicator (handheld)) R = 230 … 500 Ω (SIMATIC PDM)		
Characteristic curve	• Linearly increasing or linearly decreasing • Linear increase or decrease or according to the square root (only for differential pressure and flow)		
Physical bus	-		
Polarity-independent	-		
Measuring accuracy			
Reference conditions	• According to EN 60770-1 • Rising characteristic curve • Lower range value 0 bar/kPa/psi • Seal diaphragm stainless steel • Measuring cell with silicone oil filling • Room temperature 25 °C (77 °F)		

© Siemens 2020

SITRANS P320 / SITRANS P420 for absolute pressure (differential pressure series)	
Conformity error at limit point setting, including hysteresis and repeatability	
Measuring span ratio r (spread, Turn-Down)	r = maximum measuring span/set measuring span or nominal measuring range
• Linear characteristic (all measuring cells)	
- r ≤ 10	≤ 0.1%
- 10 < r ≤ 30	≤ 0.2%
Influence of ambient temperature (in % per 28 °C (50 °F))	
• 250 mbar a/25 kPa a/3.6 psi a	≤ (0.15 · r + 0.1)%
• 1300 mbar a/130 kPa a/18.8 psi a 5 bar a/500 kPa a/72.5 psi a 30 bar a/3000 kPa a/435 psi a 100 bar a/10 MPa a/1450 psi a	≤ (0.08 · r + 0.16)%
Long-term stability at ±30 °C (±54 °F)	In 5 years ≤ (0.25 · r)%
Step response time T_{63} (without electrical damping)	
• 250 mbar a/25 kPa a/3.6 psi a	Approx. 0.195 s
• 1300 mbar a/130 kPa a/18.8 psi a 5 bar a/500 kPa a/72.5 psi a 30 bar a/3000 kPa a/435 psi a 100 bar a/10 MPa a/1450 psi a	Approx. 0.145 s
Effect of mounting position (in pressure per change of angle)	≤ 0.7 mbar/0.07 kPa/0.010 psi per 10° incline (zero offset is possible with position error compensation)
Effect of auxiliary power (in % per voltage change)	0.005% per 1 V
Operating conditions	
Temperature of medium	
• Measuring cell with silicone oil filling	-40 … +100 °C (-40 … +212 °F)
- Measuring cell 30 bar (435 psi)	-20 … +100 °C (-4 … +212 °F)
- Measuring cell 100 bar (1450 psi)	-20 … +100 °C (-4 … +212 °F)
• Measuring cell with inert oil	-20 … +100 °C (-4 … +212 °F)
• In conjunction with dust explosion protection	-40 … +85 °C (-4 … +185 °F)
Ambient conditions	
• Ambient temperature/enclosure	Observe the temperature class in areas subject to explosion hazard.
- Measuring cell with silicone oil filling	-40 ... +85 °C (-40 ... +185 °F)
- Measuring cell with inert oil	-40 … +85 °C (-40 … +185 °F)
- Display	-20 … +80 °C (-4 … +176 °F)
• Storage temperature	-50 ... +85 °C (-58 ... +185 °F); with FDA-compliant oil: -20 ... + 85 °C (-4 ... +185 °F))
• Climatic class in accordance with IEC 60721-3-4	4K4H
• Degree of protection	
- According to IEC 60529	IP66, IP68
- According to NEMA 250	Type 4X
• Electromagnetic compatibility	
- Emitted interference and interference immunity	According to IEC 61326 and NAMUR NE 21
Design	
Weight	Approx. 3.9 kg (8.5 lb) with aluminum enclosure Approx. 5.8 kg (12.7 lb) with stainless steel enclosure
Material	
• Wetted parts materials	
- Seal diaphragm	Stainless steel, mat. no. 1.4404/316L, Alloy C276, mat. no. 2.4819, Monel, mat. no. 2.4360, tantalum or gold
- Process flanges and sealing plugs	Stainless steel, mat. no. 1.4408 to PN 160, mat. no. 1.4571/316Ti for PN 420, Alloy C22, 2.4602 or Monel, mat. no. 2.4360
- O-ring	FPM (Viton) or optionally: PTFE, FEP, FEPM and NBR
• Non-wetted parts materials	
- Electronics enclosure	• Low-copper die-cast aluminum GD-AlSi 12 or stainless steel precision casting, mat. no. 1.4409/ CF-3M • Standard: Powder coating with polyurethane Option: 2 coats: Coat 1: epoxy-based; coat 2: Polyurethane • Stainless steel type plate (1.4404/316L)
- Pressure flange screws	Stainless steel ISO 3506-1 A4-70
- Mounting bracket	Steel, electrogalvanized steel, or stainless steel
Process connection	¼-18 NPT female thread and flat connection with 7/16-20 UNF fastening screw thread in accordance with EN 61518 or M10 fastening screw thread in accordance with DIN 19213 (M12 for PN 420 (MWP 6092 psi))
Electrical connection	Screw terminals Cable entry via the following screwed glands: • M20 x 1.5 • ½-14 NPT • Device plug Han 7D/Han 8D[1)] • Device plug M12

© Siemens 2020

SITRANS P320 / SITRANS P420 for absolute pressure (differential pressure series)	
Displays and controls	
Keys	4 keys for operation directly on the device
Display	• With or without integrated display (optional) • Cover with inspection window (optional)
Auxiliary power U_H	
Terminal voltage on pressure transmitter	10.5 ... 45 V DC 10.5 ... 30 V DC in intrinsically safe mode
Ripple	$U_{SS} \leq 0.2$ V (47 … 125 Hz)
Noise	$U_{eff} \leq 1.2$ mV (0.5 … 10 kHz)
Auxiliary power	–
Separate supply voltage	–
Certificates and approvals	
Classification according to pressure equipment directive (PED 2014/68/EU)	For gases of fluid group 1 and liquids of fluid group 1; complies with requirements of article 4, paragraph 3 (sound engineering practice)
Drinking water	
• WRAS (England)	No.: 1903094 (option E83)
• ACS (France)	No.: 18 ACC LY 277 (option E85)
• NSF (USA)	No.: 20180920-MH61350 (option E84)
CRN (Canada)	No.: 0F9863.5C (option E60)
Explosion protection acc. to NEPSI (China)	No.: GYJ19.1058X (option E27)
Explosion protection acc. to INMETRO (Brazil)	No.: BRA-18-GE-0035X (option E25)
Explosion protection	
• Intrinsic safety "i"	
- Marking	II 1/2 G Ex ia/ib IIC T4/T6 Ga/Gb
- Permissible ambient temperature	-40 ... +80 °C (-40 ... +176 °F) temperature class T4 -40 ... +70 °C (-40 ... +158 °F) temperature class T6
- Permissible temperature of measuring medium	-40 ... +100 °C (-40 ... +212 °F) temperature class T4 -40 ... +70 °C (-40 ... +158 °F) temperature class T6
- Connection	To certified intrinsically safe circuits with peak values: U_i = 30 V, I_i = 101 mA, P_i = 760 mW U_i = 29 V, I_i = 110 mA, P_i = 800 mW
- Effective internal inductance/capacitance	L_i = 0.24 µH/C_i = 3.29 nF
• Flameproof enclosure "d"	
- Marking	Ex II 1/2 G Ex ia/db IIC T4/T6 Ga/Gb
- Permissible ambient temperature	-40 ... +80 °C (-40 ... +176 °F) temperature class T4 -40 ... +70 °C (-40 ... +158 °F) temperature class T6
- Permissible temperature of measuring medium	-40 ... +100 °C (-40 ... +212 °F) temperature class T4 -40 ... +70 °C (-40 ... +158 °F) temperature class T6
- Connection	To a circuit with the operating values: U_n = 10.5 to 45 V, 4 ... 20 mA
• Dust explosion protection for zones 21, 22	
- Marking	Ex II 2D Ex tb IIIC T120 °C Db Ex II 3D Ex tc IIIC T120 °C Dc
- Permissible ambient temperature	-40 ... +80 °C (-40 ... +176 °F)
- Permissible temperature of measuring medium	-40 ... +100 °C (-40 ... +212 °F)
- Max. surface temperature	120 °C (248 °F)
- Connection	To a circuit with the operating values: U_n = 10.5 to 45 V, 4 ... 20 mA
• Dust explosion protection for zones 20, 21, 22	
- Marking	Ex II 1D Ex ia IIIC T120 °C Da Ex II 2D Ex ib IIIC T120 °C Db
- Permissible ambient temperature	-40 ... +80 °C (-40 ... +176 °F)
- Permissible temperature of measuring medium	-40 ... +100 °C (-40 ... +212 °F)
- Connection	To certified intrinsically safe circuits with the peak values: U_i = 30 V, I_i = 101 mA, P_i = 760 mW U_i = 29 V, I_i = 110 mA, P_i = 800 mW
- Effective internal inductance/capacitance	L_i = 0.24 µH/C_i = 3.29 nF

© Siemens 2020

SITRANS P320 / SITRANS P420 for absolute pressure (differential pressure series)	
• Type of protection for Zone 2	
- Marking	Ex II 3G Ex ec IIC T4/T6 Gc
- Permissible ambient temperature "ec"	-40 ... +80 °C (-40 ... +176 °F) temperature class T4 -40 ... +40 °C (-40 ... +104 °F) temperature class T6
- Permissible temperature of measuring medium	-40 ... +100 °C (-40 ... +212 °F) temperature class T4 -40 ... +70 °C (-40 ... +158 °F) temperature class T6
- "ec" connection	To a circuit with the operating values: U_n = 10.5 to 30 V, 4 ... 20 mA
• Explosion protection acc. to FM	Available soon
- Marking (XP/DIP) or IS; NI; S	CL I, DIV 1, GP ABCD T4 ... T6; CL II, DIV 1, GP EFG; CL III; Ex ia IIC T4 ... T6: CL I, DIV 2, GP ABCD T4 ... T6; CL II, DIV 2, GP FG; CL III
• Explosion protection according to CSA	Available soon
- Marking (XP/DIP) or (IS)	CL I, DIV 1, GP ABCD T4 ... T6; CL II, DIV 1, GP EFG; CL III; Ex ia IIC T4 ... T6: CL I, DIV 2, GP ABCD T4 ... T6; CL II, DIV 2, GP FG; CL III
NAMUR recommendations	
• NE 06	Standardized Electrical Signals and Questions Relating to Engineering Technology
• NE 21	Electromagnetic Compatibility (EMC) of Industrial Process and Laboratory Control Equipment
• NE 23	Extra Low Voltage Circuits with Safe Separation
• NE 43	Standardization of the Signal Level for the Failure Information of Digital Transmitters
• NE 53	Software and Hardware of Field Devices and Signal Processing Devices with Digital Electronics
• NE 80	The Application of the Pressure Equipment Directive to Process Control Devices
• NE 105	Specifications for Integrating Fieldbus Devices in Engineering Tools for Field Devices
• NE 107	Self-Monitoring and Diagnosis of Field Devices
• NE 131	NAMUR Standard Device - Field Devices for Standard Applications

[1] Han 8D is identical to Han 8U.

HART communication	
HART	230 ... 1100 Ω
Protocol	HART 7
Software for computer	SIMATIC PDM

© Siemens 2020

Selection and ordering data

	Article No.
Pressure transmitters for absolute pressure (differential pressure series)	
SITRANS P320 ↗	**7MF033 ■ - ■■■■■ - ■■■■**
SITRANS P420 ↗	**7MF043 ■ - ■■■■■ - ■■■■**
↗ Click on the Article no. for the online configuration in the PIA Life Cycle Portal.	
Communication	
HART, 4 ... 20 mA	**0**
Measuring cell filling	
Silicone oil	**1**
Inert filling liquid	**3**
Maximum measuring span	
250 mbar a (100.5 inH_2O a)	**G**
1 300 mbar a (522 inH_2O a)	**L**
5000 mbar a (72.5 psi a)	**P**
30 bar a (435 psi a)	**R**
100 bar a (1450 psi a)	**U**
Process connection	
Oval flange, mounting thread: $^7/_{16}$-20 UNF (IEC 61518)	**Q**
Oval flange, mounting thread: M10 (DIN 19213)	**R**
Oval flange, mounting thread: $^7/_{16}$-20 UNF (IEC 61518) with lateral ventilation	**S**
Oval flange, mounting thread: M10 (DIN 19213) with lateral ventilation	**T**
Version for diaphragm seal with mounting thread $^7/_{16}$-20 UNF (IEC 61518)	**V**
Version for diaphragm seal with mounting thread M10 (DIN 19213)	**W**
Wetted parts materials: Process connection, seal diaphragm	
Stainless steel 316L/1.4404, stainless steel 316L/1.4404, process flange stainless steel 316/1.4408	**0**
Stainless steel 316L/1.4404, alloy C276/2.4819, process flange stainless steel 316/1.4408	**1**
Alloy C22/2.4602, alloy C276/2.4819, process flange stainless steel 316/1.4408	**2**
Tantalum/tantalum, process flange stainless steel 316/1.4408	**4**
Monel 00/2.4360, Monel 400/2.4360, process flange stainless steel 316/1.4408	**6**
Stainless steel 316L/1.4404, gold-plated, process flange stainless steel 316/1.4408	**8**
Non-wetted parts materials	
Die-cast aluminum	**1**
Stainless steel precision casting CF3M/1.4409 similar to 316L	**2**
Enclosure	
Dual chamber device	**5**
Type of protection	
Without Ex	**A**
Intrinsic safety	**B**
Flameproof enclosure	**C**
Flameproof enclosure, intrinsic safety	**D**
Dust protection by enclosure Zone 21/22 (DIP), increased safety Zone 2	**L**
Dust protection by enclosure Zone 20/21/22 (DIP), increased safety Zone 2	**M**
Combination of options B, C and L (zone model)	**S**
Combination of options B, C and M (zone model, Class Division)	**T**
Electrical connections/cable entries	
Thread for cable gland: Cable gland must be ordered separately as option (Axx)	
• 2 x M20 x 1.5	**F**
• 2 x ½-14 NPT	**M**
Local operation/display	
Without display (cover closed)	**0**
With display (cover closed)	**1**
With display (cover with glass pane)	**2**

© Siemens 2020

Selection and ordering data

Options	Order code
Append "-**Z**" to Article No., add order code and plain text or entry from drop-down list.	
Cable glands included	
Plastic	**A00**
Metal	**A01**
Stainless steel	**A02**
Stainless steel 316L/1.4404	**A03**
CMP, for XP devices	**A10**
CAPRI ADE 4F, CuZn, cable inner diameter 7 ... 12 mm, cable outer diameter 10 ... 16 mm	**A11**
CAPRI ADE 4F, stainless steel, cable inner diameter 7 ... 12 mm, cable outer diameter 10 ... 16 mm	**A12**
Device plug Han mounted left	
Device plug Han 7D (plastic, straight)	**A30**
Device plug Han 7D (plastic, angled)	**A31**
Device plug Han 7D (metal, straight)	**A32**
Device plug Han 7D (metal, angled)	**A33**
Device plug Han 8D (plastic, straight)	**A34**
Device plug Han 8D (plastic, angled)	**A35**
Device plug Han 8D (metal, straight)	**A36**
Device plug Han 8D (metal, angled)	**A37**
Cable socket included	
Plastic, for device plug Han 7D and Han 8D	**A40**
Metal, for device plug Han 7D and Han 8D	**A41**
Device plug M12 mounted left	
Stainless steel, without cable socket	**A62**
Stainless steel, with cable socket	**A63**
Cable entry/connector mounting	
2x sealing plugs M20 x 1.5, IP66/68 installed on both sides	**A90**
2x sealing plugs ½-14 NPT, IP66/68 installed on both sides	**A91**
Cable gland/connector mounted left	**A97**
Cable gland/connector mounted on right	**A99**
Nameplate labeling (standard labeling: English, unit bar)	
German (bar)	**B11**
French (bar)	**B12**
Spanish (bar)	**B13**
Italian (bar)	**B14**
Chinese (bar)	**B15**
Russian (bar)	**B16**
English (psi)	**B20**
English (Pa)	**B30**
Chinese (Pa)	**B35**
Certificates	
Quality test certificate, 5-point factory calibration (IEC 60770-2)	**C11**
Inspection certificate (EN 10204-3.1) - Material of pressurized and wetted parts	**C12**
Factory certificate - NACE (MR 0103-2012 and MR 0175-2009))	**C13**
Factory certificate (EN 10204-2.2) - Wetted parts	**C14**
Inspection certificate (EN 10204-3.1) - PMI test of pressurized and wetted parts	**C15**
Certificates for functional safety	
Functional safety (IEC 61508) - SIL2/3	**C20**

Options	Order code
Append "-**Z**" to Article No., add order code and plain text or entry from drop-down list.	
Device options	
PDF file with device settings	**D10**
Double layer coating (epoxy resin and polyurethane) 120 µm of enclosure and cover	**D20**
FVMQ enclosure sealing	**D21**
IP66/IP68 degree of protection (not for device plugs M12 and Han)	**D30**
TAG label empty	**D40**
Without labeling of the measuring range on the TAG label	**D41**
Stainless steel Ex plate 1.4404/316L	**D42**
Overvoltage protection up to 6 kV (external)	**D71**
Adhesive labels on transport packaging (supplied by customer)	**D90**
General approval without Ex approval	
Worldwide (CE, RCM) except EAC, FM, CSA, KCC	**E00**
Worldwide (CE, RCM, EAC, FM, CSA, KCC)	**E01**
CSA (USA and Canada)	**E06**
EAC	**E07**
FM	**E08**
KCC	**E09**
Export approval CPA (China)	**E12**
Explosion protection approvals	
ATEX (Europe)	**E20**
CSA (USA and Canada)	**E21**
FM (USA and Canada)	**E22**
IECEx (Worldwide)	**E23**
EACEx (GOST-R, -K, -B)	**E24**
INMETRO (Brazil)	**E25**
KCs (Korea)	**E26**
NEPSI (China)	**E27**
PESO (India)	**E28**
UKR Sepro (Ukraine)	**E30**
ATEX (Europe) and IECEx (Worldwide)	**E47**
CSA (Canada) and FM (USA)	**E48**
ATEX (Europe) and IECEx (Worldwide) + CSA (Canada) and FM (USA)	**E49**
Marine approvals	
DNV-GL (Det Norske Veritas/Germanischer Lloyd)	**E50**
LR (Lloyds Register)	**E51**
BV (Bureau Veritas)	**E52**
ABS (American Bureau of Shipping)	**E53**
RMR (Russian Maritime Register)	**E55**
KR (Korean Register of Shipping)	**E56**
RINA (Registro Italiano Navale)	**E57**
CCS (China Classification Society)	**E58**
Country-specific approvals	
CRN approval Canada (Canadian Registration Number)	**E60**

© Siemens 2020

Options	Order code
Append "-**Z**" to Article No., add order code and plain text or entry from drop-down list.	
Special approvals	
Oxygen application (with inert liquid, max. 100 bar (1 450 psi) at 60° C (140 °F))	**E80**
Dual seal	**E81**
WRC / WRAS (drinking water); only with pressure cap O-rings made of EPDM	**E83**
NSF61 (drinking water)	**E84**
ACS (drinking water)	**E85**
Mounting bracket	
Steel, galvanized	**H01**
Stainless steel 1.4301/304	**H02**
Stainless steel 1.4404/316L	**H03**
Process flanges; screw plug with vent valve	
Welded in on right	**J08**
Welded in on left	**J09**
Glued in on right	**J10**
Glued in on left	**J11**
Flange connections with flange EN 1092-1	
Form B1	
• DN 25 PN 40, stainless steel 1.4571/316Ti	**J70**
• DN 50 PN 40, stainless steel 1.4571/316Ti	**J71**
• DN 80 PN 40, stainless steel 1.4571/316Ti	**J72**
• DN 15 PN 40, stainless steel 1.4571/316Ti	**J78**
Form C	
• DN 25 PN 40, stainless steel 1.4571/316Ti	**J73**
• DN 50 PN 40, stainless steel 1.4571/316Ti	**J74**
• DN 80 PN 40, stainless steel 1.4571/316Ti	**J75**
Flange connection options	
Flange connection and temperature extension	**J76**
Flange connection with epoxy resin coating	**J77**
Process flanges; special materials	
Reserved for 7MF7: without process flanges, without screws, without gaskets	**K00**
Process flange material alloy C22/2.4602	**K01**
Process flange material Monel 400/2.4360	**K02**
Process connection material PVDF, on the side ½-14 NPT	**K05**
Process flanges/process connection material PVDF, flange on the side EN 1092-1 Form B1 DN 25 PN 40, MAWP 4 bar	**K06**
Process flanges/process connection material PVDF, flange on the side EN 1092-1 Form B1 DN 40 PN 40, MAWP 4 bar	**K07**
Process flanges; process connection option	
Process flange with process connection G½ welded on	**K20**
Process connection NAM (ASTAVA)	**K21**
Process flanges chambered with gaskets	
1x chambered, graphite	**K40**
1x chambered, PTFE	**K41**
2x chambered, PTFE	**K42**
Process flanges, gaskets (instead of standard gaskets FKM (FPM))	
O-ring, process flanges, PTFE	**K50**
O-ring, process flanges, FEP (with silicone core, approved for food)	**K51**
O-ring, process flanges, FFKM (FFPM)	**K52**
O-ring, process flanges, NBR	**K53**
O-ring, process flanges, EPDM	**K54**

Options	Order code
Append "-**Z**" to Article No., add order code and plain text or entry from drop-down list.	
Process flange options	
Process flanges for vertical differential pressure lines (half process flange)	**K81**
Process flanges (+) - side front	**K82**
Process flange screws, process flange nuts, material Monel 400/2.4360	**K83**
Valve ¼-18 NPT, material same as process flanges	**K84**
Valve mounted on the side, measured medium: Gas	**K85**
Oval flange enclosed, gasket PTFE + mounting screws	**K86**
Valve manifolds	
With mounted valve manifold (3-way) 7MF9411-5BA, PTFE sealing rings, chrome-plated steel screws and pressure test certified in factory certificate (EN 10204-2.2)	**U01**
With mounted valve manifold (3-way) 7MF9411-5BA, PTFE sealing rings, stainless steel screws and pressure test certified in factory certificate (EN 10204-2.2)	**U02**
With mounted valve manifold (5-way) 7MF9411-5CA, PTFE sealing rings, chrome-plated steel screws and pressure test certified in factory certificate (EN 10204-2.2)	**U03**
With mounted valve manifold (5-way) 7MF9411-5CA, PTFE sealing rings, stainless steel screws and pressure test certified in factory certificate (EN 10204-2.2)	**U04**

© Siemens 2020

Options	Order code
Append "-**Z**" to Article No., add order code and plain text or entry from drop-down list.	
Device settings	
Measuring span Lower range value (max. 5 characters), upper range value (max. 5 characters), unit [mbar, bar, kPa, MPa, psi, ...], example: -0.5 ... 10.5 psi Input field 1 and input field 2: max. 5 characters and numbers only; decimal places as dot (comma is automatically converted to dot). Drop-down list: Pa, MPa, kPa, hPa, bar, mbar, psi, g/cm^2, kg/cm^2, kgf/cm^2, inH_2O, inH_2O (4°C), ftH_2O, mmH_2O, mmH_2O (4°C), mH_2O (4°C), mmHg, inHg, atm, torr	**Y01**
TAG (on stainless steel plate and device parameters, max. 32 characters) Input field: Free text, max. 32 characters	**Y15**
Measuring point description (on stainless steel plate and device parameters, max. 32 characters) Input field: Free text, max. 32 characters	**Y16**
TAG short (device parameters, max. 8 characters) Input field: Free text, max. 8 characters	**Y17**
Local display [Pressure, Percent], reference [None, Absolute, Relative], example: Pressure gauge Drop-down list: Percent, pressure unit, pressure unit abs., pressure unit gauge	**Y21**
Local display Scaling with standard units [m^3/s, l/s, m, inch, ...], example 1 ... 5 m Input field 1 and input field 2: max. 5 characters and numbers only; decimal places as dot (comma is automatically converted to dot). Drop-down list: m, cm, mm, in, ft, m^3, l, hl, in^3, ft^3, yd^3, gal, gal (UK), bu, bbl, bbl (US), SCF, Nm^3, Nl.	**Y22**
Local display Scaling with user-specific units (max. 12 characters), example 1 ... 5 m Input field 1 and input field 2: max. 5 characters and numbers only; decimal places as dot (comma is automatically converted to dot). Input field 3: Free text, max. 8 characters	**Y23**
Saturation limits instead of 3.8 ... 20.5 mA, example: 3.8 ... 22.0 mA Drop-down list 1: 3.9, 4 Drop-down list 2: 20.8, 22	**Y30**
Fault current instead of 3.6 mA [22.5 mA, 22.8 mA] Drop-down list: 3.75; 21.75; 22.5; 22.6	**Y31**
Damping in seconds instead of 2 s (0.0 ... 100.0 s) Input field: max. 4 characters and numbers only; decimal places as dot (comma is automatically converted to dot); min. value = 0; max. value = 100.	**Y32**
ID number of special version Input field: max. 4 characters and only natural numbers from 0 … 9999	**Y99**

© Siemens 2020

Dimensional drawings

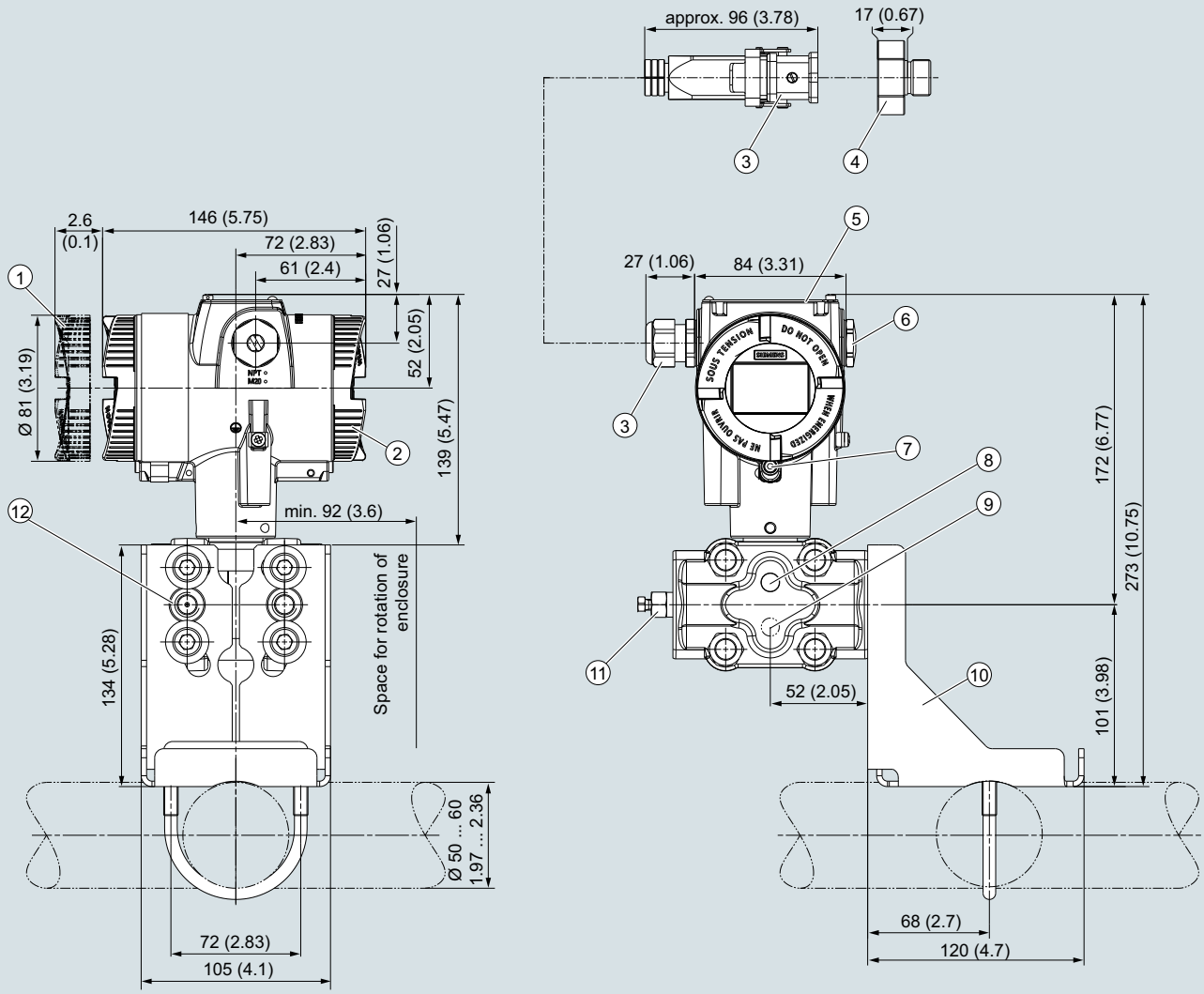

1. Electronics side, local display (longer overall length for cover with glass pane)[1]
2. Connection side
3. Electrical connection:
   - M20 x 1,5[3] screw gland
   - ½-14 NPT screw gland
   - Han 7D/Han 8D[2] [3] device plug
   - M12 device plug[2] [3]
4. Harting adapter
5. Cover over buttons and nameplate with general information
6. Blanking plug
7. Safety catch (only for "flameproof enclosure" type of protection)
8. Lateral ventilation for liquid measurement (Standard)
9. Lateral ventilation for gas measurement (order option K85)
10. Mounting bracket (optional)
11. Sealing plug with valve (optional)
12. Process connection: ¼-18 NPT (IEC 61518)

[1] In addition, allow approx. 22 mm (0.87 inch) for the thread length when removing the covers
[2] Not with "flameproof enclosure" type of protection
[3] Not with type of protection "FM + CSA" [is + XP]"

SITRANS P320/P420 pressure transmitter for absolute pressure (differential pressure series), dimensions in mm (inch)

© Siemens 2020

Technical specifications

SITRANS P320 / SITRANS P420 for differential pressure and flow			
Input			
Measured variable	Differential pressure and flow		
Measuring span (infinitely adjustable) and maximum operating pressure (pursuant to Pressure Equipment Directive 2014/68/EU)	Measuring span	Max. permissible operating pressure MAWP (PS)	Maximum permissible test pressure
	1 ... 20 mbar	160 bar	240 bar
	0.1 ... 2 kPa	16 MPa	24 MPa
	0.4019 … 8.037 inH_2O	2320 psi	3481 psi
	1 ... 60 mbar	160 bar	240 bar
	0.1 ... 6 kPa	16 MPa	24 MPa
	0.4019 … 24.11 inH_2O	2320 psi	3481 psi
	2.5 ... 250 mbar	160 bar	240 bar
	0.2 ... 25 kPa	16 MPa	24 MPa
	1.005 … 100.5 inH_2O	2320 psi	3481 psi
	6 ... 600 mbar	160 bar	240 bar
	0.6 ... 60 kPa	16 MPa	24 MPa
	2.41 … 241.1 inH_2O	2320 psi	3481 psi
	16 ... 1600 mbar	160 bar	240 bar
	1.6 ... 160 kPa	16 MPa	24 MPa
	6.43 … 643 inH_2O	2320 psi	3481 psi
	50 ... 5000 mbar	160 bar	240 bar
	5 ... 500 kPa	16 MPa	24 MPa
	20.09 … 2009 inH_2O	2320 psi	3481 psi
	0.3 ... 30 bar	160 bar	240 bar
	0.03 ... 3 MPa	16 MPa	24 MPa
	4.35 … 435 psi	2320 psi	3481 psi
	2.5 ... 250 mbar	420 bar	630 bar
	0.25 ... 25 kPa	42 MPa	63 MPa
	1.005 … 100.5 inH_2O	6092 psi	9137 psi
	6 ... 600 mbar	420 bar	630 bar
	0.6 ... 60 kPa	42 MPa	63 MPa
	2.41 … 241.1 inH_2O	6092 psi	9137 psi
	16 ... 1600 mbar	420 bar	630 bar
	1.6 ... 160 kPa	42 MPa	63 MPa
	6.43 … 643 inH_2O	6092 psi	9137 psi
	50 ... 5000 mbar	420 bar	630 bar
	5 ... 500 kPa	42 MPa	63 MPa
	20.09 … 2009 inH_2O	6092 psi	9137 psi
	0.3 ... 30 bar	420 bar	630 bar
	0.03 ... 3 MPa	42 MPa	63 MPa
	4.35 … 435 psi	6092 psi	9137 psi
Measuring limits			
• Low measuring limit			
- Measuring cell with silicone oil filling	-100% of the maximum measuring span (-33% for measuring cell 30 bar/3 MPa/435 psi PN 420) or 30 mbar a /3 kPa a /0.44 psi a		
- Measuring cell with inert liquid			
	For temperature of medium -20 °C < ϑ ≤ +60 °C (-4 °F < ϑ ≤ +140 °F)	-100% of maximum measuring range or 30 mbar a /3 kPa a /0.44 psi a	
	For temperature of medium 60 °C < ϑ ≤ +100 °C (max. 85 °C for measuring cell 30 bar with PN 420) (140 °F < ϑ ≤ +212 °F (max. 185 °F for measuring cell 435 psi))	-100% of maximum measuring range or 30 mbar a /3 kPa a /0.44 psi a 30 mbar a + 20 mbar a · (ϑ - 60 °C)/°C 3 kPa a + 2 kPa a · (ϑ - 60 °C)/°C0.44 psi a + 0.29 psi a · (ϑ - 140 °F)/°F	
- Measuring cell with FDA-compliant oil	For temperature of medium -10 °C < ϑ ≤ +100 °C (-14 °F < ϑ ≤ +212 °F)	-100% of maximum measuring range or 100 mbar a /10 kPa a /14.5 psi a	
• Upper measuring limit	100% of the max. measuring span (for oxygen measurement max. 100 bar/10 MPa/ 1450 psi and 60 °C (140 °F) ambient temperature/temperature of medium)		
• Lower range value	Between the measuring limits (infinitely adjustable)		

© Siemens 2020

SITRANS P320 / SITRANS P420 for differential pressure and flow		
Output	**HART**	
Output signal	4 ... 20 mA	
• Low saturation limit (infinitely adjustable)	3.55 mA, factory preset to 3.8 mA	
• High saturation limit (infinitely adjustable)	22.8 mA, factory-set to 20.5 mA or optionally 22.0 mA	
• Ripple (without HART communication)	I_{pp} ≤ 0.5% of max. output current	
Adjustable damping	0 … 100 s, continuously adjustable over remote operation	
	0 … 100 s, in increments of 0.1 s, adjustable over display	
• Current transmitter	3.55 … 22.8 mA	
• Failure signal	3.55 … 22.8 mA	
Load	Resistor R [Ω]	
• Without HART communication	R = (U_H - 10.5 V)/22.8 mA, U_H: Power supply in V	
• With HART communication	R = 230 … 1100 Ω (HART communicator (handheld))	
	R = 230 … 500 Ω (SIMATIC PDM)	
Characteristic curve	• Linearly increasing or linearly decreasing • Linear increase or decrease or according to the square root (only for differential pressure and flow)	
Physical bus	-	
Polarity-independent	-	
Measuring accuracy		
Reference conditions	• According to EN 60770-1 • Rising characteristic curve • Lower range value 0 bar/kPa/psi • Seal diaphragm stainless steel • Measuring cell with silicone oil filling • Room temperature 25 °C (77 °F)	
Conformity error at limit point setting, including hysteresis and repeatability		
Measuring span ratio r (spread, Turn-Down)	r = maximum measuring span/set measuring span or nominal measuring range	
• Linear characteristic		
- 20 mbar/2 kPa/0.29 psi	r ≤ 5: 5 < r ≤ 20:	≤ 0.075% ≤ (0.005 · r + 0.05)%
- 60 mbar/6 kPa/0.87 psi	r ≤ 5: 5 < r ≤ 60:	≤ 0.075% ≤ (0.005 · r + 0.05)%
- 250 mbar/25 kPa/3.63 psi 600 mbar/60 kPa/8.7 psi 1600 mbar/160 kPa/23.21 psi 5 bar/500 kPa/72.5 psi 30 bar/3 MPa/435 psi	r ≤ 5: 5 < r ≤ 100:	≤ 0.065% (SITRANS P320) ≤ (0.004 · r + 0.045)% (SITRANS P320)
- 250 mbar/25 kPa/3.63 psi (PN 160) 600 mbar/60 kPa/8.7 psi 1600 mbar/160 kPa/23.21 psi 5 bar/500 kPa/72.5 psi 30 bar/3 MPa/435 psi	r ≤ 5: 5 < r ≤ 100:	≤ 0.04% (SITRANS P420) ≤ (0.004 · r + 0.045)% (SITRANS P420)
- 250 mbar/25 kPa/3.63 psi (PN 420)	r ≤ 5:	≤ 0.065% (SITRANS P420)
• Square-rooted characteristic (flow > 50%)		
- 20 mbar/2 kPa/0.29 psi	r ≤ 5: 5 < r ≤ 20:	≤ 0.075% ≤ (0.005 · r + 0.05)%
- 60 mbar/6 kPa/0.87 psi	r ≤ 5: 5 < r ≤ 60:	≤ 0.075% ≤ (0.005 · r + 0.05)%
- 250 mbar/25 kPa/3.63 psi 600 mbar/60 kPa/8.7 psi 1600 mbar/160 kPa/23.21 psi 5 bar/500 kPa/72.5 psi 30 bar/3 MPa/435 psi	r ≤ 5: 5 < r ≤ 100:	≤ 0.065% (SITRANS P320) ≤ 0.04% (SITRANS P420) ≤ (0.004 · r + 0.045)%
• Square-rooted characteristic (flow 25 ... 50%)		
- 20 mbar/2 kPa/0.29 psi	r ≤ 5: 5 < r ≤ 20:	≤ 0.15% ≤ (0.01 · r + 0.1)%
- 60 mbar/6 kPa/0.87 psi	r ≤ 5: 5 < r ≤ 60:	≤ 0.15% ≤ (0.01 · r + 0.1)%
- 250 mbar/25 kPa/3.63 psi 600 mbar/60 kPa/8.7 psi 1600 mbar/160 kPa/23.21 psi 5 bar/500 kPa/72.5 psi 30 bar/3 MPa/435 psi	r ≤ 5: 5 < r ≤ 100:	≤ 0.13% (SITRANS P320) ≤ 0.08% (SITRANS P420) ≤ (0.008 · r + 0.09)%

© Siemens 2020

SITRANS P320 / SITRANS P420 for differential pressure and flow	
Influence of ambient temperature (in % per 28 °C (50 °F))	
- 20 mbar/2 kPa/0.29 psi	≤ (0.15 · r + 0.1)%
- 60 mbar/6 kPa/0.87 psi	≤ (0.075 · r + 0.1)%
- 250 mbar/25 kPa/3.63 psi 600 mbar/60 kPa/8.7 psi 1600 mbar/160 kPa/23.21 psi 5 bar/500 kPa/72.5 psi 30 bar/3 MPa/435 psi	≤ (0.025 · r + 0.125)% (SITRANS P320)
- 250 mbar/25 kPa/3.63 psi 5 bar/500 kPa/72.5 psi	≤ (0.025 · r + 0.0625)% (SITRANS P420)
- 600 mbar/60 kPa/8.7 psi 1600 mbar/160 kPa/23.21 psi 30 bar/3 MPa/435 psi	≤ (0.0125 · r + 0.0625)% (SITRANS P420)
Effect of static pressure	
• on the lower range value	Zero-point correction is possible with position error compensation
- 20 mbar/2 kPa/0.29 psi	≤ (0.3 · r)% per 70 bar (SITRANS P320) ≤ (0.2 · r)% per 70 bar (SITRANS P420)
- 60 mbar/6 kPa/0.87 psi 250 mbar/25 kPa/3.63 psi 600 mbar/60 kPa/8.7 psi 1600 mbar/160 kPa/23.21 psi 30 bar/3 MPa/435 psi	≤ (0.1 · r)% per 70 bar
- 5 bar/500 kPa/72.5 psi	≤ (0.15 · r)% per 70 bar
• on the measuring span	
- 20 mbar/2 kPa/0.29 psi	≤ 0.2% per 70 bar
- 60 mbar/6 kPa/0.87 psi 250 mbar/25 kPa/3.63 psi 600 mbar/60 kPa/8.7 psi 1600 mbar/160 kPa/23.21 psi 5 bar/500 kPa/72.5 psi 30 bar/3 MPa/435 psi	≤ 0.1% per 70 bar
Long-term stability at ±30 °C (±54 °F)	Static pressure max. 70 bar/7 MPa/1015 psi
• 20 mbar/2 kPa/0.29 psi	≤ (0.2 · r)% per year
• 60 mbar/6 kPa/0.87 psi	In 5 years ≤ (0.25 · r)%
• 250 mbar/25 kPa/3.63 psi 600 mbar/60 kPa/8.7 psi 1600 mbar/160 kPa/23.21 psi 5 bar/500 kPa/72.5 psi	In 5 years ≤ (0.125 · r)% In 10 years ≤ (0.15 · r)%
• 30 bar/3 MPa/435 psi	In 5 years ≤ (0.25 · r)% In 10 years ≤ (0.35 · r)%
Step response time T_{63} (without electrical damping for pressure rating PN 1600)	
• 20 mbar/2 kPa/0.29 psi	Approx. 0.160 s
• 60 mbar/6 kPa/0.87 psi	Approx. 0.150 s
• 250 mbar/25 kPa/3.63 psi 600 mbar/60 kPa/8.7 psi 1600 mbar/160 kPa/23.21 psi 5 bar/500 kPa/72.5 psi 30 bar/3 MPa/435 psi	Approx. 0.135 s
Effect of mounting position (in pressure per change of angle)	≤ 0.7 mbar/0.07 kPa/0.028 inH_2O per 10° incline (zero point correction is possible with position error compensation)
Effect of auxiliary power (in % per voltage change)	0.005% per 1 V

© Siemens 2020

SITRANS P320 / SITRANS P420 for differential pressure and flow	
Operating conditions	
Temperature of medium	
• Measuring cell with silicone oil filling	-40 … +100 °C (-40 … +212 °F)
- Measuring cell 30 bar (435 psi)	-20 … +100 °C (-4 … +212 °F)
• Measuring cell with inert oil	-20 … +100 °C (-4 … +212 °F)
• Measuring cell with FDA-compliant oil	-10 … +100 °C (14 … +212 °F)
• In conjunction with dust explosion protection	-40 … +85 °C (-4 … +185 °F)
Ambient conditions	
• Ambient temperature/enclosure	Observe the temperature class in areas subject to explosion hazard.
- Measuring cell with silicone oil filling	-40 ... +85 °C (-40 ... +185 °F)
- Measuring cell with inert oil	-40 … +85 °C (-40… +185 °F)
- Measuring cell with FDA-compliant oil	-10 … +85 °C (14 … +185 °F)
- Display	-20 … +80 °C (-4 … +176 °F)
• Storage temperature	-50 ... +85 °C (-58 ... +185 °F) (with FDA-compliant oil: -20 ... + 85 °C (-4 ... +185 °F))
• Climatic class in accordance with IEC 60721-3-4	4K4H
• Degree of protection	
- According to IEC 60529	IP66, IP68
- According to NEMA 250	Type 4X
• Electromagnetic compatibility	
- Emitted interference and interference immunity	According to IEC 61326 and NAMUR NE 21
Design	
Weight	Approx. 3.9 kg (8.5 lb) with aluminum enclosure Approx. 5.8 kg (12.7 lb) with stainless steel enclosure
Material	
• Wetted parts materials	
- Seal diaphragm	Stainless steel, mat. no. 1.4404/316L, Alloy C276, mat. no. 2.4819, Monel, mat. no. 2.4360, tantalum or gold
- Process flanges and sealing plugs	Stainless steel, mat. no. 1.4408 to PN 160, mat. no. 1.4571/316Ti for PN 420, Alloy C22, 2.4602 or Monel, mat. no. 2.4360
- O-ring	FPM (Viton) or optionally: PTFE, FEP, FEPM and NBR
• Non-wetted parts materials	
- Electronics enclosure	• Low-copper die-cast aluminum GD-AlSi 12 or stainless steel precision casting, mat. no. 1.4409/ CF-3M • Standard: Powder coating with polyurethane Option: 2 coats: Coat 1: epoxy-based; coat 2: Polyurethane • Stainless steel type plate (1.4404/316L)
- Pressure flange screws	Stainless steel ISO 3506-1 A4-70
- Mounting bracket	Steel, electrogalvanized steel, or stainless steel
Process connection	¼-18 NPT female thread and flat connection with 7/16-20 UNF fastening screw thread in accordance with EN 61518 or M10 fastening screw thread in accordance with DIN 19213 (M12 for PN 420 (MWP 6092 psi))
Electrical connection	Screw terminals Cable entry via the following screwed glands: • M20 x 1.5 • ½-14 NPT • Device plug Han 7D/Han 8D[1)] • Device plug M12
Displays and controls	
Keys	4 keys for operation directly on the device
Display	• With or without integrated display (optional) • Cover with inspection window (optional)
Auxiliary power U_H	
Terminal voltage on pressure transmitter	10.5 ... 45 V DC 10.5 ... 30 V DC in intrinsically safe mode
Ripple	$U_{SS} \leq 0.2$ V (47 … 125 Hz)
Noise	$U_{eff} \leq 1.2$ mV (0.5 … 10 kHz)
Auxiliary power	–
Separate supply voltage	–

© Siemens 2020

SITRANS P320 / SITRANS P420 for differential pressure and flow	
Certificates and approvals	
Classification according to pressure equipment directive (PED 2014/68/EU)	For gases of fluid group 1 and liquids of fluid group 1; complies with requirements of article 4, paragraph 3 (sound engineering practice) **For flow only** For gases of fluid group 1 and liquids of fluid group 1; fulfills the basic safety requirements as per article 3, paragraph 1 (appendix 1); classified as category III, module H conformity evaluation by TÜV Nord
Drinking water	
• WRAS (England)	No.: 1903094 (option E83)
• ACS (France)	No.: 18 ACC LY 277 (option E85)
• NSF (USA)	No.: 20180920-MH61350 (option E84)
CRN (Canada)	No.: 0F9863.5C (option E60)
Explosion protection acc. to NEPSI (China)	No.: GYJ19.1058X (option E27)
Explosion protection acc. to INMETRO (Brazil)	No.: BRA-18-GE-0035X (option E25)
Explosion protection	
• Intrinsic safety "i"	
- Marking	II 1/2 G Ex ia/ib IIC T4/T6 Ga/Gb
- Permissible ambient temperature	-40 ... +80 °C (-40 ... +176 °F) temperature class T4 -40 ... +70 °C (-40 ... +158 °F) temperature class T6
- Permissible temperature of measuring medium	-40 ... +100 °C (-40 ... +212 °F) temperature class T4 -40 ... +70 °C (-40 ... +158 °F) temperature class T6
- Connection	To certified intrinsically safe circuits with peak values: U_i = 30 V, I_i = 101 mA, P_i = 760 mW U_i = 29 V, I_i = 110 mA, P_i = 800 mW
- Effective internal inductance/capacitance	L_i = 0.24 µH/C_i = 3.29 nF
• Flameproof enclosure "d"	
- Marking	Ex II 1/2 G Ex ia/db IIC T4/T6 Ga/Gb
- Permissible ambient temperature	-40 ... +80 °C (-40 ... +176 °F) temperature class T4 -40 ... +70 °C (-40 ... +158 °F) temperature class T6
- Permissible temperature of measuring medium	-40 ... +100 °C (-40 ... +212 °F) temperature class T4 -40 ... +70 °C (-40 ... +158 °F) temperature class T6
- Connection	To a circuit with the operating values: U_n = 10.5 to 45 V, 4 ... 20 mA
• Dust explosion protection for zones 21, 22	
- Marking	Ex II 2D Ex tb IIIC T120 °C Db Ex II 3D Ex tc IIIC T120 °C Dc
- Permissible ambient temperature	-40 ... +80 °C (-40 ... +176 °F)
- Permissible temperature of measuring medium	-40 ... +100 °C (-40 ... +212 °F)
- Max. surface temperature	120 °C (248 °F)
- Connection	To a circuit with the operating values: U_n = 10.5 to 45 V, 4 ... 20 mA
• Dust explosion protection for zones 20, 21, 22	
- Marking	Ex II 1D Ex ia IIIC T120 °C Da Ex II 2D Ex ib IIIC T120 °C Db
- Permissible ambient temperature	-40 ... +80 °C (-40 ... +176 °F)
- Permissible temperature of measuring medium	-40 ... +100 °C (-40 ... +212 °F)
- Connection	To certified intrinsically safe circuits with the peak values: U_i = 30 V, I_i = 101 mA, P_i = 760 mW U_i = 29 V, I_i = 110 mA, P_i = 800 mW
- Effective internal inductance/capacitance	L_i = 0.24 µH/C_i = 3.29 nF
• Type of protection for Zone 2	
- Marking	Ex II 3G Ex ec IIC T4/T6 Gc
- Permissible ambient temperature "ec"	-40 ... +80 °C (-40 ... +176 °F) temperature class T4 -40 ... +40 °C (-40 ... +104 °F) temperature class T6
- Permissible temperature of measuring medium	-40 ... +100 °C (-40 ... +212 °F) temperature class T4 -40 ... +70 °C (-40 ... +158 °F) temperature class T6
- "ec" connection	To a circuit with the operating values: U_n = 10.5 to 30 V, 4 ... 20 mA

© Siemens 2020

SITRANS P320 / SITRANS P420 for differential pressure and flow	
• Explosion protection acc. to FM	Available soon
- Marking (XP/DIP) or IS; NI; S	CL I, DIV 1, GP ABCD T4 ... T6; CL II, DIV 1, GP EFG; CL III; Ex ia IIC T4 ... T6: CL I, DIV 2, GP ABCD T4 ... T6; CL II, DIV 2, GP FG; CL III
• Explosion protection according to CSA	Available soon
- Marking (XP/DIP) or (IS)	CL I, DIV 1, GP ABCD T4 ... T6; CL II, DIV 1, GP EFG; CL III; Ex ia IIC T4 ... T6: CL I, DIV 2, GP ABCD T4 ... T6; CL II, DIV 2, GP FG; CL III
NAMUR recommendations	
• NE 06	Standardized Electrical Signals and Questions Relating to Engineering Technology
• NE 21	Electromagnetic Compatibility (EMC) of Industrial Process and Laboratory Control Equipment
• NE 23	Extra Low Voltage Circuits with Safe Separation
• NE 43	Standardization of the Signal Level for the Failure Information of Digital Transmitters
• NE 53	Software and Hardware of Field Devices and Signal Processing Devices with Digital Electronics
• NE 80	The Application of the Pressure Equipment Directive to Process Control Devices
• NE 105	Specifications for Integrating Fieldbus Devices in Engineering Tools for Field Devices
• NE 107	Self-Monitoring and Diagnosis of Field Devices
• NE 131	NAMUR Standard Device - Field Devices for Standard Applications

HART communication	
HART	230 ... 1100 Ω
Protocol	HART 7
Software for computer	SIMATIC PDM

© Siemens 2020

Selection and ordering data

	Article No.
Pressure transmitters for differential pressure and flow, PN 160 (MAWP 2320 psi)	
SITRANS P320	↗ **7MF034■-■■■■■-■■■■**
SITRANS P420	↗ **7MF044■-■■■■■-■■■■**
↗ Click on the Article no. for the online configuration in the PIA Life Cycle Portal.	
Communication	
HART, 4 ... 20 mA	**0**
Measuring cell filling	
Silicone oil	**1**
Inert liquid	**3**
Neobee oil	**4**
Maximum measuring span	
20 mbar (8.037 inH_2O)	**B**
60 mbar (24.11 inH_2O)	**D**
250 mbar (100.5 inH_2O)	**G**
600 mbar (241.1 inH_2O)	**H**
1 600 mbar (643 inH_2O)	**M**
5000 mbar (2009 inH_2O)	**P**
30 bar (435 psi)	**R**
Process connection	
Oval flange, mounting thread: $^7/_{16}$-20 UNF (IEC 61518)	**L**
Oval flange, mounting thread: M10 (PN 160) (DIN 19213)	**M**
Oval flange, mounting thread: $^7/_{16}$-20 UNF (IEC 61518) with lateral ventilation	**N**
Oval flange, mounting thread: M10 (PN 160) (DIN 19213) with lateral ventilation	**P**
Version for diaphragm seal with mounting thread $^7/_{16}$-20 UNF (IEC 61518)	**V**
Version for diaphragm seal with mounting thread M10 (DIN 19213)	**W**
Version for diaphragm seal (level and capillary) with mounting thread $^7/_{16}$-20 UNF (IEC 61518)	**X**
Wetted parts materials: Process connection, seal diaphragm	
Stainless steel 316L/1.4404, stainless steel 316L/1.4404, process flange stainless steel 316/1.4408	**0**
Stainless steel 316L/1.4404, alloy C276/2.4819, process flange stainless steel 316/1.4408	**1**
Alloy C22/2.4602, alloy C276/2.4819, process flange stainless steel 316/1.4408	**2**
Tantalum/tantalum, process flange stainless steel 316/1.4408 (not in combination with maximum measuring span 20 mbar (0.29 psi) and 60 mbar (0.87 psi))	**4**
Monel 00/2.4360, Monel 400/2.4360, process flange stainless steel 316/1.4408 (not in combination with maximum measuring span 20 mbar (0.29 psi) and 60 mbar (0.87 psi))	**6**
Stainless steel 316L/1.4404, gold-plated, process flange stainless steel 316/1.4408 (not in combination with maximum measuring span 20 mbar (0.29 psi) and 60 mbar (0.87 psi))	**8**
Non-wetted parts materials	
Die-cast aluminum	**1**
Stainless steel precision casting CF3M/1.4409 similar to 316L	**2**
Enclosure	
Dual chamber device	**5**
Type of protection	
Without Ex	**A**
Intrinsic safety	**B**
Flameproof enclosure	**C**
Flameproof enclosure, intrinsic safety	**D**
Dust protection by enclosure Zone 21/22 (DIP), increased safety Zone 2	**L**
Dust protection by enclosure Zone 20/21/22 (DIP), increased safety Zone 2	**M**
Combination of options B, C and L (zone model)	**S**
Combination of options B, C and M (zone model, Class Division)	**T**
Electrical connections/cable entries	
Thread for cable gland: Cable gland must be ordered separately as option (Axx)	
• 2 x M20 x 1.5	**F**
• 2 x ½-14 NPT	**M**

© Siemens 2020

	Article No.
Pressure transmitters for differential pressure and flow, PN 160 (MAWP 2320 psi)	
SITRANS P320	**7MF034 ■ - ■■■■■ - ■■■■**
SITRANS P420	**7MF044 ■ - ■■■■■ - ■■■■**
Local operation/display	
Without display (cover closed)	**0**
With display (cover closed)	**1**
With display (cover with glass pane)	**2**

© Siemens 2020

	Article No.
Pressure transmitters for differential pressure and flow, PN 420 (MAWP 6092 psi)	
SITRANS P320 ↗	**7MF035■-■■■■■-■■■■**
SITRANS P420 ↗	**7MF045■-■■■■■-■■■■**
↗ Click on the Article no. for the online configuration in the PIA Life Cycle Portal.	
Communication	
HART, 4 ... 20 mA	**0**
Measuring cell filling	
Silicone oil	**1**
Inert liquid	**3**
Neobee oil	**4**
Maximum measuring span	
250 mbar (100.5 inH_2O)	**G**
600 mbar (241.1 inH_2O)	**H**
1 600 mbar (643 inH_2O)	**M**
5000 mbar (2009 inH_2O)	**P**
30 bar (435 psi)	**R**
Process connection	
Oval flange, mounting thread: $^7/_{16}$-20 UNF (IEC 61518)	**L**
Oval flange, mounting thread: M12 (PN 420) (DIN 19213)	**M**
Oval flange, mounting thread: $^7/_{16}$-20 UNF (IEC 61518) with lateral ventilation	**N**
Oval flange, mounting thread: M12 (PN 420) (DIN 19213) with lateral ventilation	**P**
Version for diaphragm seal with mounting thread $^7/_{16}$-20 UNF (IEC 61518)	**V**
Version for diaphragm seal with mounting thread M10 (DIN 19213)	**W**
Version for diaphragm seal (level and capillary) with mounting thread $^7/_{16}$-20 UNF (IEC 61518)	**X**
Wetted parts materials: Process connection, seal diaphragm	
Stainless steel 316L/1.4404, stainless steel 316L/1.4404, process flange stainless steel 316/1.4408	**0**
Stainless steel 316L/1.4404, alloy C276/2.4819, process flange stainless steel 316/1.4408	**1**
Stainless steel 316L/1.4404, gold-plated, process flange stainless steel 316/1.4408	**8**
Non-wetted parts materials	
Die-cast aluminum	**1**
Stainless steel precision casting CF3M/1.4409 similar to 316L	**2**
Enclosure	
Dual chamber device	**5**
Type of protection	
Without Ex	**A**
Intrinsic safety	**B**
Flameproof enclosure	**C**
Flameproof enclosure, intrinsic safety	**D**
Dust protection by enclosure Zone 21/22 (DIP), increased safety Zone 2	**L**
Dust protection by enclosure Zone 20/21/22 (DIP), increased safety Zone 2	**M**
Combination of options B, C and L (zone model)	**S**
Combination of options B, C and M (zone model, Class Division)	**T**
Electrical connections/cable entries	
Thread for cable gland: Cable gland must be ordered separately as option (Axx)	
• 2 x M20 x 1.5	**F**
• 2 x ½-14 NPT	**M**
Local operation/display	
Without display (cover closed)	**0**
With display (cover closed)	**1**
With display (cover with glass pane)	**2**

© Siemens 2020

Selection and ordering data

Options	Order code
Append "-**Z**" to Article No., add order code and plain text or entry from drop-down list.	
Cable glands included	
Plastic	**A00**
Metal	**A01**
Stainless steel	**A02**
Stainless steel 316L/1.4404	**A03**
CMP, for XP devices	**A10**
CAPRI ADE 4F, CuZn, cable inner diameter 7 ... 12 mm, cable outer diameter 10 ... 16 mm	**A11**
CAPRI ADE 4F, stainless steel, cable inner diameter 7 ... 12 mm, cable outer diameter 10 ... 16 mm	**A12**
Device plug Han mounted left	
Device plug Han 7D (plastic, straight)	**A30**
Device plug Han 7D (plastic, angled)	**A31**
Device plug Han 7D (metal, straight)	**A32**
Device plug Han 7D (metal, angled)	**A33**
Device plug Han 8D (plastic, straight)	**A34**
Device plug Han 8D (plastic, angled)	**A35**
Device plug Han 8D (metal, straight)	**A36**
Device plug Han 8D (metal, angled)	**A37**
Cable socket included	
Plastic, for device plug Han 7D and Han 8D	**A40**
Metal, for device plug Han 7D and Han 8D	**A41**
Device plug M12 mounted left	
Stainless steel, without cable socket	**A62**
Stainless steel, with cable socket	**A63**
Cable entry/connector mounting	
2x sealing plugs M20 x 1.5, IP66/68 installed on both sides	**A90**
2x sealing plugs ½-14 NPT, IP66/68 installed on both sides	**A91**
Cable gland/connector mounted left	**A97**
Cable gland/connector mounted on right	**A99**
Nameplate labeling (standard labeling: English, unit bar)	
German (bar)	**B11**
French (bar)	**B12**
Spanish (bar)	**B13**
Italian (bar)	**B14**
Chinese (bar)	**B15**
Russian (bar)	**B16**
English (psi)	**B20**
English (Pa)	**B30**
Chinese (Pa)	**B35**
Certificates	
Quality test certificate, 5-point factory calibration (IEC 60770-2)	**C11**
Inspection certificate (EN 10204-3.1) - Material of pressurized and wetted parts	**C12**
Factory certificate - NACE (MR 0103-2012 and MR 0175-2009))	**C13**
Factory certificate (EN 10204-2.2) - Wetted parts	**C14**
Inspection certificate (EN 10204-3.1) - PMI test of pressurized and wetted parts	**C15**
Certificates for functional safety	
Functional safety (IEC 61508) - SIL2/3	**C20**

Options	Order code
Append "-**Z**" to Article No., add order code and plain text or entry from drop-down list.	
Device options	
PDF file with device settings	**D10**
Double layer coating (epoxy resin and polyurethane) 120 µm of enclosure and cover	**D20**
FVMQ enclosure sealing	**D21**
IP66/IP68 degree of protection (not for device plugs M12 and Han)	**D30**
TAG label empty	**D40**
Without labeling of the measuring range on the TAG label	**D41**
Stainless steel Ex plate 1.4404/316L	**D42**
Increase of pressure stage from PN 420 to PN 500 (tested according to IEC 61010. Only permissible for media of fluid group 2 acc. to DGRL. Not suitable for use with hazardous media.))	**D50**
Overvoltage protection up to 6 kV (external)	**D71**
Adhesive labels on transport packaging (supplied by customer)	**D90**
General approval without Ex approval	
Worldwide (CE, RCM) except EAC, FM, CSA, KCC	**E00**
Worldwide (CE, RCM, EAC, FM, CSA, KCC)	**E01**
CSA (USA and Canada)	**E06**
EAC	**E07**
FM	**E08**
KCC	**E09**
Export approval CPA (China)	**E12**
Explosion protection approvals	
ATEX (Europe)	**E20**
CSA (USA and Canada)	**E21**
FM (USA and Canada)	**E22**
IECEx (Worldwide)	**E23**
EACEx (GOST-R, -K, -B)	**E24**
INMETRO (Brazil)	**E25**
KCs (Korea)	**E26**
NEPSI (China)	**E27**
PESO (India)	**E28**
UKR Sepro (Ukraine)	**E30**
ATEX (Europe) and IECEx (Worldwide)	**E47**
CSA (Canada) and FM (USA)	**E48**
ATEX (Europe) and IECEx (Worldwide) + CSA (Canada) and FM (USA)	**E49**
Marine approvals	
DNV-GL (Det Norske Veritas/Germanischer Lloyd)	**E50**
LR (Lloyds Register)	**E51**
BV (Bureau Veritas)	**E52**
ABS (American Bureau of Shipping)	**E53**
RMR (Russian Maritime Register)	**E55**
KR (Korean Register of Shipping)	**E56**
RINA (Registro Italiano Navale)	**E57**
CCS (China Classification Society)	**E58**
Country-specific approvals	
CRN approval Canada (Canadian Registration Number)	**E60**

© Siemens 2020

Options	Order code
Append "-**Z**" to Article No., add order code and plain text or entry from drop-down list.	
Special approvals	
Oxygen application (with inert liquid, max. 100 bar (1 450 psi) at 60° C (140 °F))	**E80**
Dual seal	**E81**
WRC / WRAS (drinking water); only with pressure cap O-rings made of EPDM	**E83**
NSF61 (drinking water)	**E84**
ACS (drinking water)	**E85**
Mounting bracket	
Steel, galvanized	**H01**
Stainless steel 1.4301/304	**H02**
Stainless steel 1.4404/316L	**H03**
Process flanges; screw plug with vent valve	
Welded in on right	**J08**
Welded in on left	**J09**
Glued in on right	**J10**
Glued in on left	**J11**
Flange connections with flange EN 1092-1	
Form B1	
• DN 25 PN 40, stainless steel 1.4571/316Ti	**J70**
• DN 50 PN 40, stainless steel 1.4571/316Ti	**J71**
• DN 80 PN 40, stainless steel 1.4571/316Ti	**J72**
• DN 15 PN 40, stainless steel 1.4571/316Ti	**J78**
Form C	
• DN 25 PN 40, stainless steel 1.4571/316Ti	**J73**
• DN 50 PN 40, stainless steel 1.4571/316Ti	**J74**
• DN 80 PN 40, stainless steel 1.4571/316Ti	**J75**
Flange connection options	
Flange connection and temperature extension	**J76**
Flange connection with epoxy resin coating	**J77**
Process flanges; special materials	
Reserved for 7MF7: without process flanges, without screws, without gaskets	**K00**
Process flange material alloy C22/2.4602	**K01**
Process flange material Monel 400/2.4360	**K02**
Process connection material PVDF, on the side ½-14 NPT	**K05**
Process flanges/process connection material PVDF, flange on the side EN 1092-1 Form B1 DN 25 PN 40, MAWP 4 bar	**K06**
Process flanges/process connection material PVDF, flange on the side EN 1092-1 Form B1 DN 40 PN 40, MAWP 4 bar	**K07**
Process flanges; process connection option	
Process flange with process connection G½ welded on	**K20**
Process connection NAM (ASTAVA)	**K21**
Process flanges chambered with gaskets	
1x chambered, graphite	**K40**
1x chambered, PTFE	**K41**
2x chambered, PTFE	**K42**
Process flanges, gaskets (instead of standard gaskets FKM (FPM))	
O-ring, process flanges, PTFE	**K50**
O-ring, process flanges, FEP (with silicone core, approved for food)	**K51**
O-ring, process flanges, FFKM (FFPM)	**K52**
O-ring, process flanges, NBR	**K53**
O-ring, process flanges, EPDM	**K54**

Options	Order code
Append "-**Z**" to Article No., add order code and plain text or entry from drop-down list.	
Process flange options	
Process flanges for vertical differential pressure lines (half process flange)	**K81**
Process flanges (+) - side front	**K82**
Process flange screws, process flange nuts, material Monel 400/2.4360	**K83**
Valve ¼-18 NPT, material same as process flanges	**K84**
Valve mounted on the side, measured medium: Gas	**K85**
Oval flange enclosed, gasket PTFE + mounting screws	**K86**
Valve manifolds	
With mounted valve manifold (3-way) 7MF9411-5BA, PTFE sealing rings, chrome-plated steel screws and pressure test certified in factory certificate (EN 10204-2.2)	**U01**
With mounted valve manifold (3-way) 7MF9411-5BA, PTFE sealing rings, stainless steel screws and pressure test certified in factory certificate (EN 10204-2.2)	**U02**
With mounted valve manifold (5-way) 7MF9411-5CA, PTFE sealing rings, chrome-plated steel screws and pressure test certified in factory certificate (EN 10204-2.2)	**U03**
With mounted valve manifold (5-way) 7MF9411-5CA, PTFE sealing rings, stainless steel screws and pressure test certified in factory certificate (EN 10204-2.2)	**U04**

© Siemens 2020

Options	Order code
Append "-**Z**" to Article No., add order code and plain text or entry from drop-down list.	
Device settings	
Measuring span Lower range value (max. 5 characters), upper range value (max. 5 characters), unit [mbar, bar, kPa, MPa, psi, ...], example: -0.5 ... 10.5 psi Input field 1 and input field 2: max. 5 characters and numbers only; decimal places as dot (comma is automatically converted to dot). Drop-down list: Pa, MPa, kPa, hPa, bar, mbar, psi, g/cm^2, kg/cm^2, kgf/cm^2, inH_2O, inH_2O (4°C), ftH_2O, mmH_2O, mmH_2O (4°C), mH_2O (4°C), mmHg, inHg, atm, torr	**Y01**
Square-rooted characteristic [VSLN2, MSLN2], example: VSLN2 Drop-down list: VSLN2, MSLN2	**Y02**
TAG (on stainless steel plate and device parameters, max. 32 characters) Input field: Free text, max. 32 characters	**Y15**
Measuring point description (on stainless steel plate and device parameters, max. 32 characters) Input field: Free text, max. 32 characters	**Y16**
TAG short (device parameters, max. 8 characters) Input field: Free text, max. 8 characters	**Y17**
Local display [Pressure, Percent], reference [None, Absolute, Relative], example: Pressure gauge Drop-down list: Percent, pressure unit, pressure unit abs., pressure unit gauge	**Y21**
Local display Scaling with standard units [m^3/s, l/s, m, inch, ...], example 1 ... . 5 m^3/s Input field 1 and input field 2: max. 5 characters and numbers only; decimal places as dot (comma is automatically converted to dot). Drop-down list: m, cm, mm, in, ft, m^3, l, hl, in^3, ft^3, yd^3, gal, gal (UK), bu, bbl, bbl (US), SCF, Nm^3, Nl, m^3/sec, m^3/h, m^3/d, l/sec, l/min, l/h, Ml/d, ft^3/sec, ft^3/h, ft^3/d, SCF/min, SCF/h, Nl/h, Nm^3/h, gal/sec, gal/min, gal/h, gal/d, Mgal/d, gal (UK)/sec, gal (UK)/min, gal (UK)/h, gal (UK)/d, bbl/sec, bbl/min, bbl/h, bbl/d, kg/sec, kg/min, kg/h, kg/d, g/sec, g/min, g/h, t/min, t/h, t/d, lb/sec, lb/min, lb/h, lb/d, ton/min, ton/h, ton/d, ton (UK)/h, ton (UK)/d.	**Y22**
Local display Scaling with user-specific units (max. 12 characters), example 1 ... 5 m Input field 1 and input field 2: max. 5 characters and numbers only; decimal places as dot (comma is automatically converted to dot). Input field 3: Free text, max. 8 characters	**Y23**
Saturation limits instead of 3.8 ... 20.5 mA, example: 3.8 ... 22.0 mA Drop-down list 1: 3.9, 4 Drop-down list 2: 20.8, 22	**Y30**
Fault current instead of 3.6 mA [22.5 mA, 22.8 mA] Drop-down list: 3.75; 21.75; 22.5; 22.6	**Y31**
Damping in seconds instead of 2 s (0.0 ... 100.0 s) Input field: max. 4 characters and numbers only; decimal places as dot (comma is automatically converted to dot); min. value = 0; max. value = 100.	**Y32**
ID number of special version Input field: max. 4 characters and only natural numbers from 0 … 9999	**Y99**

© Siemens 2020

Dimensional drawings

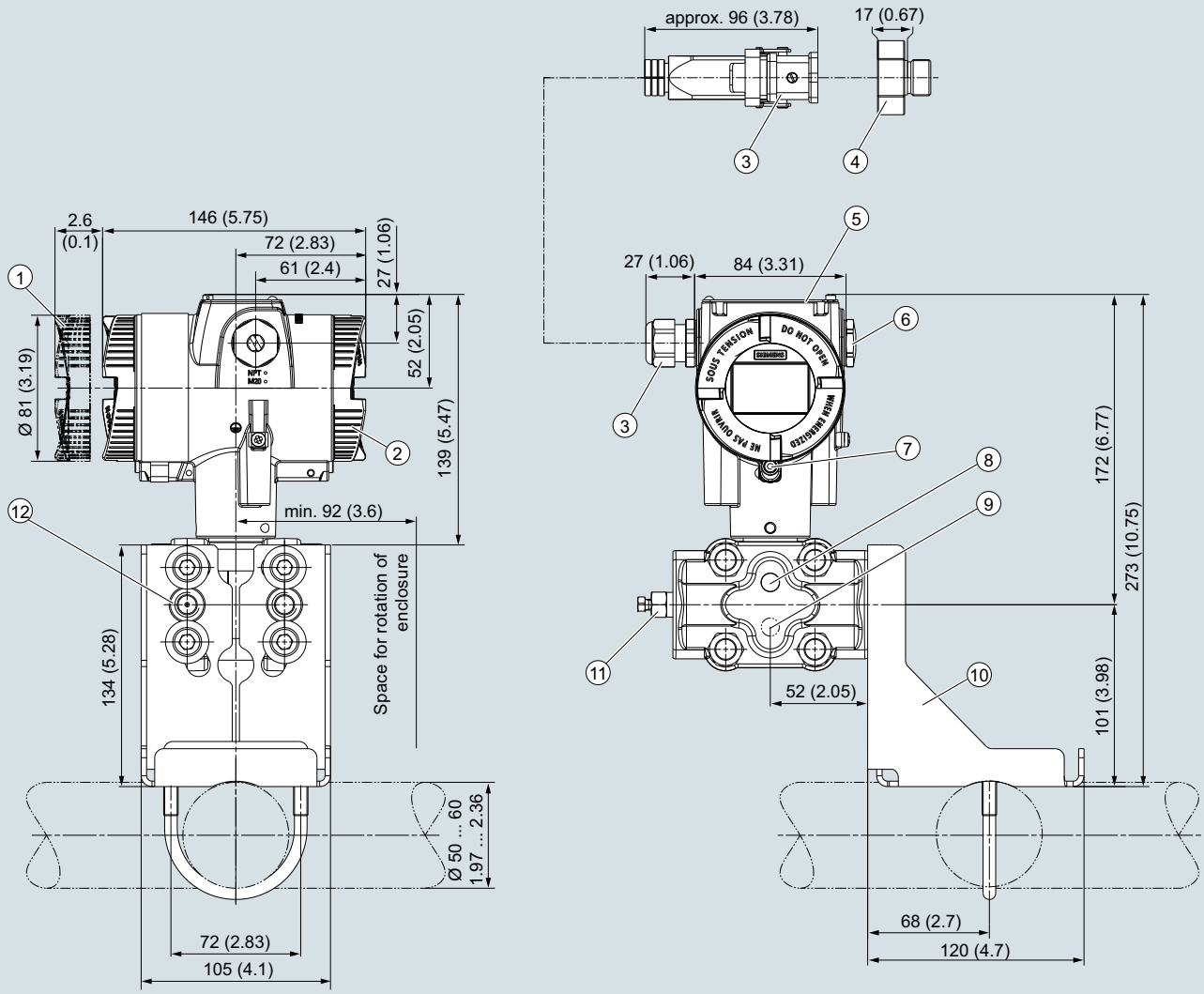

1. Electronics side, local display (longer overall length for cover with glass pane)[1]
2. Connection side
3. Electrical connection:
   - M20 x 1,5[3] screw gland
   - ½-14 NPT screw gland
   - Han 7D/Han 8D[2] [3] device plug
   - M12 device plug[2] [3]
4. Harting adapter
5. Cover over buttons and nameplate with general information
6. Blanking plug
7. Safety catch (only for "flameproof enclosure" type of protection)
8. Lateral ventilation for liquid measurement (Standard)
9. Lateral ventilation for gas measurement (order option K85)
10. Mounting bracket (optional)
11. Sealing plug with valve (optional)
12. Process connection: ¼-18 NPT (IEC 61518)

[1] In addition, allow approx. 22 mm (0.87 inch) for the thread length when removing the covers
[2] Not with "flameproof enclosure" type of protection
[3] Not with type of protection "FM + CSA" [is + XP]"

SITRANS P320/P420 pressure transmitter for differential pressure and flow, dimensions in mm (inch)

© Siemens 2020

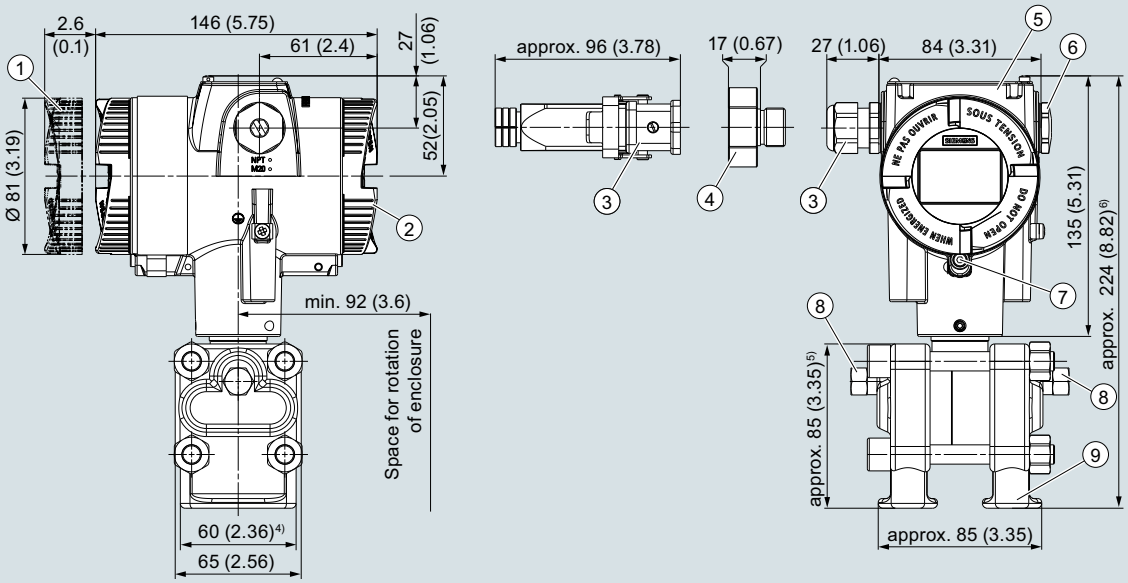

1. Electronics side, local display (longer overall length for cover with inspection window)[1]
2. Connection side
3. Electrical connection:
   - M20 x 1,5[3] screw gland
   - ½-14 NPT screw gland
   - Han 7D/Han 8D[2] [3] device plug
   - M12 device plug[2] [3]
4. Harting adapter
5. Cover over buttons and nameplate with general information
6. Blanking plug
7. Safety catch (only for "flameproof enclosure" type of protection)
8. Sealing plug with valve (option)
9. Process connection: ¼-18 NPT (IEC 61518)

1) In addition, allow approx. 22 mm (0.87 inch) for the thread length when removing the covers
2) Not with "flameproof enclosure" type of protection
3) Not with type of protection "FM + CSA" [is + XP]"
4) 74 mm (2.9 inch) for PN ≥ 420 (MAWP ≥ 6092 psi)
5) 91 mm (3.6 inch) for PN ≥ 420 (MAWP ≥ 6092 psi)
6) 226 mm (8.9 inch) for PN ≥ 420 (MAWP ≥ 6092 psi)

SITRANS P320/P420 pressure transmitter for differential pressure and flow with process covers for vertical differential pressure lines (option "K81"), dimensions in mm (inch)

© Siemens 2020

Technical specifications

SITRANS P320 / SITRANS P420 for level			
Input			
Measured variable	Level		
Measuring span (infinitely adjustable) and maximum operating pressure (pursuant to Pressure Equipment Directive 2014/68/EU)	Measuring span	Max. permissible operating pressure MAWP (PS)	Maximum permissible test pressure
	25 ... 250 mbar	See "Mounting flange"	
	2.5 ... 25 kPa		
	10 … 100.5 inH_2O		
	25 ... 600 mbar		
	2.5 ... 60 kPa		
	10 … 241 inH_2O		
	53 ... 1600 mbar		
	5.3 ... 160 kPa		
	21 … 643 inH_2O		
	166 ... 5000 mbar		
	16.6 ... 500 kPa		
	2.41 … 72.5 psi		
Measuring limits			
• Low measuring limit			
- Measuring cell with silicone oil filling	-100% of max. measuring range or 30 mbar a/3 kPa a/0.44 psi a depending on the mounting flange		
- Measuring cell with inert oil	-100% of max. measuring range or 30 mbar a/3 kPa a/0.44 psi a depending on the mounting flange		
- Measuring cell with FDA-compliant oil	-100% of max. measuring range or 100 mbar a/10 kPa a/1.45 psi a		
• Upper measuring limit	100% of max. measuring span		
• Lower range value	Between the measuring limits (infinitely adjustable)		
Output	**HART**		
Output signal	4 ... 20 mA		
• Low saturation limit (infinitely adjustable)	3.55 mA, factory preset to 3.8 mA		
• High saturation limit (infinitely adjustable)	22.8 mA, factory-set to 20.5 mA or optionally 22.0 mA		
• Ripple (without HART communication)	$I_{pp} \leq 0.5\%$ of max. output current		
Adjustable damping	0 … 100 s, continuously adjustable over remote operation		
	0 … 100 s, in increments of 0.1 s, adjustable over display		
• Current transmitter	3.55 … 22.8 mA		
• Failure signal	3.55 … 22.8 mA		
Load	Resistor R [Ω]		
• Without HART communication	R = (U_H - 10.5 V)/22.8 mA, U_H: Power supply in V		
• With HART communication	R = 230 … 1100 Ω (HART communicator (handheld))		
	R = 230 … 500 Ω (SIMATIC PDM)		
Characteristic curve	• Linearly increasing or linearly decreasing • Linear increase or decrease or according to the square root (only for differential pressure and flow)		
Physical bus	-		
Polarity-independent	-		
Measuring accuracy			
Reference conditions	• According to EN 60770-1 • Rising characteristic curve • Lower range value 0 bar/kPa/psi • Seal diaphragm stainless steel • Measuring cell with silicone oil filling • Room temperature 25 °C (77 °F)		
Conformity error at limit point setting, including hysteresis and repeatability			
Measuring span ratio r (spread, Turn-Down)	r = maximum measuring span/set measuring span or nominal measuring range		
• Linear characteristic			
- 250 mbar/25 kPa/3.6 psi - 600 mbar/60 kPa/8.7 psi - 1600 mbar/160 kPa/23.21 psi - 5 bar/500 kPa/72.5 psi	r ≤ 5:	≤ 0.125%	
	5 < r ≤ 10:	≤ (0.007 · r + 0.09)%	

© Siemens 2020

SITRANS P320 / SITRANS P420 for level	
Influence of ambient temperature in % per 28 °C (50 °F)	
• SITRANS P320	≤ (0.025 · r + 0.125)%
- 250 mbar/25 kPa/3.6 psi	
- 600 mbar/60 kPa/8.7 psi	
- 1600 mbar/160 kPa/23.21 psi	
- 5 bar/500 kPa/72.5 psi	
• SITRANS P420	≤ (0.025 · r + 0.0625)%
- 250 mbar/25 kPa/3.6 psi	
- 5 bar/500 kPa/72.5 psi	
- 600 mbar/60 kPa/8.7 psi	≤ (0.125 · r + 0.0625)%
- 1600 mbar/160 kPa/23.21 psi	
Effect of static pressure	
• on the lower range value	
- 250 mbar/25 kPa/3.63 psi	≤ (0.3 · r)% per nominal pressure
- 600 mbar/60 kPa/8.70 psi 1.6 bar/160 kPa/23.21 psi 5 bar/500 kPa/72.52 psi	≤ (0.15 · r)% per nominal pressure
• on the measuring span	≤ (0.1 · r)% per nominal pressure
Long-term stability at ±30 °C (±54 °F)	
• all measuring cells	In 5 years ≤ (0.25 · r)% static pressure max. 70 bar/7 MPa/1015 psi
Step response time T_{63} (without electrical damping)	Depending on the installed remote seal
Influence of mounting position	Depends on the fill fluid in the mounting flange
Effect of auxiliary power (in % per voltage change)	0.005% per 1 V
Operating conditions	
Temperature of medium	
Measuring cell with silicone oil filling	• High-pressure side: See "Mounting flange" • Low-pressure side: -40 … +100 °C (-40 … +212 °F)
Ambient conditions	
• Ambient temperature/enclosure	Always consider the assignment of max. permissible operating temperature to max. permissible operating pressure of the respective flange connection.
- Measuring cell with silicone oil filling	-40 ... +85 °C (-40 ... +185 °F)
- Display	-20 … +80 °C (-4 … +176 °F)
• Storage temperature	-50 ... +85 °C (-58 ... +185 °F)
• Climatic class in accordance with IEC 60721-3-4	4K4H
• Degree of protection	
- According to IEC 60529	IP66, IP68
- According to NEMA 250	Type 4X
• Electromagnetic compatibility	
- Emitted interference and interference immunity	According to IEC 61326 and NAMUR NE 21
Vibration resistance	
• Reference conditions	Specifications apply to devices without mounting bracket
• General operating conditions	
- Oscillations (sine) IEC 60068-2-6	10 ... 58 Hz, 0.3 mm (0.01 inch) 58 ... 500 Hz, 20 m/s² (65.62 ft/s²) 1 octave/min 5 cycles/axis
- Continuous shocks (half-sine) IEC 60068-2-27	250 m/s² (820 ft/s²) 6 ms 2000 shocks/axis
- Noise (digitally controlled) IEC 60068-2-64	10 ... 200 Hz; 1 (m/s²)²/Hz (3.28 (ft/s²)²/Hz) 200 ... 500 Hz; 0.3 (m/s²)²/Hz (0.98 (ft/s²)²/Hz) 4 hours/axle
• Operating conditions for marine applications	
- IEC 60068-2-6 - DNVGL-CG-0339, clause 6 - Lloyd's Register Test Specification Number 1, section 12. - Bureau Veritas Pt C, Ch 3, Sec 6, Table 1, No 7	2 ... 25 Hz, 1.6 mm (0.06 inch) 25 ... 100 Hz, 40 m/s² (131.23 ft/s²) 1 octave/min

© Siemens 2020

SITRANS P320 / SITRANS P420 for level		
Design		
Weight		
• According to EN (pressure transmitter with mounting flange, without tube)		
• According to ASME (pressure transmitter with mounting flange, without tube)		
Material		
• Wetted parts materials		
- High-pressure side	Seal diaphragm of mounting flange	Stainless steel, mat. no. 1.4404/316L, Monel 400, mat. no. 2.4360, Alloy B2, mat. no. 2.4617, Alloy C276, mat. no. 2.4819, Alloy C22, mat. no. 2.4602, tantalum, PTFE, PFA, ECTFE
	Sealing surface	Smooth according to EN 1092-1, form B1 or ASME B16.5 RF 125 … 250 AA for stainless steel 316L, EN 2092-1 form B2 or ASME B16.5 RFSF for the remaining materials
- Sealing material in the process flanges	For standard applications	Viton
	For underpressure applications on the mounting flange	Copper
- Low-pressure side	Seal diaphragm	Stainless steel, mat. no. 1.4404/316L
	Process flanges	Stainless steel, mat. no. 1.4408/316
	Process flanges screw	Stainless steel ISO 3506-1 A4-70
	O-ring	FPM (Viton)
• Non-wetted parts materials		
- Electronics enclosure	• Low-copper die-cast aluminum GD-AlSi 12 or stainless steel precision casting, mat. no. 1.4409/ CF-3M • Standard: Powder coating with polyurethane Option: 2 coats: Coat 1: epoxy-based; coat 2: Polyurethane • Stainless steel type plate (1.4404/316L)	
Pressure flange screws	Stainless steel ISO 3506-1 A4-70	
Measuring cell filling	Silicone oil	
• Mounting flange fill fluid	Silicone oil or other material	
Process connection		
• High-pressure side	Flange according to EN and ASME	
• Low-pressure side	¼-18 NPT female thread and flat connection with M10 fastening screw thread in accordance with DIN 19213 (M12 for PN 420 (MWP 6092 psi)) or 7/16-20 UNF in accordance with EN 61518	
Electrical connection	Screw terminals	
	Cable entry via the following screwed glands: • M20 x 1.5 • ½-14 NPT • Device plug Han 7D/Han 8D[1)] • Device plug M12	
Displays and controls		
Keys	4 keys for operation directly on the device	
Display	• With or without integrated display (optional) • Cover with inspection window (optional)	
Auxiliary power U_H		
Terminal voltage on pressure transmitter	10.5 ... 45 V DC 10.5 ... 30 V DC in intrinsically safe mode	
Ripple	$U_{SS} \leq 0.2$ V (47 … 125 Hz)	
Noise	$U_{eff} \leq 1.2$ mV (0.5 … 10 kHz)	
Auxiliary power	–	
Separate supply voltage	–	

© Siemens 2020

SITRANS P320 / SITRANS P420 for level	
Certificates and approvals	
Classification according to pressure equipment directive (PED 2014/68/EU)	For gases of fluid group 1 and liquids of fluid group 1; complies with requirements of article 4, paragraph 3 (sound engineering practice)
Drinking water	
• WRAS (England)	No.: 1903094 (option E83)
• ACS (France)	No.: 18 ACC LY 277 (option E85)
• NSF (USA)	No.: 20180920-MH61350 (option E84)
CRN (Canada)	No.: 0F9863.5C (option E60)
Explosion protection acc. to NEPSI (China)	No.: GYJ19.1058X (option E27)
Explosion protection acc. to INMETRO (Brazil)	No.: BRA-18-GE-0035X (option E25)
Explosion protection	
• Intrinsic safety "i"	
- Marking	II 1/2 G Ex ia/ib IIC T4/T6 Ga/Gb
- Permissible ambient temperature	-40 ... +80 °C (-40 ... +176 °F) temperature class T4 -40 ... +70 °C (-40 ... +158 °F) temperature class T6
- Permissible temperature of measuring medium	-40 ... +100 °C (-40 ... +212 °F) temperature class T4 -40 ... +70 °C (-40 ... +158 °F) temperature class T6
- Connection	To certified intrinsically safe circuits with peak values: U_i = 30 V, I_i = 101 mA, P_i = 760 mW U_i = 29 V, I_i = 110 mA, P_i = 800 mW
- Effective internal inductance/capacitance	L_i = 0.24 µH/C_i = 3.29 nF
• Flameproof enclosure "d"	
- Marking	Ex II 1/2 G Ex ia/db IIC T4/T6 Ga/Gb
- Permissible ambient temperature	-40 ... +80 °C (-40 ... +176 °F) temperature class T4 -40 ... +70 °C (-40 ... +158 °F) temperature class T6
- Permissible temperature of measuring medium	-40 ... +100 °C (-40 ... +212 °F) temperature class T4 -40 ... +70 °C (-40 ... +158 °F) temperature class T6
- Connection	To a circuit with the operating values: U_n = 10.5 to 45 V, 4 ... 20 mA
• Dust explosion protection for zones 20, 21, 22	
- Marking	Ex II 1D Ex tb IIIC T120 °C Da Ex II 2D Ex tb IIIC T120 °C Db Ex II 3D Ex tc IIIC T120 °C Dc
- Permissible ambient temperature	-40 ... +80 °C (-40 ... +176 °F)
- Permissible temperature of measuring medium	-40 ... +100 °C (-40 ... +212 °F)
- Max. surface temperature	120 °C (248 °F)
- Connection	To a circuit with the operating values: U_n = 10.5 to 45 V, 4 ... 20 mA
• Dust explosion protection for zones 21, 22	
- Marking	Ex II 2D Ex ib IIIC T120 °C Db
- Permissible ambient temperature	-40 ... +80 °C (-40 ... +176 °F)
- Permissible temperature of measuring medium	-40 ... +100 °C (-40 ... +212 °F)
- Connection	To certified intrinsically safe circuits with the peak values: U_i = 30 V, I_i = 101 mA, P_i = 760 mW U_i = 29 V, I_i = 110 mA, P_i = 800 mW
- Effective internal inductance/capacitance	L_i = 0.24 µH/C_i = 3.29 nF
• Type of protection for Zone 2	
- Marking	Ex II 3G Ex ec IIC T4/T6 Gc
- Permissible ambient temperature "ec"	-40 ... +80 °C (-40 ... +176 °F) temperature class T4 -40 ... +40 °C (-40 ... +104 °F) temperature class T6
- Permissible temperature of measuring medium	-40 ... +100 °C (-40 ... +212 °F) temperature class T4 -40 ... +70 °C (-40 ... +158 °F) temperature class T6
- "ec" connection	To a circuit with the operating values: U_n = 10.5 to 30 V, 4 ... 20 mA

© Siemens 2020

SITRANS P320 / SITRANS P420 for level	
• Explosion protection acc. to FM	Available soon
- Marking (XP/DIP) or IS; NI; S	CL I, DIV 1, GP ABCD T4 ... T6; CL II, DIV 1, GP EFG; CL III; Ex ia IIC T4 ... T6: CL I, DIV 2, GP ABCD T4 ... T6; CL II, DIV 2, GP FG; CL III
• Explosion protection according to CSA	Available soon
- Marking (XP/DIP) or (IS)	CL I, DIV 1, GP ABCD T4 ... T6; CL II, DIV 1, GP EFG; CL III; Ex ia IIC T4 ... T6: CL I, DIV 2, GP ABCD T4 ... T6; CL II, DIV 2, GP FG; CL III
NAMUR recommendations	
• NE 06	Standardized Electrical Signals and Questions Relating to Engineering Technology
• NE 21	Electromagnetic Compatibility (EMC) of Industrial Process and Laboratory Control Equipment
• NE 23	Extra Low Voltage Circuits with Safe Separation
• NE 43	Standardization of the Signal Level for the Failure Information of Digital Transmitters
• NE 53	Software and Hardware of Field Devices and Signal Processing Devices with Digital Electronics
• NE 80	The Application of the Pressure Equipment Directive to Process Control Devices
• NE 105	Specifications for Integrating Fieldbus Devices in Engineering Tools for Field Devices
• NE 107	Self-Monitoring and Diagnosis of Field Devices
• NE 131	NAMUR Standard Device - Field Devices for Standard Applications

1) Han 8D is identical to Han 8U.

HART communication	
HART	230 ... 1100 Ω
Protocol	HART 7
Software for computer	SIMATIC PDM

Mounting flange	
Nominal diameter	Nominal pressure
• Acc. to EN 1092-1	
- DN 80	PN 40
- DN100	PN 16, PN 40
• According to ASME B16.5	
- 3 inch	Class 150, class 300
- 4 inch	Class 150, class 300

© Siemens 2020

Selection and ordering data

	Article No.
Pressure transmitters for level	
SITRANS P320 ↗	**7MF036 ■ - ■■■■■ - ■■■■**
SITRANS P420 ↗	**7MF046 ■ - ■■■■■ - ■■■■**
↗ Click on the Article no. for the online configuration in the PIA Life Cycle Portal.	
Communication	
HART, 4 ... 20 mA	**0**
Measuring cell filling	
Silicone oil	**1**
Maximum measuring span	
250 mbar (100.5 inH_2O)	**G**
600 mbar (241 inH_2O)	**H**
1 600 mbar (643 inH_2O)	**M**
5000 mbar (72.5 psi)	**P**
Process connection	
Version for diaphragm seal with mounting thread $^7/_{16}$-20 UNF (IEC 61518): Remote seal 7MF0814 must be ordered separately.	**V**
Wetted parts materials: Process connection, seal diaphragm	
Stainless steel 316L/1.4404, stainless steel 316L/1.4404, process flange stainless steel 316/1.4408	**0**
Non-wetted parts materials	
Die-cast aluminum	**1**
Stainless steel precision casting CF3M/1.4409 similar to 316L	**2**
Enclosure	
Dual chamber device	**5**
Type of protection	
Without Ex	**A**
Intrinsic safety	**B**
Flameproof enclosure	**C**
Flameproof enclosure, intrinsic safety	**D**
Dust protection by enclosure Zone 21/22 (DIP), increased safety Zone 2	**L**
Dust protection by enclosure Zone 20/21/22 (DIP), increased safety Zone 2	**M**
Combination of options B, C and L (zone model)	**S**
Combination of options B, C and M (zone model, Class Division)	**T**
Electrical connections/cable entries	
Thread for cable gland: Cable gland must be ordered separately as option (Axx) • 2 x M20 x 1.5	**F**
• 2 x ½-14 NPT	**M**
Local operation/display	
Without display (cover closed)	**0**
With display (cover closed)	**1**
With display (cover with glass pane)	**2**

© Siemens 2020

Selection and ordering data

Options	Order code
Append "-**Z**" to Article No., add order code and plain text or entry from drop-down list.	
Cable glands included	
Plastic	**A00**
Metal	**A01**
Stainless steel	**A02**
Stainless steel 316L/1.4404	**A03**
CMP, for XP devices	**A10**
CAPRI ADE 4F, CuZn, cable inner diameter 7 ... 12 mm, cable outer diameter 10 ... 16 mm	**A11**
CAPRI ADE 4F, stainless steel, cable inner diameter 7 ... 12 mm, cable outer diameter 10 ... 16 mm	**A12**
Device plug Han mounted left	
Device plug Han 7D (plastic, straight)	**A30**
Device plug Han 7D (plastic, angled)	**A31**
Device plug Han 7D (metal, straight)	**A32**
Device plug Han 7D (metal, angled)	**A33**
Device plug Han 8D (plastic, straight)	**A34**
Device plug Han 8D (plastic, angled)	**A35**
Device plug Han 8D (metal, straight)	**A36**
Device plug Han 8D (metal, angled)	**A37**
Cable socket included	
Plastic, for device plug Han 7D and Han 8D	**A40**
Metal, for device plug Han 7D and Han 8D	**A41**
Device plug M12 mounted left	
Stainless steel, without cable socket	**A62**
Stainless steel, with cable socket	**A63**
Cable entry/connector mounting	
2x sealing plugs M20 x 1.5, IP66/68 installed on both sides	**A90**
2x sealing plugs ½-14 NPT, IP66/68 installed on both sides	**A91**
Cable gland/connector mounted left	**A97**
Cable gland/connector mounted on right	**A99**
Nameplate labeling (standard labeling: English, unit bar)	
German (bar)	**B11**
French (bar)	**B12**
Spanish (bar)	**B13**
Italian (bar)	**B14**
Chinese (bar)	**B15**
Russian (bar)	**B16**
English (psi)	**B20**
English (Pa)	**B30**
Chinese (Pa)	**B35**
Certificates	
Quality test certificate, 5-point factory calibration (IEC 60770-2)	**C11**
Inspection certificate (EN 10204-3.1) - Material of pressurized and wetted parts	**C12**
Factory certificate - NACE (MR 0103-2012 and MR 0175-2009))	**C13**
Factory certificate (EN 10204-2.2) - Wetted parts	**C14**
Inspection certificate (EN 10204-3.1) - PMI test of pressurized and wetted parts	**C15**
Certificates for functional safety	
Functional safety (IEC 61508) - SIL2/3	**C20**

Options	Order code
Append "-**Z**" to Article No., add order code and plain text or entry from drop-down list.	
Device options	
PDF file with device settings	**D10**
Double layer coating (epoxy resin and polyurethane) 120 µm of enclosure and cover	**D20**
FVMQ enclosure sealing	**D21**
IP66/IP68 degree of protection (not for device plugs M12 and Han)	**D30**
TAG label empty	**D40**
Without labeling of the measuring range on the TAG label	**D41**
Stainless steel Ex plate 1.4404/316L	**D42**
Overvoltage protection up to 6 kV (external)	**D71**
Adhesive labels on transport packaging (supplied by customer)	**D90**
General approval without Ex approval	
Worldwide (CE, RCM) except EAC, FM, CSA, KCC	**E00**
Worldwide (CE, RCM, EAC, FM, CSA, KCC)	**E01**
CSA (USA and Canada)	**E06**
EAC	**E07**
FM	**E08**
KCC	**E09**
Export approval CPA (China)	**E12**
Explosion protection approvals	
ATEX (Europe)	**E20**
CSA (USA and Canada)	**E21**
FM (USA and Canada)	**E22**
IECEx (Worldwide)	**E23**
EACEx (GOST-R, -K, -B)	**E24**
INMETRO (Brazil)	**E25**
KCs (Korea)	**E26**
NEPSI (China)	**E27**
PESO (India)	**E28**
UKR Sepro (Ukraine)	**E30**
ATEX (Europe) and IECEx (Worldwide)	**E47**
CSA (Canada) and FM (USA)	**E48**
ATEX (Europe) and IECEx (Worldwide) + CSA (Canada) and FM (USA)	**E49**
Marine approvals	
DNV-GL (Det Norske Veritas/Germanischer Lloyd)	**E50**
LR (Lloyds Register)	**E51**
BV (Bureau Veritas)	**E52**
ABS (American Bureau of Shipping)	**E53**
RMR (Russian Maritime Register)	**E55**
KR (Korean Register of Shipping)	**E56**
RINA (Registro Italiano Navale)	**E57**
CCS (China Classification Society)	**E58**
Country-specific approvals	
CRN approval Canada (Canadian Registration Number)	**E60**

© Siemens 2020

Options	Order code
Append "-**Z**" to Article No., add order code and plain text or entry from drop-down list.	
Special approvals	
Oxygen application (with inert liquid, max. 100 bar (1 450 psi) at 60° C (140 °F))	**E80**
Dual seal	**E81**
WRC / WRAS (drinking water); only with pressure cap O-rings made of EPDM	**E83**
NSF61 (drinking water)	**E84**
ACS (drinking water)	**E85**
Device settings	
Measuring span Lower range value (max. 5 characters), upper range value (max. 5 characters), unit [mbar, bar, kPa, MPa, psi, ...], example: -0.5 ... 10.5 psi Input field 1 and input field 2: max. 5 characters and numbers only; decimal places as dot (comma is automatically converted to dot). Drop-down list: Pa, MPa, kPa, hPa, bar, mbar, psi, g/cm^2, kg/cm^2, kgf/cm^2, inH_2O, inH_2O (4°C), ftH_2O, mmH_2O, mmH_2O (4°C), mH_2O (4°C), mmHg, inHg, atm, torr	**Y01**
TAG (on stainless steel plate and device parameters, max. 32 characters) Input field: Free text, max. 32 characters	**Y15**
Measuring point description (on stainless steel plate and device parameters, max. 32 characters) Input field: Free text, max. 32 characters	**Y16**
TAG short (device parameters, max. 8 characters) Input field: Free text, max. 8 characters	**Y17**
Local display [Pressure, Percent], reference [None, Absolute, Relative], example: Pressure gauge Drop-down list: Percent, pressure unit, pressure unit abs., pressure unit gauge	**Y21**
Local display Scaling with standard units [m^3/s, l/s, m, inch, ...], example 1 ... 5 m Input field 1 and input field 2: max. 5 characters and numbers only; decimal places as dot (comma is automatically converted to dot). Drop-down list: m, cm, mm, in, ft, m^3, l, hl, in^3, ft^3, yd^3, gal, gal (UK), bu, bbl, bbl (US), SCF, Nm^3, Nl.	**Y22**
Local display Scaling with user-specific units (max. 12 characters), example 1 ... 5 m Input field 1 and input field 2: max. 5 characters and numbers only; decimal places as dot (comma is automatically converted to dot). Input field 3: Free text, max. 8 characters	**Y23**
Saturation limits instead of 3.8 ... 20.5 mA, example: 3.8 ... 22.0 mA Drop-down list 1: 3.9, 4 Drop-down list 2: 20.8, 22	**Y30**
Fault current instead of 3.6 mA [22.5 mA, 22.8 mA] Drop-down list: 3.75; 21.75; 22.5; 22.6	**Y31**
Damping in seconds instead of 2 s (0.0 ... 100.0 s) Input field: max. 4 characters and numbers only; decimal places as dot (comma is automatically converted to dot); min. value = 0; max. value = 100.	**Y32**
ID number of special version Input field: max. 4 characters and only natural numbers from 0 … 9999	**Y99**

© Siemens 2020

Selection and Ordering data		Article No.	Order code
Diaphragm seal ↗		7MF0814-	
Flange type design, direct connected to a SITRANS P transmitter for level 7MF03../7MF04.. (order separately) Scope of delivery: 1 off		■■■03-0■■■	■■■
↗ Click on the Article No. for the online configuration in the PIA Life Cycle Portal.			
Connecting standard EN 1092-1			
Nominal diameter	**Nominal pressure**		
DN 40	PN 10/16/25/40	0DD	
	PN 63/100	0DF	
	PN 160	0DG	
DN 50	PN 10/16/25/40	0ED	
	PN 63/100	0EE	
	PN 160	0EF	
DN 80	PN 10/16/25/40	0GD	
	PN 100	0GF	
DN 100	PN 10/16	0HB	
	PN 25/40	0HD	
DN 125	PN 16	0JB	
	PN 40	0JD	
Connecting standard ASME B16.5			
Nominal diameter	**Nominal pressure**		
1½ inch	class 150	1LA	
	class 300	1LB	
	class 400/600	1LD	
	class 900/1500	1LF	
2 inch	class 150	1MA	
	class 300	1MB	
	class 400/600	1MD	
	class 900/1500	1MF	
3 inch	class 150	1PA	
	class 300	1PB	
	class 600	1PD	
	class 1500	1PF	
4 inch	class 150	1QA	
	class 300	1QB	
	class 400	1QD	
	class 1500	1QF	
5 inch	class 150	1RA	
	class 300	1RB	
	class 400	1RC	
Connecting standard J.I.S.			
Nominal diameter	**Nominal pressure**		
DN 50	10K	2ES	
	20k	2ET	
	50K	2EU	
DN 80	10K	2GS	
	20k	2GT	
	50K	2GU	
DN 100	10K	2HS	
	20k	2HT	
	50K	2HU	
Other version Add Order code and plain text		9AA	H1Y

Selection and Ordering data	Article No.	Order code
Diaphragm seal	7MF0814-	
Flange type design, direct connected to a SITRANS P transmitter for level 7MF03../7MF04.. (order separately) Scope of delivery: 1 off	03-0■■■	■■■
Filling liquid		
Silicone oil M5	A	
Silicone oil M50	B	
High-temperature oil	C	
Halocarbon oil	D	
Food-grade oil (FDA listed)	E	
Other version, add Order code and plain text: Filling liquid: ...	Z	P1Y
Wetted parts materials		
Stainless steel 316L		
• Without coating	A	
• With PFA coating	D	
• With PTFE coating	E0	
• With ECTFFE coating	F	
Monel 400, 2.4360	G	
Hastelloy C276, 2.4819	J	
Tantalum	K	
Titanium, 3.7035	L0	
Nickel 201	M0	
Diaphragm Duplex, 1.4462	Q	
Diaphragm plus flange Duplex, 1.4462	R	
Stainless steel 316L with gold coating	S0	
Hastelloy C4, 2.4610	U0	
Hastelloy C22, 2.4602	V0	
Other version Add Order code and plain text	Z8	Q1Y
Extension length		
• without	0	
• 50 mm (2")	1	
• 100 mm (4")	2	
• 150 mm (6")	3	
• 200 mm (8")	4	
• 250 mm (10")	5	
Other version Add Order code and plain text	Z8	Q1Y

© Siemens 2020

Selection and Ordering data	Article No.	Order code
Diaphragm seal	7MF0814-	
Flange type design, direct connected to a SITRANS P transmitter for level 7MF03../7MF04.. (order separately) Scope of delivery: 1 off	■■■03-0■■	■■■
Customer-specific extension length		
Wetted parts stainless steel without coating		
Range / Standard length		
20 ... 50 mm (0.79 ... 1.97") / 50 mm (1.97")		A 1
51 ... 100 mm (2.01 ... 3.94") / 100 mm (3.94")		A 2
101 ... 150 mm (3.98 ... 5.91") / 150 mm (5.91")		A 3
151 ... 200 mm (5.94 ... 7.87") / 200 mm (7.87")		A 4
201 ... 250 mm (7.91 ... 9.84") / 250 mm (9.84")		A 5
Wetted parts stainless steel with ECTFE coating		
Range / Standard length		
20 ... 50 mm (0.79 ... 1.97") / 50 mm (1.97")		F 1
51 ... 100 mm (2.01 ... 3.94") / 100 mm (3.94")		F 2
101 ... 150 mm (3.98 ... 5.91") / 150 mm (5.91")		F 3
151 ... 200 mm (5.94 ... 7.87") / 200 mm (7.87")		F 4
201 ... 250 mm (7.91 ... 9.84") / 250 mm (9.84")		F 5
Wetted parts stainless steel with PFA coating		
Range / Standard length		
20 ... 50 mm (0.79 ... 1.97") / 50 mm (1.97")		D 1
51 ... 100 mm (2.01 ... 3.94") / 100 mm (3.94")		D 2
101 ... 150 mm (3.98 ... 5.91") / 150 mm (5.91")		D 3
151 ... 200 mm (5.94 ... 7.87") / 200 mm (7.87")		D 4
201 ... 250 mm (7.91 ... 9.84") / 250 mm (9.84")		D 5
• Wetted parts Monel 400		
Range / Standard length		
20 ... 50 mm (0.79 ... 1.97") / 50 mm (1.97")		G 1
51 ... 100 mm (2.01 ... 3.94") / 100 mm (3.94")		G 2
101 ... 150 mm (3.98 ... 5.91") / 150 mm (5.91")		G 3
151 ... 200 mm (5.94 ... 7.87") / 200 mm (7.87")		G 4
• Wetted parts Hastelloy C276		
Range / Standard length		
20 ... 50 mm (0.79 ... 1.97") / 50 mm (1.97")		J 1
51 ... 100 mm (2.01 ... 3.94") / 100 mm (3.94")		J 2
101 ... 150 mm (3.98 ... 5.91") / 150 mm (5.91")		J 3
151 ... 200 mm (5.94 ... 7.87") / 200 mm (7.87")		J 4

Selection and Ordering data	Article No.	Order code
Diaphragm seal	7MF0814-	
Flange type design, direct connected to a SITRANS P transmitter for level 7MF03../7MF04.. (order separately) Scope of delivery: 1 off	■■■03-0■■	■■■
• Wetted parts Tantalum		
Range / Standard length		
20 ... 50 mm (0.79 ... 1.97") / 50 mm (1.97")		K 1
51 ... 100 mm (2.01 ... 3.94") / 100 mm (3.94")		K 2
101 ... 150 mm (3.98 ... 5.91") / 150 mm (5.91")		K 3
151 ... 200 mm (5.94 ... 7.87") / 200 mm (7.87")		K 4

© Siemens 2020

Selection and Ordering data	Order code
Further designs	
Add "**-Z**" to Article No. and specify Order code.	
Factory certificates	
Quality test certificate, 5-point factory calibration (IEC 60770-2)	**C11**
Inspection certificate according to EN 10204-3.1 for main body and diaphragm	**C12**
Manufacturer code according to NACE (MR 0103-2012 and MR 0175-2009) (only in combination with wetted parts made of stainless steel 316 L and Hastelloy)	**C13**
Inspection certificate (EN 10204-3.1) - PMI test of pressurized and wetted parts	**C15**
Factory certificate on the FDA listing of the oil according to EN 10204-2.2	**C17**
Factory certificate functional safety (SIL2/3), suitability of devices for use according to IEC 61508 and IEC 61511 (contains SIL declaration of conformity)	**C20**
Accessories	
Spark arrestor (for differential pressure and level transmitter)	**D62**
Low-temperature version (for Silicon Oil M50 only)	**D67**
Negative pressure services	
Negative pressure service (for differential pressure transmitters)	**D83**
Extended negative pressure services (for differential pressure transmitters)	**D88**
General product approvals without explosion proof approvals	
Oil-and grease-free cleaned version (for O_2-appl. including certificate EN10204-2.2 (only with fill fluid Halocarbon oil max. temperature 60 °C and max. pressure 50 bar)	**E80**
Oil-and grease-free cleaned version (not for O_2-appl. including certificate EN10204-2.2 (only with fill fluid Halocarbon oil)	**E87**
Sealing surface	
Sealing surface smooth, form B2/EN1092-1 resp. RFSF/ANSI B16.5 (wetted parts 316L only)	**M50**
Sealing surface groove to EN1092-1, form D (instead of sealing surface B1, wetted parts 316L only)	**M54**
Sealing surface RJF (groove) to ASME B16.5 (instead of sealing surface RF 125...250AA, wetted parts 316L only)	**M64**
Sealing surface with tongue to EN1092-1, form C (wetted parts 316L only)	
• DN 40	**M71**
• DN 50	**M72**
• DN 80	**M73**
• DN 100	**M74**
• DN 125	**M75**
Sealing surface with spigot to EN1092-1, form E (wetted parts 316L only)	
• DN 40	**M77**
• DN 50	**M78**
• DN 80	**M79**
• DN 100	**M80**
• DN 125	**M81**
Sealing surface with recess to EN1092-1, form F (wetted parts 316L only)	
• DN 50	**M84**
• DN 80	**M85**
• DN 100	**M86**
• DN 125	**M87**

Selection and Ordering data	Order code
Further designs	
Add "**-Z**" to Article No. and specify Order code.	
Remote seal connection	
Elongated pipe, 150 mm (5.9 inch) instead of 100 mm (3.9 inch)	**S05**
Elongated pipe, 200 mm (7.9 inch) instead of 100 mm (3.9 inch)	**S06**
Customer-specific tube length	
Customer-specific tube length (specify in plain text)	**Y44**
Specification of process conditions[1]	
Ambient temperature range	
• -10 ... +50 °C (14 ... +122 °F) preset	**D66**
• -40 ... +50 °C (-40 ... +122 °F)	**D67**
• -10 ... +85 °C (14 ... +185 °F)	**D68**
Process temperature min. ... °C/(°F)/max. ... °C/(°F)	**Y50**

[1] See also "Specification of process conditions for selection and ordering data", page 1/337.

© Siemens 2020

Dimensional drawings

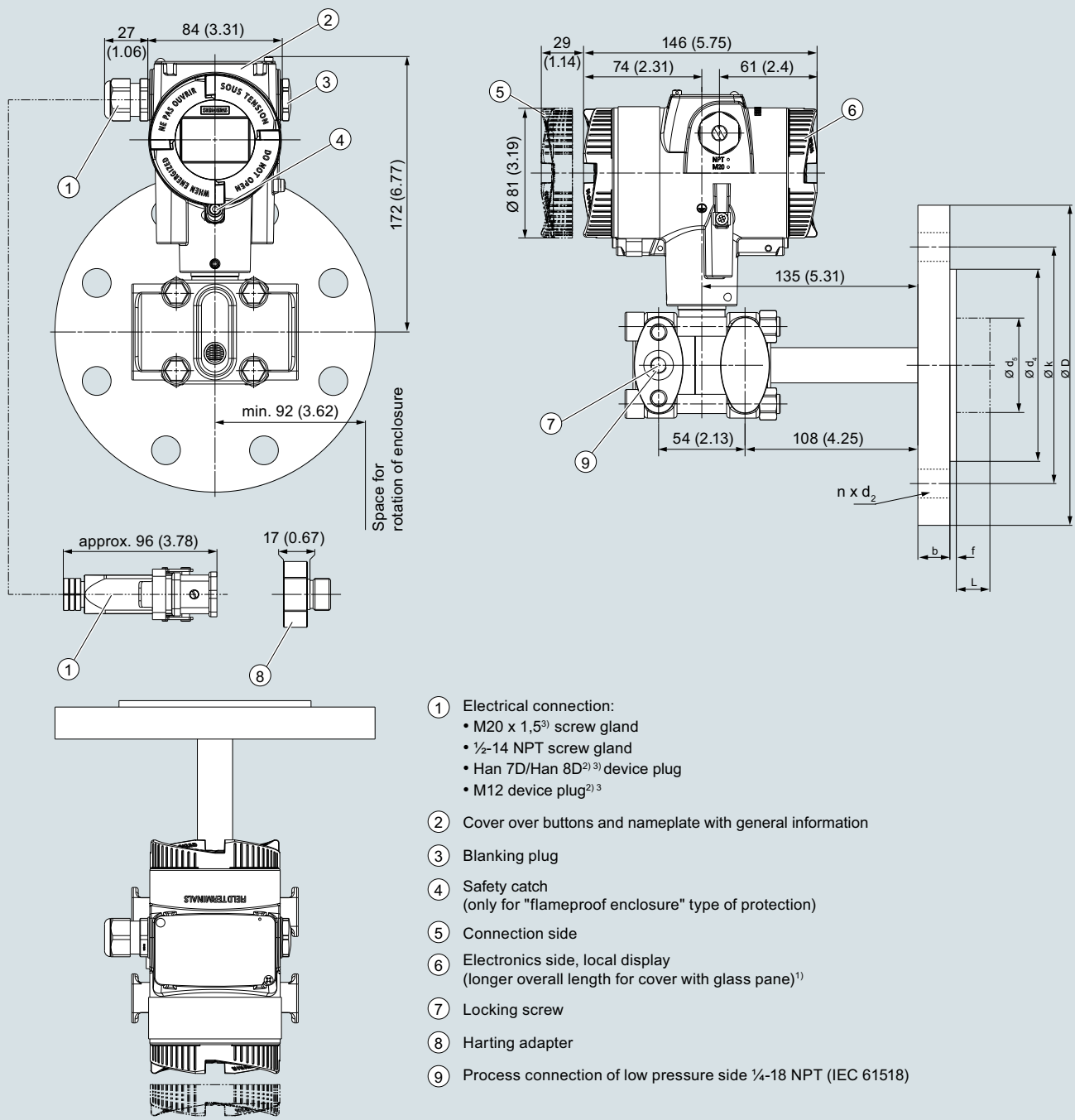

1. Electrical connection:
   - M20 x 1,5[3] screw gland
   - ½-14 NPT screw gland
   - Han 7D/Han 8D[2) 3)] device plug
   - M12 device plug[2) 3]
2. Cover over buttons and nameplate with general information
3. Blanking plug
4. Safety catch
   (only for "flameproof enclosure" type of protection)
5. Connection side
6. Electronics side, local display
   (longer overall length for cover with glass pane)[1]
7. Locking screw
8. Harting adapter
9. Process connection of low pressure side ¼-18 NPT (IEC 61518)

[1] In addition, allow approx. 22 mm (0.87 inch) for the thread length when removing the covers
[2] Not with "flameproof enclosure" type of protection
[3] Not with type of protection "FM + CSA" [is + XP]"

SITRANS P320/P420 pressure transmitter for level, including mounting flange, dimensions in mm (inch)

© Siemens 2020

Connection to EN 1092-1

Nominal diameter	Nominal pressure	b	D	d_2	d_4	d_5	d_M with tube	d_M without tube	f	k	n	L
		mm	mm	mm	mm	mm	mm	mm	mm	mm	mm	mm
DN 40	PN 10/16/25/40	16	150	18	88	38	30	42	2	110	4	0, 50, 100, 150 or 200
	PN 63/100	24	170	22	88	38	30	42	2	125	4	
	PN 160	26	170	22	88	38	30	42	2	125	4	
DN 50	PN 10/16/25/40	18	165	18	102	48.3	40	51	2	125	4	
	PN 63/100	26	195	26	102	48.3	40	51	2	145	4	
	PN 160	28	195	26	102	48.3	40	51	2	145	4	
DN 80	PN 10/16/25/40	22	200	18	138	76	65	85	2	160	8	
	PN 100	30	230	26	138	76	65	85	2	180	8	
DN 100	PN 10/16	18	220	18	158	94	85	85	2	180	8	
	PN 25/40	22	235	22	162	94	85	85	2	190	8	
DN 125	PN 16	20	250	18	188	127	85	116	2	210	8	
	PN 40	24	270	26	188	127	85	116	2	220	8	

Connection according to ASME B16.5

Nominal diameter	Nominal pressure	b	D	d_2	d_4	d_5	d_M with tube	d_M without tube	f	k	n	L
	lb/sq.in.	inch (mm)	inch (mm)	inch (mm)	inch (mm)	inch (mm)	inch (mm)	inch (mm)	inch (mm)	inch (mm)		inch (mm)
1½ inch	150	0.63 (15.9)	4.92 (125)	0.63 (15.9)	2.87 (73)	1.5 (38)	1.18 (30)	1.42 (36)	0.08 (2)	3.87 (98.4)	4	0, 2, 3.94, 5.94 or 7.87 (0, 50, 100, 150 or 200)
	300	0.75 (19.1)	6.10 (155)	0.87 (22.2)	2.87 (73)	1.5 (38)	1.18 (30)	1.42 (36)	0.08 (2)	4.5 (114.3)	4	
	400/600	0.88 (22.3)	6.10 (155)	0.87 (22.2)	2.87 (73)	1.5 (38)	1.18 (30)	1.42 (36)	0.28 (7)	4.5 (114.3)	4	
	900/1500	1.25 (31.8)	7.09 (180)	1.13 (28.6)	2.87 (73)	1.5 (38)	1.18 (30)	1.42 (36)	0.28 (7)	4.87 (123.8)	4	
2 inch	150	0.69 (17.5)	5.91 (150)	0.75 (19.1)	3.63 (92.1)	1.9 (48.3)	1.57 (40)	2.01 (51)	0.08 (2)	4.75 (120.7)	4	
	300	0.81 (20.7)	6.5 (165)	0.75 (19.1)	3.63 (92.1)	1.9 (48.3)	1.57 (40)	2.01 (51)	0.08 (2)	5 (127)	8	
	400/600	1.00 (25.4)	6.5 (165)	0.75 (19.1)	3.63 (92.1)	1.9 (48.3)	1.57 (40)	2.01 (51)	0.28 (7)	5 (127)	8	
	900/1500	1.5 (38.1)	8.46 (215)	1.00 (25.4)	3.63 (92.1)	1.9 (48.3)	1.57 (40)	2.01 (51)	0.28 (7)	6.5 (165.1)	8	
3 inch	150	0.88 (22.3)	7.48 (190)	0.75 (19.1)	5 (127)	3 (76)	2.65 (65)	3.35 (85)	0.08 (2)	6 (152.4)	4	
	300	1.06 (27)	8.27 (210)	0.87 (22.2)	5 (127)	3 (76)	2.65 (65)	3.35 (85)	0.08 (2)	6.63 (168.3)	8	
	600	1.23 (31.8)	8.27 (210)	0.87 (22.2)	5 (127)	3 (76)	2.65 (65)	3.35 (85)	0.28 (7)	6.63 (168.3)	8	
	1500	1.88 (47.7)	10.43 (265)	1.25 (31.8)	5 (127)	3 (76)	2.65 (65)	3.35 (85)	0.28 (7)	8 (203.2)	8	
4 inch	150	0.88 (22.3)	9.06 (230)	0.75 (19.1)	6.19 (157.2)	3.69 (94)	3.35 (85)	3.35 (85)	0.08 (2)	7.5 (190.5)	8	
	300	1.19 (30.2)	10.04 (255)	0.87 (22.2)	6.19 (157.2)	3.69 (94)	3.35 (85)	3.35 (85)	0.08 (2)	7.87 (200)	8	
	400	1.38 (35)	10.04 (255)	0.87 (22.2)	6.19 (157.2)	3.69 (94)	3.35 (85)	3.35 (85)	0.28 (7)	7.87 (200)	8	
	1500	2.13 (54)	12.20 (310)	1.37 (34.9)	6.19 (157.2)	3.69 (94)	3.35 (85)	3.35 (85)	0.28 (7)	9.5 (241.3)	8	
5 inch	150	0.88 (22.3)	10.04 (255)	0.87 (22.2)	7.31 (185.7)	5 (127)	4.57 (116)	4.57 (116)	0.08 (2)	8.5 (215.9)	8	
	300	1.31 (33.4)	11.02 (280)	0.87 (22.2)	7.31 (185.7)	5 (127)	4.57 (116)	4.57 (116)	0.08 (2)	9.25 (235)	8	
	400	1.50 (38.1)	11.02 (280)	0.87 (22.2)	7.31 (185.7)	5 (127)	4.57 (116)	4.57 (116)	0.28 (7)	9.25 (235)	8	

© Siemens 2020

Process connection according to J.I.S

Nominal diameter	Nominal pressure	b	D	d_2	d_4	d_5	d_M with tube	d_M without tube	f	k	n	L
		mm (inch)	mm (inch)	mm (inch)	mm (inch)	mm (inch)	mm (inch)	mm (inch)	mm (inch)	mm (inch)		mm (inch)
DN 50	10K	14 (0.55)	155 (6.10)	19 (0.75)	96 (3.78)	48.3 (1.9)	40 (1.57)	51 (2.01)	2	120 (4.72)	4	0, 50, 100, 150 or 200 (0, 2, 3.94, 5.94 or 7.87)
	20K	16 (0.63)	165 (6.50)	19 (0.75)	96 (3.78)	48.3 (1.9)	40 (1.57)	51 (2.01)	2	120 (4.72)	8	
	40K	26 (1.02)	165 (6.50)	19 (0.75)	105 (4.13)	48.3 (1.9)	40 (1.57)	51 (2.01)	2	130 (5.12)	8	
DN 80	10K	16 (0.63)	185 (7.28)	19 (0.75)	126 (4.96)	76 (2.99)	65 (2.56)	85 (3.35)	2	150 (5.91)	8	
	20K	20 (0.79)	200 (7.87)	23 (0.91)	132 (5.20)	76 (2.99)	65 (2.56)	85 (3.35)	2	160 (6.30)	8	
	40K	32 (1.26)	210 (8.27)	23 (0.91)	140 (5.51)	76 (2.99)	65 (2.56)	85 (3.35)	2	170 (6.30)	8	
DN 100	10K	16 (0.63)	210 (8.27)	19 (0.75)	151 (5.94)	94 (3.7)	85 (3.35)	85 (3.35)	2	175 (6.89)	8	
	20K	22 (0.87)	225 (8.86)	23 (0.91)	160 (6.30)	94 (3.7)	85 (3.35)	85 (3.35)	2	185 (7.28)	8	
	40K	36 (1.42)	250 (9.84)	25 (0.98)	165 (6.50)	94 (3.7)	85 (3.35)	85 (3.35)	2	205 (8.07)	8	

d: Internal diameter of seal according to DIN 2690

d_M: Effective diaphragm diameter

© Siemens 2020

Overview

SITRANS P DS III pressure transmitters are digital pressure transmitters featuring extensive user-friendliness and high accuracy. The parameterization is performed using control keys or via HART, PROFIBUS-PA or FOUNDATION Fieldbus interface.

Extensive functionality enables the pressure transmitter to be precisely adapted to the plant's requirements. Operation is very simple in spite of the numerous setting options.

Transmitters with type of protection "Intrinsic safety" and "Explosion-proof" may be installed within potentially explosive atmospheres (zone 1) or in zone 0. The transmitters are provided with an EC type examination certificate and comply with the corresponding harmonized European standards (ATEX).

The transmitters can be equipped with various designs of remote seals for special applications such as the measurement of highly viscous substances.

Various versions of the DS III pressure transmitters are available for measuring:

- Gauge pressure
- Absolute pressure
- Differential pressure
- Level
- Volume level
- Mass level
- Volume flow
- Mass flow

Benefits

- High quality and service life
- High reliability even under extreme chemical and mechanical loads
- For aggressive and non-aggressive gases, vapors and liquids
- Extensive diagnosis and simulation functions
- Separate replacement of measuring cell and electronics without recalibration
- Minimum conformity error
- Good long-term stability
- Wetted parts made of high-grade materials (e.g. stainless steel, Hastelloy, gold, Monel, tantalum)
- Infinitely adjustable measuring spans from 0.01 bar to 700 bar (0.15 psi to 10153 psi) for DS III with HART interface
- Nominal measuring range from 1 bar to 700 bar (14.5 psi to 10153 psi) for DS III with PROFIBUS PA and FOUNDATION Fieldbus interface
- High measuring accuracy
- Parameterization over control keys and HART or PROFIBUS PA, or FOUNDATION Fieldbus interface.

Application

The pressure transmitters of the DS III series, can be used in industrial areas with extreme chemical and mechanical loads. Electromagnetic compatibility in the range 10 kHz to 1 GHz makes the DS III pressure transmitters suitable for locations with high electromagnetic emissions.

Pressure transmitters with type of protection "Intrinsic safety" and "Explosion-proof" may be installed within potentially explosive atmospheres (zone 1) or in zone 0. The pressure transmitters are provided with an EC type examination certificate and comply with the corresponding harmonized European standards (ATEX).

Pressure transmitters with the type of protection "Intrinsic safety" for use in zone 0 may be operated with power supply units of category "ia" and "ib".

The transmitters can be equipped with various designs of remote seals for special applications such as the measurement of highly viscous substances.

The pressure transmitter can be programmed locally using the 3 control buttons or externally via HART or PROFIBUS PA or FOUNDATION Fieldbus interface.

© Siemens 2020

Pressure transmitter for gauge pressure

Measured variable: Gauge pressure of aggressive and non-aggressive gases, vapors and liquids.

Measuring span (infinitely adjustable)
for DS III with HART: 0.01 bar to 700 bar (0.15 psi to 10153 psi)

Nominal measuring range
for DS III with PROFIBUS PA and FOUNDATION Fieldbus:
1 bar to 700 bar (14.5 psi to 10153 psi)

Pressure transmitters for absolute pressure

Measured variable: Absolute pressure of aggressive and non-aggressive gases, vapors and liquids.

Measuring span (infinitely adjustable)
for DS III with HART: 8.3 mbar a ... 100 bar a (0.12 ... 1450 psi a)

Nominal measuring range
for DS III with PROFIBUS PA and FOUNDATION Fieldbus:
250 mbar a ... 100 bar a (3.6 ... 1450 psi a)

There are two series:

- Gauge pressure series
- Differential pressure series

Pressure transmitters for differential pressure and flow

Measured variables:

- Differential pressure
- Small positive or negative pressure
- Flow $q \sim \sqrt{\Delta p}$ (together with a primary differential pressure device (see Chapter "Flow Meters"))

Measuring span (infinitely adjustable)
for DS III with HART: 1 mbar ... 30 bar (0.0145 ... 435 psi)

Nominal measuring range
for DS III with PROFIBUS PA and FOUNDATION Fieldbus:
20 mbar ... 30 bar (0.29 ... 435 psi)

Pressure transmitters for level

Measured variable: Level of aggressive and non-aggressive liquids in open and closed vessels.

Measuring span (infinitely adjustable)
for DS III with HART: 25 mbar ... 5 bar (0.363 ... 72.5 psi)

Nominal measuring range
for DS III with PROFIBUS PA and FOUNDATION Fieldbus:
250 mbar ... 5 bar (3.63 ... 72.5 psi)

Nominal diameter of the mounting flange

- DN 80 or DN 100
- 3 inch or 4 inch

In the case of level measurements in open containers, the low-pressure connection of the measuring cell remains open (measurement "compared to atmospheric").

In the case of measurements in closed containers, the lower-pressure connection has to be connected to the container in order to compensate the static pressure.

The wetted parts are made from a variety of materials, depending on the degree of corrosion resistance required.

Design

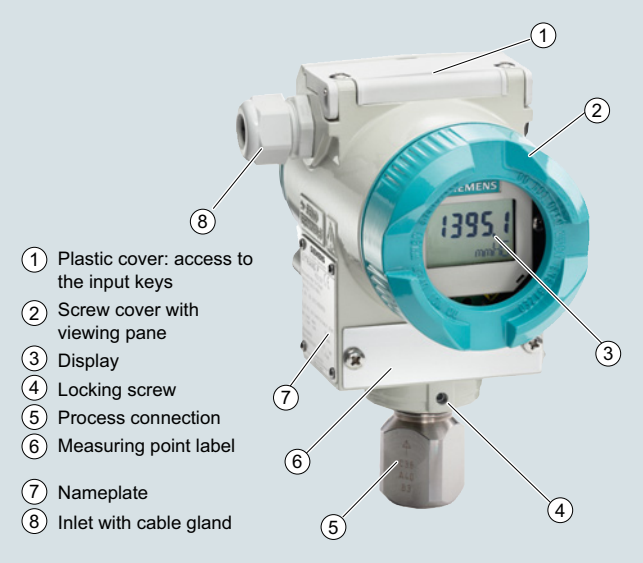

Front view

The transmitter consists of various components depending on the order. The possible versions are listed in the ordering information. The components described below are the same for all transmitters.

The rating plate (7, Figure "Front view") with the Article No. is located on the side of the enclosure. The specified number together with the ordering information provide details on the optional design details and on the possible measuring range (physical properties of built-in sensor element).

The approval label is located on the opposite side.

The enclosure is made of die-cast aluminium or stainless steel precision casting. A round cover (6) is screwed on at the front and rear of the enclosure. The front cover can be fitted with a viewing pane so that the measured values can be read directly on the display. The inlet (8) for the electrical connection is located either on the left or right side. The unused opening on the opposite side is sealed by a blanking plug. The protective earth connection is located on the rear of the enclosure.

The electrical connections for the power supply and screen are accessible by unscrewing the rear cover. The bottom part of the enclosure contains the measuring cell with process connection (5). The measuring cell is prevented from rotating by a locking screw (4). As the result of this modular design, the measuring cell and the electronics can be replaced separately from each other. The set parameter data are retained.

At the top of the enclosure is a plastic cover (1), which hides the input keys.

Example for an attached measuring point label

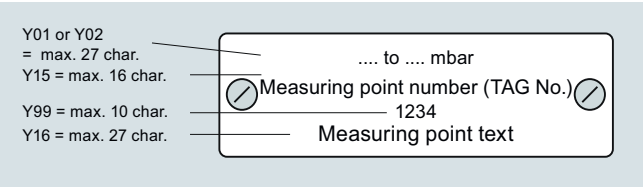

© Siemens 2020

Function

Operation of electronics with HART communication

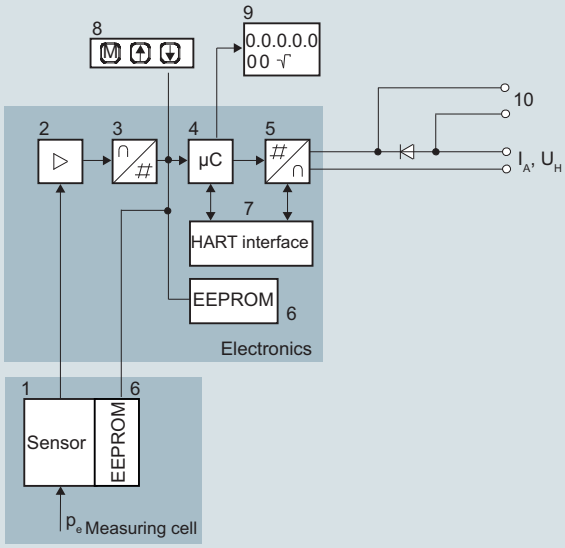

1 Measuring cell sensor
2 Instrument amplifier
3 Analog-to-digital converter
4 Microcontroller
5 Digital-to-analog converter
6 One non-volatile memory each in the measuring cell and electronics
7 HART interface
8 Three input keys (local operation)
9 Digital display
10 Diode circuit and connection for external ammeter
I_A Output current
U_H Power supply
P_e Input variable

Function diagram of electronics

The bridge output voltage created by the sensor (1, Figure "Function diagram of the electronics") is amplified by the measuring amplifier (2) and digitized in the analog-to-digital converter (3). The digital information is evaluated in a microcontroller, its linearity and temperature response corrected, and converted in a digital-to-analog converter (5) into an output current of 4 to 20 mA.

The diode circuit (10) protects against incorrect polarity.

The data specific to the measuring cell, the electronics data, and the parameter data are stored in the two non-volatile memories (6). The one memory is coupled to the measuring cell, the other to the electronics. As the result of this modular design, the electronics and the measuring cell can be replaced separately from each other.

Using the 3 input keys (8) you can parameterize the pressure transmitter directly at the measuring point. The input buttons can also be used to control the view of the results, the error messages and the operating modes on the display (9).

The HART modem (7) permits parameterization using a protocol according to the HART specification.

The pressure transmitters with measuring spans ≤ 63 bar measure the input pressure compared to atmosphere, transmitters with measuring spans ≥ 160 bar compared to vacuum.

Operation of electronics with PROFIBUS PA communication

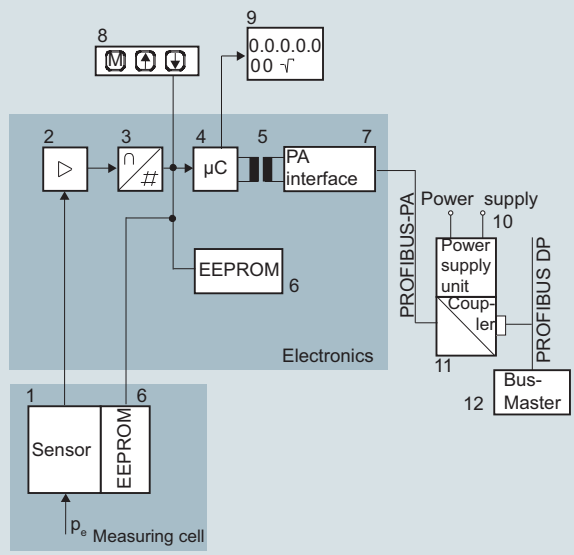

1 Measuring cell sensor
2 Instrument amplifier
3 Analog-to-digital converter
4 Microcontroller
5 Electrical isolation
6 One non-volatile memory each in the measuring cell and electronics
7 PROFIBUS-PA interface
8 Three input keys (local operation)
9 Digital display
10 Power supply
11 DP/PA coupler or link
12 Bus master
p_e Input variable

Function diagram of electronics

The bridge output voltage created by the sensor (1, Figure "Function diagram of the electronics") is amplified by the measuring amplifier (2) and digitized in the analog-to-digital converter (3). The digital information is evaluated in the microcontroller, its linearity and temperature response corrected, and provided on the PROFIBUS PA through an electrically isolated PA interface (7).

The data specific to the measuring cell, the electronics data, and the parameter data are stored in the two non-volatile memories (6). The one memory is coupled to the measuring cell, the other to the electronics. As the result of this modular design, the electronics and the measuring cell can be replaced separately from each other.

Using the three input buttons (8) you can parameterize the pressure transmitter directly at the measuring point. The input buttons can also be used to control the view of the results, the error messages and the operating modes on the display (9).

The results with status values and diagnostic values are transferred by cyclic data transmission on the PROFIBUS PA. Parameterization data and error messages are transferred by acyclic data transmission. Special software such as SIMATIC PDM is required for this.

© Siemens 2020

Operation of electronics with FOUNDATION Fieldbus communication

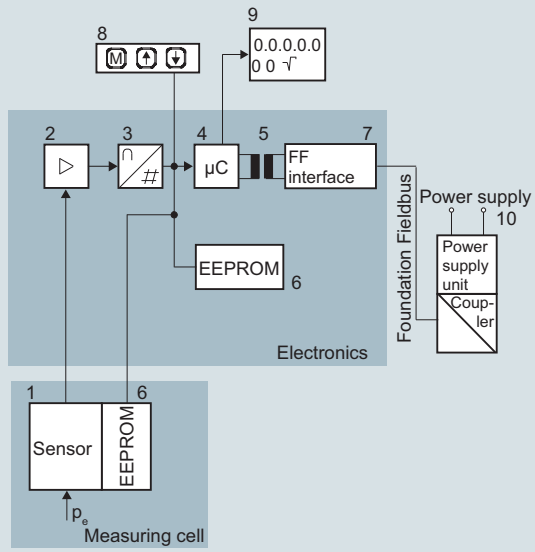

1	Measuring cell sensor	8	Three input keys (local operation)
2	Instrument amplifier	9	Digital display
3	Analog-to-digital converter	10	Power supply
4	Microcontroller		
5	Electrical isolation		
6	One non-volatile memory each in the measuring cell and electronics	p_e	Input variable
7	FF interface		

Function diagram of electronics

The bridge output voltage created by the sensor (1, Figure "Function diagram of electronics") is amplified by the measuring amplifier (2) and digitized in the analog-to-digital converter (3). The digital information is evaluated in the microcontroller, its linearity and temperature response corrected, and provided on the FOUNDATION Fieldbus through an electrically isolated FOUNDATION Fieldbus interface (7).

The data specific to the measuring cell, the electronics data, and the parameter data are stored in the two non-volatile memories (6). The one memory is coupled to the measuring cell, the other to the electronics. As the result of this modular design, the electronics and the measuring cell can be replaced separately from each other.

Using the three input buttons (8) you can parameterize the pressure transmitter directly at the measuring point. The input buttons can also be used to control the view of the results, the error messages and the operating modes on the display (9).

The results with status values and diagnostic values are transferred by cyclic data transmission on the FOUNDATION Fieldbus. Parameterization data and error messages are transferred by acyclic data transmission. Special software such as National Instruments Configurator is required for this.

Mode of operation of the measuring cells

Measuring cell for gauge pressure

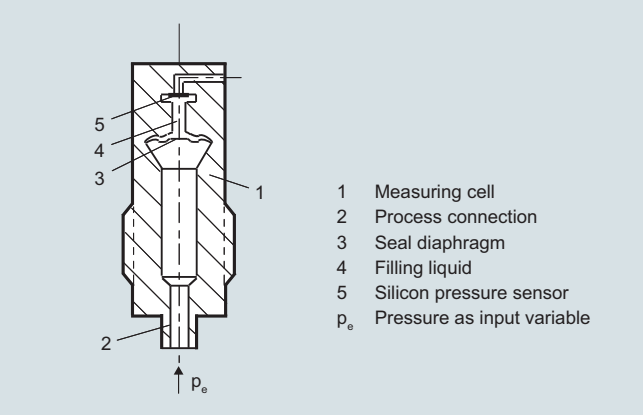

Measuring cell for gauge pressure, function diagram

The pressure p_e is applied through the process connection (2, Figure "Measuring cell for gauge pressure, function diagram) to the measuring cell (1). This pressure is subsequently transmitted further through the seal diaphragm (3) and the filling liquid (4) to the silicon pressure sensor (5) whose measuring diaphragm is then flexed. This changes the resistance of the four piezo-resistors fitted in the diaphragm in a bridge circuit. This change in resistance results in a bridge output voltage proportional to the absolute pressure.

Measuring cell for gauge pressure with front-flush diaphragm

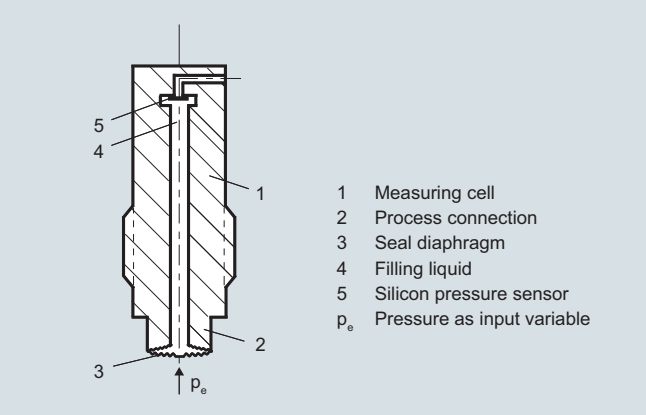

Measuring cell for gauge pressure, with front-flush diaphragm for paper industry, function diagram

The pressure p_e is applied through the process connection (2, Figure "Measuring cell for gauge pressure, with front-flush diaphragm for paper industry, function diagram") to the measuring cell (1). This pressure is subsequently transmitted further through the seal diaphragm (3) and the filling liquid (4) to the silicon pressure sensor (5) whose measuring diaphragm is then flexed. This changes the resistance of the four piezo-resistors fitted in the diaphragm in a bridge circuit. This change in resistance results in a bridge output voltage proportional to the absolute pressure.

© Siemens 2020

Measuring cell for absolute pressure from gauge pressure series

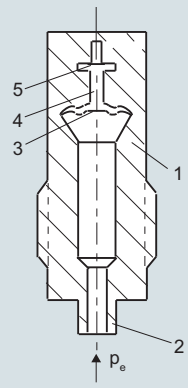

1 Measuring cell
2 Process connection
3 Seal diaphragm
4 Filling liquid
5 Silicon absolute pressure sensor
p_e Absolute pressure as input variable

Measuring cell for absolute pressure from the pressure series, function diagram

The absolute pressure p_e is transmitted through the seal diaphragm (3, Figure "Measuring cell for absolute pressure from pressure series, gauge pressure, function diagram ") and the filling liquid (4) to the silicon absolute pressure sensor (5) whose measuring diaphragm is then flexed. This changes the resistance of the four piezo-resistors fitted in the diaphragm in a bridge circuit. This change in resistance results in a bridge output voltage proportional to the absolute pressure.

Measuring cell for absolute pressure from differential pressure series

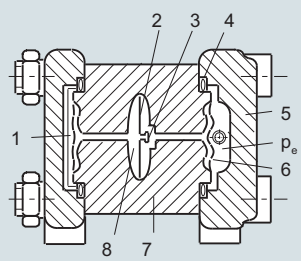

1 Reference vacuum
2 Overload diaphragm
3 Silicon pressure sensor
4 O-ring
5 Process flange
6 Seal diaphragm
7 Body of measuring cell
8 Filling liquid
p_e Absolute pressure as input variable

Measuring cell for absolute pressure from differential pressure series, function diagram

The input pressure p_e is transmitted through the seal diaphragm (6, Figure "Measuring cell for absolute pressure from differential pressure series, function diagram") and the filling liquid (8) to the silicon pressure sensor (3).

The difference in pressure between the input pressure p_e and the reference vacuum (1) on the low-pressure side of the measuring cell flexes the measuring diaphragm. This changes the resistance of the four piezo-resistors fitted in the diaphragm in a bridge circuit. This change in resistance results in a bridge output voltage proportional to the absolute pressure.

An overload diaphragm is installed to provide protection from overloads. If the measuring limits are exceeded, the overload diaphragm (2) is flexed until the seal diaphragm rests on the body of the measuring cell (7), thus protecting the silicon pressure sensor from overloads.

Measuring cell for differential pressure and flow

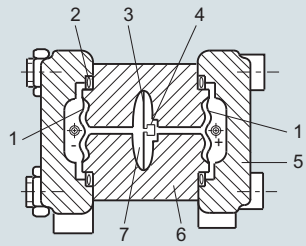

1 Seal diaphragm
2 O-ring
3 Overload diaphragm
4 Silicon pressure sensor
5 Process flange
6 Body of measuring cell
7 Filling liquid

Measuring cell for differential pressure and flow, function diagram

The differential pressure is transmitted through the seal diaphragms (1, Figure "Measuring cell for differential pressure and flow, function diagram") and the filling liquid (7) to the silicon pressure sensor (4).

The measuring diaphragm is flexed by the applied differential pressure. This changes the resistance of the four piezo-resistors fitted in the diaphragm in a bridge circuit. This change in resistance results in a bridge output voltage proportional to the differential pressure.

An overload diaphragm is installed to provide protection from overloads. If the measuring limits are exceeded, the overload diaphragm (3) is flexed until the seal diaphragm rests on the body of the measuring cell (6), thus protecting the silicon pressure sensor from overloads.

Measuring cell for level

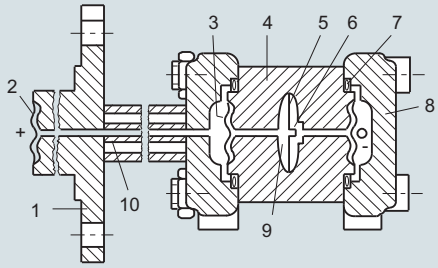

1 Flange with tube
2 Seal diaphragm on mounting flange
3 Seal diaphragm
4 Body of measuring cell
5 Overload diaphragm
6 Silicon pressure sensor
7 O-ring
8 Process flange
9 Filling liquid
10 Capillary with filling liquid of mounting flange

Measuring cell for level, function diagram

The input pressure (hydrostatic pressure) acts hydraulically on the measuring cell through the seal diaphragm on the mounting flange (2, Figure "Measuring cell for level, function diagram"). This differential pressure is subsequently transmitted further through the measuring cell (3) and the filling liquid (9) to the silicon pressure sensor (6) whose measuring diaphragm is then flexed.

This changes the resistance of the four piezo-resistors fitted in the diaphragm in a bridge circuit.

This change in resistance results in a bridge output voltage proportional to the differential pressure.

An overload diaphragm is installed to provide protection from overloads. If the measuring limits are exceeded, the overload diaphragm (5) is flexed until the seal diaphragm rests on the body of the measuring cell (4), thus protecting the silicon pressure sensor from overloads.

© Siemens 2020

Parameterization DS III

Depending on the version, there are a range of options for parameterizing the pressure transmitter and for setting or scanning the parameters.

Parameterization using the input buttons (local operation)

With the input buttons you can easily set the most important parameters without any additional equipment.

Parameterization using HART

Parameterization using HART is performed with a HART Communicator or a PC.

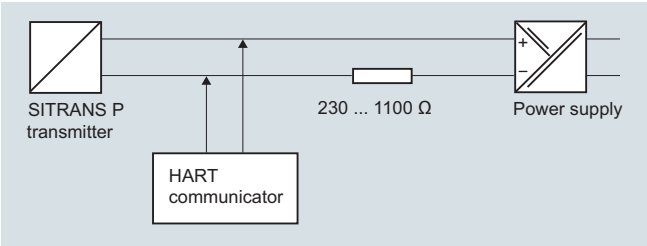

Communication between a HART Communicator and a pressure transmitter

When parameterizing with the HART Communicator, the connection is made directly to the 2-wire cable.

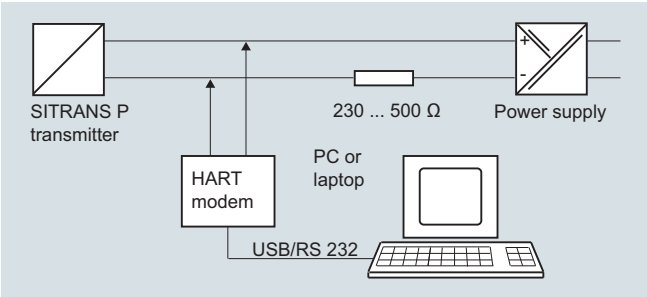

HART communication between a PC communicator and a pressure transmitter

When parameterizing with a PC, the connection is made through a HART modem.

The signals needed for communication in conformity with the HART 5.x or 6.x protocols are superimposed on the output current using the Frequency Shift Keying (FSK) method.

Adjustable parameters, DS III with HART

Parameters	Input keys (DS III HART)	HART communication
Lower range value	x	x
Upper range value	x	x
Electrical damping	x	x
Lower range value without application of a pressure ("Blind setting")	x	x
Upper range value without application of a pressure ("Blind setting")	x	x
Zero adjustment	x	x
Current transmitter	x	x
Fault current	x	x
Disabling of buttons, write protection	x	x[1)]
Type of dimension and actual dimension	x	x
Characteristic (linear / square-rooted)	x[2)]	x[2)]
Input of characteristic		x
Freely-programmable LCD		x
Diagnostic functions		x

1) Cancel apart from write protection
2) Only differential pressure

Diagnostic functions for DS III with HART

- Zero correction display
- Event counter
- Limit transmitter
- Saturation alarm
- Slave pointer
- Simulation functions
- Maintenance timer

Available physical units of display for DS III with HART

Table style: Technical specifications 2

Physical variable	Physical dimensions
Pressure (setting can also be made in the factory)	Pa, MPa, kPa, bar, mbar, torr, atm, psi, g/cm^2, kg/cm^2, inH_2O, inH_2O (4 °C), mmH_2O, ftH_2O (20 °C), inHg, mmHg
Level (height data)	m, cm, mm, ft, in
Volume	m^3, dm^3, hl, yd^3, ft^3, in^3, US gallon, Imp. gallon, bushel, barrel, barrel liquid
Mass	g, kg, t, lb, Ston, Lton, oz
volume flow	m^3/d, m^3/h, m^3/s, l/min, l/s, ft^3/d, ft^3/min, ft^3/s, US gallon/min, US gallon/s
Mass flow	t/d, t/h, t/min, kg/d, kg/h, kg/min, kg/s, g/d, g/h, g/min, g/s, lb/d, lb/h, lb/min, lb/s, LTon/d, LTon/h, STon/d, STon/h, STon/min
Temperature	K, °C, °F, °R
Miscellaneous	%, mA

Parameterization through PROFIBUS PA interface

Fully digital communication through PROFIBUS PA, profile 3.0, is particularly user-friendly. Through the PROFIBUS the DS III with PROFIBUS PA is connected to a process control system, e. g. SIMATIC PSC 7. Communication is possible even in a potentially explosive environment.

For parameterization through PROFIBUS you need suitable software, e.g. SIMATIC PDM (Process Device Manager).

Parameterization through FOUNDATION Fieldbus interface

Fully digital communication through FOUNDATION Fieldbus is particularly user-friendly. Through the FOUNDATION Fieldbus the DS III with FOUNDATION Fieldbus is connected to a process control system. Communication is possible even in a potentially explosive environment.

For parameterization through the FOUNDATION Fieldbus you need suitable software, e.g. National Instruments Configurator.

Adjustable parameters for DS III with PROFIBUS PA and FOUNDATION Fieldbus

Parameters	Input keys	PROFIBUS PA and FOUNDATION Fieldbus interface
Electrical damping	x	x
Zero adjustment (correction of position)	x	x
Buttons and/or function disabling	x	x
Source of measured-value display	x	x
Physical dimension of display	x	x
Position of decimal point	x	x
Bus address	x	x
Adjustment of characteristic	x	x
Input of characteristic		x
Freely-programmable LCD		x
Diagnostics functions		x

© Siemens 2020

Diagnostic functions for DS III with PROFIBUS PA and FOUNDATION Fieldbus

- Event counter
- Slave pointer
- Maintenance timer
- Simulation functions
- Display of zero correction
- Limit transmitter
- Saturation alarm

Physical dimensions available for the display

Physical variable	Physical dimensions
Pressure (setting can also be made in the factory)	MPa, kPa, Pa, bar, mbar, torr, atm, psi, g/cm^2, kg/cm^2, mmH_2O, mmH_2O (4 °C), inH_2O, inH_20 (4 °C), ftH_2O (20 °C), mmHg, inHg
Level (height data)	m, cm, mm, ft, in, yd
Volume	m^3, dm^3, hl, yd^3, ft^3, in^3, US gallon, Imp. gallon, bushel, barrel, barrel liquid
volume flow	m^3/s, m^3/min, m^3/h, m^3/d, l/s, l/min, l/h, l/d, Ml/d, ft^3/s, ft^3/min, ft^3/h, ft^3/d, US gallon/s, US gallon/min, US gallon/h, US gallon/d, bbl/s, bbl/min, bbl/h, bbl/d
Mass flow	g/s, g/min, g/h, g/d, kg/s, kg/min, kg/h, kg/d, t/s, t/min, t/h, /t/d, lb/s, lb/min, lb/h, lb/d, STon/s, STon/min, STon/h, STon/d, LTon/s, LTon/min, LTon/h, LTon/d
Total mass flow	t, kg, g, lb, oz, LTon, STon
Temperature	K, °C, °F, °R
Miscellaneous	%

© Siemens 2020

Technical specifications

SITRANS P, DS III series for gauge pressure				
Input				
Measured variable	Gauge pressure			
Measuring span (fully adjustable) or nominal measuring range, max. operating pressure (in accordance with 2014/68/EU Pressure Equipment Directive) and max. test pressure (pursuant to DIN 16086)	**HART**	**PROFIBUS PA/ FOUNDATION Fieldbus**		
(for oxygen measurement, max. 100 bar/10 MPa/1450 psi and 60 °C (140 °F) ambient temperature/temperature of medium)	Measuring span	Nominal measuring range	Max. operating pressure MAWP (PS)	Max. perm. test pressure
	8.3 ... 250 mbar 0.83 ... 25 kPa 0.12 ... 3.6 psi	250 mbar 25 kPa 3.6 psi	4 bar 400 kPa 58 psi	6 bar 600 kPa 87 psi
	0.01 ... 1 bar 1 ... 100 kPa 0.15 ... 14.5 psi	1 bar 100 kPa 14.5 psi	4 bar 400 kPa 58 psi	6 bar 600 kPa 87 psi
	0.04 ... 4 bar 4 ... 400 kPa 0.58 ... 58 psi	4 bar 400 kPa 58 psi	7 bar 0.7 MPa 102 psi	10 bar 1 MPa 145 psi
	0.16 ... 16 bar 16 ... 1600 kPa 2.3 ... 232 psi	16 bar 1600 kPa 232 psi	21 bar 2.1 MPa 305 psi	32 bar 3.2 MPa 464 psi
	0.63 ... 63 bar 63 ... 6300 kPa 9.1 ... 914 psi	63 bar 6300 kPa 914 psi	67 bar 6.7 MPa 972 psi	100 bar 10 MPa 1450 psi
	1.6 ... 160 bar 0.16 ... 16 MPa 23 ... 2321 psi	160 bar 16 MPa 2321 psi	167 bar 16.7 MPa 2422 psi	250 bar 25 MPa 3626 psi
	4 ... 400 bar 0.4 ... 40 MPa 58 ... 5802 psi	400 bar 40 MPa 5802 psi	400 bar 40 MPa 5802 psi	600 bar 60 MPa 8702 psi
	7 ... 700 bar 0.7 ... 70 MPa 102 ... 10153 psi	700 bar 70 MPa 10153 psi	800 bar 80 MPa 11603 psi	800 bar 80 MPa 11603 psi
Lower measuring limit (for 250mbar/25 kPa/3.6 psi measuring cells, the lower measuring limit is 750 mbar a/75 kPa a/10.8 psi a. The measuring cell is vacuum-resistant upt to 30 mbar a/3 kPa a/0.44 psi a.)				
• Measuring cell with silicone oil filling	30 mbar a/3 kPa a/0.44 psi a			
• Measuring cell with inert filling liquid	30 mbar a/3 kPa a/0.44 psi a			
Upper measuring limit	100% of max. measuring span (max. 100 bar/10 MPa/1450 psi for oxygen measurement) ambient temperature/temperature of medium 60 °C (140 °F)			

Output	**HART**	**PROFIBUS PA/FOUNDATION Fieldbus**
Output signal	4 ... 20 mA	Digital PROFIBUS PA and FOUNDATION Fieldbus signal
• Lower limit (infinitely adjustable)	3.55 mA, factory preset to 3.84 mA	-
• Upper limit (infinitely adjustable)	23 mA, factory preset to 20.5 mA or optionally set to 22.0 mA	-
Load		
• Without HART	$R_B \leq (U_H - 10.5\ V)/0.023\ A$ in Ω, U_H: Power supply in V	-
• With HART	R_B = 230 ... 500 Ω (SIMATIC PDM) bzw. R_B = 230 ... 1100 Ω (HART-Communicator)	-
Physical bus	-	IEC 61158-2
Protection against polarity reversal	Protected against short-circuit and polarity reversal. Each connection against the other with max. supply voltage.	
Electrical damping (step width 0.1 s)	Set to 2 s (0 ... 100 s)	

© Siemens 2020

SITRANS P, DS III series for gauge pressure		
Measuring accuracy	Acc. to IEC 60770-1	
Reference conditions	• Increasing characteristic • Lower range value 0 bar/kPa/psi • Stainless steel seal diaphragm • Silicone oil filling • Room temperature 25 °C (77 °F)	
Measuring span ratio r (spread, Turn-Down)	r = max. measuring span/set measuring span or nominal measuring range	
Error in measurement at limit setting incl. hysteresis and reproducibility		
• Linear characteristic		
- 250 mbar/25 kPa/3.6 psi	r ≤ 1.25 : 1.25 < r ≤ 30 :	≤ 0.065 % ≤ (0.008 · r + 0.055) %
- 1 bar/100 kPa/14.5 psi 4 bar/400 kPa/58 psi 16 bar/1.6 MPa/232 psi 63 bar/6.3 MPa/914 psi 160 bar/16 MPa/2321 psi	r ≤ 5 : 5 < r ≤ 100 :	≤ 0.065 % ≤ (0.004 · r + 0.045) %
- 400 bar/40 MPa/5802 psi 700 bar/70 MPa/10152 psi	r ≤ 3 : 3 < r ≤ 10 : 10 < r ≤ 100 :	≤ 0.075 % ≤ (0.0029 · r + 0.071) % ≤ (0.005 · r + 0.05) %
Influence of ambient temperature (in percent per 28 °C (50 °F))		
• 250 mbar/25 kPa/3.6 psi	≤ (0.16 · r + 0.1) %	
• 1 bar/100 kPa/14.5 psi	≤ (0.05 · r + 0.1) %	
• 4 bar/400 kPa/58 psi 16 bar/1.6 MPa/232 psi 63 bar/6.3 MPa/914 psi 160 bar/16 MPa/2321 psi 400 bar/40 MPa/5802 psi	≤ (0.025 · r + 0.125) %	
• 700 bar/70 MPa/10152 psi	≤ (0.08 · r + 0.16) %	
Long-term stability (temperature change ± 30 °C (± 54 °F))		
• 250 mbar/25 kPa/3.6 psi	≤ (0.25 · r) % per year	
• 1 bar/100 kPa/14.5 psi 4 bar/400 kPa/58 psi	≤ (0.25 · r) % in 5 years	
• 16 bar/1.6 MPa/232 psi 63 bar/6.3 MPa/914 psi 160 bar/16 MPa/2321 psi 400 bar/40 MPa/5802 psi	≤ (0.125 · r) % in 5 years	
• 700 bar/70 MPa/10152 psi	≤ (0.25 · r) % in 5 years	
Effect of mounting position	≤ 0.05 mbar/0.005 kPa/0.000725 psi per 10° inclination (zero point correction is possible with position error compensation)	
Effect of auxiliary power supply (in percent per change in voltage)	0.005 % per 1 V	
Measuring value resolution for PROFIBUS PA and FOUNDATION Fieldbus	$3 \cdot 10^{-5}$ of nominal measuring range	

© Siemens 2020

SITRANS P, DS III series for gauge pressure		
Operating conditions		
Degree of protection		
• according to EN 60529	IP66 (optional IP66/IP68)	
• according to NEMA 250	Type 4X	
Temperature of medium		
• Measuring cell with silicone oil filling	-40 ... +100 °C (-40 ... +212 °F)	
• Measuring cell with inert filling liquid		
- 1 bar/100 kPa/14.5 psi 4 bar/400 kPa/58 psi 16 bar/1.6 MPa/232 psi 63 bar/6.3 MPa/914 psi	-40 ... +85 °C (-40 ... +185 °F)	
- 160 bar/16 MPa/2321 psi 400 bar/40 MPa/5802 psi 700 bar/70 MPa/10152 psi	-20 ... +100 °C (-4 ... +212 °F)	
• Measuring cell with Neobee fill fluid (FDA-compliant)	-10 ... +100 °C (+14 ... +212 °F)	
• In conjunction with dust explosion protection	-20 ... +60 °C (-4 ... +140 °F)	
Ambient conditions		
• Ambient temperature (silicone oil and inert oil)		
- Transmitter	-40 ... +85 °C (-40 ... +185 °F)	
- Display readable	-30 ... +85 °C (-22 ... +185 °F)	
• Ambient temperature (Neobee fill fluid)		
- Transmitter	-10 ... +85 °C (+14 ... +185 °F)	
• Storage temperature	-50 ... +85 °C (-58 ... +185 °F)	
• Climatic class		
- Condensation	Relative humidity 0 ... 100 %/Condensation permissible, suitable for use in the tropics	
• Electromagnetic Compatibility		
- Emitted interference and interference immunity	Acc. to IEC 61326 and NAMUR NE 21	
Design		
Weight (without options)	Die-cast aluminum: ≈ 2.0 kg (≈ 4.4 lb) Stainless steel precision casting: ≈ 4.6 kg (≈ 10.1 lb)	
Enclosure material	Low-copper die-cast aluminum, GD-AlSi 12 or stainless steel precision casting, mat. no. 1.4408	
Wetted parts materials		
• Connection shank	Stainless steel, mat. no. 1.4404/316L or Hastelloy C4, mat. no. 2.4602	
• Oval flange	Stainless steel, mat. no. 1.4404/316L	
• Seal diaphragm	Stainless steel, mat. no. 1.4404/316L or Hastelloy C276, mat. no. 2.4819	
Measuring cell filling	Silicone oil or inert filling liquid (maximum value with oxygen measurement pressure 100 bar (1450 psi) at 60 °C (140 °F))	
Process connection	Connection shank G½B to DIN EN 837-1, female thread ½ -14 NPT or oval flange (PN 160 (MAWP 2320 psi)) to DIN 19213 with mounting thread M10 or $^{7}/_{16}$-20 UNF to IEC 61518/DIN EN 61518	
Material of mounting bracket		
• Steel	Sheet-steel, Mat. No. 1.0330, chrome-plated	
• Stainless steel 304	Sheet stainless steel, mat. no. 1.4301 (SS 304)	
• Stainless steel 316L	Sheet stainless steel, mat. no. 1.4404 (SS 316L)	
Power supply U_H	**HART**	**PROFIBUS PA/FOUNDATION Fieldbus**
Terminal voltage on transmitter	10.5 ... 45 V DC 10.5 ... 30 V DC in intrinsically-safe mode	-
Power supply	-	Supplied through bus
Separate supply voltage	-	Not necessary
Bus voltage		
• Not Ex	-	9 ... 32 V
• With intrinsically-safe operation	-	9 ... 24 V
Current consumption		
• Basic current (max.)	-	12.5 mA
• Start-up current ≤ basic current	-	Yes
• Max. current in event of fault	-	15.5 mA
Fault disconnection electronics (FDE) available	-	Yes

© Siemens 2020

SITRANS P, DS III series for gauge pressure	HART	PROFIBUS PA/ FOUNDATION Fieldbus
Certificates and approvals		
Classification according to PED 2014/68/EU	For gases of fluid group 1 and liquids of fluid group 1; complies with requirements of article 4, paragraph 3 (sound engineering practice)	
Explosion protection		
• Intrinsic safety "i"	PTB 13 ATEX 2007 X	
- Marking	Ex II 1/2 G Ex ia/ib IIC T4/T5/T6 Ga/Gb	
- Permissible ambient temperature	-40 ... +85 °C (-40 ... +185 °F) temperature class T4; -40 ... +70 °C (-40 ... +158 °F) temperature class T5; -40 ... +60 °C (-40 ... +140 °F) temperature class T6	
- Connection	To certified intrinsically-safe circuits with peak values: U_i = 30 V, I_i = 100 mA, P_i = 750 mW; R_i = 300 Ω	FISCO supply unit: U_o = 17.5 V, I_o = 380 mA, P_o = 5.32 W Linear barrier: U_o = 24 V, I_o = 174 mA, P_o = 1 W
- Effective internal inductance/capacitance	L_i = 0.4 mH, C_i = 6 nF	L_i = 7 µH, C_i = 1.1 nF
• Explosion-proof "d"	PTB 99 ATEX 1160	
- Marking	Ex II 1/2 G Ex d IIC T4/T6 Gb	
- Permissible ambient temperature	-40 ... +85 °C (-40 ... +185 °F) temperature class T4; -40 ... +60 °C (-40 ... +140 °F) temperature class T6	
- Connection	To circuits with values: U_H = 10.5 ... 45 V DC	To circuits with values: U_H = 9 ... 32 V DC
• Dust explosion protection for zone 20	PTB 01 ATEX 2055	
- Marking	Ex II 1 D Ex ta IIIC T120°C Da Ex II 1/2 D Ex ta/tb IIIC T120°C Da/Db	
- Permissible ambient temperature	-40 ... +85 °C (-40 ... +185 °F)	
- Max. surface temperature	120 °C (248 °F)	
- Connection	To certified intrinsically-safe circuits with peak values: U_i = 30 V, I_i = 100 mA, P_i = 750 mW, R_i = 300 Ω	FISCO supply unit: U_o = 17.5 V, I_o = 380 mA, P_o = 5.32 W Linear barrier: U_o = 24 V, I_o = 250 mA, P_o = 1 W
- Effective internal inductance/capacitance	L_i = 0.4 mH, C_i = 6 nF	L_i = 7 µH, C_i = 1.1 nF
• Dust explosion protection for zone 21/22	PTB 01 ATEX 2055	
- Marking	Ex II 2 D Ex tb IIIC T120°C Db	
- Connection	To circuits with values: U_H = 10.5 ... 45 V DC; P_{max} = 1.2 W	To circuits with values: U_H = 9 ... 32 V DC; P_{max} = 1 W
• Type of protection "n" (zone 2)	PTB 13 ATEX 2007 X	
- Marking	Ex II 2/3 G Ex nA IIC T4/T5/T6 Gb/Gc Ex II 2/3 G Ex ic IIC T4/T5/T6 Gb/Gc	
- Connection (Ex nA)	U_m = 45 V	U_m = 32 V
- Connections (Ex ic)	To circuits with values: U_i = 45 V	FISCO supply unit ic: U_o = 17.5 V, I_o = 570 mA Linear barrier: U_o = 32 V, I_o = 132 mA, P_o = 1 W
- Effective internal inductance/capacitance	L_i = 0.4 mH, C_i = 6 nF	L_i = 7 µH, C_i = 1.1 nF
• Explosion protection acc. to FM	Certificate of Compliance 3008490	
- Identification (XP/DIP) or (IS); (NI)	CL I, DIV 1, GP ABCD T4...T6; CL II, DIV 1, GP EFG; CL III; CL I, ZN 0/1 AEx ia IIC T4...T6; CL I, DIV 2, GP ABCD T4...T6; CL II, DIV 2, GP FG; CL III	
• Explosion protection to CSA	Certificate of Compliance 1153651	
- Identification (XP/DIP) or (IS)	CL I, DIV 1, GP ABCD T4...T6; CL II, DIV 1, GP EFG; CL III; Ex ia IIC T4...T6; CL I, DIV 2, GP ABCD T4...T6; CL II, DIV 2, GP FG; CL III	

© Siemens 2020

HART communication	
HART	230 ... 1100 Ω
Protocol	HART Version 5.x
Software for computer	SIMATIC PDM
PROFIBUS PA communication	
Simultaneous communication with master class 2 (max.)	4
The address can be set using	Configuration tool or local operation (standard setting address 126)
Cyclic data usage	
• Output byte	5 (one measured value) or 10 (two measured values)
• Input byte	0, 1, or 2 (register operating mode and reset function for metering)
Internal preprocessing	
Device profile	PROFIBUS PA Profile for Process Control Devices Version 3.0, class B
Function blocks	2
• Analog input	
- Adaptation to customer-specific process variables	Yes, linearly rising or falling characteristic
- Electrical damping, adjustable	0 ... 100 s
- Simulation function	Input /Output
- Failure mode	parameterizable (last good value, substitute value, incorrect value)
- Limit monitoring	Yes, one upper and lower warning limit and one alarm limit respectively
• Register (totalizer)	Can be reset, preset, optional direction of counting, simulation function of register output
- Failure mode	parameterizable (summation with last good value, continuous summation, summation with incorrect value)
- Limit monitoring	One upper and lower warning limit and one alarm limit respectively
• Physical block	1
Transducer blocks	2
• Pressure transducer block	
- Can be calibrated by applying two pressures	Yes
- Monitoring of sensor limits	Yes
- Specification of a container characteristic with	Max. 30 nodes
- Square-rooted characteristic for flow measurement	Yes
- Gradual volume suppression and implementation point of square-root extraction	Parameterizable
- Simulation function for measured pressure value and sensor temperature	Constant value or over parameterizable ramp function

FOUNDATION Fieldbus communication	
Function blocks	3 function blocks analog input, 1 function block PID
• Analog input	
- Adaptation to customer-specific process variables	Yes, linearly rising or falling characteristic
- Electrical damping, adjustable	0 ... 100 s
- Simulation function	Output/input (can be locked within the device with a bridge)
- Failure mode	parameterizable (last good value, substitute value, incorrect value)
- Limit monitoring	Yes, one upper and lower warning limit and one alarm limit respectively
- Square-rooted characteristic for flow measurement	Yes
• PID	Standard FOUNDATION Fieldbus function block
• Physical block	1 resource block
Transducer blocks	1 transducer block Pressure with calibration, 1 transducer block LCD
• Pressure transducer block	
- Can be calibrated by applying two pressures	Yes
- Monitoring of sensor limits	Yes
- Simulation function: Measured pressure value, sensor temperature and electronics temperature	Constant value or over parameterizable ramp function

© Siemens 2020

Selection and Ordering data		Article No.
Pressure transmitter for gauge pressure, SITRANS P DS III with HART ↗		7MF4033- ■■■■■-■■■■
↗ Click on the Article No. for the online configuration in the PIA Life Cycle Portal.		
Measuring cell filling	**Measuring cell cleaning**	
Silicone oil	normal	1
Inert liquid [1]	grease-free to cleanliness level 2	3
FDA compliant fill fluid[2]		
• Neobee oil	normal	4
Measuring span (min. ... max.)		
8.3 ... 250 mbar	(0.12 ... 3.6 psi)	A
0.01 ... 1 bar	(0.15 ... 14.5 psi)	B
0.04 ... 4 bar	(0.58 ... 58 psi)	C
0.16 ... 16 bar	(2.32 ... 232 psi)	D
0.63 ... 63 bar	(9.14 ... 914 psi)	E
1.6 ... 160 bar	(23.2 ... 2320 psi)	F
4.0 ... 400 bar	(58.0 ... 5802 psi)	G
7.0 ... 700 bar	(102.0 ...10153 psi)	J
Wetted parts materials		
Seal diaphragm	Process connection	
Stainless steel	Stainless steel	A
Hastelloy	Stainless steel	B
Hastelloy	Hastelloy	C
Version for diaphragm seals in conjunction with process connector "female thread ½-14 NPT" **(recommended version)** [3) 4) 5) 6)]		Y1
Version for diaphragm seals in conjunction with process connector "G½B connection shank"" [3) 4) 5) 6)]		Y0
Process connection		
• Connection shank G½B to EN 837-1		0
• Female thread ½-14 NPT		1
• Stainless steel oval flange with process connection (Oval flange has no female thread)		
- Mounting thread $^{7}/_{16}$-20 UNF to IEC 61518/DIN EN 61518		2
- Mounting thread M10 to DIN 19213		3
- Mounting thread M12 to DIN 19213		4
• Male thread M20 x 1.5		5
• Male thread ½ -14 NPT		6
Non-wetted parts materials		
• Enclosure made of die-cast aluminium		0
• Enclosure stainless steel precision casting[7)]		3
Version		
• Standard version, German plate inscription, setting for pressure unit: bar		1
• International version, English plate inscription, setting for pressure unit: bar		2
• Chinese version, English plate inscription, setting for pressure unit: Pascal		3
All versions include DVD with compact operating instructions in various EU languages.		

Selection and Ordering data	Article No.
Pressure transmitter for gauge pressure, SITRANS P DS III with HART	7MF4033- ■■■■■-■■■■
Explosion protection	
• None	A
• With ATEX, Type of protection:	
- "Intrinsic safety (Ex ia)"	B
- "Explosion-proof (Ex d)"[8)]	D
- "Intrinsic safety and flameproof enclosure" (Ex ia + Ex d)"[9)]	P
- "Ex nA/ic (Zone 2)"[10)]	E
- "Intrinsic safety, explosion-proof enclosure and dust explosion protection (Ex ia + Ex d + Zone 1D/2D)"[9)11)]	R
• FM + CSA intrinsic safe (is)[12)]	F
• FM + CSA (is + ep) + Ex ia + Ex d (ATEX) + Zone 1D/2D[9)11)12)]	S
• With FM + CSA, Type of protection:	
- "Intrinsic Safe and Explosion Proof (is + xp)"[8)12)]	NC
Electrical connection / cable entry	
• Screwed gland M20 x1 .5	B
• Screwed gland ½-14 NPT	C
• Device plug Han 7D (plastic enclosure) incl. mating connector[13)]	D
• Device plugs M12 (stainless steel)[13)14)]	F
Display	
• Without display	0
• Without visible display (display concealed, setting: mA)	1
• With visible display (setting: mA)	6
• with customer-specific display (setting as specified, Order code "Y21" or "Y22" required)	7

Power supply units see Chap. 7 "Supplementary Components".

A quick-start guide is included in the scope of delivery of the device.

1) For oxygen application, add Order code E10.
2) Available for measuring ranges 1 ... 63 bar.
3) When also ordering the quality test certificate (factory calibration) according to IEC 60770-2 for transmitters with mounted diaphragm seals: Order this certificate only together with the remote seals. The measuring accuracy of the total combination is certified here.
4) If the inspection certificate 3.1.is ordered for the transmitter with mounted diaphragm seals this certificate must also be ordered with the respective remote seals.
5) The diaphragm seal is to be specified with a separate order number and must be included with the transmitter order number, for example 7MF403.-..Y..-.... and 7MF4900-1...-.B
6) The standard measuring cell filling of configurations with remote seals (Y) is silicone oil.
7) Not in conjunction with Electrical connection "Device plug Han 7D".
8) Without cable gland, with blanking plug
9) With enclosed cable gland Ex ia and blanking plug
10) Configurations with device plugs Han and M12 are only available in Ex ic.
11) Only in connection with IP66.
12) Explosion protection acc. to FM/CSA: suitable for installations according to NEC 500/505.
13) Only in connection with Ex approval A, B or E.
14) M12 delivered without cable socket

© Siemens 2020

Selection and Ordering data		Article No.
Pressure transmitter for gauge pressure		
SITRANS P DS III with PROFIBUS PA (PA) ↗		**7MF4034-**
SITRANS P DS III with FOUNDATION Fieldbus (FF) ↗		**7MF4035-**
↗ Click on the Article No. for the online configuration in the PIA Life Cycle Portal.		■■■■■-■■■■
Measuring cell filling	**Measuring cell cleaning**	
Silicone oil	normal	1
Inert liquid[1]	grease-free to cleanliness level 2	3
FDA compliant fill fluid[2]		
• Neobee oil	normal	4
Nominal measuring range		
250 mbar	(3.6 psi)	A
1 bar	(14.5 psi)	B
4 bar	(58 psi)	C
16 bar	(232 psi)	D
63 bar	(914 psi)	E
160 bar	(2320 psi)	F
400 bar	(5802 psi)	G
700 bar	(10153 psi)	J
Wetted parts materials		
Seal diaphragm	Process connection	
Stainless steel	Stainless steel	A
Hastelloy	Stainless steel	B
Hastelloy	Hastelloy	C
Version for diaphragm seals in conjunction with process connector "female thread ½-14 NPT" **(recommended version)** [3) 4) 5) 6)]		Y1
Version for diaphragm seals in conjunction with process connector "G½B connection shank"" [3) 4) 5) 6)]		Y0
Process connection		
• Connection shank G½B to EN 837-1		0
• Female thread ½-14 NPT		1
• Stainless steel oval flange with process connection (Oval flange has no female thread) [7)]		
- Mounting thread $^{7}/_{16}$-20 UNF to IEC 61518/DIN EN 61518		2
- Mounting thread M10 to DIN 19213		3
- Mounting thread M12 to DIN 19213		4
• Male thread M20 x 1.5		5
• Male thread ½ -14 NPT		6
Non-wetted parts materials		
• Enclosure made of die-cast aluminium		0
• Enclosure stainless steel precision casting		3
Version		
• Standard version, German label inscription, setting of pressure unit: bar		1
• International version, English label inscription, setting of pressure unit: psi		2
• Chinese version, English label inscription, setting of pressure unit: kPa		3
All versions include DVD with compact operating instructions in various EU languages.		

Selection and Ordering data	Article No.
Pressure transmitter for gauge pressure	
SITRANS P DS III with PROFIBUS PA (PA)	**7MF4034-**
SITRANS P DS III with FOUNDATION Fieldbus (FF)	**7MF4035-**
	■■■■■-■■■■
Explosion protection	
• None	A
• With ATEX, Type of protection:	
- "Intrinsic safety (Ex ia)"	B
- "Explosion-proof (Ex d)"[8)]	D
- "Intrinsic safety and flameproof enclosure" (Ex ia + Ex d)"[9)]	P
- "Ex nA/ic (Zone 2)"[10)]	E
- "Intrinsic safety, explosion-proof enclosure and dust explosion protection (Ex ia + Ex d + Zone 1D/2D)"[9) 11)]	R
• FM + CSA intrinsic safe (is)[12)]	F
• FM + CSA (is + ep) + Ex ia + Ex d (ATEX) + Zone 1D/2D[9)11)12)]	S
• With FM + CSA, Type of protection:	
- "Intrinsic Safe and Explosion Proof (is + xp)"[8)12)]	NC
Electrical connection/cable entry	
• Screwed gland M20 x 1.5	B
• Screwed gland ½-14 NPT	C
• Device plugs M12 (stainless steel)[13)14)]	F
Display	
• Without display	0
• Without visible display (display concealed, setting: bar)	1
• With visible display (setting: bar)	6
• with customer-specific display (setting as specified, Order code "Y21" required)	7

A quick-start guide is included in the scope of delivery of the device.

1) For oxygen application, add Order code E10.
2) Available for measuring ranges 1 ... 63 bar.
3) When also ordering the quality test certificate (factory calibration) according to IEC 60770-2 for transmitters with mounted diaphragm seals: Order this certificate only together with the remote seals. The measuring accuracy of the total combination is certified here.
4) If the inspection certificate 3.1.is ordered for the transmitter with mounted diaphragm seals this certificate must also be ordered with the respective remote seals.
5) The diaphragm seal is to be specified with a separate order number and must be included with the transmitter order number, for example 7MF403.-..Y..-.... and 7MF4900-1...-.B
6) The standard measuring cell filling of configurations with remote seals (Y) is silicone oil.
7) M10 fastening thread: Max. measuring span 160 bar (2320 psi) 7/16-20 UNF and M12 fastening thread: Max. measuring span 400 bar (5802 psi)
8) Without cable gland, with blanking plug.
9) With enclosed cable gland Ex ia and blanking plug.
10) Configurations with device plugs Han and M12 are only available in Ex ic.
11) Only in connection with IP66.
12) Explosion protection acc. to FM/CSA: suitable for installations according to NEC 500/505.
13) M12 delivered without cable socket.
14) Only in connection with Ex approval A, B, E or F.

© Siemens 2020

Selection and Ordering data	Order code	HART	PA	FF
Further designs Add "**-Z**" to Article No. and specify Order code.				
Pressure transmitter with mounting bracket (1x fixing angle, 2 x nut, 2 x U-washer or 1 x bracket, 2 x nut, 2 x U-washer) made of:				
• Steel	**A01**	✓	✓	✓
• Stainless steel 304	**A02**	✓	✓	✓
• Stainless steel 316L	**A03**	✓	✓	✓
Device plugs[1]				
• Han 7D (metal)	**A30**	✓		
• Han 8D (instead of Han 7D)	**A31**	✓		
• Angled	**A32**	✓		
• Han 8D (metal)	**A33**	✓		
Cable sockets for device plugs M12 (metal (CuZn))	**A50**	✓	✓	✓
Rating plate inscription (instead of German)				
• English	**B11**	✓	✓	✓
• French	**B12**	✓	✓	✓
• Spanish	**B13**	✓	✓	✓
• Italian	**B14**	✓	✓	✓
• Cyrillic (russian)	**B16**	✓	✓	✓
English rating plate Pressure units in in$H_2$0 and/or psi	**B21**	✓	✓	✓
Quality test certificate, 5-point factory calibration (IEC 60770-2)[2]	**C11**	✓	✓	✓
Inspection certificate[3] Acc. to EN 10204-3.1	**C12**	✓	✓	✓
Factory certificate Acc. to EN 10204-2.2	**C14**	✓	✓	✓
Inspection certificate (EN 10204-3.1) PMI test of parts in contact with medium	**C15**	✓	✓	✓
Functional safety (SIL2) Devices suitable for use according to IEC 61508 and IEC 61511. Includes SIL conformity declaration	**C20**	✓		
Functional safety (PROFIsafe) Certificate and PROFIsafe protocol	**C21**[4]		✓	
Functional safety (SIL2/3) Devices suitable for use according to IEC 61508 and IEC 61511. Includes SIL conformity declaration	**C23**	✓		
PED for Russia with initial calibration mark	**C99**	✓	✓	✓
Setting of the upper saturation limit of the output signal to 22.0 mA	**D05**	✓		
Manufacturer's declaration acc. to NACE (MR 0103-2012 and MR 0175-2009)	**D07**	✓	✓	✓
Degree of protection IP66/IP68 (only for M20x1.5 and ½-14 NPT)	**D12**	✓	✓	✓
Supplied with oval flange (1 item), PTFE packing and screws in thread of oval flange	**D37**	✓	✓	✓
Capri cable gland 4F CrNi and clamping device (848699 + 810634) included	**D59**	✓	✓	✓
Use in or on zone 1D/2D[5] (only together with type of protection "Intrinsic safety" (transmitter 7MF4...-.....-.B.. Ex ia)" and IP66)	**E01**	✓	✓	✓
Oxygen application (In the case of oxygen measurement and inert liquid max. 100 bar (1450 psi) at 60°C (140 °F))	**E10**	✓	✓	✓
Export approval Korea	**E11**	✓	✓	✓

Selection and Ordering data	Order code	HART	PA	FF
Further designs Add "**-Z**" to Article No. and specify Order code.				
CRN approval Canada (Canadian Registration Number)	**E22**[6]	✓	✓	✓
Dual seal	**E24**	✓	✓	✓
Explosion-proof "Intrinsic safety" (Ex ia) to INMETRO (Brazil) (only for transmitter 7MF4...-.....-.B..)	**E25**[7]	✓	✓	✓
"Flameproof" explosion protection according to INMETRO (Brazil) (only for transmitter 7MF4...-.....-.D..)	**E26**[7]	✓	✓	✓
Explosion-proof "Intrinsic safety" (Ex ia + Ex d) to INMETRO (Brazil) (only for transmitter 7MF4...-.....-.P..)	**E28**[7]	✓	✓	
Ex Approval IEC Ex (Ex ia) (only for transmitter 7MF4...-.....-.B..)	**E45**[7]	✓	✓	✓
Ex Approval IEC Ex (Ex d) (only for transmitter 7MF4...-.....-.D..)	**E46**[7]	✓	✓	✓
Explosion-proof "Intrinsic safety" to NEPSI (China) (only for transmitter 7MF4...-.....-.B..)	**E5**[7]	✓	✓	✓
Explosion protection "Explosion-proof" to NEPSI (China) (only for transmitter 7MF4...-.....-.D..)	**E56**[7]	✓	✓	✓
Ex protection "Zone 2" to NEPSI (China) (only for transmitter 7MF4...-.....-.E..)	**E57**[7]	✓	✓	✓
Ex protection „Ex ia", „Ex d" and „Zone 2" to NEPSI (China) (only for transmitter 7MF4...-.....-.R..)	**E58**[7]	✓	✓	✓
"Intrinsic safety" and "Explosion-proof" explosion protection acc. to Kosha (Korea) (only for transmitter 7MF4...-.....-.[B, D]..-Z + E11)	**E70**[7]	✓	✓	✓
Ex-protection Ex ia according to EAC Ex (Russia) (only for transmitter 7MF4...-.....-.B..)	**E80**	✓	✓	✓
Ex-protection Ex d according to EAC Ex (Russia) (only for transmitter 7MF4...-.....-.D..)	**E81**	✓	✓	✓
Ex-protection Ex nA/ic (Zone 2) according to EAC Ex (Russia) (only for transmitter 7MF4...-.....-.E..)	**E82**	✓	✓	✓
Ex-protection Ex ia + Ex d + Zone 1D/2D according to EAC Ex (Russia) (only for transmitter 7MF4...-.....-.R..)	**E83**	✓	✓	✓
Two coats of lacquer on enclosure and cover (PU on epoxy)	**G10**	✓	✓	✓
Transient protector 6 kV (lightning protection)	**J01**	✓	✓	✓
Process connection Astava	**J06**	✓	✓	✓

© Siemens 2020

Selection and Ordering data	Order code	HART	PA	FF
Further designs Add "**-Z**" to Article No. and specify Order code.				
Marine approvals				
• Det Norske Veritas Germanischer Lloyd (DNV-GL)	**S10**	✓	✓	✓
• Lloyds Register (LR)	**S11**	✓	✓	✓
• French marine classification society Bureau Veritas (BV)	**S12**	✓	✓	✓
• American Bureau of Shipping (ABS)	**S14**	✓	✓	✓
• Russian Maritime Register (RMR)	**S16**	✓	✓	✓
• Korean Register of Shipping (KR)	**S17**	✓	✓	✓

1) Device plug Han IP65

2) When also ordering the quality test certificate (factory calibration) according to IEC 60770-2 for transmitters with mounted diaphragm seals:
Order this certificate only together with the remote seals.
The measuring accuracy of the total combination is certified here.

3) If the inspection certificate 3.1.is ordered for the transmitter with mounted diaphragm seals this certificate must also be ordered with the respective remote seals.

4) Profisafe transmitters can only be operated with the S7 F Systems V6.1 configuration software in combination with S7-400H

5) Option does not contain gas explosion protection; only dust explosion protection: Use in or at Zone 1D/2D.

6) Cannot be ordered with remote seal.

7) When the additional ex option is selected, the ATEX marking on the device is omitted. Only the Ex option selected via the Z option is marked.

Selection and Ordering data	Order code	HART	PA	FF
Additional data Please add "**-Z**" to Article No. and specify Order code(s) and plain text.				
Measuring range to be set Specify in plain text (max. 5 characters): Y01: ... up to ... mbar, bar, kPa, MPa, psi	**Y01**	✓	✓[1]	
Stainless steel tag plate and entry in device variable (measuring point description) Max. 16 characters, specify in plain text: Y15:	**Y15**[2]	✓	✓	✓
Measuring point text (entry in device variable) Max. 27 characters, specify in plain text: Y16:	**Y16**	✓	✓	✓
Entry of HART address (TAG) Max. 8 characters, specify in plain text: Y17:	**Y17**	✓		
Setting of pressure indication in pressure units Specify in plain text (standard setting: bar): Y21: mbar, bar, kPa, MPa, psi, ... Note: The following pressure units can be selected: bar, mbar, mm H_2O*), inH_2O*), ftH_2O*), mmHG, inHG, psi, Pa, kPa, MPa, g/cm^2, kg/cm^2, Torr, ATM or % *) ref. temperature 20 °C	**Y21**	✓	✓	✓
Setting of pressure indication in non-pressure units[3] Specify in plain text: Y22: ..... up to ..... l/min, m^3/h, m, USgpm, ... (specification of measuring range in pressure units "Y01" is essential, unit with max. 5 characters)	**Y22 + Y01**	✓		
Preset bus address possible between 1 and 126 Specify in plain text: Y25:	**Y25**		✓	✓
Damping adjustment in seconds (0 ... 100 s)	**Y30**	✓	✓	✓

Factory mounting of valve manifolds, see accessories.

Only Y01, Y15, Y16, Y17, Y21, Y22, Y25 and D05 can be factory preset

✓ = available

Ordering example

Item line:	7MF4033-1EA00-1AA7-Z
B line:	A01 + Y01 + Y21
C line:	Y01: 10 ... 20 bar (145 ... 290 psi)
C line:	Y21: bar (psi)

1) Measuring accuracies for PROFIBUS PA transmitters with Option Y01 are calculated in the same way as for HART devices.

2) If you do not wish to have any text engraved for Y15, then do not make any further text entries as "Y15:".

3) Preset values can only be changed over SIMATIC PDM.

© Siemens 2020

Dimensional drawings

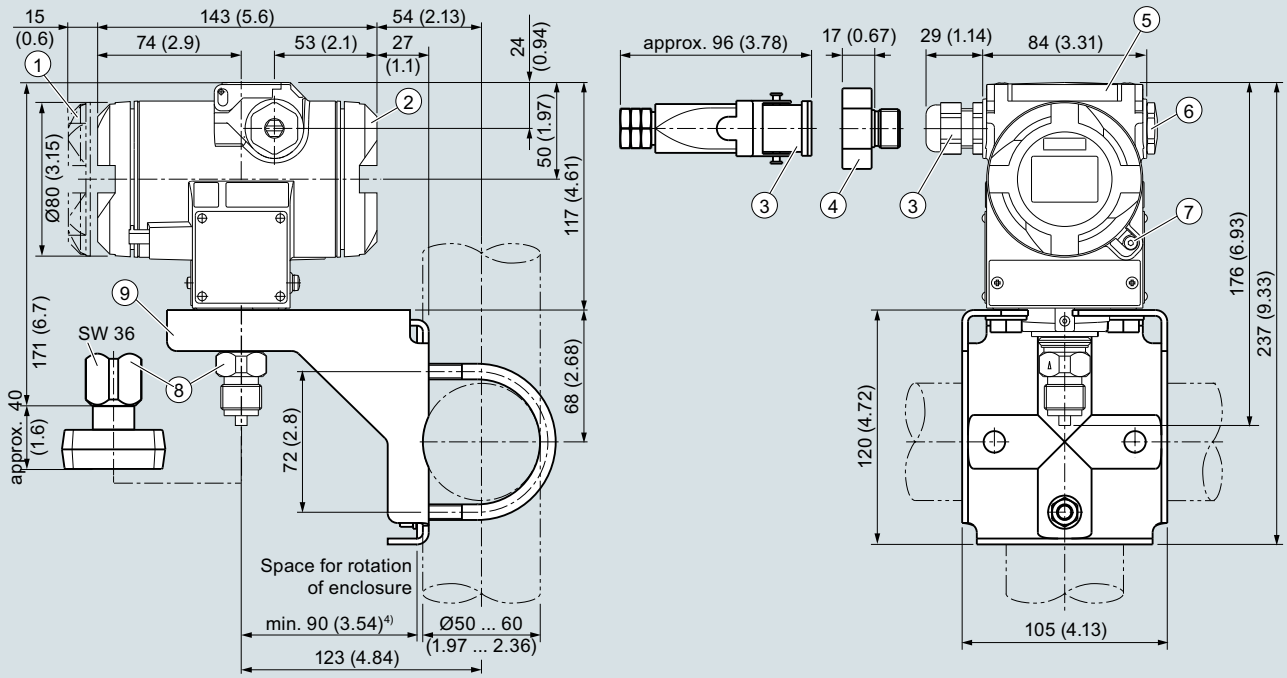

1. Electronic side, digital display (longer overall length for cover with window)[1]
2. Terminal side[1]
3. Electrical connection: Screwed gland M20 x 1,5 or Screwed gland ½-14 NPT or Han 7D/8D device plug[2] [3]
4. Harting adapter
5. Protective cover over keys
6. Blanking plug
7. Screw cover - safety bracket (only for type of protection "Explosion-proof enclosure", not shown in the drawing)
8. Process connection: Connection shank G½B or Oval flange
9. Mounting bracket (option)

1) Allow approx. 20 mm (0.79 inch) thread length to permit unscrewing
2) Not with type of protection "Explosion-proof enclosure"
3) Not with type of protection "FM + CSA" [IS + XP]"
4) Minimum distance for rotating

SITRANS P DS III pressure transmitters for gauge pressure, dimensions in mm (inch)

© Siemens 2020

Technical specifications

SITRANS P DS III series for gauge and absolute pressure, with front-flush diaphragm

Input of gauge pressure, with front-flush diaphragm				
Measured variable	Gauge pressure, front-flush			
Measuring span (continuously adjustable) or nominal measuring range, max. operating pressure and max. test pressure	**HART**	**PROFIBUS PA/ FOUNDATION Fieldbus**		
	Measuring span	Nominal measuring range	Max. operating pressure MAWP (PS)	Max. perm. test pressure
	0.01 ... 1 bar 1 ... 100 kPa 0.15 ... 14.5 psi	1 bar 100 kPa 14.5 psi	4 bar 400 kPa 58 psi	6 bar 600 kPa 87 psi)
	0.04 ... 4 bar 4 ... 400 kPa 0.58 ... 58 psi	4 bar 400 kPa 58 psi	7 bar 0.7 MPa 102 psi	10 bar 1 MPa 145 psi
	0.16 ... 16 bar 16 ... 1600 kPa 2.3 ... 232 psi	16 bar 1600 kPa 232 psi	21 bar 2.1 MPa 305 psi	32 bar 3.2 MPa 464 psi
	0.63 ... 63 bar 63 ... 6300 kPa 9.1 ... 914 psi	63 bar 6300 kPa 914 psi	67 bar 6.7MPa 972 psi	100 bar 10 MPa 1450 psi
Lower measuring limit				
• Measuring cell with silicone oil filling	100 mbar a/10 kPa a/1.45 psi a			
• Measuring cell with inert filling liquid	100 mbar a/10 kPa a/1.45 psi a			
• Measuring cell with Neobee	100 mbar a/10 kPa a/1.45 psi a			
Upper measuring limit	100 % of max. measuring span			
Input of absolute pressure, with front-flush diaphragm				
Measured variable	Absolute pressure, front-flush			
Measuring span (continuously adjustable) or nominal measuring range, max. operating pressure and max. test pressure	**HART**	**PROFIBUS PA/ FOUNDATION Fieldbus**		
	Measuring span	Nominal measuring range	Max. operating pressure MAWP (PS)	Max. perm. test pressure
	43.34 ... 1300 mbar a 4.33 ... 130 kPa a 17 ... 525 inH_2O a	1300 mbar a 130 kPa a 525 inH_2O a	2.6 bar a 260 kPa a 37.7 psi a	10 bar a 1 MPa a 145 psi a
	160 ... 5000 mbar a 16 ... 500 kPa a 2.32 ... 72.5 psi a	5000 mbar a 500 kPa a 72.5 psi a	10 bar a 1 MPa a 145 psi a	30 bar a 3 MPa a 435 psi a
	1 ... 30 bar a 0.1 ... 3 MPa a 14.6 ... 435 psi a	30 bar a 3 MPa a 435 psi a	45 bar a 4.5 MPa a 653 psi a	100 bar a 10 MPa a 1450 psi a
	Depending on the process connection, the measuring span may differ from these values			
Lower measuring limit	0 mbar a/0 kPa a/0 psi a			
Upper measuring limit	100 % of max. measuring span			

Output	**HART**	**PROFIBUS PA/FOUNDATION Fieldbus**
Output signal	4 ... 20 mA	Digital PROFIBUS PA and FOUNDATION Fieldbus signal
• Lower limit (infinitely adjustable)	3.55 mA, factory preset to 3.84 mA	-
• Upper limit (infinitely adjustable)	23 mA, factory preset to 20.5 mA or optionally set to 22.0 mA	-
Load		
• Without HART	$R_B \leq (U_H - 10.5\ V)/0.023\ A$ in Ω, U_H: Power supply in V	-
• With HART	R_B = 230 ... 500 Ω (SIMATIC PDM) or R_B = 230 ... 1100 Ω (HART Communicator)	-
Physical bus	-	IEC 61158-2
Protection against polarity reversal	Protected against short-circuit and polarity reversal. Each connection against the other with max. supply voltage.	
Electrical damping (step width 0.1 s)	Set to 2 s (0 ... 100 s)	

© Siemens 2020

SITRANS P DS III series for gauge and absolute pressure, with front-flush diaphragm		
Measuring accuracy	Acc. to IEC 60770-1	
Reference conditions (All error data refer always refer to the set span)	• Increasing characteristic • Lower range value 0 bar/kPa/psi • Stainless steel seal diaphragm • Silicone oil filling • Room temperature 25 °C (77 °F)	
Measuring span ratio r (spread, Turn-Down)	r = max. measuring span/set measuring span or nominal measuring range	
Error in measurement at limit setting incl. hysteresis and reproducibility		
• Linear characteristic	**Gauge pressure, front-flush**	**Absolute pressure, front-flush**
- r ≤ 5	≤ 0.075 %	-
- 5 < r ≤ 100	≤ (0.005 · r + 0.05) %	-
- r ≤ 10	-	≤ 0.2 %
- 10 < r ≤ 30	-	≤ 0.4 %
Influence of ambient temperature (in percent per 28 °C (50 °F))	≤ (0.08 · r + 0.16) %	≤ (0.16 · r + 0.24) %
Effect of ambient temperature (in pressure per temperature change)		
• Temperature difference between medium temperature and ambient temperature	3 mbar/0.3 kPa/0.04 psi per 10 K	
Long-term stability (temperature change ± 30 °C (± 54 °F))	≤ (0.25 · r) % in 5 years	
Effect of mounting position (in pressure per change in angle)	0.4 mbar/0.04 kPa/0.006 per 10° inclination (zero point correction is possible with position error compensation)	
Effect of auxiliary power supply (in percent per change in voltage)	0.005 % per 1 V	
Measuring value resolution for PROFIBUS PA and FOUNDATION Fieldbus	$3 \cdot 10^{-5}$ of nominal measuring range	
Operating conditions		
Installation conditions		
Ambient temperature	Observe the temperature class in areas subject to explosion hazard.	
• Measuring cell with silicone oil	-40 ... +85 °C (-40 ... +185 °F)	
• Measuring cell with Neobee oil (with front-flush diaphragm)	-10 ... +85 °C (14 ... +185 °F)	
• Measuring cell with inert liquid	-40 ... +85 °C (-40 ... +185 °F)	
• Transmitter	-40 ... +85 °C (-40 ... +185 °F)	
• Display readable	-30 ... +85 °C (-22 ... +185 °F)	
• Storage temperature	-50 ... +85 °C (-58 ... +185 °F) (in the case of Neobee: -20 ... +85 °C (-4 ... +185/°F)) (for high temperature oil: -10 ... + 85 °C (14 ... 185 °F))	
Climatic class		
• Condensation	Relative humidity 0 ... 100 % Condensation permissible, suitable for use in the tropics	
Degree of protection		
• according to EN 60529	IP66 (optional IP66/IP68)	
• according to NEMA 250	Type 4X	
Electromagnetic Compatibility		
• Emitted interference and interference immunity	Acc. to IEC 61326 and NAMUR NE 21	
Medium conditions	The max. medium temperature of the front-flush process connections is to be taken into account in accordance with the relevant connection standards (e. g. DIN 32676, DIN 11851 etc.).	
Temperature of medium		
• Measuring cell with silicone oil	-40 ... +100 °C (-40 ... +212 °F)	
• Measuring cell with silicone oil (with front-flush diaphragm)	-40 ... +150 °C (-40 ... +302 °F)	
• Measuring cell with Neobee oil (with front-flush diaphragm)	-10 ... +150 °C (14 ... 302 °F)	
• Measuring cell with silicone oil, with temperature decoupler (only for gauge pressure version with front-flush diaphragm)	-40 ... +200 °C (-40 ... +392 °F)	
• Measuring cell with Neobee oil, with temp. decoupler (only for gauge pressure version with flush-mounted diaphragm)	-10 ... +200 °C (14 ... 392 °F)	
• Measuring cell with inert filling liquid	-20 ... +100 °C (-4 ... +212 °F)	
• Measuring cell with high-temperature oil (only for gauge pressure version with front-flush diaphragm)	-10 ... +250 °C (14 ... 482 °F)	

© Siemens 2020

SITRANS P DS III series for gauge and absolute pressure, with front-flush diaphragm		
Design		
Weight (without options)	≈ 1.5 kg (≈ 3.3 lb)	
Enclosure material	Low-copper die-cast aluminum, GD-AlSi12 or stainless steel precision casting, mat. no. 1.4408	
Wetted parts materials	Stainless steel, mat. no. 1.4404/316L or Hastelloy C276, mat. no. 2.4819	
Measuring cell filling	Silicone oil or inert filling liquid	
Process connection	• Flanges as per EN and ASME • F&B and pharmaceutical flanges	
Surface quality touched-by-media	R_a-values ≤ 0.8 µm (32 µ-inch)/welds $R_{a)}$ ≤ 1.6 µm (64 µ-inch) (Process connections acc. to 3A; R_a-values ≤ 0.8 µm (32 µ-inch)/welds R_a) ≤ 0.8 µm (32 µ-inch)	
Power supply U_H	**HART**	**PROFIBUS PA/FOUNDATION Fieldbus**
Terminal voltage on transmitter	10.5 ... 45 V DC 10.5 ... 30 V DC in intrinsically-safe mode	-
Power supply	-	Supplied through bus
Separate supply voltage	-	No
Bus voltage		
• Not Ex	-	9 ... 32 V
• With intrinsically-safe operation	-	9 ... 24 V
Current consumption		
• Basic current (max.)	-	12.5 mA
• Start-up current ≤ basic current	-	Yes
• Max. current in event of fault	-	15.5 mA
Fault disconnection electronics (FDE) available	-	Yes

© Siemens 2020

SITRANS P DS III series for gauge and absolute pressure, with front-flush diaphragm		
Certificates and approvals		
Classification according to PED 2014/68/EU	For gases of fluid group 1 and liquids of fluid group 1; complies with requirements of article 4, paragraph 3 (sound engineering practice)	
Explosion protection		
• Intrinsic safety "i"	PTB 13 ATEX 2007 X	
- Marking	Ex II 1/2 G Ex ia/ib IIC T4/T5/T6 Ga/Gb	
- Permissible ambient temperature	-40 ... +85 °C (-40 ... +185 °F) temperature class T4; -40 ... +70 °C (-40 ... +158 °F) temperature class T5; -40 ... +60 °C (-40 ... +140 °F) temperature class T6	
- Connection	To certified intrinsically-safe circuits with peak values: U_i = 30 V, I_i = 100 mA, P_i = 750 mW; R_i = 300 Ω	FISCO supply unit: U_o = 17.5 V, I_o = 380 mA, P_o = 5.32 W Linear barrier: U_o = 24 V, I_o = 250 mA, P_o = 1.2 W
- Effective internal inductance/capacitance	L_i = 0.4 mH, C_i = 6 nF	L_i = 7 µH, C_i = 1.1 nF
• Explosion-proof "d"	PTB 99 ATEX 1160	
- Marking	Ex II 1/2 G Ex d IIC T4/T6 Gb	
- Permissible ambient temperature	-40 ... +85 °C (-40 ... +185 °F) temperature class T4; -40 ... +60 °C (-40 ... +140 °F) temperature class T6	
- Connection	To circuits with values: U_H = 10.5 ... 45 V DC	To circuits with values: U_H = 9 ... 32 V DC
• Dust explosion protection for zone 20	PTB 01 ATEX 2055	
- Marking	Ex II 1 D Ex ta IIIC T120°C Da Ex II 1/2 D Ex ta/tb IIIC T120°C Da/Db	
- Permissible ambient temperature	-40 ... +85 °C (-40 ... +185 °F)	
- Max. surface temperature	120 °C (248 °F)	
- Connection	To certified intrinsically-safe circuits with peak values: U_i = 30 V, I_i = 100 mA, P_i = 750 mW, R_i = 300 Ω	FISCO supply unit: U_o = 17.5 V, I_o = 380 mA, P_o = 5.32 W Linear barrier: U_o = 24 V, I_o = 250 mA, P_o = 1 W
- Effective internal inductance/capacitance	L_i = 0.4 mH, C_i = 6 nF	L_i = 7 µH, C_i = 1.1 nF
• Dust explosion protection for zone 21/22	Ex II 2 D Ex tb IIIC T120°C Db	
- Marking	Ex II 2 D IP65 T 120 °C	
- Connection	To circuits with values: U_H = 10.5 ... 45 V DC; P_{max} = 1.2 W	To circuits with values: U_H = 9 ... 32 V DC; P_{max} = 1 W
• Type of protection "n" (zone 2)	PTB 13 ATEX 2007 X	
- Marking	Ex II 2/3 G Ex nA IIC T4/T5/T6 Gb/Gc Ex II 2/3 G Ex ic IIC T4/T5/T6 Gb/Gc	
- Connection (Ex nA)	U_m = 45 V	U_m = 32 V
- Connections (Ex ic)	To circuits with values: U_i = 45 V	FISCO supply unit ic: U_o = 17.5 V, I_o = 570 mA Linear barrier: U_o = 32 V, I_o = 132 mA, P_o = 1 W
- Effective internal inductance/capacitance	L_i = 0.4 mH, C_i = 6 nF	L_i = 7 µH, C_i = 1.1 nF
• Explosion protection acc. to FM	Certificate of Compliance 3008490	
- Identification (XP/DIP) or (IS); (NI)	CL I, DIV 1, GP ABCD T4...T6; CL II, DIV 1, GP EFG; CL III; CL I, ZN 0/1 AEx ia IIC T4...T6; CL I, DIV 2, GP ABCD T4...T6; CL II, DIV 2, GP FG; CL III	
• Explosion protection to CSA	Certificate of Compliance 1153651	
- Identification (XP/DIP) or (IS)	CL I, DIV 1, GP ABCD T4...T6; CL II, DIV 1, GP EFG; CL III; Ex ia IIC T4...T6; CL I, DIV 2, GP ABCD T4...T6; CL II, DIV 2, GP FG; CL III	

Hygiene version

In the case of SITRANS P DSIII with 7MF413x front-flush diaphragm, selected connections comply with the requirements of EHEDG.

© Siemens 2020

HART communication	
HART	230 ... 1100 Ω
Protocol	HART Version 5.x
Software for computer	SIMATIC PDM
PROFIBUS PA communication	
Simultaneous communication with master class 2 (max.)	4
The address can be set using	Configuration tool or local operation (standard setting address 126)
Cyclic data usage	
• Output byte	5 (one measured value) or 10 (two measured values)
• Input byte	0, 1, or 2 (register operating mode and reset function for metering)
Internal preprocessing	
Device profile	PROFIBUS PA Profile for Process Control Devices Version 3.0, class B
Function blocks	2
• Analog input	
- Adaptation to customer-specific process variables	Yes, linearly rising or falling characteristic
- Electrical damping, adjustable	0 ... 100 s
- Simulation function	Input /Output
- Failure mode	parameterizable (last good value, substitute value, incorrect value)
- Limit monitoring	Yes, one upper and lower warning limit and one alarm limit respectively
• Register (totalizer)	Can be reset, preset, optional direction of counting, simulation function of register output
- Failure mode	parameterizable (summation with last good value, continuous summation, summation with incorrect value)
- Limit monitoring	One upper and lower warning limit and one alarm limit respectively
• Physical block	1
Transducer blocks	2
• Pressure transducer block	
- Can be calibrated by applying two pressures	Yes
- Monitoring of sensor limits	Yes
- Specification of a container characteristic with	Max. 30 nodes
- Square-rooted characteristic for flow measurement	Yes
- Gradual volume suppression and implementation point of square-root extraction	Parameterizable
- Simulation function for measured pressure value and sensor temperature	Constant value or over parameterizable ramp function

FOUNDATION Fieldbus communication	
Function blocks	3 function blocks analog input, 1 function block PID
• Analog input	
- Adaptation to customer-specific process variables	Yes, linearly rising or falling characteristic
- Electrical damping, adjustable	0 ... 100 s
- Simulation function	Output/input (can be locked within the device with a bridge)
- Failure mode	parameterizable (last good value, substitute value, incorrect value)
- Limit monitoring	Yes, one upper and lower warning limit and one alarm limit respectively
- Square-rooted characteristic for flow measurement	Yes
• PID	Standard FOUNDATION Fieldbus function block
• Physical block	1 resource block
Transducer blocks	1 transducer block Pressure with calibration, 1 transducer block LCD
• Pressure transducer block	
- Can be calibrated by applying two pressures	Yes
- Monitoring of sensor limits	Yes
- Simulation function: Measured pressure value, sensor temperature and electronics temperature	Constant value or over parameterizable ramp function

© Siemens 2020

Selection and Ordering data		Article No.
Pressure transmitter for gauge and absolute pressure, front-flush diaphragm, SITRANS P DS III HART ↗		7 M F 4 1 3 3 - ■■■■■ - ■■■■
↗ Click on the Article No. for the online configuration in the PIA Life Cycle Portal.		
Measuring cell filling	**Measuring cell cleaning**	
Silicone oil	normal	1
Inert liquid		3
FDA compliant fill fluid		
• Neobee oil	normal	4
Measuring span (min. ... max.)		
0.01 ... 1 bar	(0.15 ... 14.5 psi)	B
0.04 ... 4 bar	(0.58 ... 58 psi)	C
0.16 ... 16 bar	(2.32 ... 232 psi)	D
0.63 ... 63 bar	(9.14 ... 914 psi)	E
43.34 ... 1300 mbar a[1]	(0.63 ... 18.86 psi a)[1]	S
0.17 ... 5 bar a[1]	(2.43 ... 72.5 psi a)[1]	T
1 ... 30 bar a[1]	(4.35 ... 435 psi a)[1]	U
Wetted parts materials		
Seal diaphragm	Connection shank	
Stainless steel	Stainless steel	A
Hastelloy[2]	Stainless steel	B
Process connection		
• Flange version with Order code M.., N.., R.. or Q..		7
Non-wetted parts materials		
• Enclosure made of die-cast aluminium		0
• Enclosure stainless steel precision casting		3
Version		
• Standard version, German plate inscription, setting for pressure unit: bar		1
• International version, English plate inscription, setting for pressure unit: bar		2
• Chinese version, English plate inscription, setting for pressure unit: Pascal		3
All versions include DVD with compact operating instructions in various EU languages.		
Explosion protection		
• None		A
• With ATEX, Type of protection:		
- "Intrinsic safety (Ex ia)"		B
- "Explosion-proof (Ex d)" [3]		D
- „Ex nA/ic (Zone 2)"[4]		E
• FM + CSA intrinsic safe (is)[5]		F
• FM + CSA (is + ep) + Ex ia + Ex d (ATEX) + Zone 1D/2D[5][6][7]		S
• With FM + CSA, Type of protection:		
- "Intrinsic Safe and Explosion Proof (is + xp)"[3][5]		N C
Electrical connection/cable entry		
• Inner thread M20 x 1.5		B
• Female thread ½-14 NPT		C
• Device plug Han 7D (plastic enclosure) incl. mating connector[8]		D
• Device plugs M12 (stainless steel)[9] [10]		F

Selection and Ordering data	Article No.
Pressure transmitter for gauge and absolute pressure, front-flush diaphragm, SITRANS P DS III HART	7 M F 4 1 3 3 - ■■■■■ - ■■■■
Display	
• Without display	0
• Without visible display (display concealed, setting: mA)	1
• With visible display (setting: mA)	6
• With customer-specific display (setting as specified, Order code "Y21" or "Y22" required)	7

Power supply units see Chap. 7 "Supplementary Components".

A quick-start guide is included in the scope of delivery of the device.

1) Not with temperature decoupler P00, not for process connections R02, R04, R10 and R11, and can only be ordered in conjunction with silicone oil.
2) Only available for flanges with options M.., N.. and Q..
3) Without cable gland, with blanking plug
4) Configurations with device plugs Han and M12 are only available in Ex ic.
5) Explosion protection acc. to FM/CSA: suitable for installations according to NEC 500/505.
6) Only in connection with IP66.
7) With enclosed cable gland Ex ia and blanking plug.
8) Only in connection with Ex approval A, B or E.
9) Only in connection with Ex approval A, B, E or F.
10) M12 delivered without cable socket

© Siemens 2020

Selection and Ordering data		Article No.
Pressure transmitter P for gauge and absolute pressure, front-flush diaphragm:		
SITRANS P DS III with PROFIBUS PA (PA) ↗		**7 M F 4 1 3 4 -**
SITRANS P DS III with FOUNDATION Fieldbus (FF) ↗		**7 M F 4 1 3 5 -**
↗ Click on the Article No. for the online configuration in the PIA Life Cycle Portal.		■■■■■ - ■■■■
Measuring cell filling	**Measuring cell cleaning**	
Silicone oil	normal	**1**
Inert liquid		**3**
FDA compliant fill fluid		
• Neobee oil	normal	**4**
Nominal measuring range		
1 bar	(14.5 psi)	**B**
4 bar	(58 psi)	**C**
16 bar	(232 psi)	**D**
63 bar	(914 psi)	**E**
1300 mbar a[1]	(18.86 psi a)[1]	**S**
5 bar a[1]	(72.5 psi a)[1]	**T**
30 bar a[1]	(435 psi a)[1]	**U**
Wetted parts materials		
Seal diaphragm	Connection shank	
Stainless steel	Stainless steel	**A**
Hastelloy[2]	Stainless steel	**B**
Process connection		
• Flange version with Order code M.., N.., R.. or Q..		**7**
Non-wetted parts materials		
• Enclosure made of die-cast aluminium		**0**
• Enclosure stainless steel precision casting		**3**
Version		
• Standard version, German plate inscription, setting for pressure unit: bar		**1**
• International version, English plate inscription, setting for pressure unit: bar		**2**
• Chinese version, English plate inscription, setting for pressure unit: Pascal		**3**
All versions include DVD with compact operating instructions in various EU languages.		
Explosion protection		
• None		**A**
• With ATEX, Type of protection:		
- "Intrinsic safety (Ex ia)"		**B**
- "Explosion-proof (Ex d)"[3]		**D**
- „Ex nA/ic (Zone 2)"[4]		**E**
• FM + CSA intrinsic safe (is)[5]		**F**
• FM + CSA (is + ep) + Ex ia + Ex d (ATEX) + Zone 1D/2D[5][6][7]		**S**
• With FM + CSA, Type of protection:		
- "Intrinsic Safe and Explosion Proof (is + xp)"[3][5] (available soon)		**N C**
Electrical connection/cable entry		
• Screwed gland M20 x 1.5		**B**
• Screwed gland ½-14 NPT		**C**
• Device plugs M12 (stainless steel)[8] [9]		**F**

Selection and Ordering data	Article No.
Pressure transmitter P for gauge and absolute pressure, front-flush diaphragm:	
SITRANS P DS III with PROFIBUS PA (PA)	**7 M F 4 1 3 4 -**
SITRANS P DS III with FOUNDATION Fieldbus (FF)	**7 M F 4 1 3 5 -**
	■■■■■ - ■■■■
Display	
• Without display	**0**
• Without visible display (display concealed, setting: bar)	**1**
• With visible display (setting: bar)	**6**
• With customer-specific display (setting as specified, Order code "Y21" required)	**7**

A quick-start guide is included in the scope of delivery of the device.

1) Not with temperature decoupler P00, not for process connections R01, R02, R04, R10 and R11, and can only be ordered in conjunction with silicone oil.
2) Only available for flanges with options M.., N.. and Q.
3) Without cable gland, with blanking plug
4) Configurations with device plugs Han and M12 are only available in Ex ic.
5) Explosion protection acc. to FM/CSA: suitable for installations according to NEC 500/505.
6) Only in connection with IP66.
7) With enclosed cable gland Ex ia and blanking plug.
8) Only in connection with Ex approval A, B, E or F.
9) M12 delivered without cable socket

© Siemens 2020

for gauge/absolute pressure, with front-flush diaphragm

Selection and Ordering data	Order code	HART	PA	FF
Further designs Add "**-Z**" to Article No. and specify Order code.				
Device plugs[1]				
• Han 7D (metal)	**A30**	✓		
• Han 8D (instead of Han 7D)	**A31**	✓		
• Angled	**A32**	✓		
• Han 8D (metal)	**A33**	✓		
Cable sockets for device plugs M12 (metal (CuZn))	**A50**	✓	✓	✓
Rating plate inscription (instead of German)				
• English	**B11**	✓	✓	✓
• French	**B12**	✓	✓	✓
• Spanish	**B13**	✓	✓	✓
• Italian	**B14**	✓	✓	✓
• Cyrillic (russian)	**B16**	✓	✓	✓
English rating plate Pressure units in in$H_2$0 and/or psi	**B21**	✓	✓	✓
Quality test certificate, 5-point factory calibration (IEC 60770-2)	**C11**	✓	✓	✓
Inspection certificate Acc. to EN 10204-3.1	**C12**	✓	✓	✓
Factory certificate Acc. to EN 10204-2.2	**C14**	✓	✓	✓
Functional safety (SIL2) Devices suitable for use according to IEC 61508 and IEC 61511. Includes SIL conformity declaration	**C20**	✓		
Functional safety (PROFIsafe) Certificate and PROFIsafe protocol	**C21**[2]		✓	
Functional safety (SIL2/3) Devices suitable for use according to IEC 61508 and IEC 61511. Includes SIL conformity declaration	**C23**	✓		
PED for Russia with initial calibration mark	**C99**	✓	✓	✓
Setting of the upper saturation limit of the output signal to 22.0 mA	**D05**	✓		
Degree of protection IP66/IP68 (only for M20x1.5 and ½-14 NPT)	**D12**	✓	✓	✓
Capri cable gland 4F CrNi and clamping device (848699 + 810634) included	**D59**	✓	✓	✓
Oxygen application (In the case of oxygen measurement and inert liquid max. 100 bar (1450 psi) at 60°C (140 °F))	**E10**	✓	✓	✓
Export approval Korea	**E11**	✓	✓	✓
CRN approval Canada (Canadian Registration Number)	**E22**[3]	✓	✓	✓
Dual seal	**E24**	✓	✓	✓
Explosion-proof "Intrinsic safety" (Ex ia) to INMETRO (Brazil) (only for transmitter 7MF4...-.....-.B..)	**E25**[4]	✓	✓	✓
"Flameproof" explosion protection according to INMETRO (Brazil) (only for transmitter 7MF4...-.....-.D..)	**E26**[4]	✓	✓	✓
Explosion-proof "Intrinsic safety" (Ex ia + Ex d) to INMETRO (Brazil) (only for transmitter 7MF4...-.....-.P..)	**E28**[4]	✓	✓	
Ex Approval IEC Ex (Ex ia) (only for transmitter 7MF4...-.....-.B..)	**E45**[4]	✓	✓	✓
Ex Approval IEC Ex (Ex d) (only for transmitter 7MF4...-.....-.D..)	**E46**[4]	✓	✓	✓

Selection and Ordering data	Order code	HART	PA	FF
Further designs Add "**-Z**" to Article No. and specify Order code.				
Explosion-proof "Intrinsic safety" to NEPSI (China) (only for transmitter 7MF4...-.....-.B..)	**E55**[4]	✓	✓	✓
Explosion protection "Explosion-proof" to NEPSI (China) (only for transmitter 7MF4...-.....-.D..)	**E56**[4]	✓	✓	✓
Ex protection "Zone 2" to NEPSI (China) (only for transmitter 7MF4...-.....-.E..)	**E57**[4]	✓	✓	✓
Ex protection „Ex ia", „Ex d" and „Zone 2" to NEPSI (China) (only for transmitter 7MF4...-.....-.R..)	**E58**[4]	✓	✓	✓
"Intrinsic safety" and "Explosion-proof" explosion protection acc. to Kosha (Korea) (only for transmitter 7MF4...-.....-.[B, D]..-Z + E11)	**E70**[4]	✓	✓	✓
Ex-protection Ex ia according to EAC Ex (Russia)	**E80**	✓	✓	✓
Ex-protection Ex d according to EAC Ex (Russia)	**E81**	✓	✓	✓
Ex-protection Ex nA/ic (Zone 2) according to EAC Ex (Russia)	**E82**	✓	✓	✓
Ex-protection Ex ia + Ex d + Zone 1D/2D according to EAC Ex (Russia)	**E83**	✓	✓	✓
Two coats of lacquer on enclosure and cover (PU on epoxy)	**G10**	✓	✓	✓
Transient protector 6 kV (lightning protection)	**J01**	✓	✓	✓
Flanges to EN 1092-1, Form B1				
• DN 25, PN 40[5]	**M11**	✓	✓	✓
• DN 40, PN 40	**M13**	✓	✓	✓
• DN 40, PN 100	**M23**	✓	✓	✓
• DN 50, PN 16	**M04**	✓	✓	✓
• DN 50, PN 40	**M14**	✓	✓	✓
• DN 80, PN 16	**M06**	✓	✓	✓
• DN 80, PN 40	**M16**	✓	✓	✓
Flanges to ASME B16.5				
• Stainless steel flange 1" class 150[5]	**M40**	✓	✓	✓
• Stainless steel flange 1½" class 150	**M41**	✓	✓	✓
• Stainless steel flange 2" class 150	**M42**	✓	✓	✓
• Stainless steel flange 3" class 150	**M43**	✓	✓	✓
• Stainless steel flange 4" class 150	**M44**	✓	✓	✓
• Stainless steel flange 1½" class 300	**M46**	✓	✓	✓
• Stainless steel flange 2" class 300	**M47**	✓	✓	✓
• Stainless steel flange 3" class 300	**M48**	✓	✓	✓
• Stainless steel flange 4" class 300	**M49**	✓	✓	✓
Threaded connector to DIN 3852-2, form A, thread to ISO 228				
• G ¾"-A, front-flush[6]	**R01**	✓	✓	✓
• G 1"-A, front-flush[6]	**R02**	✓	✓	✓
• G 2"-A, front-flush	**R04**	✓	✓	✓
Tank connection[7] Sealing is included in delivery				
• TG 52/50, PN 40	**R10**	✓	✓	✓
• TG 52/150, PN 40	**R11**	✓	✓	✓

© Siemens 2020

Selection and Ordering data	Order code	HART	PA	FF
Further designs Add "**-Z**" to Article No. and specify Order code.				
Sanitary process connection according DIN 11851 (Dairy connection with slotted union nut)				
• DN 50, PN 25	**N04**	✓	✓	✓
• DN 80, PN 25	**N06**	✓	✓	✓
Tri-Clamp connection according DIN 32676/ISO 2852				
• DN 50/2", PN 16	**N14**	✓	✓	✓
• DN 65/2.5", PN 10	**N15**	✓	✓	✓
• Clamp 2" ISO 2852 PN 16	**N22**	✓	✓	✓
• Clamp 3" ISO 2852 PN 16	**N23**	✓	✓	✓
Varivent connection EHEDG compliant				
• Type N = 68 for Varivent enclosure DN 40 ... 125 and 1½" ... 6", PN 40	**N28**	✓	✓	✓
Temperature decoupler up to 200 °C[8)] for version with front-flush diaphragm	**P00**	✓	✓	✓
Sanitary process connection to DRD				
• DN 50, PN 40	**M32**	✓	✓	✓
SMS socket with union nut				
• 2"	**M67**	✓	✓	✓
• 2½"	**M68**	✓	✓	✓
• 3"	**M69**	✓	✓	✓
SMS threaded socket				
• 2"	**M73**	✓	✓	✓
• 2½"	**M74**	✓	✓	✓
• 3"	**M75**	✓	✓	✓
IDF socket with union nut ISO 2853				
• 2"	**M82**	✓	✓	✓
• 2½"	**M83**	✓	✓	✓
• 3"	**M84**	✓	✓	✓
IDF threaded socket ISO 2853				
• 2"	**M92**	✓	✓	✓
• 2½"	**M93**	✓	✓	✓
• 3"	**M94**	✓	✓	✓
Sanitary process connection to NEUMO Bio-Connect screw connection EHEDG compliant				
• DN 50, PN 16	**Q05**	✓	✓	✓
• DN 65, PN 16	**Q06**	✓	✓	✓
• DN 80, PN 16	**Q07**	✓	✓	✓
• DN 100, PN 16	**Q08**	✓	✓	✓
• DN 2", PN 16	**Q13**	✓	✓	✓
• DN 2½", PN 16	**Q14**	✓	✓	✓
• DN 3", PN 16	**Q15**	✓	✓	✓
• DN 4", PN 16	**Q16**	✓	✓	✓
Sanitary process connection to NEUMO Bio-Connect flange connection EHEDG compliant				
• DN 50, PN 16	**Q23**	✓	✓	✓
• DN 65, PN 16	**Q24**	✓	✓	✓
• DN 80, PN 16	**Q25**	✓	✓	✓
• DN 100, PN 16	**Q26**	✓	✓	✓
• DN 2", PN 16	**Q31**	✓	✓	✓
• DN 2½", PN 16	**Q32**	✓	✓	✓
• DN 3", PN 16	**Q33**	✓	✓	✓
• DN 4", PN 16	**Q34**	✓	✓	✓

Selection and Ordering data	Order code	HART	PA	FF
Further designs Add "**-Z**" to Article No. and specify Order code.				
Sanitary process connection to NEUMO Bio-Connect clamp connection EHEDG compliant				
• DN 50, PN 16	**Q39**	✓	✓	✓
• DN 65, PN 10	**Q40**	✓	✓	✓
• DN 80, PN 10	**Q41**	✓	✓	✓
• DN 100, PN 10	**Q42**	✓	✓	✓
• DN 2½", PN 16	**Q48**	✓	✓	✓
• DN 3", PN 10	**Q49**	✓	✓	✓
• DN 4", PN 10	**Q50**	✓	✓	✓
Bio-Control sanitary process connection				
• DN 50, PN 16	**Q53**	✓	✓	✓
• DN 65, PN 16	**Q54**	✓	✓	✓
Sanitary process connection to NEUMO Bio-Connect S flange connection				
• DN 2", PN 16	**Q72**	✓	✓	✓
Aseptic threaded socket to DIN 11864-1 Form A				
• DN 50, PN 25	**N33**	✓	✓	✓
• DN 65, PN 25	**N34**	✓	✓	✓
• DN 80, PN 25	**N35**	✓	✓	✓
• DN 100, PN 25	**N36**	✓	✓	✓
Aseptic flange with notch to DIN 11864-2 Form A				
• DN 50, PN 16	**N43**	✓	✓	✓
• DN 65, PN 16	**N44**	✓	✓	✓
• DN 80, PN 16	**N45**	✓	✓	✓
• DN 100, PN 16	**N46**	✓	✓	✓
Aseptic flange with groove to DIN 11864-2 Form A				
• DN 50, PN 16	**N43 + P11**	✓	✓	✓
• DN 65, PN 16	**N44 + P11**	✓	✓	✓
• DN 80, PN 16	**N45 + P11**	✓	✓	✓
• DN 100, PN 16	**N46 + P11**	✓	✓	✓
Aseptic clamp with groove to DIN 11864-3 Form A				
• DN 50, PN 25	**N53**	✓	✓	✓
• DN 65, PN 25	**N54**	✓	✓	✓
• DN 80, PN 16	**N55**	✓	✓	✓
• DN 100, PN 16	**N56**	✓	✓	✓

1) Device plug Han IP65
2) Profisafe transmitters can only be operated with the S7 F Systems V6.1 configuration software in combination with S7-400H.
3) Cannot be ordered with remote seal.
4) When the additional ex option is selected, the ATEX marking on the device is omitted. Only the Ex option selected via the Z option is marked.
5) Special seal in Viton included in the scope of delivery. FKM; temperature range -20 ... +200 °C (-4 ... +392 °C)
6) Cannot be combined with Order code P00. Can only be ordered with silicone oil measuring cell filling.
7) The weldable socket can be ordered under accessories.
8) 3A and EHEDG compliant. The maximum permissible temperatures of the medium depend on the respective cell fillings (see medium conditions).

© Siemens 2020

Selection and Ordering data	Order code			
Additional data		**HART**	**PA**	**FF**
Please add "**-Z**" to Article No. and specify Order code(s) and plain text.				
Measuring range to be set Specify in plain text (max. 5 characters): Y01: ... up to ... mbar, bar, kPa, MPa, psi	**Y01**	✓	✓[1]	
Stainless steel tag plate and entry in device variable (measuring point description) Max. 16 characters, specify in plain text: Y15:	**Y15**	✓	✓	✓
Measuring point text (entry in device variable) Max. 27 characters, specify in plain text: Y16:	**Y16**	✓	✓	✓
Entry of HART address (TAG) Max. 8 characters, specify in plain text: Y17:	**Y17**	✓		
Setting of pressure indicator in pressure units Specify in plain text (standard setting: bar): Y21: mbar, bar, kPa, MPa, psi, ... Note: The following pressure units can be selected: bar, mbar, mm H_2O*), inH_2O*), ftH_2O*), mmHG, inHG, psi, Pa, kPa, MPa, g/cm^2, kg/cm^2, Torr, ATM or % *) ref. temperature 20 °C	**Y21**	✓	✓	✓
Setting of pressure indication in non-pressure units[2] Specify in plain text: Y22: ..... up to ..... l/min, m^3/h, m, USgpm, ... (specification of measuring range in pressure units **"Y01"** is essential, unit with max. 5 characters)	**Y22 + Y01**	✓		
Preset bus address possible between 1 and 126 Specify in plain text: Y25:	**Y25**		✓	✓
Damping adjustment in seconds (0 ... 100 s)	**Y30**	✓	✓	✓

Only Y01, Y15, Y16, Y17, Y21, Y22, Y25 and D05 can be factory preset

✓ = available

ordering example

Item line:	7MF4133-1DB20-1AB7-Z
B line:	A22 + Y01 + Y21
C line:	Y01: 1 ... 10 bar (14.5 ... 145 psi)
C line:	Y21: bar (psi)

1) Measuring accuracies for PROFIBUS PA transmitters with Option Y01 are calculated in the same way as for HART devices.
2) Preset values can only be changed over SIMATIC PDM.

© Siemens 2020

Dimensional drawings

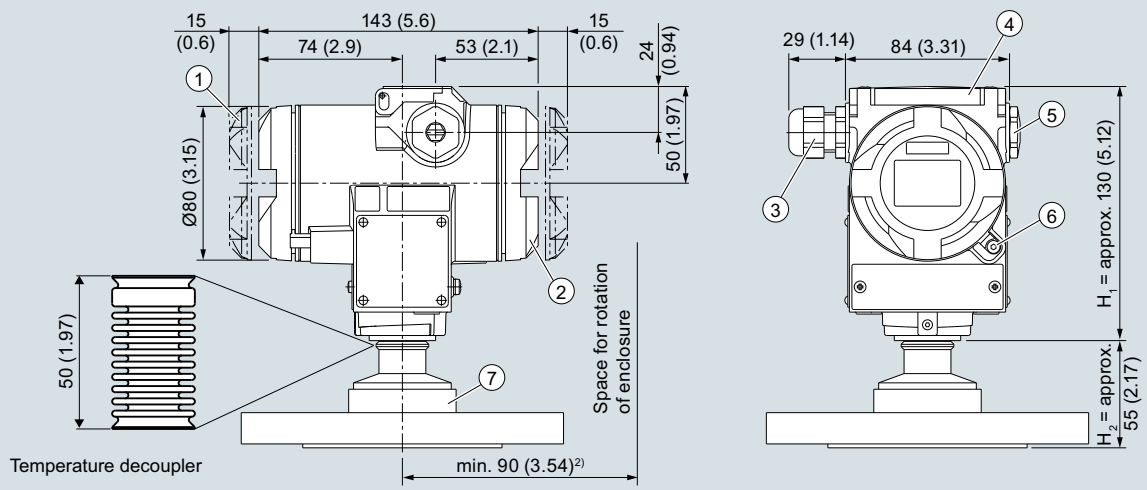

1. Electronic side, digital display (longer overall length for cover with window)[1]
2. Terminal side[1]
3. Electrical connection: Screwed gland M20 x 1,5 or screwed gland ½-14 NPT or M12 device plug
4. Protective cover over keys
5. Blanking plug
6. Screw cover - safety bracket (only for type of protection "Explosion-proof enclosure", not shown in the drawing)
7. Process connection: see flange tables

1) 2) Allow approx. 20 mm (0.79 inch) thread length to permit unscrewing
92 mm (3.6 inch) for minimum distance to permit rotation with indicator

SITRANS P pressure transmitters, DS III series for gauge pressure, with front-flush diaphragm, dimensions in mm (inch)

The diagram shows a SITRANS P DS III with an example of a flange. In this drawing the height is subdivided into H_1 and H_2.

H_1 = Height of the SITRANS P300 up to a defined cross-section

H_2 = Height of the flange up to this defined cross-section

Only the height H_2 is indicated in the dimensions of the flanges.

© Siemens 2020

for gauge/absolute pressure, with front-flush diaphragm

Flanges according to EN and ASME

Flange according to EN

EN 1092-1

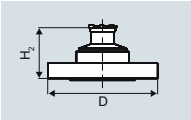

Order code	DN	PN	∅D	H_2
M11	25	40	115 mm (4.5")	Approx. 52 mm (2")
M13	40	40	150 mm (5.9")	
M23	40	100	170 mm (6.7")	
M04	50	16	165 mm (6.5")	
M14	50	40	165 mm (6.5")	
M06	80	16	200 mm (7.9")	
M16	80	40	200 mm (7.9")	

Flanges according to ASME

ASME B16.5

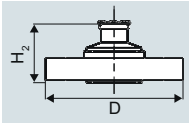

Order code	DN	PN	∅D	H_2
M40	1"	150	110 mm (4.3")	Approx. 52 mm (2")
M41	1½"	150	130 mm (5.1")	
M42	2"	150	150 mm (5.9")	
M43	3"	150	190 mm (7.5")	
M44	4"	150	230 mm (9.1")	
M46	1½"	300	155 mm (6.1")	
M47	2"	300	165 mm (6.5")	
M48	3"	300	210 mm (8.1")	
M49	4"	300	255 mm (10.0")	

NuG and pharmaceutical connections

Connections to DIN

DIN 11851 (milk pipe union with slotted union nut)

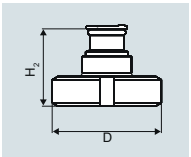

Order code	DN	PN	∅D	H_2
N04	50	25	92 mm (3.6")	Approx. 52 mm (2")
N06	80	25	127 mm (5.0")	

Tri-Clamp nach DIN 32676

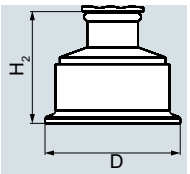

Order code	DN	PN	∅D	H_2
N14	50	16	64 mm (2.5")	Approx. 52 mm (2")
N15	65	10	91 mm (3.6")	

Other connections

Varivent connection

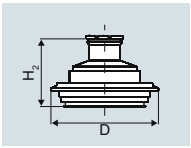

Order code	DN	PN	∅D	H_2
N28	40 ... 125	40	84 mm (3.3")	Approx. 52 mm (2")

Sanitary process connection to DRD

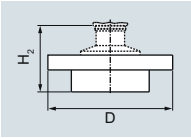

Order code	DN	PN	∅D	H_2
M32	50	40	105 mm (4.1")	Approx. 52 mm (2")

Sanitary process screw connection to NEUMO Bio-Connect

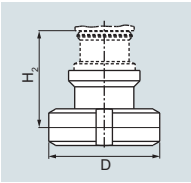

Order code	DN	PN	∅D	H_2
Q05	50	16	82 mm (3.2")	Approx. 52 mm (2")
Q06	65	16	105 mm (4.1")	
Q07	80	16	115 mm (4.5")	
Q08	100	16	145 mm (5.7")	
Q13	2"	16	82 mm (3.2")	
Q14	2½"	16	105 mm (4.1")	
Q15	3"	16	105 mm (4.1")	
Q16	4"	16	145 mm (5.7")	

Sanitary process connection to NEUMO Bio-Connect flange connection

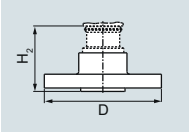

Order code	DN	PN	∅D	H_2
Q23	50	16	110 mm (4.3")	Approx. 52 mm (2")
Q24	65	16	140 mm (5.5")	
Q25	80	16	150 mm (5.9")	
Q26	100	16	175 mm (6.9")	
Q31	2"	16	100 mm (3.9")	
Q32	2½"	16	110 mm (4.3")	
Q33	3"	16	140 mm (5.5")	
Q34	4"	16	175 mm (6.9")	

Sanitary process connection to NEUMO Bio-Connect clamp connection

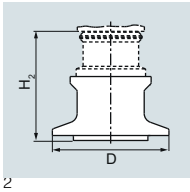

Order code	DN	PN	∅D	H_2
Q39	50	16	77.4 mm (3.0")	Approx. 52 mm (2")
Q40	65	10	90.9 mm (3.6")	
Q41	80	10	106 mm (4.2")	
Q42	100	10	119 mm (4.7")	
Q48	2½"	16	90.9 mm (3.6")	
Q49	3"	10	106 mm (4.2")	
Q50	4"	10	119 mm (4.7")	

Sanitary process connection to NEUMO Bio-Connect S flange connection

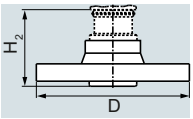

Order code	DN	PN	∅D	H_2
Q72	2"	16	125 mm (4.9")	Approx. 52 mm (2")

Threaded connection G¾", G1" and G2" acc. to DIN 3852

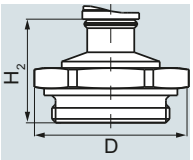

Order code	DN	PN	∅D	H_2
R01	¾"	60	37 mm (1.5")	Approx. 45 mm (1.8")
R02	1"	60	48 mm (1.9")	Approx. 47 mm (1.9")
R04	2"	60	78 mm (3.1")	Approx. 52 mm (2")

© Siemens 2020

Tank connection TG 52/50 and TG52/150

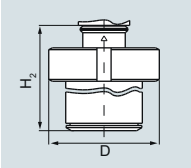

Order code	DN	PN	∅D	H_2
R10	25	40	63 mm (2.5")	Approx. 63 mm (2.5")
R11	25	40	63 mm (2.5")	Approx. 170 mm (6.7")

SMS socket with union nut

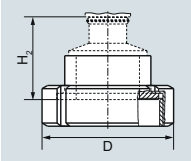

Order code	DN	PN	∅D	H_2
M67	2"	25	84 mm (3.3")	Approx. 52 mm (2")
M68	2½"	25	100 mm (3.9")	
M69	3"	25	114 mm (4.5")	

SMS threaded socket

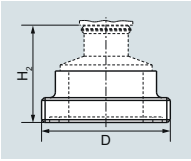

Order code	DN	PN	∅D	H_2
M73	2"	25	70 x 1/6 mm	Approx. 52 mm (2")
M74	2½"	25	85 x 1/6 mm	
M75	3"	25	98 x 1/6 mm	

IDF socket with union nut

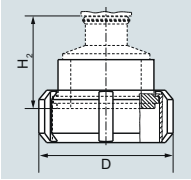

Order code	DN	PN	∅D	H_2
M82	2"	25	77 mm (3")	Approx. 52 mm (2")
M83	2½"	25	91 mm (3.6")	
M84	3"	25	106 mm (4.2")	

IDF threaded socket

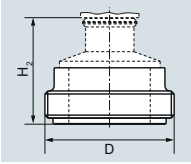

Order code	DN	PN	∅D	H_2
M92	2"	25	64 mm (2.5")	Approx. 52 mm (2")
M93	2½"	25	77.5 mm (3.1")	
M94	3"	25	91 mm (3.6")	

Aseptic threaded socket to DIN 11864-1 Form A

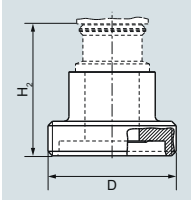

Order code	DN	PN	∅D	H_2
N33	50	25	78 x 1/6"	Approx. 52 mm (2")
N34	65	25	95 x 1/6"	
N35	80	25	110 x ¼"	
N36	100	25	130 x ¼"	

Aseptic flange with notch to DIN 11864-2 Form A

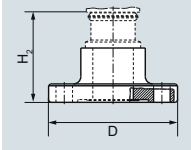

Order code	DN	PN	∅D	H_2
N43	50	16	94	Approx. 52 mm (2")
N44	65	16	113	
N45	80	16	133	
N46	100	16	159	

Aseptic flange with groove to DIN 11864-2 Form A

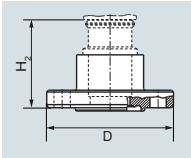

Order code	DN	PN	∅D	H_2
N43 + P11	50	16	94	Approx. 52 mm (2")
N44 + P11	65	16	113	
N45 + P11	80	16	133	
N46 + P11	100	16	159	

Aseptic clamp with groove to DIN 11864-3 Form A

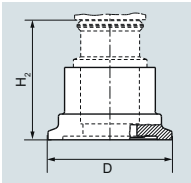

Order code	DN	PN	∅D	H_2
N53	50	25	77.5	Approx. 52 mm (2")
N54	65	25	91	
N55	80	16	106	
N56	100	16	130	

© Siemens 2020

Technical specifications

SITRANS P DS III series for absolute pressure (from the gauge pressure series)

Input				
Measured variable	Absolute pressure			
Measuring span (fully adjustable) or nominal measuring range, max. operating pressure (in accordance with 2014/68/EU Pressure Equipment Directive) and max. test pressure (pursuant to DIN 16086)	**HART**	**PROFIBUS PA/ FOUNDATION Fieldbus**		
	Measuring span	Nominal measuring range	Max. operating pressure MAWP (PS)	Max. perm. test pressure
	8.34 ... 250 mbar a 0.83 ... 25 kPa a 3.35 ... 100 inH_2O a	250 mbar a 25 kPa a 100 inH_2O a	1.5 bar a 150 kPa a 21.8 psi a	6 bar a 600 kPa a 87 psi a
	43.34 ... 1300 mbar a 4.33 ... 130 kPa a 17.42 ... 522.4 inH_2O a	1300 mbar a 130 kPa a 525 inH_2O a	2.6 bar a 260 kPa a 37.7 psi a	10 bar a 1 MPa a 145 psi a
	170 ... 5000 mbar a 17 ... 500 kPa a 2.43 ... 72.5 psi a	5000 mbar a 500 kPa a 72.5 psi a	10 bar a 1 MPa a 145 psi a	30 bar a 3 MPa a 435 psi a
	1 ... 30 bar a 0.1 ... 3 MPa a 14.6 ... 435 psi a	30 bar a 3 MPa a 435 psi a	45 bar a 4.5 MPa a 653 psi a	100 bar a 10 MPa a 1450 psi a
	5,34 ... 160 bar a 0.53 ... 16 MPa a 77.4 ... 2321 psi a	160 bar a 16 MPa a 2321 psi	167 bar a 16,7 MPa a 2422 psi	250 bar a 25 MPa a 3626 psi
	13.34 ... 400 bar a 1.3 ... 40 MPa a 193.4 ... 5802 psi a	400 bar a 40 MPa a 5802 psi a	400 bar a 40 MPa a 5802 psi a	600 bar a 60 MPa a 8702 psi a
	23.34 ... 700 bar a 2.33 ... 70 MPa a 338.43 ... 10153 psi a	700 bar a 70 MPa a 10153 psi a	800 bar a 80 MPa a 11603 psi a	800 bar a 80 MPa a 11603 psi a
Lower measuring limit				
• Measuring cell with silicone oil filling	0 mbar a/0 kPa a/0 psi a			
• Measuring cell with inert filling liquid				
- for temperature of medium -20 °C < ϑ ≤ +60 °C (-4 °F < ϑ ≤ +140 °F)	30 mbar a/3 kPa a/0.44 psi a			
- for temperature of medium 60 °C < ϑ ≤ +100 °C (max. 85 °C for measuring cell 30 bar) (140 °F < ϑ ≤ +212 °F (max. 185 °F for measuring cell 435 psi))	30 mbar a + 20 mbar a · (ϑ - 60 °C)/°C 3 kPa a + 2 kPa a · (ϑ - 60 °C)/°C 0.44 psi a + 0.29 psi a · (ϑ - 140 °F)/°F			
Upper measuring limit	100 % of max. measuring span (for oxygen measurement max. 100 bar/10 MPa/1450 psi and 60 °C (140 °F) ambient temperature/temperature of medium)			
Lower range value	Between the measuring limits (fully adjustable)			

Output	**HART**	**PROFIBUS PA/FOUNDATION Fieldbus**
Output signal	4 ... 20 mA	Digital PROFIBUS PA and FOUNDATION Fieldbus signal
• Lower limit (infinitely adjustable)	3.55 mA, factory preset to 3.84 mA	-
• Upper limit (infinitely adjustable)	23 mA, factory preset to 20.5 mA or optionally set to 22.0 mA	-
Load		
• Without HART	$R_B \leq (U_H$ - 10.5 V)/0.023 A in Ω, U_H: Power supply in V	-
• With HART	R_B = 230 ... 500 Ω (SIMATIC PDM) or R_B = 230 ... 1100 Ω (HART Communicator)	-
Physical bus	-	IEC 61158-2
Protection against polarity reversal	Protected against short-circuit and polarity reversal. Each connection against the other with max. supply voltage.	
Electrical damping (step width 0.1 s)	Set to 2 s (0 ... 100 s)	

© Siemens 2020

SITRANS P DS III series for absolute pressure (from the gauge pressure series)	
Measuring accuracy	Acc. to IEC 60770-1
Reference conditions (All error data refer always refer to the set span)	• Increasing characteristic • Lower range value 0 bar/kPa/psi • Stainless steel seal diaphragm • Silicone oil filling • Room temperature 25 °C (77 °F)
Measuring span ratio r (spread, Turn-Down)	r = max. measuring span/set measuring span or nominal measuring range
Error in measurement at limit setting incl. hysteresis and reproducibility	
• Linear characteristic	
- r ≤ 10	≤ 0.1 %
- 10 < r ≤ 30	≤ 0.2 %
Influence of ambient temperature (in percent per 28 °C (50 °F))	
• 250 mbar a/25 kPa a/3.6 psi a	≤ (0.15 · r + 0.1) %
• 1300 mbar a/130 kPa a/18.8 psi a 5 bar a/500 kPa a/72.5 psi a 30 bar a/3000 kPa a/435 psi a 100 bar a/10 MPa a/1450 psi a 160 bar a/16 MPa a/2321 psi a 400 bar a/40 MPa a/5802 psi a 700 bar a/50 MPa a/10152 psi a	≤ (0.08 · r + 0.16) %
Long-term stability (temperature change ± 30 °C (± 54 °F))	≤ (0.25 · r) % in 5 years
Effect of mounting position (in pressure per change in angle)	≤ 0.05 mbar/0.005 kPa/0.000725 psi per 10° inclination (zero point correction is possible with position error compensation)
Effect of auxiliary power supply (in percent per change in voltage)	0.005 % per 1 V
Measuring value resolution for PROFIBUS PA and FOUNDATION Fieldbus	$3 \cdot 10^{-5}$ of nominal measuring range
Operating conditions	
Degree of protection	
• according to EN 60529	IP66 (optional IP66/IP68)
• according to NEMA 250	Type 4X
Temperature of medium	
• Measuring cell with silicone oil filling	-40 ... +100 °C (-40 ... +212 °F) -20 ... +100 °C (-4 ... +212 °F) with 30 bar a measuring cell
• Measuring cell with inert filling liquid	-20 ... +100 °C (-4 ... +212 °F)
• In conjunction with dust explosion protection	-20 ... +60 °C (-4 ... +140 °F)
Ambient conditions	
• Ambient temperature	
- Transmitter	-40 ... +85 °C (-40 ... +185 °F)
- Display readable	-30 ... +85 °C (-22 ... +185 °F)
• Storage temperature	-50 ... +85 °C (-58 ... +185 °F)
• Climatic class	
- Condensation	Relative humidity 0 ... 100 % Condensation permissible, suitable for use in the tropics
• Electromagnetic Compatibility	
- Emitted interference and interference immunity	Acc. to IEC 61326 and NAMUR NE 21

© Siemens 2020

SITRANS P DS III series for absolute pressure (from the gauge pressure series)		
Design		
Weight (without options)	≈ 1.5 kg (≈ 3.3 lb)	
Enclosure material	Low-copper die-cast aluminum, GD-AlSi 12 or stainless steel precision casting, mat. no. 1.4408	
Wetted parts materials		
• Connection shank	Stainless steel, mat. no. 1.4404/316L or Hastelloy C4, mat. no. 2.4602	
• Oval flange	Stainless steel, mat. no. 1.4404/316L	
• Seal diaphragm	Stainless steel, mat. no. 1.4404/316L or Hastelloy C276, mat. no. 2.4819	
Measuring cell filling	Silicone oil or inert filling liquid (maximum value with oxygen measurement pressure 100 bar (1450 psi) at 60 °C (140 °F))	
Process connection	Connection shank G½B to EN 837-1, female thread ½ -14 NPT or oval flange (PN 160 (MAWP 2320 psi a)) to DIN 19213 with mounting thread M10 or $^{7}/_{16}$-20 UNF to IEC 61518/DIN EN 61518	
Material of mounting bracket		
• Steel	Sheet-steel, Mat. No. 1.0330, chrome-plated	
• Stainless steel 304	Sheet stainless steel, mat. no. 1.4301 (SS 304)	
• Stainless steel 316L	Sheet stainless steel, mat. no. 1.4404 (SS 316L)	
Power supply U_H	**HART**	**PROFIBUS PA/FOUNDATION Fieldbus**
Terminal voltage on transmitter	10.5 ... 45 V DC 10.5 ... 30 V DC in intrinsically-safe mode	-
Power supply		Supplied through bus
Separate supply voltage	-	No
Bus voltage		
• Not Ex	-	9 ... 32 V
• With intrinsically-safe operation	-	9 ... 24 V
Current consumption		
• Basic current (max.)	-	12.5 mA
• Start-up current ≤ basic current	-	Yes
• Max. current in event of fault	-	15.5 mA
Fault disconnection electronics (FDE) available	-	Yes

© Siemens 2020

SITRANS P DS III series for absolute pressure (from the gauge pressure series)		
Certificates and approvals	**HART**	**PROFIBUS PA/ FOUNDATION Fieldbus**
Classification according to PED 2014/68/EU	For gases of fluid group 1 and liquids of fluid group 1; complies with requirements of article 4, paragraph 3 (sound engineering practice)	
Explosion protection		
• Intrinsic safety "i"	PTB 13 ATEX 2007 X	
- Marking	Ex II 1/2 G Ex ia/ib IIC T4/T5/T6 Ga/Gb	
- Permissible ambient temperature	-40 ... +85 °C (-40 ... +185 °F) temperature class T4; -40 ... +70 °C (-40 ... +158 °F) temperature class T5; -40 ... +60 °C (-40 ... +140 °F) temperature class T6	
- Connection	To certified intrinsically-safe circuits with peak values: U_i = 30 V, I_i = 100 mA, P_i = 750 mW; R_i = 300 Ω	FISCO supply unit: U_o = 17.5 V, I_o = 380 mA, P_o = 5.32 W Linear barrier: U_o = 24 V, I_o = 250 mA, P_o = 1.2 W
- Effective internal inductance/capacitance	L_i = 0.4 mH, C_i = 6 nF	L_i = 7 µH, C_i = 1.1 nF
• Explosion-proof "d"	PTB 99 ATEX 1160	
- Marking	Ex II 1/2 G Ex d IIC T4/T6 Gb	
- Permissible ambient temperature	-40 ... +85 °C (-40 ... +185 °F) temperature class T4; -40 ... +60 °C (-40 ... +140 °F) temperature class T6	
- Connection	To circuits with values: U_H = 10.5 ... 45 V DC	To circuits with values: U_H = 9 ... 32 V DC
• Dust explosion protection for zone 20	PTB 01 ATEX 2055	
- Marking	Ex II 1 D Ex ta IIIC T120°C Da Ex II 1/2 D Ex ta/tb IIIC T120°C Da/Db	
- Permissible ambient temperature	-40 ... +85 °C (-40 ... +185 °F)	
- Max. surface temperature	120 °C (248 °F)	
- Connection	To certified intrinsically-safe circuits with peak values: U_i = 30 V, I_i = 100 mA, P_i = 750 mW, R_i = 300 Ω	FISCO supply unit: U_o = 17.5 V, I_o = 380 mA, P_o = 5.32 W Linear barrier: U_o = 24 V, I_o = 250 mA, P_o = 1.2 W
- Effective internal inductance/capacitance	L_i = 0.4 mH, C_i = 6 nF	L_i = 7 µH, C_i = 1.1 nF
• Dust explosion protection for zone 21/22	PTB 01 ATEX 2055	
- Marking	Ex II 2 D Ex tb IIIC T120°C Db	
- Connection	To circuits with values: U_H = 10.5 ... 45 V DC; P_{max} = 1.2 W	To circuits with values: U_H = 9 ... 32 V DC; P_{max} = 1 W
• Type of protection "n" (zone 2)	PTB 13 ATEX 2007 X	
- Marking	Ex II 2/3 G Ex nA IIC T4/T5/T6 Gb/Gc Ex II 2/3 G Ex ic IIC T4/T5/T6 Gb/Gc	
- Connection (Ex nA)	U_m = 45 V	U_m = 32 V
- Connection (Ex ic)	To circuits with values: U_i = 45 V	FISCO supply unit ic: U_o = 17.5 V, I_o = 570 mA Linear barrier: U_o = 32 V, I_o = 132 mA, P_o = 1 W
- Effective internal inductance/capacitance	L_i = 0.4 mH, C_i = 6 nF	L_i = 7 µH, C_i = 1.1 nF
• Explosion protection acc. to FM	Certificate of Compliance 3008490	
- Identification (XP/DIP) or (IS); (NI)	CL I, DIV 1, GP ABCD T4...T6; CL II, DIV 1, GP EFG; CL III; CL I, ZN 0/1 AEx ia IIC T4...T6; CL I, DIV 2, GP ABCD T4...T6; CL II, DIV 2, GP FG; CL III	
• Explosion protection to CSA	Certificate of Compliance 1153651	
- Identification (XP/DIP) or (IS)	CL I, DIV 1, GP ABCD T4...T6; CL II, DIV 1, GP EFG; CL III; Ex ia IIC T4...T6; CL I, DIV 2, GP ABCD T4...T6; CL II, DIV 2, GP FG; CL III	

© Siemens 2020

HART communication	
HART	230 ... 1100 Ω
Protocol	HART Version 5.x
Software for computer	SIMATIC PDM
PROFIBUS PA communication	
Simultaneous communication with master class 2 (max.)	4
The address can be set using	Configuration tool or local operation (standard setting address 126)
Cyclic data usage	
• Output byte	5 (one measured value) or 10 (two measured values)
• Input byte	0, 1, or 2 (register operating mode and reset function for metering)
Internal preprocessing	
Device profile	PROFIBUS PA Profile for Process Control Devices Version 3.0, class B
Function blocks	2
• Analog input	
- Adaptation to customer-specific process variables	Yes, linearly rising or falling characteristic
- Electrical damping, adjustable	0 to 100 s
- Simulation function	Input /Output
- Failure mode	parameterizable (last good value, substitute value, incorrect value)
- Limit monitoring	Yes, one upper and lower warning limit and one alarm limit respectively
• Register (totalizer)	Can be reset, preset, optional direction of counting, simulation function of register output
- Failure mode	parameterizable (summation with last good value, continuous summation, summation with incorrect value)
- Limit monitoring	One upper and lower warning limit and one alarm limit respectively
• Physical block	1
Transducer blocks	2
• Pressure transducer block	
- Can be calibrated by applying two pressures	Yes
- Monitoring of sensor limits	Yes
- Specification of a container characteristic with	Max. 30 nodes
- Square-rooted characteristic for flow measurement	Yes
- Gradual volume suppression and implementation point of square-root extraction	Parameterizable
- Simulation function for measured pressure value and sensor temperature	Constant value or over parameterizable ramp function

FOUNDATION Fieldbus communication	
Function blocks	3 function blocks analog input, 1 function block PID
• Analog input	
- Adaptation to customer-specific process variables	Yes, linearly rising or falling characteristic
- Electrical damping, adjustable	0 ... 100 s
- Simulation function	Output/input (can be locked within the device with a bridge)
- Failure mode	parameterizable (last good value, substitute value, incorrect value)
- Limit monitoring	Yes, one upper and lower warning limit and one alarm limit respectively
- Square-rooted characteristic for flow measurement	Yes
• PID	Standard FOUNDATION Fieldbus function block
• Physical block	1 resource block
Transducer blocks	1 transducer block Pressure with calibration, 1 transducer block LCD
• Pressure transducer block	
- Can be calibrated by applying two pressures	Yes
- Monitoring of sensor limits	Yes
- Simulation function: Measured pressure value, sensor temperature and electronics temperature	Constant value or over parameterizable ramp function

© Siemens 2020

Selection and Ordering data		Article No.
Pressure transmitters for absolute pressure from gauge pressure series SITRANS P DS III with HART		↗ 7MF4233 - ■■■■■ - ■■■■
↗ Click on the Article No. for the online configuration in the PIA Life Cycle Portal.		
Measuring cell filling	**Measuring cell cleaning**	
Silicone oil	normal	1
Inert liquid[1]	grease-free to cleanliness level 2	3
Measuring span (min. ... max.)		
8.34 ... 250 mbar a	(0.13 ... 3.63 psi a)	D
43.34 ... 1300 mbar a	(0.63 ... 18.86 psi a)	F
0.17 ... 5 bar a	(2.43 ... 72.5 psi a)	G
1 ... 30 bar a	(14.6 ... 435 psi a)	H
5.34 ... 160 bar a [2]	(77.4 ... 2 321 psi a)	L
13.34 ... 400 bar a [2]	(193.4 ... 5 802 psi a)	M
23.34 ... 700 bar a [2]	(338.43 ... 10 153 psi a)	N
Wetted parts materials		
Seal diaphragm	Process connection	
Stainless steel	Stainless steel	A
Hastelloy	Stainless steel	B
Hastelloy	Hastelloy	C
Version for diaphragm seals in conjunction with process connector "female thread ½-14 NPT" **(recommended version)** [3) 4) 5) 6) 7)]		Y 1
Version for diaphragm seals in conjunction with process connector "G½B connection shank" [3) 4) 5) 6) 7)]		Y 0
Process connection		
• Connection shank G½B to EN 837-1		0
• Female thread ½-14 NPT		1
• Stainless steel oval flange with process connection (Oval flange has no female thread)		
- Mounting thread $^{7}/_{16}$-20 UNF to IEC 61518/DIN EN 61518		2
- Mounting thread M10 to DIN 19213		3
- Mounting thread M12 to DIN 19213		4
• Male thread M20 x 1.5		5
• Male thread ½ -14 NPT		6
Non-wetted parts materials		
• Enclosure made of die-cast aluminium		0
• Enclosure stainless steel precision casting[8]		3
Version		
• Standard version, German plate inscription, setting for pressure unit: bar		1
• International version, English plate inscription, setting for pressure unit: bar		2
• Chinese version, English plate inscription, setting for pressure unit: Pascal		3
All versions include DVD with compact operating instructions in various EU languages.		
Explosion protection		
• None		A
• With ATEX, Type of protection:		
- "Intrinsic safety (Ex ia)"		B
- "Explosion-proof (Ex d)"[9]		D
- "Intrinsic safety and flameproof enclosure" (Ex ia + Ex d)"[10]		P
- "Ex nA/ic (Zone 2)"[11]		E
- "Intrinsic safety, explosion-proof enclosure and dust explosion protection (Ex ia+ Ex d + Zone 1D/2D)"[10)12)]		R
• FM + CSA intrinsic safe (is)[13]		F
• FM + CSA (is + ep) + Ex ia + Ex d (ATEX) + Zone 1D/2D[10)12)13)]		S
• With FM + CSA, Type of protection:		
- "Intrinsic Safe and Explosion Proof (is + xp)"[9)13)]		N C

Selection and Ordering data	Article No.
Pressure transmitters for absolute pressure from gauge pressure series SITRANS P DS III with HART	7MF4233 - ■■■■■ - ■■■■
Electrical connection/cable entry	
• Screwed gland M20x1.5	B
• Screwed gland ½-14 NPT	C
• Device plug Han 7D (plastic enclosure) incl. mating connector[14]	D
• Device plugs M12 (stainless steel) [15) 16)]	F
Display	
• Without display	0
• Without visible display (display concealed, setting: mA)	1
• With visible display (setting: mA)	6
• with customer-specific display (setting as specified, Order code "Y21" or "Y22" required)	7

Power supply units see Chap. 7 "Supplementary Components".

A quick-start guide is included in the scope of delivery of the device.

1) For oxygen application, add Order code E10.
2) Available soon
3) Version 7MF4233-1DY... only up to max. measuring span 200 mbar a (80 inH_2O a).
4) When also ordering the quality test certificate (factory calibration) according to IEC 60770-2 for transmitters with mounted diaphragm seals: Order this certificate only together with the remote seals. The measuring accuracy of the total combination is certified here.
5) If the inspection certificate 3.1.is ordered for the transmitter with mounted diaphragm seals this certificate must also be ordered with the respective remote seals.
6) The diaphragm seal is to be specified with a separate order number and must be included wiht the transmitter order number, for example 7MF423.-..Y..-.... and 7MF4900-1...-.B
7) The standard measuring cell filling for configurations with remote seals (Y) is silicone oil.
8) Not in conjunction with Electrical connection "device plug Han 7D".
9) Without cable gland, with blanking plug.
10) With enclosed cable gland Ex ia and blanking plug.
11) Configurations with device plugs Han and M12 are only available in Ex ic.
12) Only in connection with IP66.
13) Explosion protection acc. to FM/CSA: suitable for installations according to NEC 500/505.
14) Only in connection with Ex apporval A, B or E.
15) Only in connection with Ex apporval A, B, E or F.
16) M12 delivered without cable socket

© Siemens 2020

for absolute pressure (from gauge pressure series)

Selection and Ordering data		Article No.
Pressure transmitters for absolute pressure from gauge pressure series		
SITRANS P DS III with PROFIBUS PA (PA) ↗		7 M F 4 2 3 4 -
SITRANS P DS III with FOUNDATION Fieldbus (FF) ↗		7 M F 4 2 3 5 -
↗ Click on the Article No. for the online configuration in the PIA Life Cycle Portal.		■■■■■ - ■■■■
Measuring cell filling	**Measuring cell cleaning**	
Silicone oil	normal	1
Inert liquid[1]	grease-free to cleanliness level 2	3
Nominal measuring range		
250 mbar a	(3.63 psi a)	D
1300 mbar a	(18.86 psi a)	F
5 bar a	(72.5 psi a)	G
30 bar a	(435 psi a)	H
160 bar a [2]	(2 321 psi a)	L
400 bar a [2]	(5 802 psi a)	M
700 bar a [2]	(10 153 psi a)	N
Wetted parts materials		
Seal diaphragm	Process connection	
Stainless steel	Stainless steel	A
Hastelloy	Stainless steel	B
Hastelloy	Hastelloy	C
Version for diaphragm seals in conjunction with process connector "female thread ½-14 NPT" **(recommended version)** [3) 4) 5) 6) 7)]		Y 1
Version for diaphragm seals in conjunction with process connector "G½B connection shank"" [3) 4) 5) 6) 7)]		Y 0
Process connection		
• Connection shank G½B to EN 837-1		0
• Female thread ½-14 NPT		1
• Stainless steel oval flange with process connection (Oval flange has no female thread)		
- Mounting thread $^{7}/_{16}$-20 UNF to IEC 61518/DIN EN 61518		2
- Mounting thread M10 to DIN 19213		3
- Mounting thread M12 to DIN 19213		4
• Male thread M20 x 1.5		5
• Male thread ½ -14 NPT		6
Non-wetted parts materials		
• Enclosure made of die-cast aluminium		0
• Enclosure stainless steel precision casting		3
Version		
• Standard version, German plate inscription, setting for pressure unit: bar		1
• International version, English plate inscription, setting for pressure unit: bar		2
• Chinese version, English plate inscription, setting for pressure unit: Pascal		3
All versions include DVD with compact operating instructions in various EU languages.		

Selection and Ordering data	Article No.
Pressure transmitters for absolute pressure from gauge pressure series	
SITRANS P DS III with PROFIBUS PA (PA)	7 M F 4 2 3 4 -
SITRANS P DS III with FOUNDATION Fieldbus (FF)	7 M F 4 2 3 5 -
	■■■■■ - ■■■■
Explosion protection	
• None	A
• With ATEX, Type of protection:	
- "Intrinsic safety (Ex ia)"	B
- "Explosion-proof (Ex d)"[8)]	D
- "Intrinsic safety and flameproof enclosure" (Ex ia + Ex d)"[9)]	P
- "Ex nA/ic (Zone 2)" [10)]	E
- "Intrinsic safety, explosion-proof enclosure and dust explosion protection (Ex ia + Ex d + Zone 1D/2D)"[9) 11)]	R
• FM + CSA intrinsic safe (is)[12)]	F
• FM + CSA (is + ep) + Ex ia + Ex d (ATEX) + Zone 1D/2D[9)11)12)]	S
• With FM + CSA, Type of protection:	
- "Intrinsic Safe and Explosion Proof (is + xp)"[8)12)]	N C
Electrical connection/cable entry	
• Screwed gland M20 x 1.5	B
• Screwed gland ½-14 NPT	C
• Device plugs M12 (stainless steel)[13) 14)]	F
Display	
• Without display	0
• Without visible display (display concealed, setting: bar)	1
• With visible display (setting: bar)	6
• with customer-specific display (setting as specified, Order code "Y21" or "Y22" required)	7

A quick-start guide is included in the scope of delivery of the device.

1) For oxygen application, add Order code E10.
2) Available soon
3) Version 7MF4233-1DY... only up to max. measuring span 200 mbar a (2.9 psi a).
4) When also ordering the quality test certificate (factory calibration) according to IEC 60770-2 for transmitters with mounted diaphragm seals: Order this certificate only together with the remote seals. The measuring accuracy of the total combination is certified here.
5) If the inspection certificate 3.1.is ordered for the transmitter with mounted diaphragm seals this certificate must also be ordered with the respective remote seals.
6) The diaphragm seal is to be specified with a separate order number and must be included wiht the transmitter order number, for example 7MF423.-..Y..-.... and 7MF4900-1...-.B
7) The standard measuring cell filling for configurations with remote seals (Y) is silicone oil.
8) Without cable gland, with blanking plug.
9) With enclosed cable gland Ex ia and blanking plug.
10) Configurations with device plugs Han and M12 are only available in Ex ic.
11) Only in connection with IP66.
12) Explosion protection acc. to FM/CSA: suitable for installations according to NEC 500/505.
13) Only in connection with Ex approval A, B, E or F.
14) M12 delivered without cable socket.

© Siemens 2020

Selection and Ordering data	Order code	HART	PA	FF
Further designs				
Add "**-Z**" to Article No. and specify Order code.				
Pressure transmitter with mounting bracket (1x fixing angle, 2 x nut, 2 x U-washer or 1 x bracket, 2 x nut, 2 x U-washer) made of:				
• Steel	**A01**	✓	✓	✓
• Stainless steel 304	**A02**	✓	✓	✓
• Stainless steel 316L	**A03**	✓	✓	✓
Device plugs[1]				
• Han 7D (metal)	**A30**	✓		
• Han 8D (instead of Han 7D)	**A31**	✓		
• Angled	**A32**	✓		
• Han 8D (metal)	**A33**	✓		
Cable sockets for device plugs M12 (metal (CuZn))	**A50**	✓	✓	✓
Rating plate inscription (instead of German)				
• English	**B11**	✓	✓	✓
• French	**B12**	✓	✓	✓
• Spanish	**B13**	✓	✓	✓
• Italian	**B14**	✓	✓	✓
• Cyrillic (russian)	**B16**	✓	✓	✓
English rating plate Pressure units in inH_20 and/or psi	**B21**	✓	✓	✓
Quality test certificate, 5-point factory calibration (IEC 60770-2)[2]	**C11**	✓	✓	✓
Inspection certificate[3] Acc. to EN 10204-3.1	**C12**	✓	✓	✓
Factory certificate Acc. to EN 10204-2.2	**C14**	✓	✓	✓
Inspection certificate (EN 10204-3.1) PMI test of parts in contact with medium	**C15**	✓	✓	✓
Functional safety (SIL2) Devices suitable for use according to IEC 61508 and IEC 61511. Includes SIL conformity declaration	**C20**	✓		
Functional safety (PROFIsafe) Certificate and PROFIsafe protocol	**C21**[4]		✓	
Functional safety (SIL2/3) Devices suitable for use according to IEC 61508 and IEC 61511. Includes SIL conformity declaration	**C23**	✓		
PED for Russia with initial calibration mark	**C99**	✓	✓	✓
Setting of the upper saturation limit of the output signal to 22.0 mA	**D05**	✓		
Manufacturer's declaration acc. to NACE (MR 0103-2012 and MR 0175-2009)	**D07**	✓	✓	✓
Degree of protection IP66/IP68 (only for M20 x 1.5 and ½-14 NPT)	**D12**	✓	✓	✓
Supplied with oval flange (1 item), PTFE packing and screws in thread of oval flange	**D37**	✓	✓	✓
Capri cable gland 4F CrNi and clamping device (848699 + 810634) included	**D59**	✓	✓	✓
Use in or on zone 1D/2D[5] (only together with type of protection "Intrinsic safety" (transmitter 7MF4...-.....-.B.. Ex ia) and IP65)	**E01**	✓	✓	✓
Oxygen application (In the case of oxygen measurement and inert liquid max. 100 bar (1450 psi) at 60°C (140 °F))	**E10**	✓	✓	✓
Export approval Korea	**E11**	✓	✓	✓

Selection and Ordering data	Order code	HART	PA	FF
Further designs				
Add "**-Z**" to Article No. and specify Order code.				
CRN approval Canada (Canadian Registration Number)	**E22**[6]	✓	✓	✓
Dual seal	**E24**	✓	✓	✓
Explosion-proof "Intrinsic safety" (Ex ia) to INMETRO (Brazil) (only for transmitter 7MF4...-.....-.B..)	**E25**[7]	✓	✓	✓
"Flameproof" explosion protection according to INMETRO (Brazil) (only for transmitter 7MF4...-.....-.D..)	**E26**[7]	✓	✓	✓
Explosion-proof "Intrinsic safety" (Ex ia + Ex d) to INMETRO (Brazil) (only for transmitter 7MF4...-.....-.P..)	**E28**[7]	✓	✓	
Ex Approval IEC Ex (Ex ia) (only for transmitter 7MF4...-.....-.B..)	**E45**[7]	✓	✓	✓
Ex Approval IEC Ex (Ex d) (only for transmitter 7MF4...-.....-.D..)	**E46**[7]	✓	✓	✓
Explosion-proof "Intrinsic safety" to NEPSI (China) (only for transmitter 7MF4...-.....-.B..)	**E55**[7]	✓	✓	✓
Explosion protection "Explosion-proof" to NEPSI (China) (only for transmitter 7MF4...-.....-.D..)	**E56**[7]	✓	✓	✓
Explosion-proof "Zone 2" to NEPSI (China) (only for transmitter 7MF4...-.....-.E..)	**E57**[7]	✓	✓	✓
Ex protection „Ex ia", „Ex d" and „Zone 2" to NEPSI (China) (only for transmitter 7MF4...-.....-.R..)	**E58**[7]	✓	✓	✓
"Intrinsic safety" and "Explosion-proof" explosion protection acc. to Kosha (Korea) (only for transmitter 7MF4...-.....-.[B, D]..-Z + E11)	**E70**[7]	✓	✓	✓
Ex-protection Ex ia according to EAC Ex (Russia)	**E80**	✓	✓	✓
Ex-protection Ex d according to EAC Ex (Russia)	**E81**	✓	✓	✓
Ex-protection Ex nA/ic (Zone 2) according to EAC Ex (Russia)	**E82**	✓	✓	✓
Ex-protection Ex ia + Ex d + Zone 1D/2D according to EAC Ex (Russia)	**E83**	✓	✓	✓
Two coats of lacquer on enclosure and cover (PU on epoxy)	**G10**	✓	✓	✓
Transient protector 6 kV (lightning protect.)	**J01**	✓	✓	✓
Oval flange NAM (ASTAVA)	**J06**	✓	✓	✓
Marine approvals				
• Det Norske Veritas Germanischer Lloyd (DNV-GL)	**S10**	✓	✓	✓
• Lloyds Register (LR)	**S11**	✓	✓	✓
• French marine classification society Bureau Veritas (BV)	**S12**	✓	✓	✓
• American Bureau of Shipping (ABS)	**S14**	✓	✓	✓
• Russian Maritime Register (RMR)	**S16**	✓	✓	✓
• Korean Register of Shipping (KR)	**S17**	✓	✓	✓

1) Device plug Han IP65
2) When also ordering the quality test certificate (factory calibration) according to IEC 60770-2 for transmitters with mounted diaphragm seals: Order this certificate only together with the remote seals. The measuring accuracy of the total combination is certified here.
3) If the inspection certificate 3.1 is ordered for the transmitter with mounted diaphragm seals this certificate must also be ordered with the respective remote seals.
4) Profisafe transmitters can only be operated with the S7 F Systems V6.1 configuration software in combination with S7-400H.
5) Option does not contain gas explosion protection; only dust explosion protection: Use in or at Zone 1D/2D.
6) Cannot be ordered with remote seal.
7) When the additional ex option is selected, the ATEX marking on the device is omitted. Only the Ex option selected via the Z option is marked.

© Siemens 2020

Selection and Ordering data	Order code			
Additional data		**HART**	**PA**	**FF**
Please add "**-Z**" to Article No. and specify Order code(s) and plain text.				
Measuring range to be set Specify in plain text (max. 5 characters): Y01: ... up to ... mbar a, bar a, kPa_{abs}, MPa_{abs}, psi a[2)]	**Y01**	✓	✓[1)]	
Stainless steel tag plate and entry in device variable (measuring point description) Max. 16 characters, specify in plain text: Y15:	**Y15**	✓	✓	✓
Measuring point text (entry in device variable) Max. 27 characters, specify in plain text: Y16:	**Y16**	✓	✓	✓
Entry of HART address (TAG) Max. 8 characters, specify in plain text: Y17:	**Y17**	✓		
Setting of pressure indication in pressure units Specify in plain text (standard setting: bar): Y21: mbar, bar, kPa, MPa, psi, ... Note: The following pressure units can be selected: bar, mbar, mm H_2O[*)], inH_2O[*)], ftH_2O[*)], mmHG, inHG, psi, Pa, kPa, MPa, g/cm^2, kg/cm^2, Torr, ATM or % *) ref. temperature 20 °C	**Y21**	✓	✓	✓
Setting of pressure indication in non-pressure units[3)] Specify in plain text: Y22: ..... up to ..... l/min, m^3/h, m, USgpm, ... (specification of measuring range in pressure units "Y01" is essential, unit with max. 5 characters)	**Y22 + Y01**	✓		
Preset bus address possible between 1 and 126 Specify in plain text: Y25:	**Y25**		✓	✓
Damping adjustment in seconds (0 ... 100 s)	**Y30**	✓	✓	✓

Factory mounting of valve manifolds, see accessories.

Only Y01, Y15, Y16, Y17, Y21, Y22, Y25 and D05 can be factory preset

✓ = available

1) Measuring accuracies for PROFIBUS PA transmitters with Option Y01 are calculated in the same way as for HART devices.

2) Only absolute pressure units selectable. Negative pressure values not permitted.

3) Preset values can only be changed over SIMATIC PDM.

© Siemens 2020

Dimensional drawings

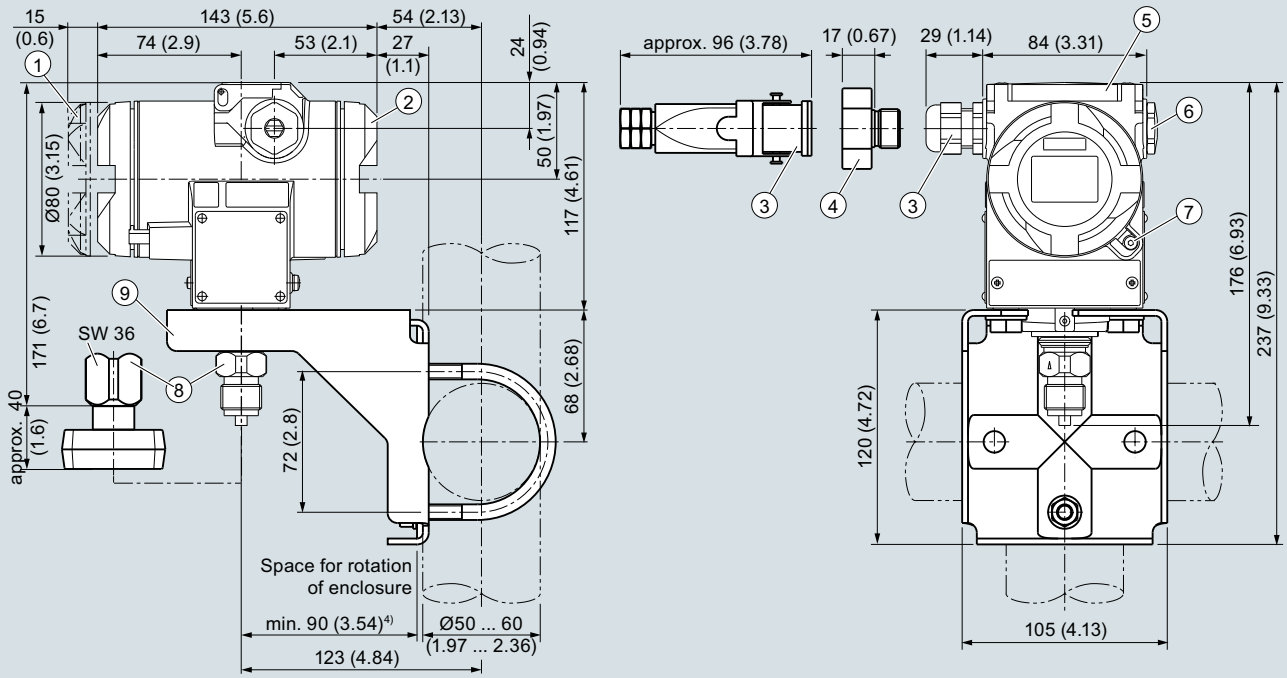

1. Electronic side, digital display (longer overall length for cover with window)[1]
2. Terminal side[1]
3. Electrical connection: Screwed gland M20 x 1,5 or Screwed gland ½-14 NPT or Han 7D/8D device plug[2] [3]
4. Harting adapter
5. Protective cover over keys
6. Blanking plug
7. Screw cover - safety bracket (only for type of protection "Explosion-proof enclosure", not shown in the drawing)
8. Process connection: Connection shank G½B or Oval flange
9. Mounting bracket (option)

1) Allow approx. 20 mm (0.79 inch) thread length to permit unscrewing
2) Not with type of protection "Explosion-proof enclosure"
3) Not with type of protection "FM + CSA" [IS + XP]"
4) Minimum distance for rotating

SITRANS P DS III pressure transmitters for absolute pressure, from the pressure series, dimensions in mm (inch)

© Siemens 2020

Technical specifications

SITRANS P, DS III for absolute pressure (from the differential pressure series)			
Input			
Measured variable	Absolute pressure		
Measuring span (infinitely adjustable) or nominal measuring range, max. operating pressure (in accordance with 97/23/EC Pressure Equipment Directive) and max. test pressure (pursuant to DIN 16086)	**HART**	**PROFIBUS PA/ FOUNDATION Fieldbus**	
	Measuring span	Nominal measuring range	Max. operating pressure MAWP (PS)
	8.34 ... 250 mbar a 0.834 ... 25 kPa a 3 ... 100 inH_2O a	250 mbar a 25 kPa a 100 inH_2O a	32 bar a 3.2 MPa a 464 psi a
	43.34 ... 1300 mbar a 4.33 ... 130 kPa a 17 ... 525 inH_2O a	1300 mbar a 130 kPa a 525 inH_2O a	32 bar a 3.2 MPa a 464 psi a
	170 ... 5000 mbar a 17 ... 500 kPa a 2.43 ... 72.5 psi a	5000 mbar a 500 kPa a 72.5 psi a	32 bar a 3.2 MPa a 464 psi a
	1 ... 30 bar a 0.1 ... 3 MPa a 14.6 ... 435 psi a	30 bar a 3 MPa a 435 psi a	160 bar a 16 MPa a 2320 psi a
	5.3 ... 100 bar a 0.5 ... 10 MPa a 76.9 ... 1450 psi a	100 bar a 10 MPa a 1450 psi a	160 bar a 16 MPa a 2320 psi a
Lower measuring limit			
• Measuring cell with silicone oil filling	0 mbar a/0 kPa a/0 psi a		
• Measuring cell with inert filling liquid			
- for temperature of medium -20 °C < ϑ ≤ +60 °C (-4 °F < ϑ ≤ +140 °F)	30 mbar a/3 kPa a/0.44 psi a		
- for temperature of medium 60 °C < ϑ ≤ +100 °C (max. 85 °C for measuring cell 30 bar) (140 °F < ϑ ≤ +212 °F (max. 185 °F for measuring cell 435 psi))	30 mbar a + 20 mbar a · (ϑ - 60 °C)/°C 3 kPa a + 2 kPa a · (ϑ - 60 °C)/°C 0.44 psi a + 0.29 psi a · (ϑ - 140 °F)/°F		
Upper measuring limit	100 % of max. measuring span (for oxygen measurement max. 100 bar/10 MPa/1450 psi and 60 °C (140 °F) ambient temperature/temperature of medium)		
Lower range value	Between the measuring limits (fully adjustable)		
Output	**HART**	**PROFIBUS PA/ FOUNDATION Fieldbus**	
Output signal	4 ... 20 mA	Digital PROFIBUS PA and FOUNDATION Fieldbus signal	
• Lower limit (infinitely adjustable)	3.55 mA, factory preset to 3.84 mA	-	
• Upper limit (infinitely adjustable)	23 mA, factory preset to 20.5 mA or optionally set to 22.0 mA	-	
Load			
• Without HART	$R_B \leq (U_H - 10.5\ V)/0.023\ A$ in Ω, U_H: Power supply in V	-	
• With HART	R_B = 230 ... 500 Ω (SIMATIC PDM) or R_B = 230 ... 1100 Ω (HART Communicator)	-	
Physical bus	-	IEC 61158-2	
Protection against polarity reversal	Protected against short-circuit and polarity reversal. Each connection against the other with max. supply voltage.		
Electrical damping (step width 0.1 s)	Set to 2 s (0 ... 100 s)		

© Siemens 2020

SITRANS P, DS III for absolute pressure (from the differential pressure series)	
Measuring accuracy	Acc. to IEC 60770-1
Reference conditions (All error data refer always refer to the set span)	• Increasing characteristic • Lower range value 0 bar/kPa/psi • Stainless steel seal diaphragm • Silicone oil filling • Room temperature 25 °C (77 °F)
Measuring span ratio r (spread, Turn-Down)	r = max. measuring span/set measuring span or nominal measuring range
Error in measurement at limit setting incl. hysteresis and reproducibility	
• Linear characteristic	
- r ≤ 10	≤ 0.1 %
- 10 < r ≤ 30	≤ 0.2 %
Influence of ambient temperature (in percent per 28 °C (50 °F))	
• 250 mbar a/25 kPa a/3.6 psi a	≤ (0.15 · r + 0.1) %
• 1300 mbar a/130 kPa a/18.8 psi a 5 bar a/500 kPa a/72.5 psi a 30 bar a/3000 kPa a/435 psi a 100 bar a/10 MPa a/1450 psi a	≤ (0.08 · r + 0.16) %
Long-term stability (temperature change ± 30 °C (± 54 °F))	≤ (0.25 · r) % in 5 years
Effect of mounting position (in pressure per change in angle)	≤ 0.7 mbar/0.07 kPa/0.010 psi per 10° inclination (zero point correction is possible with position error compensation)
Effect of auxiliary power supply (in percent per change in voltage)	0.005 % per 1 V
Measuring value resolution for PROFIBUS PA and FOUNDATION Fieldbus	$3 \cdot 10^{-5}$ of nominal measuring range
Operating conditions	
Degree of protection	
• according to EN 60529	IP66 (optional IP66/IP68)
• according to NEMA 250	Type 4X
Temperature of medium	
• Measuring cell with silicone oil filling	-40 ... +100 °C (-40 ... +212 °F)
• Measuring cell with inert filling liquid	-20 ... +100 °C (-4 ... +212 °F)
• In conjunction with dust explosion protection	-20 ... +60 °C (-4 ... +140 °F)
Ambient conditions	
• Ambient temperature	
- Transmitter	-40 ... +85 °C (-40 ... +185 °F)
- Display readable	-30 ... +85 °C (-22 ... +185 °F)
• Storage temperature	-50 ... +85 °C (-58 ... +185 °F)
• Climatic class	
- Condensation	Relative humidity 0 ... 100 % Condensation permissible, suitable for use in the tropics
• Electromagnetic Compatibility	
- Emitted interference and interference immunity	Acc. to IEC 61326 and NAMUR NE 21

© Siemens 2020

SITRANS P, DS III for absolute pressure (from the differential pressure series)		
Design		
Weight (without options)	≈ 4.5 kg (≈ 9.9 (lb)	
Enclosure material	Low-copper die-cast aluminum, GD-AlSi12 or stainless steel precision casting, mat. no. 1.4408	
Wetted parts materials		
• Seal diaphragm	Stainless steel, mat. no. 1.4404/316L or Hastelloy C276, mat. no. 2.4819, Monel, mat. no. 2.4360, tantalum or gold	
• Process flanges and sealing screw	Stainless steel, mat. no. 1.4408, Hastelloy C4, mat. no. 2.4602 or Monel, mat. no. 2.4360	
• O-Ring	FPM (Viton) or optionally: PTFE, FEP, FEPM and NBR	
Measuring cell filling	Silicone oil or inert filling liquid (maximum value with oxigen measurement pressure 100 bar (1450 psi) at 60 °C (140 °F))	
Process connection	¼-18 NPT and flange connection with mounting thread M10 to DIN 19213 or $^{7}/_{16}$-20 UNF to IEC 61518/DIN EN 61518	
Material of mounting bracket		
• Steel	Sheet-steel, Mat. No. 1.0330, chrome-plated	
• Stainless steel 304	Sheet stainless steel, mat. no. 1.4301 (SS 304)	
• Stainless steel 316L	Sheet stainless steel, mat. no. 1.4404 (SS 316L)	
Power supply U_H	**HART**	**PROFIBUS PA/FOUNDATION Fieldbus**
Terminal voltage on transmitter	10.5 ... 45 V DC 10.5 ... 30 V DC in intrinsically-safe mode	-
Power supply		Supplied through bus
Separate supply voltage	-	No
Bus voltage		
• Not Ex	-	9 ... 32 V
• With intrinsically-safe operation	-	9 ... 24 V
Current consumption		
• Basic current (max.)	-	12.5 mA
• Start-up current ≤ basic current	-	Yes
• Max. current in event of fault	-	15.5 mA
Fault disconnection electronics (FDE) available	-	Yes

© Siemens 2020

SITRANS P, DS III for absolute pressure (from the differential pressure series)		
Certificates and approvals	**HART**	**PROFIBUS PA/ FOUNDATION Fieldbus**
Classification according to PED 2014/68/EU	For gases of fluid group 1 and liquids of fluid group 1; complies with requirements of article 4, paragraph 3 (sound engineering practice)	
Explosion protection		
• Intrinsic safety "i"	PTB 13 ATEX 2007 X	
- Marking	Ex II 1/2 G Ex ia/ib IIC T4/T5/T6 Ga/Gb	
- Permissible ambient temperature	-40 ... +85 °C (-40 ... +185 °F) temperature class T4; -40 ... +70 °C (-40 ... +158 °F) temperature class T5; -40 ... +60 °C (-40 ... +140 °F) temperature class T6	
- Connection	To certified intrinsically-safe circuits with peak values: U_i = 30 V, I_i = 100 mA, P_i = 750 mW; R_i = 300 Ω	FISCO supply unit: U_o = 17.5 V, I_o = 380 mA, P_o = 5.32 W Linear barrier: U_o = 24 V, I_o = 250 mA, P_o = 1.2 W
- Effective internal inductance/capacitance	L_i = 0.4 mH, C_i = 6 nF	L_i = 7 µH, C_i = 1.1 nF
• Explosion-proof "d"	PTB 99 ATEX 1160	
- Marking	Ex II 1/2 G Ex d IIC T4/T6 Gb	
- Permissible ambient temperature	-40 ... +85 °C (-40 ... +185 °F) temperature class T4; -40 ... +60 °C (-40 ... +140 °F) temperature class T6	
- Connection	To circuits with values: $_H$ = 10.5 ... 45 V DC	To circuits with values: U_H = 9 ... 32 V DC
• Dust explosion protection for zone 20	PTB 01 ATEX 2055	
- Marking	Ex II 1 D Ex ta IIIC T120°C Da Ex II 1/2 D Ex ta/tb IIIC T120°C Da/Db	
- Permissible ambient temperature	-40 ... +85 °C (-40 ... +185 °F)	
- Max. surface temperature	120 °C (248 °F)	
- Connection	To certified intrinsically-safe circuits with peak values: U_i = 30 V, I_i = 100 mA, P_i = 750 mW, R_i = 300 Ω	FISCO supply unit: U_o = 17.5 V, I_o = 380 mA, P_o = 5.32 W Linear barrier: U_o = 24 V, I_o = 250 mA, P_o = 1.2 W
- Effective internal inductance/capacitance	L_i = 0.4 mH, C_i = 6 nF	L_i = 7 µH, C_i = 1.1 nF
• Dust explosion protection for zone 21/22	PTB 01 ATEX 2055	
- Marking	Ex II 2 D Ex tb IIIC T120°C Db	
- Connection	To circuits with values: U_H = 10.5 ... 45 V DC; P_{max} = 1.2 W	To circuits with values: U_H = 9 ... 32 V DC; P_{max} = 1 W
• Type of protection "n" (zone 2)	PTB 13 ATEX 2007 X	
- Marking	Ex II 2/3 G Ex nA IIC T4/T5/T6 Gb/Gc Ex II 2/3 G Ex ic IIC T4/T5/T6 Gb/Gc	
- Connection (Ex nA)	U_m = 45 V	U_m = 32 V
- Connection (Ex ic)	To circuits with values: U_i = 45 V	FISCO supply unit ic: U_o = 17.5 V, I_o = 570 mA Linear barrier: U_o = 32 V, I_o = 132 mA, P_o = 1 W
- Effective internal inductance/capacitance	L_i = 0.4 mH, C_i = 6 nF	L_i = 7 µH, C_i = 1.1 nF
• Explosion protection acc. to FM	Certificate of Compliance 3008490	
- Identification (XP/DIP) or (IS); (NI)	CL I, DIV 1, GP ABCD T4...T6; CL II, DIV 1, GP EFG; CL III; CL I, ZN 0/1 AEx ia IIC T4...T6; CL I, DIV 2, GP ABCD T4...T6; CL II, DIV 2, GP FG; CL III	
• Explosion protection to CSA	Certificate of Compliance 1153651	
- Identification (XP/DIP) or (IS)	CL I, DIV 1, GP ABCD T4...T6; CL II, DIV 1, GP EFG; CL III; Ex ia IIC T4...T6; CL I, DIV 2, GP ABCD T4...T6; CL II, DIV 2, GP FG; CL III	

© Siemens 2020

HART communication	
HART	230 ... 1100 Ω
Protocol	HART Version 5.x
Software for computer	SIMATIC PDM
PROFIBUS PA communication	
Simultaneous communication with master class 2 (max.)	4
The address can be set using	Configuration tool or local operation (standard setting address 126)
Cyclic data usage	
• Output byte	5 (one measured value) or 10 (two measured values)
• Input byte	0, 1, or 2 (register operating mode and reset function for metering)
Internal preprocessing	
Device profile	PROFIBUS PA Profile for Process Control Devices Version 3.0, class B
Function blocks	2
• Analog input	
- Adaptation to customer-specific process variables	Yes, linearly rising or falling characteristic
- Electrical damping, adjustable	0 ... 100 s
- Simulation function	Input /Output
- Failure mode	parameterizable (last good value, substitute value, incorrect value)
- Limit monitoring	Yes, one upper and lower warning limit and one alarm limit respectively
• Register (totalizer)	Can be reset, preset, optional direction of counting, simulation function of register output
- Failure mode	parameterizable (summation with last good value, continuous summation, summation with incorrect value)
- Limit monitoring	One upper and lower warning limit and one alarm limit respectively
• Physical block	1
Transducer blocks	2
• Pressure transducer block	
- Can be calibrated by applying two pressures	Yes
- Monitoring of sensor limits	Yes
- Specification of a container characteristic with	Max. 30 nodes
- Square-rooted characteristic for flow measurement	Yes
- Gradual volume suppression and implementation point of square-root extraction	Parameterizable
- Simulation function for measured pressure value and sensor temperature	Constant value or over parameterizable ramp function

FOUNDATION Fieldbus communication	
Function blocks	3 function blocks analog input, 1 function block PID
• Analog input	
- Adaptation to customer-specific process variables	Yes, linearly rising or falling characteristic
- Electrical damping, adjustable	0 to 100 s
- Simulation function	Output/input (can be locked within the device with a bridge)
- Failure mode	parameterizable (last good value, substitute value, incorrect value)
- Limit monitoring	Yes, one upper and lower warning limit and one alarm limit respectively
- Square-rooted characteristic for flow measurement	Yes
• PID	Standard FOUNDATION Fieldbus function block
• Physical block	1 resource block
Transducer blocks	1 transducer block Pressure with calibration, 1 transducer block LCD
• Pressure transducer block	
- Can be calibrated by applying two pressures	Yes
- Monitoring of sensor limits	Yes
- Simulation function: Measured pressure value, sensor temperature and electronics temperature	Constant value or over parameterizable ramp function

© Siemens 2020

Selection and Ordering data		Article No.
Pressure transmitters for absolute pressure from differential pressure series, SITRANS P DS III with HART		↗ 7MF4333- ■■■■■-■■■■
↗ Click on the Article No. for the online configuration in the PIA Life Cycle Portal.		
Measuring cell filling	**Measuring cell cleaning**	
Silicone oil	normal	1
Inert liquid[1]	grease-free to cleanliness level 2	3
Measuring span (min. ... max.)		
8.34 ... 250 mbar a	(0.13 ... 3.63 psi a)	D
43.34 ... 1300 mbar a	(0.63 ... 18.86 psi a)	F
0.17 ... 5 bar a	(2.43 ... 72.5 psi a)	G
1 ... 30 bar a	(14.6 ... 435 psi a)	H
5.3 ... 100 bar a	(76.9 ... 1450 psi a)	K E
Wetted parts materials		
Seal diaphragm	Parts of measuring cell	
Stainless steel	Stainless steel	A
Hastelloy	Stainless steel	B
Hastelloy	Hastelloy	C
Tantalum	Tantalum	E
Monel	Monel	H
Gold	Gold	L
Version for diaphragm seal[2) 3) 4) 5) 6)]		Y
Process connection		
Female thread ¼-18 NPT with flange connection		
• Sealing screw opposite process connection		
- Mounting thread $^{7}/_{16}$-20 UNF to IEC 61518/DIN EN 61518		2
- Mounting thread M10 to DIN 19213 (only for replacement requirement)		0
• Vent on side of process flange [7)]		
- Mounting thread $^{7}/_{16}$-20 UNF to IEC 61518/DIN EN 61518		6
- Mounting thread M10 to DIN 19213 (only for replacement requirement)		4
Non-wetted parts materials		
process flange screws	Electronics enclosure	
Stainless steel	Die-cast aluminum	2
Stainless steel	Stainless steel precision casting[8)]	3
Version		
• Standard version, German plate inscription, setting for pressure unit: bar		1
• International version, English plate inscription, setting for pressure unit: bar		2
• Chinese version, English plate inscription, setting for pressure unit: Pascal		3
All versions include DVD with compact operating instructions in various EU languages.		
Explosion protection		
• None		A
• With ATEX, Type of protection:		
- "Intrinsic safety (Ex ia)"		B
- "Explosion-proof (Ex d)"[9)]		D
- "Intrinsic safety and flameproof enclosure" (Ex ia + Ex d)" [10)]		P
- "Ex nA/ic (Zone 2)"[11)]		E
- "Intrinsic safety, explosion-proof enclosure and dust explosion protection (Ex ia+ Ex d + Zone 1D/2D)"[10)12)]		R
• FM + CSA intrinsic safe (is)[13)]		F
• FM + CSA (is + ep) + Ex ia + Ex d (ATEX) + Zone 1D/2D[10)12)13)]		S
• With FM + CSA, Type of protection:		
- "Intrinsic Safe and Explosion Proof (is + xp)" [9)13)]		N C

Selection and Ordering data	Article No.
Pressure transmitters for absolute pressure from differential pressure series, SITRANS P DS III with HART	7MF4333- ■■■■■-■■■■
Electrical connection/cable entry	
• Screwed gland M20 x 1.5	B
• Screwed gland ½-14 NPT	C
• Device plug Han 7D (plastic enclosure) incl. mating connector[14)]	D
• Device plugs M12 (stainless steel) [15) 16)]	F
Display	
• Without display	0
• Without visible display (display concealed, setting: mA)	1
• With visible display (setting: mA)	6
• with customer-specific display (setting as specified, Order code "Y21" or "Y22" required)	7

Power supply units see Chap. 7 "Supplementary Components".

Included in delivery of the device:
- Quick-start guide
- Sealing plug(s) or sealing screw(s) for the process flanges(s)

1) For oxygen applications, add Order code E10.
2) Version 7MF4333-1DY... only up to max. measuring span 200 mbar a (2.9 psi a).
3) When also ordering the quality test certificate (factory calibration) according to IEC 60770-2 for transmitters with mounted diaphragm seals: Order this certificate only together with the remote seals. The measuring accuracy of the total combination is certified here.
4) If the inspection certificate 3.1.is ordered for the transmitter with mounted diaphragm seals this certificate must also be ordered with the respective remote seals.
5) The diaphragm seal is to be specified with a separate order number and must be included wiht the transmitter order number, for example 7MF433.-..Y..-.... and 7MF4900-1...-.B
6) The standard measuring cell filling for configurations with remote seals (Y) is silicone oil.
7) Not for measuring span "5.3 ... 100 bar a (76.9 ... 1450 psi a)". Position of the top vent valve in the process flange (see dimensional drawing).
8) Not in conjunction with Electrical connection "device plug Han 7D".
9) Without cable gland, with blanking plug
10) With enclosed cable gland Ex ia and blanking plug
11) Configurations with device plugs Han and M12 are only available in Ex ic.
12) Only in connection with IP66.
13) Explosion protection acc. to FM/CSA: suitable for installations according to NEC 500/505.
14) Only in connection with Ex apporval A, B or E.
15) Only in connection with Ex approval A, B, E or F.
16) M12 delivered without cable socket.

© Siemens 2020

for absolute pressure (from differential pressure series)

Selection and Ordering data		Article No.
Pressure transmitter for absolute pressure from differential pressure series		
SITRANS P DS III with PROFIBUS PA (PA) ↗		7MF4334-
SITRANS P DS III with FOUNDATION Fieldbus (FF) ↗		7MF4335-
↗ Click on the Article No. for the online configuration in the PIA Life Cycle Portal.		■■■■■-■■■■
Measuring cell filling	**Measuring cell cleaning**	
Silicone oil	normal	1
Inert liquid[1]	grease-free to cleanliness level 2	3
Nominal measuring range		
250 mbar a	(3.63 psi a)	D
1300 mbar a	(18.86 psi a)	F
5 bar a	(72.5 psi a)	G
30 bar a	(435 psi a)	H
100 bar a	(1450 psi a)	K E
Wetted parts materials		
Seal diaphragm	Parts of measuring cell	
Stainless steel	Stainless steel	A
Hastelloy	Stainless steel	B
Hastelloy	Hastelloy	C
Tantalum	Tantalum	E
Monel	Monel	H
Gold	Gold	L
Version as diaphragm seal [2) 3) 4) 5) 6)]		Y
Process connection		
Female thread ¼-18 NPT with flange connection		
• Sealing screw opposite process connection		
- Mounting thread $^{7}/_{16}$-20 UNF to IEC 61518/DIN EN 61518		2
- Mounting thread M10 to DIN 19213 (only for replacement requirement)		0
• Vent on side of process flange [7)]		
- Mounting thread $^{7}/_{16}$-20 UNF to IEC 61518/DIN EN 61518		6
- Mounting thread M10 to DIN 19213 (only for replacement requirement)		4
Non-wetted parts materials		
process flange screws	Electronics enclosure	
Stainless steel	Die-cast aluminum	2
Stainless steel	Stainless steel precision casting	3
Version		
• Standard version, German plate inscription, setting for pressure unit: bar		1
• International version, English plate inscription, setting for pressure unit: bar		2
• Chinese version, English plate inscription, setting for pressure unit: Pascal		3
All versions include DVD with compact operating instructions in various EU languages.		
Explosion protection		
• None		A
• With ATEX, Type of protection:		
- "Intrinsic safety (Ex ia)"		B
- "Explosion-proof (Ex d)"[8)]		D
- "Intrinsic safety and flameproof enclosure" (Ex ia + Ex d)" [9)]		P
- "Ex nA/ic (Zone 2)"[10)]		E
- "Intrinsic safety, explosion-proof enclosure and dust explosion protection (Ex ia + Ex d + Zone 1D/2D)"[9) 11)]		R
• FM + CSA intrinsic safe (is)[12)]		F
• FM + CSA (is + ep) + Ex ia + Ex d (ATEX) + Zone 1D/2D[9)11)12)]		S
• With FM + CSA, Type of protection:		
- "Intrinsic Safe and Explosion Proof (is + xp)" [8)12)]		N C

Selection and Ordering data	Article No.
Pressure transmitter for absolute pressure from differential pressure series	
SITRANS P DS III with PROFIBUS PA (PA)	7MF4334-
SITRANS P DS III with FOUNDATION Fieldbus (FF)	7MF4335-
	■■■■-■■■■
Electrical connection/cable entry	
• Screwed gland M20 x 1.5	B
• Screwed gland ½-14 NPT	C
• Device plugs M12 (stainless steel)[13)14)]	F
Display	
• Without display	0
• Without visible display (display concealed, setting: bar)	1
• With visible display (setting: bar)	6
• With customer-specific display (setting as specified, Order code "Y21" required)	7

Included in delivery of the device:
- Quick-start guide
- Sealing plug(s) or sealing screw(s) for the process flanges(s)

1) For oxygen application, add Order code E10.
2) Version 7MF4334-1DY... only up to max. measuring span 200 mbar a (80 inH_2O a).
3) When also ordering the quality test certificate (factory calibration) according to IEC 60770-2 for transmitters with mounted diaphragm seals: Order this certificate only together with the remote seals. The measuring accuracy of the total combination is certified here.
4) If the inspection certificate 3.1.is ordered for the transmitter with mounted diaphragm seals this certificate must also be ordered with the respective remote seals.
5) The diaphragm seal is to be specified with a separate order number and must be included wiht the transmitter order number, for example 7MF433.-..Y..-.... and 7MF4900-1...-.B
6) The standard measuring cell filling for configurations with remote seals (Y) is silicone oil.
7) Not for nominal measuring range 100 bar a (1450 psi a). Position of the top vent valve in the process flange (see dimensional drawing).
8) Without cable gland, with blanking plug
9) With enclosed cable gland Ex ia and blanking plug
10) Configurations with device plugs Han and M12 are only available in Ex ic.
11) Only in connection with IP66.
12) Explosion protection acc. to FM/CSA: suitable for installations according to NEC 500/505.
13) 11Only in connection with Ex approval A, B, E or F.
14) M12 delivered without cable socket

© Siemens 2020

Selection and Ordering data	Order code	HART	PA	FF
Further designs Add "**-Z**" to Article No. and specify Order code.				
Pressure transmitter with mounting bracket (1x fixing angle, 2 x nut, 2 x U-washer or 1 x bracket, 2 x nut, 2 x U-washer) made of:				
• Steel	**A01**	✓	✓	✓
• Stainless steel 304	**A02**	✓	✓	✓
• Stainless steel 316L	**A03**	✓	✓	✓
O-rings for process flanges (instead of FPM (Viton))				
• PTFE (Teflon)	**A20**	✓	✓	✓
• FEP (with silicone core, approved for food)	**A21**	✓	✓	✓
• FFPM (Kalrez, for measured medium temperatures -15 ... 100 °C (5 ... 212 °F))	**A22**	✓	✓	✓
• NBR (Buna N)	**A23**	✓	✓	✓
Device plugs[1)]				
• Han 7D (metal)	**A30**	✓		
• Han 8D (instead of Han 7D)	**A31**	✓		
• Angled	**A32**	✓		
• Han 8D (metal)	**A33**	✓		
Sealing screw ¼-18 NPT, with vent valve in mat. of process flanges	**A40**	✓	✓	✓
Cable sockets for device plugs M12 (metal (CuZn))	**A50**	✓	✓	✓
Rating plate inscription (instead of German)				
• English	**B11**	✓	✓	✓
• French	**B12**	✓	✓	✓
• Spanish	**B13**	✓	✓	✓
• Italian	**B14**	✓	✓	✓
• Cyrillic (russian)	**B16**	✓	✓	✓
English rating plate Pressure units in in$H_2$0 and/or psi	**B21**	✓	✓	✓
Quality test certificate, 5-point factory calibration (IEC 60770-2)[2)]	**C11**	✓	✓	✓
Inspection certificate[3)] Acc. to EN 10204-3.1	**C12**	✓	✓	✓
Factory certificate Acc. to EN 10204-2.2	**C14**	✓	✓	✓
Inspection certificate (EN 10204-3.1) PMI test of parts in contact with medium	**C15**	✓	✓	✓
Functional safety (SIL2) Devices suitable for use according to IEC 61508 and IEC 61511. Includes SIL conformity declaration	**C20**	✓		
Functional safety (PROFIsafe) Certificate and PROFIsafe protocol	**C21**[4)]		✓	
Functional safety (SIL2/3) Devices suitable for use according to IEC 61508 and IEC 61511. Includes SIL conformity declaration	**C23**	✓		
PED for Russia with initial calibration mark	**C99**	✓	✓	✓

Selection and Ordering data	Order code	HART	PA	FF
Further designs Add "**-Z**" to Article No. and specify Order code.				
Setting of the upper saturation limit of the output signal to 22.0 mA	**D05**	✓		
Manufacturer's declaration acc. to NACE (MR 0103-2012 and MR 0175-2009) (only together with seal diaphragm made of Hastelloy and stainless steel)	**D07**	✓	✓	✓
Degree of protection IP66/IP68 (only for M20 x 1.5 and ½-14 NPT)	**D12**	✓	✓	✓
Supplied with oval flange (1 item), PTFE packing and screws in thread of process flange	**D37**	✓	✓	✓
Capri cable gland 4F CrNi and clamping device (848699 + 810634) included	**D59**	✓	✓	✓

© Siemens 2020

for absolute pressure (from differential pressure series)

Selection and Ordering data	Order code	HART	PA	FF
Further designs Add "**-Z**" to Article No. and specify Order code.				
Use in or on zone 1D/2D[5] (only together with type of protection "Intrinsic safety" (transmitter 7MF4...-.....-.B.. Ex ia)" and IP66)	**E01**	✓	✓	✓
Oxygen application (In the case of oxygen measurement and inert liquid max. 100 bar (1450 psi) at 60°C (140 °F))	**E10**	✓	✓	✓
Export approval Korea	**E11**	✓	✓	✓
CRN approval Canada (Canadian Registration Number)	**E22**[6]	✓	✓	✓
Dual seal	**E24**	✓	✓	✓
Explosion-proof "Intrinsic safety" (Ex ia) to INMETRO (Brazil) (only for transmitter 7MF4...-.....-.B..)	**E25**[7]	✓	✓	✓
"Flameproof" explosion protection according to INMETRO (Brazil) (only for transmitter 7MF4...-.....-.D..)	**E26**[7]	✓	✓	✓
Explosion-proof "Intrinsic safety" (Ex ia + Ex d) to INMETRO (Brazil) (only for transmitter 7MF4...-.....-.P..)	**E28**[7]	✓	✓	
Ex Approval IEC Ex (Ex ia) (only for transmitter 7MF4...-.....-.B..)	**E45**[7]	✓	✓	✓
Ex Approval IEC Ex (Ex d) (only for transmitter 7MF4...-.....-.D..)	**E46**[7]	✓	✓	✓
Explosion-proof "Intrinsic safety" to NEPSI (China) (only for transmitter 7MF4...-.....-.B..)	**E55**[7]	✓	✓	✓
Explosion protection "Explosion-proof" to NEPSI (China) (only for transmitter 7MF4...-.....-.D..)	**E56**[7]	✓	✓	✓
Explosion-proof "Zone 2" to NEPSI (China) (only for transmitter 7MF4...-.....-.E..)	**E57**[7]	✓	✓	✓
Ex protection „Ex ia", „Ex d" and „Zone 2" to NEPSI (China) (only for transmitter 7MF4...-.....-.R..)	**E58**[7]	✓	✓	✓
"Intrinsic safety" and "Explosion-proof" explosion protection acc. to Kosha (Korea) (only for transmitter 7MF4...-.....-.[B, D]..-Z + E11)	**E70**[7]	✓	✓	✓
Ex-protection Ex ia according to EAC Ex (Russia)	**E80**	✓	✓	✓
Ex-protection Ex d according to EAC Ex (Russia)	**E81**	✓	✓	✓
Ex-protection Ex nA/ic (Zone 2) according to EAC Ex (Russia)	**E82**	✓	✓	✓
Ex-protection Ex ia + Ex d + Zone 1D/2D according to EAC Ex (Russia)	**E83**	✓	✓	✓
Two coats of lacquer on enclosure and cover (PU on epoxy)	**G10**	✓	✓	✓
Interchanging of process connection side	**H01**	✓	✓	✓
Vent on side for gas measurements	**H02**	✓	✓	✓
Stainless steel process flanges for vertical differential pressure lines (not together with K01, K02 and K04)[8]	**H03**	✓	✓	✓

Selection and Ordering data	Order code	HART	PA	FF
Further designs Add "**-Z**" to Article No. and specify Order code.				
Transient protector 6 kV (lightning protection)	**J01**	✓	✓	✓
Chambered graphite gasket for process flange	**J02**	✓	✓	✓
Chambered PTFE graphite gasket	**J03**	✓	✓	✓
EPDM O-rings for process flange with approval (WRC/WRAS)	**J05**	✓	✓	✓
Vent valve or blanking plug of process flange welded-in (orientation: on right when viewing the display)[9]	**J08**	✓	✓	✓
Vent valve or blanking plug of process flange welded-in (orientation: on left when viewing the display)[9]	**J09**	✓	✓	✓
Process flange				
• Hastelloy	**K01**	✓	✓	✓
• Monel	**K02**	✓	✓	✓
• Stainless steel with PVDF insert max. PN 10 (MAWP 145 psi), max. temperature of medium 90 °C (194 °F) For ½-14 NPT inner process connection on the side in the middle of the process flange, vent valve not possible	**K04**	✓	✓	✓
Marine approvals				
• Det Norske Veritas Germanischer Lloyd (DNV-GL)	**S10**	✓	✓	✓
• Lloyds Register (LR)	**S11**	✓	✓	✓
• French marine classification society Bureau Veritas (BV)	**S12**	✓	✓	✓
• American Bureau of Shipping (ABS)	**S14**	✓	✓	✓
• Russian Maritime Register (RMR)	**S16**	✓	✓	✓
• Korean Register of Shipping (KR)	**S17**	✓	✓	✓

1) Device plug Han IP65

2) When also ordering the quality test certificate (factory calibration) according to IEC 60770-2 for transmitters with mounted diaphragm seals: Order this certificate only together with the remote seals. The measuring accuracy of the total combination is certified here.

3) If the inspection certificate 3.1.is ordered for the transmitter with mounted diaphragm seals this certificate must also be ordered with the respective remote seals.

4) Profisafe transmitters can only be operated with the S7 F Systems V6.1 configuration software in combination with S7-400H

5) Option does not contain gas explosion protection; only dust explosion protection: Use in or at Zone 1D/2D.

6) Cannot be ordered with remote seal.

7) When the additional ex option is selected, the ATEX marking on the device is omitted. Only the Ex option selected via the Z option is marked.

8) Not suitable for connection of remote seals.

9) Blanking plug is standard configuration. Order option A40 if a vent valve is required instead of a blanking plug.

© Siemens 2020

Selection and Ordering data	Order code			
Additional data		**HART**	**PA**	**FF**
Please add "**-Z**" to Article No. and specify Order code(s) and plain text.				
Measuring range to be set Specify in plain text (max. 5 characters): Y01: ... up to ... mbar a, bar a, kPa_{abs}, MPa_{abs}, psi a[2)]	**Y01**	✓	✓[1)]	
Stainless steel tag plate and entry in device variable (measuring point description) Max. 16 characters, specify in plain text: Y15:	**Y15**	✓	✓	✓
Measuring point text (entry in device variable) Max. 27 characters, specify in plain text: Y16:	**Y16**	✓	✓	✓
Entry of HART address (TAG) Max. 8 characters, specify in plain text: Y17:	**Y17**	✓		
Setting of pressure indication in pressure units Specify in plain text (standard setting: bar): Y21: mbar, bar, kPa, MPa, psi, ... Note: The following pressure units can be selected: bar, mbar, mm H_2O*), inH_2O*), ftH_2O*), mmHG, inHG, psi, Pa, kPa, MPa, g/cm^2, kg/cm^2, Torr, ATM or % *) ref. temperature 20 °C	**Y21**	✓	✓	✓
Setting of pressure indication in non-pressure units[3)] Specify in plain text: Y22: ..... up to ..... l/min, m^3/h, m, USgpm, ... (specification of measuring range in pressure units **"Y01"** is essential, unit with max. 5 characters)	**Y22 + Y01**	✓		
Preset bus address possible between 1 and 126 Specify in plain text: Y25:	**Y25**		✓	✓
Damping adjustment in seconds (0 ... 100 s)	**Y30**	✓	✓	✓

Factory mounting of valve manifolds, see accessories.

Only Y01, Y15, Y16, Y17, Y21, Y22, Y25 and D05 can be factory preset

✓ = available

1) Measuring accuracies for PROFIBUS PA transmitters with Option Y01 are calculated in the same way as for HART devices.
2) Only absolute pressure units selectable. Negative pressure values not permitted.
3) Preset values can only be changed over SIMATIC PDM.

© Siemens 2020

Dimensional drawings

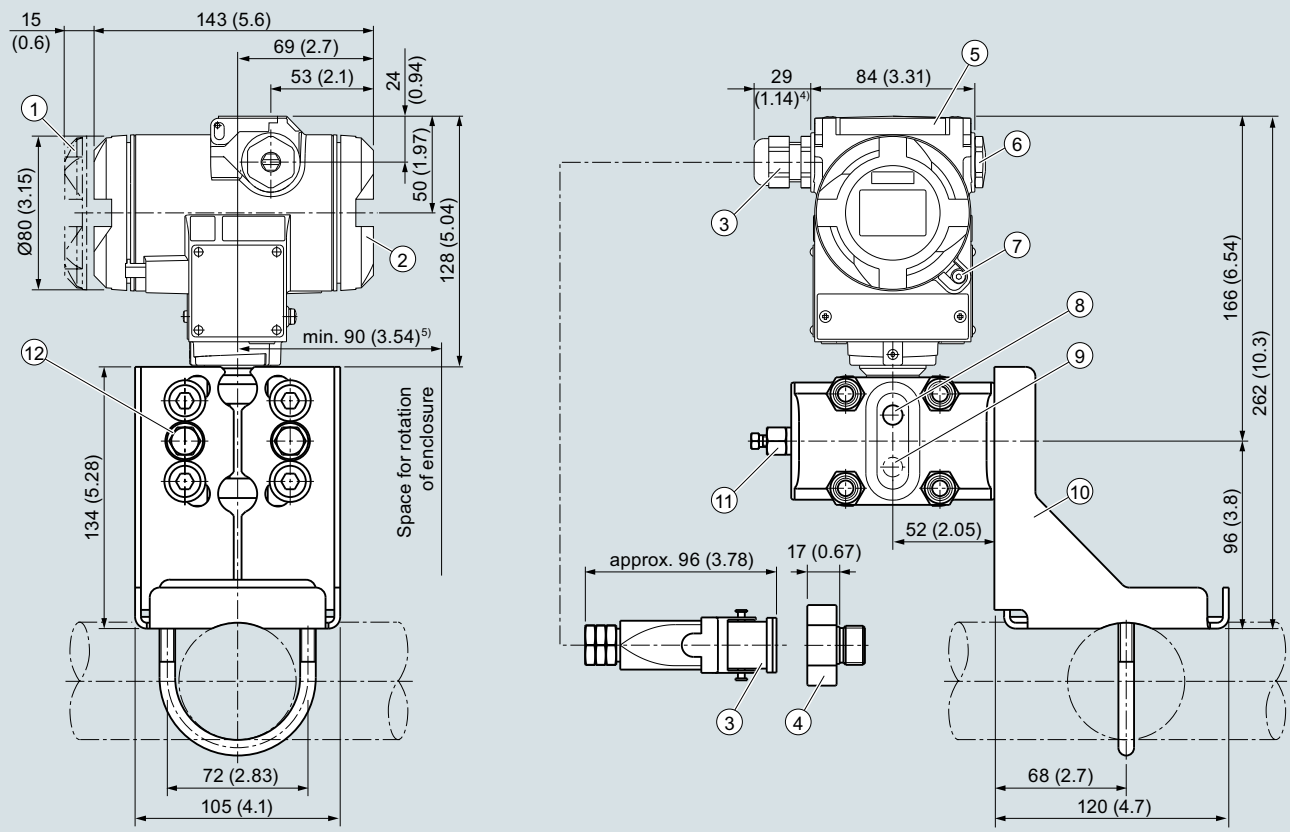

1. Electronics side, local display (longer overall length for cover with inspection window)[1]
2. Connection side[1]
3. Electrical connection:
   - Pg 13.5 screw gland (adapter)[2] [3]
   - M20 x 1,5 screw gland
   - ½-14 NPT screw gland
   - Han 7D/Han 8D[2] [3] device plug
4. Harting adapter
5. Cover over buttons
6. Blanking plug
7. Safety catch (only for "flameproof enclosure" type of protection; not shown in the drawing)
8. Lateral ventilation for liquid measurement (Standard)
9. Lateral ventilation for gas measurement (order option H02)
10. Mounting bracket (optional)
11. Sealing plug with valve (optional)
12. Process connection: ¼-18 NPT (IEC 61518)

[1] In addition, allow approx. 20 mm (0.79 inch) for the thread length
[2] Not with "flameproof enclosure" type of protection
[3] Not for type of protection "FM + CSA" [is + XP]"
[4] For Pg 13.5 with adapter, approx. 45 mm (1.77 inch)
[5] 92 mm (3.62 inch) minimum distance for rotating with indicator

SITRANS P DS III pressure transmitters for absolute pressure, from the differential pressure series, dimensions in mm (inch)

© Siemens 2020

Technical specifications

SITRANS P, DS III for differential pressure and flow

Input

Measured variable	Differential pressure and flow		
Measuring span (infinitely adjustable) or nominal measuring range and maximum operating pressure (pursuant to 2014/68/EU Pressure Equipment Directive)	**HART**	**PROFIBUS PA/ FOUNDATION Fieldbus**	
	Measuring span	Nominal measuring range	Max. operating pressure MAWP (PS)
	1 ... 20 mbar 0.1 ... 2 kPa 0.4 ... 8 inH_2O	20 mbar 2 kPa 8 inH_2O	32 bar 3.2 MPa 464 psi
	1 ... 60 mbar 0.1 ... 6 kPa 0.4 ... 24 inH_2O	60 mbar 6 kPa 24.1 inH_2O	160 bar 16 MPa 2320 psi
	2.5 ... 250 mbar 0.2 ... 25 kPa 1 ... 100 inH_2O	250 mbar 25 kPa 100 inH_2O	
	6 ... 600 mbar 0.6 ...60 kPa 2.4 ... 240 inH_2O	600 mbar 60 kPa 240 inH_2O	
	16 ... 1600 mbar 1.6 ...160 kPa 6.4 ... 642 inH_2O	1600 mbar 160 kPa 642 inH_2O	
	50 ... 5000 mbar 5 ...500 kPa 20 ... 2000 inH_2O	5000 mbar 500 kPa 2000 inH_2O	
	0.3 ... 30 bar 0.03 ... 3 MPa 4.35 ... 435 psi	30 bar 3 MPa 435 psi	
	2.5 ... 250 mbar 0.2 ... 25 kPa 1 ... 100 inH_2O	250 mbar 25 kPa 100 inH_2O	420 bar 42 MPa 6091 psi (500 bar/50 MPa/7250 psi can be ordered optionally with Order Code D56)
	6 ... 600 mbar 0.6 ...60 kPa 2.4 ... 240 inH_2O	600 mbar 60 kPa 240 inH_2O	
	16 ... 1600 mbar 1.6 ...160 kPa 6.4 ... 642 inH_2O	1600 mbar 160 kPa 642 inH_2O	
	50 ... 5000 mbar 5 ...500 kPa 20 ... 2000 inH_2O	5000 mbar 500 kPa 2000 inH_2O	
	0.3 ... 30 bar 0.03 ... 3 MPa 4.35 ... 435 psi	30 bar 3 MPa 435 psi	
Lower measuring limit			
• Measuring cell with silicone oil filling	-100 % of max. measuring span (-33 % with measuring cell 30 bar/3 MPa/435 psi) or 30 mbar a/3 kPa a/0.44 psi a		
• Measuring cell with inert filling liquid			
- for temperature of medium -20 °C < ϑ ≤ +60 °C (-4 °F < ϑ ≤ +140 °F)	-100 % of max. measuring span (-33 % with measuring cell 30 bar/3 MPa/435 psi) or 30 mbar a/3 kPa a/0.44 psi a		
- for temperature of medium 60 °C < ϑ ≤ +100 °C (max. 85 °C for measuring cell 30 bar) (140 °F < ϑ ≤ +212 °F (max. 185 °F for measuring cell 435 psi))	30 mbar a + 20 mbar a · (ϑ - 60 °C)/°C 3 kPa a + 2 kPa a · (ϑ - 60 °C)/°C 0.44 psi a + 0.29 psi a · (ϑ - 140 °F)/°F		
Upper measuring limit	100 % of max. measuring span (for oxygen measurement max. 100 bar/10 MPa/1450 psi and 60 °C (140 °F) ambient temperature/temperature of medium)		
Lower range value	Between the measuring limits (fully adjustable)		

© Siemens 2020

SITRANS P, DS III for differential pressure and flow		
Output	**HART**	**PROFIBUS PA/FOUNDATION Fieldbus**
Output signal	4 ... 20 mA	Digital PROFIBUS PA and FOUNDATION Fieldbus signal
• Lower limit (infinitely adjustable)	3.55 mA, factory preset to 3.84 mA	-
• Upper limit (infinitely adjustable)	23 mA, factory preset to 20.5 mA or optionally set to 22.0 mA (with order code D05)	-
Load		
• Without HART	$R_B \leq (U_H - 10.5\ V)/0.023\ A$ in Ω, U_H: Power supply in V	-
• With HART	R_B = 230 ... 500 Ω (SIMATIC PDM) or R_B = 230 ... 1100 Ω (HART Communicator)	-
Physical bus	-	IEC 61158-2
Protection against polarity reversal	Protected against short-circuit and polarity reversal. Each connection against the other with max. supply voltage.	
Electrical damping (step width 0.1 s)	Set to 2 s (0 ... 100 s)	
Measuring accuracy	Acc. to IEC 60770-1	
Reference conditions (All error data refer always refer to the set span)	• Increasing characteristic • Lower range value 0 bar/kPa/psi • Stainless steel seal diaphragm • Silicone oil filling • Room temperature 25 °C (77 °F)	
Measuring span ratio r (spread, Turn-Down)	r = max. measuring span/set measuring span or nominal measuring range	
Error in measurement at limit setting incl. hysteresis and reproducibility		
• Linear characteristic		
- 20 mbar/2 kPa/0.29 psi	r ≤ 5 : 5 < r ≤ 10 : 10 < r ≤ 20 :	≤ 0.075 % ≤ (0.0029 · r + 0.071) % ≤ (0.0045 · r + 0.071) %
- 60 mbar/6 kPa/0.87 psi	r ≤ 5 : 5 < r ≤ 60 :	≤ 0.075 % ≤ (0.005 · r + 0.05) %
- 250 mbar/25 kPa/3.63 psi 600 mbar/60 kPa/8.7 psi 1600 mbar/160 kPa/23.21 psi 5 bar/500 kPa/72.5 psi 30 bar/3 MPa/435 psi	r ≤ 5 : 5 < r ≤ 100 :	≤ 0.065 % ≤ (0.004 · r + 0.045) %
• Square-rooted characteristic (flow > 50 %)		
- 20 mbar/2 kPa/0.29 psi	r ≤ 5 : 5 < r ≤ 10 : 10 < r ≤ 20 :	≤ 0.075 % ≤ (0.0029 · r + 0.071) % ≤ (0.0045 · r + 0.071) %
- 60 mbar/6 kPa/0.87 psi	r ≤ 5 : 5 < r ≤ 60 :	≤ 0.075 % ≤ (0.005 · r + 0.05) %
- 250 mbar/25 kPa/3.63 psi 600 mbar/60 kPa/8.7 psi 1600 mbar/160 kPa/23.21 psi 5 bar/500 kPa/72.5 psi 30 bar/3 MPa/435 psi	r ≤ 5 : 5 < r ≤ 100 :	≤ 0.065 % ≤ (0.004 · r + 0.045) %
• Square-rooted characteristic (flow > 25 ... 50 %)		
- 20 mbar/2 kPa/0.29 psi	r ≤ 5 : 5 < r ≤ 10 : 10 < r ≤ 20 :	≤ 0.15 % ≤ (0.0058 · r + 0.142) % ≤ (0.009 · r + 0.142) %
- 60 mbar/6 kPa/0.87 psi	r ≤ 5 : 5 < r ≤ 60 :	≤ 0.015 % ≤ (0.01 · r + 0.1) %
- 250 mbar/25 kPa/3.63 psi 600 mbar/60 kPa/8.7 psi 1600 mbar/160 kPa/23.21 psi 5 bar/500 kPa/72.5 psi 30 bar/3 MPa/435 psi	r ≤ 5 : 5 < r ≤ 100 :	≤ 0.13 % ≤ (0.008 · r + 0.09) %

© Siemens 2020

SITRANS P, DS III for differential pressure and flow	
Measuring accuracy (continued)	Acc. IEC 60770-1
Influence of ambient temperature (in percent per 28 °C (50 °F))	
• 20 mbar/2 kPa/0.29 psi	≤ (0.15 · r + 0.1) %
• 60 mbar/6 kPa/0.87 psi	≤ (0.075 · r + 0.1) %
• 250 mbar/25 kPa/3.63 psi 600 mbar/60 kPa/8.7 psi 1600 mbar/160 kPa/23.21 psi 5 bar/500 kPa/72.5 psi 30 bar/3 MPa/435 psi	≤ (0.025 · r + 0.125) %
Influence of static pressure	
• on the lower range value	
- 20 mbar/2 kPa/0.29 psi	≤ (0.15 · r) % per 32 bar (zero offset is possible with position error adjustment)
- 60 mbar/6 kPa/0.87 psi 250 mbar/25 kPa/3.63 psi 600 mbar/60 kPa/8.7 psi 1600 mbar/160 kPa/23.21 psi	≤ (0.1 · r) % per 70 bar (zero offset is possible with position error adjustment)
- 5 bar/500 kPa/72.5 psi 30 bar/3 MPa/435 psi	≤ (0.2 · r) % per 70 bar (zero offset is possible with position error adjustment)
• on the measuring span	
- 20 mbar/2 kPa/0.29 psi	≤ 0.2 % per 32 bar
- 60 mbar/6 kPa/0.87 psi 250 mbar/25 kPa/3.63 psi 600 mbar/60 kPa/8.7 psi 1600 mbar/160 kPa/23.21 psi 5 bar/500 kPa/72.5 psi 30 bar/3 MPa/435 psi	≤ 0.14 % per 70 bar
Long-term stability (temperature change ± 30 °C (± 54 °F))	Static pressure max. 70 bar/7 MPa/ 1015 psi
• 20 mbar/2 kPa/0.29 psi	≤ (0.2 · r) % per year
• 60 mbar/6 kPa/0.87 psi 30 bar/3 MPa/435 psi	≤ (0.25 · r) % in 5 years
• 250 mbar/25 kPa/3.63 psi 600 mbar/60 kPa/8.7 psi 1600 mbar/160 kPa/23.21 psi 5 bar/500 kPa/72.5 psi	≤ (0.125 · r) % in 5 years
Effect of mounting position (in pressure per change in angle)	≤ 0.7 mbar/0.07 kPa/0.028 inH_2O per 10° inclination (zero offset is possible with position error adjustment)
Effect of auxiliary power supply (in percent per change in voltage)	0.005 % per 1 V
Measuring value resolution for PROFIBUS PA and FOUNDATION Fieldbus	$3 \cdot 10^{-5}$ of nominal measuring range

© Siemens 2020

SITRANS P, DS III for differential pressure and flow		
Operating conditions		
Degree of protection		
• according to EN 60529	IP66 (optional IP66/IP68)	
• according to NEMA 250	Type 4X	
Temperature of medium		
• Measuring cell with silicone oil filling	-40 ... +100 °C (-40 ... +212 °F) -20 ... +100 °C (-4 ... +212 °F) with 30 bar measuring cell	
• Measuring cell with inert filling liquid	-20 ... +100 °C (-4 ... +212 °F)	
• Measuring cell with Neobee fill fluid (FDA-compliant)	-10 ... +100 °C (+14 ... +212 °F)	
• In conjunction with dust explosion protection	-20 ... +60 °C (-4 ... +140 °F)	
Ambient conditions		
• Ambient temperature (silicone oil and inert oil)		
- Transmitter	-40 ... +85 °C (-40 ... +185 °F) -20 ... +85 °C (-4 ... +185 °F) with 30 bar measuring cell	
- Display readable	-30 ... +85 °C (-22 ... +185 °F)	
• Ambient temperature (Neobee fill fluid)		
- Transmitter	-10 ... +85 °C (+14 ... +185 °F)	
• Storage temperature	-50 ... +85 °C (-58 ... +185 °F)	
• Climatic class		
- Condensation	Relative humidity 0 ... 100 % Condensation permissible, suitable for use in the tropics	
• Electromagnetic Compatibility		
- Emitted interference and interference immunity	Acc. to IEC 61326 and NAMUR NE 21	
Design		
Weight (without options)	Die-cast aluminum: ≈ 4.5 kg (≈ 9.9 lb) Stainless steel precision casting: ≈ 7.1 kg (≈ 15.6 lb)	
Enclosure material	Low-copper die-cast aluminum, GD-AlSi12 or stainless steel precision casting, mat. no. 1.4408	
Wetted parts materials		
• Seal diaphragm	Stainless steel, mat. no. 1.4404/316L or Hastelloy C276, mat. no. 2.4819, Monel, mat. no. 2.4360, tantalum or gold	
• Process flanges and sealing screw	Stainless steel, mat. no. 1.4408, Hastelloy C4, mat. no. 2.4602 or Monel, mat. no. 2.4360	
• O-Ring	FPM (Viton) or optionally: PTFE, FEP, FEPM and NBR	
Measuring cell filling	Silicone oil or inert filling liquid (maximum value with oxygen measurement pressure 100 bar (1450 psi) at 60 °C (140 °F))	
Process connection	Female thread ¼-18 NPT and flange connection with mounting thread M10 to DIN 19213 or $^{7}/_{16}$-20 UNF to IEC 61518/DIN EN 61518	
Material of mounting bracket		
• Steel	Sheet-steel, Mat. No. 1.0330, chrome-plated	
• Stainless steel 304	Sheet stainless steel, mat. no. 1.4301 (SS 304)	
• Stainless steel 316L	Sheet stainless steel, mat. no. 1.4404 (SS 316L)	
Power supply U_H	**HART**	**PROFIBUS PA/ FOUNDATION Fieldbus**
Terminal voltage on transmitter	10.5 ... 45 V DC 10.5 ... 30 V DC in intrinsically-safe mode	-
Power supply	-	Supplied through bus
Separate supply voltage	-	No
Bus voltage		
• Not Ex	-	9 ... 32 V
• With intrinsically-safe operation	-	9 ... 24 V
Current consumption		
• Basic current (max.)	-	12.5 mA
• Start-up current ≤ basic current	-	Yes
• Max. current in event of fault	-	15.5 mA
Fault disconnection electronics (FDE) available	-	Yes

© Siemens 2020

SITRANS P, DS III for differential pressure and flow		
Certificates and approvals	**HART**	**PROFIBUS PA/ FOUNDATION Fieldbus**
Classification according to PED 2014/68/EU	• PN 32/160 (MAWP 464/2320 psi) for gases of fluid group 1 and liquids of fluid group 1; complies with requirements of article 4, paragraph 3 (sound engineering practice) • PN 420 (MAWP 6092) for gases of fluid group 1 and liquids of fluid group 1; complies with basic safety requirements of Article 4, paragraph 1 (appendix 1); assigned to category III, conformity evaluation module H by the TÜV Nord.	
Explosion protection		
• Intrinsic safety "i"	PTB 13 ATEX 2007 X	
- Marking	Ex II 1/2 G Ex ia/ib IIC T4/T5/T6 Ga/Gb	
- Permissible ambient temperature	-40 ... +85 °C (-40 ... +185 °F) temperature class T4; -40 ... +70 °C (-40 ... +158 °F) temperature class T5; -40 ... +60 °C (-40 ... +140 °F) temperature class T6	
- Connection	To certified intrinsically-safe circuits with peak values: U_i = 30 V, I_i = 100 mA, P_i = 750 mW; R_i = 300 Ω	FISCO supply unit: U_o = 17.5 V, I_o = 380 mA, P_o = 5.32 W Linear barrier: U_o = 24 V, I_o = 250 mA, P_o = 1.2 W
- Effective internal inductance/capacitance	L_i = 0.4 mH, C_i = 6 nF	L_i = 7 µH, C_i = 1.1 nF
• Explosion-proof "d"	PTB 99 ATEX 1160	
- Marking	Ex II 1/2 G Ex d IIC T4/T6 Gb	
- Permissible ambient temperature	-40 ... +85 °C (-40 ... +185 °F) temperature class T4; -40 ... +60 °C (-40 ... +140 °F) temperature class T6	
- Connection	To circuits with values: U_H = 10.5 ... 45 V DC	To circuits with values: U_H = 9 ... 32 V DC
• Dust explosion protection for zone 20	PTB 01 ATEX 2055	
- Marking	Ex II 1 D Ex ta IIIC T120°C Da Ex II 1/2 D Ex ta/tb IIIC T120°C Da/Db	
- Permissible ambient temperature	-40 ... +85 °C (-40 ... +185 °F)	
- Max. surface temperature	120 °C (248 °F)	
- Connection	To certified intrinsically-safe circuits with peak values: U_i = 30 V, I_i = 100 mA, P_i = 750 mW, R_i = 300 Ω	FISCO supply unit: U_o = 17.5 V, I_o = 380 mA, P_o = 5.32 W Linear barrier: U_o = 24 V, I_o = 250 mA, P_o = 1 W
- Effective internal inductance/capacitance	L_i = 0.4 mH, C_i = 6 nF	L_i = 7 µH, C_i = 1.1 nF
• Dust explosion protection for zone 21/22	PTB 01 ATEX 2055	
- Marking	Ex II 2 D Ex tb IIIC T120°C Db	
- Connection	To circuits with values: U_H = 10.5 ... 45 V DC; P_{max} = 1.2 W	To circuits with values: U_H = 9 ... 32 V DC; P_{max} = 1 W
• Type of protection "n" (zone 2)	PTB 13 ATEX 2007 X	
- Marking	Ex II 2/3 G Ex nA IIC T4/T5/T6 Gb/Gc Ex II 2/3 G Ex ic IIC T4/T5/T6 Gb/Gc	
- Connection (Ex nA)	U_m = 45 V	U_m = 32 V
- Connection (Ex ic)	To circuits with values: U_i = 45 V	FISCO supply unit ic: U_o = 17.5 V, I_o = 570 mA Linear barrier: U_o = 32 V, I_o = 132 mA, P_o = 1 W
- Effective internal inductance/capacitance	L_i = 0.4 mH, C_i = 6 nF	L_i = 7 µH, C_i = 1.1 nF
• Explosion protection acc. to FM	Certificate of Compliance 3008490	
- Identification (XP/DIP) or (IS); (NI)	CL I, DIV 1, GP ABCD T4...T6; CL II, DIV 1, GP EFG; CL III; CL I, ZN 0/1 AEx ia IIC T4...T6; CL I, DIV 2, GP ABCD T4...T6; CL II, DIV 2, GP FG; CL III	
• Explosion protection to CSA	Certificate of Compliance 1153651	
- Identification (XP/DIP) or (IS)	CL I, DIV 1, GP ABCD T4...T6; CL II, DIV 1, GP EFG; CL III; Ex ia IIC T4...T6; CL I, DIV 2, GP ABCD T4...T6; CL II, DIV 2, GP FG; CL III	

© Siemens 2020

HART communication	
HART	230 ... 1100 Ω
Protocol	HART Version 5.x
Software for PC	SIMATIC PDM
PROFIBUS PA communication	
Simultaneous communication with master class 2 (max.)	4
The address can be set using	Configuration tool or local operation (standard setting address 126)
Cyclic data usage	
• Output byte	5 (one measured value) or 10 (two measured values)
• Input byte	0, 1, or 2 (register operating mode and reset function for metering)
Internal preprocessing	
Device profile	PROFIBUS PA Profile for Process Control Devices Version 3.0, class B
Function blocks	2
• Analog input	
- Adaptation to customer-specific process variables	Yes, linearly rising or falling characteristic
- Electrical damping, adjustable	0 ... 100 s
- Simulation function	Input /Output
- Failure mode	parameterizable (last good value, substitute value, incorrect value)
- Limit monitoring	Yes, one upper and lower warning limit and one alarm limit respectively
• Register (totalizer)	Can be reset, preset, optional direction of counting, simulation function of register output
- Failure mode	parameterizable (summation with last good value, continuous summation, summation with incorrect value)
- Limit monitoring	One upper and lower warning limit and one alarm limit respectively
• Physical block	1
Transducer blocks	2
• Pressure transducer block	
- Can be calibrated by applying two pressures	Yes
- Monitoring of sensor limits	Yes
- Specification of a container characteristic with	Max. 30 nodes
- Square-rooted characteristic for flow measurement	Yes
- Gradual volume suppression and implementation point of square-root extraction	Parameterizable
- Simulation function for measured pressure value and sensor temperature	Constant value or over parameterizable ramp function

FOUNDATION Fieldbus communication	
Function blocks	3 function blocks analog input, 1 function block PID
• Analog input	
- Adaptation to customer-specific process variables	Yes, linearly rising or falling characteristic
- Electrical damping, adjustable	0 ... 100 s
- Simulation function	Output/input (can be locked within the device with a bridge)
- Failure mode	parameterizable (last good value, substitute value, incorrect value)
- Limit monitoring	Yes, one upper and lower warning limit and one alarm limit respectively
- Square-rooted characteristic for flow measurement	Yes
• PID	Standard FOUNDATION Fieldbus function block
• Physical block	1 resource block
Transducer blocks	1 transducer block Pressure with calibration, 1 transducer block LCD
• Pressure transducer block	
- Can be calibrated by applying two pressures	Yes
- Monitoring of sensor limits	Yes
- Simulation function: Measured pressure value, sensor temperature and electronics temperature	Constant value or over parameterizable ramp function

© Siemens 2020

Selection and Ordering data		Article No.
SITRANS P DS III with HART pressure transmitters for differential pressure and flow, PN 32/160 (MAWP 464/2320 psi)		↗ 7MF4433 - ■■■■ - ■■■■
↗ Click on the Article No. for the online configuration in the PIA Life Cycle Portal.		
Measuring cell filling	**Measuring cell cleaning**	
Silicone oil	normal	1
Inert liquid[1]	grease-free to cleanliness level 2	3
FDA compliant fill fluid [2]		
• Neobee oil	normal	4
Measuring span (min. ... max.)		
PN 32 (MAWP 464 psi)		
1 ... 20 mbar[3]	(0.4 ... 8 inH_2O)	B
PN 160 (MAWP 2320 psi)		
1 ... 60 mbar	(0.4 ... 24 inH_2O)	C
2.5 ... 250 mbar	(1.004 ... 100.4 inH_2O)	D
6 ... 600 mbar	(2.4 ... 240 inH_2O)	E
16 ... 1600 mbar	(6.4 ... 642 inH_2O)	F
50 ... 5000 mbar	(20 ... 2000 inH_2O)	G
0.3 ... 30 bar	(4.35 ... 435 psi)	H
Wetted parts materials		
(stainless steel process flanges)		
Seal diaphragm	Parts of measuring cell	
Stainless steel	Stainless steel	A
Hastelloy	Stainless steel	B
Hastelloy	Hastelloy	C
Tantalum[4]	Tantalum	E
Monel[4]	Monel	H
Gold[4]	Gold	L
Version for diaphragm seal[5) 6) 7) 8)]		Y
Process connection		
Female thread ¼-18 NPT with flange connection		
• Sealing screw opposite process connection		
- Mounting thread $^7/_{16}$-20 UNF to IEC 61518/DIN EN 61518		2
- Mounting thread M10 to DIN 19213 (only for replacement requirement)		0
• Vent on side of process flange [3]		
- Mounting thread $^7/_{16}$-20 UNF to IEC 61518/DIN EN 61518		6
- Mounting thread M10 to DIN 19213 (only for replacement requirement)		4
Non-wetted parts materials		
process flange screws	Electronics enclosure	
Stainless steel	Die-cast aluminum	2
Stainless steel	Stainless steel precision casting[9]	3
Version		
• Standard version, German plate inscription, setting for pressure unit: bar		1
• International version, English plate inscription, setting for pressure unit: bar		2
• Chinese version, English plate inscription, setting for pressure unit: Pascal		3
All versions include DVD with compact operating instructions in various EU languages.		

Selection and Ordering data	Article No.
SITRANS P DS III with HART pressure transmitters for differential pressure and flow, PN 32/160 (MAWP 464/2320 psi)	7MF4433 - ■■■■ - ■■■■
Explosion protection	
• None	A
• With ATEX, Type of protection:	
- "Intrinsic safety (Ex ia)"	B
- "Explosion-proof (Ex d)"[10]	D
- "Intrinsic safety and flameproof enclosure" (Ex ia + Ex d)"[11]	P
- "Ex nA/ic (Zone 2)"[12]	E
- "Intrinsic safety, explosion-proof enclosure and dust explosion protection (Ex ia+ Ex d + Zone 1D/2D)"[11)13)]	R
• FM + CSA intrinsic safe (is)[14]	F
• FM + CSA (is + ep) + Ex ia + Ex d (ATEX) + Zone 1D/2D[11)13)14)]	S
• With FM + CSA, Type of protection:	
- "Intrinsic Safe and Explosion Proof (is + xp)"[10)14)]	N C
Electrical connection/cable entry	
• Screwed gland M20 x 1.5	B
• Screwed gland ½-14 NPT	C
• Device plug Han 7D (plastic enclosure) incl. mating connector[15)16)]	D
• Device plugs M12 (stainless steel)[17)18)]	F
Display	
• Without display	0
• Without visible display (display concealed, setting: mA)	1
• With visible display (setting: mA)	6
• with customer-specific display (setting as specified, Order code "Y21" or "Y22" required)	7

Power supply units see Chap. 7 "Supplementary Components".

Included in delivery of the device:
- Quick-start guide
- Sealing plug(s) or sealing screw(s) for the process flanges(s)

1) For oxygen application, add Order code E10.
2) Available for measuring ranges 250 mbar ... 5 bar.
3) Not suitable for connection of remote seal. Position of the top vent valve in the process flange (see dimensional drawing).
4) Not in conjunction with max. measuring span 20 and 60 mbar (8.03 and 24.09 inH_2O))
5) When also ordering the quality test certificate (factory calibration) according to IEC 60770-2 for transmitters with mounted diaphragm seals: Order this certificate only together with the remote seals. The measuring accuracy of the total combination is certified here.
6) If the inspection certificate 3.1.is ordered for the transmitter with mounted diaphragm seals this certificate must also be ordered with the respective remote seals.
7) The diaphragm seal is to be specified with a separate order number and must be included wiht the transmitter order number, for example 7MF443.-..Y..-.... and 7MF4900-1...-.B
8) The standard measuring cell filling for configurations with remote seals (Y) is silicone oil.
9) Not in conjunction with Electrical connection "device plug Han 7D".
10) Without cable gland, with blanking plug
11) With enclosed cable gland Ex ia and blanking plug
12) Configurations with device plugs Han and M12 are only available in Ex ic.
13) Only in connection with IP66.
14) Explosion protection acc. to FM/CSA: suitable for installations according to NEC 500/505.
15) Only in connection with Ex apporval A, B or E.
16) Permissible only for crimp-contact of conductor cross-section 1 mm^2
17) Only in connection with Ex approval A, B, E or F.
18) M12 delivered without cable socket.

© Siemens 2020

Selection and Ordering data

	Article No.
Pressure transmitters for differential pressure and flow PN 32/160 (MAWP 464/2320 psi)	
SITRANS P DS III with PROFIBUS PA (PA) ↗	**7MF4434-**
SITRANS P DS III with FOUNDATION Fieldbus (FF) ↗	**7MF4435-**
↗ Click on the Article No. for the online configuration in the PIA Life Cycle Portal.	■■■■■-■■■■

Measuring cell filling	**Measuring cell cleaning**	
Silicone oil	normal	**1**
Inert liquid[1]	grease-free to cleanliness level 2	**3**
FDA compliant fill fluid [2]		
• Neobee oil	normal	**4**
Nominal measuring range		
PN 32 (MAWP 464 psi)		
20 mbar [3]	(8.03 inH_2O)	**B**
PN 160 (MAWP 2320 psi)		
60 mbar	(24 inH_2O)	**C**
250 mbar	(100 inH_2O)	**D**
600 mbar	(240 inH_2O)	**E**
1600 mbar	(642 inH_2O)	**F**
5 bar	(2000 inH_2O)	**G**
30 bar	(435 psi)	**H**
Wetted parts materials		
(stainless steel process flanges)		
Seal diaphragm	Parts of measuring cell	
Stainless steel	Stainless steel	**A**
Hastelloy	Stainless steel	**B**
Hastelloy	Hastelloy	**C**
Tantalum [4]	Tantalum	**E**
Monel[4]	Monel	**H**
Gold [4]	Gold	**L**
Version as diaphragm seal [5] [6] [7] [8]		**Y**
Process connection		
Female thread ¼-18 NPT with flange connection		
• Sealing screw opposite process connection		
- Mounting thread $^7/_{16}$-20 UNF to IEC 61518/DIN EN 61518		**2**
- Mounting thread M10 to DIN 19213 (only for replacement requirement)		**0**
• Venting on side of process flanges[3]		
- Mounting thread $^7/_{16}$-20 UNF to IEC 61518/DIN EN 61518		**6**
- Mounting thread M10 to DIN 19213 (only for replacement requirement)		**4**
Non-wetted parts materials		
process flange screws	Electronics enclosure	
Stainless steel	Die-cast aluminum	**2**
Stainless steel	Stainless steel precision casting	**3**
Version		
• Standard versions		**1**
• International version, English label inscriptions, documentation in 5 languages on DVD (no Order code selectable)		**2**
Version		
• Standard version, German plate inscription, setting for pressure unit: bar		**1**
• International version, English plate inscription, setting for pressure unit: bar		**2**
• Chinese version, English plate inscription, setting for pressure unit: Pascal		**3**

All versions include DVD with compact operating instructions in various EU languages.

Selection and Ordering data

	Article No.
Pressure transmitters for differential pressure and flow PN 32/160 (MAWP 464/2320 psi)	
SITRANS P DS III with PROFIBUS PA (PA)	**7MF4434-**
SITRANS P DS III with FOUNDATION Fieldbus (FF)	**7MF4435-**
	■■■■■-■■■■
Explosion protection	
• None	**A**
• With ATEX, Type of protection:	
- "Intrinsic safety (Ex ia)"	**B**
- "Explosion-proof (Ex d)"[9]	**D**
- "Intrinsic safety and flameproof enclosure" (Ex ia + Ex d)"[10]	**P**
- "Ex nA/ic (Zone 2)" [11]	**E**
- "Intrinsic safety, explosion-proof enclosure and dust explosion protection (Ex ia + Ex d + Zone 1D/2D)"[10][12]	**R**
• FM + CSA intrinsic safe (is)[13]	**F**
• FM + CSA (is + ep) + Ex ia + Ex d (ATEX)+ Zone 1D/2D[10][12][13]	**S**
• With FM + CSA, Type of protection:	
- "Intrinsic Safe and Explosion Proof (is + xp)"[9][13]	**N C**
Electrical connection/cable entry	
• Screwed gland M20 x 1.5	**B**
• Screwed gland ½-14 NPT	**C**
• Device plugs M12 (stainless steel)[14] [15]	**F**
Display	
• Without display	**0**
• Without visible display (display concealed, setting: bar)	**1**
• With visible display (setting: bar)	**6**
• With customer-specific display (setting as specified, Order code "Y21" required)	**7**

Included in delivery of the device:
- Quick-start guide
- Sealing plug(s) or sealing screw(s) for the process flanges(s)

1) For oxygen application, add Order code E10.
2) Available for measuring ranges 250 mbar ... 5 bar.
3) Not suitable for connection of remote seal. Position of the top vent valve in the process flange (see dimensional drawing).
4) Not in conjunction with max. measuring span 20 and 60 mbar (8.03 and 24.09 inH_2O))
5) When the manufacture's certificate (calibration certificate) has to be ordered for transmitters with diaphragm seals according to IEC 60770-2, it is recommended only to order this certificate exclusively with the diaphragm seals. The measuring accuracy of the total combination is certified here.
6) If the inspection certificate 3.1.is ordered for the transmitter with mounted diaphragm seals this certificate must also be ordered with the respective remote seals.
7) The diaphragm seal is to be specified with a separate order number and must be included wiht the transmitter order number, for example 7MF443.-..Y..-.... and 7MF4900-1...-.B
8) The standard measuring cell filling for configurations with remote seals (Y) is silicone oil.
9) Without cable gland, with blanking plug.
10) With enclosed cable gland Ex ia and blanking plug.
11) Configurations with device plugs Han and M12 are only available in Ex ic.
12) Only in connection with IP66.
13) Explosion protection acc. to FM/CSA: suitable for installations according to NEC 500/505.
14) Only in connection with Ex approval A, B, E or F.
15) M12 delivered without cable socket

© Siemens 2020

Selection and Ordering data	Order code	HART	PA	FF
Further designs Add "**-Z**" to Article No. and specify Order code.				
Pressure transmitter with mounting bracket (1x fixing angle, 2 x nut, 2 x U-washer or 1 x bracket, 2 x nut, 2 x U-washer) made of:				
• Steel	**A01**	✓	✓	✓
• Stainless steel 304	**A02**	✓	✓	✓
• Stainless steel 316L	**A03**	✓	✓	✓
O-rings for process flanges (instead of FPM (Viton))				
• PTFE (Teflon)	**A20**	✓	✓	✓
• FEP (with silicone core, approved for food)	**A21**	✓	✓	✓
• FFPM (Kalrez, for measured medium temperatures -15 ... 100 °C (5 ... 212 °F))	**A22**	✓	✓	✓
• NBR (Buna N)	**A23**	✓	✓	✓
Device plugs[1)]				
• Han 7D (metal)	**A30**	✓		
• Han 8D (instead of Han 7D)	**A31**	✓		
• Angled	**A32**	✓		
• Han 8D (metal)	**A33**	✓		
Sealing screws (2 units) ¼-18 NPT, with vent valve in mat. of process flanges	**A40**	✓	✓	✓
Cable sockets for device plugs M12 (metal (CuZn))	**A50**	✓	✓	✓
Rating plate inscription (instead of German)				
• English	**B11**	✓	✓	✓
• French	**B12**	✓	✓	✓
• Spanish	**B13**	✓	✓	✓
• Italian	**B14**	✓	✓	✓
• Cyrillic (russian)	**B16**	✓	✓	✓
English rating plate Pressure units in inH_2O and/or psi	**B21**	✓	✓	✓
Quality test certificate, 5-point factory calibration (IEC 60770-2)[2)]	**C11**	✓	✓	✓
Inspection certificate[3)] to EN 10204-3.1	**C12**	✓	✓	✓
Factory certificate to EN 10204-2.2	**C14**	✓	✓	✓
Inspection certificate (EN 10204-3.1) PMI test of parts in contact with medium	**C15**	✓	✓	✓
Functional safety (SIL2) Devices suitable for use according to IEC 61508 and IEC 61511. Includes SIL conformity declaration	**C20**	✓		
Functional safety (PROFIsafe) Certificate and PROFIsafe protocol	**C21**[4)]		✓	
Functional safety (SIL2/3) Devices suitable for use according to IEC 61508 and IEC 61511. Includes SIL conformity declaration	**C23**	✓		
PED for Russia with initial calibration mark	**C99**	✓	✓	✓

Selection and Ordering data	Order code	HART	PA	FF
Further designs Add "**-Z**" to Article No. and specify Order code.				
Setting of the upper saturation limit of the output signal to 22.0 mA	**D05**	✓		
Manufacturer's declaration acc. to NACE (MR 0103-2012 and MR 0175-2009) (only together with seal diaphragm made of Hastelloy and stainless steel)	**D07**	✓	✓	✓
Degree of protection IP66/IP68 (only for M20 x 1.5 and ½-14 NPT)	**D12**	✓	✓	✓
Process flange screws made of Monel (max. nominal pressure PN20)	**D34**	✓	✓	✓
Supplied with oval flange set (2 items), PTFE packings and screws in thread of process flanges	**D37**	✓	✓	✓
Capri cable gland 4F CrNi and clamping device (848699 + 810634) included	**D59**	✓	✓	✓
Use in or on zone 1D/2D[5)] (only together with type of protection "Intrinsic safety" (transmitter 7MF4...-.....-.B.. Ex ia)"and IP66)	**E01**	✓	✓	✓
Overfilling safety device for flammable and non-flammable liquids (max. PN 32 (MAWP 464 psi), basic device with type of protection "Intrinsic safety (Ex ia)", to WHG and VbF, not together with measuring cell filling "inert liquid")	**E08**	✓		
Oxygen application (In the case of oxygen measurement and inert liquid max. 100 bar (1450 psi) at 60°C (140 °F))	**E10**	✓	✓	✓
Export approval Korea	**E11**	✓	✓	✓
CRN approval Canada (Canadian Registration Number)	**E22**[6)]	✓	✓	✓
Dual seal	**E24**	✓	✓	✓
Explosion-proof "Intrinsic safety" (Ex ia) to INMETRO (Brazil) (only for transmitter 7MF4...-.....-.B..)	**E25**[7)]	✓	✓	✓
"Flameproof" explosion protection according to INMETRO (Brazil) (only for transmitter 7MF4...-.....-.D..)	**E26**[7)]	✓	✓	✓
Explosion-proof "Intrinsic safety" (Ex ia + Ex d) to INMETRO (Brazil) (only for transmitter 7MF4...-.....-.P..)	**E28**[7)]	✓	✓	
Ex Approval IEC Ex (Ex ia) (only for transmitter 7MF4...-.....-.B..)	**E45**[7)]	✓	✓	✓
Ex Approval IEC Ex (Ex d) (only for transmitter 7MF4...-.....-.D..)	**E46**[7)]	✓	✓	✓
Explosion-proof "Intrinsic safety" to NEPSI (China) (only for transmitter 7MF4...-.....-.B..)	**E55**[7)]	✓	✓	✓
Explosion protection "Explosion-proof" to NEPSI (China) (only for transmitter 7MF4...-.....-.D..)	**E56**[7)]	✓	✓	✓
Explosion-proof "Zone 2" to NEPSI (China) (only for transmitter 7MF4...-.....-.E..)	**E57**[7)]	✓	✓	✓
Ex protection „Ex ia", „Ex d" and „Zone 2" to NEPSI (China) (only for transmitter 7MF4...-.....-.R..)	**E58**[7)]	✓	✓	✓
"Intrinsic safety" and "Explosion-proof" explosion protection acc. to Kosha (Korea) (only for transmitter 7MF4...-.....-.[B, D]..-Z + E11)	**E70**[7)]	✓	✓	✓

© Siemens 2020

Selection and Ordering data	Order code	HART	PA	FF
Further designs Add "**-Z**" to Article No. and specify Order code.				
Ex-protection Ex ia according to EAC Ex (Russia)	**E80**	✓	✓	✓
Ex-protection Ex d according to EAC Ex (Russia)	**E81**	✓	✓	✓
Ex-protection Ex nA/ic (Zone 2) according to EAC Ex (Russia)	**E82**	✓	✓	✓
Ex-protection Ex ia + Ex d + Zone 1D/2D according to EAC Ex (Russia)	**E83**	✓	✓	✓
Two coats of lacquer on enclosure and cover (PU on epoxy)	**G10**	✓	✓	✓
Interchanging of process connection side	**H01**	✓	✓	✓
Vent on side for gas measurements	**H02**	✓	✓	✓
Stainless steel process flanges for vertical differential pressure lines (not together with K01, K02 and K04[8])	**H03**	✓	✓	✓
Transient protector 6 kV (lightning protection)	**J01**	✓	✓	✓
Chambered graphite gasket for process flange	**J02**	✓	✓	✓
Chambered PTFE graphite gasket	**J03**	✓	✓	✓
EPDM O-rings for process flange with approval (WRC/WRAS)	**J05**	✓	✓	✓
Vent valve or blanking plug of process flange welded-in (orientation: on right when viewing the display[9])	**J08**	✓	✓	✓
Vent valve or blanking plug of process flange welded-in (orientation: on left when viewing the display)[9]	**J09**	✓	✓	✓
Process flange				
• Hastelloy	**K01**	✓	✓	✓
• Monel	**K02**	✓	✓	✓
• Stainless steel with PVDF insert max. PN 10 (MAWP 145 psi), max. temperature of medium 90 °C (194 °F), for ½-14 NPT inner process connection on the side in the middle of the process flange, vent valve not possible	**K04**	✓	✓	✓
Marine approvals				
• Det Norske Veritas Germanischer Lloyd (DNV-GL)	**S10**	✓	✓	✓
• Lloyds Register (LR)	**S11**	✓	✓	✓
• French marine classification society Bureau Veritas (BV)	**S12**	✓	✓	✓
• American Bureau of Shipping (ABS)	**S14**	✓	✓	✓
• Russian Maritime Register (RMR)	**S16**	✓	✓	✓
• Korean Register of Shipping (KR)	**S17**	✓	✓	✓

Factory mounting of valve manifolds, see accessories.

✓ = available

1) Device plug Han IP65
2) When the manufacture's certificate (calibration certificate) has to be ordered for transmitters with diaphragm seals according to IEC 60770-2, it is recommended only to order this certificate exclusively with the diaphragm seals. The measuring accuracy of the total combination is certified here.
3) If the inspection certificate 3.1.is ordered for the transmitter with mounted diaphragm seals this certificate must also be ordered with the respective remote seals.
4) Profisafe transmitters can only be operated with the S7 F Systems V6.1 configuration software in combination with S7-400H
5) Option does not contain gas explosion protection; only dust explosion protection: Use in or at Zone 1D/2D.
6) Cannot be ordered with remote seal.
7) When the additional ex option is selected, the ATEX marking on the device is omitted. Only the Ex option selected via the Z option is marked.
8) Not suitable for connection of remote seal.
9) Blanking plug is standard configuration. Order option A40 if a vent valve is required instead of a blanking plug.

Selection and Ordering data	Order code	HART	PA	FF
Additional data Please add "**-Z**" to Article No. and specify Order code(s) and plain text.				
Measuring range to be set Specify in plain text:				
• in the case of linear characteristic curve (max. 5 characters): Y01: ... up to ... mbar, bar, kPa, MPa, psi	**Y01**	✓	✓[1]	
• in the case of square rooted characteristic (max. 5 characters): Y02: ... up to ... mbar, bar, kPa, MPa, psi	**Y02**	✓		
Stainless steel tag plate and entry in device variable (measuring point description) Max. 16 characters, specify in plain text: Y15:	**Y15**	✓	✓	✓
Measuring point text (entry in device variable) Max. 27 char., specify in plain text: Y16:	**Y16**	✓	✓	✓
Entry of HART address (TAG) Max. 8 char., specify in plain text: Y17:	**Y17**	✓		
Setting of pressure indicator in pressure units Specify in plain text (standard setting: bar): Y21: mbar, bar, kPa, MPa, psi, ... Note: The following pressure units can be selected: bar, mbar, mm H_2O*), inH_2O*), ftH_2O*), mmHG, inHG, psi, Pa, kPa, MPa, g/cm^2, kg/cm^2, Torr, ATM or % *) ref. temperature 20 °C	**Y21**	✓	✓	✓
Setting of pressure indicator in non-pressure units[2] Specify in plain text: Y22: ..... up to ..... l/min, m^3/h, m, USgpm, ... (specification of measuring range in pressure units "Y01" or "Y02" is essential, unit with max. 5 characters)	**Y22[3] + Y01** *or* **Y02**	✓		
Preset bus address possible between 1 and 126 Specify in plain text: Y25:	**Y25**		✓	✓
Damping adjustment in seconds (0 ... 100 s)	**Y30**	✓	✓	✓

Factory mounting of valve manifolds, see accessories.

Only Y01, Y15, Y16, Y17, Y21, Y22, Y25 and D05 can be factory preset

✓ = available

1) Measuring accuracies for PROFIBUS PA transmitters with Option Y01 are calculated in the same way as for HART devices.
2) Preset values can only be changed over SIMATIC PDM.
3) Not in conjunction with over-filling safety device for flammable and non-flammable liquids (Order code "E08")

© Siemens 2020

Selection and Ordering data		Article No.
SITRANS P DS III with HART pressure transmitters for differential pressure and flow, PN 420 (MAWP 6092 psi)		↗ 7MF4533 - ■■■■■ - ■■■■
↗ Click on the Article No. for the online configuration in the PIA Life Cycle Portal.		
Measuring cell filling	**Measuring cell cleaning**	
Silicone oil	normal	1
Inert liquid[1]	grease-free to cleanliness level 2	3
Measuring span (min. ... max.)		
2.5 ... 250 mbar	(1.004 ... 100 inH_2O)	D
6 ... 600 mbar	(2.4 ... 240 inH_2O)	E
16 ... 1600 mbar	(6.4 ... 642 inH_2O)	F
50 ... 5000 mbar	(20 ... 2000 inH_2O)	G
0.3 ... 30 bar	(4.35 ... 435 psi)	H
Wetted parts materials		
(stainless steel process flanges)		
Seal diaphragm	Parts of measuring cell	
Stainless steel	Stainless steel	A
Hastelloy	Stainless steel	B
Gold[2]	Gold	L
Version for diaphragm seal [3) 4) 5) 6)]		Y
Process connection		
Female thread ¼-18 NPT with flange connection		
• Sealing screw opposite process connection		
- Mounting thread $^7/_{16}$-20 UNF to IEC 61518/DIN EN 61518		3
- Mounting thread M12 to DIN 19213 (only for replacement requirement)		1
• Venting on side of process flanges, location of vent valve at top of process flanges (see dimensional drawing)		
- Mounting thread $^7/_{16}$-20 UNF to IEC 61518/DIN EN 61518		7
- Mounting thread M12 to DIN 19213 (only for replacement requirement)		5
Non-wetted parts materials		
process flange screws	Electronics enclosure	
Stainless steel	Die-cast aluminum	2
Stainless steel	Stainless steel precision casting[7]	3
Version		
• Standard version, German plate inscription, setting for pressure unit: bar)		1
• International version, English plate inscription, setting for pressure unit: bar		2
• Chinese version, English plate inscription, setting for pressure unit: Pascal		3
All versions include DVD with compact operating instructions in various EU languages.		
Explosion protection		
• None		A
• With ATEX, Type of protection:		
- "Intrinsic safety (Ex ia)"		B
- "Explosion-proof (Ex d)"[8]		D
- "Intrinsic safety and flameproof enclosure" (Ex ia + Ex d)"[9]		P
- "Ex nA/ic (Zone 2)"[10]		E
- "Intrinsic safety, explosion-proof enclosure and dust explosion protection (Ex ia+ Ex d + Zone 1D/2D)"[9)11)]		R
• FM + CSA intrinsic safe (is)[12]		F
• FM + CSA (is + ep) + Ex ia + Ex d (ATEX) + Zone 1D/2D[9)11)12)]		S
• With FM + CSA, Type of protection:		
- "Intrinsic safety and explosion-proof (is + xp)" [8)12)], max PN 360		N C

Selection and Ordering data	Article No.
SITRANS P DS III with HART pressure transmitters for differential pressure and flow, PN 420 (MAWP 6092 psi)	7MF4533 - ■■■■■ - ■■■■
Electrical connection/cable entry	
• Screwed gland M20x1.5	B
• Screwed gland ½-14 NPT	C
• Device plug Han 7D (plastic enclosure) incl. mating connector[13)14)]	D
• Device plugs M12 (stainless steel)[15) 16)]	F
Display	
• Without display	0
• Without visible display (display concealed, setting: mA)	1
• With visible display (setting: mA)	6
• with customer-specific display (setting as specified, Order code "Y21" or "Y22" required)	7

Power supply units see Chap. 7 "Supplementary Components".

Scope of delivery: Pressure transmitter as ordered (Instruction Manual is extra ordering item)

1) For oxygen application, add Order code E10.
2) Not in conjunction with max. measuring span 600 mbar (240.9 inH_2O)
3) When the manufacture's certificate (calibration certificate) has to be ordered for transmitters with diaphragm seals according to IEC 60770-2, it is recommended only to order this certificate exclusively with the diaphragm seals. The measuring accuracy of the total combination is certified here.
4) If the inspection certificate 3.1.is ordered for the transmitter with mounted diaphragm seals this certificate must also be ordered with the respective remote seals.
5) The diaphragm seal is to be specified with a separate order number and must be included wiht the transmitter order number, for example 7MF453.-..Y..-.... and 7MF4900-1....-.B
6) The standard measuring cell filling for configurations with remote seals (Y) is silicone oil.
7) Not in conjunction with Electrical connection "device plug Han 7D".
8) Without cable gland, with blanking plug
9) With enclosed cable gland Ex ia and blanking plug
10) Configurations with device plugs Han and M12 are only available in Ex ic.
11) Only in connection with IP66.
12) Explosion protection acc. to FM/CSA: suitable for installations according to NEC 500/505.
13) Only in connection with Ex approval A, B or E.
14) Permissible only for crimp-contact of conductor cross-section 1 mm^2
15) Only in connection with Ex approval A, B, E or F.
16) M12 delivered without cable socket.

© Siemens 2020

Selection and Ordering data		Article No.
Pressure transmitters for differential pressure and flow, PN 420 (MAWP 6092 psi)		
SITRANS P DS III with PROFIBUS PA (PA) ↗		7 M F 4 5 3 4 -
SITRANS P DS III with FOUNDATION Fieldbus (FF) ↗		7 M F 4 5 3 5 -
↗ Click on the Article No. for the online configuration in the PIA Life Cycle Portal.		■■■■■ - ■■■■
Measuring cell filling	**Measuring cell cleaning**	
Silicone oil	normal	1
Inert liquid[1]	grease-free to cleanliness level 2	3
Nominal measuring range		
250 mbar	(100 inH_2O)	D
600 mbar	(240 inH_2O)	E
1600 mbar	(642 inH_2O)	F
5 bar	(2000 inH_2O)	G
30 bar	(435 psi)	H
Wetted parts materials		
(stainless steel process flanges)		
Seal diaphragm	Parts of measuring cell	
Stainless steel	Stainless steel	A
Hastelloy	Stainless steel	B
Gold [2]	Gold	L
Version for diaphragm seal [3) 4) 5) 6)]		Y
Process connection		
Female thread ¼-18 NPT with flange connection		
• Sealing screw opposite process connection		
- Mounting thread $^7/_{16}$-20 UNF to IEC 61518/DIN EN 61518		3
- Mounting thread M12 to DIN 19213 (only for replacement requirement)		1
• Venting on side of process flanges, location of vent valve at top of process flanges (see dimensional drawing).		
- Mounting thread $^7/_{16}$-20 UNF to IEC 61518/DIN EN 61518		7
- Mounting thread M12 to DIN 19213 (only for replacement requirement)		5
Non-wetted parts materials		
Process flange screws	Electronics enclosure	
Stainless steel	Die-cast aluminum	2
Stainless steel	Stainless steel precision casting	3
Version		
• Standard version, German plate inscription, setting for pressure unit: bar		1
• International version, English plate inscription, setting for pressure unit: bar		2
• Chinese version, English plate inscription, setting for pressure unit: Pascal		3
All versions include DVD with compact operating instructions in various EU languages.		

Selection and Ordering data	Article No.
Pressure transmitters for differential pressure and flow, PN 420 (MAWP 6092 psi)	
SITRANS P DS III with PROFIBUS PA (PA)	7 M F 4 5 3 4 -
SITRANS P DS III with FOUNDATION Fieldbus (FF)	7 M F 4 5 3 5 -
	■■■■■ - ■■■■
Explosion protection	
• None	A
• With ATEX, Type of protection:	
- "Intrinsic safety (Ex ia)"	B
- "Explosion-proof (Ex d)"[7)]	D
- "Intrinsic safety and flameproof enclosure" (Ex ia + Ex d)"[8)]	P
- "Ex nA/ic (Zone 2)" [9)]	E
- "Intrinsic safety, explosion-proof enclosure and dust explosion protection (Ex ia + Ex d + Zone 1D/2D)"[8) 10)]	R
• FM + CSA intrinsic safe (is)[11)]	F
• FM + CSA (is + ep) + Ex ia + Ex d (ATEX)+ Zone 1D/2D[9)10)11)]	S
• With FM + CSA, Type of protection:	
- "Intrinsic safety and explosion-proof (is + xp)"[7)11)], max PN 360	N C
Electrical connection/cable entry	
• Screwed gland M20 x 1.5	B
• Screwed gland ½-14 NPT	C
• Device plugs M12 (stainless steel) [12) 13)]	F
Display	
• Without (display hidden)	0
• Without visible display (display concealed, setting: bar)	1
• With visible display (setting: bar)	6
• With customer-specific display (setting as specified, Order code "Y21" required)	7

Included in delivery of the device:
- Quick-start guide
- Sealing plug(s) or sealing screw(s) for the process flanges(s)

1) For oxygen application, add Order code E10.
2) Not in conjunction with max. measuring span 600 mbar (240.9 inH_2O)
3) When the manufacture's certificate (calibration certificate) has to be ordered for transmitters with diaphragm seals according to IEC 60770-2, it is recommended only to order this certificate exclusively with the diaphragm seals. The measuring accuracy of the total combination is certified here.
4) If the inspection certificate 3.1.is ordered for the transmitter with mounted diaphragm seals this certificate must also be ordered with the respective remote seals.
5) The diaphragm seal is to be specified with a separate order number and must be included wiht the transmitter order number, for example 7MF453.-..Y..-.... and 7MF4900-1....-.B
6) The standard measuring cell filling for configurations with remote seals (Y) is silicone oil.
7) Without cable gland, with blanking plug.
8) With enclosed cable gland Ex ia and blanking plug.
9) Configurations with device plugs Han and M12 are only available in Ex ic.
10) Only in connection with IP66.
11) Explosion protection acc. to FM/CSA: suitable for installations according to NEC 500/505.
12) Only in connection with Ex approval A, B, E or F.
13) M12 delivered without cable socket

© Siemens 2020

Selection and Ordering data	Order code	HART	PA	FF
Further designs Add "**-Z**" to Article No. and specify Order code.				
Pressure transmitter with mounting bracket (1x fixing angle, 2 x nut, 2 x U-washer or 1 x bracket, 2 x nut, 2 x U-washer) made of:				
• Steel	**A01**	✓	✓	✓
• Stainless steel 304	**A02**	✓	✓	✓
• Stainless steel 316L	**A03**	✓	✓	✓
O-rings for process flanges (instead of FPM (Viton))				
• PTFE (Teflon)	**A20**	✓	✓	✓
• FEP (with silicone core, approved for food)	**A21**	✓	✓	✓
• FFPM (Kalrez, for measured medium temperatures -15 ... 100 °C (5 ... 212 °F))	**A22**	✓	✓	✓
• NBR (Buna N)	**A23**	✓	✓	✓
Device plugs[1)]				
• Han 7D (metal)	**A30**	✓		
• Han 8D (instead of Han 7D)	**A31**	✓		
• Angled	**A32**	✓		
• Han 8D (metal)	**A33**	✓		
Sealing screws (2 units) ¼-18 NPT, with valve in mat. of process flanges	**A40**	✓	✓	✓
Cable sockets for device plugs M12 (metal (CuZn))	**A50**	✓	✓	✓
Rating plate inscription (instead of German)				
• English	**B11**	✓	✓	✓
• French	**B12**	✓	✓	✓
• Spanish	**B13**	✓	✓	✓
• Italian	**B14**	✓	✓	✓
• Cyrillic (russian)	**B16**	✓	✓	✓
English rating plate Pressure units in inH_2O and/or psi	**B21**	✓	✓	✓
Quality test certificate, 5-point factory calibration (IEC 60770-2)	**C11**	✓	✓	✓
Inspection certificate Acc. to EN 10204-3.1	**C12**	✓	✓	✓
Factory certificate Acc. to EN 10204-2.2	**C14**	✓	✓	✓
Inspection certificate (EN 10204-3.1) PMI test of parts in contact with medium	**C15**	✓	✓	✓
Functional safety (SIL2) Devices suitable for use according to IEC 61508 and IEC 61511. Includes SIL conformity declaration	**C20**	✓		
Functional safety (PROFIsafe) Certificate and PROFIsafe protocol	**C21**[2)]		✓	
Functional safety (SIL2/3) Devices suitable for use according to IEC 61508 and IEC 61511. Includes SIL conformity declaration	**C23**	✓		
PED for Russia with initial calibration mark	**C99**	✓	✓	✓

Selection and Ordering data	Order code			
Setting of the upper saturation limit of the output signal to 22.0\ mA	**D05**	✓		
Manufacturer's declaration acc. to NACE (MR 0103-2012 and MR 0175-2009) (only together with seal diaphragm made of Hastelloy and stainless steel)	**D07**	✓	✓	✓
Degree of protection IP66/IP68 (only for M20 x 1.5 and ½-14 NPT)	**D12**	✓	✓	✓
Nominal pressure rating PN 500 (MAWP 7250 psi) (Only for measuring cell 600 mbar ... 30 bar (240 inH_2O ... 435 psi), SIL- and Ex-options not possible))[3)]	**D56**	✓		
Capri cable gland 4F CrNi and clamping device (848699 + 810634) included	**D59**	✓	✓	✓
Use in or on zone 1D/2D[4)] (only together with type of protection "Intrinsic safety" (transmitter 7MF4...-.....-.B.. Ex ia)"and IP66)	**E01**	✓	✓	✓
Export approval Korea	**E11**	✓	✓	✓
CRN approval Canada (Canadian Registration Number)	**E22**[5)]	✓	✓	✓
Dual seal	**E24**	✓	✓	✓
Explosion-proof "Intrinsic safety" (Ex ia) to INMETRO (Brazil) (only for transmitter 7MF4...-.....-.B..)	**E25**[6)]	✓	✓	✓
"Flameproof" explosion protection according to INMETRO (Brazil) (only for transmitter 7MF4...-.....-.D..)	**E26**[6)]	✓	✓	✓
Explosion-proof "Intrinsic safety" (Ex ia + Ex d) to INMETRO (Brazil) (only for transmitter 7MF4...-.....-.P..)	**E28**[6)]	✓	✓	
Ex Approval IEC Ex (Ex ia) (only for transmitter 7MF4...-.....-.B..)	**E45**[6)]	✓	✓	✓
Ex Approval IEC Ex (Ex d) (only for transmitter 7MF4...-.....-.D..)	**E46**[6)]	✓	✓	✓
Explosion-proof "Intrinsic safety" to NEPSI (China) (only for transmitter 7MF4...-.....-.B..)	**E55**[6)]	✓	✓	✓
Ex prot. "Explosion-proof" to NEPSI (China) (only for transmitter 7MF4...-.....-.D..)	**E56**[6)]	✓	✓	✓
Explosion-proof "Zone 2" to NEPSI (China) (only for transmitter 7MF4...-.....-.E..)	**E57**[6)]	✓	✓	✓
Ex protection „Ex ia", „Ex d" and „Zone 2" to NEPSI (China) (only for transmitter 7MF4...-.....-.R..)	**E58**[6)]	✓	✓	✓
"Intrinsic safety" and "Explosion-proof" explosion protection acc. to Kosha (Korea) (only for transmitter 7MF4...-.....-.[B, D]..-Z + E11)	**E70**[6)]	✓	✓	✓
Ex-protection Ex ia acc. to EAC Ex (Russia)	**E80**	✓	✓	✓
Ex-protection Ex d acc. to EAC Ex (Russia)	**E81**	✓	✓	✓
Ex-protection Ex nA/ic (Zone 2) according to EAC Ex (Russia)	**E82**	✓	✓	✓
Ex-protection Ex ia + Ex d + Zone 1D/2D according to EAC Ex (Russia)	**E83**	✓	✓	✓

© Siemens 2020

Selection and Ordering data	Order code	HART	PA	FF
Further designs Add "**-Z**" to Article No. and specify Order code.				
Two coats of lacquer on enclosure and cover (PU on epoxy)	**G10**	✓	✓	✓
Interchanging of process connection side	**H01**	✓	✓	✓
Stainless steel process flanges for vertical differential pressure lines	**H03**	✓	✓	✓
Transient protector 6 kV (lightning protection)	**J01**	✓	✓	✓
Chambered graphite gasket for process flange	**J02**	✓	✓	✓
EPDM O-rings for process flange with approval (WRC/WRAS)	**J05**	✓	✓	✓
Vent valve or blanking plug of process flange welded-in (orientation: on right when viewing the display)[7]	**J08**	✓	✓	✓
Vent valve or blanking plug of process flange welded-in (orientation: on left when viewing the display)[7]	**J09**	✓	✓	✓
Marine approvals				
• Det Norske Veritas Germanischer Lloyd (DNV-GL)	**S10**	✓	✓	✓
• Lloyds Register (LR)	**S11**	✓	✓	✓
• French marine classification society Bureau Veritas (BV)	**S12**	✓	✓	✓
• American Bureau of Shipping (ABS)	**S14**	✓	✓	✓
• Russian Maritime Register (RMR)	**S16**	✓	✓	✓
• Korean Register of Shipping (KR)	**S17**	✓	✓	✓

1) Device plug Han IP65
2) Profisafe transmitters can only be operated with the S7 F Systems V6.1 configuration software in combination with S7-400H
3) Tested according to IEC 61010. Only for media of the group of fluids 2 in accordance with PED permissible. Not for use with dangerous media suitable.
4) Option does not contain gas explosion protection; only dust explosion protection: Use in or at Zone 1D/2D.
5) Cannot be ordered with remote seal.
6) When the additional ex option is selected, the ATEX marking on the device is omitted. Only the Ex option selected via the Z option is marked.
7) Blanking plug is standard configuration. Order option A40 if a vent valve is required instead of a blanking plug.

Selection and Ordering data	Order code	HART	PA	FF
Additional data Please add "**-Z**" to Article No. and specify Order code(s) and plain text.				
Measuring range to be set Specify in plain text:				
• in the case of linear characteristic curve (max. 5 characters): Y01: ... up to ... mbar, bar, kPa, MPa, psi	**Y01**	✓	✓[1]	
• in the case of square rooted characteristic (max. 5 characters): Y02: ... up to ... mbar, bar, kPa, MPa, psi	**Y02**	✓		
Stainless steel tag plate and entry in device variable (measuring point description) Max. 16 characters, specify in plain text: Y15:	**Y15**	✓	✓	✓
Measuring point text (entry in device variable) Max. 27 char., specify in plain text: Y16:	**Y16**	✓	✓	✓
Entry of HART address (TAG) Max. 8 char., specify in plain text: Y17:	**Y17**	✓		
Setting of pressure indication in pressure units Specify in plain text (standard setting: bar): Y21: mbar, bar, kPa, MPa, psi, ... Note: The following pressure units can be selected: bar, mbar, mm H_2O*), inH_2O*), ftH_2O*), mmHG, inHG, psi, Pa, kPa, MPa, g/cm^2, kg/cm^2, Torr, ATM or % *) ref. temperature 20 °C	**Y21**	✓	✓	✓
Setting of pressure indication in non-pressure units[2] Specify in plain text: Y22: ..... up to ..... l/min, m^3/h, m, USgpm, ... (specification of measuring range in pressure units "Y01" or "Y02" is essential, unit with max. 5 characters)	**Y22 + Y01** *or* **Y02**	✓		
Preset bus address possible between 1 and 126 Specify in plain text: Y25:	**Y25**		✓	✓
Damping adjustment in seconds (0 ... 100 s)	**Y30**	✓	✓	✓

Factory mounting of valve manifolds, see accessories.

Only Y01, Y15, Y16, Y17, Y21, Y22, Y25 and D05 can be factory preset.

✓ = available

1) Measuring accuracies for PROFIBUS PA transmitters with Option Y01 are calculated in the same way as for HART devices.
2) Preset values can only be changed over SIMATIC PDM.

© Siemens 2020

Dimensional drawings

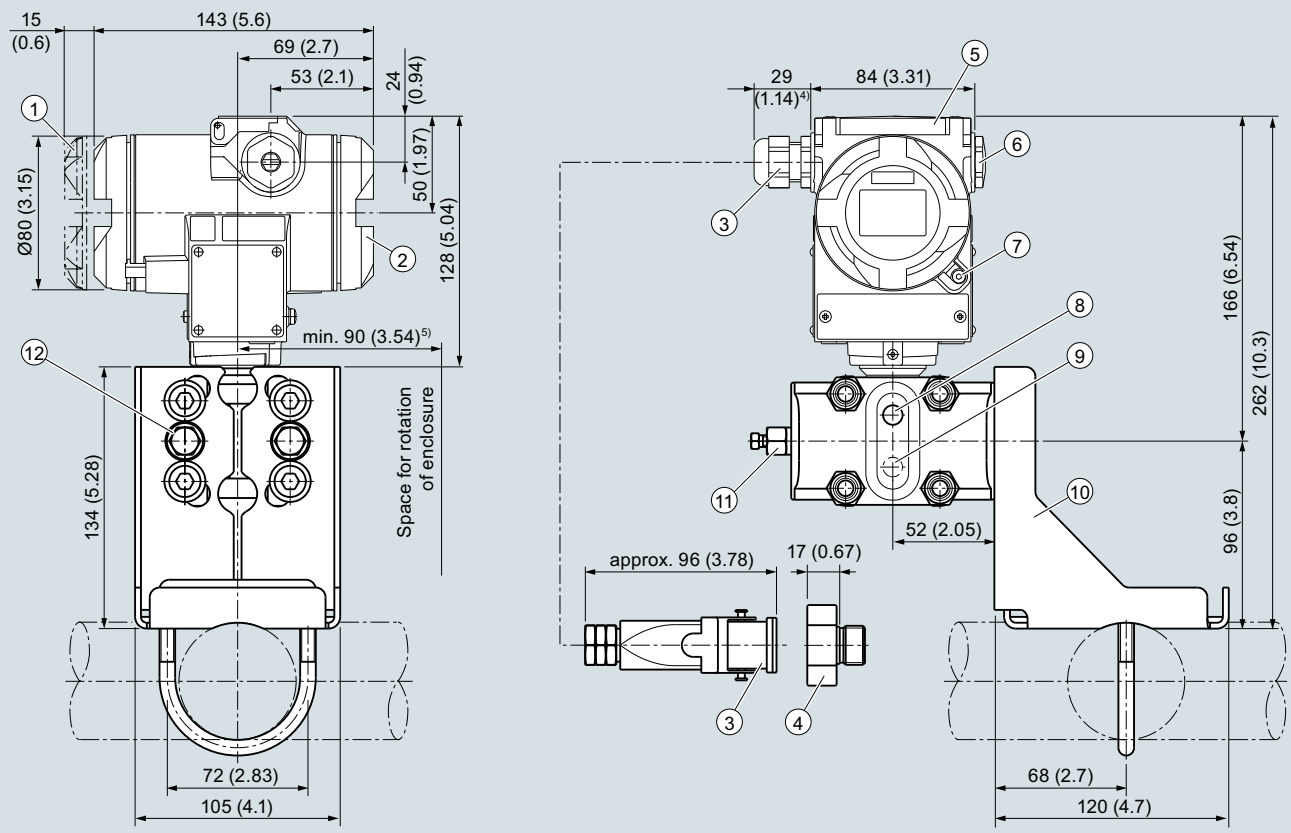

1. Electronics side, local display (longer overall length for cover with inspection window)[1]
2. Connection side[1]
3. Electrical connection:
   - Pg 13.5 screw gland (adapter)[2] [3]
   - M20 x 1,5 screw gland
   - ½-14 NPT screw gland
   - Han 7D/Han 8D[2] [3] device plug
4. Harting adapter
5. Cover over buttons
6. Blanking plug
7. Safety catch (only for "flameproof enclosure" type of protection; not shown in the drawing)
8. Lateral ventilation for liquid measurement (Standard)
9. Lateral ventilation for gas measurement (order option H02)
10. Mounting bracket (optional)
11. Sealing plug with valve (optional)
12. Process connection: ¼-18 NPT (IEC 61518)

1) In addition, allow approx. 20 mm (0.79 inch) for the thread length
2) Not with "flameproof enclosure" type of protection
3) Not for type of protection "FM + CSA" [is + XP]"
4) For Pg 13.5 with adapter, approx. 45 mm (1.77 inch)
5) 92 mm (3.62 inch) minimum distance for rotating with indicator

SITRANS P DS III pressure transmitters for differential pressure and flow, dimensions in mm (inch)

© Siemens 2020

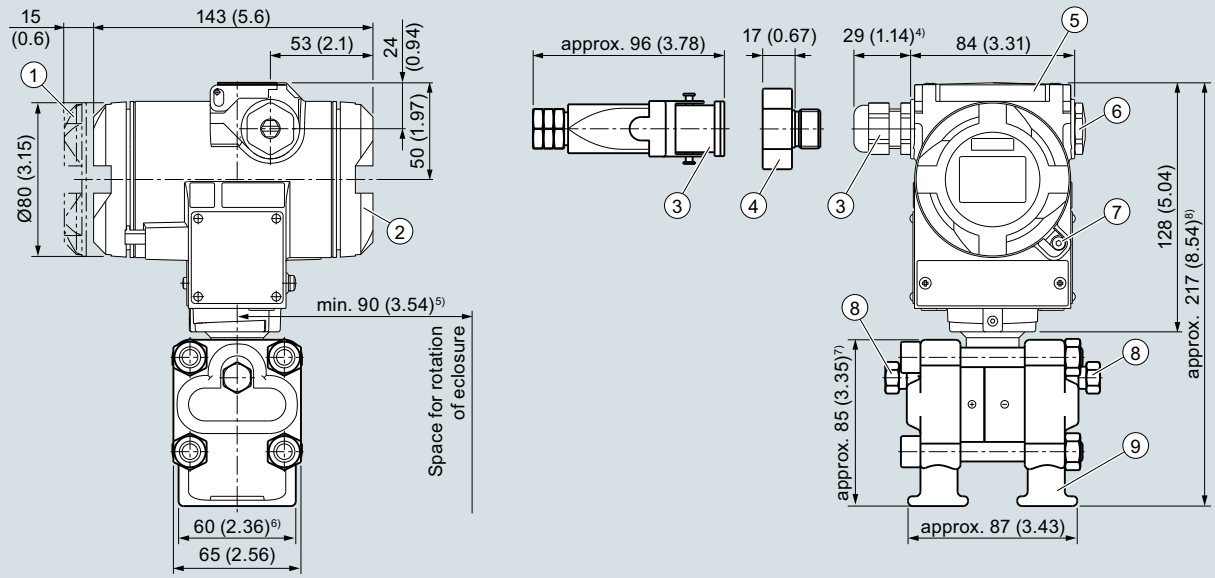

1. Electronics side, local display (longer overall length for cover with inspection window)[1]
2. Connection side[1]
3. Electrical connection:
   - Pg 13.5 screw gland (adapter)[2] [3]
   - M20 x 1,5 screw gland
   - ½-14 NPT screw gland
   - Han 7D/Han 8D[2] [3] device plug
4. Harting adapter
5. Cover over buttons
6. Blanking plug
7. Safety catch (only for "flameproof enclosure" type of protection; not shown in the drawing)
8. Sealing plug with valve (optional)
9. Process connection: ¼-18 NPT (IEC 61518)

1) In addition, allow approx. 20 mm (0.79 inch) for the thread length
2) Not with "flameproof enclosure" type of protection
3) Not for type of protection "FM + CSA" [is + XP]"
4) For Pg 13.5 with adapter, approx. 45 mm (1.77 inch)
5) 92 mm (3.62 inch) minimum distance for rotating with indicator
6) 74 mm (2.9 inch) for PN ≥ 420 (MAWP ≥ 6092 psi)
7) 91 mm (3.6 inch) for PN ≥ 420 (MAWP ≥ 6092 psi)
8) 219 mm (8.6 inch) for PN ≥ 420 (MAWP ≥ 6092 psi)

SITRANS P DS III pressure transmitters for differential pressure and flow, with process covers for vertical differential pressure lines, optional "H03" , dimensional drawing, dimensions in mm (inch)

SITRANS P DS III pressure transmitters for differential pressure and flow, with process covers for vertical differential pressure lines

© Siemens 2020

Technical specifications

SITRANS P DS III for level			
Input			
Measured variable	Level		
Measuring span (infinitely adjustable) or nominal measuring range and maximum operating pressure (pursuant to Pressure Equipment Directive 2014/68/EU)	**HART**	**PROFIBUS PA/ FOUNDATION Fieldbus**	
	Measuring span	Nominal measuring range	Max. operating pressure MAWP (PS)
	25 ... 250 mbar 2.5 ... 25 kPa 10 ... 100 inH_2O	250 mbar 25 kPa 100 inH_2O	See "Mounting flange"
	25 ... 600 mbar 2.5 ...60 kPa 10 ... 240 inH_2O	600 mbar 60 kPa 240 inH_2O	
	53 ... 1600 mbar 5.3 ...160 kPa 21 ... 640 inH_2O	1600 mbar 160 kPa 642 inH_2O	
	160 ... 5000 mbar 16 ...500 kPa 2.32 ... 72.5 psi	5000 mbar 500 kPa 72.5 psi	
Lower measuring limit			
• Measuring cell with silicone oil filling	-100 % of max. measuring span or 30 mbar a/3 kPa a/0.44 psi a depending on mounting flange		
• Measuring cell with inert filling liquid	-100 % of max. measuring span or 30 mbar a/3 kPa a/0.44 psi a depending on mounting flange		
Upper measuring limit	100 % of max. measuring span		
Lower range value	Between the measuring limits (fully adjustable)		
Output	**HART**	**PROFIBUS PA/FOUNDATION Fieldbus**	
Output signal	4 ... 20 mA	Digital PROFIBUS PA and FOUNDATION Fieldbus signal	
• Lower limit (infinitely adjustable)	3.55 mA, factory preset to 3.84 mA	-	
• Upper limit (infinitely adjustable)	23 mA, factory preset to 20.5 mA or optionally set to 22.0 mA	-	
Load			
• Without HART	$R_B \leq (U_H - 10.5\ V)/0.023\ A$ in Ω, U_H: Power supply in V	-	
• With HART	R_B = 230 ... 500 Ω (SIMATIC PDM) or R_B = 230 ... 1100 Ω (HART Communicator)	-	
Physical bus	-	IEC 61158-2	
Protection against polarity reversal	Protected against short-circuit and polarity reversal. Each connection against the other with max. supply voltage.		
Electrical damping (step width 0.1 s)	Set to 2 s (0 ... 100 s)		

© Siemens 2020

SITRANS P DS III for level	
Measuring accuracy	Acc. to IEC 60770-1
Reference conditions	• Increasing characteristic • Lower range value 0 bar/kPa/psi • Stainless steel seal diaphragm • Silicone oil filling • Room temperature 25 °C (77 °F)
Measuring span ratio r (spread, Turn-Down)	r = max. measuring span/set measuring span or nominal measuring range
Error in measurement at limit setting incl. hysteresis and reproducibility	
• Linear characteristic	
- 250 mbar/25 kPa/3.6 psi	r ≤ 5 : ≤ 0.125 % 5 < r ≤ 10 : ≤ (0.007 · r + 0.09) %
- 600 mbar/60 kPa/8.7 psi	r ≤ 5 : ≤ 0.125 % 5 < r ≤ 25 : ≤ (0.007 · r + 0.09) %
- 1600 mbar/160 kPa/23.21 psi 5 bar/500 kPa/72.5 psi	r ≤ 5 : ≤ 0.125 % 5 < r ≤ 30 : ≤ (0.007 · r + 0.09) %
Influence of ambient temperature (in percent per 28 °C (50 °F))	
• 250 mbar/25 kPa/3.6 psi	≤ (0.4 · r + 0.16) %
• 600 mbar/60 kPa/8.7 psi	≤ (0.24 · r + 0.16) %
• 1600 mbar/160 kPa/23.21 psi 5 bar/500 kPa/72.5 psi	≤ (0.2 · r + 0.16) %
Influence of static pressure	
• on the lower range value	
- 250 mbar/25 kPa/3.6 psi	≤ (0.3 · r) % per nominal pressure
- 600 mbar/60 kPa/8.7 psi	≤ (0.15 · r) % per nominal pressure
- 1600 mbar/160 kPa/23.21 psi 5 bar/500 kPa/72.5 psi	≤ (0.1 · r) % per nominal pressure
• on the measuring span	≤ (0.1 · r) % per nominal pressure
Long-term stability (temperature change ± 30 °C (± 54 °F))	≤ (0.25 · r)% in 5 years static pressure max. 70 bar/7 MPa/1015 psi
Effect of mounting position	Depending on filling liquid of mounting flange
Effect of auxiliary power supply (in percent per change in voltage)	0.005 % per 1 V
Measuring value resolution for PROFIBUS PA and FOUNDATION Fieldbus	$3 \cdot 10^{-5}$ of nominal measuring range
Operating conditions	
Degree of protection	
• according to EN 60529	IP66 (optional IP66/IP68)
• according to NEMA 250	Type 4X
Temperature of medium	**Note:** Always take into account assignment of max. permissible operating temperature to max. permissible operating pressure of the respective flange connection!
• Measuring cell with silicone oil filling	-40 ... +100[1)] °C (-40 ... +212[1)] °F)
- High-pressure side	p_{abs} ≥ 1 bar: -40 ... +175 °C (-40 ... +347 °F) p_{abs} < 1 bar: -40 ... +80 °C (-40 ... +176 °F)
- Low-pressure side	-40 ... +100 °C (-40 ... +212 °F) -20 ... +60 °C (-4 ... +140 °F) in conjunction with dust explosion protection
Ambient conditions	
• Ambient temperature	
- Transmitter	-40 ... +85 °C (-40 ... +185 °F)
- -Display readable	-30 ... +85 °C (-22 ... +185 °F)
• Storage temperature	-50 ... +85 °C (-58 ... +185 °F)
• Climatic class	
- Condensation	Relative humidity 0 ... 100 %, condensation permissible, suitable for use in the tropics
• Electromagnetic Compatibility	
- Emitted interference and interference immunity	Acc. to IEC 61326 and NAMUR NE 21

© Siemens 2020

SITRANS P DS III for level		
Design		
Weight (without options)		
• To EN (pressure transmitter with mounting flange, without tube)	≈ 11 ... 13 kg (≈ 24.2 ... 28.7 (lb)	
• To ASME (pressure transmitter with mounting flange, without tube)	≈ 11 ... 18 kg (≈ 24.2 ... 39.7 lb)	
Enclosure material	Low-copper die-cast aluminum, GD-AlSi12 or stainless steel precision casting, mat. no. 1.4408	
Wetted parts materials		
High-pressure side		
• Seal diaphragm of mounting flange	• Stainless steel, W.-Nr. 1.4404/316L - coated with PFA - coated with PTFE - coated with ECTFE - gold plated • Monel 400, mat. no. 2.4360 • Hastelloy C276, mat. no 2.4619 • Hastelloy C4, mat. no. 2.4602 • Hastelloy C22, mat. no. 2.4602 • Tantalum • Titanium, mat. no. 3.7035 • Nickel 201 • Duplex 2205, mat. no. 1.4462	
Measuring cell filling	Silicone oil	
Process connection		
• High-pressure side	Flange to EN and ASME	
• Low-pressure side	Female thread ¼-18 NPT and flange connection with mounting thread M10 to DIN 19213 or $^{7}/_{16}$-20 UNF to IEC 61518/DIN EN 61518	
Power supply U_H	**HART**	**PROFIBUS PA/FOUNDATION Fieldbus**
Terminal voltage on transmitter	10.5 ... 45 V DC 10.5 ... 30 V DC in intrinsically-safe mode	-
Power supply		Supplied through bus
Separate supply voltage	-	No
Bus voltage		
• Not Ex	-	9 ... 32 V
• With intrinsically-safe operation	-	9 ... 24 V
Current consumption		
• Basic current (max.)	-	12.5 mA
• Start-up current ≤ basic current	-	Yes
• Max. current in event of fault	-	15.5 mA
Fault disconnection electronics (FDE) available	-	Yes

© Siemens 2020

SITRANS P DS III for level		
Certificates and approvals	**HART**	**PROFIBUS PA/ FOUNDATION Fieldbus**
Classification according to PED 2014/68/EU	For gases of fluid group 1 and liquids of fluid group 1; complies with requirements of article 4, paragraph 3 (sound engineering practice)	
Explosion protection		
• Intrinsic safety "i"	PTB 13 ATEX 2007 X	
- Marking	Ex II 1/2 G Ex ia/ib IIC T4/T5/T6 Ga/Gb	
- Permissible ambient temperature	-40 ... +85 °C (-40 ... +185 °F) temperature class T4; -40 ... +70 °C (-40 ... +158 °F) temperature class T5; -40 ... +60 °C (-40 ... +140 °F) temperature class T6	
- Connection	To certified intrinsically-safe circuits with peak values: U_i = 30 V, I_i = 100 mA, P_i = 750 mW; R_i = 300 Ω	FISCO supply unit: U_o = 17.5 V, I_o = 380 mA, P_o = 5.32 W Linear barrier: U_o = 24 V, I_o = 250 mA, P_o = 1.2 W
- Effective internal inductance/capacitance	L_i = 0.4 mH, C_i = 6 nF	L_i = 7 µH, C_i = 1.1 nF
• Explosion-proof "d"	PTB 99 ATEX 1160	
- Marking	Ex II 1/2 G Ex d IIC T4/T6 Gb	
- Permissible ambient temperature	-40 ... +85 °C (-40 ... +185 °F) temperature class T4; -40 ... +60 °C (-40 ... +140 °F) temperature class T6	
- Connection	To circuits with values: U_H = 10.5 ... 45 V DC	To circuits with values: U_H = 9 ... 32 V DC
• Dust explosion protection for zone 20	PTB 01 ATEX 2055	
- Marking	Ex II 1 D Ex ta IIIC T120°C Da Ex II 1/2 D Ex ta/tb IIIC T120°C Da/Db	
- Permissible ambient temperature	-40 ... +85 °C (-40 ... +185 °F)	
- Max. surface temperature	120 °C (248 °F)	
- Connection	To certified intrinsically-safe circuits with peak values: U_i = 30 V, I_i = 100 mA, P_i = 750 mW, R_i = 300 Ω	FISCO supply unit: U_o = 17.5 V, I_o = 380 mA, P_o = 5.32 W Linear barrier: U_o = 24 V, I_o = 250 mA, P_o = 1.2 W
- Effective internal inductance/capacitance	L_i = 0.4 mH, C_i = 6 nF	L_i = 7 µH, C_i = 1.1 nF
• Dust explosion protection for zone 21/22	PTB 01 ATEX 2055	
- Marking	Ex II 2 D Ex tb IIIC T120°C Db	
- Connection	To circuits with values: U_H = 10.5 ... 45 V DC; P_{max} = 1.2 W	To circuits with values: U_H = 9 ... 32 V DC; P_{max} = 1 W
• Type of protection "n" (zone 2)	PTB 13 ATEX 2007 X	
- Marking	Ex II 2/3 G Ex nA IIC T4/T5/T6 Gb/Gc Ex II 2/3 G Ex ic IIC T4/T5/T6 Gb/Gc	
- Connection (Ex nA)	U_m = 45 V	U_m = 32 V
- Connection (Ex ic)	To circuits with values: U_i = 45 V	FISCO supply unit ic: U_o = 17.5 V, I_o = 570 mA Linear barrier: U_o = 32 V, I_o = 132 mA, P_o = 1 W
- Effective internal inductance/capacitance	L_i = 0.4 mH, C_i = 6 nF	L_i = 7 µH, C_i = 1.1 nF
• Explosion protection acc. to FM	Certificate of Compliance 3008490	
- Identification (XP/DIP) or (IS); (NI)	CL I, DIV 1, GP ABCD T4...T6; CL II, DIV 1, GP EFG; CL III; CL I, ZN 0/1 AEx ia IIC T4...T6; CL I, DIV 2, GP ABCD T4...T6; CL II, DIV 2, GP FG; CL III	
• Explosion protection to CSA	Certificate of Compliance 1153651	
- Identification (XP/DIP) or (IS)	CL I, DIV 1, GP ABCD T4...T6; CL II, DIV 1, GP EFG; CL III; Ex ia IIC T4...T6; CL I, DIV 2, GP ABCD T4...T6; CL II, DIV 2, GP FG; CL III	

1) This value may be increased if the process connection is sufficiently insulated.

© Siemens 2020

HART communication	
HART	230 ... 1100 Ω
Protocol	HART Version 5.x
Software for computer	SIMATIC PDM
PROFIBUS PA communication	
Simultaneous communication with master class 2 (max.)	4
The address can be set using	Configuration tool or local operation (standard setting address 126)
Cyclic data usage	
• Output byte	5 (one measured value) or 10 (two measured values)
• Input byte	0, 1, or 2 (register operating mode and reset function for metering)
Internal preprocessing	
Device profile	PROFIBUS PA Profile for Process Control Devices Version 3.0, class B
Function blocks	2
• Analog input	
- Adaptation to customer-specific process variables	Yes, linearly rising or falling characteristic
- Electrical damping, adjustable	0 ... 100 s
- Simulation function	Input/Output
- Failure mode	parameterizable (last good value, substitute value, incorrect value)
- Limit monitoring	Yes, one upper and lower warning limit and one alarm limit respectively
• Register (totalizer)	Can be reset, preset, optional direction of counting, simulation function of register output
- Failure mode	parameterizable (summation with last good value, continuous summation, summation with incorrect value)
- Limit monitoring	One upper and lower warning limit and one alarm limit respectively
• Physical block	1
Transducer blocks	2
• Pressure transducer block	
- Can be calibrated by applying two pressures	Yes
- Monitoring of sensor limits	Yes
- Specification of a container characteristic with	Max. 30 nodes
- Square-rooted characteristic for flow measurement	Yes
- Gradual volume suppression and implementation point of square-root extraction	Parameterizable
- Simulation function for measured pressure value and sensor temperature	Constant value or over parameterizable ramp function

FOUNDATION Fieldbus communication	
Function blocks	3 function blocks analog input, 1 function block PID
• Analog input	
- Adaptation to customer-specific process variables	Yes, linearly rising or falling characteristic
- Electrical damping, adjustable	0 ... 100 s
- Simulation function	Output/input (can be locked within the device with a bridge)
- Failure mode	parameterizable (last good value, substitute value, incorrect value)
- Limit monitoring	Yes, one upper and lower warning limit and one alarm limit respectively
- Square-rooted characteristic for flow measurement	Yes
• PID	Standard FOUNDATION Fieldbus function block
• Physical block	1 resource block
Transducer blocks	1 transducer block Pressure with calibration, 1 transducer block LCD
• Pressure transducer block	
- Can be calibrated by applying two pressures	Yes
- Monitoring of sensor limits	Yes
- Simulation function: Measured pressure value, sensor temperature and electronics temperature	Constant value or over parameterizable ramp function
Mounting flange	
Nominal diameter	Nominal pressure
• Acc. to EN 1092-1	
- DN 80	PN 40
- DN100	PN16, PN40
• To ASME B16.5	
- 3 inch	class 150, class 300
- 4 inch	class 150, class 300

© Siemens 2020

Selection and Ordering data		Article No.
Pressure transmitter for level, SITRANS P DS III with HART		↗ 7MF4633-
↗ Click on the Article No. for the online configuration in the PIA Life Cycle Portal.		■■Y■■-■■■■
Measuring cell filling	**Measuring cell cleaning**	
Silicone oil	normal	1
Measuring span (min. ... max.)		
25 ... 250 mbar	(10 ... 100 inH_2O)	D
25 ... 600 mbar	(10 ... 240 inH_2O)	E
53 ... 1600 mbar	(21 ... 642 inH_2O)	F
0.16 ... 5 bar	(64.3 ... 2000 inH_2O)	G
Process connection of low-pressure side		
Female thread ¼-18 NPT with flange connection		
• Mounting thread $^7/_{16}$-20 UNF to IEC 61518/DIN EN 61518		2
• Mounting thread M10 to DIN 19213 (only for replacement requirement)		0
Non-wetted parts materials		
process flange screws	Electronics enclosure	
Stainless steel	Die-cast aluminum	2
Stainless steel	Stainless steel precision casting[1]	3
Version		
• Standard version, German plate inscription, setting for pressure unit: bar)		1
• International version, English plate inscription, setting for pressure unit: bar		2
• Chinese version, English plate inscription, setting for pressure unit: Pascal		3
All versions include DVD with compact operating instructions in various EU languages.		
Explosion protection		
• None		A
• With ATEX, Type of protection:		
- "Intrinsic safety (Ex ia)"		B
- "Explosion-proof (Ex d)"[2]		D
- "Intrinsic safety and flameproof enclosure" (Ex ia + Ex d)"[3]		P
- "Ex nA/ic (Zone 2)" [4]		E
- "Intrinsic safety, explosion-proof enclosure and dust explosion protection (Ex ia+ Ex d + Zone 1D/2D)"[3][5]		R
• FM + CSA intrinsic safe (is)[6]		F
• FM + CSA (is + ep) + Ex ia + Ex d (ATEX) + Zone 1D/2D[3][5][6]		S
• With FM + CSA, Type of protection:		
- "Intrinsic Safe and Explosion Proof (is + xp)"[1][6]		N C
Electrical connection/cable entry		
• Screwed gland M20x1.5		B
• Screwed gland ½-14 NPT		C
• Device plug Han 7D (plastic enclosure) incl. mating connector[7]		D
• Device plugs M12 (stainless steel) [8] [9]		F
Display		
• Without display		0
• Without visible display (display concealed, setting: mA)		1
• With visible display (setting mA)		6
• With customer-specific display (setting as specified, Order code "Y21" or "Y22" required)		7

Ordering information

1st order item: Pressure transmitter 7MF4633-...
2nd order item: Mounting flange 7MF4912-3...

ordering example

Item line 1:	7MF4633-1EY20-1AA1-Z
B line:	Y01
C line:	Y01: 80 to 143 mbar (1.16 to 2.1 psi)
Item line 2:	7MF4912-3GE01

Power supply units see Chap. 7 "Supplementary Components".

Included in delivery of the device:
- Quick-start guide
- Sealing plug(s) or sealing screw(s) for the process flanges(s)

1) Not in conjunction with Electrical connection "device plug Han 7D".
2) Without cable gland, with blanking plug.
3) With enclosed cable gland Ex ia and blanking plug.
4) Configurations with device plugs Han and M12 are only available in Ex ic.
5) Only in connection with IP66.
6) Explosion protection acc. to FM/CSA: suitable for installations according to NEC 500/505.
7) Only in connection with Ex approval A, B or E.
8) M12 delivered without cable socket
9) Only in connection with Ex approval A, B, E or F.

© Siemens 2020

Selection and Ordering data		Article No.
Pressure transmitters for level		
SITRANS P DS III with PROFIBUS PA (PA) ↗		7 M F 4 6 3 4 -
SITRANS P DS III with FOUNDATION Fieldbus (FF) ↗		7 M F 4 6 3 5 -
↗ Click on the Article No. for the online configuration in the PIA Life Cycle Portal.		1 ■ Y ■ ■ - ■ ■ ■ ■
Nominal measuring range		
250 mbar	(100 inH_2O)	D
600 mbar	(240 inH_2O)	E
1600 mbar	(642 inH_2O)	F
5 bar	(2000 inH_2O)	G
Process connection of low-pressure side		
Female thread ¼-18 NPT with flange connection		
• Mounting thread $^7/_{16}$-20 UNF to IEC 61518/DIN EN 61518		2
• Mounting thread M10 to DIN 19213 (only for replacement requirement)		0
Non-wetted parts materials		
process flange screws	Electronics enclosure	
Stainless steel	Die-cast aluminum	2
Stainless steel	Stainless steel precision casting	3
Version		
• Standard version, German plate inscription, setting for pressure unit: bar)		1
• International version, English plate inscription, setting for pressure unit: bar		2
• Chinese version, English plate inscription, setting for pressure unit: Pascal		3
All versions include DVD with compact operating instructions in various EU languages.		
Explosion protection		
• None		A
• With ATEX, Type of protection:		
- "Intrinsic safety (Ex ia)"		B
- "Explosion-proof (Ex d)"[1]		D
- "Intrinsic safety and flameproof enclosure" (Ex ia + Ex d)"[2]		P
- "Ex nA/ic (Zone 2)" [3]		E
- "Intrinsic safety, explosion-proof enclosure and dust explosion protection (Ex ia + Ex d + Zone 1D/2D)"[2][4]		R
• FM + CSA intrinsic safe (is)[5]		F
• FM + CSA (is + ep) + Ex ia + Ex d (ATEX) + Zone 1D/2D[2][4][5]		S
• With FM + CSA, Type of protection:		
- "Intrinsic Safe and Explosion Proof (is + xp)"[1][5]		N C
Electrical connection/cable entry		
• Screwed gland M20 x 1.5		B
• Screwed gland ½-14 NPT		C
• Device plugs M12 (stainless steel)[6] [7]		F
Display		
• Without display		0
• Without visible display (display concealed, setting: bar)		1
• With visible display (setting: bar)		6
• With customer-specific display (setting as specified, Order code "Y21" required)		7

Ordering information

1st order item: Pressure transmitter 7MF4634-...
2nd order item: Mounting flange 7MF4912-...

ordering example

Item line 1: 7MF4634-1EY20-1AA1
Item line 2: 7MF4912-3GE01

Included in delivery of the device:
- Quick-start guide
- Sealing plug(s) or sealing screw(s) for the process flanges(s)

1) Without cable gland, with blanking plug.
2) With enclosed cable gland Ex ia and blanking plug.
3) Configurations with device plugs Han and M12 are only available in Ex ic.
4) Only in connection with IP66.
5) Explosion protection acc. to FM/CSA: suitable for installations according to NEC 500/505.
6) M12 delivered without cable socket
7) Only in connection with Ex approval A, B, E or F.

© Siemens 2020

Selection and Ordering data	Order code	HART	PA	FF
Further designs				
Add "**-Z**" to Article No. and specify Order code.				
O-rings for process flanges on low-pressure side (instead of FPM (Viton))				
• PTFE (Teflon)	**A20**	✓	✓	✓
• FEP (with silicone core, approved for food)	**A21**	✓	✓	✓
• FFPM (Kalrez, for measured medium temperatures -15 ... 100 °C (5 ... 212 °F))	**A22**	✓	✓	✓
• NBR (Buna N)	**A23**	✓	✓	✓
Device plugs[1]				
• Han 7D (metal)	**A30**	✓		
• Han 8D (instead of Han 7D)	**A31**	✓		
• Angled	**A32**	✓		
• Han 8D (metal)	**A33**	✓		
Sealing screw ¼-18 NPT, with vent valve in mat. of process flanges	**A40**	✓	✓	✓
Cable sockets for device plugs M12 (metal (CuZn))	**A50**	✓	✓	✓
Rating plate inscription (instead of German)				
• English	**B11**	✓	✓	✓
• French	**B12**	✓	✓	✓
• Spanish	**B13**	✓	✓	✓
• Italian	**B14**	✓	✓	✓
• Cyrillic (russian)	**B16**	✓	✓	✓
English rating plate Pressure units in in$H_2$0 and/or psi	**B21**	✓	✓	✓
Quality test certificate, 5-point factory calibration (IEC 60770-2)	**C11**	✓	✓	✓
Inspection certificate Acc. to EN 10204-3.1	**C12**	✓	✓	✓
Factory certificate Acc. to EN 10204-2.2	**C14**	✓	✓	✓
Inspection certificate (EN 10204-3.1) PMI test of parts in contact with medium	**C15**	✓	✓	✓
Functional safety (SIL2) Devices suitable for use according to IEC 61508 and IEC 61511. Includes SIL conformity declaration	**C20**	✓		
Functional safety (PROFIsafe) Certificate and PROFIsafe protocol	**C21**[2]		✓	
Functional safety (SIL2/3) Devices suitable for use according to IEC 61508 and IEC 61511. Includes SIL conformity declaration	**C23**	✓		
PED for Russia with initial calibration mark	**C99**	✓	✓	✓
Setting of the upper saturation limit of the output signal to 22.0 mA	**D05**	✓		
Degree of protection IP66/IP68 (only for M20x1.5 and ½-14 NPT)	**D12**	✓	✓	✓
Supplied with oval flange (1 item), PTFE packing and screws in thread of process flange	**D37**	✓	✓	✓
Capri cable gland 4F CrNi and clamping device (848699 + 810634) included	**D59**	✓	✓	✓

Selection and Ordering data	Order code	HART	PA	FF
Further designs				
Add "**-Z**" to Article No. and specify Order code.				
Use on zone 1D / 2D[3] (only together with type of protection "Intrinsic safety" (transmitter 7MF4...-.....-.B.. Ex ia)"and IP66)	**E01**	✓	✓	✓
Overfilling safety device for flammable and non-flammable liquids (max. PN 32 (MAWP 464 psi), basic device with type of protection "Intrinsic safety (Ex ia)", to WHG and VbF, not together with measuring cell filling "inert liquid")	**E08**	✓		
Export approval Korea	**E11**	✓	✓	✓
Dual seal	**E24**	✓	✓	✓
Explosion-proof "Intrinsic safety" (Ex ia) to INMETRO (Brazil) (only for transmitter 7MF4...-.....-.B..)	**E25**[4]	✓	✓	✓
"Flameproof" explosion protection according to INMETRO (Brazil) (only for transmitter 7MF4...-.....-.D..)	**E26**[4]	✓	✓	✓
Explosion-proof "Intrinsic safety" (Ex ia + Ex d) to INMETRO (Brazil) (only for transmitter 7MF4...-.....-.P..)	**E28**[4]	✓	✓	
Ex Approval IEC Ex (Ex ia) (only for transmitter 7MF4...-.....-.B..)	**E45**[4]	✓	✓	✓
Ex Approval IEC Ex (Ex d) (only for transmitter 7MF4...-.....-.D..)	**E46**[4]	✓	✓	✓
Explosion-proof "Intrinsic safety" to NEPSI (China) (only for transmitter 7MF4...-.....-.B..)	**E55**[4]	✓	✓	✓
Explosion protection "Explosion-proof" to NEPSI (China) (only for transmitter 7MF4...-.....-.D..)	**E56**[4]	✓	✓	✓
Ex protection "Zone 2" to NEPSI (China) (only for transmitter 7MF4...-.....-.E..)	**E57**[4]	✓	✓	✓
Ex protection „Ex ia", „Ex d" and „Zone 2" to NEPSI (China) (only for transmitter 7MF4...-.....-.R..)	**E58**[4]	✓	✓	✓
"Intrinsic safety" and "Explosion-proof" explosion protection acc. to Kosha (Korea) (only for transmitter 7MF4...-.....-.[B, D]..-Z + E11)	**E70**[4]	✓	✓	✓
Ex-protection Ex ia according to EAC Ex (Russia)	**E80**	✓	✓	✓
Ex-protection Ex d according to EAC Ex (Russia)	**E81**	✓	✓	✓
Ex-protection Ex nA/ic (Zone 2) according to EAC Ex (Russia)	**E82**	✓	✓	✓
Ex-protection Ex ia + Ex d + Zone 1D/2D according to EAC Ex (Russia)	**E83**	✓	✓	✓
Two coats of lacquer on enclosure and cover (PU on epoxy)	**G10**	✓	✓	✓
Replacement of process connection side	**H01**	✓	✓	✓

© Siemens 2020

Selection and Ordering data	Order code	HART	PA	FF
Further designs				
Add "**-Z**" to Article No. and specify Order code.				
Transient protector 6 kV (lightning protection)	**J01**	✓	✓	✓
Vent valve or blanking plug of process flange welded-in (orientation: on right when viewing the display)[5]	**J08**	✓	✓	✓
Vent valve or blanking plug of process flange welded-in (orientation: on left when viewing the display)[5]	**J09**	✓	✓	✓

1) Device plug Han IP65
2) Profisafe transmitters can only be operated with the S7 F Systems V6.1 configuration software in combination with S7-400H
3) Option does not contain gas explosion protection; only dust explosion protection: Use in or at Zone 1D/2D.
4) When the additional ex option is selected, the ATEX marking on the device is omitted. Only the Ex option selected via the Z option is marked.
5) Blanking plug is standard configuration. Order option A40 if a vent valve is required instead of a blanking plug.

Selection and Ordering data	Order code	HART	PA	FF
Additional data				
Please add "**-Z**" to Article No. and specify Order code(s) and plain text.				
Measuring range to be set Specify in plain text (max. 5 characters): Y01: ... up to ... mbar, bar, kPa, MPa, psi	**Y01**	✓	✓[1]	
Stainless steel tag plate and entry in device variable (measuring point description) Max. 16 characters, specify in plain text: Y15:	**Y15**	✓	✓	✓
Measuring point text (entry in device variable) Max. 27 characters, specify in plain text: Y16:	**Y16**	✓	✓	✓
Entry of HART address (TAG) Max. 8 characters, specify in plain text: Y17:	**Y17**	✓		
Setting of pressure indicator in pressure units Specify in plain text (standard setting: bar): Y21: mbar, bar, kPa, MPa, psi, ... Note: The following pressure units can be selected: bar, mbar, mm H_2O[*], inH_2O[*], ftH_2O[*], mmHG, inHG, psi, Pa, kPa, MPa, g/cm^2, kg/cm^2, Torr, ATM or % [*] ref. temperature 20 °C	**Y21**	✓	✓	✓
Setting of pressure indicator in non-pressure units[2] Specify in plain text: Y22: ..... up to ..... l/min, m^3/h, m, USgpm, ... (specification of measuring range in pressure units "**Y01**" is essential, unit with max. 5 characters)	**Y22[3] + Y01**	✓		
Preset bus address possible between 1 and 126 Specify in plain text: Y25:	**Y25**		✓	✓
Damping adjustment in seconds (0 ... 100 s)	**Y30**	✓	✓	✓

Only Y01, Y15, Y16, Y17, Y21, Y22, Y25 and D05 can be factory preset

✓ = available

1) Measuring accuracies for PROFIBUS PA transmitters with Option Y01 are calculated in the same way as for HART devices.
2) Preset values can only be changed over SIMATIC PDM.
3) Not in conjunction with over-filling safety device for flammable and non-flammable liquids (Order code "E08")

© Siemens 2020

Selection and Ordering data

Selection and Ordering data		Article No.	Order code
Mounting flange ↗		7MF4912	
Directly mounted on the SITRANS P pressure transmitter (converter part) for level, for DS III series		3 ■■■■	■■■
↗ Click on the Article No. for the online configuration in the PIA Life Cycle Portal.			
Connection to EN 1092-1			
Nominal diameter	**Nominal pressure**		
DN 25	PN 10/16/25/40	Z	J0A
	PN 63/100/160	Z	J0B
DN 40	PN 10/16/25/40	Z	J0C
	PN 63/100	Z	J0D
	PN 160	Z	J0E
DN 50	PN 10/16/25/40	A	
	PN 100	B	
DN 80	PN 10/16/25/40	D	
DN 100	PN 10/16	G	
	PN 25/40	H	
Connection to ASME B16.5			
Nominal diameter	**Nominal pressure**		
1 inch	class 150	Z	J6A
	class 300	Z	J6B
	class 400/600	Z	J6C
	class 900/1500	Z	J6D
1½ inch	class 150	Z	J6E
	class 300	Z	J6F
	class 400/600	Z	J6G
	class 900/1500	Z	J6H
2 inch	class 150	L	
	class 300	M	
	class 400/600	N	
	class 900/1500	P	
3 inch	class 150	Q	
	class 300	R	
4 inch	class 150	T	
	class 300	U	
Flange acc. to JIS			
Nominal diameter	**Nominal pressure**		
JIS DN 50	10 K 316L	Z	J7A
	20 K 316L	Z	J7B
JIS DN 80	10 K 316L	Z	J7C
	20 K 316L	Z	J7D
Other version, add Order code and plain text: Nominal diameter: ...; Nominal press.: ...		Z	J1Y
Wetted parts materials			
• Stainless steel 316L		A	
- Coated with PFA		D	
- Coated with PTFE		E0	
- Coated with ECTFE[1]		F	
• Monel 400, mat. no. 2.4360		G	
• Hastelloy C276, mat. no. 2.4819		J	
• Hastelloy C4, mat. no. 2.4602		U	
• Hastelloy C22, mat. no. 2.4602		V0	
• Tantalum		K	
• Titanium, mat. no. 3.7035 (max. 150 °C (302 °F))		L0	
• Nickel 201 (max. 260 °C (500 °F))		M0	
• Duplex 2205, mat. no. 1.4462		Q	
• Duplex 2205, mat. no. 1.4462, incl. main body		R	
• Stainless steel 316L, gold plated, thickness approx. 25 µm		S0	
Tube length			
• without tube		0	
Other version: add Order code and plain text: material of parts in contact with medium: ....., tubus length:		Z8	K1Y

Selection and Ordering data		Article No.	Order code
Mounting flange		7MF4912	
Directly mounted on the SITRANS P pressure transmitter (converter part) for level, for DS III series		3 ■■■■	■■■
Customer-specific tubus length			
Specify customer-specific length with Y44, see Order Code			
• Wetted parts materials: Stainless steel without foil			
Range	Standard length		
20 ... 50 mm (0.79 ... 1.97")	50 mm (1.97")	A1	
51 ... 100 mm (2.01 ... 3.94")	100 mm (3.94")	A2	
101 ... 150 mm (3.98 ... 5.91")	150 mm (5.91")	A3	
151 ... 200 mm (5.94 ... 7.87")	200 mm (7.87")	A4	
201 ... 250 mm (7.91 ... 9.84")	250 mm (9.84")	A5	
• Wetted parts materials: Stainless steel coated with ECTFE			
Range	Standard length		
20 ... 50 mm (0.79 ... 1.97")	50 mm (1.97")	F1	
51 ... 100 mm (2.01 ... 3.94")	100 mm (3.94")	F2	
101 ... 150 mm (3.98 ... 5.91")	150 mm (5.91")	F3	
151 ... 200 mm (5.94 ... 7.87")	200 mm (7.87")	F4	
201 ... 250 mm (7.91 ... 9.84")	250 mm (9.84")	F5	
• Wetted parts materials: Stainless steel coated with PFA			
Range	Standard length		
20 ... 50 mm (0.79 ... 1.97")	50 mm (1.97")	D1	
51 ... 100 mm (2.01 ... 3.94")	100 mm (3.94")	D2	
101 ... 150 mm (3.98 ... 5.91")	150 mm (5.91")	D3	
151 ... 200 mm (5.94 ... 7.87")	200 mm (7.87")	D4	
201 ... 250 mm (7.91 ... 9.84")	250 mm (9.84")	D5	
• Wetted parts materials: Monel 400			
Range	Standard length		
20 ... 50 mm (0.79 ... 1.97")	50 mm (1.97")	G1	
51 ... 100 mm (2.01 ... 3.94")	100 mm (3.94")	G2	
101 ... 150 mm (3.98 ... 5.91")	150 mm (5.91")	G3	
151 ... 200 mm (5.94 ... 7.87")	200 mm (7.87")	G4	
• Wetted parts materials: Hastelloy C276			
Range	Standard length		
20 ... 50 mm (0.79 ... 1.97")	50 mm (1.97")	J1	
51 ... 100 mm (2.01 ... 3.94")	100 mm (3.94")	J2	
101 ... 150 mm (3.98 ... 5.91")	150 mm (5.91")	J3	
151 ... 200 mm (5.94 ... 7.87")	200 mm (7.87")	J4	
• Wetted parts materials: Tantalum			
Range	Standard length		
20 ... 50 mm (0.79 ... 1.97")	50 mm (1.97")	K1	
51 ... 100 mm (2.01 ... 3.94")	100 mm (3.94")	K2	
101 ... 150 mm (3.98 ... 5.91")	150 mm (5.91")	K3	
151 ... 200 mm (5.94 ... 7.87")	200 mm (7.87")	K4	
Filling liquid			
• Silicone oil M5		1	
• Silicone oil M50		2	
• High-temperature oil		3	
• Halocarbon oil (for O_2-measurement)[2]		4	
• Food oil (FDA-listed)		7	
Other version, add Order code and plain text: filling liquid: ...		9	M1Y

[1] For vacuum on request

[2] Oil and grease-free cleaning according to DIN 25410, level 2, and packaging included in scope of delivery. Refer to "Further designs" C10 and E10.

© Siemens 2020

Selection and Ordering data	Order code	HART	PA	FF
Further designs				
Add "**-Z**" to Article No. and specify Order code.				
Customer-specific tubus length Select range, enter desired length in plain text (No entry = standard length)	**Y44**	✓	✓	✓
Spark arrester For mounting on zone 0 (incl. documentation)	**A01**	✓	✓	✓
Remote seal nameplate attached out of stainless steel, contains Article No. and order number of the remote seal supplier	**B20**	✓	✓	✓
Oil- and grease-free cleaned version Oil- and grease-free cleaned and packed version, not for oxygen application, only in conjunction with halocarbon oil fill fluid, certified by certificate acc. to EN 10204-2.2	**C10**	✓	✓	✓
Quality test certificate, 5-point factory calibration (IEC 60770-2)	**C11**	✓	✓	✓
Inspection certificate Acc. to EN 10204-3.1	**C12**	✓	✓	✓
2.2 Certificate of FDA approval of fill oil Only in conjunction with filling liquid "Food oil" (FDA listed)"	**C17**	✓	✓	✓
"Functional safety (SIL2)" certificate to IEC 61508 (only for conjunction with the Order code "C20" in the case of SITRANS P DS III transmitter)	**C20**	✓	✓	
"Functional safety (SIL2/3)" certificate to IEC 61508 (only for conjunction with the Order code "C23" in the case of SITRANS P DS III transmitter)	**C23**	✓	✓	
Certification acc. to NACE MR-0175 Includes inspection certificate 3.1 acc. to EN 10204 (only for wetted parts made of stainless steel 1.4404/316L and Hastelloy C276)	**D07**	✓	✓	✓
Certification acc. to NACE MR-0103 Includes inspection certificate 3.1 acc. to EN 10204 (only for wetted parts made of stainless steel 1.4404/316L and Hastelloy C276)	**D08**	✓	✓	✓
Oil- and grease-free cleaned version Oil- and grease-free cleaned and packed version, only for oxygen application, only inert fill fluid may be used. Max. temperature: 60 °C (140 °F), max. pressure 50 bar (725 psi), only in connection with halocarbon oil, certified by certificate acc. to EN 10204-2.2	**E10**	✓	✓	✓
Epoxy painting Not possible with negative pressure service Color: transparent, coverage: front and rear of the remote seal, capillary(ies) or connecting tube, process connection of the transmitter. With transmitters 7MF40.. and 7MF42.., only possible with process connection G½B according to EN 837-1.	**E15**	✓	✓	✓

Selection and Ordering data	Order code	HART	PA	FF
Further designs				
Add "**-Z**" to Article No. and specify Order code.				
One sided-mounting, sealing surface below	**H20**			
Sealing surface smooth, form B2 or RFSF (Stainless steel diaphragm) previously DIN 2501, form E	**J11**	✓	✓	✓
Sealing surface groove, EN 1092-1, form D instead of sealing surface B1 (only for wetted parts made of stainless steel 316L)	**J14**	✓	✓	✓
Sealing surface with spring according to EN 1092-1, form F, (previously DIN 2512, form F) in stainless steel 316L				
DN 25	**J30**	✓	✓	✓
DN 40	**J31**	✓	✓	✓
DN 50	**J32**	✓	✓	✓
DN 80	**J33**	✓	✓	✓
DN 100	**J34**	✓	✓	✓
DN 125	**J35**	✓	✓	✓
Sealing surface with male face according to EN 1092-1, form E (previously DIN 2512, form V13) in stainless steel 316L				
DN 25	**J40**	✓	✓	✓
DN 40	**J41**	✓	✓	✓
DN 50	**J42**	✓	✓	✓
DN 80	**J43**	✓	✓	✓
DN 100	**J44**	✓	✓	✓
DN 125	**J45**	✓	✓	✓
Sealing surface with female face according to EN 1092-1, form F (previously DIN 2512, form R13) in stainless steel 316L				
DN 25	**J50**	✓	✓	✓
DN 40	**J51**	✓	✓	✓
DN 50	**J52**	✓	✓	✓
DN 80	**J53**	✓	✓	✓
DN 100	**J54**	✓	✓	✓
DN 125	**J55**	✓	✓	✓
Sealing surface B1 or ASME B16.5 RF 125 ... 250 AA instead of sealing surface B2 or RFSF (only for wetted parts made of Hastelloy C276 (2.4819), tantalum and Duplex 2205 (1.4462) and for nominal sizes 2", 3", DN 50 and DN 80)	**J12**	✓	✓	✓
Sealing surface RJF (groove, previously RTJ) ASME B16.5 instead of sealing surface ASME B16.5 RF 125 ... 250 AA (only for wetted parts made of stainless steel 316L)	**J24**	✓	✓	✓
Elongated pipe, 150 mm instead of 100 mm, max. medium temperature 250 °C, observe the maximum permissible media temperature of the filling liquid.	**R15**	✓	✓	✓
Elongated pipe, 200 mm instead of 100 mm, max. medium temperature 300 °C, observe the maximum permissible media temperature of the filling liquid.	**R20**	✓	✓	✓
Negative pressure service for use in the low-pressure measuring range for transmitter for level Note: suffix "Y01" required with pressure transmitter	**V04**	✓	✓	✓
Extended negative pressure service for use in the low-pressure measuring range for transmitter for level Note: suffix "Y01" required with pressure transmitter	**V54**	✓	✓	✓

✓ = available

© Siemens 2020

Dimensional drawings

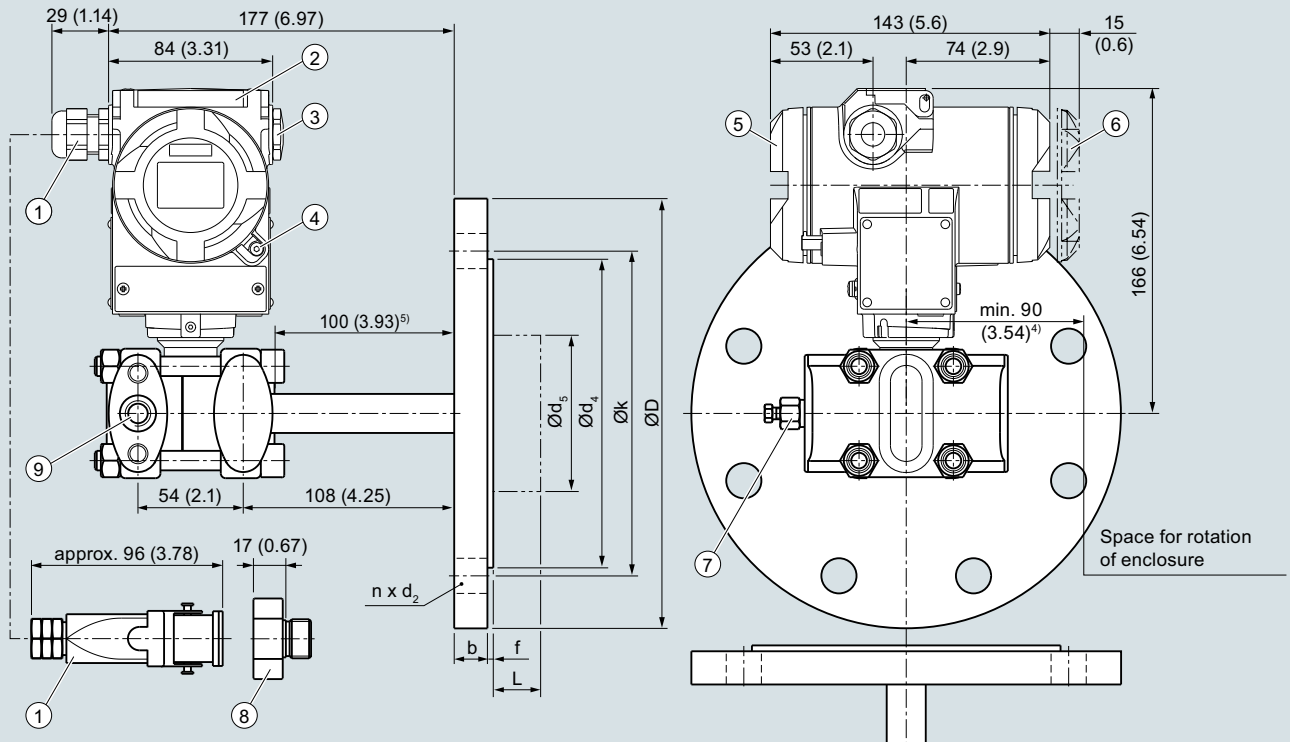

1. Electrical connection:
   Screwed gland M20 x 1,5 or Screwed gland ½-14 NPT or
   Han 7D/8D device plug[2) 3)]
2. Protective cover over keys
3. Blanking plug
4. Screw cover - safety bracket (only for type of protection "Explosion-proof enclosure", not shown in the drawing)
5. Terminal side[1)]
6. Electronic side, digital display
   (longer overall length for cover with window)[1)]
7. Sealing screw with valve (option)
8. Harting adapter
9. Process connection of low pressure side ¼-18 NPT (IEC 61518)

1) Allow approx. 20 mm (0.79 inch) thread length to permit unscrewing
2) Not with type of protection "Explosion-proof enclosure"
3) Not with type of protection "FM + CSA" [IS + XP]"
4) 92 mm (3.62 inch) for minimum distance to permit rotation with indicator
5) 150 (5.9) with Order Code R15, 200 (7.87) with Order Code R20

SITRANS P DS III with HART pressure transmitters for level, including mounting flange, dimensions in mm (inch)

© Siemens 2020

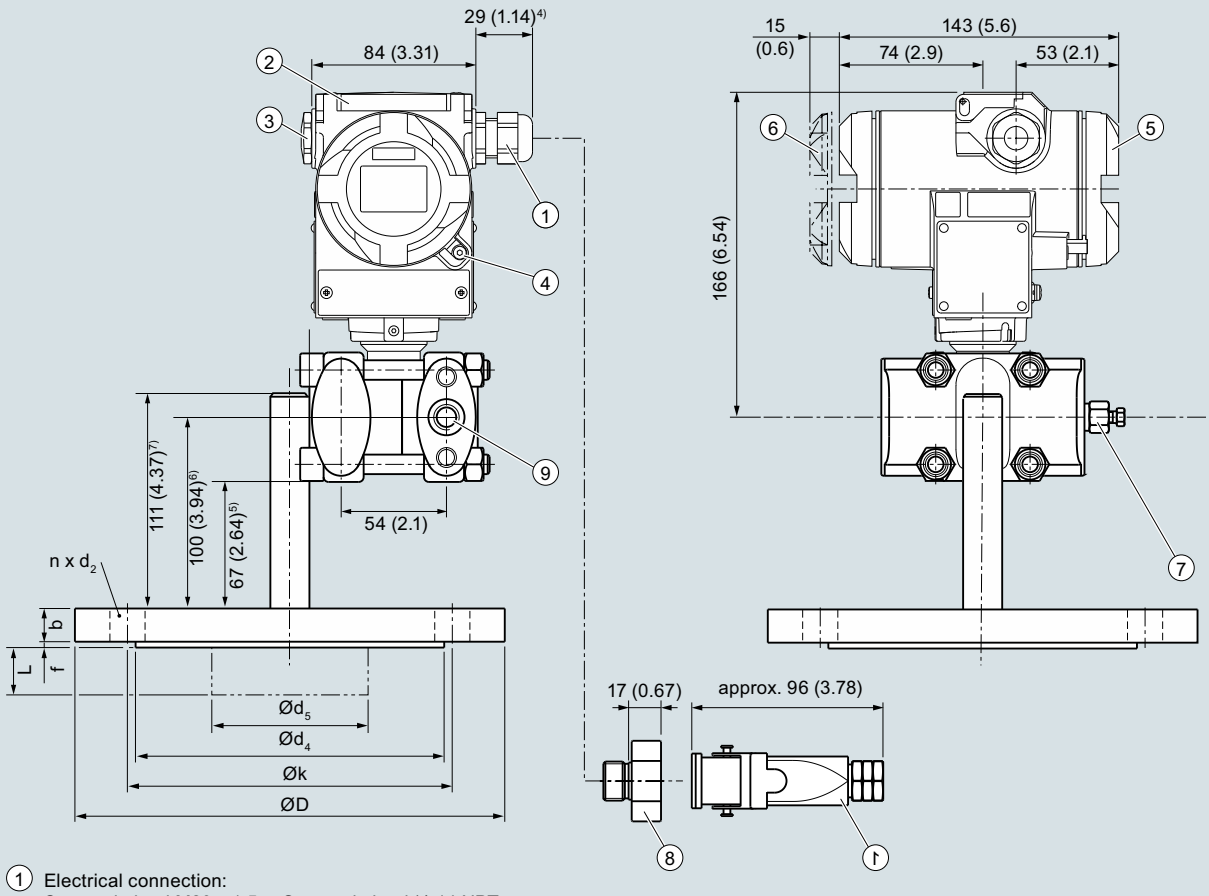

1. Electrical connection:
   Screwed gland M20 x 1,5 or Screwed gland ½-14 NPT or
   Han 7D/8D device plug[2) 3)]
2. Protective cover over keys
3. Blanking plug
4. Screw cover - safety bracket (only for type of protection "Explosion-proof enclosure", not shown in the drawing)
5. Terminal side[1)]
6. Electronic side, digital display
   (longer overall length for cover with window)[1)]
7. Sealing screw with valve (option)
8. Harting adapter
9. Process connection of low pressure side ¼-18 NPT (IEC 61518)

1) Allow approx. 20 mm (0.79 inch) thread length to permit unscrewing
2) Not with type of protection "Explosion-proof enclosure"
3) Not with type of protection "FM + CSA" [IS + XP]"
4) For Pg 13,5 with adapter approx. 45 mm (1.77 inch)
5) 117 (4.61) with Order Code R15, 167 (6.57) with Order Code R20
6) 150 (5.19) with Order Code R15, 200 (7.87) with Order Code R20
7) 161 (6.34) with Order Code R15, 211 (8.31) with Order Code R20

SITRANS P DS III with HART pressure transmitters for level, including mounting flange, one sided-mounting, sealing surface below (order code H20), dimensions in mm (inch)

© Siemens 2020

Connection to EN 1092-1

Nominal diameter	Nominal pressure	b	D	d	d_2	d_4	d_5	d_M	f	k	n	L
		mm	mm	mm	mm	mm	mm	mm	mm	mm	mm	mm
DN 50	PN 10/16/ 25/40	20	165	90	18	102	48.3	45[1)]	2	125	4	0, 50, 100, 150 or 200
	PN 100	28	195	90	26	102	48.3	45[1)]	2	145	8	
DN 80	PN 10/16/ 25/40	24	200	90	18	138	76	72[2)]	2	160	8	
	PN 100	32	230	90	26	138	76	72[2)]	2	180	8	
DN 100	PN 10/16	20	220	115	18	158	94	89	2	180	8	
	PN 25/40	24	235	115	22	162	94	89	2	190	8	

Connection to ASME B16.5

Nominal diameter	Nominal pressure	b	D	d_2	d_4	d_5	d_M	f	k	n	L
	lb./sq.in	inch (mm)	inch (mm)	inch (mm)	inch (mm)	inch (mm)	inch (mm)	inch (mm)	inch (mm)		inch (mm)
2 inch	150	0.77 (19.5)	5.91 (150)	0.79 (20)	3.62 (92)	1.9 (48.3)	1.77[1)] (45)	0.08 (2)	4.74 (120.5)	4	0, 2, 3.94, 5.94 or 7.87 (0, 50, 100, 150 or 200)
	300	0.89 (22.7)	6.5 (165)	0.79 (20)	3.62 (92)	1.9 (48.3)	1.77[1)] (45)	0.08 (2)	5 (127)	8	
	400/600	1.28 (32.4)	6.5 (165)	0.79 (20)	3.62 (92)	1.9 (48.3)	1.77[1)] (45)	0.28 (7)	5 (127)	8	
	900/1500	1.78 (45.1)	8.46 (215)	1.02 (26)	5 (127)	1.9 (48.3)	1.77[1)] (45)	0.28 (7)	6.5 (165)	8	
3 inch	150	0.96 (24.3)	7.48 (190)	0.79 (20)	5 (127)	3 (76)	2.83[2)] (72)	0.08 (2)	6 (152.5)	4	
	300	1.14 (29)	8.27 (210)	0.87 (22)	5 (127)	3 (76)	2.83[2)] (72)	0.08 (2)	6.63 (168.5)	8	
	600	1.53 (38.8)	8.27 (210)	0.87 (22)	5 (127)	3 (76)	2.83[2)] (72)	0.28 (7)	6.63 (168.5)	8	
4 inch	150	0.96 (24.3)	9.06 (230)	0.79 (20)	6.22 (158)	3.69 (94)	3.5 (89)	0.08 (2)	7.5 (190.5)	8	
	300	1.27 (32.2)	10.04 (255)	0.87 (22)	6.22 (158)	3.69 (94)	3.5 (89)	0.08 (2)	7.87 (200)	8	
	400	1.65 (42)	10.04 (255)	1.02 (26)	6.22 (158)	3.69 (94)	3.5 (89)	0.28 (7)	7.87 (200)	8	

d: Internal diameter of gasket to DIN 2690
d_M: Effective diaphragm diameter

1) 59 mm = 2.32 inch with tube length L=0.

2) 89 mm = 3½ inch with tube length L=0.

© Siemens 2020

Selection and Ordering data		Article No.
Replacement measuring cell for pressure for SITRANS P DS III ↗		**7MF4990-** ■■■■**0-0DB0**
↗ Click on the Article No. for the online configuration in the PIA Life Cycle Portal.		
Measuring cell filling	**Measuring cell cleaning**	
Silicone oil	Normal	**1**
Inert liquid	grease-free to cleanliness level 2	**3**
Measured span (min. ... max.)		
8.3 ... 250 mbar	(0.12 ... 3.6 psi)	**A**
0.01 ... 1 bar	(0.15 ... 14.5 psi)	**B**
0.04 ... 4 bar	(0.6 ... 58 psi)	**C**
0.16 ... 16 bar	(2.32 ... 232 psi)	**D**
0.63 ... 63 bar	(9.14 ... 914 psi)	**E**
1.6 ... 160 bar	(23.2 ... 2 320 psi)	**F**
4.0 ... 400 bar	(58.0 ... 5 802 psi)	**G**
7.0 ... 700 bar	(102.0 ... 10 153 psi)	**J**
Wetted parts materials		
Seal diaphragm	Process connection	
Stainless steel	Stainless steel	**A**
Hastelloy	Stainless steel	**B**
Hastelloy	Hastelloy	**C**
Process connection		
• Connection shank G½B to EN 837-1		**0**
• Female thread ½-14 NPT		**1**
• Oval flange made of stainless steel, max. measuring span 160 bar (2320 psi)		
- Mounting thread $^{7}/_{16}$-20 UNF to IEC 61518/DIN EN 61518		**2**
- Mounting thread M10 to DIN 19213		**3**
Further designs		Order code
Please add "**-Z**" to Article No. and specify Order code.		
Inspection certificate to EN 10204-3.1		**C12**

Selection and Ordering data		Article No.
Replacement measuring cell for absolute pressure for SITRANS P DS III (from the pressure series) ↗		**7MF4992-** ■■■■**0-0DB0**
↗ Click on the Article No. for the online configuration in the PIA Life Cycle Portal.		
Measuring cell filling	**Measuring cell cleaning**	
Silicone oil	Normal	**1**
Inert liquid	grease-free to cleanliness level 2	**3**
Measured span (min. ... max.)		
8.3 ... 250 mbar a	(0.12 ... 3.63 psi a)	**D**
43 ... 1300 mbar a	(0.62 ... 18.86 psi a)	**F**
0.16 ... 5 bar a	(2.32 ... 72.5 psi a)	**G**
1 ... 30 bar a	(14.5 ... 435 psi a)	**H**
Wetted parts materials		
Seal diaphragm	Process connection	
Stainless steel	Stainless steel	**A**
Hastelloy	Stainless steel	**B**
Hastelloy	Hastelloy	**C**
Process connection		
• Connection shank G½B to EN 837-1		**0**
• Female thread ½-14 NPT		**1**
• Oval flange made of stainless steel, max. measuring span 160 bar (2320 psi)		
- Mounting thread $^{7}/_{16}$-20 UNF to IEC 61518/DIN EN 61518		**2**
- Mounting thread M10 to DIN 19213		**3**
Further designs		Order code
Please add "**-Z**" to Article No. and specify Order code.		
Inspection certificate to EN 10204-3.1		**C12**

© Siemens 2020

Selection and Ordering data		Article No.
Replacement measuring cell for absolute pressure (from the differential pressure series) for SITRANS P DS III with HART, DS III with PROFIBUS PA and DS III with FOUNDATION Fieldbus series		7MF4993 - ■■■■■ - 0DC0
↗ Click on the Article No. for the online configuration in the PIA Life Cycle Portal.		
Measuring cell filling	**Measuring cell cleaning**	
Silicone oil	Normal	1
Inert liquid	grease-free to cleanliness level 2	3
Measured span (min. ... max.)		
8.3 ... 250 mbar a	(0.12 ... 3.63 psi a)	D
43 ... 1300 mbar a	(0.62 ... 18.86 psi a)	F
0.16 ... 5 bar a	(2.32 ... 72.5 psi a)	G
1 ... 30 bar a	(14.5 ... 435 psi a)	H
5.3 ... 100 bar a	(76.9 ... 1450 psi a)	K E
Wetted parts materials		
Seal diaphragm	Parts of measuring cell	
Stainless steel	Stainless steel	A
Hastelloy	Stainless steel	B
Hastelloy	Hastelloy	C
Tantalum	Tantalum	E
Monel	Monel	H
Gold	Gold	L
Process connection		
Female thread ¼-18 NPT with flange connection		
• Sealing screw opposite process connection		
- Mounting thread M10 to DIN 19213		0
- Mounting thread $^{7}/_{16}$-20 UNF to IEC 61518/DIN EN 61518		2
• Vent on side of process flange[1]		
- Mounting thread M10 to DIN 19213		4
- Mounting thread $^{7}/_{16}$-20 UNF to IEC 61518/DIN EN 61518		6
Non-wetted parts materials		
• Stainless steel process flange screws		2
Further designs		Order code
Please add "**-Z**" to Article No. and specify Order code.		
O-rings for process flanges (instead of FPM (Viton))		
• PTFE (Teflon)		A20
• FEP (with silicone core, approved for food)		A21
• FFPM (Kalrez, for measured medium temperatures -15 ... 100 °C (5 ... 212 °F))		A22
• NBR (Buna N)		A23
Inspection certificate to EN 10204-3.1		C12
Process connection G½B		D16
Remote seal flanges (not together with K01, K02 and K04)		D20
Vent on side for gas measurements		H02
Process flanges		
• without		K00
• with process flange made of		
- Hastelloy		K01
- Monel		K02
- Stainless steel with PVDF insert max. PN 10 (MAWP 145 psi) max.temperature of medium 90 °C (194 °F) For ½-14 NPT inner process connection on the side in the middle of the process flange, vent valve not possible		K04

1) Not for measuring span 5.3 ... 100 bar (76.9 ... 1450 psi)

Selection and Ordering data		Article No.
Replacement measuring cell for differential pressure and PN 32/160 (MAWP 464/2320 psi) for SITRANS P DS III with HART, DS III with PROFIBUS PA and DS III with FOUNDATION Fieldbus series		7MF4994 - ■■■■■ - 0DC0
↗ Click on the Article No. for the online configuration in the PIA Life Cycle Portal.		
Measuring cell filling	**Measuring cell cleaning**	
Silicone oil	Normal	1
Inert liquid	grease-free to cleanliness level 2	3
Measured span (min. ... max.)		
PN 32 (MAWP 464 psi)		
1 ... 20 mbar[1]	(0.4 ... 8 inH_2O)	B
PN 160 (MAWP 2320 psi)		
1 ... 60 mbar	(0.4 ... 24 inH_2O)	C
2.5 ... 250 mbar	(1 ... 100 inH_2O)	D
6 ... 600 mbar	(2.4 ... 240 inH_2O)	E
16 ... 1600 mbar	(6.4 ... 642 inH_2O)	F
50 ... 5000 mbar	(20 ... 2000 inH_2O)	G
0.3 ... 30 bar	(4.35 ... 435 psi)	H
Wetted parts materials (stainless steel process flanges)		
Seal diaphragm	Parts of measuring cell	
Stainless steel	Stainless steel	A
Hastelloy	Stainless steel	B
Hastelloy	Hastelloy	C
Tantalum[2]	Tantalum	E
Monel[2]	Monel	H
Gold[2]	Gold	L
Process connection		
Female thread ¼-18 NPT with flange connection		
• Sealing screw opposite process connection		
- Mounting thread M10 to DIN 19213		0
- Mounting thread $^{7}/_{16}$-20 UNF to IEC 61518/DIN EN 61518		2
• Vent on side of process flange		
- Mounting thread M10 to DIN 19213		4
- Mounting thread $^{7}/_{16}$-20 UNF to IEC 61518/DIN EN 61518		6
Non-wetted parts materials		
Stainless steel process flange screws		2
Further designs		Order code
Please add "**-Z**" to Article No. and specify Order code.		
O-rings for process flanges (instead of FPM (Viton))		
• PTFE (Teflon)		A20
• FEP (with silicone core, approved for food)		A21
• FFPM (Kalrez, for measured medium temperatures -15 ... 100 °C (5 ... 212 °F))		A22
• NBR (Buna N)		A23
Inspection certificate to EN 10204-3.1		C12
Remote seal flanges (not together with K01, K02 and K04)		D20
Vent on side for gas measurements		H02
Stainless steel process flanges for vertical differential pressure lines (not together with K01, K02 and K04)		H03
Process flanges		
• without		K00
• with process flange made of		
- Hastelloy		K01
- Monel		K02
- Stainless steel with PVDF insert, max. PN 10 (MAWP 145 psi), max. temperature of medium 90 °C (194 °F). For ½-14 NPT inner process connection on the side in the middle of the process flange, vent valve not possible		K04

1) Not suitable for connection of remote seal
2) Only together with max. measuring span 250, 1600, 5000 and 30000 mbar (100 inH_2O, 642 inH_2O, 2000 inH_2O and 435 psi).

© Siemens 2020

Selection and Ordering data		Article No.
Replacement measuring cell for differential pressure and PN 420 (MAWP 6092 psi) for SITRANS P DS III with HART, DS III with PROFIBUS PA and DS III with FOUNDATION Fieldbus series		↗ **7MF4995-** ■■■■■ **-0DC0**
↗ Click on the Article No. for the online configuration in the PIA Life Cycle Portal.		
Measuring cell filling	**Measuring cell cleaning**	
Silicone oil	Normal	**1**
Measured span (min. ... max.)		
2.5 ... 250 mbar	(1 ... 100 inH_2O)	**D**
6 ... 600 mbar	(2.4 ... 240 inH_2O)	**E**
16 ... 1600 mbar	(6.4 ... 642 inH_2O)	**F**
50 ... 5000 mbar	(20 ... 2000 inH_2O)	**G**
0.3 ... 30 bar	(4.35 ... 435 psi)	**H**
Wetted parts materials (stainless steel process flanges)		
Seal diaphragm	Parts of measuring cell	
Stainless steel	Stainless steel	**A**
Hastelloy	Stainless steel	**B**
Gold[1]	Gold	**L**
Process connection		
Female thread ¼-18 NPT with flange connection		
• Sealing screw opposite process connection		
- Mounting thread M12 to DIN 19213		**1**
- Mounting thread $^7/_{16}$-20 UNF to IEC 61518/DIN EN 61518		**3**
• Vent on side of process flange		
- Mounting thread M12 to DIN 19213		**5**
- Mounting thread $^7/_{16}$-20 UNF to IEC 61518/DIN EN 61518		**7**
Non-wetted parts materials		
• Stainless steel process flange screws		**2**
Further designs		Order code
Please add "**-Z**" to Article No. and specify Order code.		
O-rings for process flanges (instead of FPM (Viton))		
• PTFE (Teflon)		**A20**
• FEP (with silicone core, approved for food)		**A21**
• FFPM (Kalrez, for measured medium temperatures -15 ... 100 °C (5 ... 212 °F))		**A22**
• NBR (Buna N)		**A23**
Inspection certificate to EN 10204-3.1		**C12**
Stainless steel process flanges for vertical differential pressure lines		**H03**
without process flanges		**K00**

[1] Not together with max. measuring span 600 mbar (240 inH_2O)

© Siemens 2020

Selection and Ordering data	Article No.
Spare parts/Accessories	
Mounting bracket and fastening parts for pressure transmitters SITRANS P DS III with HART, DS III with PROFIBUS PA and DS III with FOUNDATION Fieldbus (7MF403.-.....-..C.) For absolute pressure transmitters SITRANS P DS III with HART, DS III with PROFIBUS PA and DS III with FOUNDATION Fieldbus (7MF423.-.....-..C.)	
• made of steel	**7MF4997-1AB**
• made of stainless steel 304/1.4301	**7MF4997-1AH**
• made of stainless steel 316L/1.4404	**7MF4997-1AP**
Mounting bracket and fastening parts for pressure transmitters SITRANS P DS III with HART, DS III with PROFIBUS PA and DS III with FOUNDATION Fieldbus (7MF403-.....-..A., -..B., ..D. and ..F.) For absolute pressure transmitters SITRANS P DS III with HART, DS III with PROFIBUS PA and DS III with FOUNDATION Fieldbus 7MF423-.....-..A., -..B., ..D. and ..F.)	
• made of steel	**7MF4997-1AC**
• made of stainless steel 304/1.4301	**7MF4997-1AJ**
• made of stainless steel 316L/1.4404	**7MF4997-1AQ**
Mounting and fastening brackets For differential pressure transmitters with flange thread M10 SITRANS P DS III with HART, DS III with PROFIBUS PA and DS III with FOUNDATION Fieldbus (7MF433.-... and 7MF443.-...)	
• made of steel	**7MF4997-1AD**
• made of stainless steel 304/1.4301	**7MF4997-1AK**
• made of stainless steel 316L/1.4404	**7MF4997-1AR**
Mounting and fastening brackets For differential pressure transmitters with flange thread M12 SITRANS P DS III with HART, DS III with PROFIBUS PA and DS III with FOUNDATION Fieldbus (7MF453.-...)	
• made of steel	**7MF4997-1AE**
• made of stainless steel 304/1.4301	**7MF4997-1AL**
• made of stainless steel 316L/1.4404	**7MF4997-1AS**
Mounting and fastening brackets For differential and absolute pressure transmitters with flange thread 7/16 -20 UNF SITRANS P DS III with HART, DS III with PROFIBUS PA and DS III with FOUNDATION Fieldbus (7MF433.-..., 7MF443.-... and 7MF453.-...)	
• made of steel	**7MF4997-1AF**
• made of stainless steel 304/1.4301	**7MF4997-1AM**
• made of stainless steel 316L/1.4404	**7MF4997-1AT**
Cover Made of die-cast aluminum, including gasket, for SITRANS P DS III with HART, DS III with PROFIBUS PA and DS III with FOUNDATION Fieldbus. Compatible for Ex and non-Ex transmitters	
• without window	**7MF4997-1BB**
• with window	**7MF4997-1BE**
Cover Made of stainless steel, including gasket, for SITRANS P DS III with HART, DS III with PROFIBUS PA and DS III with FOUNDATION Fieldbus. Compatible for Ex and non-Ex transmitters	
• without window	**7MF4997-1BC**
• with window	**7MF4997-1BF**

Selection and Ordering data	Article No.
Digital indicator Including mounting material for SITRANS P DS III with HART, DS III with PROFIBUS PA and DS III with FOUNDATION Fieldbus	**7MF4997-1BR**
Measuring point label	
• without inscription (5 units)	**7MF4997-1CA**
• Printed (1 unit) Data according to Y01 or Y02, Y15, Y16 and Y99 (see "Pressure transmitters")	**7MF4997-1CB-Z** **Y..: .....**
Mounting screws For measuring point label, grounding and connection terminals or for display (50 units)	**7MF4997-1CD**
Sealing screws (1 set = 2 units) for process flange	
• made of stainless steel	**7MF4997-1CG**
• made of Hastelloy	**7MF4997-1CH**
Sealing screws with vent valve Complete (1 set = 2 units)	
• made of stainless steel	**7MF4997-1CP**
• made of Hastelloy	**7MF4997-1CQ**
Application electronics	
• for SITRANS P DS III with HART	**7MF4997-1DK**
• for SITRANS P DS III with PROFIBUS PA	**7MF4997-1DL**
• for SITRANS P DS III with FOUNDATION Fieldbus	**7MF4997-1DM**
Connection board	
• for SITRANS P DS III	**7MF4997-1DN**
• for SITRANS P DS III PROFIBUS PA and FOUNDATION Fieldbus	**7MF4997-1DP**
O-rings for process flanges made of:	
• FPM (Viton)	**7MF4997-2DA**
• PTFE (Teflon)	**7MF4997-2DB**
• FEP (with silicone core, approved for food)	**7MF4997-2DC**
• FFPM (Kalrez)	**7MF4997-2DD**
• NBR (Buna N)	**7MF4997-2DE**
Sealing ring for process connection	**see "Fittings"**
Weldable sockets for PMC connection	
• PMC Style Standard: Thread 1½"	**7MF4997-2HA**
• PMC Style Minibolt: front-flush 1"	**7MF4997-2HB**
Gaskets for PMC connection (packing unit = 5 units)	
• PTFE seal for PMC Style Standard: Thread 1½"	**7MF4997-2HC**
• Gasket made of Viton for PMC Style Minibolt: front-flush 1"	**7MF4997-2HD**
Weldable socket for TG52/50 and TG52/150 connection	
• TG52/50 connection	**7MF4997-2HE**
• TG52/150 connection	**7MF4997-2HF**
Seals for TG 52/50 and TG 52/150 made of silicone (FDA compliant)	**7MF4997-2HG**
Seals for flange connection with front-flush diaphragm M;aterial FKM (Viton); temperature range: -20 ... +200 °C (-4 ... +392 °F), 10 units	
• DN 25, PN 40 (M11)	**7MF4997-2HH**
• 1", class 150 (M40)	**7MF4997-2HK**

© Siemens 2020

Selection and Ordering data	Article No.
Documentation	
The entire documentation is available for download free-of-charge in various languages at: http://www.siemens.com/processinstrumentation/documentation	
Compact operating instructions SITRANS P DS III/P410	
• English, German, Spanish, French, Italian, Dutch	**A5E03434626**
Certificates (order only via SAP) instead of Internet download	
• hard copy (to order)	**A5E03252406**
• on DVD (to order)	**A5E03252407**
HART modem	
with USB interface	**7MF4997-1DB**

Power supply units see Chap. 7 "Supplementary Components".

© Siemens 2020

Dimensional drawings

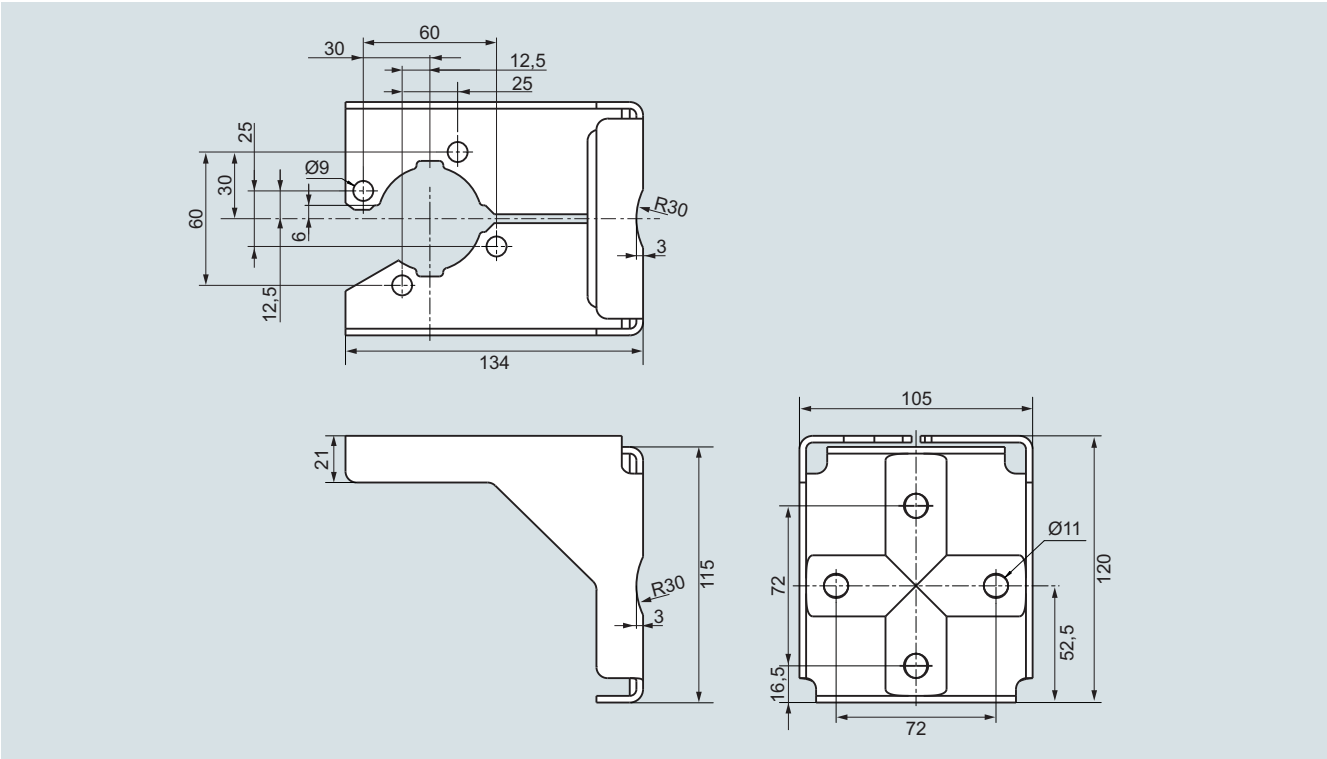

Mounting bracket for SITRANS P DS III, SITRANS P410 gauge and absolute pressure-transmitters, dimensions in mm
mounting bracket material: Sheet-steel Mat. No. 1.0330, chrome-plated, or stainless steel Mat. No. 1.4301 (304)

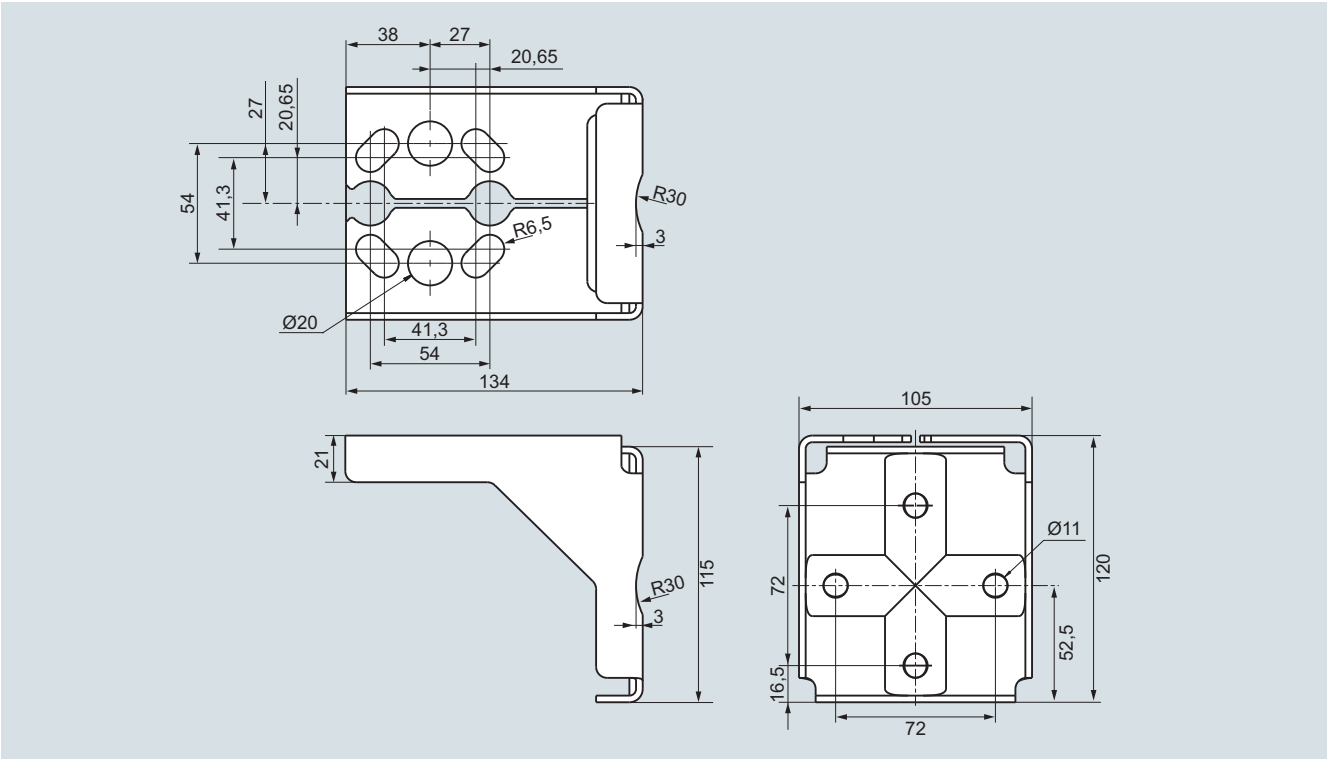

Mounting bracket for SITRANS P DS III and SITRANS P410 differential pressure transmitter, dimensions in mm
mounting bracket material: Sheet-steel Mat. No. 1.0330, chrome-plated, or stainless steel Mat. No. 1.4301 (304)

© Siemens 2020

Overview

SITRANS P transmitters

- DS III for relative and absolute pressure (both designs) and
- DS III for differential pressure

can be delivered factory-fitted with the following valve manifolds:

- 7MF9011-4EA and 7MF9011-4FA valve manifolds for gauge pressure and absolute pressure transmitters
- 7MF9411-5BA and 7MF9411-5CA valve manifolds for absolute pressure and differential pressure transmitters

Design

The 7MF9011-4EA valve manifolds are sealed with PTFE gaskets between the transmitter and the valve manifold as standard. Soft iron, stainless steel and copper gaskets are also available for sealing purposes if preferred.

The 7MF9011-4FA valve manifolds are sealed with PTFE sealing tape between the transmitter and the valve manifold.

The 7MF9411-5BA and 7MF9411-5CA valve manifolds are sealed with PTFE gaskets between the transmitter and the valve manifold.

The complete unit is checked for leaks under pressure after assembly (air pressure 6 bar (87 psi)) and certified with a factory certificate according to EN 10204 - 2.2.

All valve manifolds should preferably be secured with the corresponding mounting brackets. The transmitters are mounted on the valve manifold and not on the unit itself.

If you order a mounting bracket when choosing the option "Factory mounting of valve manifolds", you will receive a mounting bracket for the valve manifold instead of a bracket for mounting the transmitter.

If you order an inspection certificate 3.1 according to EN 10204 after choosing the option "Factory mounting of valve manifolds", a separate certificate is provided for the transmitter and for the valve manifold.

Selection and Ordering data

7MF9411-5AA
valve manifold for relative and absolute pressure transmitters

Add „**-Z**" to the Article No. of the transmitter and add order codes.	Order code
SITRANS P DSIII 7MF403.-...2.-..., 7MF423.-...2.-... , 7MF403.-...3.-..., 7MF423.-...3.-... , 7MF403.-...4.-..., 7MF423.-...4.-... With process connection oval flange with PTFE gasket and **steel** mounting screws. Delivery including high-presure test certified by factory certificate according to EN 10204-2.2	**T05**
Additional versions:	
Delivery includes mounting brackets and mounting clips made of stainless steel (instead of the mounting bracket supplied with the transmitter)	**A02**
Inspection certificate according to EN 10204-3.1 supplied for transmitters and mounted valve manifold	**C12**
With manufacturer declaration according to NACE, MR-0175	**D07**

7MF9411-5AA
valve manifold for relative and absolute pressure transmitters

Add „**-Z**" to the Article No. of the transmitter and add order codes.	Order code
SITRANS P DSIII 7MF403.-...2.-..., 7MF423.-...2.-... , 7MF403.-...3.-..., 7MF423.-...3.-... , 7MF403.-...4.-..., 7MF423.-...4.-... With process connection oval flange with PTFE gasket and **stainless steel** mounting screws. Delivery including high-presure test certified by factory certificate according to EN 10204-2.2	**T06**
Additional versions:	
Delivery includes mounting brackets and mounting clips made of stainless steel (instead of the mounting bracket supplied with the transmitter)	**A02**
Inspection certificate according to EN 10204-3.1 supplied for transmitters and mounted valve manifold	**C12**
With manufacturer declaration according to NACE, MR-0175	**D07**

© Siemens 2020

Factory-mounting of valve manifolds on transmitters

7MF9011-4FA
valve manifold on relative and absolute pressure transmitters

Add **-Z** to the Article No. of the transmitter and add Order codes	Order code
SITRANS P DSIII 7MF403.-...1.-..., 7MF423.-...1.-... With process connection female thread ½-14 NPT in-sealed with PTFE sealing tape Delivery incl. high-pressure test certified by factory certificate according to EN 10204-2.2	**T03**
Further designs: Delivery includes mounting brackets and mounting clips made of stainless steel (instead of the mounting bracket supplied with the transmitter)	**A02**
Inspection certificate according to EN 10204-3.1 supplied for transmitters and mounted valve manifold	**C12**
With manufacturer declaration according to NACE, MR-0175	**D07**

7MF9011-4EA
valve manifold on relative and absolute pressure transmitters

Add **-Z** to the Article No. of the transmitter and add Order codes	Order code
SITRANS P DSIII 7MF403.-...0.-..., 7MF423.-...0.-... with process connection collar G1/2 A to EN 837-1 with gasket made of PTFE between valve manifold and transmitter	**T02**
Alternative sealing material: • Soft iron • Stainless steel, Mat. No. 14571 • copper Delivery incl. high-pressure test certified by factory certificate according to EN 10204-2.2	 **A70** **A71** **A72**
Further designs: Delivery includes mounting brackets and mounting clips made of stainless steel (instead of the mounting bracket supplied with the transmitter)	**A02**
Inspection certificate according to EN 10204-3.1 supplied for transmitters and mounted valve manifold	**C12**
With manufacturer declaration according to NACE, MR-0175	**D07**

7MF9411-5BA
valve manifold on absolute and differential pressure transmitters

Add **-Z** to the Article No. of the transmitter and add Order codes	Order code
SITRANS P DSIII 7MF433.-…, 7MF443.-… and 7MF453.-… [1] mounted with gaskets made of PTFE and screws made of • chromized steel • made of stainless steel Delivery incl. high-pressure test certified by factory certificate according to EN 10204-2.2	 **U01** **U02**
Further designs: Delivery includes mounting bracket and mounting clips made of • Steel • Stainless steel (instead of the mounting bracket supplied with the transmitter)	 **A01** **A02**
Inspection certificate according to EN 10204-3.1 supplied for transmitters and mounted valve manifold	**C12**
With manufacturer declaration according to NACE, MR-0175	**D07**

7MF9411-5CA
valve manifold on differential pressure transmitters

Add **-Z** to the Article No. of the transmitter and add Order codes	Order code
SITRANS P DSIII 7MF443.-... and 7MF453.-…1 [1] mounted with gaskets made of PTFE and screws made of • chromized steel • Stainless steel Delivery incl. high-pressure test certified by factory certificate according to EN 10204-2.2	 **U03** **U04**
Further designs: Delivery includes mounting bracket and mounting clips made of • Steel • Stainless steel (instead of the mounting bracket supplied with the transmitter)	 **A01** **A02**
Inspection certificate according to EN 10204-3.1 supplied for transmitters and mounted valve manifold	**C12**
With manufacturer declaration according to NACE, MR-0175	**D07**

[1] For 7MF453.-... transmitters, you require a 7/10-20 UNF connection thread in the process flange

© Siemens 2020

Dimensional drawings

Valve manifolds mounted on SITRANS P DS III

7MF9011-4EA valve manifold with mounted gauge pressure and absolute pressure transmitters

7MF9011-4FA valve manifold with mounted gauge pressure and absolute pressure transmitters

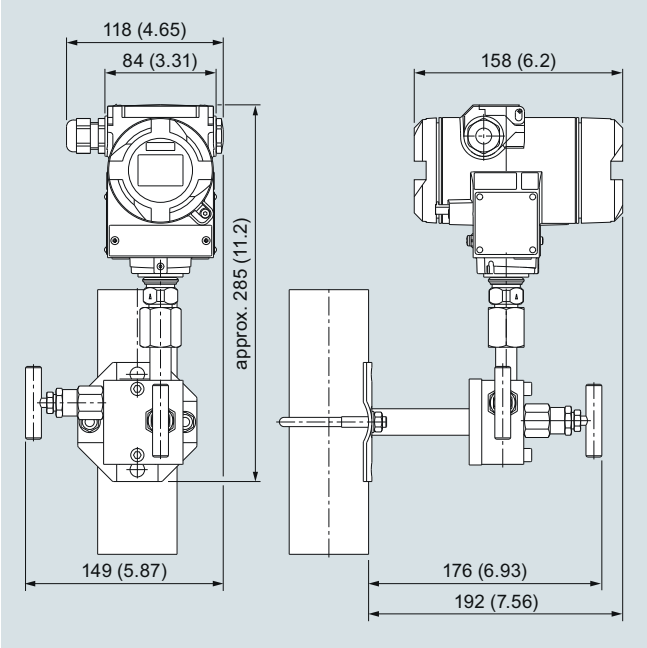

7MF9011-4EA valve manifold with mounted gauge pressure and absolute pressure transmitters, dimensions in mm (inch)

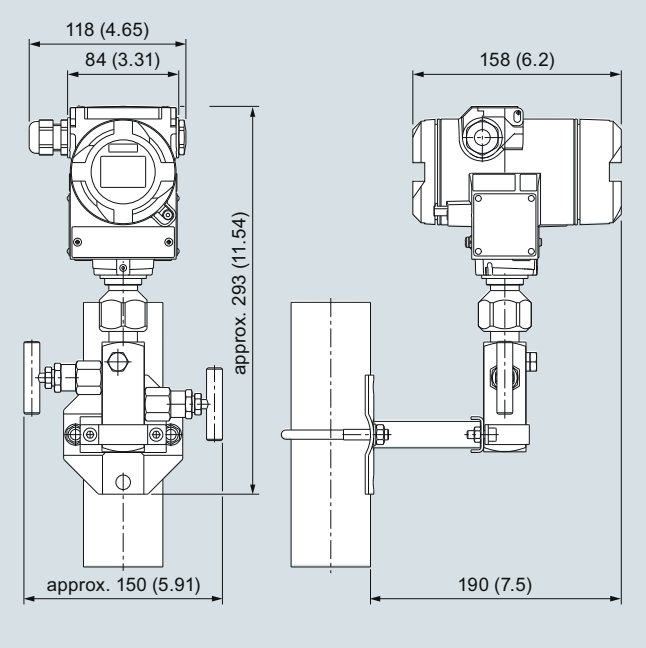

7MF9011-4FA valve manifold with mounted gauge pressure and absolute pressure transmitters, dimensions in mm (inch)

© Siemens 2020

Factory-mounting of valve manifolds on transmitters

7MF9411-5BA valve manifold with mounted differential pressure transmitter

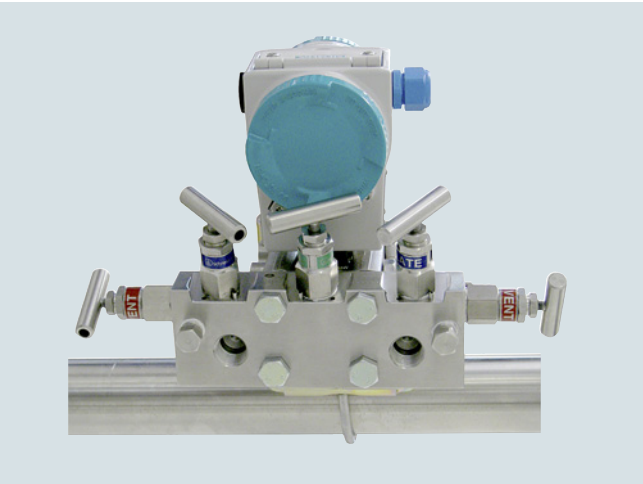

7MF9411-5CA valve manifold with mounted differential pressure transmitter

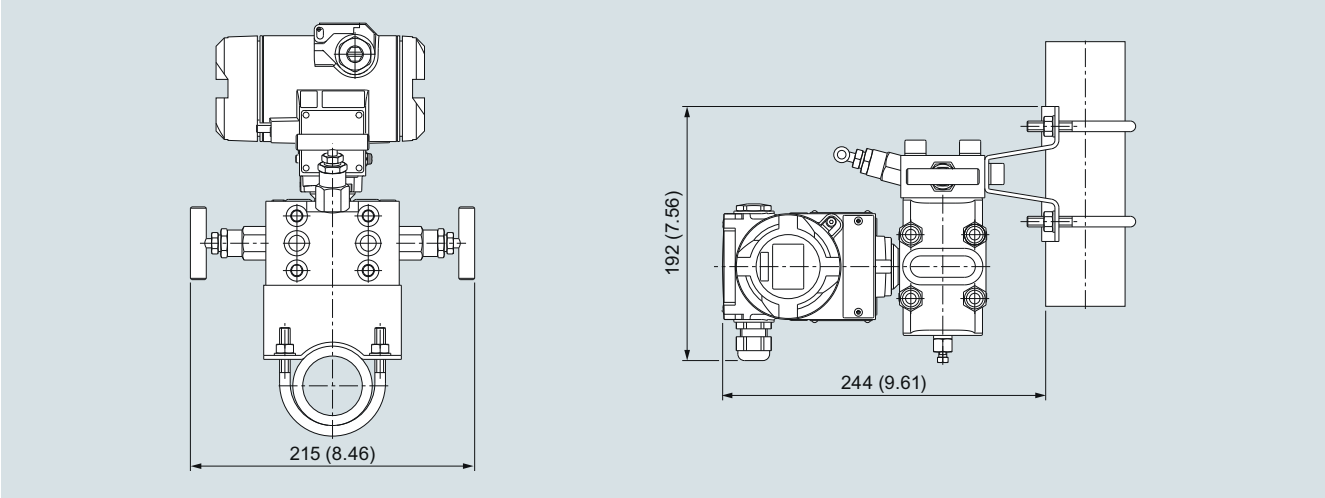

7MF9411-5BA valve manifold with mounted differential pressure transmitter, dimensions in mm (inch)

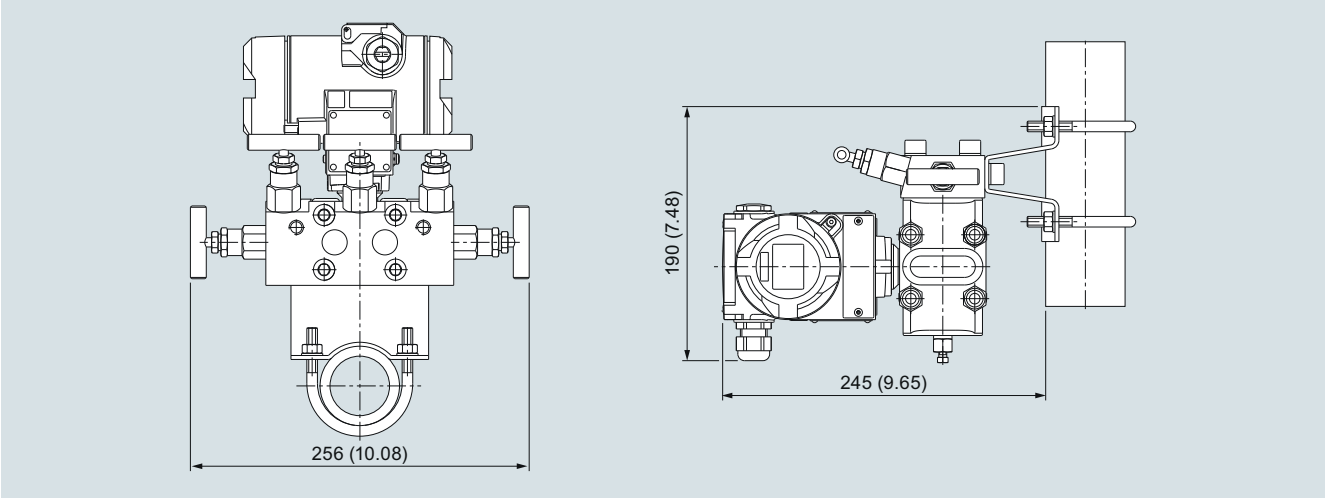

7MF9411-5CA valve manifold with mounted differential pressure transmitter, dimensions in mm (inch)

© Siemens 2020

Overview

SITRANS P410 pressure transmitters are digital pressure transmitters with a high level of operating convenience. Technically, they are based on the SITRANS P DS III but offer an increased measuring accuracy of 0.04%. This means the SITRANS P 410 is perfectly suited for measuring tasks with increased accuracy requirements. The parameterization is performed using input buttons or via HART or via PROFIBUS PA or FOUNDATION Fieldbus interface.

The comprehensive functionality makes for precise adjustment of the pressure transmitter to the requirements of the plant. Operation is very simple, despite the variety of setting options.

Pressure transmitters with type of protection "Intrinsic safety" and "Explosion-proof" may be installed in hazardous areas (zone 1) or in zone 0. The transmitters are provided with an EC type examination certificate and comply with the respective harmonized European standards (ATEX).

The transmitters can be equipped with various designs of remote seals for special applications such as the measurement of highly viscous substances.

SITRANS P410 pressure transmitters are available in various versions for measuring:

- Gauge pressure
- Differential pressure
- Volume flow
- Mass flow

Benefits

- High quality and service life
- For aggressive and non-aggressive gases, vapors and liquids
- Extensive diagnostics and simulation functions
- Minimal conformity error
- Good long-term stability
- Wetted parts made of high-grade materials (e.g., stainless steel, Hastelloy)
- Infinitely adjustable measuring spans from 0.01 bar to 160 bar (0.15 psi to 2321 psi) for P410 with HART interface
- Nominal measuring ranges from 1 bar to 160 bar (14.5 psi to 2321 psi) for P410 with PROFIBUS PA and FOUNDATION Fieldbus interface
- High measuring accuracy
- Parameterization over input buttons and HART, PROFIBUS PA or FOUNDATION Fieldbus interface.

Application

SITRANS P410 pressure transmitters can be used in industrial areas with extreme chemical and mechanical loads. Electromagnetic compatibility in the range 10 kHz to 1 GHz makes the P410 suitable for locations with high electromagnetic emissions.

Pressure transmitters with type of protection "Flameproof enclosure" may be installed in hazardous areas (zone 1) or in zone 0. The pressure transmitters are provided with an EC type examination certificate and comply with the corresponding harmonized European standards (ATEX).

Pressure transmitters with the type of protection "Intrinsic safety" for use in zone 0 may be operated with power supply units of category "ia" and "ib".

The transmitters can be equipped with various designs of remote seals for special applications such as the measurement of highly viscous substances.

The pressure transmitter can be operated locally over 3 input buttons or programmed externally over HART or over PROFIBUS PA or FOUNDATION Fieldbus interface.

Pressure transmitter for gauge pressure

Measured variable: Gauge pressure of aggressive and non-aggressive gases, vapors and liquids.

Measuring span (infinitely adjustable)
for P410 with HART: 0.01 bar to 160 bar (0.15 psi to 2321 psi)

Nominal measuring range
for P410 with PROFIBUS PA and FOUNDATION Fieldbus:
1 bar to 160 bar (14.5 psi to 2321 psi)

Pressure transmitters for differential pressure and flow

Measured variables:

- Differential pressure
- Small positive or negative pressure
- Flow $q \sim \sqrt{\Delta p}$ (together with a primary differential pressure device (see Chapter "Flow Meters"))

Measuring span (infinitely adjustable)
for P410 with HART: 1 mbar ... 30 bar (0.0145 ... 435 psi)

Nominal measuring range
for P410 with PROFIBUS PA and FOUNDATION Fieldbus:
20 mbar ... 30 bar (0.29 ... 435 psi)

© Siemens 2020

Design

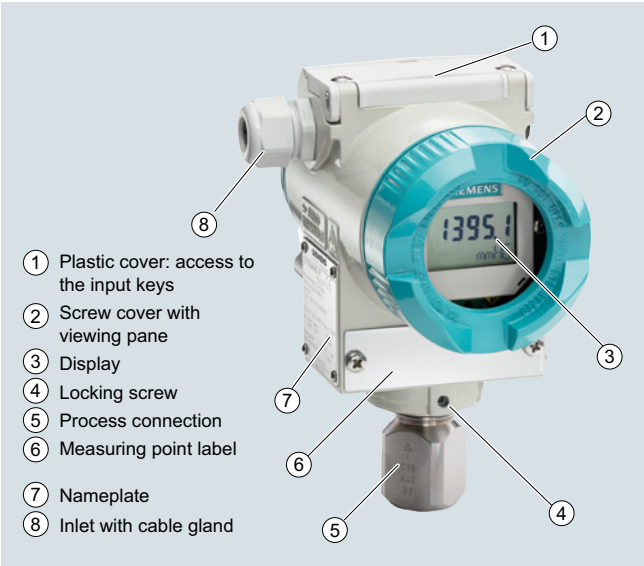

Front view

The transmitter consists of various components depending on the order. The possible versions are listed in the ordering information. The components described below are the same for all transmitters.

The rating plate (7, Figure "Front view") with the Article No. is located on the side of the enclosure. The specified number together with the ordering information provide details on the optional design details and on the possible measuring range (physical properties of built-in sensor element).

The approval label is located on the opposite side.

The enclosure is made of die-cast aluminium or stainless steel precision casting. A round cover (6) is screwed on at the front and rear of the enclosure. The front cover can be fitted with a viewing pane so that the measured values can be read directly on the display. The inlet (8) for the electrical connection is located either on the left or right side. The unused opening on the opposite side is sealed by a blanking plug. The protective earth connection is located on the rear of the enclosure.

The electrical connections for the power supply and screen are accessible by unscrewing the rear cover. The bottom part of the enclosure contains the measuring cell with process connection (5). The measuring cell is prevented from rotating by a locking screw (4). As the result of this modular design, the measuring cell and the electronics can be replaced separately from each other. The set parameter data are retained.

At the top of the enclosure is a plastic cover (1), which hides the input keys.

Example for an attached measuring point label

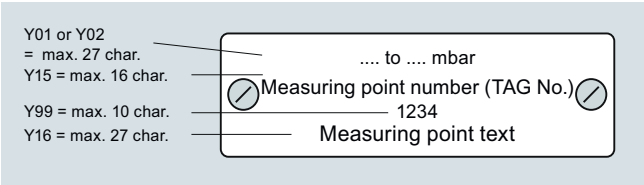

© Siemens 2020

Function

Operation of electronics with HART communication

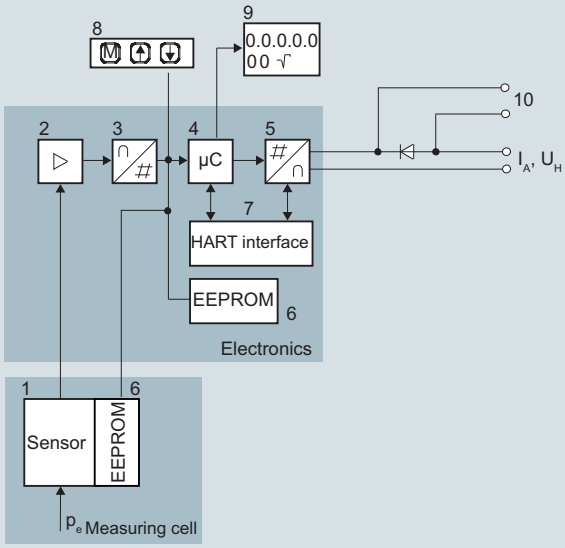

1 Measuring cell sensor
2 Instrument amplifier
3 Analog-to-digital converter
4 Microcontroller
5 Digital-to-analog converter
6 One non-volatile memory each in the measuring cell and electronics
7 HART interface
8 Three input keys (local operation)
9 Digital display
10 Diode circuit and connection for external ammeter
I_A Output current
U_H Power supply
P_e Input variable

Function diagram of electronics

The bridge output voltage created by the sensor (1, Figure "Function diagram of the electronics") is amplified by the measuring amplifier (2) and digitized in the analog-to-digital converter (3). The digital information is evaluated in a microcontroller, its linearity and temperature response corrected, and converted in a digital-to-analog converter (5) into an output current of 4 to 20 mA.

The diode circuit (10) protects against incorrect polarity.

The data specific to the measuring cell, the electronics data, and the parameter data are stored in the two non-volatile memories (6). The one memory is coupled to the measuring cell, the other to the electronics. As the result of this modular design, the electronics and the measuring cell can be replaced separately from each other.

Using the 3 input keys (8) you can parameterize the pressure transmitter directly at the measuring point. The input buttons can also be used to control the view of the results, the error messages and the operating modes on the display (9).

The HART modem (7) permits parameterization using a protocol according to the HART specification.

The pressure transmitters with measuring spans ≤ 63 bar measure the input pressure compared to atmosphere, transmitters with measuring spans ≥ 160 bar compared to vacuum.

Operation of electronics with PROFIBUS PA communication

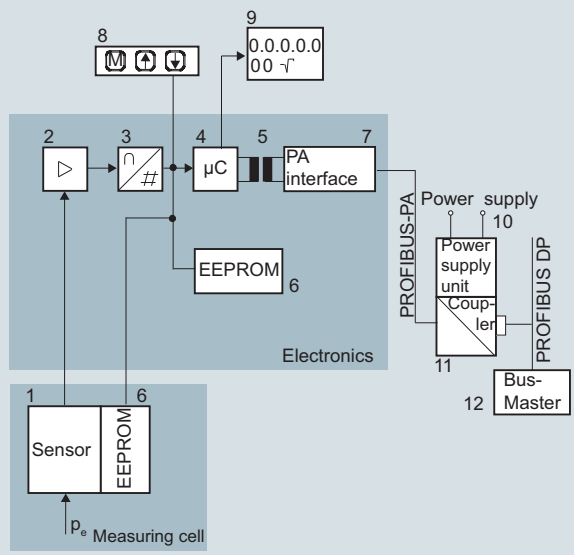

1 Measuring cell sensor
2 Instrument amplifier
3 Analog-to-digital converter
4 Microcontroller
5 Electrical isolation
6 One non-volatile memory each in the measuring cell and electronics
7 PROFIBUS-PA interface
8 Three input keys (local operation)
9 Digital display
10 Power supply
11 DP/PA coupler or link
12 Bus master
p_e Input variable

Function diagram of electronics

The bridge output voltage created by the sensor (1, Figure "Function diagram of the electronics") is amplified by the measuring amplifier (2) and digitized in the analog-to-digital converter (3). The digital information is evaluated in the microcontroller, its linearity and temperature response corrected, and provided on the PROFIBUS PA through an electrically isolated PA interface (7).

The data specific to the measuring cell, the electronics data, and the parameter data are stored in the two non-volatile memories (6). The one memory is coupled to the measuring cell, the other to the electronics. As the result of this modular design, the electronics and the measuring cell can be replaced separately from each other.

Using the three input buttons (8) you can parameterize the pressure transmitter directly at the measuring point. The input buttons can also be used to control the view of the results, the error messages and the operating modes on the display (9).

The results with status values and diagnostic values are transferred by cyclic data transmission on the PROFIBUS PA. Parameterization data and error messages are transferred by acyclic data transmission. Special software such as SIMATIC PDM is required for this.

© Siemens 2020

Operation of electronics with FOUNDATION Fieldbus communication

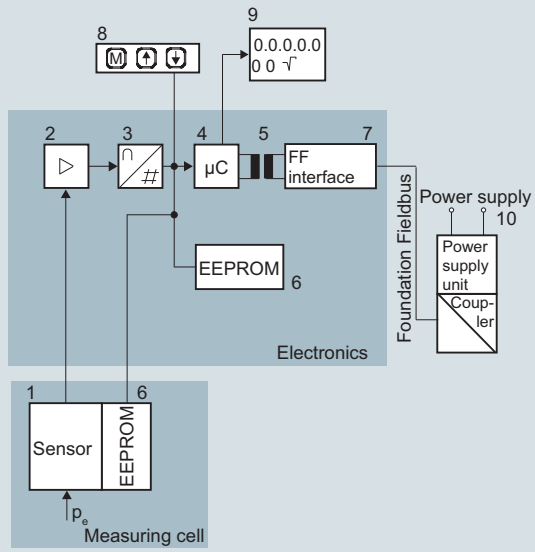

1	Measuring cell sensor	8	Three input keys (local operation)
2	Instrument amplifier	9	Digital display
3	Analog-to-digital converter	10	Power supply
4	Microcontroller		
5	Electrical isolation		
6	One non-volatile memory each in the measuring cell and electronics	p_e	Input variable
7	FF interface		

Function diagram of electronics

The bridge output voltage created by the sensor (1, Figure "Function diagram of electronics") is amplified by the measuring amplifier (2) and digitized in the analog-to-digital converter (3). The digital information is evaluated in the microcontroller, its linearity and temperature response corrected, and provided on the FOUNDATION Fieldbus through an electrically isolated FOUNDATION Fieldbus interface (7).

The data specific to the measuring cell, the electronics data, and the parameter data are stored in the two non-volatile memories (6). The one memory is coupled to the measuring cell, the other to the electronics. As the result of this modular design, the electronics and the measuring cell can be replaced separately from each other.

Using the three input buttons (8) you can parameterize the pressure transmitter directly at the measuring point. The input buttons can also be used to control the view of the results, the error messages and the operating modes on the display (9).

The results with status values and diagnostic values are transferred by cyclic data transmission on the FOUNDATION Fieldbus. Parameterization data and error messages are transferred by acyclic data transmission. Special software such as National Instruments Configurator is required for this.

Mode of operation of the measuring cells

Measuring cell for gauge pressure

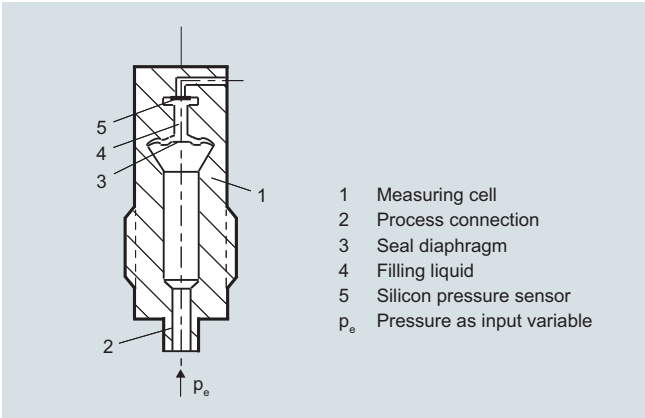

Measuring cell for gauge pressure, function diagram

The pressure p_e is applied through the process connection (2, Figure "Measuring cell for gauge pressure, function diagram) to the measuring cell (1). This pressure is subsequently transmitted further through the seal diaphragm (3) and the filling liquid (4) to the silicon pressure sensor (5) whose measuring diaphragm is then flexed. This changes the resistance of the four piezo-resistors fitted in the diaphragm in a bridge circuit. This change in resistance results in a bridge output voltage proportional to the differential pressure.

Measuring cell for differential pressure and flow

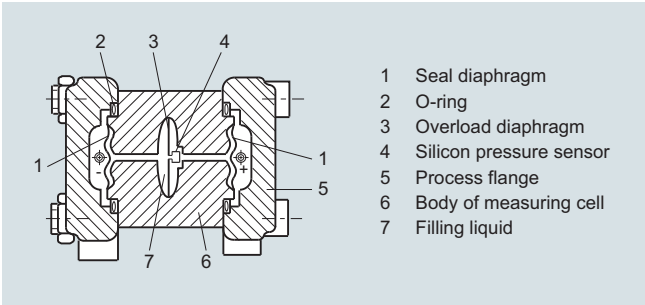

Measuring cell for differential pressure and flow, function diagram

The differential pressure is transmitted through the seal diaphragms (1, Figure "Measuring cell for differential pressure and flow, function diagram") and the filling liquid (7) to the silicon pressure sensor (4).

The measuring diaphragm is flexed by the applied differential pressure. This changes the resistance of the four piezo-resistors fitted in the diaphragm in a bridge circuit. This change in resistance results in a bridge output voltage proportional to the differential pressure.

An overload diaphragm is installed to provide protection from overloads. If the measuring limits are exceeded, the overload diaphragm (3) is flexed until the seal diaphragm rests on the body of the measuring cell (6), thus protecting the silicon pressure sensor from overloads.

© Siemens 2020

Parameterization SITRANS P410

Depending on the version, there are a range of options for parameterizing the pressure transmitter and for setting or scanning the parameters.

Parameterization using the input buttons (local operation)

With the input buttons you can easily set the most important parameters without any additional equipment.

Parameterization using HART

Parameterization using HART is performed with a HART Communicator or a PC.

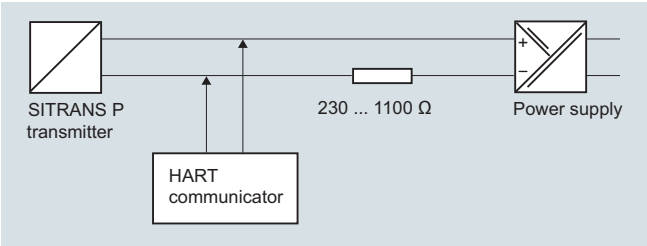

Communication between a HART Communicator and a pressure transmitter

When parameterizing with the HART Communicator, the connection is made directly to the 2-wire cable.

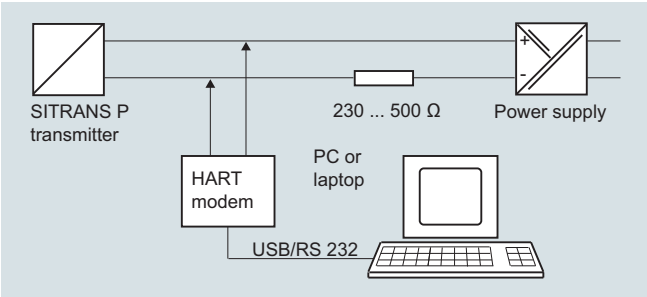

HART communication between a PC communicator and a pressure transmitter

When parameterizing with a PC, the connection is made through a HART modem.

The signals needed for communication in conformity with the HART 5.x or 6.x protocols are superimposed on the output current using the Frequency Shift Keying (FSK) method.

Adjustable parameters, SITRANS P410 with HART

Parameters	Input keys (DS III HART)	HART communication
Lower range value	x	x
Upper range value	x	x
Electrical damping	x	x
Lower range value without application of a pressure ("Blind setting")	x	x
Upper range value without application of a pressure ("Blind setting")	x	x
Zero adjustment	x	x
current transmitter	x	x
Fault current	x	x
Disabling of buttons, write protection	x	x[1)]
Type of dimension and actual dimension	x	x
Characteristic (linear / square-rooted)	x[2)]	x[2)]
Input of characteristic		x
Freely-programmable LCD		x
Diagnostic functions		x

1) Cancel apart from write protection
2) Only differential pressure

Diagnostic functions for SITRANS P410 with HART

- Zero correction display
- Event counter
- Limit transmitter
- Saturation alarm
- Slave pointer
- Simulation functions
- Maintenance timer

Available physical units of display for SITRANS P410 with HART

Physical variable	Physical dimensions
Pressure (setting can also be made in the factory)	Pa, MPa, kPa, bar, mbar, torr, atm, psi, g/cm^2, kg/cm^2, inH$_2$O, inH$_2$O (4 °C), mmH$_2$O, ftH$_2$O (20 °C), inHg, mmHg
Level (height data)	m, cm, mm, ft, in
Volume	m^3, dm^3, hl, yd^3, ft^3, in^3, US gallon, Imp. gallon, bushel, barrel, barrel liquid
Mass	g, kg, t, lb, Ston, Lton, oz
volume flow	m^3/d, m^3/h, m^3/s, l/min, l/s, ft^3/d, ft^3/min, ft^3/s, US gallon/min, US gallon/s
Mass flow	t/d, t/h, t/min, kg/d, kg/h, kg/min, kg/s, g/d, g/h, g/min, g/s, lb/d, lb/h, lb/min, lb/s, LTon/d, LTon/h, STon/d, STon/h, STon/min
Temperature	K, °C, °F, °R
Miscellaneous	%, mA

Parameterization through PROFIBUS PA interface

Fully digital communication through PROFIBUS PA, profile 3.0, is particularly user-friendly. Through the PROFIBUS the DS III with PROFIBUS PA is connected to a process control system, e. g. SIMATIC PSC 7. Communication is possible even in a potentially explosive environment.

For parameterization through PROFIBUS you need suitable software, e.g. SIMATIC PDM (Process Device Manager).

Parameterization through FOUNDATION Fieldbus interface

Fully digital communication through FOUNDATION Fieldbus is particularly user-friendly. Through the FOUNDATION Fieldbus the DS III with FOUNDATION Fieldbus is connected to a process control system. Communication is possible even in a potentially explosive environment.

For parameterization through the FOUNDATION Fieldbus you need suitable software, e.g. National Instruments Configurator.

Adjustable parameters for SITRANS P410 with PROFIBUS PA and FOUNDATION Fieldbus

Parameters	Input keys	PROFIBUS PA and FOUNDATION Fieldbus interface
Electrical damping	x	x
Zero adjustment (correction of position)	x	x
Buttons and/or function disabling	x	x
Source of measured-value display	x	x
Physical dimension of display	x	x
Position of decimal point	x	x
Bus address	x	x
Adjustment of characteristic	x	x
Input of characteristic		x
Freely-programmable LCD		x
Diagnostics functions		x

© Siemens 2020

Diagnostic functions for SITRANS P410 with PROFIBUS PA and FOUNDATION Fieldbus

- Event counter
- Slave pointer
- Maintenance timer
- Simulation functions
- Display of zero correction
- Limit transmitter
- Saturation alarm

Physical dimensions available for the display

Physical variable	Physical dimensions
Pressure (setting can also be made in the factory)	MPa, kPa, Pa, bar, mbar, torr, atm, psi, g/cm^2, kg/cm^2, mmH_2O, mmH_2O (4 °C), inH_2O, inH_20 (4 °C), ftH_2O (20 °C), mmHg, inHg
Level (height data)	m, cm, mm, ft, in, yd
Volume	m^3, dm^3, hl, yd^3, ft^3, in^3, US gallon, Imp. gallon, bushel, barrel, barrel liquid
volume flow	m^3/s, m^3/min, m^3/h, m^3/d, l/s, l/min, l/h, l/d, Ml/d, ft^3/s, ft^3/min, ft^3/h, ft^3/d, US gallon/s, US gallon/min, US gallon/h, US gallon/d, bbl/s, bbl/min, bbl/h, bbl/d
Mass flow	g/s, g/min, g/h, g/d, kg/s, kg/min, kg/h, kg/d, t/s, t/min, t/h, /t/d, lb/s, lb/min, lb/h, lb/d, STon/s, STon/min, STon/h, STon/d, LTon/s, LTon/min, LTon/h, LTon/d
Total mass flow	t, kg, g, lb, oz, LTon, STon
Temperature	K, °C, °F, °R
Miscellaneous	%

© Siemens 2020

Technical specifications

SITRANS P410 for gauge pressure				
Input				
Measured variable	Gauge pressure			
Measuring span (infinitely adjustable) or nominal measuring range, max. operating pressure (in accordance with 97/23/EC Pressure Equipment Directive) and max. test pressure (pursuant to DIN 16086)	**HART**	**PROFIBUS PA/ FOUNDATION Fieldbus**		
	Measuring span	Nominal measuring range	Max. operating pressure MAWP (PS)	Max. perm. test pressure
	0.01 ... 1 bar 1 ... 100 kPa 0.15 ... 14.5 psi	1 bar 100 kPa 14.5 psi	4 bar 400 kPa 58 psi	6 bar 600 kPa 87 psi
	0.04 ... 4 bar 4 ... 400 kPa 0.58 ... 58 psi	4 bar 400 kPa 58 psi	7 bar 0.7 MPa 102 psi	10 bar 1 MPa 145 psi
	0.16 ... 16 bar 16 ... 1600 kPa 2.3 ... 232 psi	16 bar 1600 kPa 232 psi	21 bar 2.1 MPa 305 psi	32 bar 3.2 MPa 464 psi
	0.63 ... 63 bar 63 ... 6300 kPa 9.1 ... 914 psi	63 bar 6300 kPa 914 psi	67 bar 6.7MPa 972 psi	100 bar 10 MPa 1450 psi
	1.6 ... 160 bar 0.16 ... 16 MPa 23 ... 2321 psi	160 bar 16 MPa 2321 psi	167 bar 16.7 MPa 2422 psi	250 bar 2.5 MPa 3626 psi
Lower measuring limit				
• Measuring cell with silicone oil filling	30 mbar a/3 kPa a/0.44 psi a			
Upper measuring limit	100 % of max. measuring span			
Output	**HART**		**PROFIBUS PA/FOUNDATION Fieldbus**	
Output signal	4 ... 20 mA		Digital PROFIBUS PA and FOUNDATION Fieldbus signal	
• Lower limit (infinitely adjustable)	3.55 mA, factory preset to 3.84 mA		-	
• Upper limit (infinitely adjustable)	23 mA, factory preset to 20.5 mA or optionally set to 22.0 mA		-	
Load				
• Without HART	$R_B \leq (U_H - 10.5\ V)/0.023\ A$ in Ω, U_H: Power supply in V		-	
• With HART	R_B = 230 ... 500 Ω (SIMATIC PDM) or R_B = 230 ... 1100 Ω (HART Communicator)		-	
Physical bus	-		IEC 61158-2	
Protection against polarity reversal	Protected against short-circuit and polarity reversal. Each connection against the other with max. supply voltage.			
Electrical damping (step width 0.1 s)	Set to 2 s (0 ... 100 s)			

© Siemens 2020

SITRANS P410 for gauge pressure	
Measuring accuracy	Acc. to IEC 60770-1
Reference conditions	• Increasing characteristic • Lower range value 0 bar/kPa/psi • Stainless steel seal diaphragm • Silicone oil filling • Room temperature 25 °C (77 °F)
Measuring span ratio r (spread, Turn-Down)	r = max. measuring span/set measuring span or nominal measuring range
Error in measurement at limit setting incl. hysteresis and reproducibility	
• Linear characteristic	
- 1 bar/100 kPa/14.5 psi 4 bar/400 kPa/58 psi 16 bar/1.6 MPa/232 psi 63 bar/6.3 MPa/914 psi 160 bar/16 MPa/2321 psi	r ≤ 5 : ≤ 0.04 % 5 < r ≤ 100 : ≤ (0.004 · r + 0.045) %
Influence of ambient temperature (in percent per 28 °C (50 °F))	
• 1 bar/100 kPa/14.5 psi	≤ (0.05 · r + 0.1) %
• 4 bar/400 kPa/58 psi 16 bar/1.6 MPa/232 psi 63 bar/6.3 MPa/914 psi 160 bar/16 MPa/2321 psi	≤ (0.025 · r + 0.125) %
Long-term stability (temperature change ± 30 °C (± 54 °F))	
• 1 bar/100 kPa/14.5 psi 4 bar/400 kPa/58 psi	≤ (0.25 · r) % in 5 years
• 16 bar/1.6 MPa/232 psi 63 bar/6.3 MPa/914 psi 160 bar/16 MPa/2321 psi	≤ (0.125 · r) % in 5 years
Effect of mounting position	≤ 0.05 mbar/0.005 kPa/0.000725 psi per 10° inclination (zero point correction is possible with position error compensation)
Effect of auxiliary power supply (in percent per change in voltage)	0.005 % per 1 V
Measuring value resolution for PROFIBUS PA and FOUNDATION Fieldbus	$3 \cdot 10^{-5}$ of nominal measuring range

© Siemens 2020

SITRANS P410 for gauge pressure		
Operating conditions		
Degree of protection		
• according to EN 60529	IP66 (optional IP66/IP68)	
• according to NEMA 250	Type 4X	
Temperature of medium		
• Measuring cell with silicone oil filling	-40 ... +100 °C (-40 ... +212 °F)	
• Measuring cell with inert filling liquid	-20 ... +100 °C (-4 ... +212 °F)	
• In conjunction with dust explosion protection	-20 ... +60 °C (-4 ... +140 °F)	
Ambient conditions		
• Ambient temperature		
- Transmitter	-40 ... +85 °C (-40 ... +185 °F)	
- Display readable	-30 ... +85 °C (-22 ... +185 °F)	
• Storage temperature	-50 ... +85 °C (-58 ... +185 °F)	
• Climatic class		
- Condensation	Relative humidity 0 ... 100 % Condensation permissible, suitable for use in the tropics	
• Electromagnetic Compatibility		
- Emitted interference and interference immunity	Acc. to IEC 61326 and NAMUR NE 21	
Design		
Weight (without options)	Die-cast aluminum: ≈ 2.0 kg (≈ 4.4 lb) Stainless steel precision casting: ≈ 4.6 kg (≈ 10.1 lb)	
Enclosure material	Low-copper die-cast aluminum, GD-AlSi 12 or stainless steel precision casting, mat. no. 1.4408	
Wetted parts materials		
• Connection shank	Stainless steel, mat. no. 1.4404/316L or Hastelloy C4, mat. no. 2.4602	
• Oval flange	Stainless steel, mat. no. 1.4404/316L	
• Seal diaphragm	Stainless steel, mat. no. 1.4404/316L or Hastelloy C276, mat. no. 2.4819	
Measuring cell filling	Silicone oil or inert filling liquid (maximum value with oxygen measurement pressure 100 bar (1450 psi) at 60 °C (140 °F))	
Process connection	Connection shank G½B to DIN EN 837-1, female thread ½ -14 NPT or oval flange (PN 160 (MAWP 2320 psi)) to DIN 19213 with mounting thread M10 or $^{7}/_{16}$-20 UNF to IEC 61518/DIN EN 61518	
Material of mounting bracket		
• Steel	Sheet-steel, Mat. No. 1.0330, chrome-plated	
• Stainless steel 304	Sheet stainless steel, mat. no. 1.4301 (SS 304)	
• Stainless steel 316L	Sheet stainless steel, mat. no. 1.4404 (SS 316L)	
Power supply U_H	**HART**	**PROFIBUS PA/ FOUNDATION Fieldbus**
Terminal voltage on transmitter	10.5 ... 45 V DC 10.5 ... 30 V DC in intrinsically-safe mode	-
Power supply		Supplied through bus
Separate supply voltage	-	No
Bus voltage		
• Not Ex	-	9 ... 32 V
• With intrinsically-safe operation	-	9 ... 24 V
Current consumption		
• Basic current (max.)	-	12.5 mA
• Start-up current ≤ basic current	-	Yes
• Max. current in event of fault	-	15.5 mA
Fault disconnection electronics (FDE) available	-	Yes

© Siemens 2020

SITRANS P410 for gauge pressure		
Certificates and approvals		
Classification according to PED 2014/68/EU	For gases of fluid group 1 and liquids of fluid group 1; complies with requirements of article 4, paragraph 3 (sound engineering practice)	
Explosion protection		
• Intrinsic safety "i"	PTB 13 ATEX 2007 X	
- Marking	Ex II 1/2 G Ex ia/ib IIC T4/T5/T6 Ga/Gb	
- Permissible ambient temperature	-40 ... +85 °C (-40 ... +185 °F) temperature class T4; -40 ... +70 °C (-40 ... +158 °F) temperature class T5; -40 ... +60 °C (-40 ... +140 °F) temperature class T6	
- Connection	To certified intrinsically-safe circuits with peak values: U_i = 30 V, I_i = 100 mA, P_i = 750 mW; R_i = 300 Ω	FISCO supply unit: U_o = 17.5 V, I_o = 380 mA, P_o = 5.32 W Linear barrier: U_o = 24 V, I_o = 174 mA, P_o = 1 W
- Effective internal inductance/capacitance	L_i = 0.4 mH, C_i = 6 nF	L_i = 7 µH, C_i = 1.1 nF
• Explosion-proof "d"	PTB 99 ATEX 1160	
- Marking	Ex II 1/2 G Ex d IIC T4/T6 Ga/Gb	
- Permissible ambient temperature	-40 ... +85 °C (-40 ... +185 °F) temperature class T4; -40 ... +60 °C (-40 ... +140 °F) temperature class T6	
- Connection	To circuits with values: U_H = 10.5 ... 45 V DC	To circuits with values: U_H = 9 ... 32 V DC
• Dust explosion protection for zone 20 (pending)	PTB 01 ATEX 2055	
- Marking	Ex II 1 D Ex ta IIIC T120°C Da Ex II 1/2 D Ex ta/tb IIIC T120°C Da/Db	
- Permissible ambient temperature	-40 ... +85 °C (-40 ... +185 °F)	
- Max. surface temperature	120 °C (248 °F)	
- Connection	To certified intrinsically-safe circuits with peak values: U_i = 30 V, I_i = 100 mA, P_i = 750 mW, R_i = 300 Ω	FISCO supply unit: U_o = 17.5 V, I_o = 380 mA, P_o = 5.32 W Linear barrier: U_o = 24 V, I_o = 250 mA, P_o = 1 W
- Effective internal inductance/capacitance	L_i = 0.4 mH, C_i = 6 nF	L_i = 7 µH, C_i = 1.1 nF
• Dust explosion protection for zone 21/22 (pending)	PTB 01 ATEX 2055	
- Marking	Ex II 2 D Ex tb IIIC T120°C Db	
- Connection	To circuits with values: U_H = 10.5 ... 45 V DC; P_{max} = 1.2 W	To circuits with values: U_H = 9 ... 32 V DC; P_{max} = 1 W
• Type of protection "n" (zone 2)	PTB 13 ATEX 2007 X	
- Marking	Ex II 2/3 G Ex nA IIC T4/T5/T6 Gb/Gc Ex II 2/3 G Ex ic IIC T4/T5/T6 Gb/Gc	
- Connection (Ex nA)	U_m = 45 V	U_m = 32 V
- Connections (Ex ic)	To circuits with values: U_i = 45 V	FISCO supply unit ic: U_o = 17.5 V, I_o = 570 mA Linear barrier: U_o = 32 V, I_o = 132 mA, P_o = 1 W
- Effective internal inductance/capacitance	L_i = 0.4 mH, C_i = 6 nF	L_i = 7 µH, C_i = 1.1 nF
• Explosion protection acc. to FM (pending)	Certificate of Compliance 3008490	
- Identification (XP/DIP) or (IS); (NI)	CL I, DIV 1, GP ABCD T4...T6; CL II, DIV 1, GP EFG; CL III; CL I, ZN 0/1 AEx ia IIC T4...T6; CL I, DIV 2, GP ABCD T4...T6; CL II, DIV 2, GP FG; CL III	
• Explosion protection to CSA (pending)	Certificate of Compliance 1153651	
- Identification (XP/DIP) or (IS)	CL I, DIV 1, GP ABCD T4...T6; CL II, DIV 1, GP EFG; CL III; Ex ia IIC T4...T6; CL I, DIV 2, GP ABCD T4...T6; CL II, DIV 2, GP FG; CL III	

© Siemens 2020

HART communication	
HART	230 ... 1100 Ω
Protocol	HART Version 5.x
Software for computer	SIMATIC PDM
PROFIBUS PA communication	
Simultaneous communication with master class 2 (max.)	4
The address can be set using	Configuration tool or local operation (standard setting address 126)
Cyclic data usage	
• Output byte	5 (one measured value) or 10 (two measured values)
• Input byte	0, 1, or 2 (register operating mode and reset function for metering)
Internal preprocessing	
Device profile	PROFIBUS PA Profile for Process Control Devices Version 3.0, class B
Function blocks	2
• Analog input	
- Adaptation to customer-specific process variables	Yes, linearly rising or falling characteristic
- Electrical damping, adjustable	0 ... 100 s
- Simulation function	Input /Output
- Failure mode	parameterizable (last good value, substitute value, incorrect value)
- Limit monitoring	Yes, one upper and lower warning limit and one alarm limit respectively
• Register (totalizer)	Can be reset, preset, optional direction of counting, simulation function of register output
- Failure mode	parameterizable (summation with last good value, continuous summation, summation with incorrect value)
- Limit monitoring	One upper and lower warning limit and one alarm limit respectively
• Physical block	1
Transducer blocks	2
• Pressure transducer block	
- Can be calibrated by applying two pressures	Yes
- Monitoring of sensor limits	Yes
- Specification of a container characteristic with	Max. 30 nodes
- Square-rooted characteristic for flow measurement	Yes
- Gradual volume suppression and implementation point of square-root extraction	Parameterizable
- Simulation function for measured pressure value and sensor temperature	Constant value or over parameterizable ramp function

FOUNDATION Fieldbus communication	
Function blocks	3 function blocks analog input, 1 function block PID
• Analog input	
- Adaptation to customer-specific process variables	Yes, linearly rising or falling characteristic
- Electrical damping, adjustable	0 ... 100 s
- Simulation function	Output/input (can be locked within the device with a bridge)
- Failure mode	parameterizable (last good value, substitute value, incorrect value)
- Limit monitoring	Yes, one upper and lower warning limit and one alarm limit respectively
- Square-rooted characteristic for flow measurement	Yes
• PID	Standard FOUNDATION Fieldbus function block
• Physical block	1 resource block
Transducer blocks	1 transducer block Pressure with calibration, 1 transducer block LCD
• Pressure transducer block	
- Can be calibrated by applying two pressures	Yes
- Monitoring of sensor limits	Yes
- Simulation function: Measured pressure value, sensor temperature and electronics temperature	Constant value or over parameterizable ramp function

© Siemens 2020

1

for gauge pressure

Selection and Ordering data	Article No.	Order code
Pressure transmitter for gauge pressure, SITRANS P410 with HART	↗ **7MF4033-** ■■■■■ - ■■■■	**-Z C41**
↗ Click on the Article No. for the online configuration in the PIA Life Cycle Portal.		
Measuring cell filling / **Measuring cell cleaning**		
Silicone oil / normal	1	
Measuring span (min. ... max.)		
0.01 ... 1 bar (0.15 ... 14.5 psi)	B	
0.04 ... 4 bar (0.58 ... 58 psi)	C	
0.16 ... 16 bar (2.32 ... 232 psi)	D	
0.63 ... 63 bar (9.14 ... 914 psi)	E	
1.6 ... 160 bar (23.2 ... 2320 psi)	F	
Wetted parts materials		
Seal diaphragm / Process connection		
Stainless steel / Stainless steel	A	
Hastelloy / Stainless steel	B	
Hastelloy / Hastelloy	C	
Version for diaphragm seals in conjunction with process connector "female thread ½-14 NPT" **(recommended version)** [1) 2) 3) 4)]	Y 1	
Version for diaphragm seals in conjunction with process connector "G½B connection shank" [1) 2) 3) 4)]	Y 0	
Process connection		
• Connection shank G½B to EN 837-1	0	
• Female thread ½-14 NPT	1	
• Stainless steel oval flange with process connection (Oval flange has no female thread)		
- Mounting thread $^{7}/_{16}$-20 UNF to IEC 61518/DIN EN 61518	2	
- Mounting thread M10 to DIN 19213	3	
- Mounting thread M12 to DIN 19213	4	
• Male thread M20 x 1.5	5	
• Male thread ½ -14 NPT	6	
Non-wetted parts materials		
• Enclosure made of die-cast aluminium	0	
• Enclosure stainless steel precision casting[5)]	3	
Version		
• Standard version, German plate inscription, setting for pressure unit: bar	1	
• International version, English plate inscription, setting for pressure unit: bar	2	
• Chinese version, English plate inscription, setting for pressure unit: Pascal	3	
All versions include DVD with compact operating instructions in various EU languages.		
Explosion protection		
• None	A	
• With ATEX, Type of protection:		
- "Intrinsic safety (Ex ia)"	B	
- "Explosion-proof (Ex d)"[6)]	D	
- "Intrinsic safety and flameproof enclosure" (Ex ia + Ex d)"[7)]	P	
- "Ex nA/ic (Zone 2)"[8)]	E	
- "Intrinsic safety, explosion-proof enclosure and dust explosion protection (Ex ia + Ex d + Zone 1D/2D)"[7)9)]	R	
• FM + CSA intrinsic safe (is) (pending)[10)]	F	
• FM + CSA (is + ep) + Ex ia + Ex d (ATEX) + Zone 1D/2D[7)9)10)]	S	
• With FM + CSA, Type of protection:		
- "Intrinsic Safe and Explosion Proof (is + xp)"[6)10)]	N	C
Electrical connection / cable entry		
• Screwed gland M20 x1 .5		B
• Screwed gland ½-14 NPT		C
• Device plug Han 7D (plastic enclosure) incl. mating connector[11)]		D
• Device plugs M12 (stainless steel)[11)12)]		F

© Siemens 2020

Selection and Ordering data	Article No.	Order code
Pressure transmitter for gauge pressure, SITRANS P410 with HART	**7MF4033-** ■■■■■ - ■■■■	**-Z C41**
Display		
• Without display	**0**	
• Without visible display (display concealed, setting: mA)	**1**	
• With visible display (setting: mA)	**6**	
• with customer-specific display (setting as specified, Order code "Y21" or "Y22" required)	**7**	

Power supply units see Chap. 7 "Supplementary Components".

A quick-start guide is included in the scope of delivery of the device.

1) When the manufacture's certificate (calibration certificate) has to be ordered for transmitters with diaphragm seals according to IEC 60770-2, it is recommended only to order this certificate exclusively with the diaphragm seals. The measuring accuracy of the total combination is certified here.
2) If the inspection certificate 3.1.is ordered for the transmitter with mounted diaphragm seals this certificate must also be ordered with the respective remote seals.
3) The diaphragm seal is to be specified with a separate order number and must be included with the transmitter order number, for example 7MF403.-..Y..-.... and 7MF4900-1...-.B
4) The standard measuring cell filling of configurations with remote seals (Y) is silicone oil.
5) Not in conjunction with Electrical connection "device plug Han 7D".
6) Without cable gland, with blanking plug
7) With enclosed cable gland Ex ia and blanking plug
8) Configurations with device plugs Han and M12 are only available in Ex ic.
9) Only in connection with IP66.
10) Explosion protection acc. to FM/CSA: suitable for installations according to NEC 500/505.
11) Only in connection with Ex approval A, B or E.
12) M12 delivered without cable socket

© Siemens 2020

Selection and Ordering data	Article No.	Order code
Pressure transmitter for gauge pressure		
SITRANS P410 with PROFIBUS PA (PA)	↗ **7MF4034-** ■■■■■ - ■■■■	**-Z C41**
SITRANS P410 with FOUNDATION Fieldbus (FF)	↗ **7MF4035-** ■■■■■ - ■■■■	**-Z C41**
↗ Click on the Article No. for the online configuration in the PIA Life Cycle Portal.		
Measuring cell filling / **Measuring cell cleaning**		
Silicone oil / normal	1	
Nominal measuring range		
1 bar (14.5 psi)	B	
4 bar (58 psi)	C	
16 bar (232 psi)	D	
63 bar (914 psi)	E	
160 bar (2320 psi)	F	
Wetted parts materials		
Seal diaphragm / Process connection		
Stainless steel / Stainless steel	A	
Hastelloy / Stainless steel	B	
Hastelloy / Hastelloy	C	
Version for diaphragm seals in conjunction with process connector "female thread ½-14 NPT" **(recommended version)** [1) 2) 3) 4)]	Y 1	
Version for diaphragm seals in conjunction with process connector "G½B connection shank" [1) 2) 3) 4)]	Y 0	
Process connection		
• Connection shank G½B to EN 837-1	0	
• Female thread ½-14 NPT	1	
• Stainless steel oval flange with process connection (Oval flange has no female thread) [5)]		
- Mounting thread $^{7}/_{16}$-20 UNF to IEC 61518/DIN EN 61518	2	
- Mounting thread M10 to DIN 19213	3	
- Mounting thread M12 to DIN 19213	4	
• Male thread M20 x 1.5	5	
• Male thread ½ -14 NPT	6	
Non-wetted parts materials		
• Enclosure made of die-cast aluminium	0	
• Enclosure stainless steel precision casting	3	
Version		
• Standard version, German label inscription, setting of pressure unit: bar	1	
• International version, English label inscription, setting of pressure unit: psi	2	
• Chinese version, English label inscription, setting of pressure unit: kPa	3	
All versions include DVD with compact operating instructions in various EU languages.		
Explosion protection		
• None	A	
• With ATEX, Type of protection:		
- "Intrinsic safety (Ex ia)"	B	
- "Explosion-proof (Ex d)"[6)]	D	
- "Intrinsic safety and flameproof enclosure" (Ex ia + Ex d)"[7)]	P	
- "Ex nA/ic (Zone 2)"[8)]	E	
- "Intrinsic safety, explosion-proof enclosure and dust explosion protection (Ex ia + Ex d + Zone 1D/2D)"[7) 9)]	R	
• FM + CSA intrinsic safe (is)[10)]	F	
• FM + CSA (is + ep) + Ex ia + Ex d (ATEX) + Zone 1D/2D[7)9)10)]	S	
• With FM + CSA, Type of protection:		
- "Intrinsic Safe and Explosion Proof (is + xp)"[6)10)]	N	C
Electrical connection/cable entry		
• Screwed gland M20 x 1.5		B
• Screwed gland ½-14 NPT		C
• Device plugs M12 (stainless steel)[11) 12)]		F

© Siemens 2020

Selection and Ordering data	Article No.	Order code
Pressure transmitter for gauge pressure		
SITRANS P410 with PROFIBUS PA (PA)	**7MF4034-** ■■■■■ - ■■■■	**-Z C41**
SITRANS P410 with FOUNDATION Fieldbus (FF)	**7MF4035-** ■■■■■ - ■■■■	**-Z C41**
Display		
• Without display	**0**	
• Without visible display (display concealed, setting: bar)	**1**	
• With visible display (setting: bar)	**6**	
• with customer-specific display (setting as specified, Order code "Y21" required)	**7**	

A quick-start guide is included in the scope of delivery of the device.

1) When the manufacture's certificate (calibration certificate) has to be ordered for transmitters with diaphragm seals according to IEC 60770-2, it is recommended only to order this certificate exclusively with the diaphragm seals. The measuring accuracy of the total combination is certified here.
2) If the inspection certificate 3.1.is ordered for the transmitter with mounted diaphragm seals this certificate must also be ordered with the respective remote seals.
3) The diaphragm seal is to be specified with a separate order number and must be included with the transmitter order number, for example 7MF403.-..Y..-.... and 7MF4900-1...-.B
4) The standard measuring cell filling of configurations with remote seals (Y) is silicone oil.
5) M10 fastening thread: Max. measuring span 160 bar (2320 psi)
7/16-20 UNF and M12 fastening thread: Max. measuring span 400 bar (5802 psi)
6) Without cable gland, with blanking plug.
7) With enclosed cable gland Ex ia and blanking plug.
8) Configurations with device plugs Han and M12 are only available in Ex ic.
9) Only in connection with IP66.
10) Explosion protection acc. to FM/CSA: suitable for installations according to NEC 500/505.
11) M12 delivered without cable socket.
12) Only in connection with Ex approval A, B, E or F.

© Siemens 2020

Selection and Ordering data	Order code	HART	PA	FF
Further designs Add "**-Z**" to Article No. and specify Order code.				
Pressure transmitter with mounting bracket (1x fixing angle, 2 x nut, 2 x U-washer or 1 x bracket, 2 x nut, 2 x U-washer) made of:				
• Steel	**A01**	✓	✓	✓
• Stainless steel 304	**A02**	✓	✓	✓
• Stainless steel 316L	**A03**	✓	✓	✓
Device plugs[1]				
• Han 7D (metal)	**A30**	✓		
• Han 8D (instead of Han 7D)	**A31**	✓		
• Angled	**A32**	✓		
• Han 8D (metal)	**A33**	✓		
Cable sockets for device plugs M12 (metal (CuZn))	**A50**	✓	✓	✓
Rating plate inscription (instead of German)				
• English	**B11**	✓	✓	✓
• French	**B12**	✓	✓	✓
• Spanish	**B13**	✓	✓	✓
• Italian	**B14**	✓	✓	✓
English rating plate Pressure units in in$H_2$0 and/or psi	**B21**	✓	✓	✓
Quality test certificate, 5-point factory calibration (IEC 60770-2)[2]	**C11**	✓	✓	✓
Inspection certificate[3] Acc. to EN 10204-3.1	**C12**	✓	✓	✓
Factory certificate Acc. to EN 10204-2.2	**C14**	✓	✓	✓
Inspection certificate (EN 10204-3.1) PMI test of parts in contact with medium	**C15**	✓	✓	✓
Functional safety (SIL2) (pending) Devices suitable for use according to IEC 61508 and IEC 61511. Includes SIL conformity declaration	**C20**	✓		
Functional safety (SIL2/3) Devices suitable for use according to IEC 61508 and IEC 61511. Includes SIL conformity declaration	**C23**	✓		
Increased measuring accuracy (mandatory specification for SITRANS P410)	**C41**	✓	✓	✓
PED for Russia with initial calibration mark	**C99**	✓	✓	✓
Setting of the upper saturation limit of the output signal to 22.0 mA	**D05**	✓		
Manufacturer's declaration acc. to NACE (MR 0103-2012 and MR 0175-2009)	**D07**	✓	✓	✓
Degree of protection IP66/IP68 (only for M20x1.5 and ½-14 NPT)	**D12**	✓	✓	✓
Supplied with oval flange (1 item), PTFE packing and screws in thread of oval flange	**D37**	✓	✓	✓
Capri cable gland 4F CrNi and clamping device (848699 + 810634) included	**D59**	✓	✓	✓
TAG plate empty (no inscription)	**D61**	✓	✓	✓

Selection and Ordering data	Order code	HART	PA	FF
Further designs Add "**-Z**" to Article No. and specify Order code.				
Use in or on zone 1D/2D[4] (only together with type of protection "Intrinsic safety" (transmitter 7MF4...-.....-.B.. Ex ia)" and IP66)	**E01**	✓	✓	✓
CRN approval Canada (Canadian Registration Number)	**E22**[5]	✓	✓	✓
Dual seal	**E24**	✓	✓	✓
Explosion-proof "Intrinsic safety" to NEPSI (China) (only for transmitter 7MF4...-.....-.B..)	**E55**[6]	✓	✓	✓
Explosion protection "Explosion-proof" to NEPSI (China) (only for transmitter 7MF4...-.....-.D..)	**E56**[6]	✓	✓	✓
Ex protection "Zone 2" to NEPSI (China) (only for transmitter 7MF4...-.....-.E..)	**E57**[6]	✓	✓	✓
Ex protection „Ex ia", „Ex d" and „Zone 2" to NEPSI (China) (only for transmitter 7MF4...-.....-.R..)	**E58**[6]	✓	✓	✓
"Intrinsic safety" and "Explosion-proof" explosion protection acc. to Kosha (Korea) (pending) (only for transmitter 7MF4...-.....-.[B, D]..-Z + E11)	**E70**[6]	✓	✓	✓
Ex-protection Ex ia according to EAC Ex (Russia)	**E80**	✓	✓	✓
Ex-protection Ex d according to EAC Ex (Russia)	**E81**	✓	✓	✓
Ex-protection Ex nA/ic (Zone 2) according to EAC Ex (Russia)	**E82**	✓	✓	✓
Ex-protection Ex ia + Ex d + Zone 1D/2D according to EAC Ex (Russia)	**E83**	✓	✓	✓
Two coats of lacquer on enclosure and cover (PU on epoxy)	**G10**	✓	✓	✓
Transient protector 6 kV (lightning protection)	**J01**	✓	✓	✓
Oval flange NAM (ASTAVA)	**J06**	✓	✓	✓
Marine approvals				
• Det Norske Veritas Germanischer Lloyd (DNV-GL)	**S10**	✓	✓	✓
• Lloyds Register (LR)	**S11**	✓	✓	✓
• French marine classification society Bureau Veritas (BV)	**S12**	✓	✓	✓
• American Bureau of Shipping (ABS)	**S14**	✓	✓	✓
• Russian Maritime Register (RMR)	**S16**	✓	✓	✓
• Korean Register of Shipping (KR)	**S17**	✓	✓	✓

Factor valve block mounting for SITRANS P410 is possible. Depending on the available P410 variants, please see the configuration options for SITRANS P DS III (page 1/253).

1) Device plug Han IP65

2) When the manufacture's certificate (calibration certificate) has to be ordered for transmitters with diaphragm seals according to IEC 60770-2, it is recommended only to order this certificate exclusively with the diaphragm seals. The measuring accuracy of the total combination is certified here.

3) If the inspection certificate 3.1.is ordered for the transmitter with mounted diaphragm seals this certificate must also be ordered with the respective remote seals.

4) Option does not contain gas explosion protection; only dust explosion protection: Use in or at Zone 1D/2D.

5) Cannot be ordered with remote seal.

6) When the additional ex option is selected, the ATEX marking on the device is omitted. Only the Ex option selected via the Z option is marked.

© Siemens 2020

Selection and Ordering data	Order code			
Additional data Please add "**-Z**" to Article No. and specify Order code(s) and plain text.		**HART**	**PA**	**FF**
Measuring range to be set Specify in plain text (max. 5 characters): Y01: ... up to ... mbar, bar, kPa, MPa, psi	**Y01**	✓	✓[1)]	
Stainless steel tag plate and entry in device variable (measuring point description) Max. 16 characters, specify in plain text: Y15:	**Y15**	✓	✓	✓
Measuring point text (entry in device variable) Max. 27 characters, specify in plain text: Y16:	**Y16**	✓	✓	✓
Entry of HART address (TAG) Max. 8 characters, specify in plain text: Y17:	**Y17**	✓		
Setting of pressure indication in pressure units Specify in plain text (standard setting: bar): Y21: mbar, bar, kPa, MPa, psi, ... Note: The following pressure units can be selected: bar, mbar, mm H_2O*), inH_2O*), ftH_2O*), mmHG, inHG, psi, Pa, kPa, MPa, g/cm^2, kg/cm^2, Torr, ATM or % *) ref. temperature 20 °C	**Y21**	✓	✓	✓
Setting of pressure indication in non-pressure units[2)] Specify in plain text: Y22: ..... up to ..... l/min, m^3/h, m, USgpm, ... (specification of measuring range in pressure units "Y01" is essential, unit with max. 5 characters)	**Y22 + Y01**	✓		

✓ = available

Ordering example

Item line:	7MF4033-1EA00-1AA7-Z C41
B line:	A01 + Y01 + Y21
C line:	Y01: 10 ... 20 bar (145 ... 290 psi)
C line:	Y21: bar (psi)

1) Measuring accuracies for PROFIBUS PA transmitters with Option Y01 are calculated in the same way as for HART devices.
2) Preset values can only be changed over SIMATIC PDM.

© Siemens 2020

Dimensional drawings

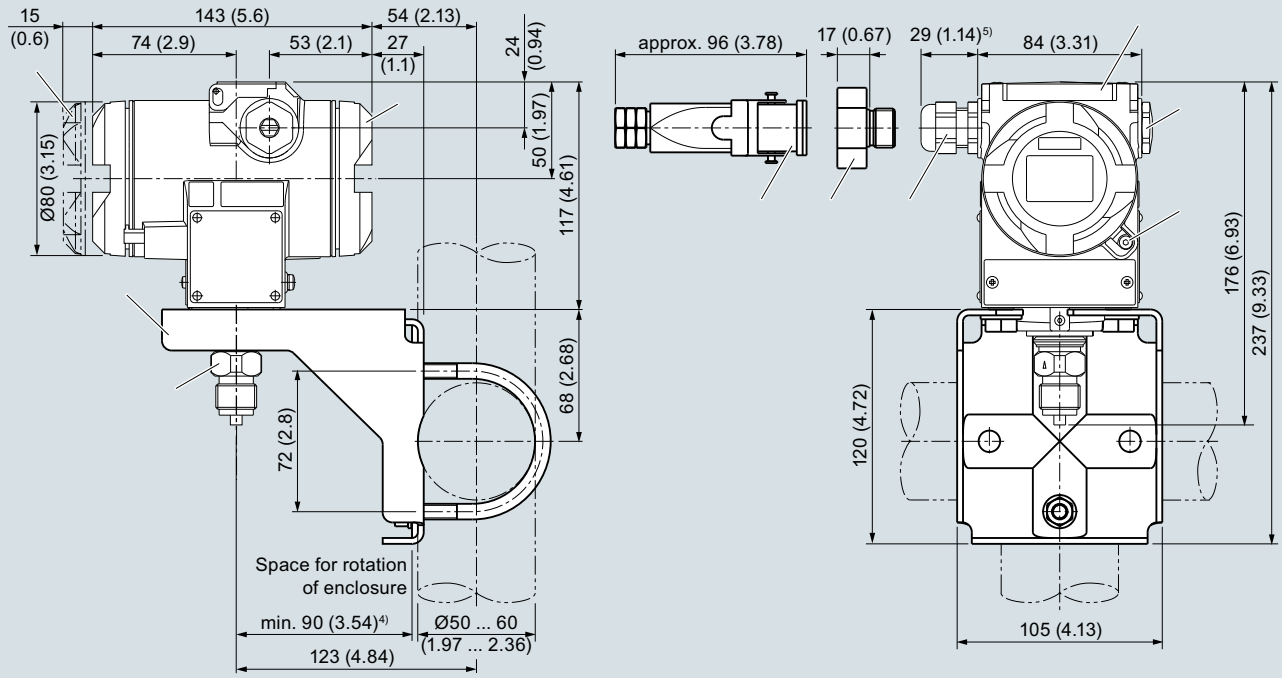

1. Electronics side, local display
   (longer overall length for cover with inspection window)[1]
2. Connection side[1]
3. Electrical connection:
   - Pg 13.5 screw gland (adapter)[2] [3]
   - M20 x 1,5[3] screw gland
   - ½-14 NPT screw gland
   - Han 7D/Han 8D[2] [3] device plug
4. Harting adapter
5. Cover over buttons
6. Blanking plug
7. Safety catch (only for "flameproof enclosure" type of protection; not shown in the drawing)
8. Process connection: G½B connection pin or oval flange
9. Mounting bracket (optional)

1) In addition, allow approx. 20 mm (0.79 inch) for the thread length
2) Not with "flameproof enclosure" type of protection
3) Not for type of protection "FM + CSA" [is + XP]"
4) Minimum distance for rotating
5) For Pg 13.5 with adapter, approx. 45 mm (1.77 inch)

SITRANS P410 pressure transmitters for gauge pressure, dimensions in mm (inch)

© Siemens 2020

Technical specifications

SITRANS P410 for differential pressure and flow			
Input			
Measured variable	Differential pressure and flow		
Measuring span (infinitely adjustable) or nominal measuring range and maximum operating pressure (pursuant to 2014/68/EU Pressure Equipment Directive)	**HART**	**PROFIBUS PA/ FOUNDATION Fieldbus**	
	Measuring span	Nominal measuring range	Max. operating pressure MAWP (PS)
	2.5 ... 250 mbar 0.2 ... 25 kPa 1 ... 100 inH_2O	250 mbar 25 kPa 100 inH_2O	160 bar 16 MPa 2320 psi
	6 ... 600 mbar 0.6 ... 60 kPa 2.4 ... 240 inH_2O	600 mbar 60 kPa 240 inH_2O	
	16 ... 1600 mbar 1.6 ...160 kPa 6.4 ... 642 inH_2O	1600 mbar 160 kPa 642 inH_2O	
	50 ... 5000 mbar 5 ... 500 kPa 20 ... 2000 inH_2O	5000 mbar 500 kPa 2000 inH_2O	
	0.3 ... 30 bar 0.03 ... 3 MPa 4.35 ... 435 psi	30 bar 3 MPa 435 psi	
	6 ... 600 mbar 0.6 ... 60 kPa 2.4 ... 240 inH_2O	600 mbar 60 kPa 240 inH_2O	420 bar 42 MPa 6091 psi
	16 ... 1600 mbar 1.6 ...160 kPa 6.4 ... 642 inH_2O	1600 mbar 160 kPa 642 inH_2O	
	50 ... 5000 mbar 5 ... 500 kPa 20 ... 2000 inH_2O	5000 mbar 500 kPa 2000 inH_2O	
	0.3 ... 30 bar 0.03 ... 3 MPa 4.35 ... 435 psi	30 bar 3 MPa 435 psi	
Lower measuring limit			
• Measuring cell with silicone oil filling	-100 % of max. measuring span (-33 % with measuring cell 30 bar/3 MPa/435 psi) or 30 mbar a/3 kPa a/0.44 psi a		
Upper measuring limit	100 % of max. measuring span		
Lower range value	Between the measuring limits (fully adjustable)		
Output	**HART**	**PROFIBUS PA/ FOUNDATION Fieldbus**	
Output signal	4 ... 20 mA	Digital PROFIBUS PA and FOUNDATION Fieldbus signal	
• Lower limit (infinitely adjustable)	3.55 mA, factory preset to 3.84 mA	-	
• Upper limit (infinitely adjustable)	23 mA, factory preset to 20.5 mA or optionally set to 22.0 mA	-	
Load			
• Without HART	$R_B \leq (U_H - 10.5\ V)/0.023\ A$ in Ω, U_H: Power supply in V	-	
• With HART	R_B = 230 ... 500 Ω (SIMATIC PDM) or R_B = 230 ... 1100 Ω (HART Communicator)	-	
Physical bus	-	IEC 61158-2	
Protection against polarity reversal	Protected against short-circuit and polarity reversal. Each connection against the other with max. supply voltage.		
Electrical damping (step width 0.1 s)	Set to 2 s (0 ... 100 s)		

© Siemens 2020

SITRANS P410 for differential pressure and flow		
Measuring accuracy	Acc. to IEC 60770-1	
Reference conditions	• Increasing characteristic • Lower range value 0 bar/kPa/psi • Stainless steel seal diaphragm • Silicone oil filling • Room temperature 25 °C (77 °F)	
Measuring span ratio r (spread, Turn-Down)	r = max. measuring span/set measuring span or nominal measuring range	
Error in measurement at limit setting incl. hysteresis and reproducibility		
• Linear characteristic		
- 250 mbar/25 kPa/3.63 psi 600 mbar/60 kPa/8.7 psi 1600 mbar/160 kPa/23.21 psi 5 bar/500 kPa/72.5 psi 30 bar/3 MPa/435 psi	r ≤ 5 : 5 < r ≤ 100 :	≤ 0.04 % ≤ (0.004 · r + 0.045) %
• Square-rooted characteristic (flow > 50 %)		
- 250 mbar/25 kPa/3.63 psi 600 mbar/60 kPa/8.7 psi 1600 mbar/160 kPa/23.21 psi 5 bar/500 kPa/72.5 psi 30 bar/3 MPa/435 psi	r ≤ 5 : 5 < r ≤ 100 :	≤ 0.04 % ≤ (0.004 · r + 0.045) %
• Square-rooted characteristic (flow > 25 ... 50 %)		
- 250 mbar/25 kPa/3.63 psi 600 mbar/60 kPa/8.7 psi 1600 mbar/160 kPa/23.21 psi 5 bar/500 kPa/72.5 psi 30 bar/3 MPa/435 psi	r ≤ 5 : 5 < r ≤ 100 :	≤ 0.08 % ≤ (0.008 · r + 0.09) %
Influence of ambient temperature (in percent per 28 °C (50 °F))		
• 250 mbar/25 kPa/3.63 psi 600 mbar/60 kPa/8.7 psi 1600 mbar/160 kPa/23.21 psi 5 bar/500 kPa/72.5 psi 30 bar/3 MPa/435 psi	≤ (0.025 · r + 0.125) %	
Influence of static pressure		
• on the lower range value		
- 250 mbar/25 kPa/3.63 psi 600 mbar/60 kPa/8.7 psi 1600 mbar/160 kPa/23.21 psi	≤ (0.1 · r) % per 70 bar (zero offset is possible with position error adjustment)	
- 5 bar/500 kPa/72.5 psi 30 bar/3 MPa/435 psi	≤ (0.2 · r) % per 70 bar (zero offset is possible with position error adjustment)	
• on the measuring span		
- 250 mbar/25 kPa/3.63 psi 600 mbar/60 kPa/8.7 psi 1600 mbar/160 kPa/23.21 psi 5 bar/500 kPa/72.5 psi 30 bar/3 MPa/435 psi	≤ 0.14 % per 70 bar	
Long-term stability (temperature change ± 30 °C (± 54 °F))	Static pressure max. 70 bar/7 MPa/1015 psi	
• 250 mbar/25 kPa/3.63 psi 600 mbar/60 kPa/8.7 psi 1600 mbar/160 kPa/23.21 psi 5 bar/500 kPa/72.5 psi	≤ (0.125 · r) % in 5 years	
• 30 bar/3 MPa/435 psi	≤ (0.25 · r) % in 5 years	
Effect of mounting position (in pressure per change in angle)	≤ 0.7 mbar/0.07 kPa/0.028 inH_2O per 10° inclination (zero offset is possible with position error adjustment)	
Effect of auxiliary power supply (in percent per change in voltage)	0.005 % per 1 V	
Measuring value resolution for PROFIBUS PA and FOUNDATION Fieldbus	$3 \cdot 10^{-5}$ of nominal measuring range	

© Siemens 2020

SITRANS P410 for differential pressure and flow		
Operating conditions		
Degree of protection		
• according to EN 60529	IP66 (optional IP66/IP68)	
• according to NEMA 250	Type 4X	
Temperature of medium		
• Measuring cell with silicone oil filling	-40 ... +100 °C (-40 ... +212 °F) -20 ... +100 °C (-4 ... +212 °F) with 30 bar measuring cell	
• In conjunction with dust explosion protection	-20 ... +60 °C (-4 ... +140 °F)	
Ambient conditions		
• Ambient temperature		
- Transmitter	-40 ... +85 °C (-40 ... +185 °F)	
- Display readable	-30 ... +85 °C (-22 ... +185 °F)	
• Storage temperature	-50 ... +85 °C (-58 ... +185 °F)	
• Climatic class		
- Condensation	Relative humidity 0 ... 100 % Condensation permissible, suitable for use in the tropics	
• Electromagnetic Compatibility		
- Emitted interference and interference immunity	Acc. to IEC 61326 and NAMUR NE 21	
Design		
Weight (without options)	Die-cast aluminum: ≈ 4.5 kg (≈ 9.9 lb) Stainless steel precision casting: ≈ 7.1 kg (≈ 15.6 lb)	
Enclosure material	Low-copper die-cast aluminum, GD-AlSi12 or stainless steel precision casting, mat. no. 1.4408	
Wetted parts materials		
• Seal diaphragm	Stainless steel, mat. no. 1.4404/316L or Hastelloy C276, mat. no. 2.4819	
• Process flanges and sealing screw	Stainless steel, mat. no. 1.4408, Hastelloy C4, mat. no. 2.4602	
• O-Ring	FPM (Viton) or optionally: PTFE, FEP, FEPM and NBR	
Measuring cell filling	Silicone oil or inert filling liquid (maximum value with oxygen measurement pressure 100 bar (1450 psi) at 60 °C (140 °F))	
Process connection	Female thread ¼-18 NPT and flange connection with mounting thread M10 to DIN 19213 or $^{7}/_{16}$-20 UNF to IEC 61518/DIN EN 61518	
Material of mounting bracket		
• Steel	Sheet-steel, Mat. No. 1.0330, chrome-plated	
• Stainless steel 304	Sheet stainless steel, mat. no. 1.4301 (SS 304)	
• Stainless steel 316L	Sheet stainless steel, mat. no. 1.4404 (SS 316L)	
Power supply U_H	**HART**	**PROFIBUS PA/ FOUNDATION Fieldbus**
Terminal voltage on transmitter	10.5 ... 45 V DC 10.5 ... 30 V DC in intrinsically-safe mode	-
Power supply		Supplied through bus
Separate supply voltage	-	No
Bus voltage		
• Not Ex	-	9 ... 32 V
• With intrinsically-safe operation	-	9 ... 24 V
Current consumption		
• Basic current (max.)	-	12.5 mA
• Start-up current ≤ basic current	-	Yes
• Max. current in event of fault	-	15.5 mA
Fault disconnection electronics (FDE) available	-	Yes

© Siemens 2020

SITRANS P410 for differential pressure and flow		
Certificates and approvals	**HART**	**PROFIBUS PA/ FOUNDATION Fieldbus**
Classification according to PED 2014/68/EU	For gases of fluid group 1 and liquids of fluid group 1; complies with requirements of article 4, paragraph 3 (sound engineering practice)	
Explosion protection		
• Intrinsic safety "i"	PTB 13 ATEX 2007 X	
- Marking	Ex II 1/2 G Ex ia/ib IIC T4/T5/T6 Ga/Gb	
- Permissible ambient temperature	-40 ... +85 °C (-40 ... +185 °F) temperature class T4; -40 ... +70 °C (-40 ... +158 °F) temperature class T5; -40 ... +60 °C (-40 ... +140 °F) temperature class T6	
- Connection	To certified intrinsically-safe circuits with peak values: U_i = 30 V, I_i = 100 mA, P_i = 750 mW; R_i = 300 Ω	FISCO supply unit: U_o = 17.5 V, I_o = 380 mA, P_o = 5.32 W Linear barrier: U_o = 24 V, I_o = 250 mA, P_o = 1.2 W
- Effective internal inductance/capacitance	L_i = 0.4 mH, C_i = 6 nF	L_i = 7 µH, C_i = 1.1 nF
• Explosion-proof "d"	PTB 99 ATEX 1160	
- Marking	Ex II 1/2 G Ex d IIC T4/T6 Ga/Gb	
- Permissible ambient temperature	-40 ... +85 °C (-40 ... +185 °F) temperature class T4; -40 ... +60 °C (-40 ... +140 °F) temperature class T6	
- Connection	To circuits with values: U_H = 10.5 ... 45 V DC	To circuits with values: U_H = 9 ... 32 V DC
• Dust explosion protection for zone 20 (pending)	PTB 01 ATEX 2055	
- Marking	Ex II 1 D Ex ta IIIC T120°C Da Ex II 1/2 D Ex ta/tb IIIC T120°C Da/Db	
- Permissible ambient temperature	-40 ... +85 °C (-40 ... +185 °F)	
- Max. surface temperature	120 °C (248 °F)	
- Connection	To certified intrinsically-safe circuits with peak values: U_i = 30 V, I_i = 100 mA, P_i = 750 mW, R_i = 300 Ω	FISCO supply unit: U_o = 17.5 V, I_o = 380 mA, P_o = 5.32 W Linear barrier: U_o = 24 V, I_o = 250 mA, P_o = 1 W
- Effective internal inductance/capacitance	L_i = 0.4 mH, C_i = 6 nF	L_i = 7 µH, C_i = 1.1 nF
• Dust explosion protection for zone 21/22 (pending)	PTB 01 ATEX 2055	
- Marking	Ex II 2 D Ex tb IIIC T120°C Db	
- Connection	To circuits with values: U_H = 10.5 ... 45 V DC; P_{max} = 1.2 W	To circuits with values: U_H = 9 ... 32 V DC; P_{max} = 1 W
• Type of protection "n" (zone 2)	PTB 13 ATEX 2007 X	
- Marking	Ex II 2/3 G Ex nA IIC T4/T5/T6 Gb/Gc Ex II 2/3 G Ex ic IIC T4/T5/T6 Gb/Gc	
- Connection (Ex nA)	U_m = 45 V	U_m = 32 V
- Connection (Ex ic)	To circuits with values: U_i = 45 V	FISCO supply unit ic: U_o = 17.5 V, I_o = 570 mA Linear barrier: U_o = 32 V, I_o = 132 mA, P_o = 1 W
- Effective internal inductance/capacitance	L_i = 0.4 mH, C_i = 6 nF	L_i = 7 µH, C_i = 1.1 nF
• Explosion protection acc. to FM (pending)	Certificate of Compliance 3008490	
- Identification (XP/DIP) or (IS); (NI)	CL I, DIV 1, GP ABCD T4...T6; CL II, DIV 1, GP EFG; CL III; CL I, ZN 0/1 AEx ia IIC T4...T6; CL I, DIV 2, GP ABCD T4...T6; CL II, DIV 2, GP FG; CL III	
• Explosion protection to CSA (pending)	Certificate of Compliance 1153651	
- Identification (XP/DIP) or (IS)	CL I, DIV 1, GP ABCD T4...T6; CL II, DIV 1, GP EFG; CL III; Ex ia IIC T4...T6; CL I, DIV 2, GP ABCD T4...T6; CL II, DIV 2, GP FG; CL III	

© Siemens 2020

HART communication	
HART	230 ... 1100 Ω
Protocol	HART Version 5.x
Software for PC	SIMATIC PDM
PROFIBUS PA communication	
Simultaneous communication with master class 2 (max.)	4
The address can be set using	Configuration tool or local operation (standard setting address 126)
Cyclic data usage	
• Output byte	5 (one measured value) or 10 (two measured values)
• Input byte	0, 1, or 2 (register operating mode and reset function for metering)
Internal preprocessing	
Device profile	PROFIBUS PA Profile for Process Control Devices Version 3.0, class B
Function blocks	2
• Analog input	
- Adaptation to customer-specific process variables	Yes, linearly rising or falling characteristic
- Electrical damping, adjustable	0 ... 100 s
- Simulation function	Input /Output
- Failure mode	parameterizable (last good value, substitute value, incorrect value)
- Limit monitoring	Yes, one upper and lower warning limit and one alarm limit respectively
• Register (totalizer)	Can be reset, preset, optional direction of counting, simulation function of register output
- Failure mode	parameterizable (summation with last good value, continuous summation, summation with incorrect value)
- Limit monitoring	One upper and lower warning limit and one alarm limit respectively
• Physical block	1
Transducer blocks	2
• Pressure transducer block	
- Can be calibrated by applying two pressures	Yes
- Monitoring of sensor limits	Yes
- Specification of a container characteristic with	Max. 30 nodes
- Square-rooted characteristic for flow measurement	Yes
- Gradual volume suppression and implementation point of square-root extraction	Parameterizable
- Simulation function for measured pressure value and sensor temperature	Constant value or over parameterizable ramp function

FOUNDATION Fieldbus communication	
Function blocks	3 function blocks analog input, 1 function block PID
• Analog input	
- Adaptation to customer-specific process variables	Yes, linearly rising or falling characteristic
- Electrical damping, adjustable	0 ... 100 s
- Simulation function	Output/input (can be locked within the device with a bridge)
- Failure mode	parameterizable (last good value, substitute value, incorrect value)
- Limit monitoring	Yes, one upper and lower warning limit and one alarm limit respectively
- Square-rooted characteristic for flow measurement	Yes
• PID	Standard FOUNDATION Fieldbus function block
• Physical block	1 resource block
Transducer blocks	1 transducer block Pressure with calibration, 1 transducer block LCD
• Pressure transducer block	
- Can be calibrated by applying two pressures	Yes
- Monitoring of sensor limits	Yes
- Simulation function: Measured pressure value, sensor temperature and electronics temperature	Constant value or over parameterizable ramp function

© Siemens 2020

Selection and Ordering data		Article No.	Order Code
SITRANS P410 with HART pressure transmitters for differential pressure and flow, PN 160 (MAWP 2320 psi)		↗ **7MF4433-** ■■■■■ - ■■■■	**-Z C41**
↗ Click on the Article No. for the online configuration in the PIA Life Cycle Portal.			
Measuring cell filling	**Measuring cell cleaning**		
Silicone oil	normal	1	
Measuring span (min. ... max.)			
2.5 ... 250 mbar	(1.004 ... 100.4 inH_2O)	D	
6 ... 600 mbar	(2.409 ... 240.9 inH_2O)	E	
16 ... 1600 mbar	(6.424 ... 642.4 inH_2O)	F	
50 ... 5000 mbar	(20.08 ... 2008 inH_2O)	G	
0.3 ... 30 bar	(4.35 ... 435 psi)	H	
Wetted parts materials			
(stainless steel process flanges)			
Seal diaphragm	Parts of measuring cell		
Stainless steel	Stainless steel	A	
Hastelloy	Stainless steel	B	
Hastelloy	Hastelloy	C	
Version for diaphragm seal[1) 2) 3) 4)]		Y	
Process connection			
Female thread ¼-18 NPT with flange connection			
• Sealing screw opposite process connection			
- Mounting thread $^{7}/_{16}$-20 UNF to IEC 61518/DIN EN 61518		2	
- Mounting thread M10 to DIN 19213 (only for replacement requirement)		0	
• Vent on side of process flange[5)]			
- Mounting thread $^{7}/_{16}$-20 UNF to IEC 61518/DIN EN 61518		6	
- Mounting thread M10 to DIN 19213 (only for replacement requirement)		4	
Non-wetted parts materials			
process flange screws	Electronics enclosure		
Stainless steel	Die-cast aluminum	2	
Stainless steel	Stainless steel precision casting[6)]	3	
Version			
• Standard version, German plate inscription, setting for pressure unit: bar		1	
• International version, English plate inscription, setting for pressure unit: bar		2	
• Chinese version, English plate inscription, setting for pressure unit: Pascal		3	
All versions include DVD with compact operating instructions in various EU languages.			
Explosion protection			
• None		A	
• With ATEX, Type of protection:			
- "Intrinsic safety (Ex ia)"		B	
- "Explosion-proof (Ex d)"[7)]		D	
- "Intrinsic safety and flameproof enclosure" (Ex ia + Ex d)"[8)]		P	
- "Ex nA/ic (Zone 2)"[9)]		E	
- "Intrinsic safety, explosion-proof enclosure and dust explosion protection (Ex ia+ Ex d + Zone 1D/2D)"[8)10)]		R	
• FM + CSA intrinsic safe (is) (pending)[11)]		F	
• FM + CSA (is + ep) + Ex ia + Ex d (ATEX) + Zone 1D/2D[8)10)11)]		S	
• With FM + CSA, Type of protection:			
- "Intrinsic Safe and Explosion Proof (is + xp)"[7)11)]		N	C

© Siemens 2020

Selection and Ordering data	Article No.	Order Code
SITRANS P410 with HART pressure transmitters for differential pressure and flow, PN 160 (MAWP 2320 psi)	**7MF4433-** ■■■■■ - ■■■■	**-Z C41**
Electrical connection/cable entry		
• Screwed gland M20 x 1.5	B	
• Screwed gland ½-14 NPT	C	
• Device plug Han 7D (plastic enclosure) incl. mating connector[12)13)]	D	
• Device plugs M12 (stainless steel)[14)15)]	F	
Display		
• Without display	0	
• Without visible display (display concealed, setting: mA)	1	
• With visible display (setting: mA)	6	
• with customer-specific display (setting as specified, Order code "Y21" or "Y22" required)	7	

Power supply units see Chap. 7 "Supplementary Components".

Included in delivery of the device:
- Quick-start guide
- Sealing plug(s) or sealing screw(s) for the process flanges(s)

1) When the manufacture's certificate (calibration certificate) has to be ordered for transmitters with diaphragm seals according to IEC 60770-2, it is recommended only to order this certificate exclusively with the diaphragm seals. The measuring accuracy of the total combination is certified here.

2) If the inspection certificate 3.1.is ordered for the transmitter with mounted diaphragm seals this certificate must also be ordered with the respective remote seals.

3) The diaphragm seal is to be specified with a separate order number and must be included wiht the transmitter order number, for example 7MF443.-..Y..-.... and 7MF4900-1...-.B

4) The standard measuring cell filling for configurations with remote seals (Y) is silicone oil.

5) Not suitable for connection of remote seal. Position of the top vent valve in the process flange (see dimensional drawing).

6) Not in conjunction with Electrical connection "device plug Han 7D".

7) Without cable gland, with blanking plug

8) With enclosed cable gland Ex ia and blanking plug

9) Configurations with device plugs Han and M12 are only available in Ex ic.

10) Only in connection with IP66.

11) Explosion protection acc. to FM/CSA: suitable for installations according to NEC 500/505.

12) Only in connection with Ex approval A, B or E.

13) Permissible only for crimp-contact of conductor cross-section 1 mm^2

14) Only in connection with Ex approval A, B, E or F.

15) M12 delivered without cable socket.

© Siemens 2020

Selection and Ordering data	Article No.	Order code
Pressure transmitters for differential pressure and flow PN 160 (MAWP 2320 psi)		
SITRANS P410 with PROFIBUS PA (PA) ↗	**7MF4434-** ■■■■■ - ■■■	**-Z C41**
SITRANS P410 with FOUNDATION Fieldbus (FF) ↗	**7MF4435-** ■■■■■ - ■■■	**-Z C41**
↗ Click on the Article No. for the online configuration in the PIA Life Cycle Portal.		
Measuring cell filling / **Measuring cell cleaning**		
Silicone oil / normal	1	
Nominal measuring range		
250 mbar (100.4 inH_2O)	D	
600 mbar (240.9 inH_2O)	E	
1600 mbar (642.4 inH_2O)	F	
5 bar (2008 inH_2O)	G	
30 bar (435 psi)	H	
Wetted parts materials (stainless steel process flanges)		
Seal diaphragm / Parts of measuring cell		
Stainless steel / Stainless steel	A	
Hastelloy / Stainless steel	B	
Hastelloy / Hastelloy	C	
Version as diaphragm seal [1) 2) 3) 4)]	Y	
Process connection		
Female thread ¼-18 NPT with flange connection		
• Sealing screw opposite process connection		
- Mounting thread $^{7}/_{16}$-20 UNF to IEC 61518/DIN EN 61518	2	
- Mounting thread M10 to DIN 19213 (only for replacement requirement)	0	
• Venting on side of process flanges [5)]		
- Mounting thread $^{7}/_{16}$-20 UNF to IEC 61518/DIN EN 61518	6	
- Mounting thread M10 to DIN 19213 (only for replacement requirement)	4	
Non-wetted parts materials		
process flange screws / Electronics enclosure		
Stainless steel / Die-cast aluminum	2	
Stainless steel / Stainless steel precision casting	3	
Version		
• Standard version, German plate inscription, setting for pressure unit: bar	1	
• International version, English plate inscription, setting for pressure unit: bar	2	
• Chinese version, English plate inscription, setting for pressure unit: Pascal	3	
All versions include DVD with compact operating instructions in various EU languages.		
Explosion protection		
• None	A	
• With ATEX, Type of protection:		
- "Intrinsic safety (Ex ia)"	B	
- "Explosion-proof (Ex d)"[6)]	D	
- "Intrinsic safety and flameproof enclosure" (Ex ia + Ex d)"[7)]	P	
- "Ex nA/ic (Zone 2)" [8)]	E	
- "Intrinsic safety, explosion-proof enclosure and dust explosion protection (Ex ia + Ex d + Zone 1D/2D)"[7) 9)](not for DS III FF)	R	
• FM + CSA intrinsic safe (is) (pending)[10)]	F	
• FM + CSA (is + ep) + Ex ia + Ex d (ATEX) + Zone 1D/2D[7)9)10)]	S	
• With FM + CSA, Type of protection:		
- "Intrinsic Safe and Explosion Proof (is + xp)"[8)10)]	N	C
Electrical connection/cable entry		
• Screwed gland M20 x 1.5		B
• Screwed gland ½-14 NPT		C
• Device plugs M12 (stainless steel)[11) 12)]		F

© Siemens 2020

Selection and Ordering data	Article No.	Order code
Pressure transmitters for differential pressure and flow PN 160 (MAWP 2320 psi)		
SITRANS P410 with PROFIBUS PA (PA)	**7MF4434-** ■■■■■ - ■■■■	**-Z C41**
SITRANS P410 with FOUNDATION Fieldbus (FF)	**7MF4435-** ■■■■■ - ■■■■	**-Z C41**
Display		
• Without display	**0**	
• Without visible display (display concealed, setting: bar)	**1**	
• With visible display (setting: bar)	**6**	
• With customer-specific display (setting as specified, Order code "Y21" required)	**7**	

Included in delivery of the device:
• Quick-start guide
• Sealing plug(s) or sealing screw(s) for the process flanges(s)

1) When the manufacture's certificate (calibration certificate) has to be ordered for transmitters with diaphragm seals according to IEC 60770-2, it is recommended only to order this certificate exclusively with the diaphragm seals. The measuring accuracy of the total combination is certified here.
2) If the inspection certificate 3.1.is ordered for the transmitter with mounted diaphragm seals this certificate must also be ordered with the respective remote seals.
3) The diaphragm seal is to be specified with a separate order number and must be included wiht the transmitter order number, for example 7MF443.-..Y..-.... and 7MF4900-1...-.B
4) The standard measuring cell filling for configurations with remote seals (Y) is silicone oil.
5) Not suitable for connection of remote seal. Position of the top vent valve in the process flange (see dimensional drawing).
6) Without cable gland, with blanking plug.
7) With enclosed cable gland Ex ia and blanking plug.
8) Configurations with device plugs Han and M12 are only available in Ex ic.
9) Only in connection with IP66.
10) Explosion protection acc. to FM/CSA: suitable for installations according to NEC 500/505.
11) Only in connection with Ex approval A, B, E or F.
12) M12 delivered without cable socket

© Siemens 2020

Selection and Ordering data	Order code	HART	PA	FF
Further designs Add "**-Z**" to Article No. and specify Order code.				
Pressure transmitter with mounting bracket (1x fixing angle, 2 x nut, 2 x U-washer or 1 x bracket, 2 x nut, 2 x U-washer) made of:				
• Steel	**A01**	✓	✓	✓
• Stainless steel 304	**A02**	✓	✓	✓
• Stainless steel 316L	**A03**	✓	✓	✓
O-rings for process flanges (instead of FPM (Viton))				
• PTFE (Teflon)	**A20**	✓	✓	✓
• FEP (with silicone core, approved for food)	**A21**	✓	✓	✓
• FFPM (Kalrez, for measured medium temperatures -15 ... 100 °C (5 ... 212 °F))	**A22**	✓	✓	✓
• NBR (Buna N)	**A23**	✓	✓	✓
Device plugs[1)]				
• Han 7D (metal)	**A30**	✓		
• Han 8D (instead of Han 7D)	**A31**	✓		
• Angled	**A32**	✓		
• Han 8D (metal)	**A33**	✓		
Sealing screws (2 units) ¼-18 NPT, with vent valve in mat. of process flanges	**A40**	✓	✓	✓
Cable sockets for device plugs M12 (metal (CuZn))	**A50**	✓	✓	✓
Rating plate inscription (instead of German)				
• English	**B11**	✓	✓	✓
• French	**B12**	✓	✓	✓
• Spanish	**B13**	✓	✓	✓
• Italian	**B14**	✓	✓	✓
English rating plate Pressure units in inH_2O and/or psi	**B21**	✓	✓	✓
Quality test certificate, 5-point factory calibration (IEC 60770-2)[2)]	**C11**	✓	✓	✓
Inspection certificate[3)] to EN 10204-3.1	**C12**	✓	✓	✓
Factory certificate to EN 10204-2.2	**C14**	✓	✓	✓
Inspection certificate (EN 10204-3.1) PMI test of parts in contact with medium	**C15**	✓	✓	✓
Functional safety (SIL2) (pending) Devices suitable for use according to IEC 61508 and IEC 61511. Includes SIL conformity declaration	**C20**	✓		
Functional safety (SIL2/3) Devices suitable for use according to IEC 61508 and IEC 61511. Includes SIL conformity declaration	**C23**	✓		
Increased measuring accuracy (mandatory specification for SITRANS P410)	**C41**	✓	✓	✓
PED for Russia with initial calibration mark	**C99**	✓	✓	✓

Selection and Ordering data	Order code	HART	PA	FF
Further designs Add "**-Z**" to Article No. and specify Order code.				
Setting of the upper saturation limit of the output signal to 22.0 mA	**D05**	✓		
Manufacturer's declaration acc. to NACE (MR 0103-2012 and MR 0175-2009) (only together with seal diaphragm made of Hastelloy and stainless steel)	**D07**	✓	✓	✓
Degree of protection IP66/IP68 (only for M20 x 1.5 and ½-14 NPT)	**D12**	✓	✓	✓
Supplied with oval flange set (2 items), PTFE packings and screws in thread of process flanges	**D37**	✓	✓	✓
Capri cable gland 4F CrNi and clamping device (848699 + 810634) included	**D59**	✓	✓	✓
TAG plate empty (no inscription)	**D61**	✓	✓	✓
Use in or on zone 1D/2D[4)] (only together with type of protection "Intrinsic safety" (transmitter 7MF4...-.....-.B.. Ex ia)"and IP66)	**E01**	✓	✓	✓
Dual seal	**E24**	✓	✓	✓
Explosion-proof "Intrinsic safety" to NEPSI (China) (only for transmitter 7MF4...-.....-.B..)	**E55**[5)]	✓	✓	✓
Explosion protection "Explosion-proof" to NEPSI (China) (only for transmitter 7MF4...-.....-.D..)	**E56**[5)]	✓	✓	✓
Explosion-proof "Zone 2" to NEPSI (China) (only for transmitter 7MF4...-.....-.E..)	**E57**[5)]	✓	✓	✓
Ex protection „Ex ia", „Ex d" and „Zone 2" to NEPSI (China) (only for transmitter 7MF4...-.....-.R..)	**E58**[5)]	✓	✓	✓
"Intrinsic safety" and "Explosion-proof" explosion protection acc. to Kosha (Korea) (pending) (only for transmitter 7MF4...-.....-.[B, D]..-Z + E11)	**E70**[5)]	✓	✓	✓
Ex-protection Ex ia according to EAC Ex (Russia)	**E80**	✓	✓	✓
Ex-protection Ex d according to EAC Ex (Russia)	**E81**	✓	✓	✓
Ex-protection Ex nA/ic (Zone 2) according to EAC Ex (Russia)	**E82**	✓	✓	✓
Ex-protection Ex ia + Ex d + Zone 1D/2D according to EAC Ex (Russia)	**E83**	✓	✓	✓
Two coats of lacquer on enclosure and cover (PU on epoxy)	**G10**	✓	✓	✓
Interchanging of process connection side	**H01**	✓	✓	✓
Vent on side for gas measurements	**H02**	✓	✓	✓
Stainless steel process flanges for vertical differential pressure lines (not together with K01, K02 and K04)[6)]	**H03**	✓	✓	✓

© Siemens 2020

Selection and Ordering data	Order code	HART	PA	FF
Further designs Add "**-Z**" to Article No. and specify Order code.				
Transient protector 6 kV (lightning protection)	**J01**	✓	✓	✓
Chambered graphite gasket for process flange	**J02**	✓	✓	✓
Chambered PTFE graphite gasket	**J03**	✓	✓	✓
EPDM O-rings for process flange with approval (WRC/WRAS)	**J05**	✓	✓	✓
Vent valve or blanking plug of process flange welded-in (orientation: on right when viewing the display)[7]	**J08**	✓	✓	✓
Vent valve or blanking plug of process flange welded-in (orientation: on left when viewing the display)[7]	**J09**	✓	✓	✓
Marine approvals				
• Det Norske Veritas Germanischer Lloyd (DNV-GL)	**S10**	✓	✓	✓
• Lloyds Register (LR)	**S11**	✓	✓	✓
• French marine classification society Bureau Veritas (BV)	**S12**	✓	✓	✓
• American Bureau of Shipping (ABS)	**S14**	✓	✓	✓
• Russian Maritime Register (RMR)	**S16**	✓	✓	✓
• Korean Register of Shipping (KR)	**S17**	✓	✓	✓

Factor valve block mounting for SITRANS P410 is possible. Depending on the available P410 variants, please see the configuration options for SITRANS P DS III (page 1/253).

✓ = available

1) Device plug Han IP65
2) When the manufacture's certificate (calibration certificate) has to be ordered for transmitters with diaphragm seals according to IEC 60770-2, it is recommended only to order this certificate exclusively with the diaphragm seals. The measuring accuracy of the total combination is certified here.
3) If the inspection certificate 3.1.is ordered for the transmitter with mounted diaphragm seals this certificate must also be ordered with the respective remote seals.
4) Option does not contain gas explosion protection; only dust explosion protection: Use in or at Zone 1D/2D
5) When the additional ex option is selected, the ATEX marking on the device is omitted. Only the Ex option selected via the Z option is marked.
6) Not suitable for connection of remote seal.
7) Blanking plug is standard configuration. Order option A40 if a vent valve is required instead of a blanking plug.

Selection and Ordering data	Order code	HART	PA	FF
Additional data Please add "**-Z**" to Article No. and specify Order code(s) and plain text.				
Measuring range to be set Specify in plain text:				
• in the case of linear characteristic curve (max. 5 characters): Y01: ... up to ... mbar, bar, kPa, MPa, psi	**Y01**	✓	✓[1]	
• in the case of square rooted characteristic (max. 5 characters): Y02: ... up to ... mbar, bar, kPa, MPa, psi	**Y02**	✓		
Stainless steel tag plate and entry in device variable (measuring point description) Max. 16 characters, specify in plain text: Y15:	**Y15**	✓	✓	✓
Measuring point text (entry in device variable) Max. 27 char., specify in plain text: Y16:	**Y16**	✓	✓	✓
Entry of HART address (TAG) Max. 8 char., specify in plain text: Y17:	**Y17**	✓		
Setting of pressure indicator in pressure units Specify in plain text (standard setting: bar): Y21: mbar, bar, kPa, MPa, psi, ... Note: The following pressure units can be selected: bar, mbar, mm H_2O*), inH_2O*), ftH_2O*), mmHG, inHG, psi, Pa, kPa, MPa, g/cm^2, kg/cm^2, Torr, ATM or % *) ref. temperature 20 °C	**Y21**	✓	✓	✓
Setting of pressure indicator in non-pressure units[2] Specify in plain text: Y22: ..... up to ..... l/min, m^3/h, m, USgpm, ... (specification of measuring range in pressure units "Y01" or "Y02" is essential, unit with max. 5 characters)	**Y22[3] + Y01** *or* **Y02**	✓		
Preset bus address possible between 1 and 126 Specify in plain text: Y25:	**Y25**		✓	✓
Damping adjustment in seconds (0 ... 100 s)	**Y30**	✓	✓	✓

Only Y01, Y15, Y16, Y17, Y21, Y22, Y25 and D05 can be factory preset

✓ = available

1) Measuring accuracies for PROFIBUS PA transmitters with Option Y01 are calculated in the same way as for HART devices.
2) Preset values can only be changed over SIMATIC PDM.
3) Not in conjunction with over-filling safety device for flammable and non-flammable liquids (Order code "E08")

© Siemens 2020

Selection and Ordering data		Article No.	Order code
SITRANS P DS III with HART pressure transmitters for differential pressure and flow, PN 420 (MAWP 6092 psi)		↗ **7MF4533-** ■■■■■ - ■■■■	**-Z C41**
↗ Click on the Article No. for the online configuration in the PIA Life Cycle Portal.			
Measuring cell filling	**Measuring cell cleaning**		
Silicone oil	normal	1	
Measuring span (min. ... max.)			
6 ... 600 mbar	(2.4 ... 240 inH_2O)	E	
16 ... 1600 mbar	(6.4 ... 642 inH_2O)	F	
50 ... 5000 mbar	(20 ... 2000 inH_2O)	G	
0.3 ... 30 bar	(4.35 ... 435 psi)	H	
Wetted parts materials			
(stainless steel process flanges)			
Seal diaphragm	Parts of measuring cell		
Stainless steel	Stainless steel	A	
Hastelloy	Stainless steel	B	
Version for diaphragm seal [1) 2) 3) 4)]		Y	
Process connection			
Female thread ¼-18 NPT with flange connection			
• Sealing screw opposite process connection			
- Mounting thread $^7/_{16}$-20 UNF to IEC 61518/DIN EN 61518		3	
- Mounting thread M12 to DIN 19213 (only for replacement requirement)		1	
• Venting on side of process flanges, location of vent valve at top of process flanges (see dimensional drawing)			
- Mounting thread $^7/_{16}$-20 UNF to IEC 61518/DIN EN 61518		7	
- Mounting thread M12 to DIN 19213 (only for replacement requirement)		5	
Non-wetted parts materials			
process flange screws	Electronics enclosure		
Stainless steel	Die-cast aluminum	2	
Stainless steel	Stainless steel precision casting[5)]	3	
Version			
• Standard version, German plate inscription, setting for pressure unit: bar		1	
• International version, English plate inscription, setting for pressure unit: bar		2	
• Chinese version, English plate inscription, setting for pressure unit: Pascal		3	
All versions include DVD with compact operating instructions in various EU languages.			
Explosion protection			
• None		A	
• With ATEX, Type of protection:			
- "Intrinsic safety (Ex ia)"		B	
- "Explosion-proof (Ex d)"[6)]		D	
- "Intrinsic safety and flameproof enclosure" (Ex ia + Ex d)"[7)]		P	
- "Ex nA/ic (Zone 2)"[8)]		E	
- "Intrinsic safety, explosion-proof enclosure and dust explosion protection (Ex ia+ Ex d + Zone 1D/2D)"[7)9)]		R	
• FM + CSA intrinsic safe (is) (pending)[10)]		F	
• FM + CSA (is + ep) + Ex ia + Ex d (ATEX) + Zone 1D/2D[7)9)10)]		S	
• With FM + CSA, Type of protection:			
- "Intrinsic safety and explosion-proof (is + xp)" [6)10)], max PN 360		N	C
Electrical connection/cable entry			
• Screwed gland M20x1.5			B
• Screwed gland ½-14 NPT			C
• Device plug Han 7D (plastic enclosure) incl. mating connector[11) 12)]			D
• Device plugs M12 (stainless steel)[13)14)]			F

© Siemens 2020

Selection and Ordering data	Article No.	Order code
SITRANS P DS III with HART pressure transmitters for differential pressure and flow, PN 420 (MAWP 6092 psi)	**7MF4533-** ■■■■■ - ■■■■	**-Z C41**
Display		
• Without display	**0**	
• Without visible display (display concealed, setting: mA)	**1**	
• With visible display (setting: mA)	**6**	
• with customer-specific display (setting as specified, Order code "Y21" or "Y22" required)	**7**	

Power supply units see Chap. 7 "Supplementary Components".

Scope of delivery: Pressure transmitter as ordered (Instruction Manual is extra ordering item)

1) When the manufacture's certificate (calibration certificate) has to be ordered for transmitters with diaphragm seals according to IEC 60770-2, it is recommended only to order this certificate exclusively with the diaphragm seals. The measuring accuracy of the total combination is certified here.
2) If the inspection certificate 3.1.is ordered for the transmitter with mounted diaphragm seals this certificate must also be ordered with the respective remote seals.
3) The diaphragm seal is to be specified with a separate order number and must be included wiht the transmitter order number, for example 7MF453.-..Y..-.... and 7MF4900-1....-.B
4) The standard measuring cell filling for configurations with remote seals (Y) is silicone oil.
5) Not in conjunction with Electrical connection "device plug Han 7D".
6) Without cable gland, with blanking plug
7) With enclosed cable gland Ex ia and blanking plug
8) Configurations with device plugs Han and M12 are only available in Ex ic.
9) Only in connection with IP66.
10) Explosion protection acc. to FM/CSA: suitable for installations according to NEC 500/505.
11) Only in connection with Ex approval A, B or E.
12) Permissible only for crimp-contact of conductor cross-section 1 mm^2
13) Only in connection with Ex approval A, B, E or F.
14) M12 delivered without cable socket.

© Siemens 2020

Selection and Ordering data		Article No.	Order Code
Pressure transmitters for differential pressure and flow, PN 420 (MAWP 6092 psi)			
SITRANS P410 with PROFIBUS PA (PA)		↗ **7MF4534-** ■■■■■ - ■■■■	**-Z C41**
SITRANS P410 with FOUNDATION Fieldbus (FF)		↗ **7MF4535-** ■■■■■ - ■■■■	**-Z C41**
↗ Click on the Article No. for the online configuration in the PIA Life Cycle Portal.			
Measuring cell filling	**Measuring cell cleaning**		
Silicone oil	normal	1	
Nominal measuring range			
600 mbar	(240 inH_2O)	E	
1600 mbar	(642 inH_2O)	F	
5 bar	(2000 inH_2O)	G	
30 bar	(435 psi)	H	
Wetted parts materials			
(stainless steel process flanges)			
Seal diaphragm	Parts of measuring cell		
Stainless steel	Stainless steel	A	
Hastelloy	Stainless steel	B	
Version for diaphragm seal [1) 2) 3) 4)]		Y	
Process connection			
Female thread ¼-18 NPT with flange connection			
• Sealing screw opposite process connection			
- Mounting thread $^{7}/_{16}$-20 UNF to IEC 61518/DIN EN 61518		3	
- Mounting thread M12 to DIN 19213 (only for replacement requirement)		1	
• Venting on side of process flanges, location of vent valve at top of process flanges (see dimensional drawing).			
- Mounting thread $^{7}/_{16}$-20 UNF to IEC 61518/DIN EN 61518		7	
- Mounting thread M12 to DIN 19213 (only for replacement requirement)		5	
Non-wetted parts materials			
Process flange screws	Electronics enclosure		
Stainless steel	Die-cast aluminum	2	
Stainless steel	Stainless steel precision casting	3	
Version			
• Standard version, German plate inscription, setting for pressure unit: bar		1	
• International version, English plate inscription, setting for pressure unit: bar		2	
• Chinese version, English plate inscription, setting for pressure unit: Pascal		3	
All versions include DVD with compact operating instructions in various EU languages.			
Explosion protection			
• None		A	
• With ATEX, Type of protection:			
- "Intrinsic safety (Ex ia)"		B	
- "Explosion-proof (Ex d)"[5)]		D	
- "Intrinsic safety and flameproof enclosure" (Ex ia + Ex d)"[6)]		P	
- "Ex nA/ic (Zone 2)" [7)]		E	
- "Intrinsic safety, explosion-proof enclosure and dust explosion protection (Ex ia + Ex d + Zone 1D/2D)"[6)8)]		R	
• FM + CSA intrinsic safe (is) (pending)[9)]		F	
• FM + CSA (is + ep) + Ex ia + Ex d (ATEX) + Zone 1D/2D[6)7)9)]		S	
• With FM + CSA, Type of protection:			
- "Intrinsic safety and explosion-proof (is + xp)"[6)9)], max PN 360		N	C
Electrical connection/cable entry			
• Screwed gland M20 x 1.5			B
• Screwed gland ½-14 NPT			C
• Device plugs M12 (stainless steel) [10) 11)]			F

© Siemens 2020

Selection and Ordering data	Article No.	Order Code
Pressure transmitters for differential pressure and flow, PN 420 (MAWP 6092 psi)		
SITRANS P410 with PROFIBUS PA (PA)	**7MF4534-** ■■■■■ - ■■■■	**-Z C41**
SITRANS P410 with FOUNDATION Fieldbus (FF)	**7MF4535-** ■■■■■ - ■■■■	**-Z C41**
Display		
• Without (display hidden)	**0**	
• Without visible display (display concealed, setting: bar)	**1**	
• With visible display (setting: bar)	**6**	
• With customer-specific display (setting as specified, Order code "Y21" required)	**7**	

Included in delivery of the device:
• Quick-start guide
• Sealing plug(s) or sealing screw(s) for the process flanges(s)

1) When the manufacture's certificate (calibration certificate) has to be ordered for transmitters with diaphragm seals according to IEC 60770-2, it is recommended only to order this certificate exclusively with the diaphragm seals. The measuring accuracy of the total combination is certified here.
2) If the inspection certificate 3.1.is ordered for the transmitter with mounted diaphragm seals this certificate must also be ordered with the respective remote seals.
3) The diaphragm seal is to be specified with a separate order number and must be included wiht the tranmitter order number, for example 7MF453.-..Y..-.... and 7MF4900-1....-.B
4) The standard measuring cell filling for configurations with remote seals (Y) is silicone oil.
5) Without cable gland, with blanking plug.
6) With enclosed cable gland Ex ia and blanking plug.
7) Configurations with device plugs Han and M12 are only available in Ex ic.
8) Only in connection with IP66.
9) Explosion protection acc. to FM/CSA: suitable for installations according to NEC 500/505.
10) Only in connection with Ex approval A, B, E or F.
11) M12 delivered without cable socket

© Siemens 2020

Selection and Ordering data	Order code	HART	PA	FF
Further designs Add "**-Z**" to Article No. and specify Order code.				
Pressure transmitter with mounting bracket (1x fixing angle, 2 x nut, 2 x U-washer or 1 x bracket, 2 x nut, 2 x U-washer) made of:				
• Steel	**A01**	✓	✓	✓
• Stainless steel 304	**A02**	✓	✓	✓
• Stainless steel 316L	**A03**	✓	✓	✓
O-rings for process flanges (instead of FPM (Viton))				
• PTFE (Teflon)	**A20**	✓	✓	✓
• FEP (with silicone core, approved for food)	**A21**	✓	✓	✓
• FFPM (Kalrez, for measured medium temperatures -15 ... 100 °C (5 ... 212 °F))	**A22**	✓	✓	✓
• NBR (Buna N)	**A23**	✓	✓	✓
Device plugs[1]				
• Han 7D (metal)	**A30**	✓		
• Han 8D (instead of Han 7D)	**A31**	✓		
• Angled	**A32**	✓		
• Han 8D (metal)	**A33**	✓		
Sealing screws (2 units) ¼-18 NPT, with vent valve in mat. of process flanges	**A40**	✓	✓	✓
Cable sockets for device plugs M12 (metal (CuZn))	**A50**	✓	✓	✓
Rating plate inscription (instead of German)				
• English	**B11**	✓	✓	✓
• French	**B12**	✓	✓	✓
• Spanish	**B13**	✓	✓	✓
• Italian	**B14**	✓	✓	✓
English rating plate Pressure units in inH_2O and/or psi	**B21**	✓	✓	✓
Quality test certificate, 5-point factory calibration (IEC 60770-2)	**C11**	✓	✓	✓
Inspection certificate Acc. to EN 10204-3.1	**C12**	✓	✓	✓
Factory certificate Acc. to EN 10204-2.2	**C14**	✓	✓	✓
Functional safety (SIL2) (pending) Devices suitable for use according to IEC 61508 and IEC 61511. Includes SIL conformity declaration	**C20**	✓		
Functional safety (SIL2/3) Devices suitable for use according to IEC 61508 and IEC 61511. Includes SIL conformity declaration	**C23**	✓		
Increased measuring accuracy (mandatory specification for SITRANS P410)	**C41**	✓	✓	✓
PED for Russia with initial calibration mark	**C99**	✓	✓	✓
Setting of the upper saturation limit of the output signal to 22.0 mA	**D05**	✓		
Manufacturer's declaration acc. to NACE (MR 0103-2012 and MR 0175-2009) (only together with seal diaphragm made of Hastelloy and stainless steel)	**D07**	✓	✓	✓
Degree of protection IP66/IP68 (only for M20 x 1.5 and ½-14 NPT)	**D12**	✓	✓	✓
Capri cable gland 4F CrNi and clamping device (848699 + 810634) included	**D59**	✓	✓	✓
TAG plate empty (no inscription)	**D61**	✓	✓	✓

Selection and Ordering data	Order code	HART	PA	FF
Further designs Add "**-Z**" to Article No. and specify Order code.				
Use in or on zone 1D/2D[2] (only together with type of protection "Intrinsic safety" (transmitter 7MF4...-.....-.B.. Ex ia)"and IP66)	**E01**	✓	✓	✓
Dual seal	**E24**	✓	✓	✓
Explosion-proof "Intrinsic safety" to NEPSI (China) (only for transmitter 7MF4...-.....-.B..)	**E55**[3]	✓	✓	✓
Ex prot. "Explosion-proof" to NEPSI (China) (only for transmitter 7MF4...-.....-.D..)	**E56**[3]	✓	✓	✓
Explosion-proof "Zone 2" to NEPSI (China) (only for transmitter 7MF4...-.....-.E..)	**E57**[3]	✓	✓	✓
Ex protection „Ex ia", „Ex d" and „Zone 2" to NEPSI (China) (only for transmitter 7MF4...-.....-.R..)	**E58**[3]	✓	✓	✓
"Intrinsic safety" and "Explosion-proof" explosion protection acc. to Kosha (Korea) (pending) (only for transmitter 7MF4...-.....-.[B, D]..-Z + E11)	**E70**[3]	✓	✓	✓
Ex-protection Ex ia according to EAC Ex (Russia)	**E80**	✓	✓	✓
Ex-protection Ex d according to EAC Ex (Russia)	**E81**	✓	✓	✓
Ex-protection Ex nA/ic (Zone 2) according to EAC Ex (Russia)	**E82**	✓	✓	✓
Ex-protection Ex ia + Ex d + Zone 1D/2D according to EAC Ex (Russia)	**E83**	✓	✓	✓
Two coats of lacquer on enclosure and cover (PU on epoxy)	**G10**	✓	✓	✓
Interchanging of process connection side	**H01**	✓	✓	✓
Vent on side for gas measurements	**H02**	✓	✓	✓
Stainless steel process flanges for vertical differential pressure lines	**H03**	✓	✓	✓
Transient protector 6 kV (lightning protection)	**J01**	✓	✓	✓
Chambered graphite gasket for process flange	**J02**	✓	✓	✓
Chambered PTFE graphite gasket	**J03**	✓	✓	✓
EPDM O-rings for process flange with approval (WRC/WRAS)	**J05**	✓	✓	✓
Vent valve or blanking plug of process flange welded-in (orientation: on right when viewing the display)[4]	**J08**	✓	✓	✓
Vent valve or blanking plug of process flange welded-in (orientation: on left when viewing the display)[4]	**J09**	✓	✓	✓
Marine approvals				
• Det Norske Veritas Germanischer Lloyd (DNV-GL)	**S10**	✓	✓	✓
• Lloyds Register (LR)	**S11**	✓	✓	✓
• French marine classification society Bureau Veritas (BV)	**S12**	✓	✓	✓
• American Bureau of Shipping (ABS)	**S14**	✓	✓	✓
• Russian Maritime Register (RMR)	**S16**	✓	✓	✓
• Korean Register of Shipping (KR)	**S17**	✓	✓	✓

Factor valve block mounting for SITRANS P410 is possible. Depending on the available P410 variants, please see the configuration options for SITRANS P DS III (page 1/253).

1) Device plug Han IP65
2) Option does not contain gas explosion protection; only dust explosion protection: Use in or at Zone 1D/2D.
3) When the additional ex option is selected, the ATEX marking on the device is omitted. Only the Ex option selected via the Z option is marked.
4) Blanking plug is standard configuration. Order option A40 if a vent valve is required instead of a blanking plug.

© Siemens 2020

Selection and Ordering data	Order code			
Additional data		**HART**	**PA**	**FF**
Please add "**-Z**" to Article No. and specify Order code(s) and plain text.				
Measuring range to be set Specify in plain text:				
• in the case of linear characteristic curve (max. 5 characters): Y01: ... up to ... mbar, bar, kPa, MPa, psi	**Y01**	✓	✓[1)]	
• in the case of square rooted characteristic (max. 5 characters): Y02: ... up to ... mbar, bar, kPa, MPa, psi	**Y02**	✓		
Stainless steel tag plate and entry in device variable (measuring point description) Max. 16 characters, specify in plain text: Y15:	**Y15**	✓	✓	✓
Measuring point text (entry in device variable) Max. 27 char., specify in plain text: Y16:	**Y16**	✓	✓	✓
Entry of HART address (TAG) Max. 8 char., specify in plain text: Y17:	**Y17**	✓		
Setting of pressure indication in pressure units Specify in plain text (standard setting: bar): Y21: mbar, bar, kPa, MPa, psi, ... Note: The following pressure units can be selected: bar, mbar, mm H_2O*), inH_2O*), ftH_2O*), mmHG, inHG, psi, Pa, kPa, MPa, g/cm^2, kg/cm^2, Torr, ATM or % *) ref. temperature 20 °C	**Y21**	✓	✓	✓
Setting of pressure indication in non-pressure units[2)] Specify in plain text: Y22: ..... up to ..... l/min, m^3/h, m, USgpm, ... (specification of measuring range in pressure units "Y01" or "Y02" is essential, unit with max. 5 characters)	**Y22 + Y01** *or* **Y02**	✓		
Preset bus address possible between 1 and 126 Specify in plain text: Y25:	**Y25**		✓	✓
Damping adjustment in seconds (0 ... 100 s)	**Y30**	✓	✓	✓

Only Y01, Y15, Y16, Y17, Y21, Y22, Y25 and D05 can be factory preset.

✓ = available

1) Measuring accuracies for PROFIBUS PA transmitters with Option Y01 are calculated in the same way as for HART devices.
2) Preset values can only be changed over SIMATIC PDM.

© Siemens 2020

Dimensional drawings

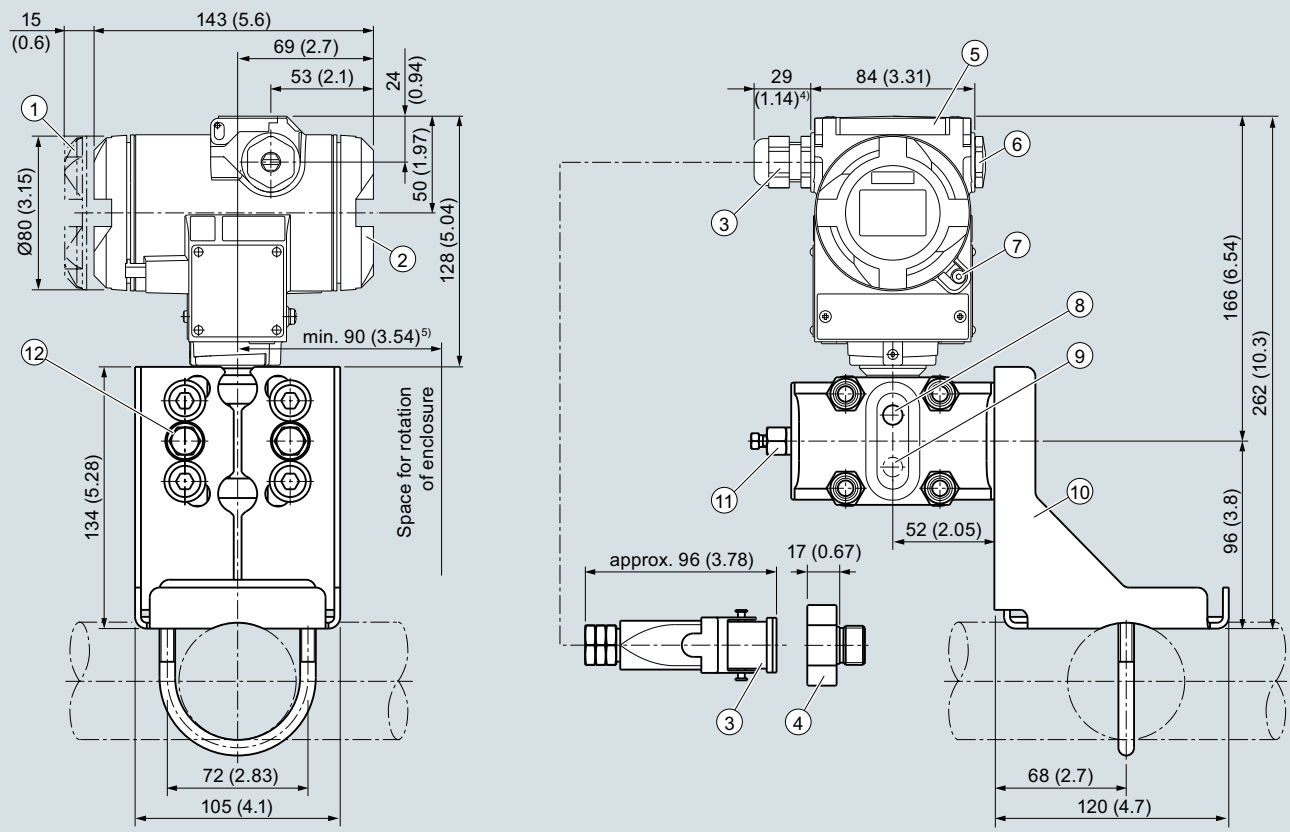

1. Electronics side, local display (longer overall length for cover with inspection window)[1]
2. Connection side[1]
3. Electrical connection:
   - Pg 13.5 screw gland (adapter)[2] [3]
   - M20 x 1,5 screw gland
   - ½-14 NPT screw gland
   - Han 7D/Han 8D[2] [3] device plug
4. Harting adapter
5. Cover over buttons
6. Blanking plug
7. Safety catch (only for "flameproof enclosure" type of protection; not shown in the drawing)
8. Lateral ventilation for liquid measurement (Standard)
9. Lateral ventilation for gas measurement (order option H02)
10. Mounting bracket (optional)
11. Sealing plug with valve (optional)
12. Process connection: ¼-18 NPT (IEC 61518)

1) In addition, allow approx. 20 mm (0.79 inch) for the thread length
2) Not with "flameproof enclosure" type of protection
3) Not for type of protection "FM + CSA" [is + XP]"
4) For Pg 13.5 with adapter, approx. 45 mm (1.77 inch)
5) 92 mm (3.62 inch) minimum distance for rotating with indicator

SITRANS P410 pressure transmitters for differential pressure and flow, dimensions in mm (inch)

© Siemens 2020

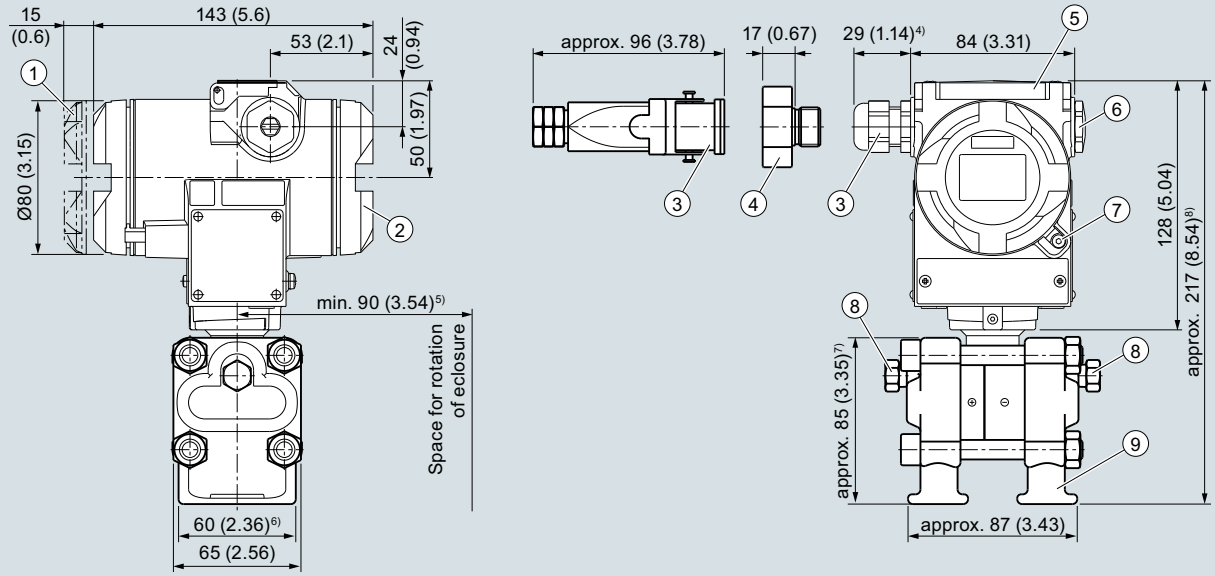

1. Electronics side, local display
   (longer overall length for cover with inspection window)[1]
2. Connection side[1]
3. Electrical connection:
   - Pg 13.5 screw gland (adapter)[2] [3]
   - M20 x 1,5 screw gland
   - ½-14 NPT screw gland
   - Han 7D/Han 8D[2] [3] device plug
4. Harting adapter
5. Cover over buttons
6. Blanking plug
7. Safety catch (only for "flameproof enclosure" type of protection; not shown in the drawing)
8. Sealing plug with valve (optional)
9. Process connection: ¼-18 NPT (IEC 61518)

1) In addition, allow approx. 20 mm (0.79 inch) for the thread length
2) Not with "flameproof enclosure" type of protection
3) Not for type of protection "FM + CSA" [is + XP]"
4) For Pg 13.5 with adapter, approx. 45 mm (1.77 inch)
5) 92 mm (3.62 inch) minimum distance for rotating with indicator
6) 74 mm (2.9 inch) for PN ≥ 420 (MAWP ≥ 6092 psi)
7) 91 mm (3.6 inch) for PN ≥ 420 (MAWP ≥ 6092 psi)
8) 219 mm (8.6 inch) for PN ≥ 420 (MAWP ≥ 6092 psi)

SITRANS P410 pressure transmitters for differential pressure and flow, with process covers for vertical differential pressure lines, optional "H03" , dimensional drawing, dimensions in mm (inch)

SITRANS P410 pressure transmitters for differential pressure and flow, with process covers for vertical differential pressure lines

© Siemens 2020

Selection and Ordering data	Article No.
Accessories/Spare parts	
Mounting bracket and fastening parts for pressure transmitters SITRANS P410 with HART, P410 with PROFIBUS PA and P410 with FOUNDATION Fieldbus (7MF403.-.....-..C.)	
• made of steel	**7MF4997-1AB**
• made of stainless steel 304/1.4301	**7MF4997-1AH**
• made of stainless steel 316L/1.4404	**7MF4997-1AP**
Mounting bracket and fastening parts for pressure transmitters SITRANS P410 with HART, P410 with PROFIBUS PA and P10with FOUNDATION Fieldbus (7MF403-.....-..A., -..B., ..D. and ..F.)	
• made of steel	**7MF4997-1AC**
• made of stainless steel 304/1.4301	**7MF4997-1AJ**
• made of stainless steel 316L/1.4404	**7MF4997-1AQ**
Mounting and fastening brackets For differential pressure transmitters with flange thread M10 SITRANS P410 with HART, P410 with PROFIBUS PA and P410 with FOUNDATION Fieldbus (7MF443.-...)	
• made of steel	**7MF4997-1AD**
• made of stainless steel 304/1.4301	**7MF4997-1AK**
• made of stainless steel 316L/1.4404	**7MF4997-1AR**
Mounting and fastening brackets For differential pressure transmitters with flange thread M12 SITRANS P410 with HART, P410 with PROFIBUS PA and P410 with FOUNDATION Fieldbus (7MF453.-...)	
• made of steel	**7MF4997-1AE**
• made of stainless steel 304/1.4301	**7MF4997-1AL**
• made of stainless steel 316L/1.4404	**7MF4997-1AS**
Mounting and fastening brackets For differential pressure transmitters with flange thread 7/16 -20 UNF SITRANS P410 with HART, P410 with PROFIBUS PA and P410 with FOUNDATION Fieldbus (7MF443.-... and 7MF453.-...)	
• made of steel	**7MF4997-1AF**
• made of stainless steel 304/1.4301	**7MF4997-1AM**
• made of stainless steel 316L/1.4404	**7MF4997-1AT**
Cover Made of die-cast aluminum, including gasket, for SITRANS P410 with HART, P410 with PROFIBUS PA and P410 with FOUNDATION Fieldbus. Compatible for Ex and non-Ex transmitters	
• without window	**7MF4997-1BB**
• with window	**7MF4997-1BE**
Cover Made of stainless steel, including gasket, or SITRANS P410 with HART, P410 with PROFIBUS PA and P410 with FOUNDATION Fieldbus. Compatible for Ex and non-Ex transmitters	
• without window	**7MF4997-1BC**
• with window	**7MF4997-1BF**
Digital indicator Including mounting material, for SITRANS P410 with HART, P410 with PROFIBUS PA and P410 with FOUNDATION Fieldbus	**7MF4997-1BR**
Measuring point label	
• without inscription (5 units)	**7MF4997-1CA**
• Printed (1 unit) Data according to Y01 or Y02, Y15, Y16 and Y99 (see "Pressure transmitters")	**7MF4997-1CB-Z** **Y..: .....**

Selection and Ordering data	Article No.
Mounting screws	
For measuring point label, grounding and connection terminals or for display (50 units)	**7MF4997-1CD**
Sealing screws (1 set = 2 units) for process flange	
• made of stainless steel	**7MF4997-1CG**
• made of Hastelloy	**7MF4997-1CH**
Sealing screws with vent valve Complete (1 set = 2 units)	
• made of stainless steel	**7MF4997-1CP**
• made of Hastelloy	**7MF4997-1CQ**
Connection board	
• for SITRANS P410	**7MF4997-1DN**
• for SITRANS P410 with PROFIBUS PA and P410 with FOUNDATION Fieldbus	**7MF4997-1DP**
O-rings for process flanges made of:	
• FPM (Viton)	**7MF4997-2DA**
• PTFE (Teflon)	**7MF4997-2DB**
• FEP (with silicone core, approved for food)	**7MF4997-2DC**
• FFPM (Kalrez)	**7MF4997-2DD**
• NBR (Buna N)	**7MF4997-2DE**
Sealing ring for process connection	**see "Fittings"**

© Siemens 2020

Selection and Ordering data	Article No.
Documentation	
The entire documentation is available for download free-of-charge in various languages at: http://www.siemens.com/processinstrumentation/documentation	
Compact operating instructions SITRANS P DS III/P410	
• English, German, Spanish, French, Italian, Dutch	**A5E03434626**
Certificates (order only via SAP) instead of Internet download	
• hard copy (to order)	**A5E03252406**
• on DVD (to order)	**A5E03252407**
HART modem	
with USB interface	**7MF4997-1DB**

Power supply units see Chap. 7 "Supplementary Components".

© Siemens 2020

Dimensional drawings

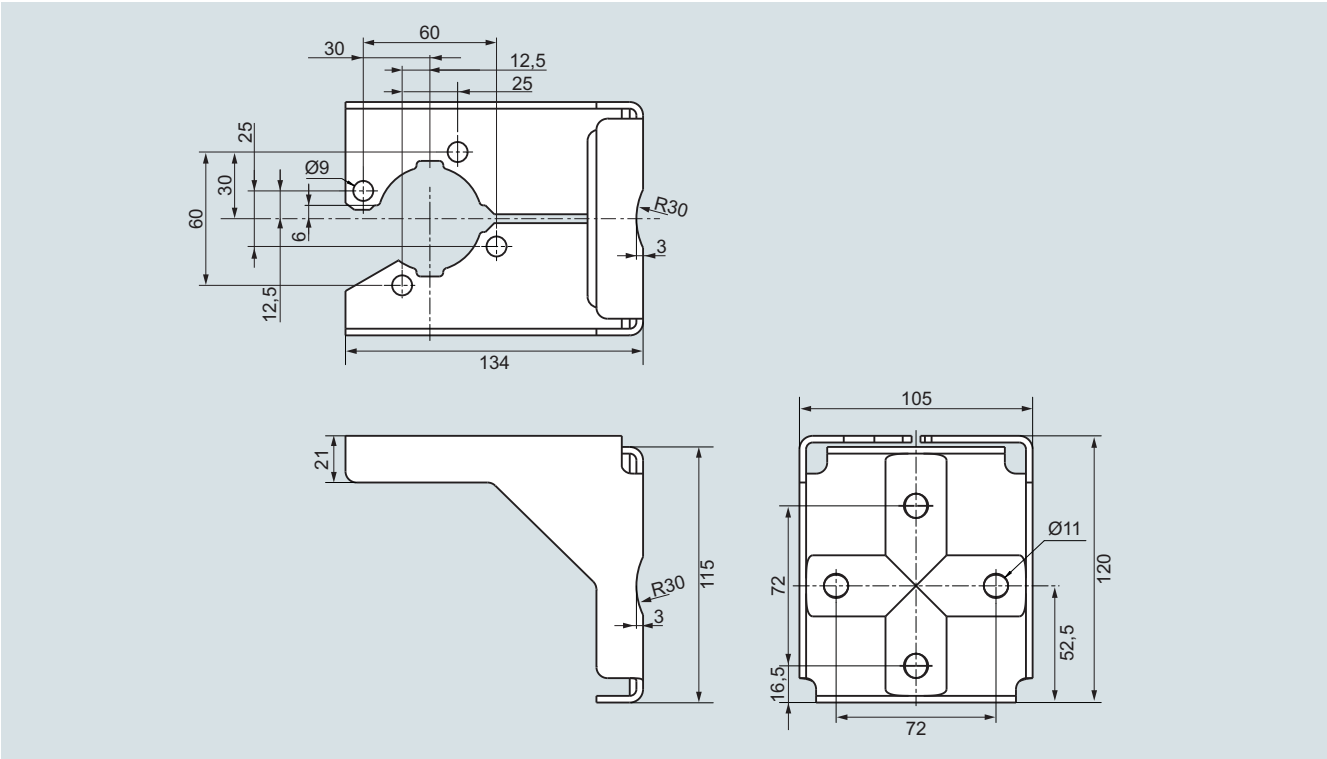

Mounting bracket for SITRANS P410 gauge pressure-transmitters, dimensions in mm
mounting bracket material: Sheet-steel Mat. No. 1.0330, chrome-plated, or stainless steel Mat. No. 1.4301 (304)

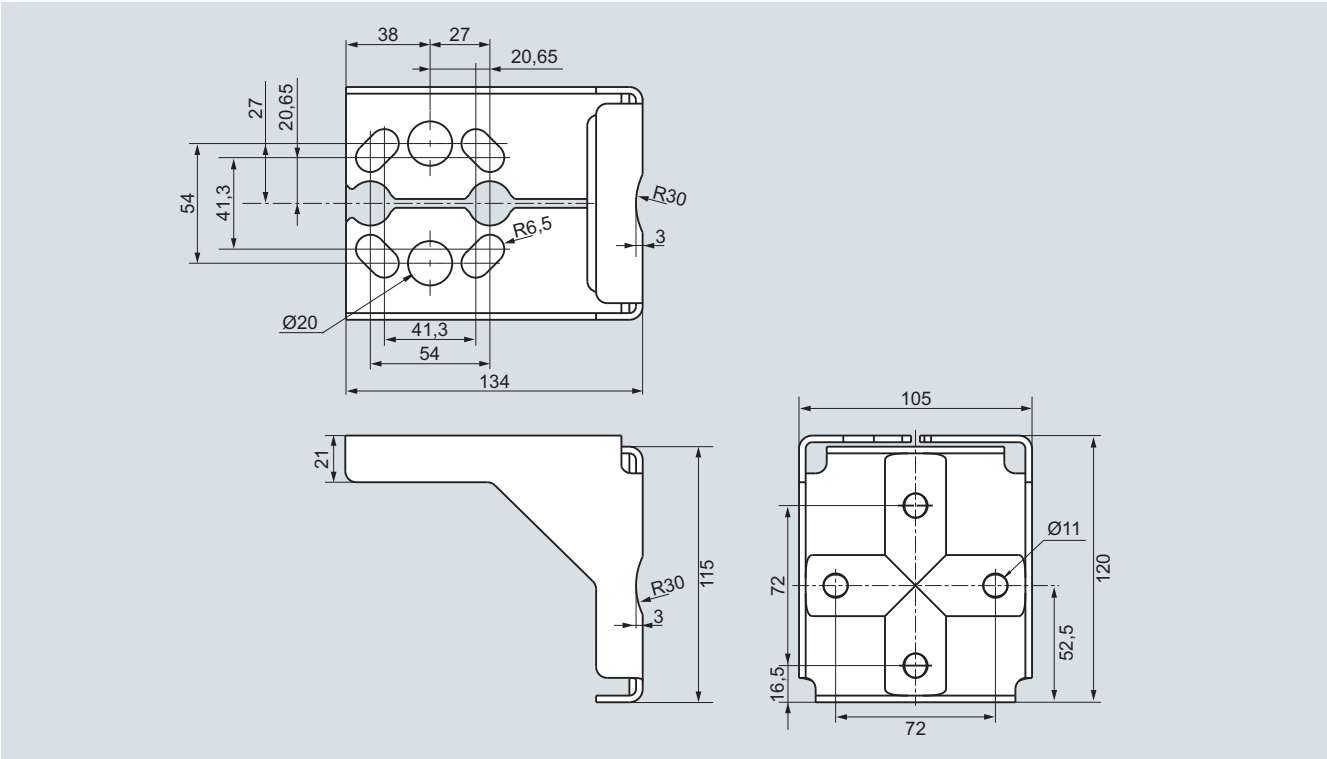

Mounting bracket for SITRANS P410 differential pressure transmitter, dimensions in mm
mounting bracket material: Sheet-steel Mat. No. 1.0330, chrome-plated, or stainless steel Mat. No. 1.4301 (304)

© Siemens 2020

Overview

SITRANS P500 pressure transmitters are digital pressure transmitters featuring extensive user-friendliness and which fulfil the most stringent demands of accuracy, long-term stability, speed and lots more.

Extensive functionality allows you to set the pressure transmitter specifically to your own requirements. Despite their many settings options, local set-up is easy. A multi-lingual menu with clear text instructions guides you through the process. There are also help texts available.

The innovative EDD with integrated QuickStart assistance is also quick and easy to configure by computer using the HART protocol.

Extensive diagnostic functions, e.g. min/max pointer for pressure and temperature, or limit value indicator, make sure you always have the process under control. You can also display additional process values such as temperature or static pressure. The simultaneous display of mass, resulting from a volume, is also easy.

The SITRANS P500 pressure transmitters can be configured to measure:

- Differential pressure
- Level
- Volume
- Mass
- Volume flow
- Mass flow

Benefits

- High measuring accuracy
- Very fast response time
- Extremely good long-term stability
- High reliability even under extreme chemical and mechanical loads
- For aggressive and non-aggressive gases, vapors and liquids
- Extensive diagnosis and simulation functions which can be used both on site as well as via HART.
- Optional separate replacement of measuring cell and electronics without recalibration.
- Extremely low conformity error values
- Infinitely adjustable measuring spans of 1 mbar to 32 bar (0.0145 to 465 psi; 0.4 to 12860 inH_2O)
- Extremely good total performance and conformity error values with no loss of performance up to a turndown of 10 guaranteed.
- Additional integrated sensor for static pressure
- Parameterization via on-site control keys or HART
- Short process flanges nable space-saving installation.

Application

The SITRANS P500 pressure transmitters can be used in industrial areas with extreme chemical and mechanical loads. Electromagnetic compatibility in the range 10 kHz to 1 GHz makes them suitable for locations with high electromagnetic emissions.

Pressure transmitters with ratings "Intrinsic safety" and "Explosion-proof" may be installed within potentially explosive atmospheres (zone 1) or in zone 0. The pressure transmitter comes with a CE-declaration of conformity and fulfils the corresponding unified European directives (ATEX).

Pressure transmitters with the type of protection "Intrinsic safety" for use in zone 0 may be operated with power supply units of category "ia" and "ib".

With newly designed measuring cell, it is possible to work with temperature of mediums of -40 to 125 °C (-40 to +257 °F)) without having to use a remote seal.

The transmitters can be equipped with various designs of remote seals for special applications such as the measurement of highly viscous fluids.

The pressure transmitter can be fully parameterized locally via the three operating keys and externally via HART.

© Siemens 2020

Technical description

Pressure transmitters for differential pressure and flow

- Measured variables:
  - Differential pressure
  - Small positive or negative pressure
  - Flow q ~ √Δp (together with a primary element (see Chapter "Flow Meters"))
- Measuring span (freely adjustable) for SITRANS P500: 1 mbar to 32 bar (0.0145 to 465 psi; 0.4 to 12860 inH_2O)

Pressure transmitters for level

- Measured variable: Level of aggressive and non-aggressive liquids in open and closed vessels.
- Measuring span (freely adjustable) for SITRANS P500: 1.25 to 6250 mbar (0.5 to 2509 inH_2O)
- Nominal diameter of the mounting flange
  - DN 50 / PN 40
  - DN 80 / PN 40
  - DN 100/ PN 16, PN 40
  - 2 inch/class 150, class 300
  - 3 inch/class 150, class 300
  - 4 inch/ class 150, class 300
  - customized special version

In the case of level measurements in open vessels, the low-pressure connection of the measuring cell remains open (measurement "compared to atmospheric").

In the case of measurements in closed vessels, the lower-pressure connection has to be connected to the vessel in order to compensate the static pressure.

The wetted parts are made from a variety of materials, depending on the degree of corrosion resistance required.

Design

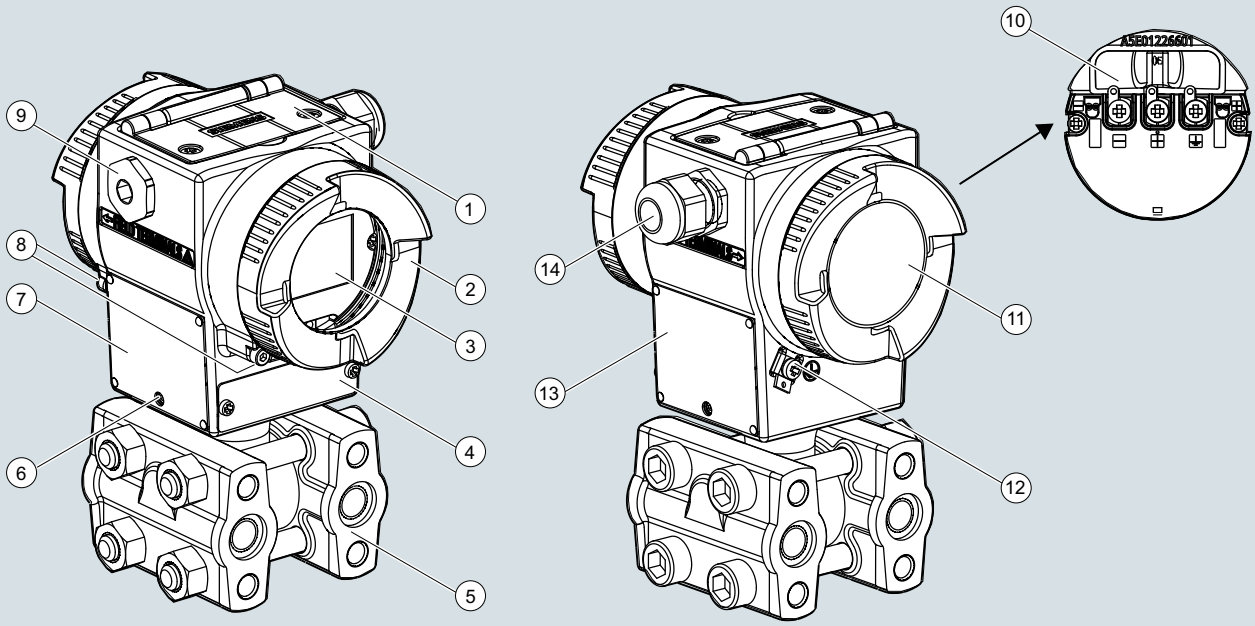

1. Cover over buttons
2. Cover, optionally with inspection window
3. Local display (optional)
4. Tag plate
5. Process flange with process connection
6. Retaining screws (on two sides) for the measuring cell
7. Approval label
8. Safety catch
9. Blanking plug
10. Electrical terminal compartment
11. Cover for electrical terminal compartment
12. Protective conductor connector
13. Nameplate
14. Cable inlet, optionally with cable gland or plug-in connection

View of transmitter

- The electronics enclosure is made of coated die-cast aluminum.
- The enclosure has round screwed covers front and back.
- Depending on the design the front cover is fitted with an inspection window. You can read off the measured value directly from the optional display through the window.
- The inlet to the terminal compartment is located either on the left or right side. The unused opening in each case is sealed by a blanking plug.
- The PE/ground terminal is on the back of the enclosure.
- Access to the terminal compartment for auxiliary power and shielding by unscrewing the cover.
- Beneath the electronic enclosure is the measuring cell with its process flanges at which the process connections are available. The modular design of the pressure transmitter lets you replace the measuring cell, electronics and connection board as required.
- On the top of the enclosure you can see the screwed cover of the three local pushbuttons of the transmitter.

© Siemens 2020

Function

Operation of electronics with HART communication

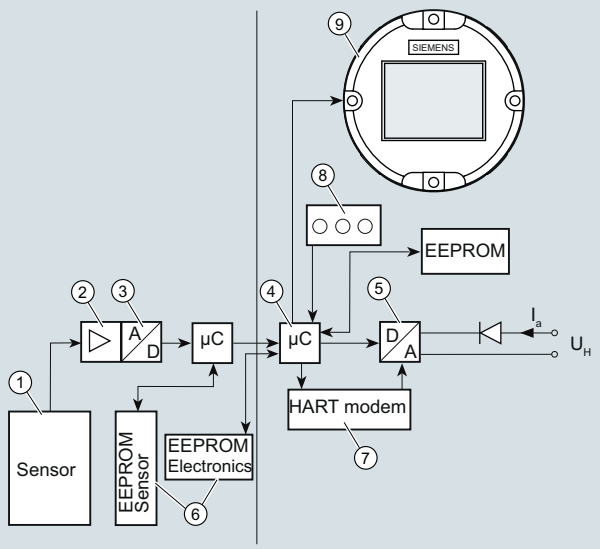

1 Sensor of the measuring cell
2 Measuring amplifier
3 Analog-to-digital converter
4 Microcontroller
5 Digital-to-analog converter
6 One EEPROM each in the measuring cell and in the electronics
7 HART modem
8 Keys (local operation)
9 Digital display
I_A Output current
U_H Auxiliary power

Function diagram of electronics

- The input pressure is converted into an electrical signal by the sensor.
- This signal is amplified by the measuring amplifier and digitalized in an analog-to-digital converter.
- The digital signal is analyzed in a microcontroller and corrected according to linearity and thermal characteristics.
- In a digital-to-analog converter it is then converted into the output current of 4 to 20 mA. When connected to supply lines, a diode circuit provides reverse polarity protection.
- The measuring cell-specific data, the electronic data and the parameterization data is held in two EEPROMs. One EEPROM is incorporated into the measuring cell electronics, the other is incorporated into the application electronics.

Operation

- The three local pushbuttons enable you both to navigate and carry out configuration and to visually track messages and process values, provided a display is available.
- If you have a device without a display, you can carry out zero adjustment using the three local pushbuttons. It is possible to retrofit a display at any time.
- You can also carry out settings by computer via a HART modem.

Mode of operation of the measuring cells

Measuring cell for differential pressure and flow

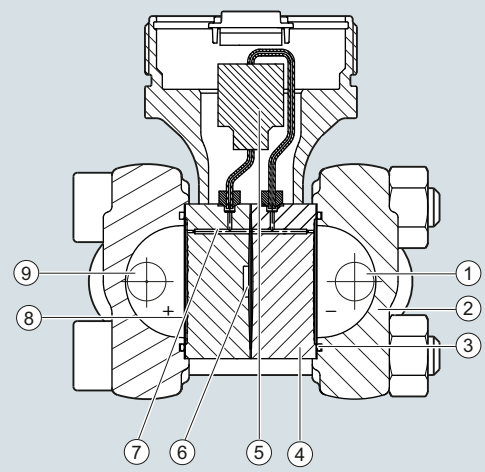

1 Input pressure P-
2 Process flange with process connection
3 O-Ring
4 Measuring cell body
5 Silicon pressure sensor
6 Overload diaphragm
7 Filling liquid
8 Seal diaphragm
9 Input pressure P+

Measuring cell for differential pressure and flow, function diagram

- The differential pressure is transmitted via the seal diaphragm and the filling liquid to the silicon pressure sensor.
- If the measuring limits are exceeded, the overload diaphragm flexes until the seal diaphragm touches the body of the measuring cell. This protects the sensor module from overload.
- The differential pressure causes the measuring diaphragm of the silicon pressure sensor to flex.
- The displacement changes the resistance value of the 4 piezo resistors in the measuring diaphragm in a bridge circuit.
- The change in the resistance causes a bridge output voltage proportional to the input pressure.

© Siemens 2020

Measuring cell for level

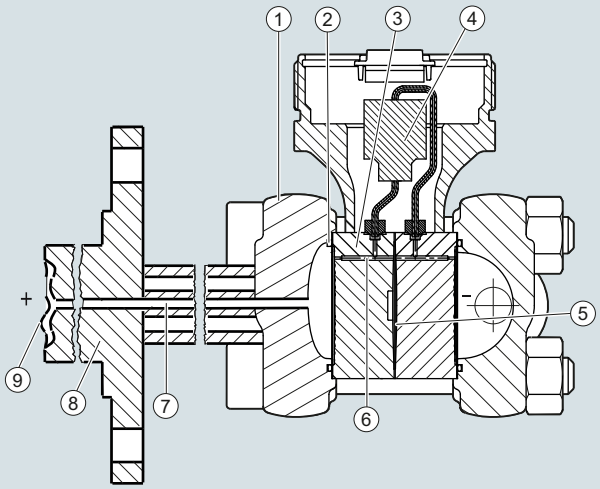

1 Process flange with process connection
2 O-Ring
3 Measuring cell body
4 Silicon pressure sensor
5 Overload diaphragm
6 Filling liquid of the measuring cell
7 Capillary tube with filling liquid of the mounting flange
8 Flange with optional tube
9 Seal diaphragm for mounting flange

Measuring cell for level, function diagram

- The input pressure (hydrostatic pressure) acts hydraulically on the measuring cell via the seal diaphragm on the mounting flange.
- The differential pressure applied to the measuring cell is transmitted via the seal diaphragm and the filling liquid to the silicon pressure sensor.
- If the measuring limits are exceeded, the overload diaphragm flexes until the seal diaphragm touches the body of the measuring cell. This protects the sensor module from overload.
- The differential pressure causes the measuring diaphragm of the silicon pressure sensor to flex.
- The displacement changes the resistance value of the 4 piezo resistors in the measuring diaphragm in a bridge circuit.
- The change in the resistance causes a differential pressure proportional to the input pressure.

Configuration of SITRANS P500 HART

Depending on the version, there are a range of options for configuring the pressure transmitter and for setting or reading the parameters.

Configuration using the pushbuttons (local operation)

You can configure the transmitter in situ using the three keys provided a display is available. If you have no display, you can only carry out zero adjustment.

It is possible to retrofit a display. See accessories.

Configuration using HART

Parameterization using HART is carried out using a HART Communicator or a PC in conjunction with a HART modem.

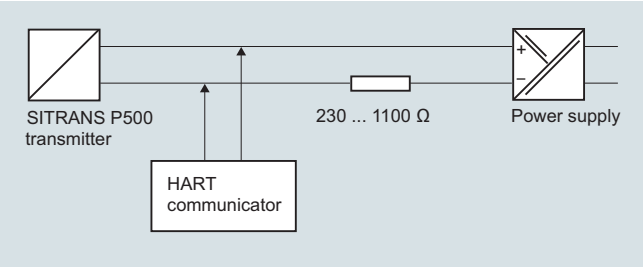

Communication between a HART Communicator and a pressure transmitter

When parameterizing with the HART Communicator, the connection is made directly to the 2-wire cable.

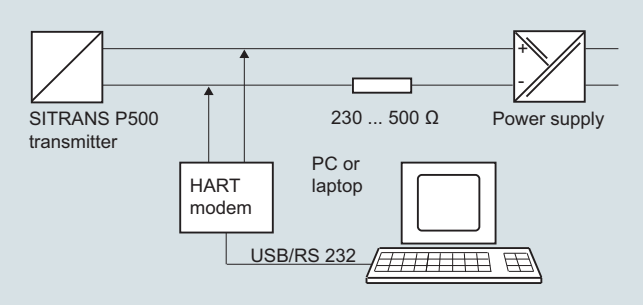

HART communication between a PC communicator and a pressure transmitter

For configuring via PC a HART modem is used which connects the transmitter to the PC.

The signals needed for communication in conformity with the HART 6.0 protocols are superimposed on the output current using the Frequency Shift Keying (FSK) method.

The necessary device files are available for download on the Internet.

SITRANS P500 configuration options

The transmission offers you full configuring options both via HART as well as in situ provided the optional display is available.

For simple parameterizing we also offer the easy to understand QuickStart function with guided commissioning.

SITRANS P500 diagnostic functions

- Maintenance timer
- Min/Max pointer (both resetable and non-resetable)
  - Pressure (incl. time and temperature stamp)
  - Static pressure (incl. time and temperature stamp)
  - Sensor temperature (incl. time stamp)
  - Electronic temperature (incl. time stamp)
- Limit monitor block
- Diagnostic warning
- Diagnostic alarm
- Simulation functions
- Display of trends and histograms
- Operating hours meter

© Siemens 2020

Physical dimensions available for the SITRANS P500 HART display

Physical variable	Physical dimensions
Pressure (setting can also be made in the factory)	Pa, MPa, kPa, bar, mbar, torr, atm, psi, g/cm^2, kg/cm^2, mmH_2O (4 °C), inH_2O (4 °C), inH_2O (20 °C), mmH_2O, mmH_2O (4 °C), ftH_2O (20 °C), inHg, mmHg, hPA
Level	m, cm, mm, ft, in
Volume	m^3, dm^3, hl, yd^3, ft^3, in^3, gallon, Imp. gallon, bushel, barrel, barrel liquid, l; Norm (standard) l; Norm (standard) m^3, Norm (standard) feet^3
Mass	g, kg, t (metric), lb, Ston, Lton, oz
Volume flow	m^3/d, m^3/h, m^3/s, l/min, l/s, ft^3/d, ft^3/min, ft^3/s, US gallon/min, gallon/s, l/h, milL/d, gallon/d, gallon/h, milgallon/d, Imp.gallon/s, Imp.gallon/m, Imp.gallon/h, Imp.gallon/d, Norm (standard) m^3/h, Norm (standard) l/h, Norm (standard) ft^3/h, Norm (standard) ft^3/m, barrel liquid/s, barrel liquid/m, barrel liquid/h
Mass flow	t/d, t/h, t/min, kg/d, kg/h, kg/min, kg/s, g/h, g/min, g/s, lb/d, lb/min, lb/s, LTon/d, LTon/h, STon/d, STon/h, STon/min
Temperature	K, °C, °F, °R
Miscellaneous	%, mA

© Siemens 2020

Technical specifications

Input		
Measured variable	Differential pressure and flow	
Measuring span (infinitely adjustable)	Measuring span (min. ... max.)	Maximum operating pressure (static pressure)
	1.00 ... 50 mbar (0.4 ... 20 inH_2O) 1.25 ... 250 mbar (0.5 ... 100 inH_2O) 6.25 ... 1250 mbar (2.5 ... 502 inH_2O) 31.25 ... 6250 mbar (12.54 ... 2509 inH_2O) 0.16 ... 32 bar (2.33 ... 465 psi)	160 bar (2320 psi)
Lower range limit		
• Measuring cell with silicone oil filling	-100 % of max. measuring span and/or 30 mbar a (0.44 psi a)	
Upper range limit	100 % of max. measuring span	
Lower range value	Between measuring limits (freely adjustable)	

Output	
Output current signal	4 ... 20 mA
• Lower current limit (freely adjustable)	3.55 mA, factory setting 3.8 mA
• Upper current limit (freely adjustable)	23 mA, factory setting 20.5 mA
• Ripple (without HART communication)	I_{pp} ≤ 0.4 % of max. output current
• adjustable damping	0... 100 s in steps of 0.1 s, factory-seting: 2 s
• current transmitter	3.55 ... 23 mA
• Failure signal	adjustable within limits:: • Bottom: 3.55 … 3.7 mA (default value: 3.6 mA) • Top: 21.0 … 23 mA (default value: 22.8 mA)
Load	
• Without HART communication	$R_B \leq (U_H - 10.5\ V)/0.023\ A$ in Ω, U_H : Power supply in V
• With HART communication	
- HART Communicator	R_B = 230 ... 1100 Ω
- HART modem	R_B = 230 ... 500 Ω
Characteristic curve	Linearly rising, linearly falling, square rooted characteristic rising, bidirectional square rooted characteristic and user-specific

Measuring accuracy		
Reference conditions (in accordance with IEC 60770-1) All error information always refers to the set measuring span.	• Rising characteristic curve • Lower range value 0 bar • Stainless steel seal diaphragm • Measuring cell with silicone oil filling • Room temperature (25 °C (77 °F))	
Error in measurement at limit setting incl. hysteresis and reproducibility r: measuring span ratio (r: measuring span ratio (r = max. measuring span / set span))		
Linear characteristic	r ≤ 10	r ≥ 10
• 50 mbar (20 inH_2O)	≤ 0.06 %	≤ (0.006 · r) %
• 250 mbar (100 inH_2O) 1250 mbar (502 inH_2O) 6250 mbar (2509 inH_2O) 32 bar (465 psi)	≤ 0.03 %	≤ (0.003 · r) %
Square-rooted characteristic		
• Flow > 50 %	r ≤ 10	r ≥ 10
- 50 mbar (20 inH_2O)	≤ 0.06 %	≤ (0.006· r) %
- 250 mbar (100 inH_2O) 1250 mbar (502 inH_2O) 6250 mbar (2509 inH_2O) 32 bar (465 psi)	≤ 0.03 %	≤ (0.003 · r) %
• Flow 25 % … 50 %	r ≤ 10	r ≥ 10
- 50 mbar (20 inH_2O)	≤ 0.12 %	≤ (0.012 · r) %
- 250 mbar (100 inH_2O) 1250 mbar (502 inH_2O) 6250 mbar (2509 inH_2O) 32 bar (465 psi)	≤ 0.06 %	≤ (0.006 · r) %
Influence of ambient temperature per 28 °C (50 °F)		
• 50 mbar (20 inH_2O)	≤ (0.04 · r + 0.05) %	
• 250 mbar (100 inH_2O)	≤ (0.025 · r + 0.014) %	
• 1250 mbar (502 inH_2O) 6250 mbar (2509 inH_2O) 32 bar (465 psi)	≤ (0.006 · r + 0.03) %	
Influence of static pressure		
• At the lower range value (PKN)		
- 50 mbar (20 inH_2O)	≤ (0.1 · r) % per 70 bar (1015 psi) correction via zero point correction	
- 250 mbar (100 inH_2O)	≤ (0.035 · r) % per 70 bar (1015 psi) correction via zero point correction	
- 1250 mbar (502 inH_2O) 6250 mbar (2509 inH_2O) 32 bar (465 psi)	≤ (0.007 · r) % per 70 bar (1015 psi) correction via zero point correction	
• On the measuring span (PKS)		
- 50 mbar (20 inH_2O)	≤ 0.13 % per 70 bar (1015 psi)	
- 250 mbar (100 inH_2O) 1250 mbar (502 inH_2O)	≤ 0.03 % per 70 bar (1015 psi)	
- 6250 mbar (2509 inH_2O)	≤ 0.09 % per 70 bar (1015 psi)	
- 32 bar (465 psi)	≤ 0.05 % per 70 bar (1015 psi)	

© Siemens 2020

Total Performance[1)]		
• Linear characteristic	r ≤ 5	5 < r ≤ 10
- 50 mbar (20 inH_2O)	≤ 0.27 %	≤ 0.46 %
- 250 mbar (100 inH_2O)	≤ 0.14 %	≤ 0.27 %
- 1250 mbar (502 inH_2O) 6250 mbar (2509 inH_2O) 32 bar (465 psi)	≤ 0.09 %	≤ 0.14 %
Square rooted characteristic		
• Flow > 50 %	r ≤ 5	5 < r ≤ 10
- 50 mbar (20 inH_2O)	≤ 0.27 %	≤ 0.46 %
- 250 mbar (100 inH_2O)	≤ 0.14 %	≤ 0.27 %
- 1250 mbar (502 inH_2O) 6250 mbar (2509 inH_2O) 32 bar (465 psi)	≤ 0.09 %	≤ 0.14 %
• Flow 25 % … 50 %	r ≤ 5	5 < r ≤ 10
- 50 mbar (20 inH_2O)	≤ 0.54 %	≤ 0.92 %
- 250 mbar (100 inH_2O)	≤ 0.28 %	≤ 0.54 %
- 1250 mbar (502 inH_2O) 6250 mbar (2509 inH_2O) 32 bar (465 psi)	≤ 0.18 %	≤ 0.28 %
Step response time T_{63} without electrical damping		
• 50 mbar (20 inH_2O)	≤ 140 ms, contains a dead time of ≤ 45 ms	
• 250 mbar (100 inH_2O) 1250 mbar (502 inH_2O) 6250 mbar (2509 inH_2O) 32 bar (465 psi)	≤ 88 ms, contains a dead time of ≤ 45 ms	
Long-term stability	≤ (0.05 · r) % per 5 years ≤ (0.08 · r) % per 10 years	
Influence of power supply	≤ 0.005 %/1 V	
Operating conditions		
Mounting position	Any	
Ambient conditions		
• Ambient temperature (Note: Observe the temperature class in areas subject to explosion hazard.)		
- Total device	-40 ... +85 °C (-40 ... +185 °F)	
- Readable display	-20 ... +85 °C (-4 ... +185 °F)	
- Storage temperature	-50 ... +90 °C (-58 ... +194 °F)	
Climatic class		
• Condensation	Relative humidity 0 … 100 % (condensation permissible)	
Degree of protection (to IEC 60529)	IP66/IP 68 and NEMA 4X (with corresponding cable gland)	
Electromagnetic Compatibility		
• Emitted interference and interference immunity	Acc. to IEC 61326 and NAMUR NE 21	
Permissible pressures	According to 2014/68/EU pressure equipment directive	
Temperature of medium		
• Measuring cell with silicone oil filling	-40 ... +125 °C (-40 ... +257 °F)	

Design	
Weight (without options)	Approx. 3.3 kg (7.3 lb)
Material of parts in contact with the medium	
• Seal diaphragm	Stainless steel, mat. no. 1.4404/316L, Hastelloy C276, Monel 400
• Process connection and sealing screw	PN 160: stainless steel, mat.-No. 1.4404/316L
• Sealing material in the process connections	
- O-Ring	• Standard: Viton (FKM (FPM)) • Optional: NBR, PTFE (virginal), PTFE (glass fiber-reinforced), FFPM (Kalrez)[2)], Graphite
Material of parts not in contact with media	
Die-cast aluminum enclosure	• Low copper die-cast aluminum AC-AlSi12 (Fe) or AC-AlSi 10 Mg (Fe) to DIN EN 1706 • Lacquer on polyurethane base, optional epoxy-based primer • Stainless steel name plates (mat. no. 1.4404/316L)
Stainless steel precision cast enclosure	Stainless steel, mat. no. 1.4404/316L
Process connection screws	Stainless steel, mat. no. 1.4404/316L
Mounting bracket	Steel or stainless steel mat. no. 1.4301
Measuring cell filling	Silicone oil
Process connection	¼-18 NPT female thread and flange connection with M10 to DIN 19213 or 7/16-20 UNF mounting thread to IEC 61518/DIN EN 61518
Electrical connection	• Screw terminals • Cable entry via the following screwed glands: - M20 x 1.5 - ½-14 NPT - Device plug Han 7D/Han 8D - Device plug M12
Displays and controls	
Pushbuttons	3 for local programming directly on transmitter
Display	• With or without integrated display • Cover with or without window
Auxiliary power supply	
Terminal voltage on transmitter	• DC 10.6 ... 44 V • With intrinsically-safe operation DC 10.6 ... 30 V

© Siemens 2020

Certificates and approvals	
Classification according to PED 2014/68/EU	
• PN 160 (MAWP 2320 psi)	For gases of fluid group 1 and liquids of fluid group 1; complies with requirements of article 4, paragraph 3 (sound engineering practice)
Explosion protection	
Explosion protection for Europe (to ATEX)	
• Intrinsic safety "i"	PTB 09 ATEX 2004 X
- Marking	Ex II 1/2 G Ex ia/ib IIC T4
- Permissible ambient temperature	-40 ... +85 °C (-40 ... +185 °F)
- Connection	To certified intrinsically-safe circuits with peak values: U_i = 30 V, I_i = 100 mA, P_i = 750 mW; R_i = 300 Ω
- Effective internal inductance:	L_i = 400 µH
- Effective inner capacitance:	C_i = 6 nF
• Explosion-proof "d"	BVS 09 ATEX E 027
- Marking	Ex II 1/2 G Ex db ia IIC T4/T6 Ga/Gb
- Permissible ambient temperature	-40 ... +85 °C (-40 ... +185 °F) temperature class T4; -40 ... +60 °C (-40 ... +140 °F) temperature class T6
- Connection	To circuits with values: U_m = DC 10.5 ... 45 V
• Dust explosion protection for zone 20	BVS 09 ATEX E 027
- Marking	Ex II 1 D Ex ta ia IIIC T120°C Da
- Permissible ambient temperature	-40 ... +85 °C (-40 ... +185 °F)
- Max. surface temperature	120 °C (248 °F)
- Connection	To certified intrinsically-safe circuits with peak values: U_i = 30 V, I_i = 100 mA, P_i = 750 mW, R_i = 300 Ω
- Effective internal inductance:	L_i = 400 µH
- Effective inner capacitance:	C_i = 6 nF
• Dust explosion protection for zone 21/22	BVS 09 ATEX E 027
- Marking	Ex II 2D Ex tb ia IIIC T120°C Db
- Connection	To circuits with values: U_m = 10.5 ... 45 V DC; P_{max} = 1.2 W
• Type of protection "n" (zone 2)	PTB 09 ATEX 2004 X
- Marking	Ex II 3 G Ex nA II T4/T6 Ex II 2/3 G Ex ib/nL IIC T4/T6 Ex II 2/3 G Ex ib/ic IIC T4/T6
- "nA" connection	U_m = 45 V DC
- "nL, ic" connection	U_i = 45 V
- Effective internal inductance:	L_i = 400 µH
- Effective inner capacitance:	C_i = 6 nF

Explosion protection for USA (to FM)	
Certificate of Compliance	No. 3033013
• Identification (XP/DIP) or (IS)	XP CL I, DIV 1, GP ABCDEFG T4 / T6 DIP CL II, III, DIV1, GP EFG T4/T6 IS CL I, II, III, DIV1, GP ABCDEFG T4 CL I, Zone 0, AEx ia IIC T4 CL I, Zone 1, AEx ib IIC T4
- Permissible Ambient Temperature	T_a = T4: -40 ... +85 °C (-40 ... +185 °F) T_a = T6: -40 ... +60 °C (-40 ... +140 °F)
- Entity parameters	According to "control drawing": A5E02189134N U_m = 30 V, I_m = 100 mA, P_i = 750 mW, L_i = 400µH , Ci = 6 nF
• Marking (NI/NO)	NI CL I, DIV 2, GP ABCD T4/T6 NI CL I, Zone 2, GP IIC T4/T6 S CL II, III, GPFG T4/T6 NI CL I, DIV 2, GP ABCD T4/T6, NIFW NI CL I, Zone 2, GP IIC T4/T6, NIFW NI CLII, III, DIV 2, GP FG T4/T6, NIFW
- Permissible Ambient Temperature	T_a = T4: -40 ... +85 °C (-40 ... +185 °F) T_a = T6: -40 ... +60 °C (-40 ... +140 °F)
- (NI/S) parameters	According to "control drawing": A5E02189134N U_m = 45 V, L_i = 400 µH, C_i = 6 nF,
Explosion protection for Canada (to $_{C}CSA_{US}$)	
Certificate of Compliance	No. 2280963
• Marking (XP/DIP)	CL I, DIV 1, GP ABCD T4 /T6; CL II, DIV 1, GP EFG T4/T6
- Permissible ambient temperature	T_a = T4: -40 ... +85 °C (-40 ... +185 °F) T_a = T6: -40 ... +60 °C (-40 ... +140 °F)
- Entity parameters	According to "control drawing": A5E02189134N U_m = 45 V
• Marking (ia/ib)	CL I, Ex ia/Ex ib IIC, T4 CL II, III, Ex ia/Ex ib, GP EFG, T4 CL I, AEx ia/AEx ib IIC, T4 CL II, III, AEx ia/ AEx ib, GP EFG, T4
- Permissible ambient temperature	T_a = T4: -40 ... +85 °C (-40 ... +185 °F)
- Entity parameters	U_i = 30 V, I_i = 100 mA, P_i = 750 mW, R_i = 300 Ω , L_i = 400 µH, C_i = 6 nF
• Marking (NI/n)	CL I, DIV 2, GP ABCD T4/T6 CL II, III, DIV 2, GP FG T4/T6 Ex nA IIC T4/T6 AEx nA IIC T4/T6 Ex nL IIC T4/T6 AEx nL IIC T4/T6
- Permissible ambient temperature	T_a = T4: -40 ... +85 °C (-40 ... +185 °F) T_a = T6: -40 ... +60 °C (-40 ... +140 °F)
- NI/nA parameters	According to "control drawing": A5E02189134N U_m = 45 V
- nL parameters	According to "control drawing": A5E02189134N U_i = 45 V, I_i = 100 mA, L_i = 400 µH, C_i = 6 nF

© Siemens 2020

Explosion protection for China (acc. to NEPSI)	
• Intrinsic safety "i"	GYJ111111X
- Marking	Ex ia/ib IIB/IIC T4
- Perm. ambient temperature	40 ... +85 °C (-40 ... +185 °F)
- Connection	To certified intrinsically-safe circuits with maximum values: U_i = 30 V I_i = 100 mA, P_i = 750 mW
- Effective internal inductance	L_i = 400 mH
- Effective inner capacitance	C_i = 6 nF
• Explosion-proof "d"	GYJ111112
- Marking	Ex dia IIC T4/T6
- Permissible ambient temperature	-40 ... +85 °C (-40 ... +185 °F) temperature class T4; -40 ... +60 °C (-40 ... +140 °F) temperature class T6
- Connection	To circuits with values: U_m = DC 10.5 ... 45 V
• Dust explosion protection for zone 21/22	GYJ111112
- Marking	DIP A21 TA,T120 °C IP68 D21
- Connection	To circuits with values: U_m = DC 10.5 ... 45 V
• Type of protection "n" (zone 2)	GYJ111111X
- Marking	Ex nL IIB/IIC T4/T6 Ex nA II T4/T6
- Connection	U_i = 45 V DC
- Effective internal inductance	L_i = 400 mH
- Effective inner capacitance	C_i = 6 nF

1) The total performance includes the errors caused by temperature effects, static pressure effects and conformity error, including hysteresis and repeatability.
2) Not in combination wiht measuring span "G".

HART communication	
Load with connection of	
• HART communicator	R_B = 230 ... 1100 Ω
• HART modem	R_B = 230 ... 500 Ω
Cable	2 wire shielded: ≤ 3.0 km (1.86 miles), multiwire shielded: ≤ 1.5 km (0.93 miles)
Protocol	HART Version 6.0
PC/laptop requirements	IBM compatible, RAM > 32 MByte, hard disk > 70 MByte, depending on modem type: RS 232-interface or USB connection, VGA graphics
Software for computer	SIMATIC PDM 6.0

© Siemens 2020

Selection and Ordering data

Article No.

Pressure transmitters for differential pressure and flow, SITRANS P500 HART, PN 160 (MAWP 2320 psi) ↗ 7MF54 ■■ - ■■■■ 0

↗ Click on the Article No. for the online configuration in the PIA Life Cycle Portal.

Enclosure	**Thread for cable gland[1)]**	
Die-cast aluminum, dual chamber enclosure	M20x1.5	0
Die-cast aluminum, dual chamber enclosure	½-14 NPT	1
Stainless steel precision casting, dual chamber enclosure	M20x1.5	2
Stainless steel precision casting, dual chamber enclosure	½-14 NPT	3
Output		
4 ... 20 mA, HART		3
Measuring cell filling	**Measuring cell cleaning**	
Silicone oil	normal	1
Measuring span		
1.00 ... 50 mbar	(0.4 ... 20 inH_2O)	C
1.25 ... 250 mbar	(0.5 ... 100.4 inH_2O)	D
6.25 ... 1250 mbar	(2.5 ... 502 inH_2O)	E
31.25 ... 6250 mbar	(12.54 ... 2509 inH_2O)	F
0.16 ... 32 bar	(2.33 ... 465 psi)	G
Wetted parts materials		
Seal diaphragm	Process flange	
Stainless steel 1.4404/316L	Stainless steel 1.4404/316L	A
Hastelloy C276[2)]	Stainless steel 1.4404/316L	B
Monel 400[2)]	Stainless steel 1.4404/316L	C
Hastelloy	Hastelloy	R
Process connection		
Female thread ¼-18 NPT		
• Sealing screw opposite process connection		
- Mounting thread 7/16 - 20 UNF according to IEC 61518/DIN EN 61518		0
- Mounting thread M10 to DIN 19213		1
• Vent on side of process flange[3)]		
- Mounting thread 7/16 - 20 UNF according to IEC 61518/DIN EN 61518		4
- Mounting thread M10 to DIN 19213		5

[1)] Cable glands must be ordered separately from "Further designs" (add "-Z" to Article No. and specify order code).
[2)] Not together with Measuring span "C".
[2)] Not in conjunction with remote seals (option V00).

© Siemens 2020

Selection and Ordering data	Order code
Further designs Add "**-Z**" to Article No. and specify Order code.	
Attachments	
Mounting bracket made of steel	**A01**
Mounting bracket made of stainless steel 304	**A02**
Mounting bracket made of stainless steel 316L	**A03**
Display (Standard: no display, cover closed)	
With display and blanking cover	**A10**
With display and glass cover	**A11**
Special enclosure / cover version	
Two coats of lacquer on enclosure, cover (PU on epoxy)	**A20**
Electrical connection and cable entry (Standard: no cable gland, only dust protection caps)	
Cable gland made of plastic (IP66/68)[4]	**A50**
Cable glands made of metal (IP66/68)	**A51**
Cable glands made of stainless steel (IP66/68)	**A52**
Device plug M12 without cable socket (IP66/67)[4]	**A60**
Device plug M12 complete with cable socket (IP66/67)[4]	**A61**
Device plug Han 7D, plastic, straight (with cable socket) (IP65)[4]	**A71**
Device plug Han 7D, plastic, angled (with cable socket) (IP65)[4]	**A72**
Device plug Han 7D, metal enclosure, straight (with cable socket) (IP65)[4]	**A73**
Device plug Han 7D, metal enclosure, angled (with cable socket) (IP65)[4]	**A74**
Device plug Han 8D, plastic, straight (with cable socket) (IP65)[4][7]	**A75**
Device plug Han 8D, plastic, angled (with cable socket) (IP65)[4][7]	**A76**
Device plug Han 8D, metal enclosure, straight (with cable socket) (IP65)[4][7]	**A77**
Device plug Han 8D, metal enclosure, angled (with cable socket) (IP65)[4][7]	**A78**
PG 13.5 adapters[4]	**A82**
Language for labels, quick-start guide, menu language default [9] (instead of English as standard)	
German	**B10**
French	**B12**
Spanish	**B13**
Italian	**B14**
Chinese	**B15**
Russian	**B16**
Japanese	**B17**
English with units psi/inH_2O/°F	**B21**
Special version: Supplementary menu languages (Standard: English, German, French, Spanish, Italian)	
Asia language package (in addition: Chinese, Japanese, Russian)	**B80**
Certificates (available online for downloading)[1]	
Quality test certificate, 5-point factory calibration (IEC 60770-2)[2]	**C11**
Inspection certificate according to EN 10204-3.1[3]	**C12**
Inspection certificate (EN 10204-3.1); PMI test of parts in contact with medium	**C15**
Functional Safety (SIL2) Devices suitable for use according to IEC 61508 and IEC 61511. Includes SIL conformity declaration	**C20**

Selection and Ordering data	Order code
Further designs Add "**-Z**" to Article No. and specify Order code.	
Degree of protection approvals: Ex ia/ib (intrinsic safety)	
Ex ia/ib protection (ATEX) (T4)	**E00**
Ex IS protection (FM) (T4)	**E01**
Ex IS protection ($_C$CSA$_{US}$) (T4)	**E02**
Ex ia/ib protection (NEPSI) (T4)	**E06**
Degree of protection approvals: Ex d (flameproof)	
Ex d explosion-proof (ATEX)(T4/T6)	**E20**
Ex XP explosion-proof and DIP (FM)(T4/T6)	**E21**
Ex XP explosion-proof and DIP ($_C$CSA$_{US}$)(T4/T6)	**E22**
Ex d explosion-proof (NEPSI)(T4/T6)	**E26**
Degree of protection approvals: n/NI	
Zone 2 (nA, nL, ic) (ATEX) (T4/T6)	**E40**
Div2 NI, Div2 NI-field wiring (FM) (T4/T6)	**E41**
Zone 2 (nA, nL), Div2 NI ($_C$CSA$_{US}$) (T4/T6)	**E42**
Zone 2 (nA, nL) (NEPSI) (T4/T6)	**E46**
Degree of protection approvals: Dust Zone 20/21/22	
Use in Zone 21/22 (Ex tD) (ATEX) Ex tb	**E60**
Use in Zone 20/21/22 (Ex iaD) (ATEX) Ex ta	**E61**
Use in Zone 21/22 (Ex DIP) (NEPSI)	**E66**
Degree of protection approvals: Combinations	
IS protection and XP and DIP (FM)	**E71**
IS protection and XP and DIP ($_C$CSA$_{US}$)	**E72**
IS protection and XP and DIP (FM/$_C$CSA$_{US}$)	**E73**
Supplementary approvals/degree of protection	
Ex-protection Ex ia according to EAC Ex (Russia)	**E80**
Ex-protection Ex d according to EAC Ex (Russia)	**E81**
Dual Seal approval[5]	**E85**
Export approval Korea	**E86**
Special process connection versions (diff. pressure)	
Side vents for gas measurements[9]	**L32**
Swap process connection: high-pressure side at front	**L33**
Mosquito protection	
4 pcs. for ¼-18 NPT thread	**L36**
Process flanges, O-rings, special material **Standard: Viton (FKM (FPM)**	
Process connection sealing rings made of FFPM (Kalrez)[10]	**L62**
Process connection sealing rings made of NBR	**L63**
Process connection sealing rings made of graphite	**L64**
Drain/Vent valve (1 set = 2 units)	
2 ventilation valves ¼- 18 NPT, in material of process flanges)	**L80**
Remote seals	
Transmitters with connection of remote seal[6] (For premounted valve manifolds see page 1/321)	**V00**

1) Enclosed in print or as DVD: see page 1/319.
2) When also ordering the quality test certificate (factory calibration) according to IEC 60770-2 for transmitters with mounted diaphragm seals: Order this certificate only together with the remote seals. The measuring accuracy of the total combination is certified here.
3) When also ordering the inspection certificate according to EN 10204-3.1 for transmitters with mounted diaphragm seals: Order this certificate as well in addition to the respective remote seals.
4) Not together with types of protection "Explosion-proof", "Ex nA" and "Intrinsic safety and explosion-proof"
5) Only in conjunction with FM and/or $_C$CSA$_{US}$
6) Please select a remote seal separately. Also refer to the information under footnote 2). Remote seals see page 1/401.
7) The device plug Han 8D is identical with the former Han 8U version.
8) For option B15, B16 and B17 the menu language default is english. Otherwise the Option B80 (Asia language package) is necessary.
9) Only in conjunction with process connection "Vent on side".
10) Not together with measuring span "G".

© Siemens 2020

Selection and Ordering data	Order code
Additional data Please add "**-Z**" to Article No. and specify Order code(s) and plain text.	
Measuring range to be set	
Specify in plain text:	
• In the case of linear characteristic curve (max. 5 characters): Y01: ... up to ... mbar, bar, kPa, MPa, psi	**Y01**
• In the case of square rooted characteristic (max. 5 characters): Y02: ... up to ... mbar, bar, kPa, MPa, psi	**Y02**
Measuring point number and measuring point identifier (only standard ASCII character set)	
Specify in plain text:	
Measuring point number (TAG No.), max. 16 characters Y15:	**Y15**
Measuring point text (max. 27 char.) Y16:	**Y16**
Entry of HART address (TAG), max. 32 characters Y17:	**Y17**
Setting of pressure indication in pressure units	**Y21**
Specify in plain text (standard setting: mbar) Y21: bar, kPa, MPa, psi, ...	
Note: The following pressure units are selectable: bar, mbar, mm H_2O*), in H_2O*), ftH_2O*), mmHG, inHG, psi, Pa, kPa, MPa, g/cm^2, kg/cm^2, Torr, ATM, % or mA	
*) Reference temperature 20 °C	
Setting of pressure indication in non-pressure units[1)] Specify in plain text:	**Y22 +** **Y01 or Y02**
Y22: ... up to ... l/min, m^3/h, m, USgpm, ... (specification of measuring range in pressure units "Y01" is essential, unit with max. 5 characters)	
Customer-specific settings	
Damping setting (range: 0 ... 100 s) (Standard setting: 2 s)	**Y30**

[1)] Preset values can only be changed over SIMATIC PDM.

© Siemens 2020

Dimensional drawings

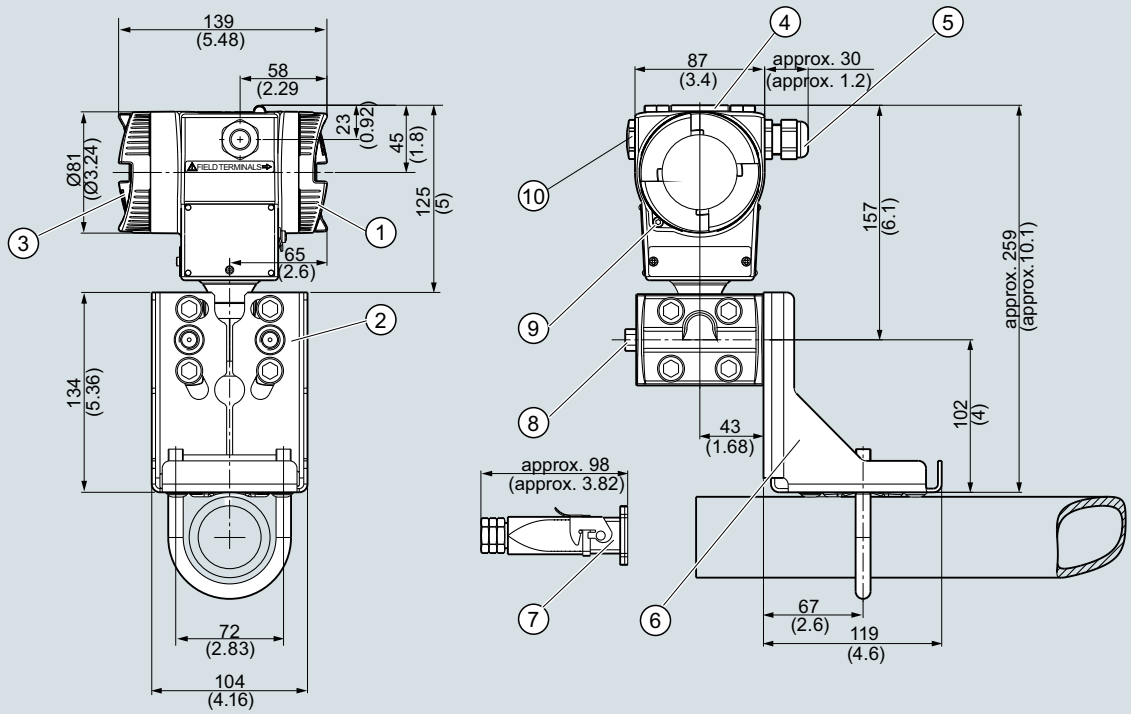

1. Connection side[1)]
2. Process connection: ¼-18 NPT (IEC 61518)
3. Electronics side, local display[1)]
4. Cover over buttons
5. Electrical connection:
   - M20 x 1,5 or ½-14 NPT screw gland
   - Han 7D/Han 8D[2) 3)] or M12[3)] device plug
6. Mounting bracket (optional)
7. Electrical connection:
   - Han 7D/Han 8D device plug[2) 3)]
8. Process connection, with valve (optional) or screwed joint (optional)
9. Screw lid - safety bracket
10. Screw-type blank cap

1) In addition, allow approx. 20 mm (0.79 inch) for the thread length
2) Not with "flameproof enclosure" type of protection
3) Not with type of protection "FM + CSA" [is + XP]"

SITRANS P pressure transmitter for differential pressure and flow, P500 series, measurements in mm (inch)

© Siemens 2020

Technical specifications

Input		
Measured variable	Level	
Measuring span (infinitely adjustable)	Measuring span (min. ... max.)	Maximum operating pressure
	1.25 ... 250 mbar (0.5 … 100 inH_2O)	See "Mounting flange"
	6.25 ... 1250 mbar (2.5 ... 500 inH_2O)	
	31.25 ... 6250 mbar (12.54 ... 2509 inH_2O)	
Lower range limit		
• Measuring cell with silicone oil filling	-100 % of max. measuring span or 500 mbar a (7.25 psi a) vacuum resistance Also available as vacuum-resistant remote seal: 30 mbar a (0.44 psi a)	
Upper range limit	100% of max. measuring span	
Lower range value	Between measuring limits (freely adjustable)	
Output		
Output current signal	4 ... 20 mA	
• Lower current limit (freely adjustable)	3.55 mA, factory setting 3.8 mA	
• Upper current limit (freely adjustable)	23 mA, factory setting 20.5 mA	
• Ripple (without HART communication)	$I_{pp} \leq 0.4$ of max. output current	
• adjustable damping	0... 100 s in steps of 0.1 s, factory setting 2 s	
• current transmitter	3.55 ... 23 mA	
• Failure signal	Adjustable within limits: • Lower: 3.55 … 3.7 mA (factory setting 3.6 mA) • Upper: 21.0 … 23 mA (factory setting 22.8 mA)	
Load		
• Without HART communication	$R_B \leq (U_H - 10.5\ V)/0.023\ A$ in Ω, U_H : Power supply in V	
• With HART communication		
- HART Communicator	R_B = 230 ... 1100 Ω	
- HART modem	R_B = 230 ... 500 Ω	
Characteristic curve	Linearly rising or linearly falling and user-specific	
Measuring accuracy		
Reference conditions (in accordance with IEC 60770-1) All error information always refers to the set measuring span.	• Rising characteristic curve • Lower range value 0 bar • Stainless steel seal diaphragm • Measuring cell with silicone oil filling • Room temperature (25 °C (77 °F))	
Error in measurement at limit setting incl. hysteresis and reproducibility r: measuring span ratio (r = max. measuring span / set measuring span)		
Linear characteristic	r ≤ 10	r ≥ 10
• 250 mbar (100 inH_2O) 1250 mbar (502 inH_2O) 6250 mbar (2509 inH_2O)	≤ 0.03 %	≤ (0.003 · r) %

Long-term stability	≤ (0.05 · r) % per 5 years ≤ (0.08 · r) % per 10 years
Influence of ambient temperature per 28 °C (50 °F)[1]	
• 250 mbar (100 inH_2O)	≤ (0.025 · r + 0.014) %
• 1250 mbar (502 inH_2O) 6250 mbar (2509 inH_2O)	≤ (0.006 · r + 0.03) %
Influence of static pressure	
• At the lower range value (PKN)[1) 2)]	
- 250 mbar (100 inH_2O)	≤ (0.035 · r) % je 70 bar (1015 psi) correction via zero point correction
- 1250 mbar (502 inH_2O) 6250 mbar (2509 inH_2O)	≤ (0.007 · r) % je 70 bar (1015 psi) correction via zero point correction
• On the measuring span (PKS)[1)]	
- 250 mbar (100 inH_2O) 1250 mbar (502 inH_2O)	≤ 0.03 % je 70 bar (1015 psi)
- 6250 mbar (2509 inH_2O)	≤ 0.09 % je 70 bar (1015 psi)
Influence of power supply	≤ 0.005 %/1 V
Operating conditions	
Mounting position	Defined by flange
Ambient conditions	
• Ambient temperature (Note: Observe the temperature class in areas subject to explosion hazard.)	
- total device	-40 ... +85 °C (-40 ... +185 °F)
- Readable display	-20 ... +85 °C (-4 ... +185 °F)
- Storage temperature	-50 ... +90 °C (-58 ... +194 °F)
Climatic class	
• Condensation	Relative humidity 0 … 100 % (condensation permissible)
Degree of protection to IEC 60529	IP66/IP68 and NEMA 4X (with corresponding cable gland)
Electromagnetic Compatibility	
• Emitted interference and interference immunity	Acc. to IEC 61326 and NAMUR NE 21
Permissible pressures	According to 2014/68/EU pressure equipment directive
Medium temperature of high-pressure side	
• Measuring cell with silicone oil filling	
- $p_{abs} \geq 1$ bar	-40 ... +175[3)] °C (-40 ... +347[3)] °F)
- $p_{abs} < 1$ bar	-40 ... +80 °C (-40 ... +176 °F)
Design	
Weight	
• To EN (pressure transmitter with mounting flange, without tube)	approx. 9.8 … 11.8 kg (21.6… 26.0 (lb)
• To ASME (pressure transmitter with mounting flange, without tube)	approx. 9.8 … 16.8 kg (21.6 … 37.0 lb)

© Siemens 2020

Material of wetted parts at the high-pressure side	
• Seal diaphragm of mounting flange	Stainless steel 1.4404/316L, Hastelloy C276, mat. no. 2.4819, Monel 400, mat. no. 2.4360, Tantal, PFA auf Edelstahl 1.4404/316L, PTFE auf Edelstahl 1.4404/316L
• Sealing surface	Smooth to EN 1092-1, Form B1 and/or ASME B16.5 RF 125 … 250 AA for stainless steel316L, EN 1092-1 Form B2 and/or ASME B16.5 RFSF in the case of other materials
• Sealing material in the process connection	
- O-Ring	• Standard: Viton (FKM (FPM)) • Optional: NBR, PTFE (virginal), PTFE (glas fiber-reinforced), FFPM (Kalrez), Graphite
- For vacuum application of mounting flange	Copper
Material of wetted parts at the low-pressure side	
• Seal diaphragm	Stainless steel, mat. no. 1.4404/316L, Hastelloy C276, Monel 400
• Process connection and sealing screw	• Stainless steel, mat. no. 1.4404/316L
• Sealing material in the process connection	
- O-Ring	• Standard: Viton (FKM (FPM)) • Optional: NBR, PTFE (virginal), PTFE (glas fiber-reinforced), FFPM (Kalrez), Graphite
Material of parts not in contact with media	
Die-cast aluminum enclosure	• Low copper die-cast aluminum AC-AlSi12 (Fe) or AC-AlSi 10 Mg (Fe) to DIN EN 1706 • Lacquer on polyurethane base, optional epoxy-based primer • Stainless steel serial plate
Stainless steel precision cast enclosure	Stainless steel, mat. no. 1.4404/316L
Process connection screws	Stainless steel
Measuring cell filling	Silicone oil
• Liquid mounting flange	Silicone oil or other material
Process connection	
• High-pressure side	Flange to EN and ASME
• Low-pressure side	¼-18 NPT female thread and flange connection with M10 to DIN 19213 or 7/16-20 UNF mounting thread to IEC 61518/DIN EN 61518
Electrical connection	• Screw terminals • Cable entry via the following screwed glands: - M20 x 1.5 - ½-14 NPT - Device plug Han 7D/Han 8D - Device plug M12
Displays and controls	
Push buttons	3; for operation directly on the device
Display	• With or without integrated display • Cover with or without window

Auxiliary power supply	
Terminal voltage on transmitter	• DC 10.6 ... 44 V • With intrinsically-safe operation DC 10.6 ... 30 V
Certificates and approvals	
Classification according to PED 2014/68/EU	
• PN 160 (MAWP 2320 psi)	For gases of fluid group 1 and liquids of fluid group 1; complies with requirements of article 4, paragraph 3 (sound engineering practice)
Explosion protection	
Explosion protection for Europe (to ATEX)	
• Intrinsic safety "i"	PTB 09 ATEX 2004 X
- Marking	Ex II 1/2 G Ex ia/ib IIC T4
- Permissible ambient temperature	-40 ... +85 °C (-40 ... +185 °F)
- Connection	To certified intrinsically-safe circuits with peak values: U_i = 30 V, I_i = 100 mA, P_i = 750 mW; R_i = 300 Ω
- Effective internal inductance:	L_i = 400 µH
- Effective inner capacitance:	C_i = 6 nF
• Explosion-proof "d"	BVS 09 ATEX E 027
- Marking	Ex II 1/2 G Ex db ia IIC T4/T6 Ga/Gb
- Permissible ambient temperature	-40 ... +85 °C (-40 ... +185 °F) temperature class T4; -40 ... +60 °C (-40 ... +140 °F) temperature class T6
- Connection	To circuits with values: U_m = DC 10.5 ... 45 V
• Dust explosion protection for zone 20	BVS 09 ATEX E 027
- Marking	Ex II 1 D Ex ta ia IIIC T120°C Da
- Permissible ambient temperature	-40 ... +85 °C (-40 ... +185 °F)
- Max. surface temperature	120 °C (248 °F)
- Connection	To certified intrinsically-safe circuits with peak values: U_i = 30 V, I_i = 100 mA, P_i = 750 mW, R_i = 300 Ω
- Effective internal inductance:	L_i = 400 µH
- Effective inner capacitance:	C_i = 6 nF
• Dust explosion protection for zone 21/22	BVS 09 ATEX E 027
- Marking	Ex II 2 D Ex tb ia IIIC T120°C Db
- Connection	To circuits with values: U_H = 10.5 ... 45 V DC; P_{max} = 1.2 W
• Type of protection "n" (zone 2)	PTB 09 ATEX 2004 X
- Marking	Ex II 3 G Ex nA II T4/T6 Ex II 2/3 G Ex ib/nL IIC T4/T6 Ex II 2/3 G Ex ib/ic IIC T4/T6
- "nA" connection	U_m = 45 V DC
- "nL, ic" connection	U_i = 45 V
- Effective internal inductance	L_i = 400 µH
- Effective inner capacitance	C_i = 6 nF

© Siemens 2020

Explosion protection for USA (to FM)	
Certificate of Compliance	No. 3033013
• Identification (XP/DIP) or (IS)	XP CL I, DIV 1, GP ABCDEFG T4 / T6 DIP CL II, III, DIV1, GP EFG T4/T6 IS CL I, II, III, DIV1, GP ABCDEFG T4 CL I, Zone 0, AEx ia IIC T4 CL I, Zone 1, AEX ib IIC T4
- Permissible Ambient Temperature	T_a = T4: -40 ... +85 °C (-40 ... +185 °F) T_a = T6: -40 ... +60 °C (-40 ... +140 °F)
- Entity parameters	According to "control drawing": A5E02189134N U_m = 30 V, I_m = 100 mA, P_i = 750 mW, L_i = 400 µH , C_i = 6 nF
• Marking (NI/NO)	NI CL I, DIV 2, GP ABCD T4/T6 NI CL I, Zone 2, GP IIC T4/T6 S CL II, III, GPFG T4/T6 NI CL I, DIV 2, GP ABCD T4/T6, NIFW NI CL I, Zone 2, GP IIC T4/T6, NIFW NI CLII, III, DIV 2, GP FG T4/T6, NIFW
- Permissible Ambient Temperature	T_a = T4: -40 ... +85 °C (-40 ... +185 °F) T_a = T6: -40 ... +60 °C (-40 ... +140 °F)
- (NI/S) parameters	According to "control drawing": A5E02189134N U_m = 45 V, L_i = 400 µH, Ci = 6 nF
Explosion protection for Canada (to $_C$CSA$_{US}$)	
Certificate of Compliance	No. 2280963
• Marking (XP/DIP)	CL I, DIV 1, GP ABCD T4 /T6; CL II, DIV 1, GP EFG T4/T6
- Permissible Ambient Temperature	T_a = T4: -40 ... +85 °C (-40 ... +185 °F) T_a = T6: -40 ... +60 °C (-40 ... +140 °F)
- Entity parameters	According to "control drawing": A5E02189134N, U_m = 45 V
• Marking (ia/ib)	CL I, Ex ia/Ex ib IIC, T4 CL II, III, Ex ia/Ex ib, GP EFG, T4 CL I, AEx ia/AEx ib IIC, T4 CL II, III, AEx ia/ AEx ib, GP EFG, T4
- Permissible Ambient Temperature	T_a = T4: -40 ... +85 °C (-40 ... +185 °F)
- Entity parameters	U_i = 30 V, I_i = 100 mA, P_i = 750 mW, R_i = 300 Ω , L_i = 400 µH, C_i = 6 nF
• Marking (NI/n)	CL I, DIV2, GP ABCD T4/T6 CL II, III, DIV2, GP FG T4/T6 Ex nA IIC T4/T6 AEx nA IIC T4/T6 Ex nL IIC T4/T6 AEx nL IIC T4/T6
- Permissible Ambient Temperature	T_a = T4: -40 ... +85 °C (-40 ... +185 °F) T_a = T6: -40 ... +60 °C (-40 ... +140 °F)
- NI/nA parameters	According to "control drawing": A5E02189134N, U_m = 45 V
- nL parameters	According to "control drawing": A5E02189134N, U_i = 45 V, I_i = 100 mA, L_i = 400 µH, C_i = 6 nF

Explosion protection for China (acc. to NEPSI)	
• Intrinsic safety "i"	GYJ111111X
- Marking	Ex ia/ib IIB/IIC T4
- Permissible ambient temperature	40 ... +85 °C (-40 ... +185 °F)
- Connection	To certified intrinsically-safe circuits with maximum values: U_i = 30 V I_i = 100 mA, P_i = 750 mW
- Effective internal inductance	L_i = 400 mH
- Effective inner capacitance	C_i = 6 nF
• Explosion-proof "d"	GYJ111112
- Marking	Ex dia IIC T4/T6
- Permissible ambient temperature	-40 ... +85 °C (-40 ... +185 °F) temperature class T4; -40 ... +60 °C (-40 ... +140 °F) temperature class T6
- Connection	To circuits with values: U_m = DC 10.5 ... 45 V
• Dust explosion protection for zone 21/22	GYJ111112
- Marking	DIP A21 TA,T120 °C IP68 D21
- Connection	To circuits with values: U_m = DC 10.5 ... 45 V
• Type of protection "n" (zone 2)	GYJ111111X
- Marking	Ex nL IIB/IIC T4/T6 Ex nA II T4/T6
- Connection	U_i = 45 V DC
- Effective internal inductance	L_i = 400 mH
- Effective inner capacitance	C_i = 6 nF

1) Only relevant for the pressure transmitter. The temperature error of the remote seal must calculated separately.
2) If the Type "D" measuring cell is used, the error should be increased by a factor of 5. This error can be reduced to 0 by a means of a zero adjustment.
3) This value may be increased if the process connection is sufficiently insulated.

HART communication	
Load with connection of	
• HART Communicator	R_B = 230 ... 1100 Ω
• HART modem	R_B = 230 ... 500 Ω
Cable	2 wire shielded: ≤ 3.0 km (1.86 miles), multiwire shielded: ≤ 1.5 km (0.93 miles)
Protocol	HART Version 6.0
PC/laptop requirements	IBM compatible, RAM > 32 MByte, hard disk > 70 MByte, depending on modem type: RS 232-interface or USB connection, VGA graphics
Software for computer	SIMATIC PDM 6.0

© Siemens 2020

Selection and Ordering data		Article No.	Order code
Pressure transmitters for level, SITRANS P500 HART		↗ 7MF56 ■■ - ■■■■ 0 - ■■■■	■■■
↗ Click on the Article No. for the online configuration in the PIA Life Cycle Portal.			
Enclosure	**Thread for cable gland[9)]**		
Die-cast aluminum, dual chamber enclosure	M20x1.5	0	
Die-cast aluminum, dual chamber enclosure	½-14 NPT	1	
Stainless steel precision casting, dual chamber enclosure	M20x1.5	2	
Stainless steel precision casting, dual chamber enclosure	½-14 NPT	3	
Output			
4 ... 20 mA, HART		3	
Measuring cell filling	**Measuring cell cleaning**		
Silicone oil	normal	1	
Measuring span (min. ... max.)			
1.25 ... 250 mbar	(0.5 ... 100 inH_2O)	D	
6.25 ... 1250 mbar	(2.5 ... 500 inH_2O)	E	
31.25 ... 6250 mbar	(12.54 ... 2509 inH_2O)	F	
Wetted parts of the low-pressure side (stainless steel process flanges)			
Seal diaphragm	Process connection		
Stainless steel 1.4404/316L	Stainless steel 1.4404/316L	A	
Hastelloy C276	Stainless steel 1.4404/316L	B	
Monel 400	Stainless steel 1.4404/316L	C	
Process connection of low-pressure side			
Female thread ¼-18 NPT			
• Sealing screw opposite process connection			
- Mounting thread 7/16 - 20 UNF according to IEC 61518/DIN EN 61518		0	
- Mounting thread M10 to DIN 19213		1	
• Vent on side of process flange			
- Mounting thread 7/16 - 20 UNF according to IEC 61518/DIN EN 61518		4	
- Mounting thread M10 to DIN 19213		5	
Wetted parts materials (high-pressure side)			
Stainless steel 1.4404/316L		0	
Hastelloy C276 mat. no. 2.4819		1	
Monel 400 mat. no. 2.4360		2	
Tantalum		3	
PFA coated on stainless steel		4	
PTFE on stainless steel 1.4404/316L (not in combination with an extension)		6 A	
Other version Add Order code and plain text: Material: ... ; Extension length: ...		9 Y	N 1 Y
Process connection on high-pressure side: Extension length			
None		A	
50 mm (1.97 inch)		B	
100 mm (3.94 inch)		C	
150 mm (5.90 inch)		D	
200 mm (7.87 inch)		E	
Other version: See option "9" for "Wetted parts materials"			
Process connection on high-pressure side: Nominal diameter/Nominal pressure			
DN 50, PN 40[6)]		B	
DN 80, PN 40		D	
DN 100, PN 16		G	
DN 100, PN 40		H	
2", class 150[6)]		L	
2", class 300[6)]		M	
3", class 150		Q	
3", class 300		R	
4", class 150		T	
4", class 300		U	
Other version, add Order code and plain text: Nominal diameter: ... ; Nominal pressure: ...		Z	Q 1 Y

© Siemens 2020

Selection and Ordering data	Article No.	Order code
Pressure transmitters for level, SITRANS P500 HART	7MF56 ■■ - ■■■■ 0 - ■■■■	■■■
Process connection on high-pressure side: Filling liquid		
Silicone oil M5	0	
Silicone oil M50	1	
High-temperature oil	2	
Halocarbon (for oxygen measurement)	3	
FDA compliant oil	4	
Other version, add	9	R1Y
Order code and plain text:		
Filling liquid: ...		

© Siemens 2020

Selection and Ordering data	Order code
Further designs Add "**-Z**" to Article No. and specify Order code.	
Display (Standard: no display, cover closed)	
With display and blanking cover	**A10**
With display and glass cover	**A11**
Special version: cover/enclosure	
Two coats of lacquer on enclosure, cover (PU on epoxy)	**A20**
Electrical connection and cable entry (Standard: no cable gland, only dust protection caps)	
Cable gland made of plastic (IP66/68)[4]	**A50**
Cable glands made of metal (IP66/68)	**A51**
Cable glands made of stainless steel (IP66/68)	**A52**
Device plug M12 without cable socket (IP66/67)[4]	**A60**
Device plug M12, cable socket (IP66/67)[4]	**A61**
Device plug Han 7D, plastic, straight (with cable socket) (IP65)[4]	**A71**
Device plug Han 7D, plastic, angled (with cable socket) (IP65)[4]	**A72**
Device plug Han 7D, metal enclosure, straight (with cable socket) (IP65)[4]	**A73**
Device plug Han 7D, metal enclosure, angled (with cable socket) (IP65)[4]	**A74**
Device plug Han 8D, plastic, straight (with cable socket) (IP65)[4][7]	**A75**
Device plug Han 8D, plastic, angled (with cable socket) (IP65)[4][7]	**A76**
Device plug Han 8D, metal enclosure, straight (with cable socket) (IP65)[4][7]	**A77**
Device plug Han 8D, metal enclosure, angled (with cable socket) (IP65)[4][7]	**A78**
PG 13.5 adapters[4]	**A82**
Language for labels, quick-start guide and menu language default[8] (instead of English as standard)	
German	**B10**
French	**B12**
Spanish	**B13**
Italian	**B14**
Chinese	**B15**
Russian	**B16**
Japanese	**B17**
English with units: psi/inH_2O	**B21**
Special version: Supplementary menu languages (Standard: English, German, French, Spanish, Italian)	
Asia language package (in addition: Chinese, Japanese, Russian)	**B80**
Certificates (available online for downloading)[1]	
Quality test certificate, 5-point factory calibration (IEC 60770-2)[2]	**C11**
Inspection certificate according to EN 10204-3.1[3]	**C12**
Inspection certificate (EN 10204-3.1); PMI test of parts in contact with medium	**C15**
Functional Safety (SIL2) Devices suitable for use according to IEC 61508 and IEC 61511. Includes SIL conformity declaration	**C20**
Degree of protection approvals: Ex ia/ib (intrinsic safety)	
Ex ia/ib protection (ATEX) (T4)	**E00**
Ex IS protection (FM) (T4)	**E01**
Ex IS protection ($_C$CSA$_{US}$) (T4)	**E02**
Ex ia/ib protection (NEPSI) (T4)	**E06**

Selection and Ordering data	Order code
Further designs Add "**-Z**" to Article No. and specify Order code.	
Degree of protection approvals: Ex d (flameproof)	
Ex d explosion-proof (ATEX)(T4/T6)	**E20**
Ex XP explosion-proof and DIP (FM)(T4/T6)	**E21**
Ex XP explosion-proof and DIP ($_C$CSA$_{US}$)(T4/T6)	**E22**
Ex d explosion-proof (NEPSI)(T4/T6)	**E26**
Degree of protection approvals: n/NI	
Zone 2 (nA, nL, ic) (ATEX) (T4/T6)	**E40**
Div2 NI, Div2 NI-field wiring (FM) (T4/T6)	**E41**
Zone 2 (nA, nL), Div2 NI ($_C$CSA$_{US}$) (T4/T6)	**E42**
Zone 2 (nA, nL) (NEPSI) (T4/T6)	**E46**
Degree of protection approvals: Zone 20/21/22	
Use in Zone 21/22 (Ex tD) (ATEX) Ex tb	**E60**
Use in Zone 20/21/22 (Ex iaD) (ATEX) Ex ta	**E61**
Use in Zone (Ex DIP) (ATEX) (NEPSI)	**E66**
Degree of protection approvals: Combinations	
IS protection and XP and DIP (FM)	**E71**
IS protection and XP and DIP ($_C$CSA$_{US}$)	**E72**
IS protection and XP and DIP (FM/$_C$CSA$_{US}$)	**E73**
Supplementary approvals / degree of protection	
Ex-protection Ex ia according to EAC Ex (Russia)	**E80**
Ex-protection Ex d according to EAC Ex (Russia)	**E81**
Dual Seal approval[5]	**E85**
Export approval Korea	**E86**
Special process connection versions (diff. pressure)	
Swap process connection: high-pressure side at front	**L33**
Mosquito protection 4 pcs. for ¼-18 NPT thread	**L36**
Process flanges, O-rings, special material **Standard: Viton (FKM (FPM)**	
Process connection sealing rings made of FFPM (Kalrez)	**L62**
Process connection sealing rings made of NBR	**L63**
Process connection sealing rings made of graphite	**L64**
Drain/Vent valve (1 set = 2 units)	
2 ventilation valves ¼- 18 NPT, in material of process flange)	**L80**
Vacuum-proof design	
Vacuum service	**V04**
Spark arrester For mounting on zone 0 (including documentation)	**V05**

1) Enclosed in print or as DVD: see page 1/319.
2) When also ordering the quality test certificate (factory calibration) according to IEC 60770-2 for transmitters with mounted diaphragm seals: Order this certificate only together with the remote seals. The measuring accuracy of the total combination is certified here.
3) When also ordering the inspection certificate according to EN 10204-3.1 for transmitters with mounted diaphragm seals: Order this certificate as well in addition to the respective remote seals.
4) Not together with types of protection "Explosion-proof", "Ex nA" and "Intrinsic safety and explosion-proof"
5) Only in conjunction with FM and/or $_C$CSA$_{US}$
6) Not recommended for measuring span "D"
7) The device plug Han 8D is identical with the former Han 8U versio.
8) For option B15, B16 and B17 the menu language default is English. Otherwise the Option B80 (Asia language package) is necessary.
9) Cable glands must be ordered separately from "Further designs" (add "-Z" to Article No. and specify order code).

Selection and ordering data	Order code
Additional data Please add "**-Z**" to Article No. and specify Order code(s) and plain text.	
Measuring range to be set	
Specify in plain text:	
Linear characteristic curve (max. 5 characters): Y01: ... up to ... mbar, kPa, MPa, psi	**Y01**
Measuring point number and measuring point identifier (only standard ASCII character set)	
Specify in plain text:	
Measuring point number (TAG No.), max. 16 characters Y15:	**Y15**
Measuring point text (max. 27 char.) Y16:	**Y16**
Entry of HART address (TAG), max. 32 characters Y17:	**Y17**
Setting of pressure indication in pressure units	**Y21**
Specify in plain text (standard setting: mbar) Y21: bar, kPa, MPa, psi, ...	
Note: The following pressure units are selectable: bar, mbar, mm H_2O*), in H_2O*), ftH_2O*), mmHG, inHG, psi, Pa, kPa, MPa, g/cm^2, kg/cm^2, Torr, ATM, % or mA	
*) Reference temperature 20 °C	
Setting of pressure indication in non-pressure units[1)] Specify in plain text:	**Y22 +** **Y01**
Y22: ... up to ... l/min, m^3/h, m, USgpm, ... (specification of measuring range in pressure units "Y01" is essential, unit with max. 5 characters)	
Customer-specific settings	
Damping setting (range: 0 ... 100 s) (Standard setting: 2 s)	**Y30**

[1)] Preset values can only be changed over SIMATIC PDM.

© Siemens 2020

Dimensional drawings

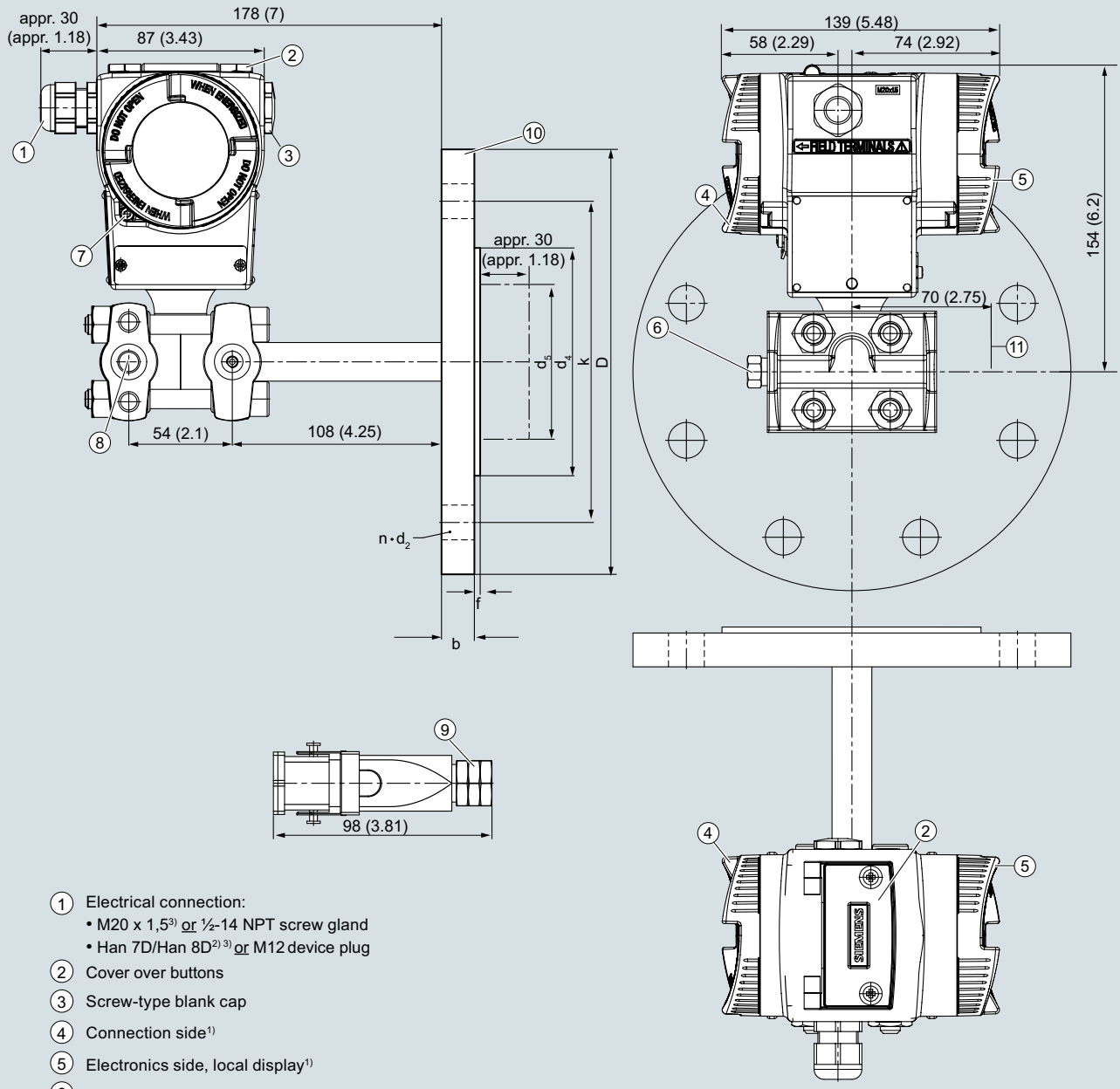

1. Electrical connection:
   - M20 x 1,5[3] or ½-14 NPT screw gland
   - Han 7D/Han 8D[2) 3)] or M12 device plug
2. Cover over buttons
3. Screw-type blank cap
4. Connection side[1]
5. Electronics side, local display[1]
6. Process connection, negative side with valve (optional) or screwed joint (optional)
7. Screw lid - safety bracket
8. Process connection: negative side ¼-18 NPT (IEC 61518)
9. Electrical connection:
   - Han 7D/Han 8D device plug[2) 3)]
10. Mounting flange as per EN 1092-1 or ASME B16.5
11. Space for rotation of enclosure

1) In addition, allow approx. 20 mm (0.79 inch) for the thread length
2) Not with "flameproof enclosure" type of protection
3) Not with type of protection "FM + CSA" [is + XP]"

SITRANS P pressure transmitter for filling level, P500 series, measurements in mm (inch)

© Siemens 2020

Connection to EN 1092-1

Nominal diameter	Nominal pressure	b	D	d	d_2	d_4	d_5	d_M	f	k	n	L
		mm	mm	mm	mm	mm	mm	mm	mm	mm		mm
DN50	PN 40	20	165	61	18	102	48.3	45[1)]	2	125	4	0, 50, 100, 150 or 200
DN 80	PN 40	24	200	90	18	138	76	72[2)]	2	160	8	
DN 100	PN 16	20	220	115	18	158	94	89	2	180	8	
	PN 40	24	235	115	22	162	94	89	2	190	8	

Connection to ASME B16.5

Nominal diameter	Nominal pressure	b	D	d_2	d_4	d_5	d_M	f	k	n	L
	lb/sq.in.	inch (mm)	inch (mm)	inch (mm)	inch (mm)	inch (mm)	inch (mm)	inch (mm)	inch (mm)		inch (mm)
2 inch	class 150	0.77 (19.5)	5.91 (150)	0.75 (19.0)	3.62 (92)	1.9 (48.3)	1.77 (45)[1)]	0.079 (2.0)	4.75 (120.7)	4	0, 2, 3.94, 5.94 or 7.87 (0, 50, 100, 150 or 200)
	class 300	0.89 (22.7)	6.49 (165)	0.75 (19.0)	3.62 (92)	1.9 (48.3)	1.77 (45)[1)]	0.079 (2.0)	5.0 (127)	8	
3 inch	class 150	0.96 (24.3)	7.5 (190.5)	0.75 (19.0)	5 (127)	3.0 (76)	2.83 (72)[2)]	0.079 (2.0)	6 (152.4)	4	
	class 300	1.14 (29.0)	8.27 (210)	0.87 (22.2)	5 (127)	3.0 (76)	2.83 (72)[2)]	0.079 (2.0)	6.69 (168.3)	8	
4 inch	class 150	0.96 (24.3)	9.06 (230)	0.75 (19.0)	6.19 (157.2)	3.69 (94)	3.5 (89)	0.079 (2.0)	7.5 (190.5)	8	
	class 300	1.27 (32.2)	10.04 (255)	0.87 (22.2)	6.19 (157.2)	3.69 (94)	3.5 (89)	0.079 (2.0)	7.88 (200)	8	

Explanations of tables:

d: Internal diameter of gasket to DIN 2690

d_M: Effective diaphragm diameter

d_5: Diameter of extension

f: Milling edge

L: Extension length

1) 59 mm = 2.32 inch with tube length L=0.

2) 89 mm = 3½ inch with tube length L=0.

© Siemens 2020

Selection and Ordering data

	Article No.
Mounting brackets For differential pressure transmitters with flange thread M10 (7MF54..-…10 and 7MF54..-…50)	
• Made of steel	**7MF5987-1AA**
• Made of stainless steel	**7MF5987-1AD**
Mounting brackets for differential pressure transmitter with flange thread 7/16-20 UNF (7MF54..-…00 and 7MF54..-…40)	
• Made of steel	**7MF5987-1AC**
• Made of stainless steel	**7MF5987-1AF**
Cover	
Made of die-cast aluminum, including O-ring	
• Without inspection window	**7MF5987-1BE**
• With inspection window	**7MF5987-1BF**
Made of stainless steel, including seal	
Digital indicator Including mounting material	**7MF5987-1BR**
TAG plate (incl. fastening material)	
Without inscription (5 pcs.)	**7MF5987-1CA**
Printed (1 pc.) Data according to Y01 or Y02, Y15 and Y16 (see "SITRANS P transmitters")	**7MF5987-1CB-Z** **Y..: .....**
Mounting screws	
For TAG plate, grounding and connection terminals and securing and locking screws (30 units)	**7MF5987-1CC**
Sealing plugs for process flange (1 set = 2 units)	
• Made of stainless steel	**7MF4997-1CG**
• Made of Hastelloy	**7MF4997-1CH**
Screw plugs with valve Complete (1 set = 2 parts)	
• Made of stainless steel	**7MF4997-1CP**
• Made of Hastelloy	**7MF4997-1CQ**
Connection board (incl. fastening material)	
HART, intrinsically safe Ex ia for installation in transmitter enclosure (observe warranty conditions)	**7MF5987-1DM**
Push buttons assembly (incl. fastening material)	**7MF5987-2AF**
For replacement of operating keys for on-site operation of the transmitter	
Sealing ring for	
• Process connection	**See catalog FI01, "Fittings"**
• NBR sealing ring for screw cover (10 pcs.)	**7MF4997-2EA**
• NBR sealing ring for interface measuring cell/enclosure (10 pcs.)	**7MF4997-2EB**

Selection and Ordering data

	Article No.
Documentation	
The entire documentation is available for download free-of-charge in various languages at: http://www.siemens.com/processinstrumentation/documentation	
Compact operating instructions	
• German, Spanish, French, Italian, Dutch	**A5E02344532**
• Estonian, Latviaan, Lithuanian, Polish, Romanian	**A5E02307339**
• Bulgarian, Czech, Finnish, Slovakian, Slovenian	**A5E02307340**
• Danish, Greek, Portuguese, Swedish, Hungarian	**A5E02307341**
• Russian	**A5E02307338**
HART modem	
With USB interface	**7MF4997-1DB**
Certificates (order only via SAP) additional to internet download	
• Hard copy (to order)	**A5E03252406**
• On DVD (to order)	**A5E03252407**

For power supply units, see catalog FI01 "Supplementary Components".

© Siemens 2020

Dimensional drawings

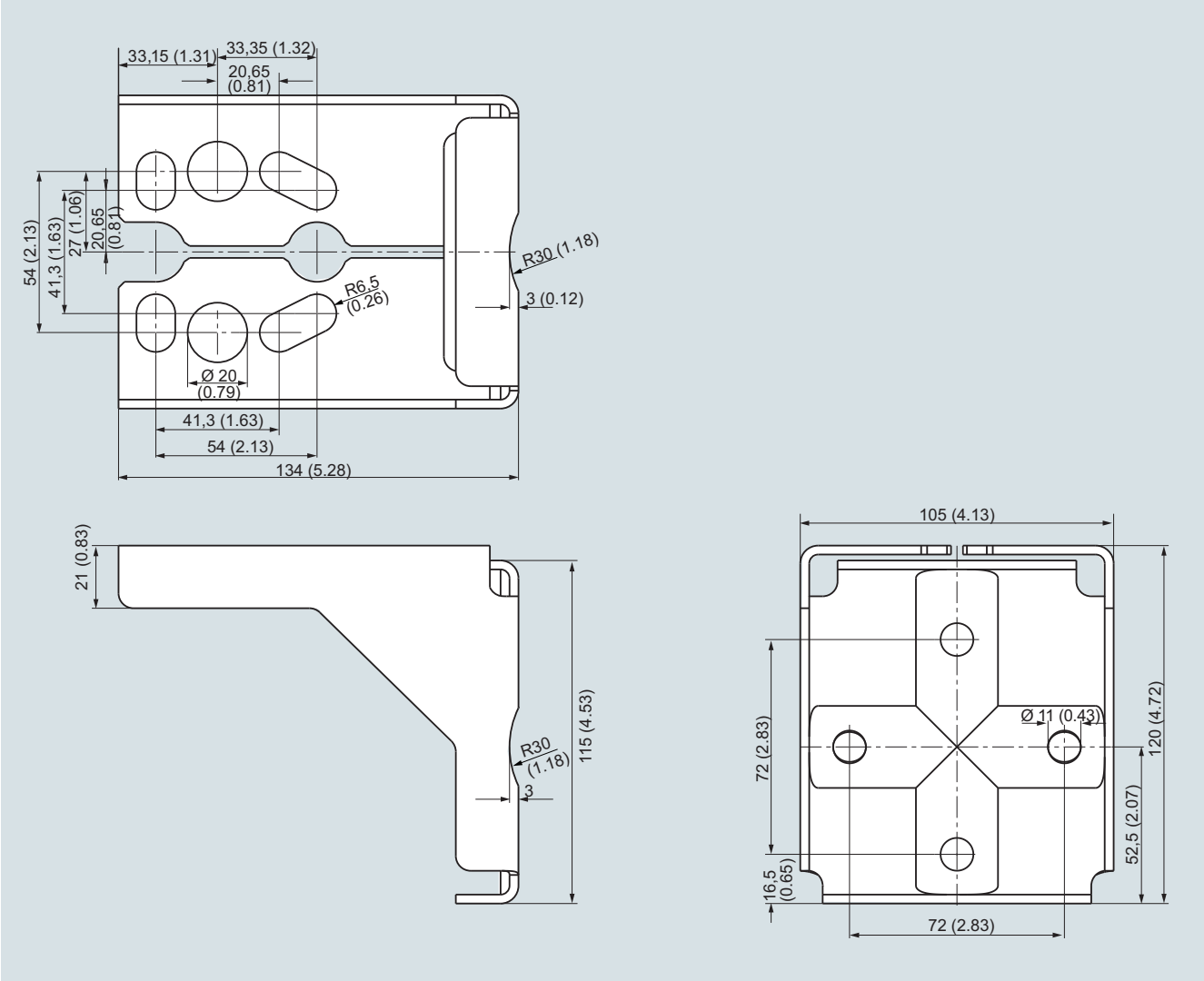

Mounting bracket for SITRANS P pressure transmitter, P500 series, measurements in mm (inch)
Mounting bracket material: Sheet-steel Mat. No. 1.0330, chrome-plated, or stainless steel Mat. No. 1.4301 (304)

© Siemens 2020

Overview

The SITRANS P500 transmitter can be delivered factory-fitted with the following valve manifolds:

- Valve manifolds 7MF9411-5BA: Three valve manifold for differential pressure transmitter
- Valve manifolds 7MF9411-5CA: Three valve manifold for differential pressure transmitter

Design

The 7MF9411-5BA and 7MF9411-5CA valve manifolds are sealed with PTFE gaskets between the transmitter and the valve manifold.

Once installed, the complete unit is checked under pressure for leaks (compressed air 6 bar (2411 inH2O)) and is certified leak-proof with a factory certificate to EN 10204 - 2.2.

All valve manifolds should preferably be secured with the corresponding mounting brackets. The transmitters are mounted on the valve manifold and not on the unit itself.

If you order a mounting bracket when choosing the option "Factory mounting of valve manifolds", you will receive a mounting bracket for the valve manifold instead of a bracket for mounting the transmitter.

If you order an inspection certificate 3.1 to EN 10204 after choosing the option "Factory mounting of valve manifolds", a separate certificate is provided for the transmitter and for the valve manifold.

Selection and ordering Data

Valve manifold 7MF9411-5BA on SITRANS P pressure transmitter P500 for differential pressure and flow

Add -Z to the Article No. of the transmitter and add Order codes	Order code
SITRANS P500 7MF54..-...	
mounted with gaskets made of PTFE and screws made of	
• Chromized steel	**U01**
• Stainless steel	**U02**
Delivery incl. high-pressure test certified by factory certificate to EN 10204-2.2	
Further designs:	
Delivery includes mounting bracket and mounting clips made of	
• Steel	**A01**
• Stainless steel	**A02**
(instead of the mounting bracket supplied with the transmitter)	
Inspection certificate according to EN 10204-3.1 supplied for transmitters and mounted valve manifold	**C12**

Valve manifold 7MF9411-5CA on SITRANS P500 pressure transmitter for differential pressure and flow

Add -Z to the Article No. of the transmitter and add Order codes	Order code
SITRANS P500 7MF54..-...	
mounted with gaskets made of PTFE and screws made of	
• Chromized steel	**U03**
• Stainless steel	**U04**
Delivery incl. high-pressure test certified by factory certificate to EN 10204-2.2	
Further designs:	
Delivery includes mounting bracket and mounting clips made of	
• Steel	**A01**
• Stainless steel	**A02**
(instead of the mounting bracket supplied with the transmitter)	
Inspection certificate according to EN 10204-3.1 supplied for transmitters and mounted valve manifold	**C12**

© Siemens 2020

Dimensional drawings

Valve manifold 7MF9411-5BA with attached SITRANS P500 pressure transmitter for differential pressure and flow (incl. mounting bracket)

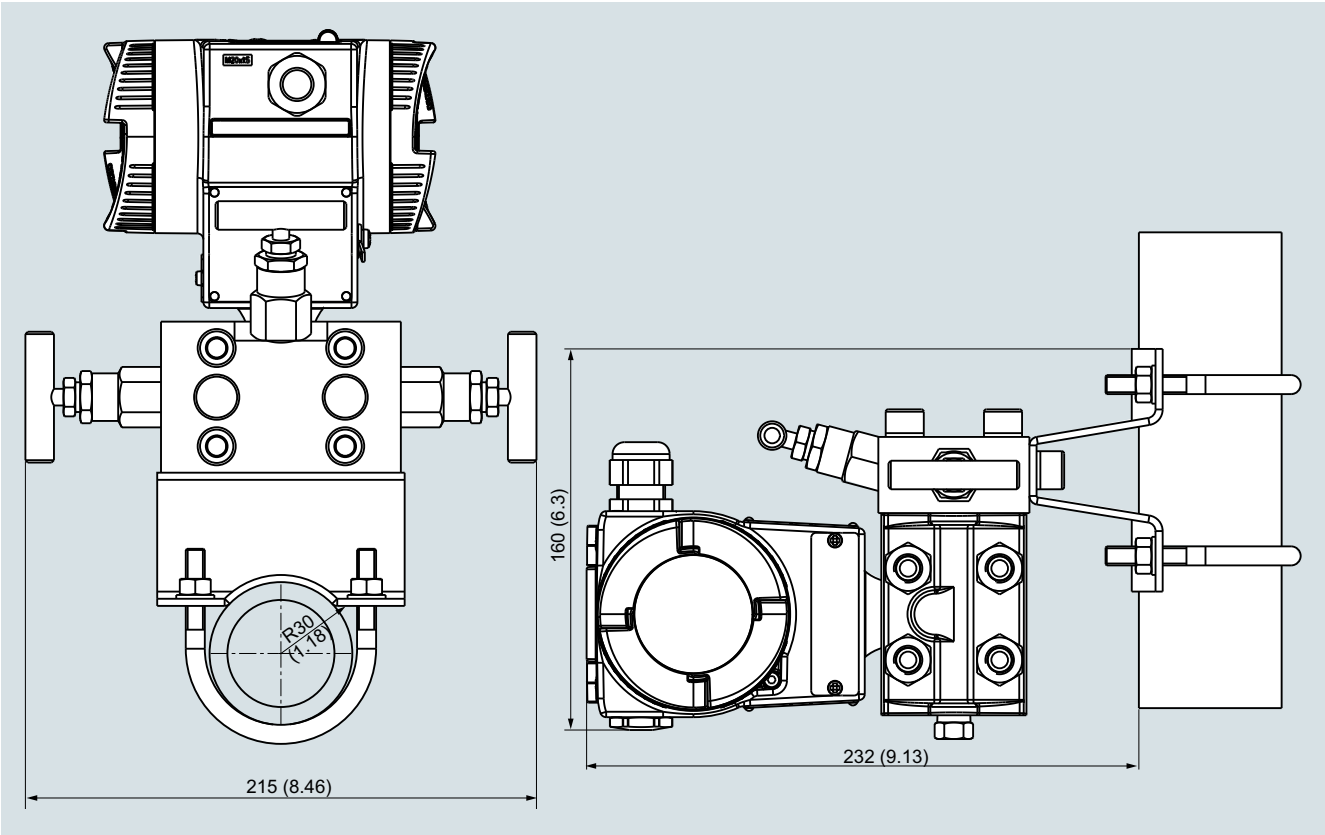

Valve manifold 7MF9411-5BA with attached SITRANS P500 pressure transmitter for differential pressure and flow, measurements in mm (inch)

© Siemens 2020

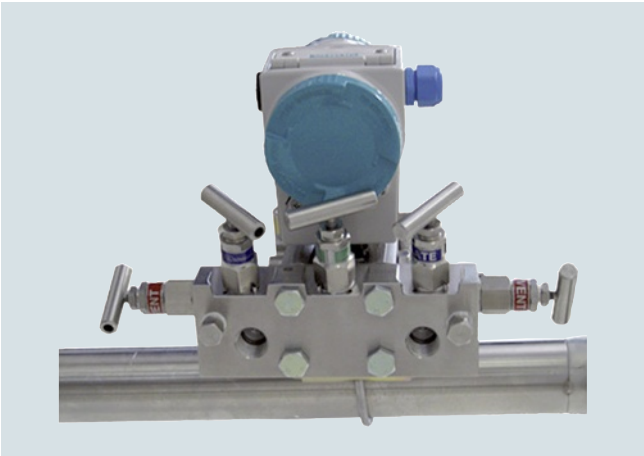

Valve manifold 7MF9411-5CA with attached SITRANS P500 pressure transmitter for differential pressure and flow (incl. mounting bracket)

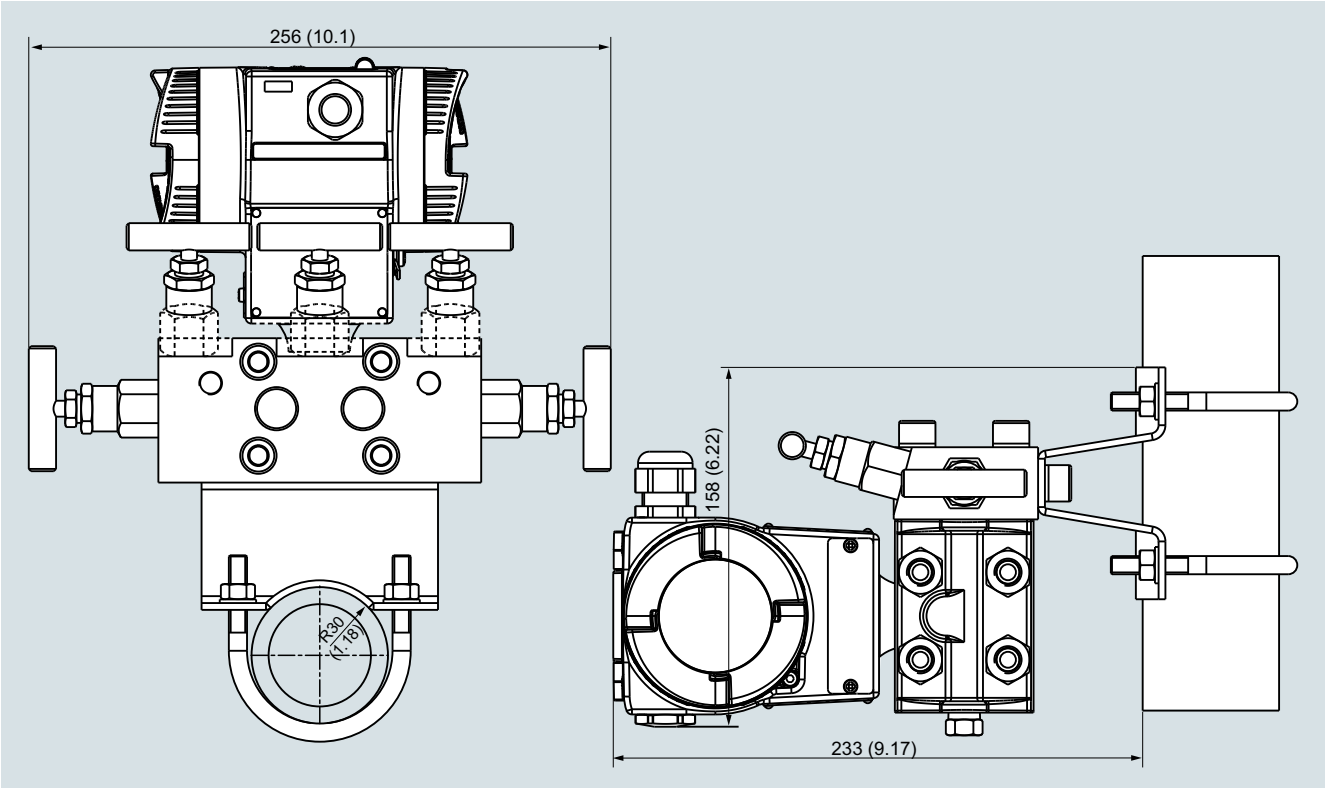

Valve manifold 7MF9411-5CA with attached SITRANS P500 pressure transmitter for differential pressure and flow, measurements in mm (inch)

© Siemens 2020

Overview

In many cases the pressure transmitter and the medium have to be physically separated. It is then necessary to use a remote seal.

The remote seals can be used with the SITRANS P320/420 pressure transmitter series:

- Pressure
- Absolute pressure
- Differential pressure and flow

Note

When configuring your remote seal, be sure to read the information about transmission response, temperature error and response time to be found in the sections "Function" and "Technical data". Only then will the remote seal work to optimum effect.

Benefits

- No direct contact between the pressure transmitter and the medium
- Individual configuration of the pressure transmitter for perfect adaptation to the operating conditions
- Available in many versions
- Specially designed for difficult operating conditions
- Quick-release versions available for the food industry

Application

Remote seal systems should be used if a separation between the medium and the measuring instrument is essential or appropriate.

Examples of such cases:

- The temperature of the medium is outside the limits specified for the pressure transmitter.
- The medium is corrosive and requires diaphragm materials which are not available for the pressure transmitter.
- The medium is highly viscous or contains solids which would block the measuring chambers of the pressure transmitter.
- The medium may freeze in the measuring chambers or pulse line.
- The medium is heterogeneous or fibrous.
- The medium tends towards polymerization or crystallization.
- The process requires quick-release remote seals, as necessary e.g. in the food industry for fast cleaning.
- The process requires cleaning of the measuring point, e.g. in a batch process.

Design

A remote seal system consists of the following components.

- Pressure transmitter
- One or two remote seals
- Filling liquid
- Connection between pressure transmitter and remote seal (direct mounting or by means of capillary)

The space for the medium is sealed off with a flat embedded elastic diaphragm. Between the diaphragm and the pressure transmitter is the filling liquid.

In many cases, a capillary must be connected between the remote seal and the pressure transmitter in order, for example, to reduce the temperature effects on the pressure transmitter when the measured medium is hot.

However, the capillary influences the activation time and the temperature response of the overall remote seal system. When capillaries are used to connect a remote seal to a pressure transmitter for differential pressure, two capillaries of equal length must always be used.

Optionally, the remote seal with diaphragm extension (tube) can be ordered.

The remote seals in sandwich design are secured with a blank flange.

Designs

Diaphragm seal

With diaphragm seals, the pressure is measured by means of a flat diaphragm which rests in a bed.

The following types of diaphragm seals exist:

Diaphragm seal of sandwich design without (left) and with a projecting diaphragm (tube)

- Sandwich design
- Sandwich design with projecting diaphragm (tube) to DIN or ASME which are secured using a dummy flange.

Diaphragm seal of flange design without (left) and with a projecting diaphragm (tube)

- Flange design
- Flange design with projecting diaphragm (tube) to DIN or ASME, secured using holes in the flange.

Quick-release diaphragm seal

- Quick-release remote seals, e.g. to DIN 11851, SMS standard, IDF standard, APV RJF standard, clamp connection, etc.
- Miniature diaphragm seal with male thread for screwing into tapped holes
- Remote seals with customer-specific process connections

© Siemens 2020

Miniature diaphragm seal with diaphragm flush with front

- Miniature diaphragm seals

The quick-release remote seals are used above all in the food industry. Their design means that the medium cannot accumulate in dead volumes. The quick-release clamp present on the remote seal means that quick dismounting is possible for cleaning.

Inline seal

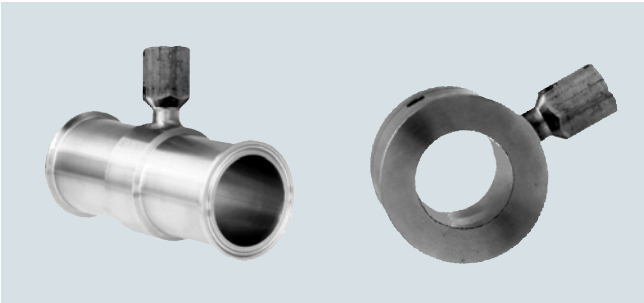

Inline seal with quick-release design (left) and for flange mounting

With inline seals, the pressure is first measured using a cylindrical diaphragm positioned in a pipe, and then transmitted to the pressure transmitter by means of the filling liquid.

The inline seal is a special design for flowing media. It consists of a cylindrical pipe in which a cylindrical diaphragm is embedded. Since it is completely integrated in the process pipe, no turbulences, dead volumes or other obstructions to the flow occur. Furthermore, the inline seal can be cleaned by a pig.

The following types of inline seals exist:

- Quick-release inline seals, e.g. to DIN 11851, SMS standard, IDF standard, APV/RJF standard, clamp connection etc. The quick-release facility attached to the remote seal enables the seal to be removed quickly for cleaning purposes.
- Inline seals for flanging to EN or ASME.
- Inline seals with customer-specific process connections.

Note:

The pressure data on the transmitter and the remote seal must be observed with regard to pressure/temperature behavior.

Function

The measured pressure is transferred from the diaphragm to the filling liquid and passes through the capillary to the measuring chamber of the pressure transmitter. The interior of the diaphragm seal and of the capillary, as well as the measuring chamber of the transmitter, are filled gas-free by the filling liquid.

Transmission response

The transmission response of a remote seal is characterized by the following variables:

- Temperature error
- Adjustment time

Temperature error

Temperature errors are caused by the change of volume of the filling liquid due to temperature variations. To select the right remote seal you must calculate the temperature error.

Below you will find an overview of the factors which influence the size of the temperature error, as well as information on how to calculate the temperature error.

The temperature error is dependent on the following variables:

- Rigidity of the diaphragm used
- Filling liquid used
- Influence of the filling liquid underneath the process flanges or in the connection shank of the pressure transmitter
- Internal diameter of the capillary: The bigger the internal diameter, the bigger the temperature error
- Length of the capillary: The longer the capillary, the bigger the temperature error

Diaphragm rigidity

The rigidity of the diaphragm is of decisive importance. The bigger the diameter of the diaphragm, the softer the diaphragm and the more sensitively it reacts to temperature-induced changes in volume of the filling liquid.

The result is that small measuring ranges are only possible with large diaphragm diameters.

Other factors apart from diaphragm rigidity which also play a role:

- Diaphragm thickness
- Diaphragm material
- Coatings if present

Filling liquid

Every filling liquid reacts to temperature variations with a change of volume. Temperature errors can be minimized by selecting a suitable filling liquid, but the filling liquid must also be appropriate for the temperature limits and operating pressure. Furthermore, the filling liquid must also be physiologically harmless.

Since the filling liquid is present under the diaphragm, in the capillary and under the process flange of the pressure transmitter (or in the connection shank), the temperature error must be calculated separately for each combination.

Note:

A vacuum-resistant remote seal is recommended for continuous low-pressure operation at 500 mbar a or below, including during commissioning (see ordering data).

An example of a temperature error calculation can be found in the section "Technical Specifications".

© Siemens 2020

Response time

The response time is dependent on the following factors:

- Internal diameter of the capillary: The bigger the internal diameter, the shorter the response time
- Viscosity of the filling liquid The greater the viscosity, the longer the response time
- Length of the capillary: The longer the capillary, the longer the response time
- Pressure in the pressure measuring system: The higher the pressure, the shorter the response time

Recommendations

The following should be observed to obtain an optimum combination of transmitter and remote seal:

- Choose the biggest possible diameter for the remote seal. The effective diameter of the seal diaphragm is then bigger and the temperature error smaller.
- Choose the shortest possible capillary. The response time is then shorter and the temperature error smaller
- Choose the filling liquid with the least viscosity and the smallest coefficient of expansion. Make sure, however, that the filling liquid meets the process requirements with regard to pressure, vacuum and temperature. And ensure that the filling liquid and the medium are compatible with one another.
- Note the following points for use in the vacuum range:
  - The pressure transmitter must always be positioned below the lowest spigot.
  - The operating range of some filling liquids is very limited with regard to the permissible temperature of the medium.
  - A vacuum-proof seal is necessary for continuous operation in the low-pressure range.
- Recommendations for the minimum measuring span can be found in the section "Technical data".

Note

The remote seals listed here are a selection of the most common designs. On account of the large variety of process connections, certain remote seals which are not listed here may be available nevertheless.

Other versions can be:

- Other process connections, standards
- Aseptic or sterile connections
- Other dimensions
- Other nominal pressures
- Special diaphragm materials, including coatings
- Other sealing faces
- Other filling liquids
- Other capillary lengths
- Sheathing of capillaries with protective hose
- Calibration at higher/lower temperatures etc.

Please contact your local Siemens office for further information.

Negative pressure service

Liquids, such as silicone oils, inert or those suitable for food, are used in remote seal systems for transmission of the process pressure to the pressure transmitter.

In each liquid, particles have the tendency to leave the liquid compound with increasing temperature (transition from liquid to gaseous aggregate state). This means the vapor pressure increases with increasing temperature and is dependent on the substance or mixture being present.

The higher the temperature and the lower the associated process pressure in the liquid, the more difficult it gets to guarantee the desired transmission properties of the fill fluid and therefore the measuring arrangement.

Plus the sealing elements at the transmitter must be designed so that a diffusion of molecules from the atmosphere into the remote seal system is prevented due to the constantly occurring negative pressure.

In addition to the influencing variables process pressure and process temperature, the vapor pressure curve of the fill fluid at the remote seal end and the stiffness of the remote seal membrane impact the functionality of the remote seal in the negative pressure range.

This means you have to pay special attention to the physical properties of fill fluids with applications in the negative pressure range.

There are three stages for the negative pressure resistance:

- **Standard design** of the remote seal without additional protective measures, suitable for the overpressure range and low negative pressure range. This design is identified with (1) in the diagrams below in section 3.
- **Negative pressure service** with suitable seals and treated fill fluid, identified with (2) in the diagrams below in section 3. Here you select the order codes D81 or D83, depending on the mounting type.·
- **Extended negative pressure service** with more extended treatment of the fill fluid and the remote seals, identified in the diagrams below. Here you select the order codes D85 or D88, depending on the mounting type.

There are two more areas in the diagrams. The area (4) identifies an area that has to be clarified with Technical Support prior to placing the order. The area (5) describes the area in which the remote seal fill fluid is permanently destroyed and the entire remote seal is therefore without function.

© Siemens 2020

Technical specifications of the remote seal filling liquids

Filling liquid	Number in the Article No.	Density at 20°C [kg/dm³]	Viscosity at 20°C [mm²/s]	Suitable for negative pressure service	Suitable for extended negative pressure service
Silicone oil M5	1	0.914	4	x	-
Silicone oil M50	2	0.966	50	x	x
High-temperature oil	3	1.070	57	x	x
Halocarbon oil	4	1.968	14	x	-
Food oil (FDA-listed)	7	0.920	10	x	x

The suitable negative pressure service is specified with the pressure/temperature curves of the respective liquids described below.

Note: For reasons of operational safety, the transmitter must not exceed the height of the remote seal - with differential pressure applications, the height of the bottom remote seal - for measurements in the negative pressure range. The associated installation types B, C1, C2 or H are described at the end of this section under the topic "Measuring arrangements".

Selection of the required negative pressure service

The procedure for determining the required negative pressure service is described below using the silicone oil M5 as fill fluid. The minimum existing process pressure of a fictitious process is 200 $mbar_{abs}$ (2.9 psi) (at a maximum process temperature of 150 °C (302 °F)). This intersection is identified by an "✖" in the diagram below. This means the negative pressure service D81 or D83 (depending on the application) is sufficient in this example.

The suitable negative pressure resistance is determined this way for all other fill fluids.

Note:
Note the response times according to the table on page 1/336.

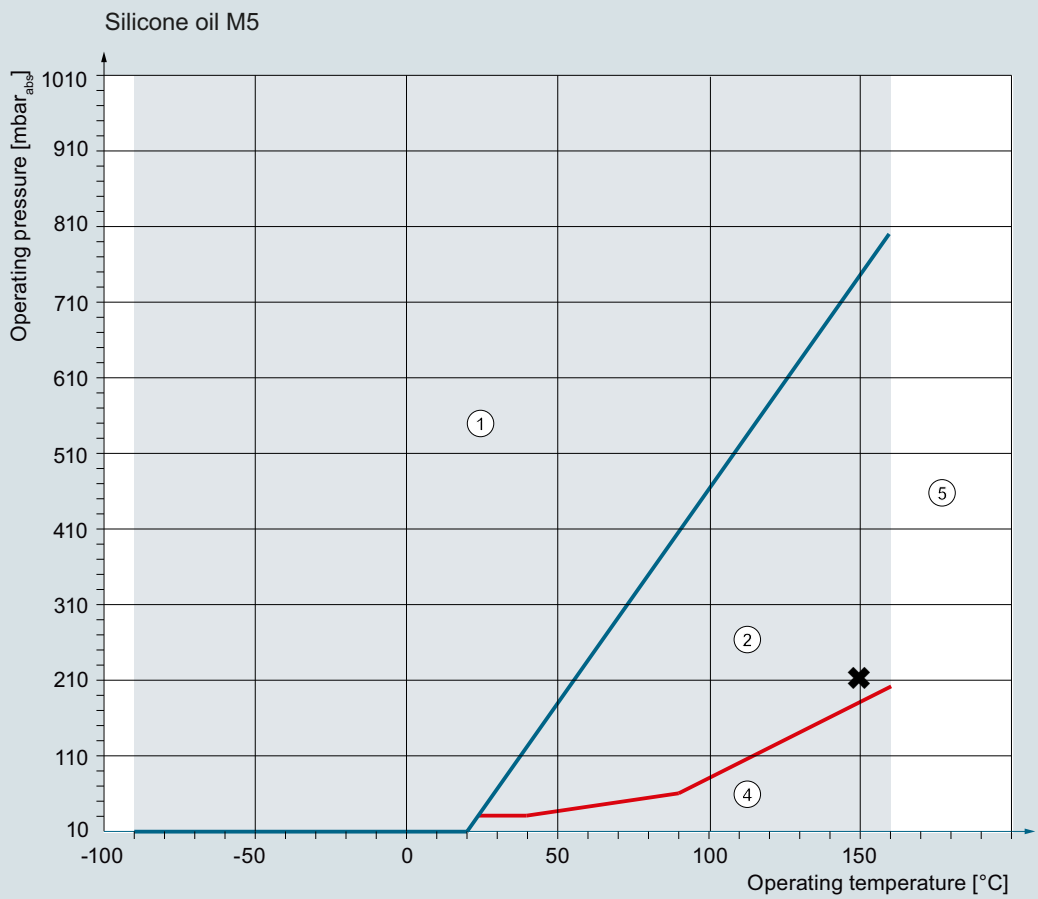

(1) Operating range of the standard remote seal design without special measures.

(2) Operating range for which the **negative pressure service D81 or D83** is required.
Note: An extended negative pressure service is **not** possible for this fill fluid.

(4) Please contact Technical Support for applications in this area.
Detailed information regarding application, process and ambient data are necessary.

(5) Area in which you have to expect the destruction of the fill fluid.
A function of the remote seal is not specified here.

Permissible operating range:
Max. temperature limit: 160 °C
Min. temperature limit: -90 °C

Negative pressure applications with silicone oil M5

© Siemens 2020

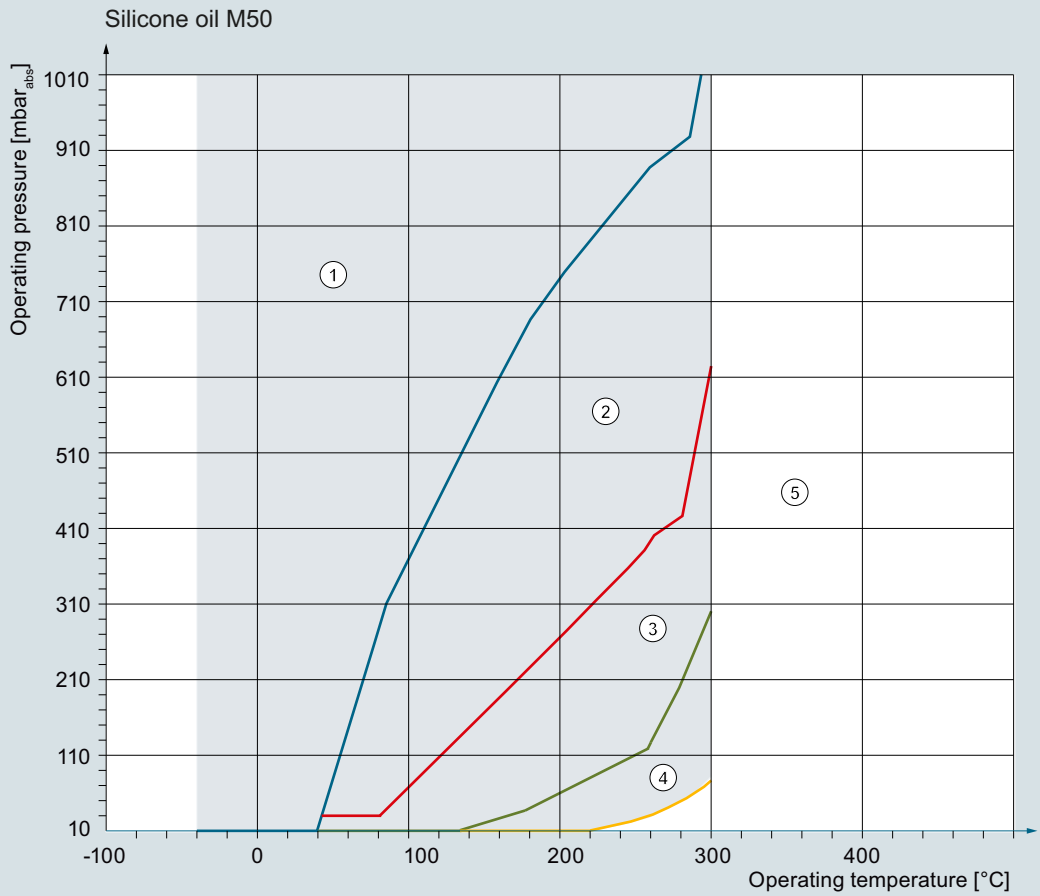

1 Operating range of the standard remote seal design without special measures.

2 Operating range for which the **negative pressure service D81 or D83** is required.

3 Operating range for which the **extended negative pressure service D85 or D88** is required

4 Please contact Technical Support for applications in this area.
Detailed information regarding application, process and ambient data are necessary.

5 Area in which you have to expect the destruction of the fill fluid.
A function of the remote seal is not specified here.

Permissible operating range:
Max. temperature limit: 300 °C
Min. temperature limit: -40 °C

Negative pressure applications with silicone oil M50

© Siemens 2020

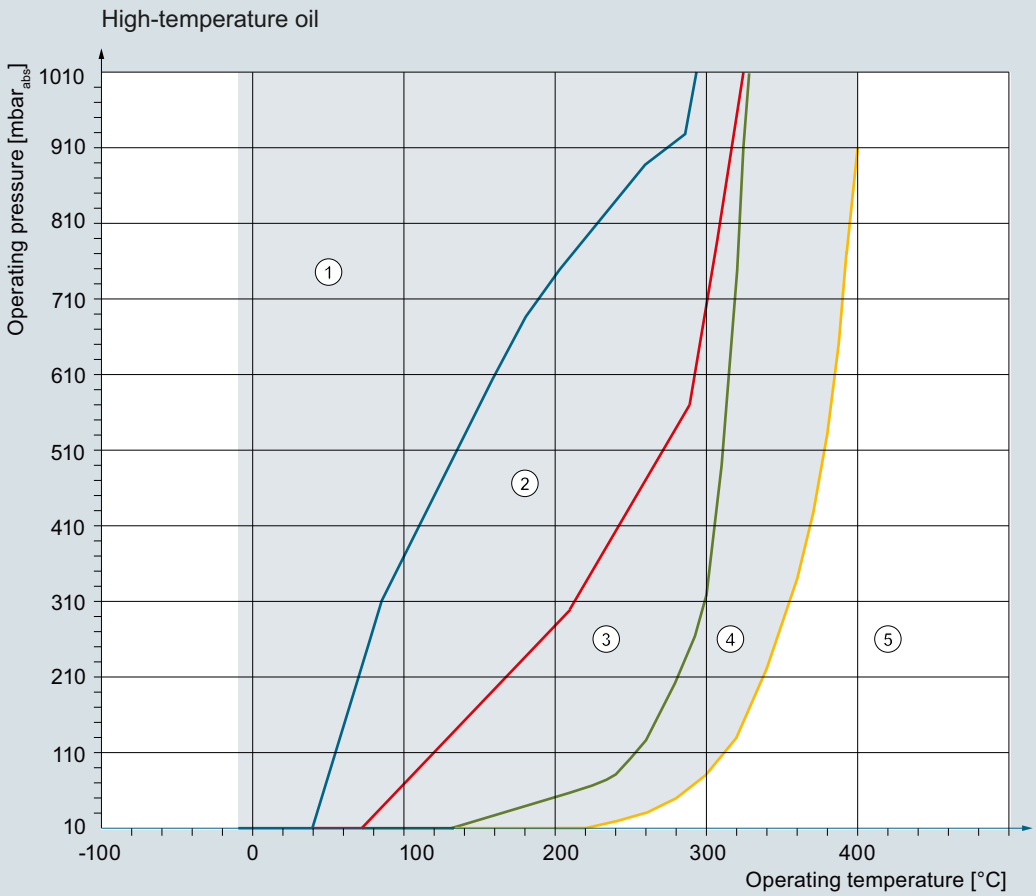

1. Operating range of the standard remote seal design without special measures.
2. Operating range for which the **negative pressure service D81 or D83** is required.
3. Operating range for which the **extended negative pressure service D85 or D88** is required
4. Please contact Technical Support for applications in this area.
   Detailed information regarding application, process and ambient data are necessary.
5. Area in which you have to expect the destruction of the fill fluid.
   A function of the remote seal is not specified here.

Permissible operating range:
Max. temperature limit: 400 °C
Min. temperature limit: -10 °C

Negative pressure applications with high-temperature oil

© Siemens 2020

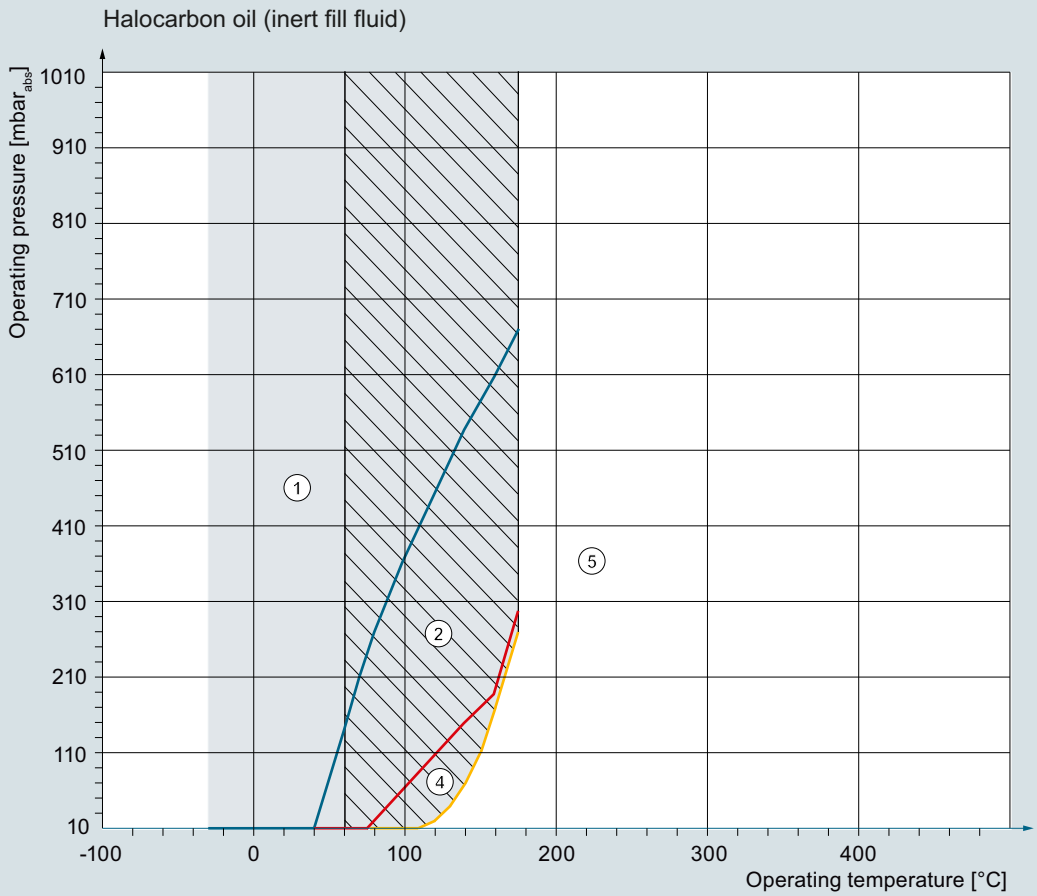

1 Operating range of the standard remote seal design without special measures.

2 Operating range for which the **negative pressure service D81 or D83** is required.
Note: An extended negative pressure service is **not** possible for this fill fluid.

4 Please contact Technical Support for applications in this area.
Detailed information regarding application, process and ambient data are necessary.

5 Area in which you have to expect the destruction of the fill fluid.
A function of the remote seal is not specified here.

Permissible operating range:
Max. temperature limit: 175 °C
Min. temperature limit: -30 °C

Oxygen application for operating temperature between 60 and 175 °C
and also for operating pressure > 50 bar not permissible.

Negative pressure applications with halocarbon oil (inert filling liquid)

A BAM approval for process temperatures up to 60 °C (140 °F) and system pressures up to 50 bar (725 psi) is available for the oxygen application.

© Siemens 2020

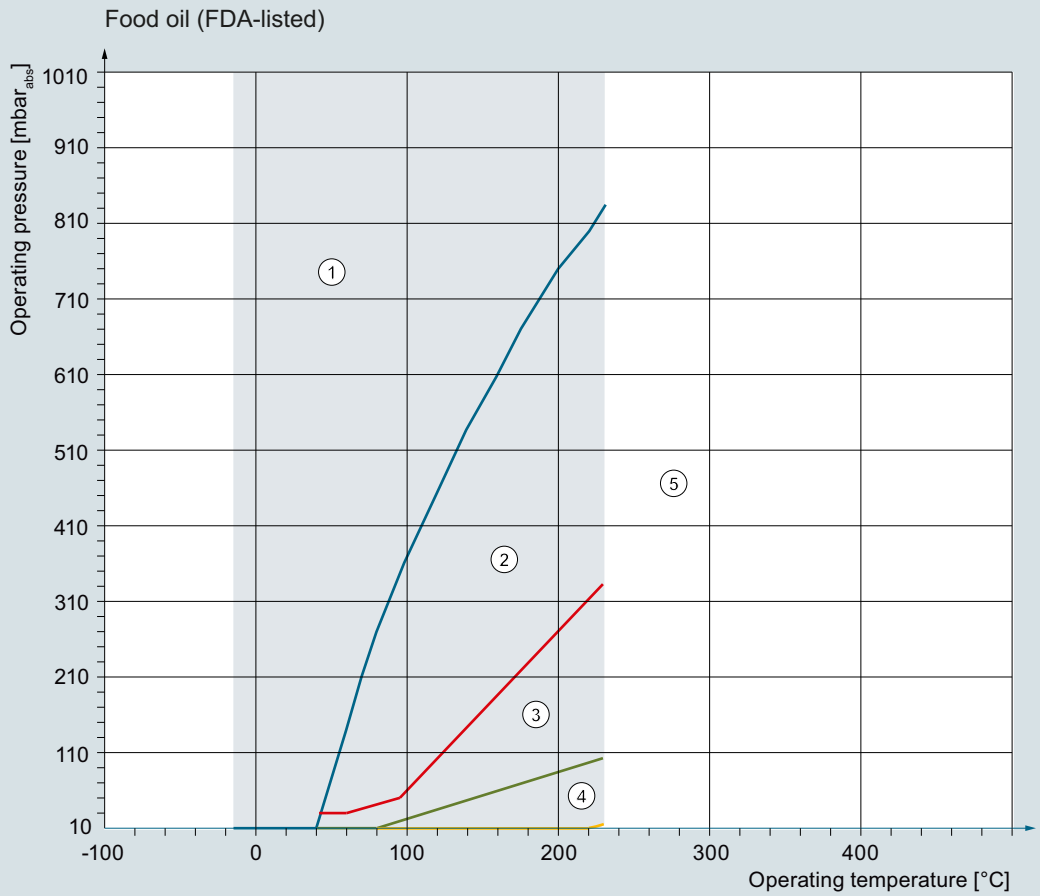

1 Operating range of the standard remote seal design without special measures.

2 Operating range for which the **negative pressure service D81 or D83** is required.

3 Operating range for which the **extended negative pressure service D85 or D88** is required

4 Please contact Technical Support for applications in this area.
Detailed information regarding application, process and ambient data are necessary.

5 Area in which you have to expect the destruction of the fill fluid.
A function of the remote seal is not specified here.

Permissible operating range:
Max. temperature limit: 230 °C
Min. temperature limit: -15 °C

Negative pressure applications with food oil (FDA listed)

© Siemens 2020

Technical specifications

Temperature error Diaphragm seals

Temperature errors of diaphragm seals when connected to pressure transmitters for pressure, absolute pressure, differential pressure (single-sided) and level

	Nominal diameter/ design	Diaphragm diameter		Temperature error of remote seal f_{RS}		Temperature error of capillary f_{Cap}		Temperature error of process flange/connection spigot f_{PF}		Recommended min. measuring spans (guidance values, observe temp. error)	
		mm	(inch)	mbar/ 10 K	(psi/ 10 K)	mbar/ (10 K · m_{Cap})	(psi/ (10 K · m_{Cap}))	mbar/ 10 K	(psi/ 10 K)	mbar	(psi)
Sandwich design or with flange to EN 1092-1	DN 50 without tube	59	(2.32)	1.5	(0.022)	2	(0.029)	2	(0.029)	200	(2.90)
	DN 50 with tube	45	(1.89)	5	(0.073)	10	(0.145)	10	(0.145)	500	(7.25)
	DN 80 without tube	89	(3.50)	0.2	(0.003)	0.2	(0.003)	0.2	(0.003)	100	(1.45)
	DN 80 with tube	72	(2.83)	1	(0.015)	1	(1.015)	1	(1.015)	250	(3.63)
	DN 100 without tube	89	(3.50)	0.2	(0.003)	0.4	(0.006)	0.4	(0.006)	100	(1.45)
	DN 100 with tube	89	(3.50)	0.4	(0.006)	0.4	(0.006)	0.4	(0.006)	100	(1.45)
	DN 125 without tube	124	(4.88)	0.2	(0.003)	0.1	(0.002)	0.1	(0.002)	20	(0.29)
	DN 125 with tube	124	(4.88)	0.2	(0.003)	0.1	(0.002)	0.1	(0.002)	20	(0.29)
Sandwich design or with flange to ASME B16.5	2 inch without tube	59	(2.32)	1.5	(0.022)	2	(0.029)	2	(0.029)	200	(2.90)
	2 inch with tube	45	(1.89)	5	(0.073)	10	(0.145)	10	(0.145)	500	(7.25)
	3 inch without tube	89	(3.50)	0.2	(0.003)	0.2	(0.003)	0.2	(0.003)	100	(1.45)
	3 inch with tube	72	(2.83)	1	(0.015)	1	(1.015)	1	(1.015)	250	(3.63)
	4 inch without tube	89	(3.50)	0.2	(0.003)	0.4	(0.006)	0.4	(0.006)	100	(1.45)
	4 inch with tube	89	(3.50)	0.4	(0.006)	0.4	(0.006)	0.4	(0.006)	100	(1.45)
	5 inch without tube	124	(4.88)	0.2	(0.003)	0.1	(0.002)	0.1	(0.002)	20	(0.29)
	5 inch with tube	124	(4.88)	0.2	(0.003)	0.1	(0.002)	0.1	(0.002)	20	(0.29)
Remote seal with union nut to DIN 11851	DN 25	25	(0.98)	20	(0.290)	60	(0.870)	60	(0.870)	6000	(87)
	DN 32	32	(1.26)	8	(0.116)	25	(0.363)	25	(0.363)	4000	(58)
	DN 40	40	(1.57)	4	(0.058)	10	(0.145)	10	(0.145)	2000	(29)
	DN 50	52	(2.05)	4	(0.058)	5	(0.073)	5	(0.073)	500	(7.25)
	DN 65	59	(2.32)	3	(0.044)	4	(0.058)	4	(0.058)	500	(7.25)
	DN 80	72	(2.83)	1	(0.015)	1	(0.015)	1	(0.015)	250	(3.63)
Remote seal, screwed gland design	DN 50	52	(2.05)	4	(0.058)	5	(0.073)	5	(0.073)	500	(7.25)
Remote seal with threaded socket to DIN 11851	DN 25	25	(0.98)	20	(0.290)	60	(0.870)	60	(0.870)	6000	(87)
	DN 32	32	(1.26)	8	(0.116)	25	(0.363)	25	(0.363)	4000	(58)
	DN 40	40	(1.57)	4	(0.058)	10	(0.145)	10	(0.145)	2000	(29)
	DN 50	52	(2.05)	4	(0.058)	5	(0.073)	5	(0.073)	500	(7.25)
	DN 65	59	(2.32)	3	(0.044)	4	(0.058)	4	(0.058)	500	(7.25)
	DN 80	72	(2.83)	1	(0.015)	1	(0.015)	1	(0.015)	250	(3.63)
Clamp connection	1½ inch	32	(1.26)	8	(0.116)	25	(0.363)	25	(0.363)	4000	(58)
	2 inch	40	(1.57)	4	(0.058)	10	(0.145)	10	(0.145)	2000	(29)
	2½ inch	59	(2.32)	3	(0.044)	5	(0.073)	5	(0.073)	500	(7.25)
	3 inch	72	(2.83)	1	(0.015)	1	(0.015)	1	(0.015)	250	(3.63)
Miniature diaphragm seal	G1B	25	(0.98)	20	(0.290)	60	(0.870)	60	(0.870)	6000	(87)
	G1½B	40	(1.57)	4	(0.058)	10	(0.145)	10	(0.145)	2000	(29)
	G2B	52	(2.05)	4	(0.058)	5	(0.073)	5	(0.073)	500	(7.25)

Remarks:
- Values apply for the filling liquids silicone oil M5, silicone oil M50, high-temperature oil, halocarbon oil and food oil (FDA listed).
- Values apply to stainless steel as the diaphragm material.

© Siemens 2020

Temperature errors of diaphragm seals with connection to differential pressure transmitters (double-sided)

	Nominal diameter/ design	Diaphragm diameter		Temperature error of remote seal f_{RS}		Temperature error of capillary f_{Cap}		Temperature error of process flange/connection spigot f_{PF}		Recommended min. measuring spans (guidance values, observe temperature error)	
		mm	(inch)	mbar/ 10 K	(psi/ 10 K)	mbar/ (10 K · m_{Cap})	(psi/ (10 K · m_{Cap}))	mbar/ 10 K	(psi/ 10 K)	mbar	(psi)
Sandwich design or with flange to EN 1092-1	DN 50 without tube	59	(2.32)	0.3	(0.0043)	0.3	(0.0045)	0.3	(0.0045)	250	(3.626)
	DN 50 with tube	45	(1.89)	1.26	(0.018)	1.7	(0.025)	1.7	(0.025)	250	(3.626)
	DN 80 without tube	89	(3.50)	0.05	(0.001)	0.05	(0.001)	0.05	(0.0007)	50	(0.725)
	DN 80 with tube	72	(2.83)	0.24	(0.004)	0.17	(0.003)	0.17	(0.003)	100	(1.45)
	DN 100 without tube	89	(3.50)	0.05	(0.001)	0.07	(0.001)	0.07	(0.001)	50	(0.725)
	DN 100 with tube	89	(3.50)	0.1	(0.002)	0.07	(0.001)	0.07	(0.001)	50	(0.725)
	DN 125 without tube	124	(4.88)	0.05	(0.001)	0.03	(0.0004)	0.03	(0.0004)	20	(0.29)
	DN 125 with tube	124	(4.88)	0.05	(0.001)	0.03	(0.0004)	0.03	(0.0004)	20	(0.29)
Sandwich design with flange to ASME B16.5	2 inch without tube	59	(2.32)	0.3	(0.0043)	0.3	(0.0043)	0.3	(0.0045)	250	(3.626)
	2 inch with tube	45	(1.89)	1.26	(0.018)	1.7	(0.025)	1.7	(0.025)	250	(3.626)
	3 inch without tube	89	(3.50)	0.05	(0.001)	0.05	(0.0007)	0.05	(0.0007)	50	(0.725)
	3 inch with tube	72	(2.83)	0.24	(0.004)	0.17	(0.003)	0.17	(0.003)	100	(1.45)
	4 inch without tube	89	(3.50)	0.05	(0.001)	0.07	(0.001)	0.07	(0.001)	50	(0.725)
	4 inch with tube	89	(3.50)	0.1	(0.002)	0.07	(0.001)	0.07	(0.001)	50	(0.725)
	5 inch without tube	124	(4.88)	0.05	(0.001)	0.03	(0.0004)	0.03	(0.0004)	20	(0.29)
	5 inch with tube	124	(4.88)	0.05	(0.001)	0.03	(0.0004)	0.03	(0.0004)	20	(0.29)
Remote seal, screwed gland design	DN 50	52	(2.05)	1	(0.015)	0.83	(0.012)	0.83	(0.012)	250	(3.626)
Remote seal with union nut to DIN 11851	DN 50	52	(2.05)	1	(0.015)	0.83	(0.012)	0.83	(0.012)	250	(3.626)
	DN 65	59	(2.32)	0.7	(0.010)	0.67	(0.010)	0.67	(0.010)	250	(3.626)
	DN 80	72	(2.83)	0.24	(0.004)	0.17	(0.003)	0.17	(0.003)	100	(1.450)
Remote seal with threaded socket to DIN 11851	DN 50	52	(2.05)	1	(0.015)	0.83	(0.012)	0.83	(0.012)	250	(3.626)
	DN 65	59	(2.32)	0.7	(0.010)	0.67	(0.010)	0.67	(0.010)	250	(3.626)
	DN 80	72	(2.83)	0.24	(0.004)	0.17	(0.003)	0.17	(0.003)	100	(1.450)
Clamp connection	2 inch	40	(1.57)	1	(0.015)	2.5	(0.036)	2.5	(0.036)	2000	(29.01)
	2½ inch	59	(2.32)	0.7	(0.010)	0.67	(0.010)	0.67	(0.010)	250	(3.626)
	3 inch	72	(2.83)	0.24	(0.004)	0.17	(0.003)	0.17	(0.003)	100	(1.450)

Remarks:

- Values apply for the filling liquids silicone oil M5, silicone oil M50, high-temperature oil, halocarbon oil and food oil (FDA listed).
- Values apply to stainless steel as the diaphragm material.

© Siemens 2020

Temperature error inline seals

Temperature errors of inline seals when connected to pressure transmitters for gauge pressure and absolute pressure, and with single-sided connection to pressure transmitters for differential pressure

Nominal diameter/ design	Temperature error of remote seal f_{RS}		Temperature error of capillary f_{Cap}		Temperature error of process flange/connection spigot f_{PF}		Recommended min. measuring spans (guidance values, observe temperature error)	
	mbar/10 K	(psi/10 K)	mbar/10 K	(psi/10 K)	mbar/10 K	(psi/10 K)	mbar	(psi)
DN 25 (1 inch)	6.0	(0.0870)	8.5	(0.123)	8.5	(0.123)	1000	(14.5)
DN 40 (1½ inch)	4.5	(0.065)	4.5	(0.065)	4.5	(0.065)	250	(3.63)
DN 50 (2 inch)	4.0	(0.058)	3.0	(0.044)	3.0	(0.044)	100	(1.45)
DN 80 (3 inch)	9.5	(0.138)	5.0	(0.073)	5.0	(0.073)	100	(1.45)
DN 100 (4 inch)	8.0	(0.012)	3.0	(0.044)	3.0	(0.044)	100	(1.45)

Temperature errors of inline seals with double-sided connection to pressure transmitters for differential pressure

Nominal diameter/ design	Temperature error of remote seal f_{RS}		Temperature error of capillary f_{Cap}		Temperature error of process flange/connection spigot f_{PF}		Recommended min. measuring spans (guidance values, observe temperature error)	
	mbar/10 K	(psi/10 K)	mbar/10 K	(psi/10 K)	mbar/10 K	(psi/10 K)	mbar	(psi)
DN 25 (1 inch)	2.3	(0.033)	1.8	(0.026)	1.8	(0.026)	1000	(14.5)
DN 40 (1½ inch)	0.8	(0.012)	0.3	(0.004)	0.3	(0.004)	250	(3.63)
DN 50 (2 inch)	0.3	(0.004)	0.1	(0.002)	0.1	(0.002)	100	(1.45)
DN 80 (3 inch)	3.0	(0.044)	0.5	(0.007)	0.5	(0.007)	100	(1.45)
DN 100 (4 inch)	1.0	(0.015)	0.1	(0.002)	0.1	(0.002)	100	(1.45)

Remarks:

- Values apply for the filling liquids silicone oil M5, silicone oil M50, high-temperature oil, halocarbon oil and food oil (FDA listed).
- Half the values apply to glycerin/water mixture as the filling liquid.
- Values apply to stainless steel as the diaphragm material.
- Diaphragm thickness 0.05 mm (0.002 inch) for DN 25/DN 40/DN 50 and 0.1 mm (0.004 inch) for DN 80/DN 100

© Siemens 2020

Calculation of the temperature error

The following equation is used to calculate the temperature error:

$$dp = (\vartheta_{RS} - \vartheta_{Cal}) \cdot f_{RS} + (\vartheta_{Cap} - \vartheta_{Cal}) \cdot l_{Cap} \cdot f_{Cap} + (\vartheta_{TR} - \vartheta_{Cal}) \cdot f_{PF}$$

dp	Additional temperature error (mbar)
ϑ_{RS}	Temperature on remote seal diaphragm (generally corresponds to temperature of medium)
ϑ_{Cal}	Calibration (reference) temperature (20 °C (68 °F))
f_{RS}	Temperature error of remote seal
ϑ_{Cap}	Ambient temperature on the capillaries
l_{Cap}	Capillary length
f_{Cap}	Temperature error of capillaries
ϑ_{TR}	Ambient temperature on pressure transmitter
f_{PF}	Temperature error of the oil filling in the process flanges of the pressure transmitter

Example of temperature error calculation

Existing conditions:

SITRANS P pressure transmitter for differential pressure, 250 mbar, set to 0 ... 100 mbar, with DN 100 remote seal diaphragms without tube, diaphragm made of stainless steel, mat. No. 1.4404/316L	f_{RS} = 0.05 mbar/10 K (0.039 inH_2O/10 K)
Capillary length	l_{Cap} = 6 m (19.7 ft)
Capillaries fitted on both sides	f_{Cap} = 0.07 mbar/(10 K · m_{Cap}) (0.028 inH_2O/(10 K · m_{Cap}))
Filling liquid silicone oil M5	f_{PF} = 0.07 mbar/10 K (0.028 inH_2O/10 K)
Process temperature	ϑ_{RS} = 100 °C (212 °F)
Temperature on the capillaries	ϑ_{Cap} = 50 °C (122 °F)
Temperature on pressure transmitter	ϑ_{TR} = 50 °C (122 °F)
Calibration temperature	ϑ_{Cal} = 20 °C (68 °F)

Required:

Additional temperature error of remote seals: dp

Calculation:

in mbar

dp = (100 °C – 20 °C) · 0.05 mbar/10 K + (50 °C – 20 °C) · 6 m · 0.07 mbar/(10 K · m) + (50 °C – 20 °C) · 0.07 mbar/10 K

dp = 0.4 mbar + 1.26 mbar + 0.21 mbar

in inH_2O

dp = (212 °F - 68 °F) · 0.039 inH_2O/10 K + (112 °F - 68 °F) · 19.7 ft · 0.028 inH_2O/(10 K · 3.28 ft) + (112 °F - 68 °F) · (0.028 inH_2O/10 K)

dp = 0.16 inH_2O + 0.51 inH_2O + 0.08 inH_2O

Result:

dp = 1.87 mbar (0.75 inH_2O)
(corresponds to 2.27% of set measuring span)

Note

The determined temperature error only applies to the error resulting from connection of the remote seal.

The transmission response of the respective transmitter is not included in this consideration.
It must be calculated separately, and the resulting error added to the error determined above from connection of the remote seal.

Dependence of temperature error on diaphragm material

The temperature errors listed in the previous table are based on the use of stainless steel as the diaphragm material. If other diaphragm materials are used, the temperature errors change as follows:

Diaphragm material	Change in temperature error of remote seal
	Increase in values by
Stainless steel, Duplex, ...	See previous tables
Hastelloy C4, mat. No. 2.4602	50 %
Hastelloy C276, mat. No. 2.4819	50 %
Monel 400, mat. No. 2.4360	60 %
Tantalum	50 %
Titanium	50 %
PTFE coating on stainless steel diaphragm	80 %
ECTFE coating or PFA coating on stainless steel diaphragm	100 %
Gold coating on stainless steel diaphragm	40 %
Inconel	50 %
Incoloy	50 %

Maximum temperature of medium

Note:
When taking into account the maximum medium temperature, the application limits of the fill fluids and gaskets used as well as the pressure/temperature limits of the respective process connections must also be taken into consideration.

The following maximum temperatures of the medium apply depending on the material of the wetted parts.

Material	Max. temperature of medium	Min./max. pressure
Stainless steel, 316L	400 °C (752 °F)	No restriction
PTFE coating	200 °C (392 °F)	< 0 bar (0 psi); gauge pressure
	260 °C (500 °F)	0 bar (0 psi) ... 25 bar (363 psi); gauge pressure
	150 °C (302 °F)	25 bar (363 psi) ... 40 bar (580 psi); gauge pressure
	50 °C (302 °F)	40 bar (580 psi) ... 60 bar (870 psi); gauge pressure
ECTFE coating	150 °C (302 °F)	For pressures < 1 bar (14.5 psi) on request
PFA coating	200 °C (392 °F)	< 0 bar (0 psi); gauge pressure
	260 °C (500 °F)	25 bar (363 psi)/40 bar (580 psi); gauge pressure
	150 °C (302 °F)	40 bar (580 psi)/60 bar (870 psi); gauge pressure
	50 °C (302 °F)	For pressures < 1 bar (14.5 psi) on request
Hastelloy C4, mat. No. 2.4602	400 °C (752 °F)	No restriction
Hastelloy C276, mat. No. 2.4819	400 °C (752 °F)	No restriction
Hastelloy C22, mat. No. 2.4602	400 °C (752 °F)	No restriction
Monel 400, mat. No. 2.4360	400 °C (752 °F)	No restriction
Tantalum	300 °C (572 °F)	No restriction
Duplex, mat. No. 1.4462	250 °C (482 °F)	No restriction
Titanium	150 °C (302 °F)	No restriction
Inconel	400 °C (752 °F)	No restriction
Incoloy	400 °C (752 °F)	No restriction
Gold coating	400 °C (752 °F)	No restriction

© Siemens 2020

Maximum capillary length for diaphragm seals (guidance values)

Nom. diam.		Max. length of capillary			
		Diaphragm seal		inline seal	
		m	(ft)	m	(ft)
DN 25	(1 inch)	2.5	(8.2)	2.5	(8.2)
DN 32	(1¼ inch)	2.5	(8.2)	2.5	(8.2)
DN 40	(1½ inch)	4	(13.1)	6	(19.7)
DN 50	(2 inch)	6	(19.7)	10	(32.8)
DN 65	(2½ inch)	8	(26.2)	10	(32.8)
DN 80	(3 inch)	15	(49.1)	10	(32.8)
DN 100	(4 inch)	15	(49.1)	10	(32.8)
DN 125	(5 inch)	15	(49.1)	-	-

Response times

The values listed in the following table are the response times (in seconds per meter of capillary) for a change in pressure which corresponds to the set measuring span.

The listed values must be multiplied by the respective length of the capillary, or with transmitters for differential pressure and flow by the total length of both capillaries.

The response times are independent of the set measuring span within the range of the respective transmitter. The response times are of insignificant importance for measuring spans above 10 bar (145 psi). The response times of the pressure transmitters are not considered in the table.

Filling liquid	Density		Temperature on capillary		Response time in s/m (s/ft) with max. measuring span of pressure transmitter					
	kg/dm³	(lb/in³)	°C	(°F)	250 mbar	(101 inH_2O)	600 mbar	(241 inH_2O)	1600 mbar	(643 inH_2O)
Silicone oil M5	0.914	(0.033)	+60	(140)	0.06	(0.018)	0.02	(0.006)	0.01	(0.003)
			+20	(68)	0.11	(0.034)	0.02	(0.006)	0.02	(0.006)
			- 20	(-4)	0.3	(0.091)	0.12	(0.037)	0.05	(0.015)
Silicone oil M50	0.966	(0.035)	+60	(140)	0.6	(0.183)	0.25	(0.076)	0.09	(0.027)
			+20	(68)	0.61	(0.186)	0.26	(0.079)	0.1	(0.030)
			- 20	(-4)	1.69	(0.515)	0.71	(0.216)	0.27	(0.082)
High-temperature oil	1.070	(0.039)	+60	(140)	0.14	(0.043)	0.06	(0.018)	0.02	(0.006)
			+20	(68)	0.65	(0.198)	0.27	(0.082)	0.1	(0.030)
			-10	(14)	3.96	(1.207)	1.65	(0.503)	0.62	(0.189)
Halocarbon oil	1.968	(0.071)	+60	(140)	0.07	(0.021)	0.03	(0.009)	0.01	(0.003)
			+20	(68)	0.29	(0.088)	0.12	(0.037)	0.05	(0.015)
			- 20	(-4)	2.88	(0.878)	1.2	(0.366)	0.45	(0.137)
Food oil (FDA listed)	0.920	(0.033)	+60	(140)	0.75	(0.229)	0.33	(0.101)	0.17	(0.052)
			+20	(68)	4	(1.220)	1.75	(0.534)	0.67	(0.204)
			- 20	(-4)	20	(6.100)	8.5	(2.593)	3.25	(0.991)

Permissible data of filling liquids for pressure and temperature see diagrams on page 1/327 ff.

© Siemens 2020

More information

Specification of process conditions for selection and ordering data

Ambient temperature range

As standard, the remote seal systems are optimized for an ambient temperature range of -10 to +50 ° C (14 to +122 ° F). Therefore, in the ordering options, the **order code "D66" is** preset.

If the range of the ambient temperature deviates from this, you have the possibility to choose other ambient temperature ranges:

- With the **order code D67**, a range from -40 to +50 °C (-40 to +122 °F)
- With the **order code D68**, a range from -10 to +85 °C (14 to +185 °F)

In the case of a **special version**, which you can select with the **order option Y99** in the device settings, it is possible to enter the ambient temperature as a numerical value.

Process temperature

The standard optimization for the process temperature depends on the filling liquid used:

Filling liquid	Code	Optimized temperature range as standard
Silicone M50	B	-10 ... +200 °C (14 ... +392 °F)
High-temperature oil	C	-10 ... +300 °C (14 ... +572 °F)
Silicone oil M5	A	-40 ... +140 °C (-40 ... +284 °F)
Food-grade oil (FDA grade)	E	-10 ... +140 °C (14 ... +284 °F)
Halocarbon oil	D	-20 ... +60 °C (-4 ... +140 °F)

- **If the process temperatures** deviate from the temperature ranges mentioned in the table above, we ask you to send the process temperature with the **order code Y50** along with the order.
- If the remote seal has a small diameter (< DN 50/2") or a long capillary (> 4 m), we also ask you to provide the process data with the **following order code** when ordering.

These entries are transmitted and ensure the correct functioning of the remote seal systems.

Ambient temperature range	Order code
• -10 ... +50 °C (14 ... +122 °F) preset	**D66**
• -40 ... +50 °C (-40 ... +122 °F)	**D67**
• -10 ... +85 °C (14 ... +185 °F)	**D68**
Process temperature min. ... °C/(°F)/max. ... °C/(°F)	**Y50**

© Siemens 2020

Overview

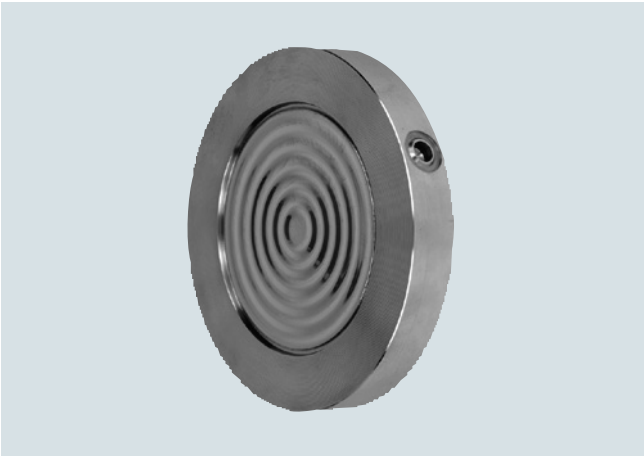

Diaphragm seals of sandwich design

Technical specifications

Diaphragm seals of sandwich design	
Nominal diameter	Nominal pressure
Connecting standard EN 1092-1	
• DN 25, DN 40, DN 50, DN 65, DN 80, DN 100, DN 125	PN 16 ... PN 400
Connecting standard ASME B16.5	
• 1 inch, 1½ inch, 2 inch, 2½ inch, 3 inch, 4 inch, 5 inch	Class 150 ... class 2500
Connecting standard J.I.S.	
• DN 25, DN 40, DN 50, DN 65, DN 80, DN 100, DN 125	10K ... 63K
Sealing surface	
• For stainless steel, mat. No. 1.4404/316L	To EN 1092-1, form B1 or ASME B16.5 RF 125 ... 250 AA
• For the other materials	To EN 1092-1, form B2 or ASME B16.5 RFSF
Materials	
• Main body	Stainless steel mat. no. 1.4404/316L
• Wetted parts	Stainless steel mat. no. 1.4404/316L
	• Without coating
	• PTFE coating
	• ECTFE coating (for vacuum on request)
	• PFA coating
	Monel 400, mat. No. 2.4360
	Hastelloy C276, mat. No. 2.4819
	Hastelloy C4, mat. No. 2.4602
	Hastelloy C22, mat. no. 2.4602
	Tantalum
	Titanium, mat. no. 3.7035
	Nickel 201
	Duplex 2205, mat. no. 1.4462
	Stainless steel 316L, gold plated, thickness approx. 25 µm
• Capillary	Stainless steel, mat. No. 1.4571/316Ti
• Sheath	Spiral protective tube made of stainless steel, mat. No. 1.4404/316L

Sealing material in the process flanges	
• For pressure transmitters, absolute pressure transmitters and low-pressure applications	Copper
• For other applications	Viton
Maximum pressure	See above and the technical data of the pressure transmitters
Tube length	Without tube as standard (tube available on request)
Capillary	
• Length	Max. 10 m (32.8 ft), longer lengths on request
• Internal diameter	max. 2 mm (0.079 inch)
• Minimum bending radius	150 mm (5.9 inch)
Filling liquid	Silicone oil M5
	Silicone oil M50
	High-temperature oil
	Halocarbon oil (for measuring O_2)
	Food grade oil (FDA listed)
Permissible ambient temperature	Dependent on the pressure transmitter and the filling liquid of the remote seal
	More information can be found in the technical data of the pressure transmitters and in the section "Technical data of filling liquid" in the Technical description to the remote seals
Weight	Approx. 4 kg (8.82 lb)
Certificate and approvals	
Classification according to pressure equipment directive (DGRL 2014/68/EU)	For gases of fluid group 1 and liquids of fluid group 1; complies with requirements of article 4, paragraph 3 (sound engineering practice)

© Siemens 2020

Selection and Ordering data	Article No.	Order code
Diaphragm seal		
Sandwich type design, with flexible capillary tube, connected with flexible capillary tube to a		
• SITRANS P320/P420 transmitter for gauge pressure or absolute pressure (only together with negative pressure service), 7MF03../7MF04.. order separately Scope of delivery: 1 off	7MF0800-	
• SITRANS P320/P420 transmitter for absolute pressure, 7MF03../7MF04.. order separately, Scope of delivery: 1 off	7MF0801-	
• SITRANS P320/P420 transmitter for differential pressure and flow, 7MF03../7MF04.. order separately, Scope of delivery: 2 off	7MF0802-	
	■■■■■■-0■■■	■■■
↗ Click on the Article No. for the online configuration in the PIA Life Cycle Portal.		
Nominal diameter **Nominal pressure**		
Connecting standard EN 1092-1		
(DN 25, DN 40 and DN 50 recommended only for pressure transmitters)		
DN 25 PN 16 ... 400	0BQ	
DN 40 PN 16 ... 400	0DQ	
DN 50 PN 16 ... 400	0EQ	
DN 65 PN 16 ... 400	0FQ	
DN 80 PN 16 ... 400	0GQ	
DN 100 PN 16 ... 400	0HQ	
DN 125 PN 16 ... 400	0JQ	
Connecting standard ASME B16.5		
(1 inch, 1½ inch and 2 inch recommended only for pressure transmitters)		
1 inch class 150 ... 2500	1KX	
1½ inch class 150 ... 2500	1LX	
2 inch class 150 ... 2500	1MX	
2½ inch class 150 ... 2500	1NX	
3 inch class 150 ... 2500	1PX	
4 inch class 150 ... 2500	1QX	
5 inch class 150 ... 2500	1RX	
Connecting standard J.I.S.		
(DN 25, DN 40 and DN 50 recommended only for pressure transmitters)		
DN 25 10K ... 63K	2BW	
DN 40 10K ... 63K	2DW	
DN 50 10K ... 63K	2EW	
DN 65 10K ... 63K	2FW	
DN 80 10K ... 63K	2GW	
DN 100 10K ... 63K	2HW	
DN 125 10K ... 63K	2JW	
Other version Add Order code and plain text	9AA	H1Y
Length of capillary		
1 m	10	
1,6 m	11	
2 m	12	
2,5 m	13	
3 m	14	
4 m	15	
5 m	16	
6 m	17	
7 m	18	
8 m	20	
9 m	21	
10 m	22	

Selection and Ordering data	Article No.	Order code
Diaphragm seal		
Sandwich type design, with flexible capillary tube, connected with flexible capillary tube to a		
• SITRANS P320/P420 transmitter for gauge pressure or absolute pressure (only together with negative pressure service), 7MF03../7MF04.. order separately Scope of delivery: 1 off	7MF0800-	
• SITRANS P320/P420 transmitter for absolute pressure, 7MF03../7MF04.. order separately, Scope of delivery: 1 off	7MF0801-	
• SITRANS P320/P420 transmitter for differential pressure and flow, 7MF03../7MF04.. order separately, Scope of delivery: 2 off	7MF0802-	
	■■■■■■-0■■■	■■■
11 m (only for 7MF0802)	23	
12 m (only for 7MF0802)	24	
13 m (only for 7MF0802)	25	
14 m (only for 7MF0802)	26	
15 m (only for 7MF0802)	27	
Other version Add Order code and plain text	98	L1Y
Filling liquid		
Silicone oil M50	B	
High-temperature oil	C	
Silicone oil M5	A	
Food-grade oil (FDA listed)	E	
Halocarbon oil	D	
Other version Add Order code and plain text	Z	P1Y
Wetted parts materials		
Stainless steel 316L		
• Without coating	A	
• With PFA coating	D	
• With PTFE coating	E0	
• With ECTFE coating	F	
Monel 400, 2.4360	G	
Hastelloy C276, 2.4819	J	
Tantalum	K	
Titanium, 3.7035	L0	
Nickel 201	M0	
Diaphragm Duplex, 1.4462	Q	
Diaphragm plus flange Duplex, 1.4462	R	
Stainless steel 316L with gold coating	S0	
Hastelloy C4, 2.4610	U0	
Hastelloy C22, 2.4602	V0	
Other version Add Order code and plain text	Z8	Q1Y
Extension length		
• without	0	
• 50 mm (2")	1	
• 100 mm (4")	2	
• 150 mm (6")	3	
• 200 mm (8")	4	
• 250 mm (10")	5	
Other version Add Order code and plain text	Z8	Q1Y

© Siemens 2020

Diaphragm seals of sandwich design with flexible capillary

Selection and Ordering data	Article No.	Order code
Diaphragm seal		
Sandwich type design, with flexible capillary tube, connected with flexible capillary tube to a		
• SITRANS P320/P420 transmitter for gauge pressure or absolute pressure (only together with negative pressure service), 7MF03../7MF04.. order separately Scope of delivery: 1 off	7MF0800-	
• SITRANS P320/P420 transmitter for absolute pressure, 7MF03../7MF04.. order separately, Scope of delivery: 1 off	7MF0801-	
• SITRANS P320/P420 transmitter for differential pressure and flow, 7MF03../7MF04.. order separately, Scope of delivery: 2 off	7MF0802-	
	■■■■■-0■■■	■■■
Customer-specific extension length		
• Wetted parts stainless steel without coating		

Range	Standard length	Order code
20 ... 50 mm (0.79 ... 1.97")	50 mm (1.97")	A 1
51 ... 100 mm (2.01 ... 3.94")	100 mm (3.94")	A 2
101 ... 150 mm (3.98 ... 5.91")	150 mm (5.91")	A 3
151 ... 200 mm (5.94 ... 7.87")	200 mm (7.87")	A 4
201 ... 250 mm (7.91 ... 9.84")	250 mm (9.84")	A 5

• Wetted parts stainless steel with ECTFE coating

Range	Standard length	Order code
20 ... 50 mm (0.79 ... 1.97")	50 mm (1.97")	F 1
51 ... 100 mm (2.01 ... 3.94")	100 mm (3.94")	F 2
101 ... 150 mm (3.98 ... 5.91")	150 mm (5.91")	F 3
151 ... 200 mm (5.94 ... 7.87")	200 mm (7.87")	F 4
201 ... 250 mm (7.91 ... 9.84")	250 mm (9.84")	F 5

• Wetted parts stainless steel with PFA coating

Range	Standard length	Order code
20 ... 50 mm (0.79 ... 1.97")	50 mm (1.97")	D 1
51 ... 100 mm (2.01 ... 3.94")	100 mm (3.94")	D 2
101 ... 150 mm (3.98 ... 5.91")	150 mm (5.91")	D 3
151 ... 200 mm (5.94 ... 7.87")	200 mm (7.87")	D 4
201 ... 250 mm (7.91 ... 9.84")	250 mm (9.84")	D 5

• Wetted parts Monel 400

Range	Standard length	Order code
20 ... 50 mm (0.79 ... 1.97")	50 mm (1.97")	G 1
51 ... 100 mm (2.01 ... 3.94")	100 mm (3.94")	G 2
101 ... 150 mm (3.98 ... 5.91")	150 mm (5.91")	G 3
151 ... 200 mm (5.94 ... 7.87")	200 mm (7.87")	G 4

Selection and Ordering data	Article No.	Order code
Diaphragm seal		
Sandwich type design, with flexible capillary tube, connected with flexible capillary tube to a		
• SITRANS P320/P420 transmitter for gauge pressure or absolute pressure (only together with negative pressure service), 7MF03../7MF04.. order separately Scope of delivery: 1 off	7MF0800-	
• SITRANS P320/P420 transmitter for absolute pressure, 7MF03../7MF04.. order separately, Scope of delivery: 1 off	7MF0801-	
• SITRANS P320/P420 transmitter for differential pressure and flow, 7MF03../7MF04.. order separately, Scope of delivery: 2 off	7MF0802-	
	■■■■■-0■■■	■■■

• Wetted parts Hastelloy C276

Range	Standard length	Order code
20 ... 50 mm (0.79 ... 1.97")	50 mm (1.97")	J 1
51 ... 100 mm (2.01 ... 3.94")	100 mm (3.94")	J 2
101 ... 150 mm (3.98 ... 5.91")	150 mm (5.91")	J 3
151 ... 200 mm (5.94 ... 7.87")	200 mm (7.87")	J 4

• Wetted parts Tantalum

Range	Standard length	Order code
20 ... 50 mm (0.79 ... 1.97")	50 mm (1.97")	K 1
51 ... 100 mm (2.01 ... 3.94")	100 mm (3.94")	K 2
101 ... 150 mm (3.98 ... 5.91")	150 mm (5.91")	K 3
151 ... 200 mm (5.94 ... 7.87")	200 mm (7.87")	K 4

© Siemens 2020

Selection and Ordering data	Order code
Further designs	
Add "**-Z**" to Article No. and specify Order code.	
Factory certificates	
Quality inspection certificate (Five-step factory calibration) to IEC 60770-2	**C11**
Inspection certificate to EN 10204-3.1 - material of body and wetted parts	**C12**
Manufacturer's declaration acc. to NACE (MR 0103-2012 and MR 0175-2009) (only together with seal diaphragm made of Hastelloy and stainless steel)	**C13**
Inspection certificate (EN 10204-3.1) - PMI test of pressure containing and wetted parts	**C15**
Certificate of FDA-approved fill oil (to EN10204-2.2)	**C17**
Factory certificate functional safety (SIL2/3), devices suitable for use according to IEC 61508 and IEC 61511 (includes SIL conformity declaration)	**C20**
Accessories	
Spark arrestor (for gauge and absolute pressure transmitters)	**D61**
Spark arrestor (for differential pressure and level transmitters)	**D62**
Low-temperature version (for Silicon Oil M50 only)	**D67**
Negative pressure services	
Negative pressure service (for gauge and absolute pressure transmitters)	**D81**
Negative pressure service (for differential pressure transmitters)	**D83**
Extended negative pressure service (for gauge and absolute pressure transmitters) (only 7MF0800)	**D85**
Extended negative pressure service (for differential pressure transmitters)	**D88**
General product approvals without explosion proof approvals	
Oil-and grease-free cleaned version (for O_2-appl. including certificate EN10204-2.2 (only with fill fluid Halocarbon oil max. temperature 60 °C and max. pressure 50 bar)	**E80**
Oil-and grease-free cleaned version (not for O_2-appl. including certificate EN10204-2.2 (only with fill fluid Halocarbon oil)	**E87**
Sealing surface	
Sealing surface smooth, form B2/EN1092-1 resp. RFSF/ANSI B16.5 (wetted parts 316L only)	**M50**
Sealing surface groove to EN1092-1, form D (instead of sealing surface B1, wetted parts 316L only)	**M54**
Sealing surface RJF (groove) to ASME B16.5 (instead of sealing surface RF 125...250AA, wetted parts 316L only)	**M64**
Sealing surface with tongue to EN1092-1, form C (wetted parts 316L only)	
• DN 25	**M70**
• DN 40	**M71**
• DN 50	**M72**
• DN 80	**M73**
• DN 100	**M74**
• DN 125	**M75**
Sealing surface with spigot to EN1092-1, form E (wetted parts 316L only)	
• DN 25	**M76**
• DN 40	**M77**
• DN 50	**M78**
• DN 80	**M79**
• DN 100	**M80**
• DN 125	**M81**

Selection and Ordering data	Order code
Further designs	
Add "**-Z**" to Article No. and specify Order code.	
Sealing surface with recess to EN1092-1, form F (wetted parts 316L only)	
• DN 25	**M82**
• DN 40	**M83**
• DN 50	**M84**
• DN 80	**M85**
• DN 100	**M86**
• DN 125	**M87**
Capillary connection (only for 7MF0800)	
Single-side mounted at differential pressure transmitters at high-side	**S03**
Single-side mounted at differential pressure transmitters at low-side	**S04**
Capillary coating	
PE protective tube	
1 m	**S10**
1,6 m	**S11**
2 m	**S12**
2,5 m	**S13**
3 m	**S14**
4 m	**S15**
5 m	**S16**
6 m	**S17**
7 m	**S18**
8 m	**S19**
9 m	**S20**
10 m	**S21**
11 m (only for 7MF0802)	**S22**
12 m (only for 7MF0802)	**S23**
13 m (only for 7MF0802)	**S24**
14 m (only for 7MF0802)	**S25**
15 m (only for 7MF0802)	**S26**
PTFE protective tube	
1 m	**S40**
1,6 m	**S41**
2 m	**S42**
2,5 m	**S43**
3 m	**S44**
4 m	**S45**
5 m	**S46**
6 m	**S47**
7 m	**S48**
8 m	**S49**
9 m	**S50**
10 m	**S51**
11 m (only for 7MF0802)	**S52**
12 m (only for 7MF0802)	**S53**
13 m (only for 7MF0802)	**S54**
14 m (only for 7MF0802)	**S55**
15 m (only for 7MF0802)	**S56**

© Siemens 2020

Selection and Ordering data	Order code
Further designs	
Add "**-Z**" to Article No. and specify Order code.	
PVC protective tube	
1 m	**S70**
1,6 m	**S71**
2 m	**S72**
2,5 m	**S73**
3 m	**S74**
4 m	**S75**
5 m	**S76**
6 m	**S77**
7 m	**S78**
8 m	**S79**
9 m	**S80**
10 m	**S81**
11 m (only for 7MF0802)	**S82**
12 m (only for 7MF0802)	**S83**
13 m (only for 7MF0802)	**S84**
14 m (only for 7MF0802)	**S85**
15 m (only for 7MF0802)	**S86**
Customer-specific tube length	
Customer-specific tube length (specify in plain text)	**Y44**
Specification of process conditions[1)]	
Ambient temperature range	
• -10 ... +50 °C (14 ... +122 °F) preset	**D66**
• -40 ... +50 °C (-40 ... +122 °F)	**D67**
• -10 ... +85 °C (14 ... +185 °F)	**D68**
Process temperature min. ... °C/(°F)/max. ... °C/(°F)	**Y50**

1) See also "Specification of process conditions for selection and ordering data", page 1/337.

© Siemens 2020

Dimensional drawings

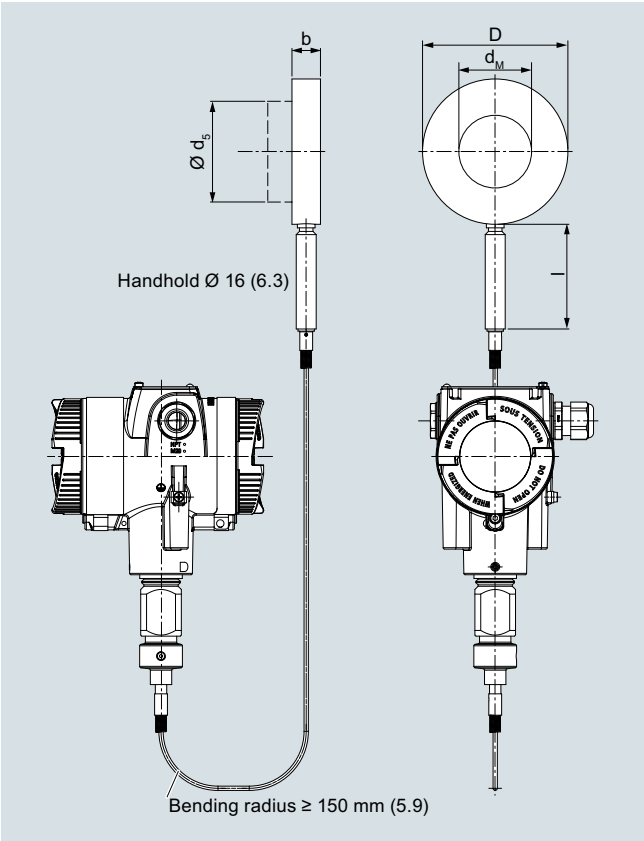

Diaphragm seals of sandwich design with flexible capillary for connection to SITRANS P320/420 pressure transmitters for pressure, dimensions in mm (inch)

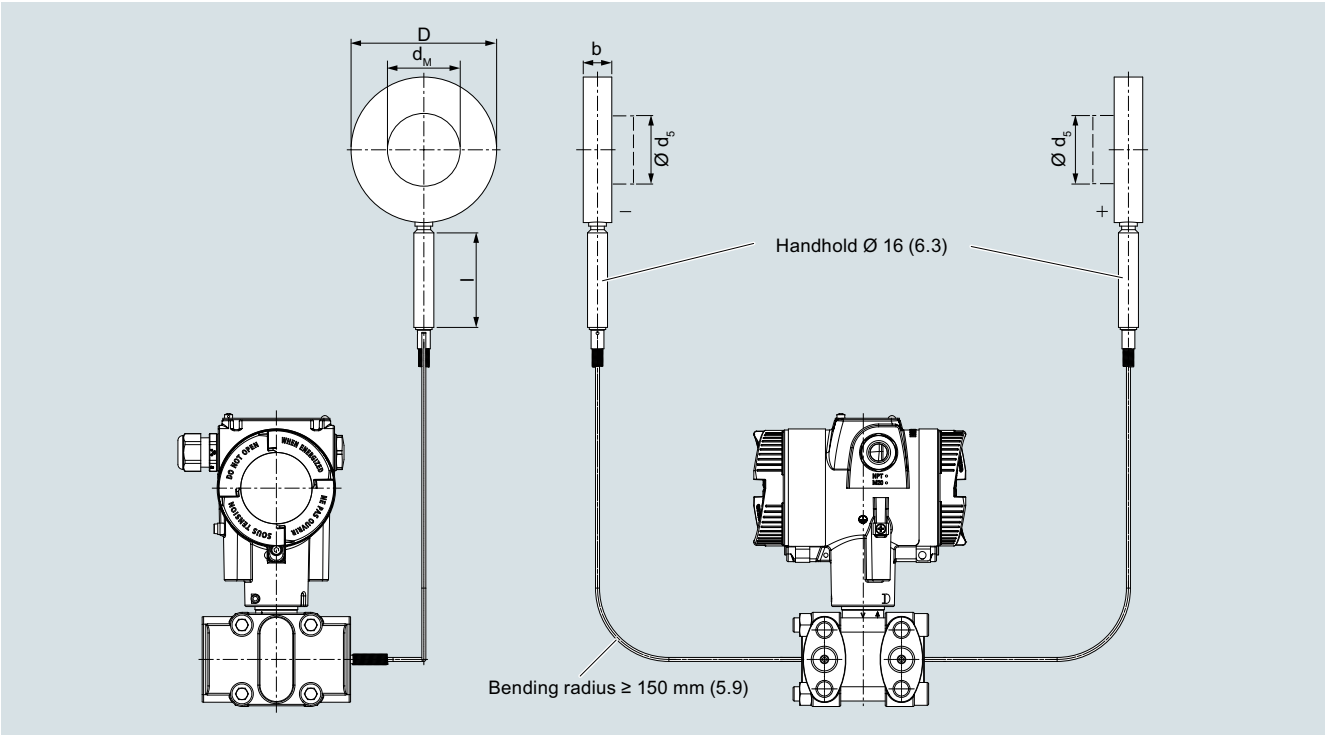

Diaphragm seals of sandwich design (without flange) with flexible capillary for connection to SITRANS P320/420 pressure transmitters for absolute pressure or differential pressure and flow, dimensions in mm (inch)

© Siemens 2020

Connection to EN 1092-1

Nom. diameter	Nom. pressure	b	D	d_5	d_M with tube	d_M w/o tube	l
		mm	mm	mm	mm	mm	mm
DN 25	PN 16 ... PN 400	20	68	24,5	22.6	27	100
DN 40		20	88	38	30	40	100
DN 50		20	102	48.3	40	51	100
DN 65		20	122	48,3	40	65	100
DN 80		20	138	76	65	85	100
DN 100		20	158	94	85	85	100
DN 125		22	188	125	16	116	100

Connection to ASME B16.5

Nom. diameter	Nom. pressure	b	D	d_5	d_M with tube	d_M w/o tube	l
	lb/sq.in.	mm (inch)	mm (inch)	mm (inch)	mm (inch)	mm (inch)	mm (inch)
1 inch	150 ... 2500	20 (0.79)	51 (2.01)	24.5 (0,96)	22.6 (0.89)	30 (1.18)	100 (3.94)
1½ inch		20 (0.79)	73 ()	38 (1.5)	30 (1.18)	40 (1.57)	100 (3.94)
2 inch		20 (0.79)	100 (3.94)	48.3 (1.9)	40 (1.57)	51 (2.01)	100 (3.94)
2½ inch		20 (0.79)	105 (4.13)	48.3 (1.9)	40 (1.57)	65 (2.56)	100 (3.94)
3 inch		20 (0.79)	134 (5.28)	72 (3)	65 (2.56)	85 (3.35)	100 (3.94)
4 inch		20 (0.79)	158 (6.22)	94 (3.69)	85 (3.35)	85 (3.35)	100 (3.94)
5 inch		22 (0.87)	186 (7.32)	125 (4.92)	116 (4.57)	116 (4.57)	100 (3.94)

Connection to J.I.S.

Nom. diameter	Nom. pressure	b	D 10K, 20K	D 30K ... 63K	d_5	d_M with tube	d_M w/o tube	l
		mm (inch)	mm (inch)	mm (inch)	mm (inch)	mm (inch)	mm (inch)	mm (inch)
DN 25	10K ... 63K	20 (0.79)	67 (2.64)	70 (2.76)	24.5 (0.96)	22.6 (0.89)	30 (1.18)	100 (3.94)
DN 40		20 (0.79)	81 (3.19)	90 (3.54)	38 (1.5)	30 (1.18)	36 (1.42)	100 (3.94)
DN 50		20 (0.79)	96 (3.78)	105 (4.13)	48.3 (1.9)	40 (1.57)	51 (2.01)	100 (3.94)
DN 65		20 (0.79)	116 (4.57)	130 (5.12)	48.3 (1.9)	40 (1.57)	65 (2.56)	100 (3.94)
DN 80		20 (0.79)	132 (5.2)	140 (5.51)	76 (2.99)	65 (2.56)	85 (3.35)	100 (3.94)
DN 100		20 (0.79)	160 (6.3)	160 (6.3)	94 (3.69)	85 (3.35)	85 (3.35)	100 (3.94)
DN 125		20 (0.79)	195 (7.68)	195 (7.68)	125 (4.92)	116 (4.57)	116 (4.57)	100 (3.94)

d: Inside diameter of gasket according to EN 1092-1/ASME B16.5

d_M: Effective diaphragm diameter

© Siemens 2020

Overview

Diaphragm seals of flange design

Technical specifications

Diaphragm seals of flange design with flexible capillary	
Nominal diameter	Nominal pressure
Connecting standard EN 1092-1	
• DN 25	PN 10/16/25/40/63/100/160/250
• DN 40	PN 10/16/25/40/63/100/160
• DN 50	PN 10/16/25/40/63/100
• DN 80	PN 10/16/25/40/100
• DN 100	PN 10/16/25/40
• DN 125	PN 16/40
Connecting standard ASME B16.5	
• 1 inch	Class 150/300/600/1500
• 1½ inch	Class 150/300/400/600/900/1500
• 2 inch	Class 150/300/400/600/900/1500
• 3 inch	Class 150/300/600/1500
• 4 inch	Class 150/300/400/1500
• 5 inch	Class 150/300/400
Connecting standard J.I.S.	
• DN 50	10K
• DN 80	20K
• DN 100	40K
Sealing surface	
• For stainless steel, mat. No. 1.4404/316L	To EN 1092-1, form B1 or ASMR B16.5 RF 125 ... 250 AA
• For the other materials	To EN 1092-1, form B2 or ASME B16.5 RFSF

Materials	
• Main body	Stainless steel mat. no. 1.4404/316L
• Wetted parts	Stainless steel mat. no. 1.4404/316L • Without coating • PTFE coating • ECTFE coating (for vacuum on request) • PFA coating Monel 400, mat. No. 2.4360 Hastelloy C276, mat. No. 2.4819 Hastelloy C4, mat. No. 2.4602 Hastelloy C22, W.-Nr. 2.4602 Tantalum Titanium, W.-Nr. 3.7035 Nickel 201 Duplex 2205, mat. no. 1.4462 Stainless steel 316L, gold plated, thickness approx. 25 µm
• Capillary	Stainless steel, mat. No. 1.4571/316Ti
• Sheath	Spiral protective tube made of stainless steel, mat. no. 1.4404/316L
Sealing material in the process flanges	
• For pressure transmitters, absolute pressure transmitters and low-pressure applications	Copper
• For other applications	Viton
Maximum pressure	See above and the technical data of the pressure transmitter
Tube length	Without tube as standard (tube available on request)
Capillary	
• Length	Max. 10 m (32.8 ft), longer lengths on request
• Internal diameter	2 mm (0.079 inch)
• Minimum bending radius	150 mm (5.9 inch)
Filling liquid	
(for remote seals of sandwich and flange design)	Silicone oil M5 Silicone oil M50 High-temperature oil Halocarbon oil (for measuring O_2) Food oil (FDA listed)
Permissible ambient temperature	Dependent on the pressure transmitter and the filling liquid of the remote seal More information can be found in the technical data of the pressure transmitters and in the section "Technical data of filling liquid" in the Technical description to the remote seals
Weight	Approx. 4 kg (8.82 lb)
Certificate and approvals	
Classification according to pressure equipment directive (DGRL 2014/68/EU)	For gases of fluid group 1 and liquids of fluid group 1; complies with requirements of article 4, paragraph 3 (sound engineering practice)

© Siemens 2020

Diaphragm seals of flange design with flexible capillary

Selection and Ordering data	Article No.	Order code
Diaphragm seal		
Flange type design, with flexible capillary tube, connected with flexible capillary tube to a		
• SITRANS P320/P420 transmitter for gauge pressure or absolute pressure (only together with negative pressure service), 7MF03../7MF04.. order separately Scope of delivery: 1 off ↗	7MF0810-	
• SITRANS P320/P420 transmitter for absolute pressure from differential pressure, 7MF03../7MF04.. order separately, Scope of delivery: 1 off ↗	7MF0811-	
• SITRANS P320/P420 transmitter for differential pressure and flow, 7MF03../7MF04.. order separately, Scope of delivery: 2 off ↗	7MF0812-	
	■■■■■-0■■■	■■■
↗ Click on the Article No. for the online configuration in the PIA Life Cycle Portal.		
Nominal diameter / **Nominal pressure**		
Connecting standard EN 1092-1		
(DN 25, DN 40 and DN 50 recommended only for pressure transmitters)		
DN 25 / PN 10/16/25/40	0BD	
PN 63/100	0BF	
PN 160	0BG	
PN 250	0BH	
DN 40 / PN 10/16/25/40	0DD	
PN 63/100	0DF	
PN 160	0DG	
DN 50 / PN 10/16/25/40	0ED	
PN 63	0EE	
PN 100	0EF	
DN 80 / PN 10/16/25/40	0GD	
PN 100	0GF	
DN 100 / PN 10/16	0HB	
PN 25/40	0HD	
DN 125 / PN 16	0JB	
PN 40	0JD	
Connecting standard ASME B16.5		
(1 inch, 1½ inch and 2 inch recommended only for pressure transmitters)		
1 inch / class 150	1KL	
class 300	1KM	
class 600	1KN	
class 1500	1KP	
1½ inch / class 150	1LA	
class 300	1LB	
class 400/600	1LD	
class 900/1500	1LF	
2 inch / class 150	1MA	
class 300	1MB	
class 400/600	1MD	
class 900/1500	1MF	
3 inch / class 150	1PA	
class 300	1PB	
class 600	1PD	
class 1500	1PF	
4 inch / class 150	1QA	
class 300	1QB	
class 400	1QC	
class 1500	1QF	
5 inch / class 150	1RA	
class 300	1RB	
class 400	1RC	

Selection and Ordering data	Article No.	Order code
Diaphragm seal		
Flange type design, with flexible capillary tube, connected with flexible capillary tube to a		
• SITRANS P320/P420 transmitter for gauge pressure or absolute pressure (only together with negative pressure service), 7MF03../7MF04.. order separately Scope of delivery: 1 off	7MF0810-	
• SITRANS P320/P420 transmitter for absolute pressure from differential pressure, 7MF03../7MF04.. order separately, Scope of delivery: 1 off	7MF0811-	
• SITRANS P320/P420 transmitter for differential pressure and flow, 7MF03../7MF04.. order separately, Scope of delivery: 2 off	7MF0812-	
	■■■■■-0■■■	■■■
Connecting standard J.I.S.		
(DN 50 recommended only for pressure transmitters)		
DN 50 / 10 K	2ES	
20 K	2ET	
40 K	2EU	
DN 80 / 10 K	2GS	
20 K	2GT	
40 K	2GU	
DN 100 / 10 K	2HS	
20 K	2HT	
40 K	2HU	
Other version Add Order code and plain text	9AA	H1Y
Transmitter connection		
Connection via capillary tube Length of capillary		
1 m	10	
1,6 m	11	
2 m	12	
2,5 m	13	
3 m	14	
4 m	15	
5 m	16	
6 m	17	
7 m	18	
8 m	20	
9 m	21	
10 m	22	
11 m (only for 7MF0812)	23	
12 m (only for 7MF0812)	24	
13 m (only for 7MF0812)	25	
14 m (only for 7MF0812)	26	
15 m (only for 7MF0812)	27	
Other version Add Order code and plain text	98	L1Y
Filling liquid		
Silicone oil M50	B	
High-temperature oil	C	
Silicone oil M5	A	
Food-grade oil (FDA listed)	E	
Halocarbon oil	D	
Other version Add Order code and plain text	Z	P1Y

© Siemens 2020

Selection and Ordering data	Article No.	Order code
Diaphragm seal		
Flange type design, with flexible capillary tube, connected with flexible capillary tube to a		
• SITRANS P320/P420 transmitter for gauge pressure or absolute pressure (only together with negative pressure service), 7MF03../7MF04.. order separately Scope of delivery: 1 off	7MF0810-	
• SITRANS P320/P420 transmitter for absolute pressure from differential pressure, 7MF03../7MF04.. order separately, Scope of delivery: 1 off	7MF0811-	
• SITRANS P320/P420 transmitter for differential pressure and flow, 7MF03../7MF04.. order separately, Scope of delivery: 2 off	7MF0812-	
	■■■■■-0■■■	■■■
Wetted parts materials		
Stainless steel 316L		
• Without coating	A	
• With PFA coating	D	
• With PTFE coating	E0	
• With ECTFE coating	F	
Monel 400, 2.4360	G	
Hastelloy C276, 2.4819	J	
Tantalum	K	
Titanium, 3.7035	L0	
Nickel 201	M0	
Diaphragm Duplex, 1.4462	Q	
Diaphragm plus flange Duplex, 1.4462	R	
Stainless steel 316L with gold coating	S0	
Hastelloy C4, 2.4610	U0	
Hastelloy C22, 2.4602	V0	
Other version Add Order code and plain text	Z8	Q1Y
Extension length		
• without	0	
• 50 mm (2")	1	
• 100 mm (4")	2	
• 150 mm (6")	3	
• 200 mm (8")	4	
• 250 mm (10")	5	
Other version Add Order code and plain text	Z8	Q1Y
Customer-specific extension length		
• Wetted parts stainless steel without coating		
Range / Standard length		
20 ... 50 mm (0.79 ... 1.97") / 50 mm (1.97")	A1	
51 ... 100 mm (2.01 ... 3.94") / 100 mm (3.94")	A2	
101 ... 150 mm (3.98 ... 5.91") / 150 mm (5.91")	A3	
151 ... 200 mm (5.94 ... 7.87") / 200 mm (7.87")	A4	
201 ... 250 mm (7.91 ... 9.84") / 250 mm (9.84")	A5	

Selection and Ordering data	Article No.	Order code
Diaphragm seal		
Flange type design, with flexible capillary tube, connected with flexible capillary tube to a		
• SITRANS P320/P420 transmitter for gauge pressure or absolute pressure (only together with negative pressure service), 7MF03../7MF04.. order separately Scope of delivery: 1 off	7MF0810-	
• SITRANS P320/P420 transmitter for absolute pressure from differential pressure, 7MF03../7MF04.. order separately, Scope of delivery: 1 off	7MF0811-	
• SITRANS P320/P420 transmitter for differential pressure and flow, 7MF03../7MF04.. order separately, Scope of delivery: 2 off	7MF0812-	
	■■■■■-0■■■	■■■
• Wetted parts stainless steel with ECTFE coating		
Range / Standard length		
20 ... 50 mm (0.79 ... 1.97") / 50 mm (1.97")	F1	
51 ... 100 mm (2.01 ... 3.94") / 100 mm (3.94")	F2	
101 ... 150 mm (3.98 ... 5.91") / 150 mm (5.91")	F3	
151 ... 200 mm (5.94 ... 7.87") / 200 mm (7.87")	F4	
201 ... 250 mm (7.91 ... 9.84") / 250 mm (9.84")	F5	
• Wetted parts stainless steel with PFA coating		
Range / Standard length		
20 ... 50 mm (0.79 ... 1.97") / 50 mm (1.97")	D1	
51 ... 100 mm (2.01 ... 3.94") / 100 mm (3.94")	D2	
101 ... 150 mm (3.98 ... 5.91") / 150 mm (5.91")	D3	
151 ... 200 mm (5.94 ... 7.87") / 200 mm (7.87")	D4	
201 ... 250 mm (7.91 ... 9.84") / 250 mm (9.84")	D5	
• Wetted parts Monel 400		
Range / Standard length		
20 ... 50 mm (0.79 ... 1.97") / 50 mm (1.97")	G1	
51 ... 100 mm (2.01 ... 3.94") / 100 mm (3.94")	G2	
101 ... 150 mm (3.98 ... 5.91") / 150 mm (5.91")	G3	
151 ... 200 mm (5.94 ... 7.87") / 200 mm (7.87")	G4	
• Wetted parts Hastelloy C276		
Range / Standard length		
20 ... 50 mm (0.79 ... 1.97") / 50 mm (1.97")	J1	
51 ... 100 mm (2.01 ... 3.94") / 100 mm (3.94")	J2	
101 ... 150 mm (3.98 ... 5.91") / 150 mm (5.91")	J3	
151 ... 200 mm (5.94 ... 7.87") / 200 mm (7.87")	J4	

© Siemens 2020

Diaphragm seals of flange design with flexible capillary

Selection and Ordering data	Article No.	Order code
Diaphragm seal		
Flange type design, with flexible capillary tube, connected with flexible capillary tube to a		
• SITRANS P320/P420 transmitter for gauge pressure or absolute pressure (only together with negative pressure service), 7MF03../7MF04.. order separately Scope of delivery: 1 off	**7MF0810-**	
• SITRANS P320/P420 transmitter for absolute pressure from differential pressure, 7MF03../7MF04.. order separately, Scope of delivery: 1 off	**7MF0811-**	
• SITRANS P320/P420 transmitter for differential pressure and flow, 7MF03../7MF04.. order separately, Scope of delivery: 2 off	**7MF0812-**	
	■■■■■ **-0** ■■■	■■■
• Wetted parts Tantalum		

Range	Standard length	
20 ... 50 mm (0.79 ... 1.97")	50 mm (1.97")	**K 1**
51 ... 100 mm (2.01 ... 3.94")	100 mm (3.94")	**K 2**
101 ... 150 mm (3.98 ... 5.91")	150 mm (5.91")	**K 3**
151 ... 200 mm (5.94 ... 7.87")	200 mm (7.87")	**K 4**

Selection and Ordering data	Order code
Further designs	
Add "**-Z**" to Article No. and specify Order code.	
Factory certificates	
Quality inspection certificate (Five-step factory calibration) to IEC 60770-2	**C11**
Inspection certificate to EN 10204-3.1 - material of body and wetted parts	**C12**
Manufacturer's declaration acc. to NACE (MR 0103-2012 and MR 0175-2009) (only together with seal diaphragm made of Hastelloy and stainless steel)	**C13**
Inspection certificate (EN 10204-3.1) - PMI test of pressure containing and wetted parts	**C15**
Certificate of FDA-approved fill oil (to EN10204-2.2)	**C17**
Factory certificate functional safety (SIL2/3), devices suitable for use according to IEC 61508 and IEC 61511 (includes SIL conformity declaration)	**C20**
Accessories	
Spark arrestor (for gauge and absolute pressure transmitters)	**D61**
Spark arrestor (for differential pressure and flow transmitters)	**D62**
Low-temperature version (for Silicon Oil M50 only)	**D67**
Negative pressure services	
Negative pressure service (for gauge and absolute pressure transmitters) (only for 7MF0810)	**D81**
Negative pressure service (for differential pressure transmitters)	**D83**
Extended negative pressure service (for gauge and absolute pressure transmitters) (only for 7MF0810)	**D85**
Extended negative pressure service (for differential pressure transmitters)	**D88**
General product approvals without explosion proof approvals	
Oil-and grease-free cleaned version (for O_2-appl. including certificate EN10204-2.2 (only with fill fluid Halocarbon oil max. temperature 60 °C and max. pressure 50 bar)	**E80**
Oil-and grease-free cleaned version (not for O_2-appl. including certificate EN10204-2.2 (only with fill fluid Halocarbon oil)	**E87**
Sealing surface	
Sealing surface smooth, form B2/EN1092-1 resp. RFSF/ANSI B16.5 (wetted parts 316L only)	**M50**
Sealing surface groove to EN1092-1, form D (instead of sealing surface B1, wetted parts 316L only)	**M54**
Sealing surface RJF (groove) to ASME B16.5 (instead of sealing surface RF 125...250AA, wetted parts 316L only)	**M64**
Sealing surface with tongue to EN1092-1, form C (wetted parts 316L only)	
• DN 25	**M70**
• DN 40	**M71**
• DN 50	**M72**
• DN 80	**M73**
• DN 100	**M74**
• DN 125	**M75**
Sealing surface with spigot to EN1092-1, form E (wetted parts 316L only)	
• DN 25	**M76**
• DN 40	**M77**
• DN 50	**M78**
• DN 80	**M79**
• DN 100	**M80**
• DN 125	**M81**

© Siemens 2020

Selection and Ordering data	Order code
Further designs	
Add "**-Z**" to Article No. and specify Order code.	
Sealing surface with recess to EN1092-1, form F (wetted parts 316L only)	
• DN 25	**M82**
• DN 40	**M83**
• DN 50	**M84**
• DN 80	**M85**
• DN 100	**M86**
• DN 125	**M87**
Capillary connection	
For 7MF0810	
Radial capillary pipe outlet (for single-side mounting and capillary connection only)	**S01**
Single-side mounted at differential pressure transmitters at high-side	**S03**
Single-side mounted at differential pressure transmitters at low-side	**S04**
For 7MF0811	
Radial capillary pipe outlet (for single-side mounting and capillary connection only)	**S01**
For 7MF0812	
Radial capillary pipe outlet (for double-side mounting)	**S02**
Capillary coating	
PE protective tube	
1 m	**S10**
1,6 m	**S11**
2 m	**S12**
2,5 m	**S13**
3 m	**S14**
4 m	**S15**
5 m	**S16**
6 m	**S17**
7 m	**S18**
8 m	**S19**
9 m	**S20**
10 m	**S21**
11 m (only for 7MF0802)	**S22**
12 m (only for 7MF0802)	**S23**
13 m (only for 7MF0802)	**S24**
14 m (only for 7MF0802)	**S25**
15 m (only for 7MF0802)	**S26**
PTFE protective tube	
1 m	**S40**
1,6 m	**S41**
2 m	**S42**
2,5 m	**S43**
3 m	**S44**
4 m	**S45**
5 m	**S46**
6 m	**S47**
7 m	**S48**
8 m	**S49**
9 m	**S50**
10 m	**S51**
11 m (only for 7MF0802)	**S52**
12 m (only for 7MF0802)	**S53**
13 m (only for 7MF0802)	**S54**
14 m (only for 7MF0802)	**S55**
15 m (only for 7MF0802)	**S56**

Selection and Ordering data	Order code
Further designs	
Add "**-Z**" to Article No. and specify Order code.	
PVC protective tube	
1 m	**S70**
1,6 m	**S71**
2 m	**S72**
2,5 m	**S73**
3 m	**S74**
4 m	**S75**
5 m	**S76**
6 m	**S77**
7 m	**S78**
8 m	**S79**
9 m	**S80**
10 m	**S81**
11 m (only for 7MF0802)	**S82**
12 m (only for 7MF0802)	**S83**
13 m (only for 7MF0802)	**S84**
14 m (only for 7MF0802)	**S85**
15 m (only for 7MF0802)	**S86**
Customer-specific tube length	
Customer-specific tube length (specify in plain text)	**Y44**
Specification of process conditions[1)]	
Ambient temperature range	
• -10 ... +50 °C (14 ... +122 °F) preset	**D66**
• -40 ... +50 °C (-40 ... +122 °F)	**D67**
• -10 ... +85 °C (14 ... +185 °F)	**D68**
Process temperature min. ... °C/(°F)/max. ... °C/(°F)	**Y50**

1) See also "Specification of process conditions for selection and ordering data", page 1/337.

© Siemens 2020

Dimensional drawings

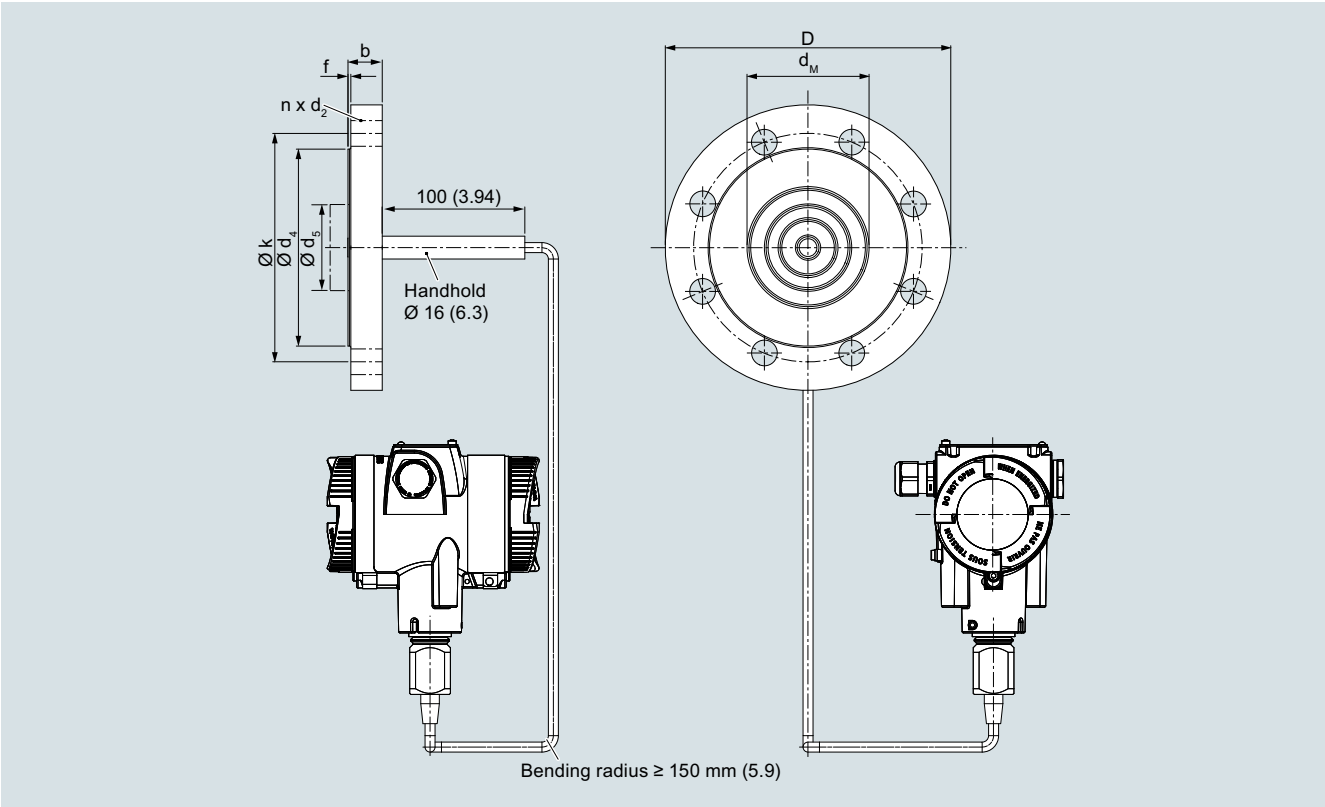

Diaphragm seals of flange design with flexible capillary for connection to SITRANS P320/420 pressure transmitters for pressure, dimensions in mm (inch)

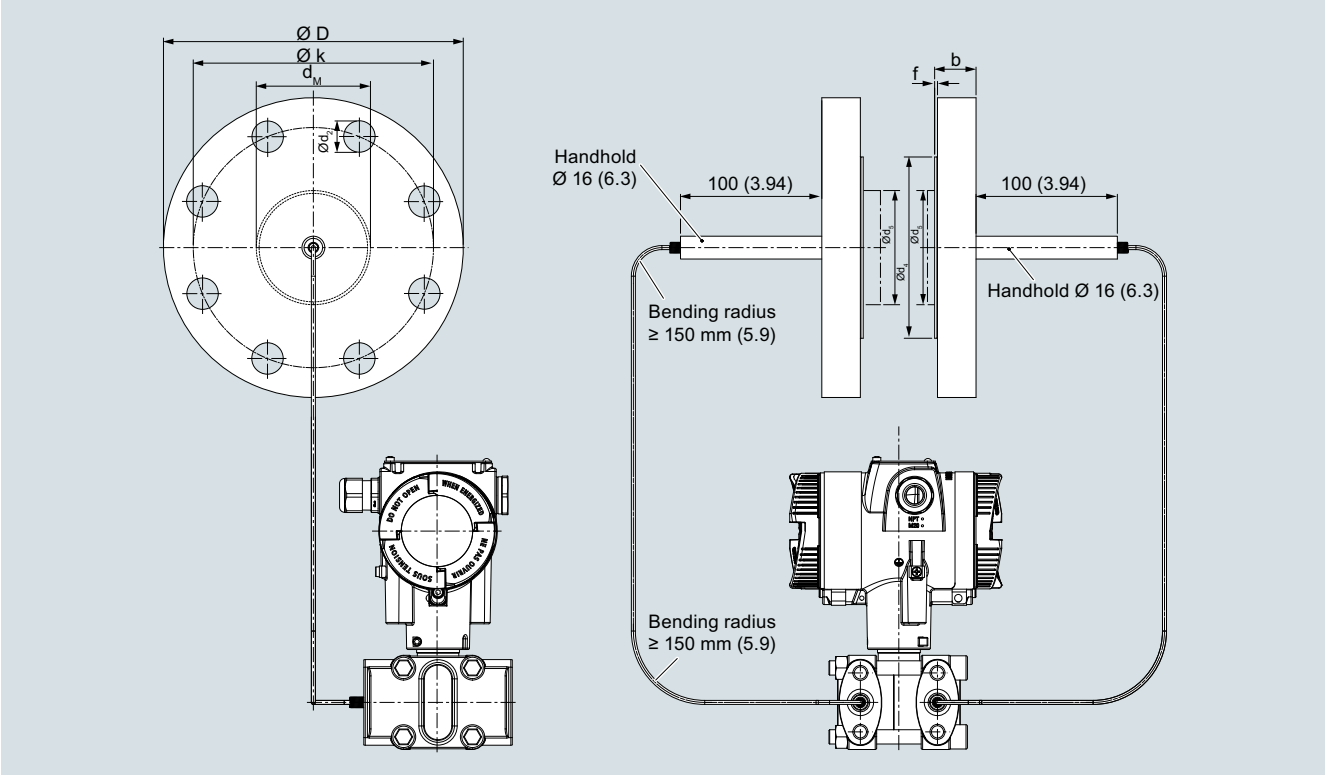

Diaphragm seals of flange design with flexible capillary for connection to SITRANS P320/420 pressure transmitters for absolute pressure or for differential pressure and flow, dimensions in mm (inch)

© Siemens 2020

Connection to EN 1092-1

Nominal diameter	Nominal pressure	b	D	d_2	d_4	d_5	d_M with extension	d_M without extension	f	k	n	L
		mm	mm	mm	mm	mm	mm	mm	mm	mm	mm	mm
DN 25	PN 10/16/ 25/40	18	115	14	68	24.5	22.6	27	2	85	4	0, 50, 100, 150 oder 200
	PN 63/100	24	140	18	68	24.5	22.6	27	2	100	4	0, 50, 100, 150 oder 200
	PN 160	24	140	18	68	24.5	22.6	27	2	100	4	
	PN 250	28	150	22	68	24.5	22.6	27	2	105	4	
DN 40	PN 10/16/ 25/40	16	150	18	88	38	30	42	2	110	4	
	PN 63/100	24	170	22	88	38	30	42	2	125	4	
	PN 160	26	170	22	88	38	30	42	2	125	4	
DN 50	PN 10/16/ 25/40	18	165	18	102	48.3	40	51	2	125	4	
	PN 63/100	26	195	26	102	48.3	40	51	2	145	4	
	PN 160	28	195	26	102	48.3	40	51	2	145	4	
DN 80	PN 10/16/ 25/40	22	200	18	138	76	65	85	2	160	8	
	PN 100	30	230	26	138	76	65	85	2	180	8	
DN 100	PN 10/16	18	220	18	158	94	85	85	2	180	8	
	PN 25/40	22	235	22	162	94	85	85	2	190	8	
DN 125	PN 16	20	250	18	188	127	85	116	2	210	8	
	PN 40	24	270	26	188	127	85	116	2	220	8	

Connection to ASME B16.5

Nominal diameter	Nominal pressure	b	D	d_2	d_4	d_5	d_M with extension	d_M without extension	f	k	n	L
	lb./sq.in	inch (mm)	inch (mm)	inch (mm)	inch (mm)	inch (mm)	inch (mm)	inch (mm)	inch (mm)	inch (mm)		inch (mm
1 inch	150	0.71 (18)	4.33 (110)	0.61 (15.6)	2 (50.8)	0.96 (24.5)	0.89 (22.6)	1.18 (30)	0.08 (2)	3.13 (79.4)	4	0, 2, 3.94, 5.94 oder 7.87 (0, 50, 100, 150 oder 200)
	300	0.77 (19.5)	4.92 (125)	0.75 (19.1)	2 (50.8)	0.96 (24.5)	0.89 (22.6)	1.18 (30)	0.08 (2)	3.5 (88.9)	4	
	600	0.96 (24.5)	4.92 (125)	0.75 (19.1)	2 (50.8)	0.96 (24.5)	0.89 (22.6)	1.18 (30)	0.28 (7)	3.5 (88.9)	4	
	1500	1.4 (35.6)	5.91 (150)	1 (25.4)	2 (50.8)	0.96 (24.5)	0.89 (22.6)	1.18 (30)	0.28 (7)	4 (101.6)	4	
1½ inch	150	0.63 (15.9)	4.92 (125)	0.63 (15.9)	2.87 (73)	1.5 (38)	1.18 (30)	1.42 (36)	0.08 (2)	3.87 (98.4)	4	
	300	0.75 (19.1)	6.10 (155)	0.87 (22.2)	2.87 (73)	1.5 (38)	1.18 (30)	1.42 (36)	0.08 (2)	4.5 (114.3)	4	
	400/600	0.88 (22.3)	6.10 (155)	0.87 (22.2)	2.87 (73)	1.5 (38)	1.18 (30)	1.42 (36)	0.28 (7)	4.5 (114.3)	4	
	900/1500	1.25 (31.8)	7.09 (180)	1.13 (28.6)	2.87 (73)	1.5 (38)	1.18 (30)	1.42 (36)	0.28 (7)	4.87 (123.8)	4	
2 inch	150	0.69 (17.5)	5.91 (150)	0.75 (19.1)	3.63 (92.1)	1.9 (48.3)	1.57 (40)	2.01 (51)	0.08 (2)	4.75 (120.7)	4	
	300	0.81 (20.7)	6.5 (165)	0.75 (19.1)	3.63 (92.1)	1.9 (48.3)	1.57 (40)	2.01 (51)	0.08 (2)	5 (127)	8	
	400/600	1.00 (25.4)	6.5 (165)	0.75 (19.1)	3.63 (92.1)	1.9 (48.3)	1.57 (40)	2.01 (51)	0.28 (7)	5 (127)	8	
	900/1500	1.5 (38.1)	8.46 (215)	1.00 (25.4)	3.63 (92.1)	1.9 (48.3)	1.57 (40)	2.01 (51)	0.28 (7)	6.5 (165.1)	8	
3 inch	150	0.88 (22.3)	7.48 (190)	0.75 (19.1)	5 (127)	3 (76)	2.65 (65)	3.35 (85)	0.08 (2)	6 (152.4)	4	
	300	1.06 (27)	8.27 (210)	0.87 (22.2)	5 (127)	3 (76)	2.65 (65)	3.35 (85)	0.08 (2)	6.63 (168.3)	8	
	600	1.23 (31.8)	8.27 (210)	0.87 (22.2)	5 (127)	3 (76)	2.65 (65)	3.35 (85)	0.28 (7)	6.63 (168.3)	8	
	1500	1.88 (47.7)	10.43 (265)	1.25 (31.8)	5 (127)	3 (76)	2.65 (65)	3.35 (85)	0.28 (7)	8 (203.2)	8	
4 inch	150	0.88 (22.3)	9.06 (230)	0.75 (19.1)	6.19 (157.2)	3.69 (94)	3.35 (85)	3.35 (85)	0.08 (2)	7.5 (190.5)	8	
	300	1.19 (30.2)	10.04 (255)	0.87 (22.2)	6.19 (157.2)	3.69 (94)	3.35 (85)	3.35 (85)	0.08 (2)	7.87 (200)	8	
	400	1.38 (35)	10.04 (255)	0.87 (22.2)	6.19 (157.2)	3.69 (94)	3.35 (85)	3.35 (85)	0.28 (7)	7.87 (200)	8	
	1500	2.13 (54)	12.20 (310)	1.37 (34.9)	6.19 (157.2)	3.69 (94)	3.35 (85)	3.35 (85)	0.28 (7)	9.5 (241.3)	8	
5 inch	150	0.88 (22.3)	10.04 (255)	0.87 (22.2)	7.31 (185.7)	5 (127)	4.57 (116)	4.57 (116)	0.08 (2)	8.5 (215.9)	8	
	300	1.31 (33.4)	11.02 (280)	0.87 (22.2)	7.31 (185.7)	5 (127)	4.57 (116)	4.57 (116)	0.08 (2)	9.25 (235)	8	
	400	1.50 (38.1)	11.02 (280)	0.87 (22.2)	7.31 (185.7)	5 (127)	4.57 (116)	4.57 (116)	0.28 (7)	9.25 (235)	8	

© Siemens 2020

Diaphragm seals of flange design with flexible capillary

Connection to J.I.S

Nominal diameter	Nominal pressure	b	D	d_2	d_4	d_5	d_M with extension	d_M without extension	f	k	n	L
		mm (inch)	mm (inch)	mm (inch)	mm (inch)	mm (inch)	mm (inch)	mm (inch)	mm (inch)	mm (inch)		mm (inch)
DN 50	10K	14 (0.55)	155 (6.10)	19 (0.75)	96 (3.78)	48.3 (1.9)	40 (1.57)	51 (2.01)	2	120 (4.72)	4	0, 50, 100, 150 oder 200 (0, 2, 3.94, 5.94 oder 7.87)
	20K	16 (0,63)	165 (6.50)	19 (0.75)	96 (3.78)	48.3 (1.9)	40 (1.57)	51 (2.01)	2	120 (4.72)	8	
	40K	26 (1.02)	165 (6.50)	19 (0.75)	105 (4.13)	48.3 (1.9)	40 (1.57)	51 (2.01)	2	130 (5.12)	8	
DN 80	10K	16 (0.63)	185 (7.28)	19 (0.75)	126 (4.96)	76 (2.99)	65 (2.56)	85 (3.35)	2	150 (5.91)	8	
	20K	20 (0.79)	200 (7.87)	23 (0.91)	132 (5.20)	76 (2.99)	65 (2.56)	85 (3.35)	2	160 (6.30)	8	
	40K	32 (1.26)	210 (8.27)	23 (0.91)	140 (5.51)	76 (2.99)	65 (2.56)	85 (3.35)	2	170 (6.30)	8	
DN 100	10K	16 (0.63)	210 (8.27)	19 (0.75)	151 (5.94)	94 (3.7)	85 (3.35)	85 (3.35)	2	175 (6.89)	8	
	20K	22 (0.87)	225 (8.86)	23 (0.91)	160 (6.30)	94 (3.7)	85 (3.35)	85 (3.35)	2	185 (7.28)	8	
	40K	36 (1.42)	250 (9.84)	25 (0.98)	165 (6.50)	94 (3.7)	85 (3.35)	85 (3.35)	2	205 (8.07)	8	

d: Internal diameter of gasket to DIN 2690
d_M: Effective diaphragm diameter

© Siemens 2020

Overview

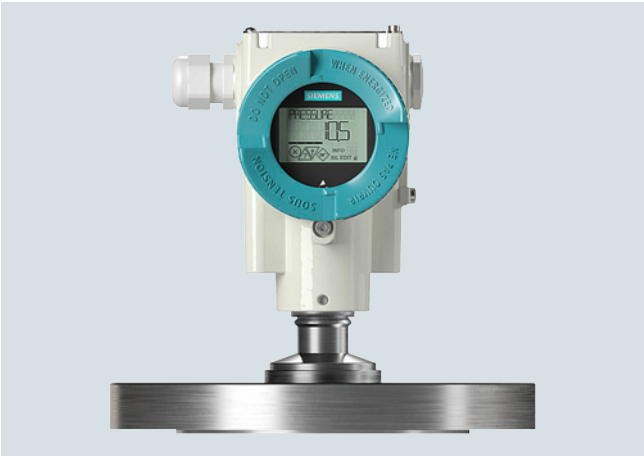

Diaphragm seals of flange design, directly fitted on a pressure transmitter for pressure

Technical specifications

Diaphragm seals (flange design) for pressure and absolute pressure, directly fitted on a transmitter	
Nominal diameter	Nominal pressure
Connecting standard EN 1092-1	
• DN 25	PN 10/16/25/40/63/100/160/250
• DN 40	PN 10/16/25/40/63/100/160
• DN 50	PN 10/16/25/40/63/100
• DN 80	PN 10/16/25/40/100
• DN 100	PN 10/16/25/40
• DN 125	PN 16/40
Connecting standard ASME B16.5	
• 1 inch	Class 150/300/600/1500
• 1½ inch	Class 150/300/400/600/900/1500
• 2 inch	Class 150/300/400/600/900/1500
• 3 inch	Class 150/300/600/1500
• 4 inch	Class 150/300/400/1500
• 5 inch	Class 150/300/400
Connecting standard J.I.S.	
• DN 50	10K
• DN 80	20K
• DN 100	40K
Sealing surface	
• For stainless steel, mat. No. 1.4404/316L	To EN 1092-1, form B1 or ASME B16.5 RF 125 ... 250 AA
• For the other materials	Smooth to EN 1092-1, form B2 or ASME B16.5 RFSF

Materials	
• Main body	Stainless steel, 1.4404/316L
• Wetted parts	Stainless steel, 1.4404/316L • Without coating • PTFE coating • ECTFE coating (for vacuum on request) • PFA coating Monel 400, mat. No. 2.4360 Hastelloy C276, mat. No. 2.4819 Hastelloy C4, mat. No. 2.4602 Hastelloy C22, mat No. 2.4602 Tantalum Titanium, mat. No. 3.7035 Nickel 201 Duplex 2205, mat. no. 1.4462 Stainless steel 316L, gold plated, thickness approx. 25 µm
• Capillary	Stainless steel, 1.4404/316L
• Sealing material at the transmitter connection	Copper
Maximum pressure	See above and the technical data of the transmitter
Tube length	• Without tube • 50 mm (1.97 inch) • 100 mm (3.94 inch) • 150 mm (5.91 inch) • 200 mm (7.87 inch)
Capillary	
• Length	Max. 10 m (32.8 ft), longer lengths on request
• Internal diameter	2 mm (0.079 inch)
• Minimum bending radius	150 mm (5.9 inch)
Filling liquid	• Silicone oil M5 • Silicone oil M50 • High-temperature oil • Halocarbon oil (for measuring O_2) • Food oil (FDA listed)
Max. recommended temperature of medium	170 °C (338 °F)
Permissible ambient temperature	Dependent on the pressure transmitter and the filling liquid of the remote seal. More information can be found in the technical data of the pressure transmitters and in the section "Technical data of filling liquid" in the Technical description to the remote seals.
Weight	Approx. 4 kg (8.82 lb)
Certificate and approvals	
Classification according to pressure equipment directive (DGRL 2014/68/EU)	For gases of fluid group 1 and liquids of fluid group 1; complies with requirements of article 4, paragraph 3 (sound engineering practice)

© Siemens 2020

Diaphragm seals of flange design mounted directly on transmitter

Selection and Ordering data		Article No.	Order code
Diaphragm seal			
Flange type design, directly mounted to a			
• SITRANS P320/P420 transmitter for gauge pressure or absolute pressure (only together with negative pressure service), 7MF03../7MF04.. order separately Scope of delivery: 1 off		7MF0810-	
		■■■■■-0■■■	■■■
↗ Click on the Article No. for the online configuration in the PIA Life Cycle Portal.			
Nominal diameter	**Nominal pressure**		
Connecting standard EN 1092-1			
DN 25	PN 10/16/25/40	0BD	
	PN 63/100	0BF	
	PN 160	0BG	
	PN 250	0BH	
DN 40	PN 10/16/25/40	0DD	
	PN 63/100	0DF	
	PN 160	0DG	
DN 50	PN 10/16/25/40	0ED	
	PN 63	0EE	
	PN 100	0EF	
DN 80	PN 10/16/25/40	0GD	
	PN 100	0GF	
DN 100	PN 10/16	0HB	
	PN 25/40	0HD	
DN 125	PN 16	0JB	
	PN 40	0JD	
Connecting standard ASME B16.5			
1 inch	class 150	1KL	
	class 300	1KM	
	class 600	1KN	
	class 1500	1KP	
1½ inch	class 150	1LA	
	class 300	1LB	
	class 400/600	1LD	
	class 900/1500	1LF	
2 inch	class 150	1MA	
	class 300	1MB	
	class 400/600	1MD	
	class 900/1500	1MF	
3 inch	class 150	1PA	
	class 300	1PB	
	class 600	1PD	
	class 1500	1PF	
4 inch	class 150	1QA	
	class 300	1QB	
	class 400	1QC	
	class 1500	1QF	
5 inch	class 150	1RA	
	class 300	1RB	
	class 400	1RC	
Connecting standard J.I.S.			
DN 50	10K	2ES	
	20K	2ET	
	40K	2EU	
DN 80	10K	2GS	
	20K	2GT	
	40K	2GU	
DN 100	10K	2HS	
	20K	2HT	
	40K	2HU	
Other version Add Order code and plain text		9AA	H1Y

Selection and Ordering data	Article No.	Order code
Diaphragm seal		
Flange type design, directly mounted to a		
• SITRANS P320/P420 transmitter for gauge pressure or absolute pressure (only together with negative pressure service), 7MF03../7MF04.. order separately Scope of delivery: 1 off	7MF0810-	
	■■■■■-0■■■	■■■
Transmitter connection		
Without capillary tube, direct mount straight connection (for gauge pressure)	00	
Without capillary tube, direct mount connection via 90°-bow (for gauge pressure)	01	
Filling liquid		
Silicone oil M50	B	
High-temperature oil	C	
Silicone oil M5	A	
Food-grade oil (FDA listed)	E	
Halocarbon oil	D	
Other version Add Order code and plain text	Z	P1Y
Wetted parts materials		
Stainless steel 316L		
• Without coating	A	
• With PFA coating	D	
• With PTFE coating	E0	
• With ECTFE coating	F	
Monel 400, 2.4360	G	
Hastelloy C276, 2.4819	J	
Tantalum	K	
Titanium, 3.7035	L0	
Nickel 201	M0	
Diaphragm Duplex, 1.4462	Q	
Diaphragm plus flange Duplex, 1.4462	R	
Stainless steel 316L with gold coating	S0	
Hastelloy C4, 2.4610	U0	
Hastelloy C22, 2.4602	V0	
Other version Add Order code and plain text	Z8	Q1Y
Extension length		
• without	0	
• 50 mm (2")	1	
• 100 mm (4")	2	
• 150 mm (6")	3	
• 200 mm (8")	4	
• 250 mm (10")	5	
Other version Add Order code and plain text	Z8	Q1Y

© Siemens 2020

Selection and Ordering data	Article No.	Order code
Diaphragm seal		
Flange type design, directly mounted to a		
• SITRANS P320/P420 transmitter for gauge pressure or absolute pressure (only together with negative pressure service), 7MF03../7MF04.. order separately Scope of delivery: 1 off	**7MF0810-**	
	■■■■■ - 0 ■■■	■■■
Customer-specific extension length		
• Wetted parts stainless steel without coating		
Range / Standard length		
20 ... 50 mm (0.79 ... 1.97") / 50 mm (1.97")		**A 1**
51 ... 100 mm (2.01 ... 3.94") / 100 mm (3.94")		**A 2**
101 ... 150 mm (3.98 ... 5.91") / 150 mm (5.91")		**A 3**
151 ... 200 mm (5.94 ... 7.87") / 200 mm (7.87")		**A 4**
201 ... 250 mm (7.91 ... 9.84") / 250 mm (9.84")		**A 5**
• Wetted parts stainless steel with ECTFE coating		
Range / Standard length		
20 ... 50 mm (0.79 ... 1.97") / 50 mm (1.97")		**F 1**
51 ... 100 mm (2.01 ... 3.94") / 100 mm (3.94")		**F 2**
101 ... 150 mm (3.98 ... 5.91") / 150 mm (5.91")		**F 3**
151 ... 200 mm (5.94 ... 7.87") / 200 mm (7.87")		**F 4**
201 ... 250 mm (7.91 ... 9.84") / 250 mm (9.84")		**F 5**
• Wetted parts stainless steel with PFA coating		
Range / Standard length		
20 ... 50 mm (0.79 ... 1.97") / 50 mm (1.97")		**D 1**
51 ... 100 mm (2.01 ... 3.94") / 100 mm (3.94")		**D 2**
101 ... 150 mm (3.98 ... 5.91") / 150 mm (5.91")		**D 3**
151 ... 200 mm (5.94 ... 7.87") / 200 mm (7.87")		**D 4**
201 ... 250 mm (7.91 ... 9.84") / 250 mm (9.84")		**D 5**
• Wetted parts Monel 400		
Range / Standard length		
20 ... 50 mm (0.79 ... 1.97") / 50 mm (1.97")		**G 1**
51 ... 100 mm (2.01 ... 3.94") / 100 mm (3.94")		**G 2**
101 ... 150 mm (3.98 ... 5.91") / 150 mm (5.91")		**G 3**
151 ... 200 mm (5.94 ... 7.87") / 200 mm (7.87")		**G 4**

Selection and Ordering data	Article No.	Order code
Diaphragm seal		
Flange type design, directly mounted to a		
• SITRANS P320/P420 transmitter for gauge pressure or absolute pressure (only together with negative pressure service), 7MF03../7MF04.. order separately Scope of delivery: 1 off	**7MF0810-**	
	■■■■■ - 0 ■■■	■■■
• Wetted parts Hastelloy C276		
Range / Standard length		
20 ... 50 mm (0.79 ... 1.97") / 50 mm (1.97")		**J 1**
51 ... 100 mm (2.01 ... 3.94") / 100 mm (3.94")		**J 2**
101 ... 150 mm (3.98 ... 5.91") / 150 mm (5.91")		**J 3**
151 ... 200 mm (5.94 ... 7.87") / 200 mm (7.87")		**J 4**
• Wetted parts Tantalum		
Range / Standard length		
20 ... 50 mm (0.79 ... 1.97") / 50 mm (1.97")		**K 1**
51 ... 100 mm (2.01 ... 3.94") / 100 mm (3.94")		**K 2**
101 ... 150 mm (3.98 ... 5.91") / 150 mm (5.91")		**K 3**
151 ... 200 mm (5.94 ... 7.87") / 200 mm (7.87")		**K 4**

© Siemens 2020

Diaphragm seals of flange design mounted directly on transmitter

Selection and Ordering data	Order code
Further designs	
Add "**-Z**" to Article No. and specify Order code.	
Factory certificates	
Quality inspection certificate (Five-step factory calibration) to IEC 60770-2	**C11**
Inspection certificate to EN 10204-3.1 - material of body and wetted parts	**C12**
Manufacturer's declaration acc. to NACE (MR 0103-2012 and MR 0175-2009) (only together with seal diaphragm made of Hastelloy and stainless steel)	**C13**
Inspection certificate (EN 10204-3.1) - PMI test of pressure containing and wetted parts	**C15**
Certificate of FDA-approved fill oil (to EN10204-2.2)	**C17**
Factory certificate functional safety (SIL2/3), devices suitable for use according to IEC 61508 and IEC 61511 (includes SIL conformity declaration)	**C20**
Accessories	
Spark arrestor (for gauge and absolute pressure transmitters)	**D61**
Low-temperature version (for Silicon Oil M50 only)	**D67**
Negative pressure services	
Negative pressure service (for gauge and absolute pressure transmitters)	**D81**
Extended negative pressure service (for gauge and absolute pressure transmitters) (only for 7MF0810)	**D85**
General product approvals without explosion proof approvals	
Oil-and grease-free cleaned version (for O_2-appl. including certificate EN10204-2.2 (only with fill fluid Halocarbon oil max. temperature 60 °C and max. pressure 50 bar)	**E80**
Oil-and grease-free cleaned version (not for O_2-appl. including certificate EN10204-2.2 (only with fill fluid Halocarbon oil)	**E87**
Sealing surface	
Sealing surface smooth, form B2/EN1092-1 resp. RFSF/ANSI B16.5 (wetted parts 316L only)	**M50**
Sealing surface groove to EN1092-1, form D (instead of sealing surface B1, wetted parts 316L only)	**M54**
Sealing surface RJF (groove) to ASME B16.5 (instead of sealing surface RF 125...250AA, wetted parts 316L only)	**M64**
Sealing surface with tongue to EN1092-1, form C (wetted parts 316L only)	
• DN 25	**M70**
• DN 40	**M71**
• DN 50	**M72**
• DN 80	**M73**
• DN 100	**M74**
• DN 125	**M75**
Sealing surface with spigot to EN1092-1, form E (wetted parts 316L only)	
• DN 25	**M76**
• DN 40	**M77**
• DN 50	**M78**
• DN 80	**M79**
• DN 100	**M80**
• DN 125	**M81**

Selection and Ordering data	Order code
Further designs	
Add "**-Z**" to Article No. and specify Order code.	
Sealing surface with recess to EN1092-1, form F (wetted parts 316L only)	
• DN 25	**M82**
• DN 40	**M83**
• DN 50	**M84**
• DN 80	**M85**
• DN 100	**M86**
• DN 125	**M87**
Capillary connection	
Elongated pipe, 150 mm instead of 100 mm, max. medium temperature 300 °C (572 °F), observe the max. permissible media temperature of the fill liquid.	**S05**
Elongated pipe, 200 mm instead of 100 mm, max. medium temperature 300 °C (572 °F), observe the max. permissible media temperature of the fill liquid.	**S06**
Elongated pipe elbow, 200 mm instead of 130 mm, max. medium temperature 300 °C (572 °F), observe the max. permissible media temperature of the fill liquid.	**S07**
Cooling element, max. medium temperature 300 °C (572 °F), observe the max. permissible media temperature of the fill liquid.	**S08**
Customer-specific tube length	
Customer-specific tube length (specify in plain text)	**Y44**
Specification of process conditions[1)]	
Ambient temperature range	
• -10 ... +50 °C (14 ... +122 °F) preset	**D66**
• -40 ... +50 °C (-40 ... +122 °F)	**D67**
• -10 ... +85 °C (14 ... +185 °F)	**D68**
Process temperature min. ... °C/(°F)/max. ... °C/(°F)	**Y50**

1) See also "Specification of process conditions for selection and ordering data", page 1/337.

© Siemens 2020

Dimensional drawings

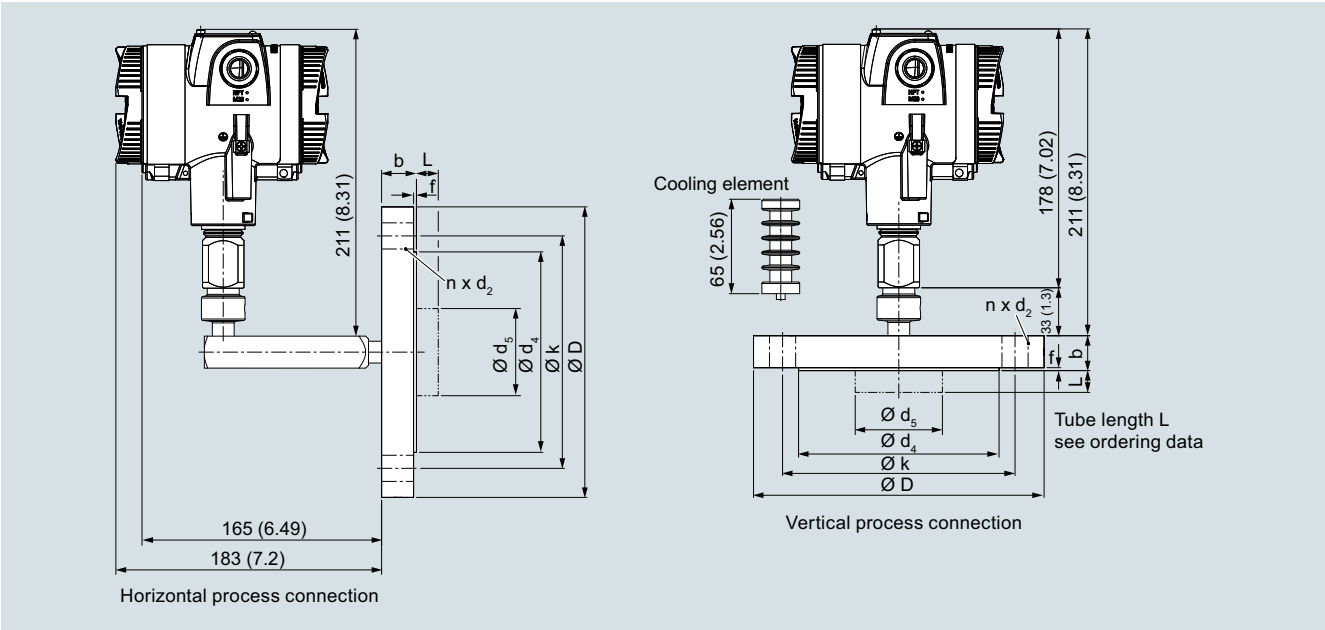

Diaphragm seals of flange design, direct connection to a SITRANS P320/420 pressure transmitter (process connection vertical (top) and horizontal (bottom)), dimensions in mm (inch)

© Siemens 2020

Diaphragm seals of flange design mounted directly on transmitter

Connection to EN 1092-1

Nominal diameter	Nominal pressure	b	D	d_2	d_4	d_5	d_M with extension	d_M without extension	f	k	n	L
		mm	mm	mm	mm	mm	mm	mm	mm	mm	mm	mm
DN 25	PN 10/16/ 25/40	18	115	14	68	24.5	22.6	27	2	85	4	0, 50, 100, 150 oder 200
	PN 63/100	24	140	18	68	24.5	22.6	27	2	100	4	
	PN 160	24	140	18	68	24.5	22.6	27	2	100	4	
	PN 250	28	150	22	68	24.5	22.6	27	2	105	4	
DN 40	PN 10/16/ 25/40	16	150	18	88	38	30	42	2	110	4	
	PN 63/100	24	170	22	88	38	30	42	2	125	4	
	PN 160	26	170	22	88	38	30	42	2	125	4	
DN 50	PN 10/16/ 25/40	18	165	18	102	48.3	40	51	2	125	4	
	PN 63/100	26	195	26	102	48.3	40	51	2	145	4	
	PN 160	28	195	26	102	48.3	40	51	2	145	4	
DN 80	PN 10/16/ 25/40	22	200	18	138	76	65	85	2	160	8	
	PN 100	30	230	26	138	76	65	85	2	180	8	
DN 100	PN 10/16	18	220	18	158	94	85	85	2	180	8	
	PN 25/40	22	235	22	162	94	85	85	2	190	8	
DN 125	PN 16	20	250	18	188	127	85	116	2	210	8	
	PN 40	24	270	26	188	127	85	116	2	220	8	

Connection to ASME B16.5

Nominal diameter	Nominal pressure	b	D	d_2	d_4	d_5	d_M with extension	d_M without extension	f	k	n	L
	lb./sq.in	inch (mm)	inch (mm)	inch (mm)	inch (mm)	inch (mm)	inch (mm)	inch (mm)	inch (mm)	inch (mm)		inch (mm)
1 inch	150	0.71 (18)	4.33 (110)	0.61 (15.6)	2 (50.8)	0.96 (24.5)	0.89 (22.6)	1.18 (30)	0.08 (2)	3.13 (79.4)	4	0, 2, 3.94, 5.94 oder 7.87 (0, 50, 100, 150 oder 200)
	300	0.77 (19.5)	4.92 (125)	0.75 (19.1)	2 (50.8)	0.96 (24.5)	0.89 (22.6)	1.18 (30)	0.08 (2)	3.5 (88.9)	4	
	600	0.96 (24.5)	4.92 (125)	0.75 (19.1)	2 (50.8)	0.96 (24.5)	0.89 (22.6)	1.18 (30)	0.28 (7)	3.5 (88.9)	4	
	1500	1.4 (35.6)	5.91 (150)	1 (25.4)	2 (50.8)	0.96 (24.5)	0.89 (22.6)	1.18 (30)	0.28 (7)	4 (101.6)	4	
1½ inch	150	0.63 (15.9)	4.92 (125)	0.63 (15.9)	2.87 (73)	1.5 (38)	1.18 (30)	1.42 (36)	0.08 (2)	3.87 (98.4)	4	
	300	0.75 (19.1)	6.10 (155)	0.87 (22.2)	2.87 (73)	1.5 (38)	1.18 (30)	1.42 (36)	0.08 (2)	4.5 (114.3)	4	
	400/600	0.88 (22.3)	6.10 (155)	0.87 (22.2)	2.87 (73)	1.5 (38)	1.18 (30)	1.42 (36)	0.28 (7)	4.5 (114.3)	4	
	900/1500	1.25 (31.8)	7.09 (180)	1.13 (28.6)	2.87 (73)	1.5 (38)	1.18 (30)	1.42 (36)	0.28 (7)	4.87 (123.8)	4	
2 inch	150	0.69 (17.5)	5.91 (150)	0.75 (19.1)	3.63 (92.1)	1.9 (48.3)	1.57 (40)	2.01 (51)	0.08 (2)	4.75 (120.7)	4	
	300	0.81 (20.7)	6.5 (165)	0.75 (19.1)	3.63 (92.1)	1.9 (48.3)	1.57 (40)	2.01 (51)	0.08 (2)	5 (127)	8	
	400/600	1.00 (25.4)	6.5 (165)	0.75 (19.1)	3.63 (92.1)	1.9 (48.3)	1.57 (40)	2.01 (51)	0.28 (7)	5 (127)	8	
	900/1500	1.5 (38.1)	8.46 (215)	1.00 (25.4)	3.63 (92.1)	1.9 (48.3)	1.57 (40)	2.01 (51)	0.28 (7)	6.5 (165.1)	8	
3 inch	150	0.88 (22.3)	7.48 (190)	0.75 (19.1)	5 (127)	3 (76)	2.65 (65)	3.35 (85)	0.08 (2)	6 (152.4)	4	
	300	1.06 (27)	8.27 (210)	0.87 (22.2)	5 (127)	3 (76)	2.65 (65)	3.35 (85)	0.08 (2)	6.63 (168.3)	8	
	600	1.23 (31.8)	8.27 (210)	0.87 (22.2)	5 (127)	3 (76)	2.65 (65)	3.35 (85)	0.28 (7)	6.63 (168.3)	8	
	1500	1.88 (47.7)	10.43 (265)	1.25 (31.8)	5 (127)	3 (76)	2.65 (65)	3.35 (85)	0.28 (7)	8 (203.2)	8	
4 inch	150	0.88 (22.3)	9.06 (230)	0.75 (19.1)	6.19 (157.2)	3.69 (94)	3.35 (85)	3.35 (85)	0.08 (2)	7.5 (190.5)	8	
	300	1.19 (30.2)	10.04 (255)	0.87 (22.2)	6.19 (157.2)	3.69 (94)	3.35 (85)	3.35 (85)	0.08 (2)	7.87 (200)	8	
	400	1.38 (35)	10.04 (255)	0.87 (22.2)	6.19 (157.2)	3.69 (94)	3.35 (85)	3.35 (85)	0.28 (7)	7.87 (200)	8	
	1500	2.13 (54)	12.20 (310)	1.37 (34.9)	6.19 (157.2)	3.69 (94)	3.35 (85)	3.35 (85)	0.28 (7)	9.5 (241.3)	8	
5 inch	150	0.88 (22.3)	10.04 (255)	0.87 (22.2)	7.31 (185.7)	5 (127)	4.57 (116)	4.57 (116)	0.08 (2)	8.5 (215.9)	8	
	300	1.31 (33.4)	11.02 (280)	0.87 (22.2)	7.31 (185.7)	5 (127)	4.57 (116)	4.57 (116)	0.08 (2)	9.25 (235)	8	
	400	1.50 (38.1)	11.02 (280)	0.87 (22.2)	7.31 (185.7)	5 (127)	4.57 (116)	4.57 (116)	0.28 (7)	9.25 (235)	8	

© Siemens 2020

Connection to J.I.S

Nominal diameter	Nominal pressure	b	D	d_2	d_4	d_5	d_M with extension	d_M without extension	f	k	n	L
		mm (inch)	mm (inch)	mm (inch)	mm (inch)	mm (inch)	mm (inch)	mm (inch)	mm (inch)	mm (inch)		mm (inch)
DN 50	10K	14 (0.55)	155 (6.10)	19 (0.75)	96 (3.78)	48.3 (1.9)	40 (1.57)	51 (2.01)	2	120 (4.72)	4	0, 50, 100, 150 oder 200 (0, 2, 3.94, 5.94 oder 7.87)
	20K	16 (0,63)	165 (6.50)	19 (0.75)	96 (3.78)	48.3 (1.9)	40 (1.57)	51 (2.01)	2	120 (4.72)	8	
	40K	26 (1.02)	165 (6.50)	19 (0.75)	105 (4.13)	48.3 (1.9)	40 (1.57)	51 (2.01)	2	130 (5.12)	8	
DN 80	10K	16 (0.63)	185 (7.28)	19 (0.75)	126 (4.96)	76 (2.99)	65 (2.56)	85 (3.35)	2	150 (5.91)	8	
	20K	20 (0.79)	200 (7.87)	23 (0.91)	132 (5.20)	76 (2.99)	65 (2.56)	85 (3.35)	2	160 (6.30)	8	
	40K	32 (1.26)	210 (8.27)	23 (0.91)	140 (5.51)	76 (2.99)	65 (2.56)	85 (3.35)	2	170 (6.30)	8	
DN 100	10K	16 (0.63)	210 (8.27)	19 (0.75)	151 (5.94)	94 (3.7)	85 (3.35)	85 (3.35)	2	175 (6.89)	8	
	20K	22 (0.87)	225 (8.86)	23 (0.91)	160 (6.30)	94 (3.7)	85 (3.35)	85 (3.35)	2	185 (7.28)	8	
	40K	36 (1.42)	250 (9.84)	25 (0.98)	165 (6.50)	94 (3.7)	85 (3.35)	85 (3.35)	2	205 (8.07)	8	

d: Internal diameter of gasket to DIN 2690
d_M: Effective diaphragm diameter

© Siemens 2020

Overview

Diaphragm seal of flange design for pressure transmitters for differential pressure, fixed connection and with flexible capillary

Technical specifications

Diaphragm seals of screwed design for pressure transmitters for differential pressure, fixed connection and with flexible capillary	
Nominal diameter	Nominal pressure
Connecting standard EN 1092-1	
• DN 40	PN 10/16/25/40/63/100/160
• DN 50	PN 10/16/25/40/63/100
• DN 80	PN 10/16/25/40/100
• DN 100	PN 10/16/25/40
• DN 125	PN 16/40
Connecting standard ASME B16.5	
• 1½ inch	Class 150/300/400/600/900/1500
• 2 inch	Class 150/300/400/600/900/1500
• 3 inch	Class 150/300/600/1500
• 4 inch	Class 150/300/400/1500
• 5 inch	Class 150/300/400
Connecting standard J.I.S.	
• DN 50	10K
• DN 80	20K
• DN 100	40K
Sealing surface	
• For stainless steel, mat. No. 1.4404/316L	To EN 1092-1, form B1 or ASME B16.5 RF 125 ... 250 AA
• For the other materials	To EN 1092-1, form B2 or ASME B16.5 RFSF

Materials	
• Main body	Stainless steel, 1.4404/316L
• Wetted parts	Stainless steel, 1.4404/316L • Without coating • PTFE coating • ECTFE coating (for vacuum on request) • PFA coating Monel 400, mat. No. 2.4360 Hastelloy C276, mat. No. 2.4819 Hastelloy C4, mat. No. 2.4602 Hastelloy C22, W.-Nr. 2.4602 Tantalum Titanium, W.-Nr. 3.7035 Nickel 201 Duplex 2205, mat. no. 1.4462 Stainless steel 316L, gold plated, thickness approx. 25 µm
• Capillary	Stainless steel, mat. No. 1.4571/316Ti
• Sheath	Spiral protective tube made of stainless steel, mat. No. 1.4404/316L
Sealing material in the process flanges	
• For pressure transmitters, absolute pressure transmitters and low-pressure applications	Copper
• For other applications	Viton
Maximum pressure	See above and the technical data of the pressure transmitter
Tube length	Without tube 50 mm (1.97 inch) 100 mm (3.94 inch) 150 mm (5.91 inch) 200 mm (7.87 inch)
Capillary	
• Length	Max. 10 m (32.8 ft), longer lengths on request
• Internal diameter	2 mm (0.079 inch)
• Minimum bending radius	150 mm (5.9 inch)
Filling liquid	Silicone oil M5 Silicone oil M50 High-temperature oil Halocarbon oil (for measuring O_2) Food oil (FDA listed)
Max. recommended temperature of medium	170 °C (338 °F)
Permissible ambient temperature	Dependent on the pressure transmitter and the filling liquid of the remote seal More information can be found in the technical data of the pressure transmitters and in the section "Technical data of filling liquid" in the Technical description to the remote seals
Weight	Approx. 4 kg (8.82 lb)
Certificate and approvals	
Classification according to pressure equipment directive (DGRL 2014/68/EU)	For gases of fluid group 1 and liquids of fluid group 1; complies with requirements of article 4, paragraph 3 (sound engineering practice)

© Siemens 2020

Selection and Ordering data		Article No.	Order code
Diaphragm seal			
Flange type design, direct connected at high-side and with flexible capillary tube at low-side to			
• SITRANS P320/P420 transmitter for differential pressure and flow, 7MF03../7MF04.. order separately Scope of delivery: 2 off		7MF0813-	
		■■■■■-0■■■	■■■
↗ Click on the Article No. for the online configuration in the PIA Life Cycle Portal.			
Nominal diameter	**Nominal pressure**		
Connecting standard EN 1092-1			
DN 40	PN 10/16/25/40	0DD	
	PN 63/100	0DF	
	PN 160	0DG	
DN 50	PN 10/16/25/40	0ED	
	PN 63	0EE	
	PN 100	0EF	
DN 80	PN 10/16/25/40	0GD	
	PN 100	0GF	
DN 100	PN 10/16	0HB	
	PN 25/40	0HD	
DN 125	PN 16	0JB	
	PN 40	0JD	
Connecting standard ASME B16.5			
1½ inch	class 150	1LA	
	class 300	1LB	
	class 400/600	1LD	
	class 900/1500	1LF	
2 inch	class 150	1MA	
	class 300	1MB	
	class 400/600	1MD	
	class 900/1500	1MF	
3 inch	class 150	1PA	
	class 300	1PB	
	class 600	1PD	
	class 1500	1PF	
4 inch	class 150	1QA	
	class 300	1QB	
	class 400	1QC	
	class 1500	1QF	
5 inch	class 150	1RA	
	class 300	1RB	
	class 400	1RC	
Connecting standard J.I.S.			
DN 50	10K	2ES	
	20K	2ET	
	40K	2EU	
DN 80	10K	2GS	
	20K	2GT	
	40K	2GU	
DN 100	10K	2HS	
	20K	2HT	
	40K	2HU	
Other version Add Order code and plain text		9AA	H1Y

Selection and Ordering data	Article No.	Order code
Diaphragm seal		
Flange type design, direct connected at high-side and with flexible capillary tube at low-side to		
• SITRANS P320/P420 transmitter for differential pressure and flow, 7MF03../7MF04.. order separately Scope of delivery: 2 off	7MF0813-	
	■■■■■-0■■■	■■■
Length of capillary tube at low-side		
1 m	10	
1,6 m	11	
2 m	12	
2,5 m	13	
3 m	14	
4 m	15	
5 m	16	
6 m	17	
7 m	18	
8 m	20	
9 m	21	
10 m	22	
Other version Add Order code and plain text	98	L1Y
Filling liquid		
Silicone oil M50	B	
High-temperature oil	C	
Silicone oil M5	A	
Food-grade oil (FDA listed)	E	
Halocarbon oil	D	
Other version Add Order code and plain text	Z	P1Y

© Siemens 2020

Diaphragm seals of flange design mounted directly and with capillary

Selection and Ordering data	Article No.	Order code
Diaphragm seal		
Flange type design, direct connected at high-side and with flexible capillary tube at low-side to		
• SITRANS P320/P420 transmitter for differential pressure and flow, 7MF03../7MF04.. order separately Scope of delivery: 2 off	7MF0813-	
	■■■■■ - 0 ■■■	■■■
Wetted parts materials		
Stainless steel 316L		
• Without coating		A
• With PFA coating		D
• With PTFE coating		E 0
• With ECTFE coating		F
Monel 400, 2.4360		G
Hastelloy C276, 2.4819		J
Tantalum		K
Titanium, 3.7035		L 0
Nickel 201		M 0
Diaphragm Duplex, 1.4462		Q
Diaphragm plus flange Duplex, 1.4462		R
Stainless steel 316L with gold coating		S 0
Hastelloy C4, 2.4610		U 0
Hastelloy C22, 2.4602		V 0
Other version Add Order code and plain text		Z 8 Q 1 Y
Extension length		
• without		0
• 50 mm (2")		1
• 100 mm (4")		2
• 150 mm (6")		3
• 200 mm (8")		4
• 250 mm (10")		5
Other version Add Order code and plain text		Z 8 Q 1 Y
Customer-specific extension length		
• Wetted parts stainless steel without coating		
Range / Standard length		
20 ... 50 mm (0.79 ... 1.97") / 50 mm (1.97")		A 1
51 ... 100 mm (2.01 ... 3.94") / 100 mm (3.94")		A 2
101 ... 150 mm (3.98 ... 5.91") / 150 mm (5.91")		A 3
151 ... 200 mm (5.94 ... 7.87") / 200 mm (7.87")		A 4
201 ... 250 mm (7.91 ... 9.84") / 250 mm (9.84")		A 5
• Wetted parts stainless steel with ECTFE coating		
Range / Standard length		
20 ... 50 mm (0.79 ... 1.97") / 50 mm (1.97")		F 1
51 ... 100 mm (2.01 ... 3.94") / 100 mm (3.94")		F 2
101 ... 150 mm (3.98 ... 5.91") / 150 mm (5.91")		F 3
151 ... 200 mm (5.94 ... 7.87") / 200 mm (7.87")		F 4
201 ... 250 mm (7.91 ... 9.84") / 250 mm (9.84")		F 5

Selection and Ordering data	Article No.	Order code
Diaphragm seal		
Flange type design, direct connected at high-side and with flexible capillary tube at low-side to		
• SITRANS P320/P420 transmitter for differential pressure and flow, 7MF03../7MF04.. order separately Scope of delivery: 2 off	7MF0813-	
	■■■■■ - 0 ■■■	■■■
• Wetted parts stainless steel with PFA coating		
Range / Standard length		
20 ... 50 mm (0.79 ... 1.97") / 50 mm (1.97")		D 1
51 ... 100 mm (2.01 ... 3.94") / 100 mm (3.94")		D 2
101 ... 150 mm (3.98 ... 5.91") / 150 mm (5.91")		D 3
151 ... 200 mm (5.94 ... 7.87") / 200 mm (7.87")		D 4
201 ... 250 mm (7.91 ... 9.84") / 250 mm (9.84")		D 5
• Wetted parts Monel 400		
Range / Standard length		
20 ... 50 mm (0.79 ... 1.97") / 50 mm (1.97")		G 1
51 ... 100 mm (2.01 ... 3.94") / 100 mm (3.94")		G 2
101 ... 150 mm (3.98 ... 5.91") / 150 mm (5.91")		G 3
151 ... 200 mm (5.94 ... 7.87") / 200 mm (7.87")		G 4
• Wetted parts Hastelloy C276		
Range / Standard length		
20 ... 50 mm (0.79 ... 1.97") / 50 mm (1.97")		J 1
51 ... 100 mm (2.01 ... 3.94") / 100 mm (3.94")		J 2
101 ... 150 mm (3.98 ... 5.91") / 150 mm (5.91")		J 3
151 ... 200 mm (5.94 ... 7.87") / 200 mm (7.87")		J 4
• Wetted parts Tantalum		
Range / Standard length		
20 ... 50 mm (0.79 ... 1.97") / 50 mm (1.97")		K 1
51 ... 100 mm (2.01 ... 3.94") / 100 mm (3.94")		K 2
101 ... 150 mm (3.98 ... 5.91") / 150 mm (5.91")		K 3
151 ... 200 mm (5.94 ... 7.87") / 200 mm (7.87")		K 4

© Siemens 2020

Selection and Ordering data	Order code
Further designs	
Add "**-Z**" to Article No. and specify Order code.	
Factory certificates	
Quality inspection certificate (Five-step factory calibration) to IEC 60770-2	**C11**
Inspection certificate to EN 10204-3.1 - material of body and wetted parts	**C12**
Manufacturer's declaration acc. to NACE (MR 0103-2012 and MR 0175-2009) (only together with seal diaphragm made of Hastelloy and stainless steel)	**C13**
Inspection certificate (EN 10204-3.1) - PMI test of pressure containing and wetted parts	**C15**
Certificate of FDA-approved fill oil (to EN10204-2.2)	**C17**
Factory certificate functional safety (SIL2/3), devices suitable for use according to IEC 61508 and IEC 61511 (includes SIL conformity declaration)	**C20**
Accessories	
Spark arrestor (for differential pressure and level transmitters)	**D62**
Low-temperature version (for Silicon Oil M50 only)	**D67**
Negative pressure services	
Negative pressure service (for differential pressure transmitters)	**D83**
Extended negative pressure service (for differential pressure transmitters)	**D88**
General product approvals without explosion proof approvals	
Oil-and grease-free cleaned version (for O_2-appl. including certificate EN10204-2.2 (only with fill fluid Halocarbon oil max. temperature 60 °C and max. pressure 50 bar)	**E80**
Oil-and grease-free cleaned version (not for O_2-appl. including certificate EN10204-2.2 (only with fill fluid Halocarbon oil)	**E87**
Sealing surface	
Sealing surface smooth, form B2/EN1092-1 resp. RFSF/ANSI B16.5 (wetted parts 316L only)	**M50**
Sealing surface groove to EN1092-1, form D (instead of sealing surface B1, wetted parts 316L only)	**M54**
Sealing surface RJF (groove) to ASME B16.5 (instead of sealing surface RF 125...250AA, wetted parts 316L only)	**M64**
Sealing surface with tongue to EN1092-1, form C (wetted parts 316L only)	
• DN 25	**M70**
• DN 40	**M71**
• DN 50	**M72**
• DN 80	**M73**
• DN 100	**M74**
• DN 125	**M75**
Sealing surface with spigot to EN1092-1, form E (wetted parts 316L only)	
• DN 25	**M76**
• DN 40	**M77**
• DN 50	**M78**
• DN 80	**M79**
• DN 100	**M80**
• DN 125	**M81**
Sealing surface with recess to EN1092-1, form F (wetted parts 316L only)	
• DN 25	**M82**
• DN 40	**M83**
• DN 50	**M84**
• DN 80	**M85**
• DN 100	**M86**
• DN 125	**M87**

Selection and Ordering data	Order code
Further designs	
Add "**-Z**" to Article No. and specify Order code.	
Capillary coating	
PE protective tube	
1 m	**S10**
1,6 m	**S11**
2 m	**S12**
2,5 m	**S13**
3 m	**S14**
4 m	**S15**
5 m	**S16**
6 m	**S17**
7 m	**S18**
8 m	**S19**
9 m	**S20**
10 m	**S21**
PTFE protective tube	
1 m	**S40**
1,6 m	**S41**
2 m	**S42**
2,5 m	**S43**
3 m	**S44**
4 m	**S45**
5 m	**S46**
6 m	**S47**
7 m	**S48**
8 m	**S49**
9 m	**S50**
10 m	**S51**
PVC protective tube	
1 m	**S70**
1,6 m	**S71**
2 m	**S72**
2,5 m	**S73**
3 m	**S74**
4 m	**S75**
5 m	**S76**
6 m	**S77**
7 m	**S78**
8 m	**S79**
9 m	**S80**
10 m	**S81**
Customer-specific tube length	
Customer-specific tube length (specify in plain text)	**Y44**
Specification of process conditions[1)]	
Ambient temperature range	
• -10 ... +50 °C (14 ... +122 °F) preset	**D66**
• -40 ... +50 °C (-40 ... +122 °F)	**D67**
• -10 ... +85 °C (14 ... +185 °F)	**D68**
Process temperature min. ... °C/(°F)/max. ... °C/(°F)	**Y50**

1) See also "Specification of process conditions for selection and ordering data", page 1/337.

© Siemens 2020

Dimensional drawings

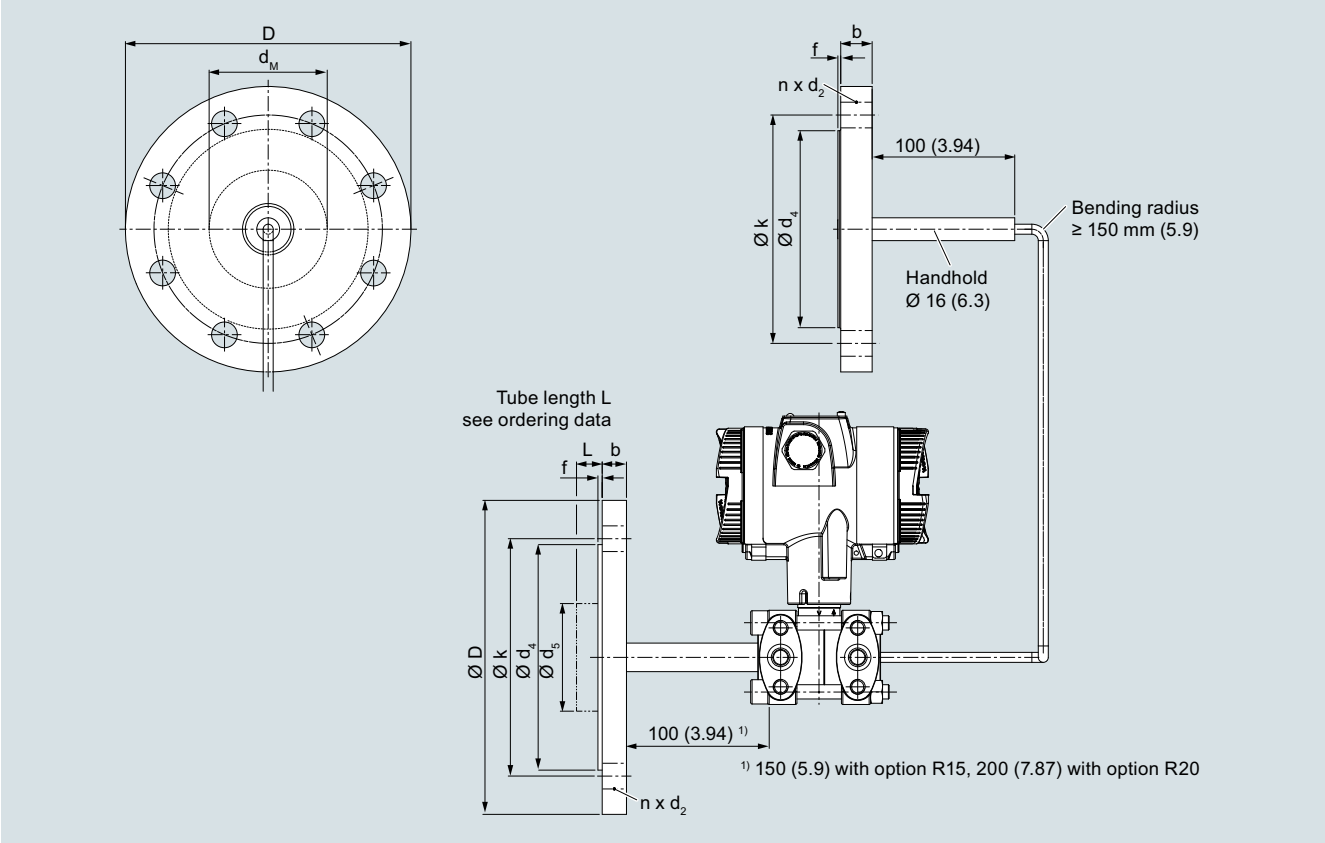

Diaphragm seals of screwed design with flexible capillary, fixed connection, for connection to a SITRANS P320/420 pressure transmitter for differential pressure, dimensions in mm (inch)

© Siemens 2020

Connection to EN 1092-1

Nominal diameter	Nominal pressure	b	D	d_2	d_4	d_5	d_M with extension	d_M without extension	f	k	n	L
		mm	mm	mm	mm	mm	mm	mm	mm	mm	mm	mm
DN 40	PN 10/16/ 25/40	16	150	18	88	38	30	42	2	110	4	0, 50, 100, 150 oder 200
	PN 63/100	24	170	22	88	38	30	42	2	125	4	
	PN 160	26	170	22	88	38	30	42	2	125	4	
DN 50	PN 10/16/ 25/40	18	165	18	102	48.3	40	51	2	125	4	
	PN 63/100	26	195	26	102	48.3	40	51	2	145	4	
	PN 160	28	195	26	102	48.3	40	51	2	145	4	
DN 80	PN 10/16/ 25/40	22	200	18	138	76	65	85	2	160	8	
	PN 100	30	230	26	138	76	65	85	2	180	8	
DN 100	PN 10/16	18	220	18	158	94	85	85	2	180	8	
	PN 25/40	22	235	22	162	94	85	85	2	190	8	
DN 125	PN 16	20	250	18	188	127	85	116	2	210	8	
	PN 40	24	270	26	188	127	85	116	2	220	8	

Connection to ASME B16.5

Nominal diameter	Nominal pressure	b	D	d_2	d_4	d_5	d_M with extension	d_M without extension	f	k	n	L
	lb./sq.in	inch (mm)	inch (mm)	inch (mm)	inch (mm)	inch (mm)	inch (mm)	inch (mm)	inch (mm)	inch (mm)		inch (mm)
1½ inch	150	0.63 (15.9)	4.92 (125)	0.63 (15.9)	2.87 (73)	1.5 (38)	1.18 (30)	1.42 (36)	0.08 (2)	3.87 (98.4)	4	0, 2, 3.94, 5.94 oder 7.87 (0, 50, 100, 150 oder 200)
	300	0.75 (19.1)	6.10 (155)	0.87 (22.2)	2.87 (73)	1.5 (38)	1.18 (30)	1.42 (36)	0.08 (2)	4.5 (114.3)	4	
	400/600	0.88 (22.3)	6.10 (155)	0.87 (22.2)	2.87 (73)	1.5 (38)	1.18 (30)	1.42 (36)	0.28 (7)	4.5 (114.3)	4	
	900/1500	1.25 (31.8)	7.09 (180)	1.13 (28.6)	2.87 (73)	1.5 (38)	1.18 (30)	1.42 (36)	0.28 (7)	4.87 (123.8)	4	
2 inch	150	0.69 (17.5)	5.91 (150)	0.75 (19.1)	3.63 (92.1)	1.9 (48.3)	1.57 (40)	2.01 (51)	0.08 (2)	4.75 (120.7)	4	
	300	0.81 (20.7)	6.5 (165)	0.75 (19.1)	3.63 (92.1)	1.9 (48.3)	1.57 (40)	2.01 (51)	0.08 (2)	5 (127)	8	
	400/600	1.00 (25.4)	6.5 (165)	0.75 (19.1)	3.63 (92.1)	1.9 (48.3)	1.57 (40)	2.01 (51)	0.28 (7)	5 (127)	8	
	900/1500	1.5 (38.1)	8.46 (215)	1.00 (25.4)	3.63 (92.1)	1.9 (48.3)	1.57 (40)	2.01 (51)	0.28 (7)	6.5 (165.1)	8	
3 inch	150	0.88 (22.3)	7.48 (190)	0.75 (19.1)	5 (127)	3 (76)	2.65 (65)	3.35 (85)	0.08 (2)	6 (152.4)	4	
	300	1.06 (27)	8.27 (210)	0.87 (22.2)	5 (127)	3 (76)	2.65 (65)	3.35 (85)	0.08 (2)	6.63 (168.3)	8	
	600	1.23 (31.8)	8.27 (210)	0.87 (22.2)	5 (127)	3 (76)	2.65 (65)	3.35 (85)	0.28 (7)	6.63 (168.3)	8	
	1500	1.88 (47.7)	10.43 (265)	1.25 (31.8)	5 (127)	3 (76)	2.65 (65)	3.35 (85)	0.28 (7)	8 (203.2)	8	
4 inch	150	0.88 (22.3)	9.06 (230)	0.75 (19.1)	6.19 (157.2)	3.69 (94)	3.35 (85)	3.35 (85)	0.08 (2)	7.5 (190.5)	8	
	300	1.19 (30.2)	10.04 (255)	0.87 (22.2)	6.19 (157.2)	3.69 (94)	3.35 (85)	3.35 (85)	0.08 (2)	7.87 (200)	8	
	400	1.38 (35)	10.04 (255)	0.87 (22.2)	6.19 (157.2)	3.69 (94)	3.35 (85)	3.35 (85)	0.28 (7)	7.87 (200)	8	
	1500	2.13 (54)	12.20 (310)	1.37 (34.9)	6.19 (157.2)	3.69 (94)	3.35 (85)	3.35 (85)	0.28 (7)	9.5 (241.3)	8	
5 inch	150	0.88 (22.3)	10.04 (255)	0.87 (22.2)	7.31 (185.7)	5 (127)	4.57 (116)	4.57 (116)	0.08 (2)	8.5 (215.9)	8	
	300	1.31 (33.4)	11.02 (280)	0.87 (22.2)	7.31 (185.7)	5 (127)	4.57 (116)	4.57 (116)	0.08 (2)	9.25 (235)	8	
	400	1.50 (38.1)	11.02 (280)	0.87 (22.2)	7.31 (185.7)	5 (127)	4.57 (116)	4.57 (116)	0.28 (7)	9.25 (235)	8	

© Siemens 2020

Diaphragm seals of flange design mounted directly and with capillary

Connection to J.I.S

Nominal diameter	Nominal pressure	b	D	d_2	d_4	d_5	d_M with extension	d_M without extension	f	k	n	L
		mm (inch)	mm (inch)	mm (inch)	mm (inch)	mm (inch)	mm (inch)	mm (inch)	mm (inch)	mm (inch)		mm (inch)
DN 50	10K	14 (0.55)	155 (6.10)	19 (0.75)	96 (3.78)	48.3 (1.9)	40 (1.57)	51 (2.01)	2	120 (4.72)	4	0, 50, 100, 150 oder 200 (0, 2, 3.94, 5.94 oder 7.87)
	20K	16 (0,63)	165 (6.50)	19 (0.75)	96 (3.78)	48.3 (1.9)	40 (1.57)	51 (2.01)	2	120 (4.72)	8	
	40K	26 (1.02)	165 (6.50)	19 (0.75)	105 (4.13)	48.3 (1.9)	40 (1.57)	51 (2.01)	2	130 (5.12)	8	
DN 80	10K	16 (0.63)	185 (7.28)	19 (0.75)	126 (4.96)	76 (2.99)	65 (2.56)	85 (3.35)	2	150 (5.91)	8	
	20K	20 (0.79)	200 (7.87)	23 (0.91)	132 (5.20)	76 (2.99)	65 (2.56)	85 (3.35)	2	160 (6.30)	8	
	40K	32 (1.26)	210 (8.27)	23 (0.91)	140 (5.51)	76 (2.99)	65 (2.56)	85 (3.35)	2	170 (6.30)	8	
DN 100	10K	16 (0.63)	210 (8.27)	19 (0.75)	151 (5.94)	94 (3.7)	85 (3.35)	85 (3.35)	2	175 (6.89)	8	
	20K	22 (0.87)	225 (8.86)	23 (0.91)	160 (6.30)	94 (3.7)	85 (3.35)	85 (3.35)	2	185 (7.28)	8	
	40K	36 (1.42)	250 (9.84)	25 (0.98)	165 (6.50)	94 (3.7)	85 (3.35)	85 (3.35)	2	205 (8.07)	8	

d: Internal diameter of gasket to DIN 2690
d_M: Effective diaphragm diameter

© Siemens 2020

Overview

Diaphragm seal, screwed gland design with inside diaphragm for gauge, absolute and differential pressure for direct mounting

Process connection, open measuring flange

Technical specifications

Diaphragm seal, screwed gland with inside diaphragm	
Process connection	Nominal pressure
• Open flange EN1092-1	
- DN 15	PN 10/16/25/40/63/100/160/250
- DN 20	PN 10/16/25/40
- DN 25	PN 10/16/25/40/63/100/160/250
• Open flange ASME B16.5	
- ½ inch, ¾ inch, 1 inch	Class 150/300/600/1500
• Thread to EN 837-1	
- G¼"B, G½"B, G¾"B, G1"B	PN 100/250
• Thread ASME B1.20.1	
- ¼" NPT-M, ¼" NPT-F	Class 1500/3675
- ½" NPT-M, ½" NPT-F	Class 1500/3675
- ¾" NPT-M, ¾" NPT-F	Class 1500/3675
- 1" NPT-M, 1" NPT-F	Class 1500/3675
Sealing surface for open measurement flange	
• For stainless steel, mat. no. 1.4404/316L	To EN 1092-1, form B1 or ASME B16.5 RF 125 ... 250 AA
Materials	
• Lower section (in the case of process connection thread)	Stainless steel, Mat. no. 1.4404/316L
• Diaphragm	Stainless steel, Mat. no. 1.4404/316L
	• No coating
	• With PTFE coating
	Monel 400, mat. no. 2.4360
	Hastelloy C276, mat. no. 2.4819
	Hastelloy C4, mat. no. 2.4602
	Tantal
	Stainless steel 316L, gold plated, thickness approx. 25 µm
• Top section (process connection in the case of an open measurement flange)	Stainless steel, mat. no. 1.4404/316L
• Capillary	Stainless steel 1.4404/316L
• Sealing material on the process connection	Viton or copper (in the case of vacuum-free version)
• Sealing material between top and bottom section	Viton (FKM) (standard) Teflon (PTFE) metal spring ring (silver-coated)
Capillary	
• Length	Max. 10 m (32.8 ft)
• Internal diameter	2 mm (0.079 inch)
• Minimum bending radius	150 mm (5.9 inch)
• Sheath	Stainless steel protective tube, mat. No. 1.4301/304
Filling liquid	• Silicone oil M5
	• Silicone oil M50
	• High-temperature oil
	• Halocarbon oil (for measuring O_2)
	• Food oil (FDA listed)
Max. recommended temperature of medium	170 °C (338 °F)
Permissible ambient temperature	Dependent on the pressure transmitter and the filling liquid of the remote seal More information can be found in the technical specifications of the pressure transmitters and in the section "Technical data of filling liquid" in the introduction to the remote seals
Weight	Approx. 1.5 kg (3.3 lb)
Certificates and approvals	
Classification according to pressure equipment directive (PED 2014/68/EU)	For gases of fluid group 1 and liquids of fluid group 1; complies with requirements of article 4, paragraph 3 (sound engineering practice)

© Siemens 2020

Diaphragm seal, screwed design, directly mounted or/and with capillary

Selection and Ordering data	Article No.	Order code
Diaphragm seal threaded design		
With inside diaphragm, directly connected or connected via flexible capillary tube to a		
• SITRANS P320/P420 transmitter for gauge pressure or absolute pressure (only together with negative pressure service), 7MF03../7MF04.. order separately Scope of delivery: 1 off ↗	7MF0840-	
• SITRANS P320/P420 transmitter for differential pressure and flow, 7MF03../7MF04.. order separately, Scope of delivery: 2 off ↗	7MF0842-	
	■■■■■-0■■0	■■■
↗ Click on the Article No. for the online configuration in the PIA Life Cycle Portal.		
Nominal diameter / **Nominal pressure**		
Open flange, connecting standard EN 1092-1		
DN 15 / PN 10/16/25/40	0AD	
PN 63/100	0AF	
PN 160	0AG	
PN 250	0AH	
DN 20 / PN 10/16/25/40	0AM	
DN 25 / PN 10/16/25/40	0BD	
PN 63/100	0BF	
PN 160	0BG	
PN 250	0BH	
Open flange, connecting standard ASME B16.5		
½ inch / class 150	1KA	
class 300	1KB	
class 600	1KC	
class 1500	1KD	
¾ inch / class 150	1KF	
class 300	1KG	
class 600	1KH	
class 1500	1KJ	
1 inch / class 150	1KL	
class 300	1KM	
class 600	1KN	
class 1500	1KP	
Process connection thread EN 837-1		
G¼"B / PN 100	3SB	
G¼"B / PN 250	3SC	
G½"B / PN 100	3SF	
G½"B / PN 250	3SG	
G¾"B / PN 100	3SK	
G¾"B / PN 250	3SL	
G1"B / PN 100	3SP	
G1"B / PN 250	3SQ	
Process connection thread ASME B1.20.1		
¼"-NPT-M / Class 1500	5TA	
¼"-NPT-M / Class 3675	5TB	
¼"-NPT-F / Class 1500	5TC	
¼"-NPT-F / Class 3675	5TD	
½"-NPT-M / Class 1500	5TE	
½"-NPT-M / Class 3675	5TF	
½"-NPT-F / Class 1500	5TG	
½"-NPT-F / Class 3675	5TH	
¾"-NPT-M / Class 1500	5TJ	
¾"-NPT-M / Class 3675	5TK	
¾"-NPT-F / Class 1500	5TL	
¾"-NPT-F / Class 3675	5TM	
1"-NPT-M / Class 1500	5TN	
1"-NPT-M / Class 3675	5TP	
1"-NPT-F / Class 1500	5TQ	
1"-NPT-F / Class 3675	5TR	
Other version Add Order code and plain text	9AA	H1Y

Selection and Ordering data	Article No.	Order code
Diaphragm seal threaded design		
With inside diaphragm, directly connected or connected via flexible capillary tube to a		
• SITRANS P320/P420 transmitter for gauge pressure or absolute pressure (only together with negative pressure service), 7MF03../7MF04.. order separately Scope of delivery: 1 off	7MF0840-	
• SITRANS P320/P420 transmitter for differential pressure and flow, 7MF03../7MF04.. order separately, Scope of delivery: 2 off	7MF0842-	
	■■■■■-0■■0	■■■
Transmitter connection		
Without capillary tube, direct mount straight connection (for gauge pressure)	00	
Connection via capillary tube Length of capillary		
1 m	10	
1,6 m	11	
2 m	12	
2,5 m	13	
3 m	14	
4 m	15	
5 m	16	
6 m	17	
7 m	18	
8 m	20	
9 m	21	
10 m	22	
Other version Add Order code and plain text	98	L1Y
Filling liquid		
Silicone oil M50	B	
High-temperature oil	C	
Silicone oil M5	A	
Food-grade oil (FDA listed)	E	
Halocarbon oil	D	
Other version Add Order code and plain text	Z	P1Y
Wetted parts materials		
Stainless steel 316L without coating	A	
Stainless steel 316L with PTFE-coating	E	
Monel 400, 2.4360	G	
Hastelloy C276, 2.4819	J	
Tantalum	K	
Stainless steel 316L with gold coating	S	
Hastelloy C4, 2.4610	U	
Other version Add Order code and plain text	Z	Q1Y

© Siemens 2020

Selection and Ordering data	Order code
Further designs	
Add "**-Z**" to Article No. and specify Order code.	
Factory certificates	
Quality inspection certificate (Five-step factory calibration) to IEC 60770-2	**C11**
Inspection certificate to EN 10204-3.1 - material of body and wetted parts	**C12**
Manufacturer's declaration acc. to NACE (MR 0103-2012 and MR 0175-2009) (only together with seal diaphragm made of Hastelloy and stainless steel)	**C13**
Inspection certificate (EN 10204-3.1) - PMI test of pressure containing and wetted parts	**C15**
Certificate of FDA-approved fill oil (to EN10204-2.2)	**C17**
Factory certificate functional safety (SIL2/3), devices suitable for use according to IEC 61508 and IEC 61511 (includes SIL conformity declaration)	**C20**
Accessories	
Low-temperature version (for Silicon Oil M50 only)	**D67**
Flushing port ¼"-18 NPT unsealed	**D70**
Flushing port ¼"-18 NPT sealed with stainless steel plug	**D71**
Sealing material between upper and lower enclosure PTFE (instead of FKM viton)	**D75**
Sealing material between upper and lower enclosure metal C-circlip (instead of FKM viton)	**D76**
PTFE coating for lower enclosure (only for G½B PN 100, DN 25 PN 10 ... 40, 1 inch Class 150/300)	**D77**
Negative pressure services	
Negative pressure service (for gauge and absolute pressure transmitters)	**D81**
Negative pressure service (for differential pressure transmitters)	**D83**
Extended negative pressure service (for gauge and absolute pressure transmitters)	**D85**
Extended negative pressure service (for differential pressure transmitters)	**D88**
General product approvals without explosion proof approvals	
Oil-and grease-free cleaned version (for O_2-appl. including certificate EN10204-2.2 (only with fill fluid Halocarbon oil max. temperature 60 °C and max. pressure 50 bar)	**E80**
Oil-and grease-free cleaned version (not for O_2-appl. including certificate EN10204-2.2 (only with fill fluid Halocarbon oil)	**E87**
Capillary connection (only for 7MF0840)	
Single-side mounted at differential pressure transmitters at high-side	**S03**
Single-side mounted at differential pressure transmitters at low-side	**S04**
Cooling element	**S08**

Selection and Ordering data	Order code
Further designs	
Add "**-Z**" to Article No. and specify Order code.	
Capillary coating	
PE protective tube	
1 m	**S10**
1,6 m	**S11**
2 m	**S12**
2,5 m	**S13**
3 m	**S14**
4 m	**S15**
5 m	**S16**
6 m	**S17**
7 m	**S18**
8 m	**S19**
9 m	**S20**
10 m	**S21**
PTFE protective tube	
1 m	**S40**
1,6 m	**S41**
2 m	**S42**
2,5 m	**S43**
3 m	**S44**
4 m	**S45**
5 m	**S46**
6 m	**S47**
7 m	**S48**
8 m	**S49**
9 m	**S50**
10 m	**S51**
PVC protective tube	
1 m	**S70**
1,6 m	**S71**
2 m	**S72**
2,5 m	**S73**
3 m	**S74**
4 m	**S75**
5 m	**S76**
6 m	**S77**
7 m	**S78**
8 m	**S79**
9 m	**S80**
10 m	**S81**
Customer-specific tube length	
Customer-specific tube length (specify in plain text)	**Y44**
Specification of process conditions[1)]	
Ambient temperature range	
• -10 ... +50 °C (14 ... +122 °F) preset	**D66**
• -40 ... +50 °C (-40 ... +122 °F)	**D67**
• -10 ... +85 °C (14 ... +185 °F)	**D68**
Process temperature min. ... °C/(°F)/max. ... °C/(°F)	**Y50**

1) See also "Specification of process conditions for selection and ordering data", page 1/337.

© Siemens 2020

Dimensional drawings

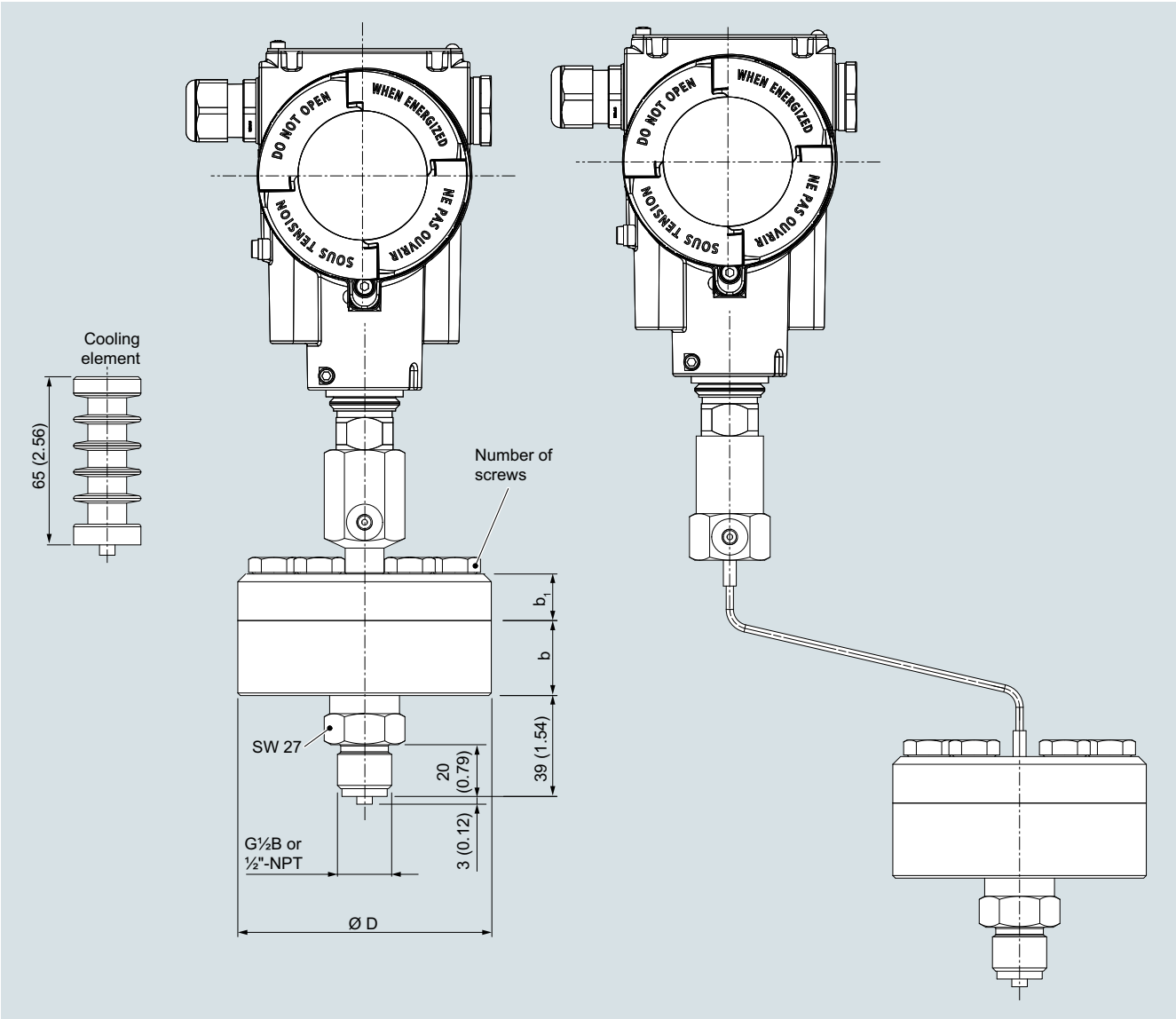

Diaphragm seal, screwed gland with inside diaphragm, for gauge and absolute pressure, direct and attached directly to the transmitter with with capillaries, dimensions in mm (inch)

Range	D mm	b mm	b_1 mm	Number of screws
up to 100 bar	98	14	16	6
up to 250 bar	98	14	20	12

© Siemens 2020

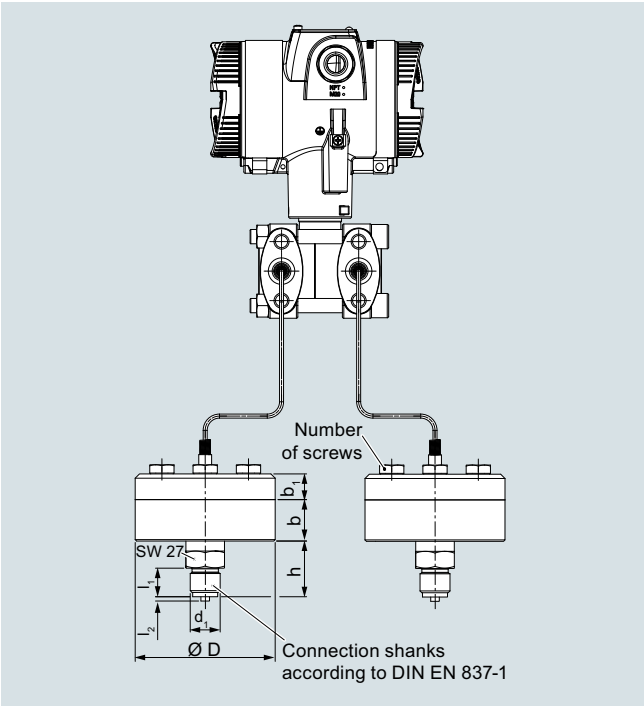

Diaphragm seal, screwed gland with inside diaphragm, for differential pressure, direct and attached directly to the transmitter with with capillaries, dimensions in mm (inch)

Nominal diameter	Nominal pressure	D mm	d_4 mm	k mm	M	Number of holes	b mm	b_1 mm	f mm
DN 25	PN 10/16/ 25/40	115	68	85	M12	4	26	12	2
1 inch	150 lb/sq.in	110	50.8	79.4	M12	4	32	12	2
1 inch	300 lb/sq.in	125	50.8	88.9	M16	4	32	12	2

© Siemens 2020

Overview

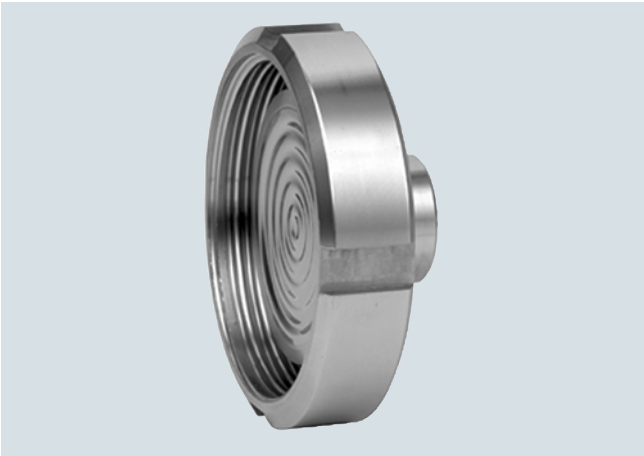

Quick-release diaphragm seals, to DIN 11851 with slotted union nut

Quick-release diaphragm seals, with clamp connection

Quick-release diaphragm seals are available for the following SITRANS P pressure transmitter series:

- For pressure: P300, DS III with HART, DS III with PROFIBUS PA and DS III with FOUNDATION Fieldbus
- For differential pressure and flow: P500, DS III with HART, DS III with PROFIBUS PA and DS III with FOUNDATION Fieldbus
- The quick-release remote seals are common designs in the food industry. Their design means that the medium cannot accumulate in dead volumes. The quick-release clamp present on the remote seal means that quick dismounting is possible for cleaning.

Technical specifications

Quick-release diaphragm seal	
Connection, nominal diameter	Nominal pressure
• Standard to DIN 11851 with nut	
- DN 25/32/40	PN 40
- DN 50/65/80	PN 25
• Standard to DIN 11851 with thread	
- DN 25/32/40	PN 40
- DN 50/65/80	PN 25
• Standard clamp ISO 2852	
- DN 25/38/51	PN 16
- DN 63.5/76.1	PN 10
• Standard clamp DIN 32676, row C Tri-clamp	
- 1 inch, 1½ inch	PN 25
- 2 inch, 2½ inch	PN 16
- 3 inch	PN 10
• Standard clamp DIN 32676, row A metric	
- DN 25/32/40	PN 25
- DN 50	PN 16
- DN 65	PN 10
• Varivent	
- DN 25/32/40/50	PN 25
• DRD-flange	
- DN 50	PN 40
Sealing surface	
• For stainless steel, mat. No. 1.4404/316L	To EN 1092-1, form B1 or ASME B 16.5RF 125 ... 250 AA
• For the other materials	To EN 1092-1, form B2 or ASME B16.5 RFSF
Materials	
• Main body	Stainless steel 316L
• Wetted parts	Stainless steel 316L
• Capillary	Stainless steel, mat. No. 1.4571/316Ti
• Sheath	Spiral protective tube made of stainless steel, mat. No. 1.4301/316
Maximum pressure	See above and the technical data of the pressure transmitter
Tube length	Without tube
Capillary	
• Length	Max. 10 m (32.8 ft), longer lengths on request
• Internal diameter	2 mm (0.079 inch)
• Minimum bending radius	150 mm (5.9 inch)
• Sheath	Spiral protective tube made of stainless steel, mat. No. 1.4404/316L
Filling liquid	Food oil (FDA listed)
Permissible ambient temperature	Dependent on the pressure transmitter and the filling liquid of the remote seal More information can be found in the technical data of the pressure transmitters and in the section "Technical data of filling liquid" in the Technical description to the remote seals
Weight	Approx. 4 kg (8.82 lb)
Certificates and approvals	
Classification according to pressure equipment directive (DGRL 2014/68/EU)	For gases of fluid group 1 and liquids of fluid group 1; complies with requirements of article 4, paragraph 3 (sound engineering practice)
EHEDG	Complies with EHEDG recommendations

© Siemens 2020

Selection and Ordering data	Article No.	Order code
Quick release diaphragm seal		
Flange type design, with flexible capillary tube or directly connected to a		
• SITRANS P320/P420 transmitter for gauge pressure or absolute pressure (only together with negative pressure service), 7MF03../7MF04.. order separately Scope of delivery: 1 off ↗	7MF0830-	
• SITRANS P320/P420 transmitter for differential pressure and flow, 7MF03../7MF04.. order separately Scope of delivery: 1 off ↗	7MF0832-	
	■■■■■-0■A0	■■■
↗ Click on the Article No. for the online configuration in the PIA Life Cycle Portal.		
Nominal diameter / **Nominal pressure**		
Connection standard DIN 11851 with nut		
DN 25 / PN 40	0BM	
DN 32 / PN 40	0CD	
DN 40 / PN 40	0DM	
DN 50 / PN 25	0EK	
DN 65 / PN 25	0FL	
DN 80 / PN 25	0GK	
Connection standard DIN 11851 with thread		
DN 25 / PN 40	1BM	
DN 32 / PN 40	1CD	
DN 40 / PN 40	1DM	
DN 50 / PN 25	1EK	
DN 65 / PN 25	1FL	
DN 80 / PN 25	1GK	
Connection standard Clamp ISO 2852		
DN 25 / PN 16	2BK	
DN 38 / PN 16	2CQ	
DN 51 / PN 16	2FH	
DN 63.5 / PN 10	2FJ	
DN 76.1 / PN 10	2GJ	
Connection standard Clamp DIN 32676, row C Tri-clamp		
DN 1" / PN 25	3KV	
DN 1½" / PN 25	3LV	
DN 2" / PN 16	3MV	
DN 2½" / PN 16	3NV	
DN 3" / PN 10	3PV	
Connection standard Clamp DIN 32676, row A metric		
DN 25 / PN 25	4BL	
DN 32 / PN 25	4CC	
DN 40 / PN 25	4DL	
DN 50 / PN 16	4EJ	
DN 65 / PN 10	4FK	
Varivent		
DN 25/32 / PN 25	5CL	
DN 40/50 / PN 25	5DK	
DRD-flange		
DN 50 / PN 40	6EM	
Other version Add Order code and plain text	9AA	H1Y

Selection and Ordering data	Article No.	Order code
Quick release diaphragm seal		
Flange type design, with flexible capillary tube or directly connected to a		
• SITRANS P320/P420 transmitter for gauge pressure or absolute pressure (only together with negative pressure service), 7MF03../7MF04.. order separately Scope of delivery: 1 off	7MF0830-	
• SITRANS P320/P420 transmitter for differential pressure and flow, 7MF03../7MF04.. order separately Scope of delivery: 1 off	7MF0832-	
	■■■■■-0■A0	■■■
Transmitter connection		
Without capillary tube, direct mount straight connection (for gauge pressure)	00	
Connection via capillary tube Length of capillary		
1 m	10	
1,6 m	11	
2 m	12	
2,5 m	13	
3 m	14	
4 m	15	
5 m	16	
6 m	17	
7 m	18	
8 m	20	
9 m	21	
10 m	22	
Other version Add Order code and plain text	98	L1Y
Filling liquid		
Food-grade oil (FDA listed)	E	
Other version Add Order code and plain text	Z	P1Y

© Siemens 2020

Quick-release diaphragm seals

Selection and Ordering data	Order code
Further designs	
Add "**-Z**" to Article No. and specify Order code.	
Factory certificates	
Quality inspection certificate (Five-step factory calibration) to IEC 60770-2	**C11**
Inspection certificate to EN 10204-3.1 - material of body and wetted parts	**C12**
Inspection certificate (EN 10204-3.1) - PMI test of pressure containing and wetted parts	**C15**
Certificate of FDA-approved fill oil (to EN10204-2.2)	**C17**
Factory certificate functional safety (SIL2/3), devices suitable for use according to IEC 61508 and IEC 61511 (includes SIL conformity declaration)	**C20**
Negative pressure services	
Negative pressure service (for gauge and absolute pressure transmitters)	**D81**
Negative pressure service (for differential pressure transmitters)	**D83**
Extended negative pressure service (for gauge and absolute pressure transmitters)	**D85**
Extended negative pressure service (for differential pressure transmitters)	**D88**
Capillary connection (only for 7MF0830)	
Single-side mounted at differential pressure transmitters at high-side	**S03**
Single-side mounted at differential pressure transmitters at low-side	**S04**
Cooling element	**S08**
Capillary coating	
PE protective tube	
1 m	**S10**
1,6 m	**S11**
2 m	**S12**
2,5 m	**S13**
3 m	**S14**
4 m	**S15**
5 m	**S16**
6 m	**S17**
7 m	**S18**
8 m	**S19**
9 m	**S20**
10 m	**S21**
PTFE protective tube	
1 m	**S40**
1,6 m	**S41**
2 m	**S42**
2,5 m	**S43**
3 m	**S44**
4 m	**S45**
5 m	**S46**
6 m	**S47**
7 m	**S48**
8 m	**S49**
9 m	**S50**
10 m	**S51**

Selection and Ordering data	Order code
Further designs	
Add "**-Z**" to Article No. and specify Order code.	
PVC protective tube	
1 m	**S70**
1,6 m	**S71**
2 m	**S72**
2,5 m	**S73**
3 m	**S74**
4 m	**S75**
5 m	**S76**
6 m	**S77**
7 m	**S78**
8 m	**S79**
9 m	**S80**
10 m	**S81**
Customer-specific tube length	
Customer-specific tube length (specify in plain text)	**Y44**
Specification of process conditions[1)]	
Ambient temperature range	
• -10 ... +50 °C (14 ... +122 °F) preset	**D66**
• -40 ... +50 °C (-40 ... +122 °F)	**D67**
• -10 ... +85 °C (14 ... +185 °F)	**D68**
Process temperature min. ... °C/(°F)/max. ... °C/(°F)	**Y50**

1) See also "Specification of process conditions for selection and ordering data", page 1/337.

© Siemens 2020

Dimensional drawings

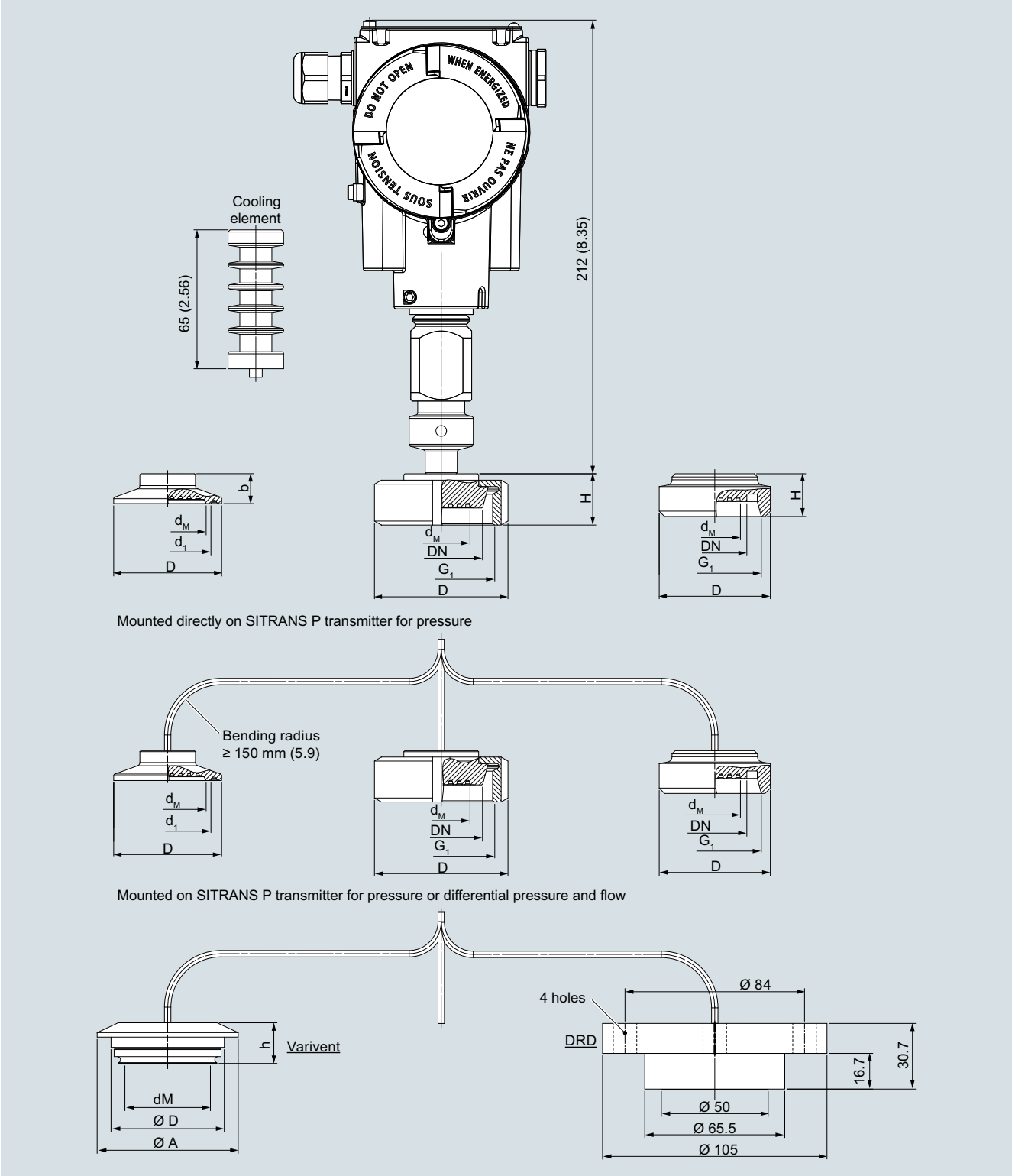

Quick-release diaphragm seal, dimensions in mm (inch)

© Siemens 2020

Connection to DIN 11851 with slotted union nut

Nominal diameter	Ø d_M	Ø D	H	G_1
	mm	mm	mm	mm
DN 25	25	63	36	Rd 52x1/6
DN 32	32	70	36	Rd 52x1/6
DN 40	40	78	36	Rd 65x1/6
DN 50	52	112	36	Rd 78x1/6
DN 65	65	112	36	Rd 95x1/6
DN 80	72	127	36	Rd 110x1/6

Connection to DIN 11851 with threaded socket

Nominal diameter	Ø d_M	H	G_1
	mm	mm	mm
DN 25	25	36	Rd 52x1/6
DN 32	32	36	Rd 52x1/6
DN 40	40	36	Rd 65x1/6
DN 50	52	36	Rd 78x1/6
DN 65	65	36	Rd 95x1/6
DN 80	72	36	Rd 110x1/6

Clamp connection to ISO 2852 for pipes to ISO 2037

Nominal diameter	Nominal pressure	d_M	d_1	b	D
		mm	mm	mm	mm
DN 25	PN 16	22.6	43.5	14	50.5
DN 38	PN 16	34	43.5	12	50.5
DN 51	PN 16	46	56.5	14	64
DN 63.5	PN 10	51	70.5	14	77.5
DN 76.1	PN 10	65	83.5	14	91

Clamp connection to DIN 32676 row C (Tri-Clamp) for pipes to ASME BPE

Nominal diameter	Nominal pressure	d_M	d_1	b	D
		mm (inch)	mm (inch)	mm (inch)	mm (inch)
1"	PN 25	22.6 (0.89)	43.5 (1.71)	14 (0.55)	50.5 (1.99)
1½"	PN 25	34 (1.34)	43.5 (1.71)	12 (0.47)	50.5 (1.99)
2"	PN 16	46 (1.81)	56.5 (2.22)	14 (0.55)	64 (2.52)
2½"	PN 16	51 (2.01)	70.5 (2.78)	14 (0.55)	77.5 (3.05)
3"	PN 16	65 (2.56)	83.5 (3.29)	14 (0.55)	91 (3.58)

Clamp connection to DIN 32676 row A (metric) for pipes to EN 10357 (DIN 11850)

Nominal diameter	Nominal pressure	Ø d_M	d_1	b	D
		mm	mm	mm	mm
DN 25	PN 25	22.6	43.5	14	50.5
DN 32	PN 25	27	43.5	12	50.5
DN 40	PN 25	34	43.5	12	50.5
DN 50	PN 16	46	56.5	14	64
DN 65	PN 16	65	83.5	14	91

Varivent

Nominal diameter	d_M	A	D	h
	mm (inch)	mm (inch)	mm (inch)	mm (inch)
DN 25, DN 32, 1", 1¼"	40 (1.57)	66 (2.6)	50 (1.97)	19 (0.75)
DN 40 ... 125, 1 ½" ... 6"	58 (2.28)	84 (3.331)	68 (2.68)	19 (0.75)

d_M Effective diaphragm diameter

© Siemens 2020

Overview

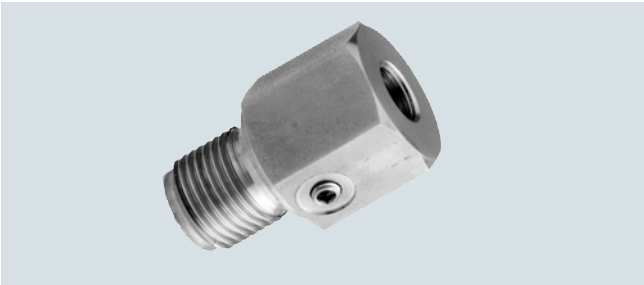

Miniature diaphragm seals

The miniature diaphragm seals are available for the SITRANS P320/420 pressure transmitter series.

Suitable for high pressures, contaminated, fibrous and viscous media in the chemical, paper, food and drink industries.

Design

- Flush-mounted diaphragm
- No dead spaces
- Fixed threaded stems

Dimensional drawings

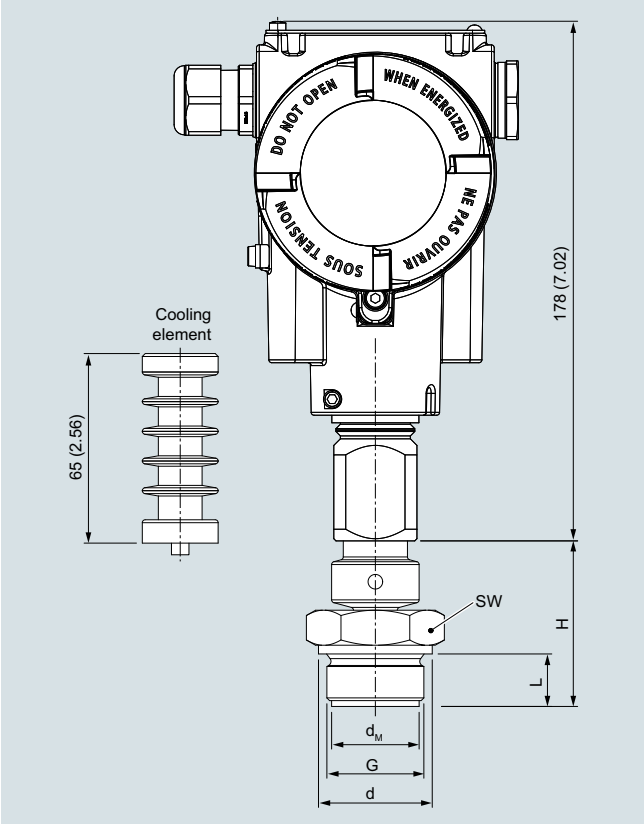

Miniature diaphragm seal, dimensions in mm (inch)

G	Ø d_M		SW		Ø d		L		H	
	mm	(inch)	mm	(inch)	mm	(inch)	mm	(inch)	mm	(inch)
G1B	25	(0.98)	41	(1.61)	39	(1.53)	28	(1.1)	56	(2.21)
G1½B	40	(1.57)	55	(2.17)	60	(2.36)	30	(1.18)	50	(1.97)
G2B	50	(1.97)	60	(2.36)	70	(2.76)	30	(1.18)	63	(2.48)

G	Ø d_M		SW		L		H	
	mm	(inch)	mm	(inch)	mm	(inch)	mm	(inch)
1"-NPT	27	(1.06)	41	(1.61)	25	(0.98)	40	(1.57)
1½"-NPT	34	(1.34)	55	(2.17)	26	(1.02)	45	(1.77)
2"-NPT	46	(1.81)	65	(2.56)	26	(1.02)	45	(1.77)

d_M: Effective diaphragm diameter

Technical specifications

Miniature diaphragm seals	
Measuring span when • G1B and 1"-NPT • G1½B and 1½"-NPT • G2B and 2"-NPT	 > 6 bar (> 87 psi) > 2 bar (> 29 psi) > 600 mbar (> 8.7 psi)
Filling liquid	Silicone oil M5 or food oil (FDA listed)
Material • Main body • Diaphragm	 Stainl. steel mat No. 1.4404/ 316L or Hastelloy C276, mat No. 2.4819 Stainl. steel mat No. 1.4404 / 316L or Hastelloy C276, mat. No. 2.4819
Maximum pressure	100% of nominal pressure of pressure transmitter, up to maximum of PN 400 (5802 psi) (depending on the seal used)
Temperature of use	Same as pressure transmitter
Temperature range of medium	Same as pressure transmitter
Max. recommended temperature of medium	150 °C (302 °F)
Weight • G1B and 1"-NPT • G1½B and 1½"-NPT • G2B and 2"-NPT	 Approx. 0.3 kg (approx. 0.66 lb) Approx. 0.5 kg (approx. 1.10 lb) Approx. 0.8 kg (approx. 1.76 lb)
Certificate and approvals	
Classification according to pressure equipment directive (DGRL 2014/68/EU)	For gases of fluid group 1 and liquids of fluid group 1; complies with requirements of article 4, paragraph 3 (sound engineering practice)

© Siemens 2020

Miniature diaphragm seals

Selection and Ordering data		Article No.	Order code
Miniature diaphragm seal			
directly connected to a			
• SITRANS P320/P420 transmitter for gauge ↗ pressure or absolute pressure (only together with negative pressure service), 7MF03../7MF04.. order separately Scope of delivery: 1 off		7MF0850-	
↗ Click on the Article No. for the online configuration in the PIA Life Cycle Portal.		■■■00-0■■0	■■■
Process connection			
Connection standard DIN 3852			
G ½"	PN 400	4ST	
G ¾"	PN 400	4SU	
G 1"	PN 400	4SV	
G 1½"	PN 400	4SW	
G 2"	PN 400	4SX	
Connection standard ASME B1.20.1			
½"-NPT-M	class 5800	5TS	
¾"-NPT-M	class 5800	5TT	
1"-NPT-M	class 5800	5TU	
1½"-NPT-M	class 5800	5TV	
2"-NPT-M	class 5800	5TW	
Other version Add Order code and plain text		9AA	H1Y
Filling liquid			
Silicone oil M5		A	
Food-grade oil (FDA listed)		E	
Other version Add Order code and plain text		Z	P1Y
Wetted parts material			
Stainless steel 316L without coating		A	
Hastelloy C276, 2.4819		J	

Selection and Ordering data	Order code
Further designs	
Add "**-Z**" to Article No. and specify Order code.	
Factory certificates	
Quality inspection certificate (Five-step factory calibration) to IEC 60770-2	**C11**
Inspection certificate to EN 10204-3.1 - material of body and wetted parts	**C12**
Manufacturer's declaration acc. to NACE (MR 0103-2012 and MR 0175-2009) (only together with seal diaphragm made of Hastelloy and stainless steel)	**C13**
Inspection certificate (EN 10204-3.1) - PMI test of pressure containing and wetted parts	**C15**
Certificate of FDA-approved fill oil (to EN10204-2.2)	**C17**
Factory certificate functional safety (SIL2/3), devices suitable for use according to IEC 61508 and IEC 61511 (includes SIL conformity declaration)	**C20**
Negative pressure services	
Negative pressure service	**D81**
Extended negative pressure service (for gauge and absolute pressure transmitters)	**D85**
Capillary connection	
Cooling element between transmitter and remote seal	**S08**
Customer-specific tube length	
Customer-specific tube length (specify in plain text)	**Y44**
Specification of process conditions[1)]	
Ambient temperature range	
• -10 ... +50 °C (14 ... +122 °F) preset	**D66**
• -40 ... +50 °C (-40 ... +122 °F)	**D67**
• -10 ... +85 °C (14 ... +185 °F)	**D68**
Process temperature min. ... °C/(°F)/max. ... °C/(°F)	**Y50**

1) See also "Specification of process conditions for selection and ordering data", page 1/337.

© Siemens 2020

Overview

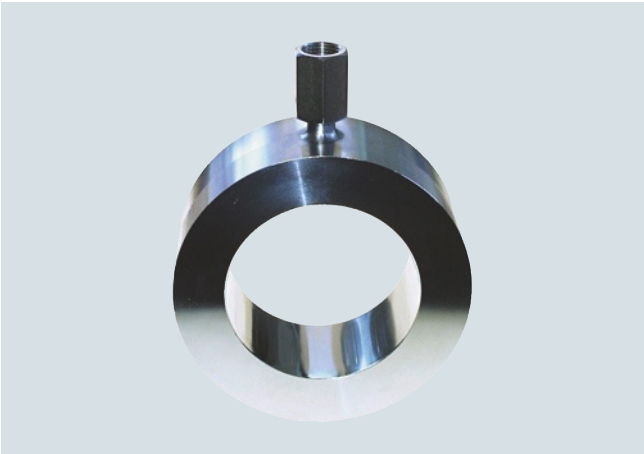

Inline seals for flange-mounting

The inline seal is completely integrated in the process line. It is particularly suitable for flowing and highly viscous media.

The inline seal consists of a cylindrical jacket into which a thin-walled pipe is welded. It is clamped directly between two flanges in the pipeline.

Design

- Inline seals for flange-mounting (flange design) to EN/ASME for SITRANS P pressure transmitters
  - For pressure: P300, DS III with HART, DS III with PROFIBUS PA and DS III with FOUNDATION Fieldbus
  - For differential pressure and flow: DS III with HART, DS III with PROFIBUS PA, DS III with FOUNDATION Fieldbus and P500
- Sealing surface to EN 1092-1 or ASME B16.5
- Connection to the transmitter directly or by means of a flexible capillary (max. 10 m long)
- See Technical data for details of materials used for the wetted parts
- Material used for the capillary, the guard sleeve, the seal's main body and the measuring cell: Stainless steel, mat.-No. 1.4571
- Filling liquid: Silicone oil, high-temperature oil, halocarbon oil, food oil (FDA listed) or glycerin/water (not suitable for uses in low-pressure range)

Function

The measured pressure is transferred from the diaphragm to the filling liquid and passes either directly or through the capillary to the measuring chamber of the pressure transmitter. The interior of the diaphragm seal and of the capillary, as well as the measuring chamber of the pressure transmitter, are filled gas-free by the filling liquid.

Note:

When operating in the low-pressure range, also during commissioning, it is recommended to use a vacuum-proof remote seal (see Selection and Ordering data).

Technical specifications

Inline seals for flange-mounting	
Nominal diameter	Nominal pressure
Connecting standard EN 1092-1	
• DN 25/40/50/65/80/100/125	PN 6 ... PN 100
Connecting standard ASME B16.5	
• 1, 1½, 2, 2½, 3, 4, 5 inch	Class 150 ... class 2500
Process connection	Flange to EN 1092-1 or ASME B 16.5
Sealing surface	• for stainless steel mat. no. 1.4404/316L according to EN 1092-1, form B1 or ASME B16.5 RF 125 ... 250 AA • for all other materials according to EN 1092-1, form B2 or ASME B16.5 RFSF
Materials	
• Main body	Stainless steel 1.4404/316L
• Diaphragm	Stainless steel 1.4404/316L
• Wetted parts	Stainless steel 1.4404/316L • Without coating • ECTFE coating (for vacuum on request) • PFA coating Monel 400, mat. No. 2.4360 Hastelloy C276, mat. No. 2.4819 Hastelloy C4, mat. No. 2.4602 Tantalum
• Capillary	Stainless steel, mat. No. 1.4404/316L
• Sheath	Spiral protective tube made of stainless steel, mat. No. 1.4301/316
Capillary	
• Length	Max. 10 m (32.8 ft)
• Internal diameter	2 mm (0.079 inch)
• Minimum bending radius	150 mm (5.9 inch)
Filling liquid	Silicone oil M5 Silicone oil M50 High-temperature oil Halocarbon oil Food oil (FDA listed)
Permissible ambient temperature	See pressure transmitters, see filling liquid
Weight	Approx. 4 kg (8.82 lb)
Certificates and approvals	
Classification according to pressure equipment directive (DGRL 2014/68/EU)	For gases of fluid group 1 and liquids of fluid group 1; complies with the requirements of article 4, paragraph 1 (appendix 1); assigned to category III, conformity evaluation module H by the TÜV Nord

© Siemens 2020

Inline seals in sandwich design

Selection and Ordering data	Article No.	Order code
Inline seal		
Sandwich type design, directly connected or connected with flexible capillary tube to a		
• SITRANS P320/P420 transmitter for gauge pressure or absolute pressure (only together with negative pressure service), 7MF03../7MF04.. order separately Scope of delivery: 1 off	↗ 7MF0900-	
• SITRANS P320/P420 transmitter for differential pressure and flow, 7MF03../7MF04.. order separately, Scope of delivery: 2 off	↗ 7MF0902-	
	■■■■-0■■0	■■■
↗ Click on the Article No. for the online configuration in the PIA Life Cycle Portal.		
Nominal diameter / **Nominal pressure**		
Connecting standard EN 1092-1		
DN 25 / PN 6 ... 100	0BP	
DN 40 / PN 6 ... 100	0DP	
DN 50 / PN 6 ... 100	0EP	
DN 65 / PN 6 ... 100	0FP	
DN 80 / PN 6 ... 100	0GP	
DN 100 / PN 6 ... 100	0HP	
DN 125 / PN 6 ... 100	0JP	
Connecting standard ASME B16.5		
1 inch / class 150 ... 2500	1KX	
1½ inch / class 150 ... 2500	1LX	
2 inch / class 150 ... 2500	1MX	
2½ inch / class 150 ... 2500	1NX	
3 inch / class 150 ... 2500	1PX	
4 inch / class 150 ... 2500	1QX	
5 inch / class 150 ... 2500	1RX	
Other version Add Order code and plain text	9AA	H1Y
Transmitter connection		
Without capillary tube, direct mount straight connection (for gauge pressure)	00	
Without capillary tube, direct mount connection via 90°-bow (for gauge pressure)	01	
Connection via capillary tube Length of capillary		
1 m	10	
1,6 m	11	
2 m	12	
2,5 m	13	
3 m	14	
4 m	15	
5 m	16	
6 m	17	
7 m	18	
8 m	20	
9 m	21	
10 m	22	
11 m (only for 7MF0900)	23	
12 m (only for 7MF0900)	24	
13 m (only for 7MF0900)	25	
14 m (only for 7MF0900)	26	
15 m (only for 7MF0900)	27	
Other version Add Order code and plain text	98	L1Y

Selection and Ordering data	Article No.	Order code
Inline seal		
Sandwich type design, directly connected or connected with flexible capillary tube to a		
• SITRANS P320/P420 transmitter for gauge pressure or absolute pressure (only together with negative pressure service), 7MF03../7MF04.. order separately Scope of delivery: 1 off	7MF0900-	
• SITRANS P320/P420 transmitter for differential pressure and flow, 7MF03../7MF04.. order separately, Scope of delivery: 2 off	7MF0902-	
	■■■■-0■■0	■■■
Filling liquid		
Silicone oil M50	B	
High-temperature oil	C	
Silicone oil M5	A	
Food-grade oil (FDA listed)	E	
Halocarbon oil	D	
Other version Add Order code and plain text	Z	P1Y
Wetted parts materials		
Stainless steel 316L		
• Without coating	A	
• With PFA coating	D	
• With ECTFFE coating	F	
Monel 400, 2.4360	G	
Hastelloy C276, 2.4819	J	
Tantalum	K	
Hastelloy C4, 2.4610	U	
Other version Add Order code and plain text	Z	Q1Y

© Siemens 2020

Selection and Ordering data	Order code
Further designs	
Add "**-Z**" to Article No. and specify Order code.	
Factory certificates	
Quality inspection certificate (Five-step factory calibration) to IEC 60770-2	**C11**
Inspection certificate to EN 10204-3.1 - material of body and wetted parts	**C12**
Manufacturer's declaration acc. to NACE (MR 0103-2012 and MR 0175-2009) (only together with seal diaphragm made of Hastelloy and stainless steel)	**C13**
Inspection certificate (EN 10204-3.1) - PMI test of pressure containing and wetted parts	**C15**
Certificate of FDA-approved fill oil (to EN10204-2.2)	**C17**
Factory certificate functional safety (SIL2/3), devices suitable for use according to IEC 61508 and IEC 61511 (includes SIL conformity declaration)	**C20**
Accessories	
Spark arrestor (for gauge and absolute pressure transmitters)	**D61**
Spark arrestor (for differential pressure and level transmitters)	**D62**
Low-temperature version (for Silicon Oil M50 only)	**D67**
Negative pressure services	
Negative pressure service (for gauge and absolute pressure transmitters)	**D81**
Negative pressure service (for differential pressure transmitters)	**D83**
Extended negative pressure service (for gauge and absolute pressure transmitters)	**D85**
Extended negative pressure service (for differential pressure transmitters)	**D88**
General product approvals without explosion proof approvals	
Oil-and grease-free cleaned version (for O_2-appl. including certificate EN10204-2.2 (only with fill fluid Halocarbon oil max. temperature 60 °C and max. pressure 50 bar)	**E80**
Oil-and grease-free cleaned version (not for O_2-appl. including certificate EN10204-2.2 (only with fill fluid Halocarbon oil)	**E87**
Sealing surface	
Sealing surface smooth, form B2/EN1092-1 resp. RFSF/ANSI B16.5 (wetted parts 316L only)	**M50**
Sealing surface groove to EN1092-1, form D (instead of sealing surface B1, wetted parts 316L only)	**M54**
Sealing surface RJF (groove) to ASME B16.5 (instead of sealing surface RF 125...250AA, wetted parts 316L only)	**M64**
Sealing surface with tongue to EN1092-1, form C (wetted parts 316L only)	
• DN 25	**M70**
• DN 40	**M71**
• DN 50	**M72**
• DN 80	**M73**
• DN 100	**M74**
• DN 125	**M75**
Sealing surface with spigot to EN1092-1, form E (wetted parts 316L only)	
• DN 25	**M76**
• DN 40	**M77**
• DN 50	**M78**
• DN 80	**M79**
• DN 100	**M80**
• DN 125	**M81**

Selection and Ordering data	Order code
Further designs	
Add "**-Z**" to Article No. and specify Order code.	
Sealing surface with recess to EN1092-1, form F (wetted parts 316L only)	
• DN 25	**M82**
• DN 40	**M83**
• DN 50	**M84**
• DN 80	**M85**
• DN 100	**M86**
• DN 125	**M87**
Capillary connection	
For 7MF0900	
Single-side mounted at differential pressure transmitters at high-side	**S03**
Single-side mounted at differential pressure transmitters at low-side	**S04**
cooling element	**S08**
Capillary coating	
PE protective tube	
1 m	**S10**
1,6 m	**S11**
2 m	**S12**
2,5 m	**S13**
3 m	**S14**
4 m	**S15**
5 m	**S16**
6 m	**S17**
7 m	**S18**
8 m	**S19**
9 m	**S20**
10 m	**S21**
11 m (only for 7MF0902)	**S22**
12 m (only for 7MF0902)	**S23**
13 m (only for 7MF0902)	**S24**
14 m (only for 7MF0902)	**S25**
15 m (only for 7MF0902)	**S26**
PTFE protective tube	
1 m	**S40**
1,6 m	**S41**
2 m	**S42**
2,5 m	**S43**
3 m	**S44**
4 m	**S45**
5 m	**S46**
6 m	**S47**
7 m	**S48**
8 m	**S49**
9 m	**S50**
10 m	**S51**
11 m (only for 7MF0902)	**S52**
12 m (only for 7MF0902)	**S53**
13 m (only for 7MF0902)	**S54**
14 m (only for 7MF0902)	**S55**
15 m (only for 7MF0902)	**S56**

© Siemens 2020

Inline seals in sandwich design

Selection and Ordering data	Order code
Further designs	
Add "**-Z**" to Article No. and specify Order code.	
PVC protective tube	
1 m	**S70**
1,6 m	**S71**
2 m	**S72**
2,5 m	**S73**
3 m	**S74**
4 m	**S75**
5 m	**S76**
6 m	**S77**
7 m	**S78**
8 m	**S79**
9 m	**S80**
10 m	**S81**
11 m (only for 7MF0902)	**S82**
12 m (only for 7MF0902)	**S83**
13 m (only for 7MF0902)	**S84**
14 m (only for 7MF0902)	**S85**
15 m (only for 7MF0902)	**S86**
Customer-specific tube length	
Customer-specific tube length (specify in plain text)	**Y44**
Specification of process conditions[1)]	
Ambient temperature range	
• -10 ... +50 °C (14 ... +122 °F) preset	**D66**
• -40 ... +50 °C (-40 ... +122 °F)	**D67**
• -10 ... +85 °C (14 ... +185 °F)	**D68**
Process temperature min. ... °C/(°F)/max. ... °C/(°F)	**Y50**

1) See also "Specification of process conditions for selection and ordering data", page 1/337.

© Siemens 2020

Dimensional drawings

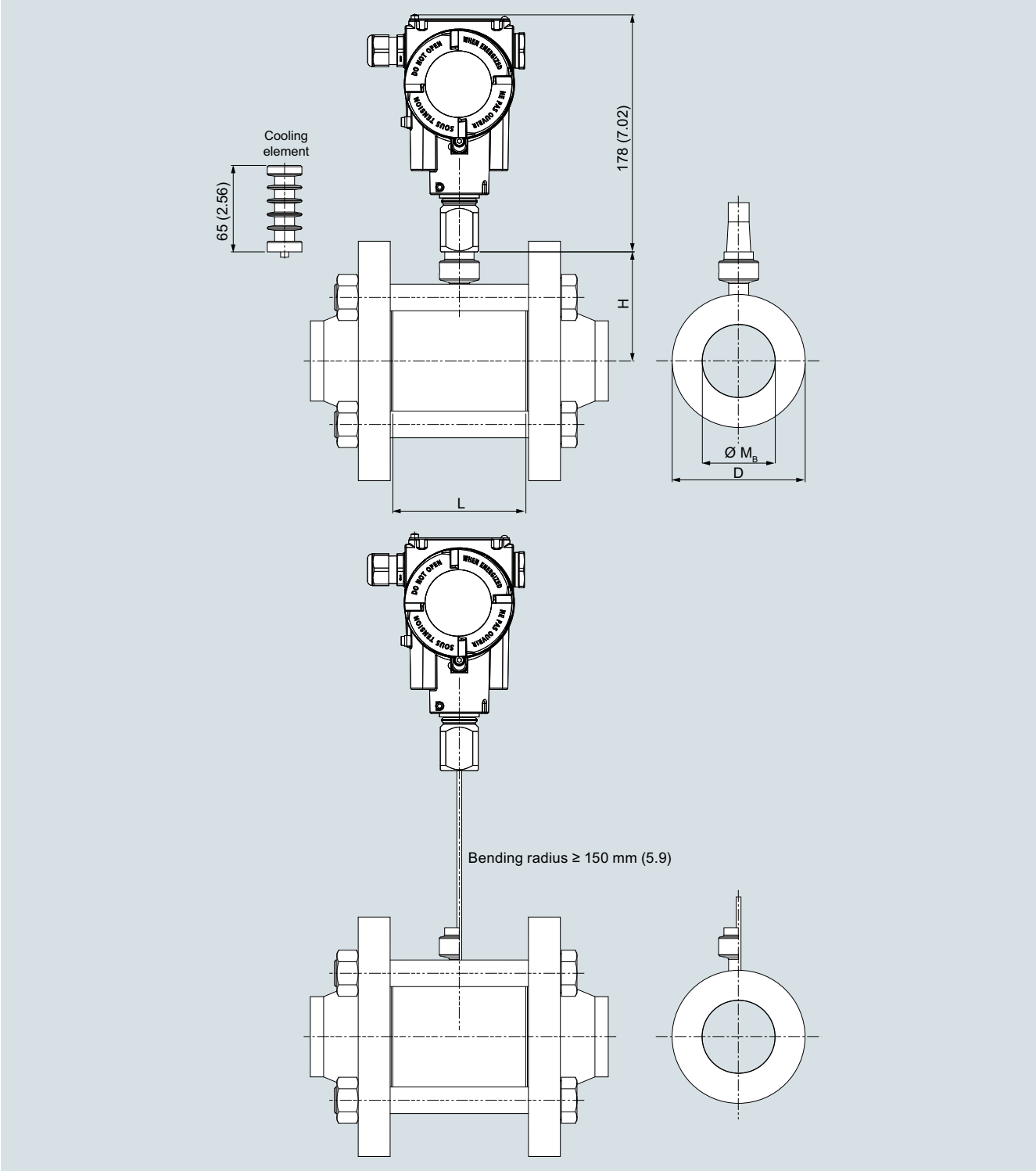

Inline seal for flange-mounting, connected to SITRANS P pressure transmitter, dimensions in mm (inch)

© Siemens 2020

Inline seals in sandwich design

Connection to EN 1092-1

DN mm	PN bar	D mm	Mb mm	L mm	H mm
25	6 ... 100	68	28.5	60	81
40		88	43.1	60	91
50		100	54.5	60	93
65		120	70.3	60	107
80		138	82.5	60	116
100		160	107.1	60	127
125		188	127	60	141

Connection to ASME B16.5

DN (inch)	Class	D mm (inch)	Mb mm (inch)	L mm (inch)	H mm (inch)
1	150 ... 2500	50 (1.97)	28.5 (1.12)	60 (2.36)	72 (2.83)
1½	150 ... 2500	73.5 (2.89)	43.1 (1.70)	60 (2.36)	84 (3.31)
2	150 ... 2500	91.9 (3.62)	54.5 (2.15)	60 (2.36)	93 (3.66)
2½	150 ... 2500	104.6 (4.12)	70.3 (2.77)	60 (2.36)	99 (3.9)
3	150 ... 2500	127 (5)	82.5 (3.25)	60 (2.36)	110 (4.33)
4	150 ... 2500	157.2 (6.19)	107.1 (4.22)	60 (2.36)	125 (4.92)
5	150 ... 2500	188 (7.4)	127 (5)	60 (2.36)	141 (5.55)

© Siemens 2020

Overview

Quick-release inline seals, to DIN 11851 with threaded socket

Quick-release inline seals, with clamp connection

Quick-release inline seals for pressure are available for the following SITRANS P pressure transmitter series:

- P300
- DS III with HART
- DS III with PROFIBUS PA
- DS III with FOUNDATION Fieldbus

Application

The quick-release inline seal is a special design for flowing and high-viscosity media. Because it is completely integrated in the process line, there are no turbulences, dead spaces or other obstacles in the flow direction. The medium flows almost unhindered through the inline seal and causes self-cleaning of the sample chamber. The inline seal is also piggable.

Design

The quick-release clamp is available in two versions:

- DIN 11851 with threaded socket
- Clamp connection

The inline seal is connected to the pressure transmitter either directly or by way of a capillary.

Function

The measured pressure is transferred from the diaphragm, mounted on the inner circumference of the inline seal, to the filling liquid and then passes through the capillary to the measuring chamber of the pressure transmitter. The interior of the inline seal and of the capillary, as well as the measuring chamber of the pressure transmitter, are filled gas-free by the filling liquid.

Note:

When operating in the low-pressure range, also during commissioning, it is recommended to use a vacuum-proof pressure transmitter (see Selection and Ordering data).

Technical specifications

Quick-release inline seals for gauge pressure		
Connection	Nominal diameter	Nominal pressure
• Standard to DIN 11851 with thread	DN 25/32/40	PN 40
	DN 50/65/80	PN 25
• Standard Clamp ISO 2852	DN 25/38/51	PN 16
	DN 63.5/76.1	PN 10
• Standard Clamp DIN 32676, row C Tri-clamp	1, 1½ inch	PN 25
	2, 2½ inch	PN 16
	3 inch	PN 10
• Standard Clamp DIN 32676, row A metric	DN 25/32/40	PN 25
	DN 50	PN 16
	DN 65	PN 10
Material		
• Main body	Stainless steel 1.4404/316L	
• Diaphragm	Stainless steel 1.4404/316L	
Capillary		
• Length	Max. 10 m (32.8 ft)	
• Internal diameter	2 mm (0.079 inch)	
• Minimum bending radius	150 mm (5.9 inch)	
• Sheath	Spiral protective tube made of stainless steel, mat. No. 1.4404/316L	
Filling liquid	• Food oil (FDA listed)	
Permissible ambient temperature	Dependent on the pressure transmitter and the filling liquid of the remote seal More information can be found in the technical data of the pressure transmitters and in the section "Technical data of filling liquid" in the Technical description to the remote seals	
Weight	Approx. 4 kg (approx. 8.82 lb)	
Certificate and approvals		
Classification according to pressure equipment directive (DGRL 2014/68/EU)	For gases of fluid group 1 and liquids of fluid group 1; complies with the requirements of article 4, paragraph 1 (appendix 1); assigned to category III, conformity evaluation module H by the TÜV Nord	
EHEDG	Complies with EHEDG recommendations	

© Siemens 2020

Quick-release inline seals

Selection and Ordering data	Article No.	Order code
Quick release inline-seal		
Flange type design, with flexible capillary tube or directly connected to a		
• SITRANS P320/P420 transmitter for gauge ↗ pressure or absolute pressure (only together with negative pressure service), 7MF03../7MF04.. order separately Scope of delivery: 1 off	7MF0930-	
	■■■■■-0■A0	■■■
↗ Click on the Article No. for the online configuration in the PIA Life Cycle Portal.		
Nominal diameter / **Nominal pressure**		
Connection standard DIN 11851 with thread		
DN 25 / PN 40	1BM	
DN 32 / PN 40	1CD	
DN 40 / PN 40	1DM	
DN 50 / PN 25	1EK	
DN 65 / PN 25	1FL	
DN 80 / PN 25	1GK	
Connection standard Clamp ISO 2852		
DN 25 / PN 16	2BK	
DN 38 / PN 16	2CQ	
DN 51 / PN 16	2FH	
DN 63,5 / PN 10	2FJ	
DN 76,1 / PN 10	2GJ	
Connection standard Clamp DIN 32676, row C Tri-clamp		
DN 1" / PN 25	3KV	
DN 1½" / PN 25	3LV	
DN 2" / PN 16	3MV	
DN 2½" / PN 16	3NV	
DN 3" / PN 10	3PV	
Connection standard Clamp DIN 32676, row A metric		
DN 25 / PN 25	4BL	
DN 32 / PN 25	4CC	
DN 40 / PN 25	4DL	
DN 50 / PN 16	4EJ	
DN 65 / PN 10	4FK	
Other version Add Order code and plain text	9AA	H1Y

Selection and Ordering data	Article No.	Order code
Quick release inline-seal		
Flange type design, with flexible capillary tube or directly connected to a		
• SITRANS P320/P420 transmitter for gauge pressure or absolute pressure (only together with negative pressure service), 7MF03../7MF04.. order separately Scope of delivery: 1 off	7MF0930-	
	■■■■■-0■A0	■■■
Transmitter connection		
Without capillary tube, direct mount straight connection (for gauge pressure)	00	
Connection via capillary tube Length of capillary		
1 m	10	
1,6 m	11	
2 m	12	
2,5 m	13	
3 m	14	
4 m	15	
5 m	16	
6 m	17	
7 m	18	
8 m	20	
9 m	21	
10 m	22	
Other version Add Order code and plain text	98	L1Y
Filling liquid		
Food-grade oil (FDA listed)	E	
Other version Add Order code and plain text	Z	P1Y

© Siemens 2020

Selection and Ordering data	Order code
Further designs	
Add "**-Z**" to Article No. and specify Order code.	
Factory certificates	
Quality inspection certificate (Five-step factory calibration) to IEC 60770-2	**C11**
Inspection certificate to EN 10204-3.1 - material of body and wetted parts	**C12**
Inspection certificate (EN 10204-3.1) - PMI test of pressure containing and wetted parts	**C15**
Certificate of FDA-approved fill oil (to EN10204-2.2)	**C17**
Factory certificate functional safety (SIL2/3), devices suitable for use according to IEC 61508 and IEC 61511 (includes SIL conformity declaration)	**C20**
Negative pressure services	
Negative pressure service (for gauge and absolute pressure transmitters)	**D81**
Extended negative pressure service (for gauge and absolute pressure transmitters)	**D85**
Capillary connection	
Single-side mounted at differential pressure transmitters at high-side	**S03**
Single-side mounted at differential pressure transmitters at low-side	**S04**
cooling element	**S08**
Capillary coating	
PE protective tube	
1 m	**S10**
1,6 m	**S11**
2 m	**S12**
2,5 m	**S13**
3 m	**S14**
4 m	**S15**
5 m	**S16**
6 m	**S17**
7 m	**S18**
8 m	**S19**
9 m	**S20**
10 m	**S21**
PTFE protective tube	
1 m	**S40**
1,6 m	**S41**
2 m	**S42**
2,5 m	**S43**
3 m	**S44**
4 m	**S45**
5 m	**S46**
6 m	**S47**
7 m	**S48**
8 m	**S49**
9 m	**S50**
10 m	**S51**

Selection and Ordering data	Order code
Further designs	
Add "**-Z**" to Article No. and specify Order code.	
PVC protective tube	
1 m	**S70**
1,6 m	**S71**
2 m	**S72**
2,5 m	**S73**
3 m	**S74**
4 m	**S75**
5 m	**S76**
6 m	**S77**
7 m	**S78**
8 m	**S79**
9 m	**S80**
10 m	**S81**
Customer-specific tube length	
Customer-specific tube length (specify in plain text)	**Y44**
Specification of process conditions[1)]	
Ambient temperature range	
• -10 ... +50 °C (14 ... +122 °F) preset	**D66**
• -40 ... +50 °C (-40 ... +122 °F)	**D67**
• -10 ... +85 °C (14 ... +185 °F)	**D68**
Process temperature min. ... °C/(°F)/max. ... °C/(°F)	**Y50**

1) See also "Specification of process conditions for selection and ordering data", page 1/337.

© Siemens 2020

Dimensional drawings

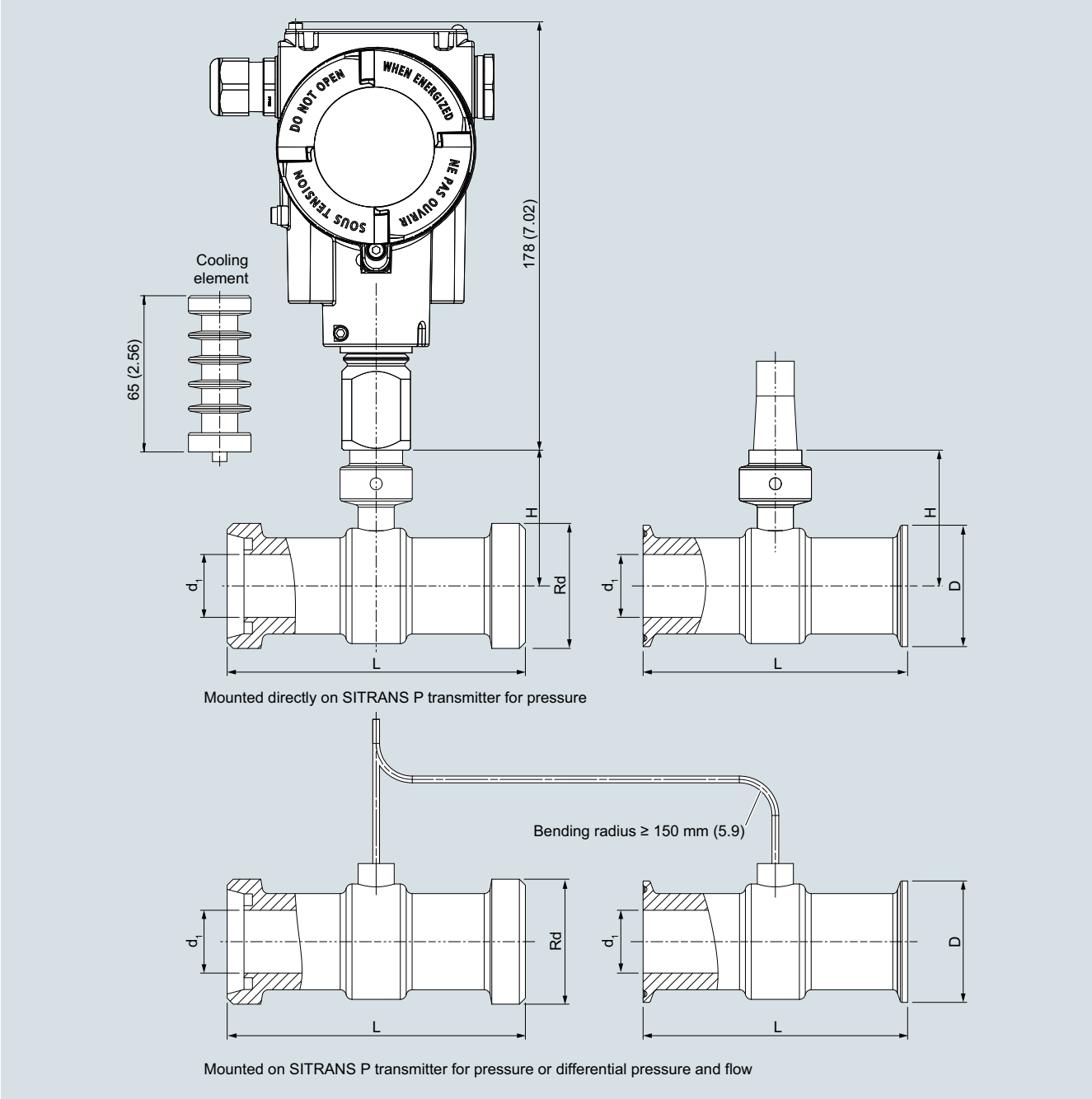

Quick-release inline seal, dimensions in mm (inch)

© Siemens 2020

Inline seals for pipes according to EN 10357 (DIN 11851)

				Food connections			
				DIN 11851		DIN 32676	
	Length	Inner diameter	Connection height	Nominal pressure	Round thread connection to DIN 11851	Nominal pressure	Clamp connection to DIN 32676
Nominal diameter	L (mm)	di (mm)	h (mm)		Thread Rd		D (mm)
DN 10	96	10	27.5	PN 40	28 x 1/8"	PN 16	34
DN 15	150	16	12	PN 40	34 x 1/8"	PN 16	34
DN 25	110	26	21	PN 40	52 x 1/6"	PN 16	50.5
DN 32	110	32	26	PN 40	58 x 1/6"	PN 16	50.5
DN 40	110	38	28.5	PN 40	65 x 1/6"	PN 16	50.5
DN 50	110	50	34	PN 25	78 x 1/6"	PN 16	64
DN 65	110	66	42	PN 25	95 x 1/6"	PN 10	91
DN 80	60	81	47.5	PN 25	110 x 1/4"	PN 10	106
DN 100	60	100	60	PN 25	130 x 1/4"	PN 10	119

Inline seals for pipes according to BS 4825 Part 3 and O.D. Tube (suitable for pipes according to ASME-BPE)

					Food connection			
					IDF to ISO 2853		Clamp connection to ISO 2852	
		Length	Inner diameter	Connection height	Nominal pressure	IDF-Thread to ISO 2853	Nominal pressure	Clamp connection to ISO 2852
Nominal diameter		L (mm)	di (mm)	h (mm)		IDF-thread (Tr)		D (mm)
1 inch	25.4 mm	110	22.2	21	PN 40	37 x 3.175	PN 16	50.5
1½ inch	38 mm	110	34.8	28.5	PN 40	50 x 3.175	PN 16	50.5
2 inch	51 mm	110	47.8	34	PN 25	64 x 3.175	PN 16	64
1½ inch	63.5 mm	110	60.3	38	PN 25	77.5 x 3.175	PN 16	77.5
3 inch	76.1 mm	60	72.9	44.5	PN 25	91 x 3.175	PN 10	91
4 inch	101.6 mm	60	97.6	59.5	PN 25	118 x 3175	PN 10	119

© Siemens 2020

Overview

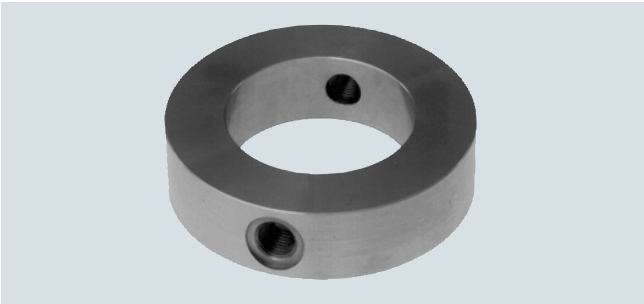

Flushing ring

Flushing rings are required for flange-mounted and sandwich-type remote seals (Article No. 7MF0800 ... 7MF0814) if the danger exists that the process conditions and the geometry of the connection could cause the medium to form deposits or blockages.

The flushing ring is clamped between the process flange and the remote seal.

Deposits can be flushed away from the diaphragm through the holes in the side, or the pressure volume can be vented. Different nominal diameters and forms permit adaptation to the respective process flange.

Process connection

For flanges to EN and ASME:
DN 50, 80, 100, 125; PN 16 ... 100 or
DN 2 inch, 3 inch, 4 inch, 5 inch; Class 150 ... 600

Standard design

Material: CrNi-Stahl, mat. No. 1.4404/316L
Sealing faces and flushing holes: See Selection and Ordering data

Design

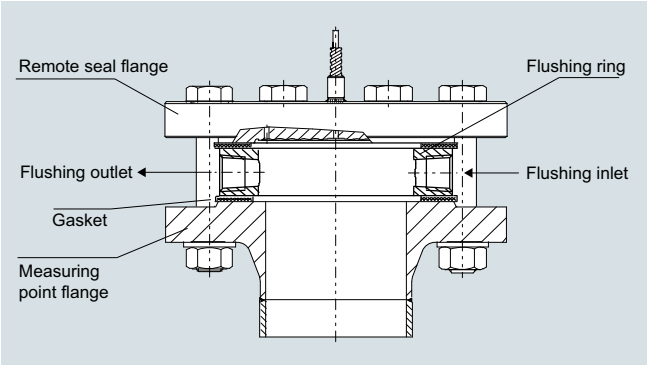

Installation example

Technical specifications

Flushing ring for remote seals of sandwich and flange design	
Nominal diameter	Nominal pressure
• DN 50	PN 16 ... PN 100
• DN 80	PN 16 ... PN 100
• DN 100	PN 16 ... PN 100
• DN 125	PN 16 ... PN 100
• 2 inch	Class 150 ... class 600
• 3 inch	Class 150 ... class 600
• 4 inch	Class 150 ... class 600
• 5 inch	Class 150 ... class 600
Sealing surface	
• To EN 1092-1	Form B1
	Form B2
	Form D/Form D
	Form C/Form C
	Form C/Form C
	Form E
	Form F
• To ASME B16.5	RF 125 ... 250 AA
	RFSF
	RJF ring groove
Flushing holes (2 off), female thread	• G¼
	• G½
	• ¼-18 NPT
	• ½-14 NPT
Material	Stainless steel 1.4404/316L

© Siemens 2020

Selection and Ordering data

		Article No.Ord. code
Flushing ring		↗ 7MF4925-
for remote seals 7MF0800 to 7MF0814		1 ■■■■ ■■■
↗ Click on the Article No. for the online configuration in the PIA Life Cycle Portal.		
Nom. diam.	**Nominal pressure**	
• DN 50	PN 16 ... PN 100	A
• DN 80	PN 16 ... PN 100	B
• DN 100	PN 16 ... PN 100	C
• DN 125	PN 16 ... PN 100	D
• 2 inch	Class 150 ... 600	G
• 3 inch	Class 150 ... 600	H
• 4 inch	Class 150 ... 600	J
• 5 inch	Class 150 ... 600	K
Only for RJF ring groove, 7MF4925-1*R....:		
• 2 inch	Class 150	N R
• 3 inch	Class 150	P R
• 4 inch	Class 150	Q R
• 5 inch	Class 150	R R
• 2 inch	Class 300 ... 600	U R
• 3 inch	Class 300 ... 600	V R
• 4 inch	Class 300 ... 600	W R
• 5 inch	Class 300 ... 600	X R
Other version Add Order code and plain text: Nominal diameter: ...; Nominal pressure: ...		Z J 1 Y
Sealing surface		
• EN 1092-1		
- Form B1		A
- Form B2		C
- Form C/Form C		D
- Form D/Form C		E
- Form D/Form D		F
- Form E		G
- Form F		H
• ASME B16.5		
- RF 125 ... 250 AA		M
- RFSF		Q
- RJF ring groove		R
Other version Add Order code and plain text: Sealing surface: ...		Z K 1 Y
Flushing holes (2 off)		
• Female thread G¼		1
• Female thread G½		2
• Female thread ¼-18 NPT		3
• Female thread ½-14 NPT		4
Material		
• Stainless steel 316L		0
Other version Add Order code and plain text: Material: ...		9 M 1 Y
Further designs Please add "**-Z**" to Article No. and specify Order code.		Order code
Inspection certificate to EN 10204, section 3.1		C12

Dimensional drawings

Connection according to EN 1092-1

Form B1 and form B2

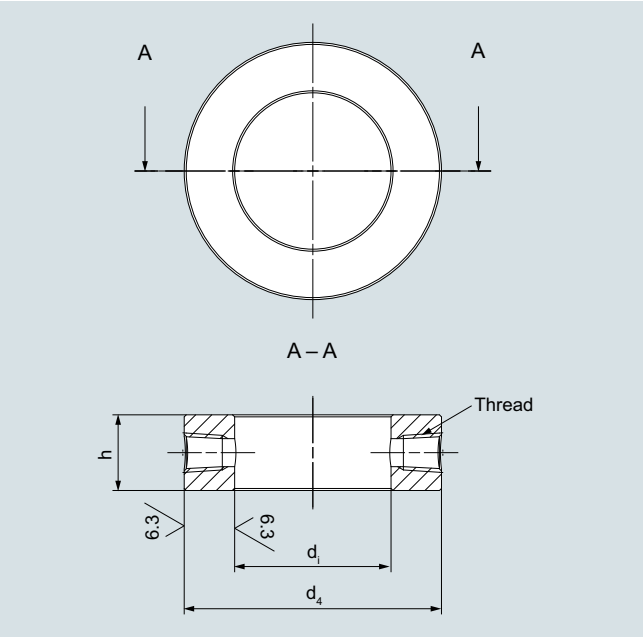

Flushing ring; sealing surface (EN 1092-1), form B1 and form B2

DN	PN	Thread	d_4	d_i	h	Weight
mm	bar		Ø in mm (inch)	Ø in mm (inch)	Ø in mm (inch)	kg (lb)
50	16 … 100	¼ NPT	102 (4.02)	62 (2.44)	30 (1.18)	1.24 (2.73)
80	16 … 100	¼ NPT	138 (5.43)	92 (3.62)	30 (1.18)	1.99 (4.39)
100	16 … 100	¼ NPT	162 (6.38)	92 (3.62)	30 (1.18)	3.35 (7.39)
125	16 … 100	¼ NPT	188 (7.40)	132 (5.2)	30 (1.18)	3.38 (7.45)
50	16 … 100	½ NPT	102 (4.02)	62 (2.44)	30 (1.18)	1.24 (2.73)
80	16 … 100	½ NPT	138 (5.43)	92 (3.62)	30 (1.18)	1.99 (4.39)
100	16 … 100	½ NPT	162 (6.38)	92 (3.62)	30 (1.18)	3.35 (7.39)
125	16 … 100	½ NPT	188 (7.40)	132 (5.2)	30 (1.18)	3.38 (7.45)

© Siemens 2020

Flushing rings for diaphragm seals

Form D/form C

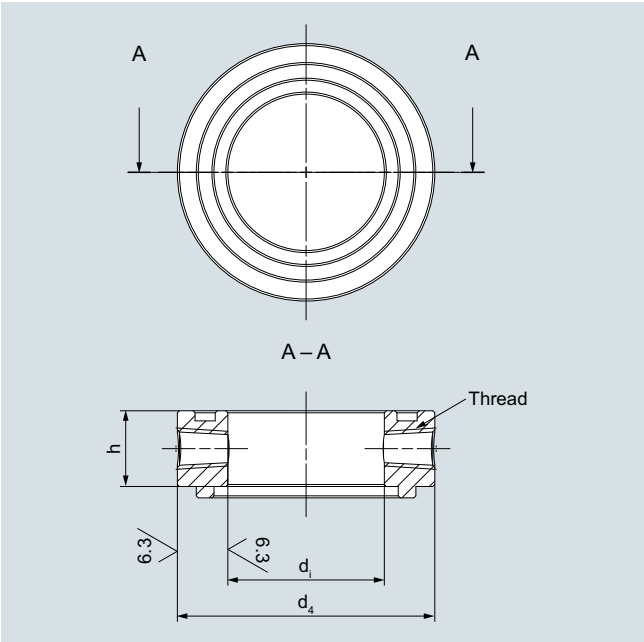

Flushing ring; sealing surface (EN 1092-1), form D/form C

DN	PN	Thread	d_4	d_i	h	Weight
mm	bar		Ø in mm (inch)	Ø in mm (inch)	Ø in mm (inch)	kg (lb)
50	16 … 100	¼ NPT	102 (4.02)	62 (2.44)	35.5 (1.40)	1.46 (3.22)
80	16 … 100	¼ NPT	138 (5.43)	92 (3.62)	35.5 (1.40)	2.36 (5.2)
100	16 … 100	¼ NPT	162 (6.38)	92 (3.62)	35.5 (1.40)	3.96 (8.73)
125	16 … 100	¼ NPT	188 (7.40)	132 (5.2)	35.5 (1.40)	4.00 (8.82)
50	16 … 100	½ NPT	102 (4.02)	62 (2.44)	40.5 (1.595)	1.67 (3.68)
80	16 … 100	½ NPT	138 (5.43)	92 (3.62)	40.5 (1.595)	2.69 (5.93)
100	16 … 100	½ NPT	162 (6.38)	92 (3.62)	40.5 (1.595)	4.52 (9.97)
125	16 … 100	½ NPT	188 (7.40)	132 (5.2)	40.5 (1.595)	4.56 (10.05)

Form D/form D

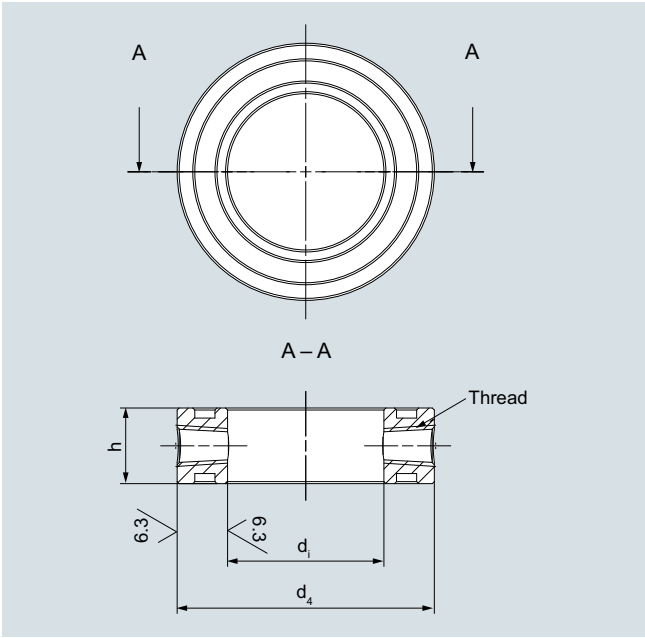

Flushing ring; sealing surface (EN 1092-1), form D/form D

DN	PN	Thread	d_4	d_i	h	Weight
mm	bar		Ø in mm (inch)	Ø in mm (inch)	Ø in mm (inch)	kg lb)
50	16 … 100	¼ NPT	102 (4.02)	62 (2.44)	40 (1.58)	1.65 (3.64)
80	16 … 100	¼ NPT	138 (5.43)	92 (3.62)	40 (1.58)	2.66 (5.86)
100	16 … 100	¼ NPT	162 (6.38)	92 (3.62)	40 (1.58)	4.47 (9.86)
125	16 … 100	¼ NPT	188 (7.40)	132 (5.2)	40 (1.58)	4.50 (9.92)
50	16 … 100	½ NPT	102 (4.02)	62 (2.44)	40 (1.58)	1.65 (3.64)
80	16 … 100	½ NPT	138 (5.43)	92 (3.62)	40 (1.58)	2.66 (5.86)
100	16 … 100	½ NPT	162 (6.38)	92 (3.62)	40 (1.58)	4.47 (9.86)
125	16 … 100	½ NPT	188 (7.40)	132 (5.2)	40 (1.58)	4.50 (9.92)

© Siemens 2020

Form C/form C and form E

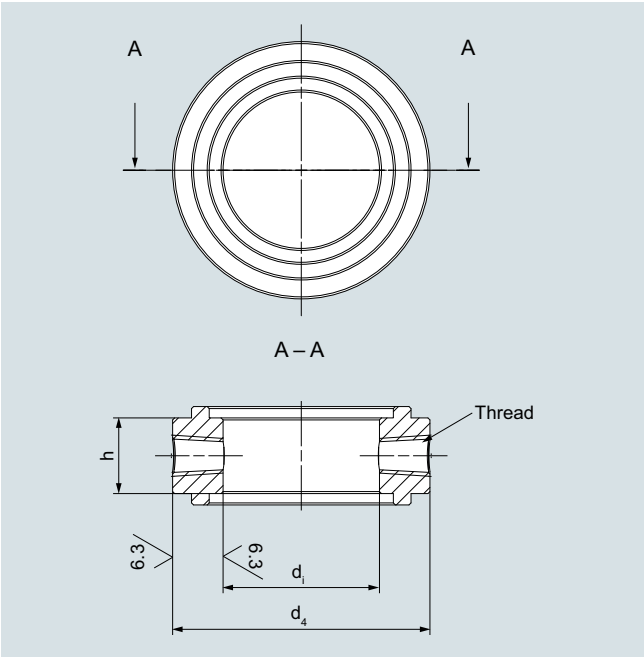

Flushing ring; sealing surface (EN 1092-1), form C/form C

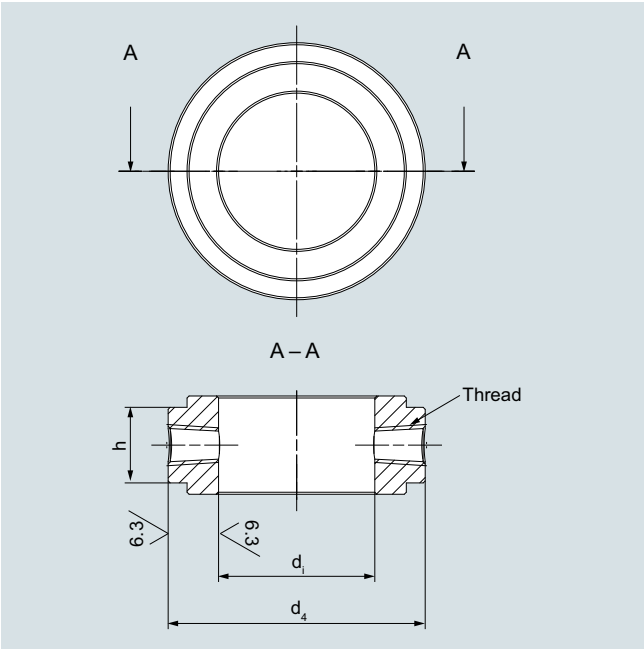

Flushing ring; sealing surface (EN 1092-1), form E

DN	PN	Thread	d_4	d_i	h	x	f3	Weight
mm	bar		Ø in mm (inch)	Ø in mm (inch)	Ø in mm (inch)	Ø in mm (inch)	Ø in mm (inch)	kg (lb)
50	16 … 100	¼ NPT	102 (4.02)	62 (2.44)	31 (1.22)	87 (3.43)	4.5 (0.18)	1.49 (3.28)
80	16 … 100	¼ NPT	138 (5.43)	92 (3.62)	31 (1.22)	120 (4.72)	4.5 (0.18)	2.40 (5.29)
100	16 … 100	¼ NPT	162 (6.38)	92 (3.62)	30 (1.18)	149 (5.87)	5 (0.2)	4.21 (9.28)
125	16 … 100	¼ NPT	188 (7.40)	132 (5.2)	30 (1.18)	175 (6.89)	5 (0.2)	4.21 (9.28)
50	16 … 100	½ NPT	102 (4.02)	62 (2.44)	31 (1.22)	87 (3.43)	4.5 (0.18)	1.49 (3.28)
80	16 … 100	½ NPT	138 (5.43)	92 (3.62)	31 (1.22)	120 (4.72)	4.5 (0.18)	2.40 (5.29)
100	16 … 100	½ NPT	162 (6.38)	92 (3.62)	30 (1.18)	149 (5.87)	5 (0.2)	4.21 (9.28)
125	16 … 100	½ NPT	188 (7.40)	132 (5.2)	30 (1.18)	175 (6.89)	5 (0.2)	3.38 (7.45)

Form F

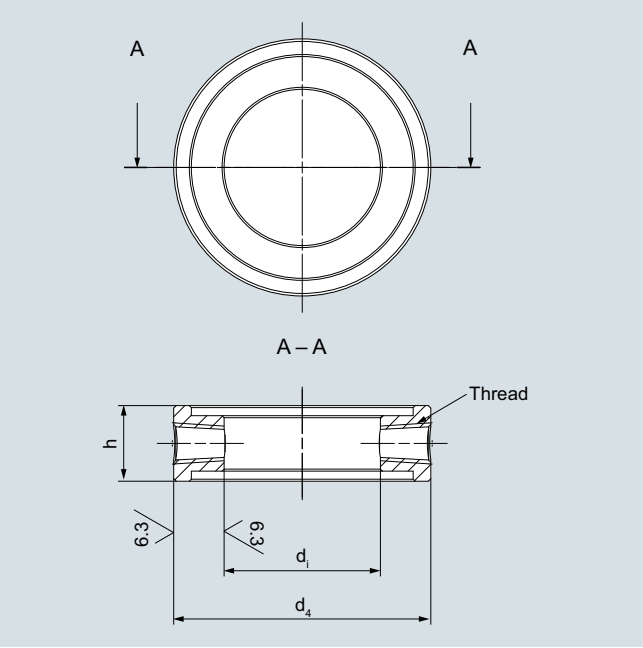

Flushing ring; sealing surface (EN 1092-1), form F

DN	PN	Thread	d_4	d_i	h	x	f3	Weight
mm	bar		Ø in mm (inch)	Ø in mm (inch)	Ø in mm (inch)	Ø in mm (inch)	Ø in mm (inch)	kg lb)
50	16 … 100	¼ NPT	102 (4.02)	62 (2.44)	35 (1.38)	88 (3.46)	4 (0.16)	1.25 (2.76)
80	16 … 100	¼ NPT	138 (5.43)	92 (3.62)	35 (1.38)	121 (4.76)	4 (0.16)	2.02 (4.45)
100	16 … 100	¼ NPT	162 (6.38)	92 (3.62)	35 (1.38)	150 (5.91)	4.5 (0.18)	3.11 (6.86)
125	16 … 100	¼ NPT	188 (7.40)	132 (5.2)	35 (1.38)	175 (6.89)	4.5 (0.18)	3.19 (7.03)
50	16 … 100	½ NPT	102 (4.02)	62 (2.44)	40 (1.58)	88 (3.46)	4 (0.16)	1.45 (3.2)
80	16 … 100	½ NPT	138 (5.43)	92 (3.62)	40 (1.58)	121 (4.76)	4 (0.16)	2.35 (5.18)
100	16 … 100	½ NPT	162 (6.38)	92 (3.62)	40 (1.58)	150 (5.91)	4.5 (0.18)	3.67 (8.09)
125	16 … 100	½ NPT	188 (7.40)	132 (5.2)	40 (1.58)	175 (6.89)	4.5 (0.18)	3.76 (8.29)

© Siemens 2020

Flushing rings for diaphragm seals

Connection according to ASME B 16.5

RFSF and RF 125 ... 250 AA

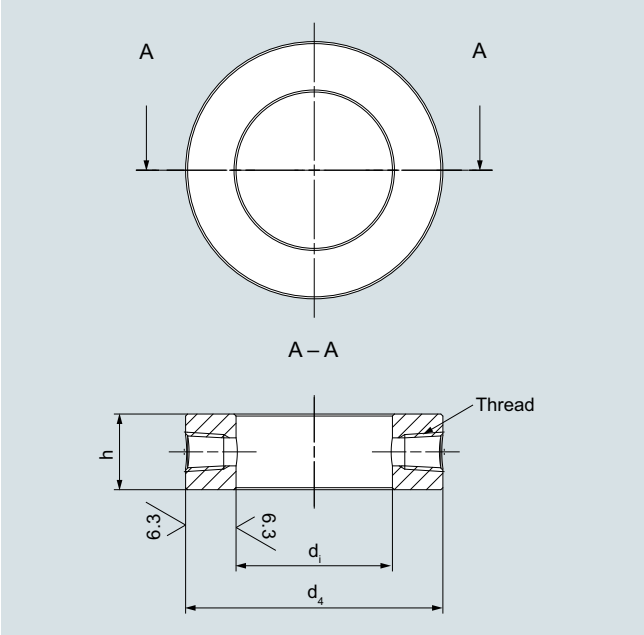

Flushing ring; sealing surface (ASME B 16.5), RFSF and RF 125 to 250 AA

DN	Class	Thread	d_4	d_i	h	Weight
inch			Ø in mm (inch)	Ø in mm (inch)	Ø in mm (inch)	kg lb)
2	150 … 600	¼ NPT	92 (3.62)	62 (2.44)	30 (1.18)	0.87 (1.92)
3	150 … 600	¼ NPT	127 (5)	92 (3.62)	30 (1.18)	1.44 (3.17)
4	150 … 600	¼ NPT	157 (6.18)	92 (3.62)	30 (1.18)	3.05 (6.72)
5	150 … 600	¼ NPT	186 (7.32)	141 (5.55)	30 (1.18)	2.77 (6.11)
2	150 … 600	½ NPT	92 (3.62)	62 (2.44)	30 (1.18)	0.87 (1.92)
3	150 … 600	½ NPT	127 (5)	92 (3.62)	30 (1.18)	1.44 (3.17)
4	150 … 600	½ NPT	157 (6.18)	92 (3.62)	30 (1.18)	3.05 (6.72)
5	150 … 600	½ NPT	186 (7.32)	141 (5.55)	30 (1.18)	2.77 (6.11)

RJF ring groove

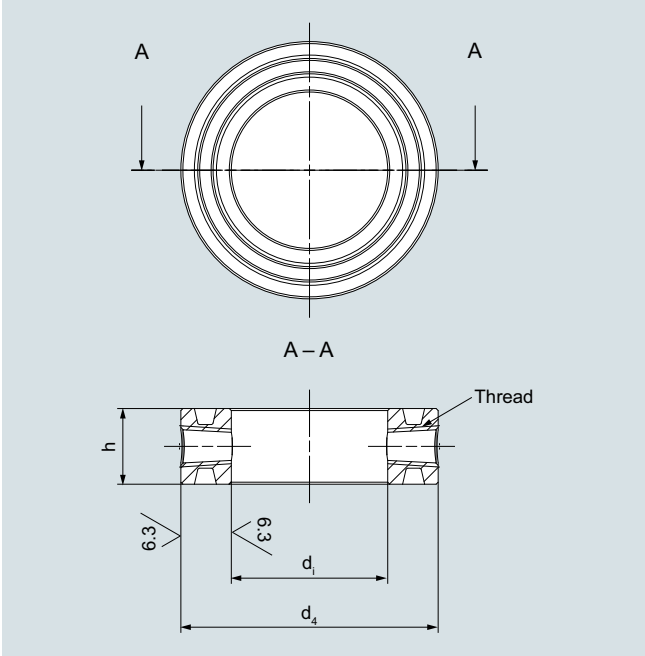

Flushing ring; sealing surface (ASME B 16.5), RJF ring groove

DN	Class	Thread	d_4	d_i	h	Weight
inch			Ø in mm (inch)	Ø in mm (inch)	Ø in mm (inch)	kg lb)
2	150	¼ NPT	102 (4.02)	62 (2.44)	40 (1.58)	1.65 (3.64)
3	150	¼ NPT	133 (5.24)	92 (3.62)	40 (1.58)	2.32 (5.12)
4	150	¼ NPT	171 (6.73)	92 (3.62)	40 (1.58)	5.22 (11.51)
5	150	¼ NPT	194 (7.64)	141 (5.55)	40 (1.58)	4.46 (9.83)
2	150	½ NPT	102 (4.02)	62 (2.44)	46 (1.81)	1.90 (4.19)
3	150	½ NPT	133 (5.24)	92 (3.62)	46 (1.81)	2.66 (5.86)
4	150	½ NPT	171 (6.73)	92 (3.62)	46 (1.81)	6.00 (13.23)
5	150	½ NPT	194 (7.64)	141 (5.55)	46 (1.81)	5.13 (11.31)
2	300 … 600	¼ NPT	108 (4.25)	62 (2.44)	40 (1.58)	1.96 (4.32)
3	300 … 600	¼ NPT	146 (5.75)	92 (3.62)	40 (1.58)	3.23 (7.12)
4	300 … 600	¼ NPT	175 (6.89)	92 (3.62)	40 (1.58)	5.57 (12.28)
5	300 … 600	¼ NPT	210 (8.27)	141 (5.55)	40 (1.58)	6.08 (13.4)
2	300 … 600	½ NPT	108 (4.25)	62 (2.44)	46 (1.81)	2.26 (4.98)
3	300 … 600	½ NPT	146 (5.75)	92 (3.62)	46 (1.81)	3.71 (8.18)
4	300 … 600	½ NPT	175 (6.89)	92 (3.62)	46 (1.81)	6.4 (14.11)
5	300 … 600	½ NPT	210 (8.27)	141 (5.55)	46 (1.81)	7 (15.43)

© Siemens 2020

Overview

This section shows examples of typical measuring setups for using SITRANS P pressure transmitters with and without remote seals.

Equations for calculating lower range value and upper range value are provided for each example.

Questionnaires are included to help you select the right combination of remote seal and pressure transmitter.

Installation

Remote seals of sandwich design are fitted between the connection flange of the measuring point and a dummy flange. Remote seals of flange design are fitted directly on the connection flange of the measuring point. The respective pressure rating of the dummy flange or the flanged remote seal must be observed.

The pressure transmitter should be installed below the connection flange (and below the lower connection flange in the case of differential pressure transmitters). This arrangement must be used in the low-pressure range.

When measuring at pressures above atmospheric, the pressure transmitter can also be installed above the connection flange.

The capillaries between the remote seal and the pressure transmitter should be as short as possible to obtain a good transmission response.

Offset of measuring range

If there is a difference in height between the two connection flanges when measuring with two remote seals, an additional differential pressure will result from the oil filling of the remote seal capillaries. This results in a measuring range offset which has to be taken into account when you set the pressure transmitter.

An offset in the measuring range also occurs when combining a remote seal with a transmitter if the remote seal is not installed at the same height as the transmitter.

Pressure transmitter output

If the level, separation layer or density increase in closed vessels, the differential pressure and hence the output signal of the pressure transmitter also increase.

For an inverted relationship between the differential pressure and the output signal, the lower range value and upper range value of the SITRANS P must be interchanged.

With open vessels, a rising pressure is usually assigned to an increasing level, separation layer or density.

Influence of ambient temperature

Temperature differences between the individual capillaries and between the individual remote seals should be avoided.

Temperature variations in the area of the measuring setup cause a change in volume of the filling liquid and hence measuring errors.

Notes

- For the separation layer measurement, the separation layer has to be positioned between the two spigots. Also you must make sure that the level in the container is always above the top spigot.
- When measuring density, make sure that the level of the medium remains constant. The level should be above the top spigot.

Possible combinations of pressure transmitters and remote seals

Type of installation	Pressure transmitters	Remote seals
A/B	7MF030.-... 7MF031.-... 7MF040.-... 7MF041.-...	7MF0800-... 7MF0810-...
C_1 and C_2	7MF032.-... 7MF042.-...	7MF0800-... 7MF0810-... (negative pressure service in each case)
	7MF033.-... 7MF043.-...	7MF0801-... 7MF0811-...
D	7MF034.-... 7MF035.-... 7MF044.-... 7MF045.-...	7MF0802-... 7MF0812-...
E	7MF034.-... 7MF035.-... 7MF044.-... 7MF045.-...	7MF0813-...
G, H and J	7MF034.-... 7MF035.-... 7MF044.-... 7MF045.-...	7MF0802-... 7MF0812-...

© Siemens 2020

Dimensional drawings

Types of installation for pressure and level measurements (open vessels)

Installation type A

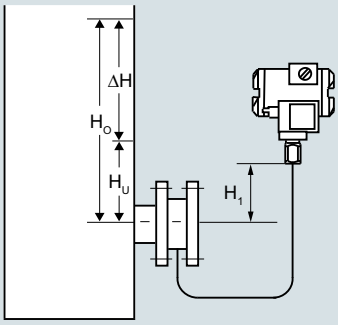

Pressure transmitter
above the measuring point

Installation type B

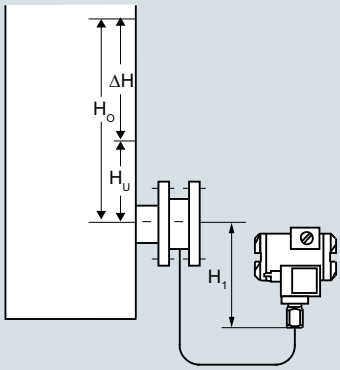

Pressure transmitter
below the measuring point

$H_1 \leq 7$ m (23 ft), with halocarbon oil as filling liquid only $H_1 \leq 4$ m (13.1 ft)

Installation type A

Lower range value: $p_{MA} = \rho_{FL} \cdot g \cdot H_U - \rho_{Oil} \cdot g \cdot H_1$

Upper range value: $p_{ME} = \rho_{FL} \cdot g \cdot H_O - \rho_{Oil} \cdot g \cdot H_1$

Installation type B

Lower range value: $p_{MA} = \rho_{FL} \cdot g \cdot H_U + \rho_{Oil} \cdot g \cdot H_1$

Upper range value: $p_{ME} = \rho_{FL} \cdot g \cdot H_O + \rho_{Oil} \cdot g \cdot H_1$

Legend

p_{MA}	Lower range value to be set
p_{ME}	Upper range value to be set
ρ_{FL}	Density of medium in vessel
ρ_{Oil}	Density of filling oil in the capillary to the remote seal
g	Local acceleration due to gravity
H_U	Lower range value
H_O	Upper range value
H_1	Distance between vessel flange and pressure trans.

Types of installation for absolute level measurements (closed vessels)

Installation type C_1

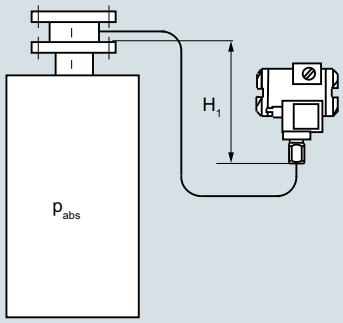

Installation type C_2

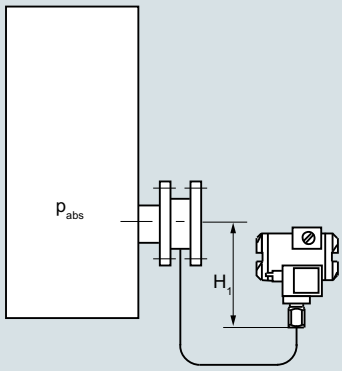

Pressure transmitter for absolute pressure always below the measuring point: $H_1 \geq 200$ mm (7.9 inch)

Installation type C_1 and C_2

Lower range value: $p_{MA} = p_{START} + \rho_{Oil} \cdot g \cdot H_1$

Upper range value: $p_{ME} = p_{END} + \rho_{Oil} \cdot g \cdot H_1$

Legend

p_{MA}	Lower range value to be set
p_{ME}	Upper range value to be set
p_{START}	Lower range value
p_{END}	Upper range value
ρ_{Oil}	Density of filling oil in the capillary to the remote seal
g	Local acceleration due to gravity
H_1	Distance between vessel flange and pressure trans.

Type of installation for differential pressure and flow measurements

Installation type D Filter monitoring

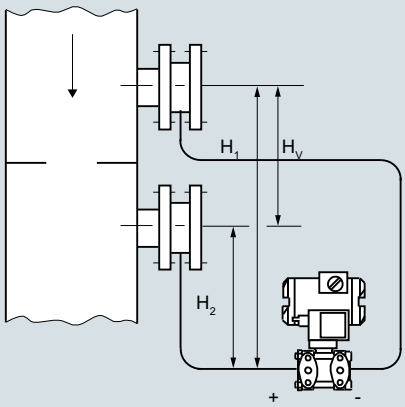

Installation type D

Lower range value: $p_{MA} = p_{START} - \rho_{Oil} \cdot g \cdot H_V$

Upper range value: $p_{ME} = p_{END} - \rho_{Oil} \cdot g \cdot H_V$

Legend

p_{MA}	Lower range value to be set
p_{ME}	Upper range value to be set
p_{START}	Lower range value
p_{END}	Upper range value
ρ_{Oil}	Density of filling oil in the capillary to the remote seal
g	Local acceleration due to gravity
H_V	Distance between the measuring points (spigots)

© Siemens 2020

Types of installation for level measurements (closed vessels)

Installation type E

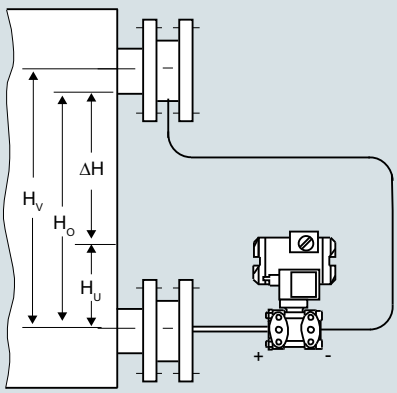

Installation type E

Lower range value: $p_{MA} = \rho_{FL} \cdot g \cdot H_U - \rho_{Oil} \cdot g \cdot H_V$

Upper range value: $p_{ME} = \rho_{FL} \cdot g \cdot H_O - \rho_{Oil} \cdot g \cdot H_V$

Legend

p_{MA}	Lower range value to be set
p_{ME}	Upper range value to be set
ρ_{FL}	Density of medium in vessel
ρ_{Oil}	Density of filling oil in the capillary to the remote seal
g	Local acceleration due to gravity
H_U	Lower range value
H_O	Upper range value
H_V	Distance between the measuring points (spigots)

Installation type G

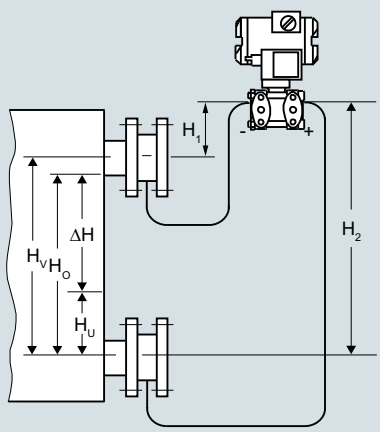

Pressure transmitter for differential pressure above the upper measuring point, no vacuum

$H_2 \leq 7$ m (23 ft), with halocarbon oil as filling liquid only $H_1 \leq 4$ m (13.1 ft)

Installation type H

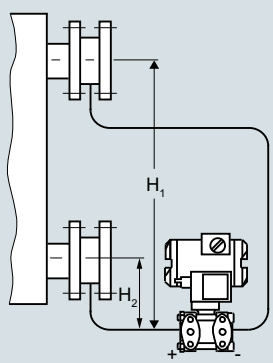

below the lower measuring point

Installation type for vacuum applications

Installation type J

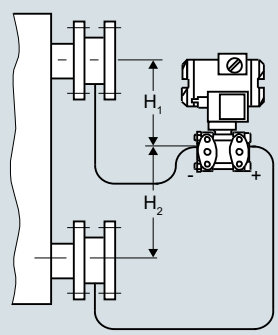

between the measuring points, no vacuum

$H_2 \leq 7$ m (23 ft), with halocarbon oil as filling liquid only $H_2 \leq 4$ m (13.1 ft)

Installation type G, H and J

Lower range value:
$p_{MA} = \rho_{FL} \cdot g \cdot H_U - \rho_{Oil} \cdot g \cdot H_V$

Upper range value:
$p_{ME} = \rho_{FL} \cdot g \cdot H_O - \rho_{Oil} \cdot g \cdot H_V$

Legend

p_{MA}	Lower range value to be set
p_{ME}	Upper range value to be set
ρ_{FL}	Density of medium in vessel
ρ_{Oil}	Density of filling oil in the capillary to the remote seal
g	Local acceleration due to gravity
H_U	Lower range value
H_O	Upper range value
H_V	Distance between the measuring points (spigots)

© Siemens 2020

Overview

Notes

- For the separation layer measurement, the separation layer has to be positioned between the two spigots.

Also you must make sure that the level in the container is always above the top spigot.

- When measuring density, make sure that the level of the medium remains constant. The level should be above the top spigot

Dimensional drawings

Pressure transmitters for differential pressure, for flanging

Measuring setups for open containers

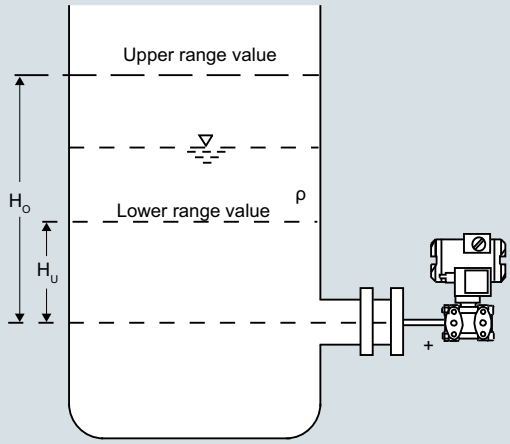

Level measurement

Lower range value: $p_{MA} = \rho \cdot g \cdot H_U$

Upper range value: $p_{ME} = \rho \cdot g \cdot H_O$

Legend

p_{MA}	Lower range value to be set
p_{ME}	Upper range value to be set
ρ	Density of medium in vessel
g	Local acceleration due to gravity
H_U	Lower range value
H_O	Upper range value

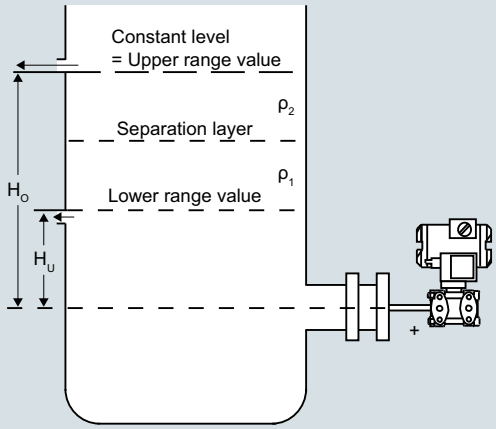

Separation layer measurement

Lower range value: $p_{MA} = g \cdot (H_U \cdot \rho_1 + (H_O - H_U) \cdot \rho_2)$

Upper range value: $p_{ME} = \rho_1 \cdot g \cdot H_O$

Legend

p_{MA}	Lower range value to be set
p_{ME}	Upper range value to be set
ρ_1	Density of heavier liquid
ρ_2	Density of lighter liquid
g	Local acceleration due to gravity
H_U	Lower range value
H_O	Upper range value

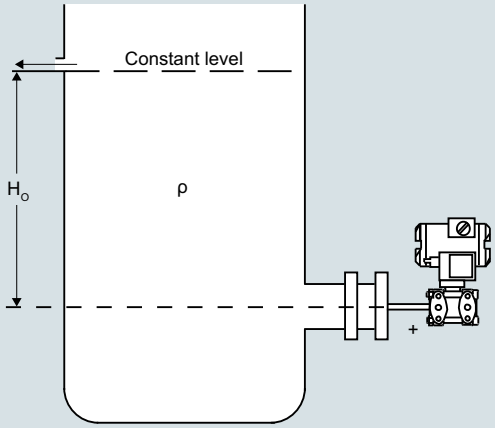

Density measurement

Lower range value: $p_{MA} = \rho_{MIN} \cdot g \cdot H_O$

Upper range value: $p_{ME} = \rho_{MAX} \cdot g \cdot H_O$

Legend

p_{MA}	Lower range value to be set
p_{ME}	Upper range value to be set
ρ_{MIN}	Minimum density of medium in vessel
ρ_{MAX}	Maximum density of medium in vessel
g	Local acceleration due to gravity
H_O	Upper range value in m

© Siemens 2020

Measuring setups for closed containers

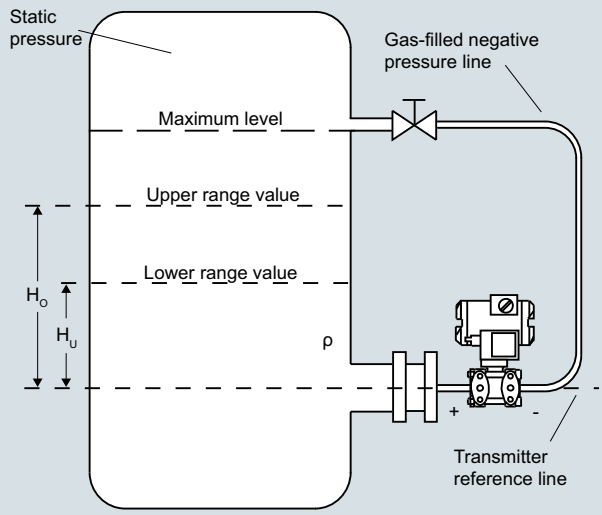

Level measurement, Version 1

Lower range value: $\Delta p_{MA} = \rho \cdot g \cdot H_U$

Upper range value: $\Delta pME = \rho \cdot g \cdot H_O$

Legend

Δp_{MA}	Lower range value to be set
Δp_{ME}	Upper range value to be set
ρ	Density of medium in vessel
g	Local acceleration due to gravity
H_U	Lower range value
H_O	Upper range value

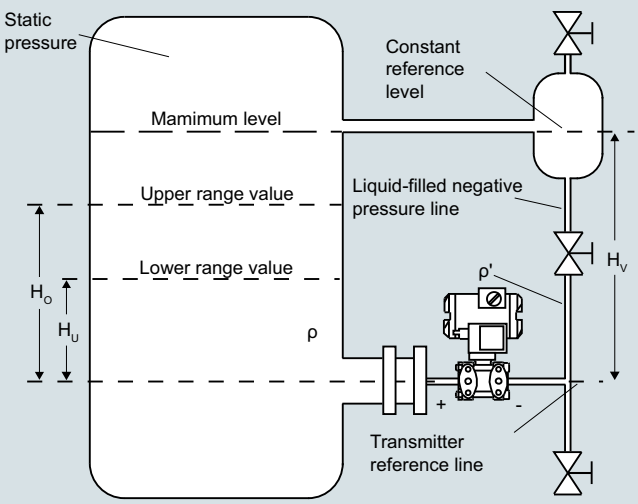

Level measurement, Version 2

Lower range value: $\Delta p_{MA} = g \cdot (H_U \cdot \rho - H_V \cdot \rho')$

Upper range value: $\Delta p_{ME} = g \cdot (H_O \cdot \rho - H_V \cdot \rho')$

Legend

Δp_{MA}	Lower range value to be set
Δp_{ME}	Upper range value to be set
ρ	Density of medium in vessel
ρ'	Density of liquid in the negative pressure line (corresponding to the temperature existing there)
g	Local acceleration due to gravity
H_U	Lower range value
H_O	Upper range value
H_V	Distance between the measuring points (spigots)

© Siemens 2020

Measuring setups without remote seals

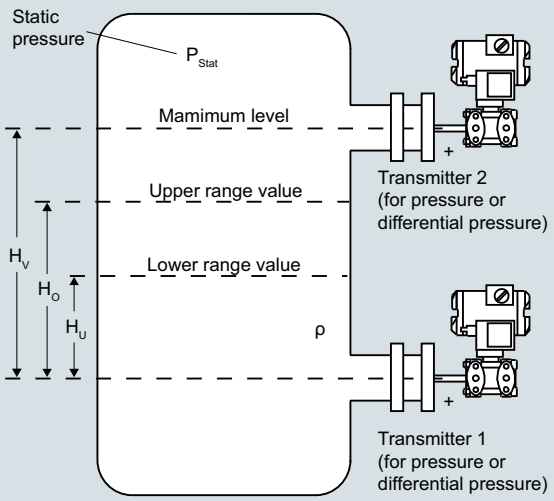

Level measurement, Version 3

Lower range value: $\Delta p_{MA} = \underbrace{P_{Stat} + \rho \cdot g \cdot H_U}_{\text{Transmitter 1}} - \underbrace{P_{Stat}}_{\text{Transmitter 2}}$

Upper range value: $\Delta p_{ME} = \underbrace{P_{Stat} + \rho \cdot g \cdot H_O}_{\text{Transmitter 1}} - \underbrace{P_{Stat}}_{\text{Transmitter 2}}$

Legend

Δp_{MA}	Lower range value to be set
Δp_{ME}	Upper range value to be set
ρ	Density of medium in vessel
g	Local acceleration due to gravity
H_U	Lower range value
H_O	Upper range value
H_V	Distance between the measuring points (spigots)

The pressure measuring range (≙ level) will be calculated by subtraction of measuring range of transmitter 1 minus measuring range of transmitter 2 in the process control system.

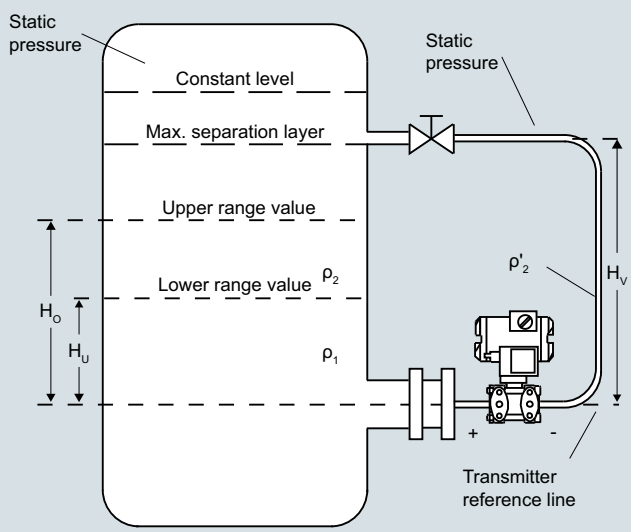

Separation layer measurement

Lower range value: $\Delta p_{MA} = g \cdot (H_U \cdot \rho_1 + (H_O - H_U) \cdot \rho_2 - H_V \cdot \rho'_2)$

Upper range value: $\Delta p_{ME} = g \cdot (H_O \cdot \rho_1 - H_V \cdot \rho'_2)$

Legend

Δp_{MA}	Lower range value to be set
Δp_{ME}	Upper range value to be set
ρ_1	Density of heavier liquid with separation layer in vessel
ρ_2	Density of lighter liquid with separation layer
ρ'_2	Density of liquid in the negative pressure line (corresponding to the temperature existing there)
g	Local acceleration due to gravity
H_U	Lower range value
H_O	Upper range value
H_V	Distance between the measuring points (spigots)

© Siemens 2020

Overview

In many cases the pressure transmitter and the medium have to be physically separated. It is then necessary to use a remote seal.

The remote seals can be used with the following SITRANS P pressure transmitter series:

- Gauge pressure
  - P300 with HART, PROFIBUS PA, FOUNDATION Fieldbus
  - DS III with HART, PROFIBUS PA, FOUNDATION Fieldbus
  - P410 with HART, PROFIBUS PA, FOUNDATION Fieldbus
- Absolute pressure
  - P300, DS III with HART
  - DS III with PROFIBUS PA
  - DS III with FOUNDATION Fieldbus
- Differential pressure and flow
  - DS III with HART, PROFIBUS PA, FOUNDATION Fieldbus
  - P410 with HART, PROFIBUS PA, FOUNDATION Fieldbus
  - P500 with HART

Note

When configuring your remote seal, be sure to read the information about transmission response, temperature error and response time to be found in the sections "Function" and "Technical data". Only then will the remote seal work to optimum effect.

Benefits

- No direct contact between the pressure transmitter and the medium
- Individual configuration of the pressure transmitter for perfect adaptation to the operating conditions
- Available in many versions
- Specially designed for difficult operating conditions
- Quick-release versions available for the food industry

Application

Remote seal systems should be used if a separation between the medium and the measuring instrument is essential or appropriate.

Examples of such cases:

- The temperature of the medium is outside the limits specified for the pressure transmitter.
- The medium is corrosive and requires diaphragm materials which are not available for the pressure transmitter.
- The medium is highly viscous or contains solids which would block the measuring chambers of the pressure transmitter.
- The medium may freeze in the measuring chambers or pulse line.
- The medium is heterogeneous or fibrous.
- The medium tends towards polymerization or crystallization.
- The process requires quick-release remote seals, as necessary e.g. in the food industry for fast cleaning.
- The process requires cleaning of the measuring point, e.g. in a batch process.

Design

A remote seal system consists of the following components.

- Pressure transmitter
- One or two remote seals
- Filling liquid
- Connection between pressure transmitter and remote seal (direct mounting or by means of capillary)

The space for the medium is sealed off with a flat embedded elastic diaphragm. Between the diaphragm and the pressure transmitter is the filling liquid.

In many cases, a capillary must be connected between the remote seal and the pressure transmitter in order, for example, to reduce the temperature effects on the pressure transmitter when the measured medium is hot.

However, the capillary influences the activation time and the temperature response of the overall remote seal system. When capillaries are used to connect a remote seal to a pressure transmitter for differential pressure, two capillaries of equal length must always be used.

Optionally, the remote seal with diaphragm extension (tube) can be ordered.

The remote seals in sandwich design are secured with a blank flange.

Designs

Diaphragm seal

With diaphragm seals, the pressure is measured by means of a flat diaphragm which rests in a bed.

The following types of diaphragm seals exist:

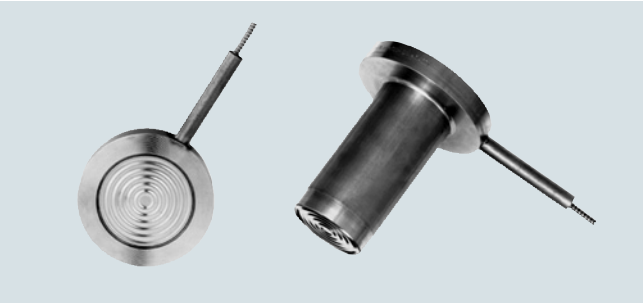

Diaphragm seal of sandwich design without (left) and with a projecting diaphragm (tube)

- Sandwich design
- Sandwich design with projecting diaphragm (tube) to DIN or ASME which are secured using a dummy flange.

Diaphragm seal of flange design without (left) and with a projecting diaphragm (tube)

- Flange design
- Flange design with projecting diaphragm (tube) to DIN or ASME, secured using holes in the flange.

Quick-release diaphragm seal

© Siemens 2020

- Quick-release remote seals, e.g. to DIN 11851, SMS standard, IDF standard, APV RJF standard, clamp connection, etc.
- Miniature diaphragm seal with male thread for screwing into tapped holes
- Remote seals with customer-specific process connections

Miniature diaphragm seal with diaphragm flush with front

- Miniature diaphragm seals

The quick-release remote seals are used above all in the food industry. Their design means that the medium cannot accumulate in dead volumes. The quick-release clamp present on the remote seal means that quick dismounting is possible for cleaning.

Inline seall

Inline seal with quick-release design (left) and for flange mounting

With inline seals, the pressure is first measured using a cylindrical diaphragm positioned in a pipe, and then transmitted to the pressure transmitter by means of the filling liquid.

The inline seal is a special design for flowing media. It consists of a cylindrical pipe in which a cylindrical diaphragm is embedded. Since it is completely integrated in the process pipe, no turbulences, dead volumes or other obstructions to the flow occur. Furthermore, the inline seal can be cleaned by a pig.

The following types of inline seals exist:

- Quick-release inline seals, e.g. to DIN 11851, SMS standard, IDF standard, APV/RJF standard, clamp connection etc. The quick-release facility attached to the remote seal enables the seal to be removed quickly for cleaning purposes.
- Inline seals for flanging to EN or ASME.
- Inline seals with customer-specific process connections.

Note:

The pressure data on the transmitter and the remote seal must be observed with regard to pressure/temperature behavior.

Function

The measured pressure is transferred from the diaphragm to the filling liquid and passes through the capillary to the measuring chamber of the pressure transmitter. The interior of the diaphragm seal and of the capillary, as well as the measuring chamber of the transmitter, are filled gas-free by the filling liquid.

Transmission response

The transmission response of a remote seal is characterized by the following variables:

- Temperature error
- Adjustment time

Temperature error

Temperature errors are caused by the change of volume of the filling liquid due to temperature variations. To select the right remote seal you must calculate the temperature error.

Below you will find an overview of the factors which influence the size of the temperature error, as well as information on how to calculate the temperature error.

The temperature error is dependent on the following variables:

- Rigidity of the diaphragm used
- Filling liquid used
- Influence of the filling liquid underneath the process flanges or in the connection shank of the pressure transmitter
- Internal diameter of the capillary: The bigger the internal diameter, the bigger the temperature error
- Length of the capillary: The longer the capillary, the bigger the temperature error

Diaphragm rigidity

The rigidity of the diaphragm is of decisive importance. The bigger the diameter of the diaphragm, the softer the diaphragm and the more sensitively it reacts to temperature-induced changes in volume of the filling liquid.

The result is that small measuring ranges are only possible with large diaphragm diameters.

Other factors apart from diaphragm rigidity which also play a role:

- Diaphragm thickness
- Diaphragm material
- Coatings if present

Filling liquid

Every filling liquid reacts to temperature variations with a change of volume. Temperature errors can be minimized by selecting a suitable filling liquid, but the filling liquid must also be appropriate for the temperature limits and operating pressure. Furthermore, the filling liquid must also be physiologically harmless.

Since the filling liquid is present under the diaphragm, in the capillary and under the process flange of the pressure transmitter (or in the connection shank), the temperature error must be calculated separately for each combination.

Note:

A vacuum-resistant remote seal is recommended for continuous low-pressure operation at 500 mbar a or below, including during commissioning (see ordering data).

An example of a temperature error calculation can be found in the section "Technical Specifications".

© Siemens 2020

Response time

The response time is dependent on the following factors:

- Internal diameter of the capillary: The bigger the internal diameter, the shorter the response time
- Viscosity of the filling liquid The greater the viscosity, the longer the response time
- Length of the capillary: The longer the capillary, the longer the response time
- Pressure in the pressure measuring system: The higher the pressure, the shorter the response time

Recommendations

The following should be observed to obtain an optimum combination of transmitter and remote seal:

- Choose the biggest possible diameter for the remote seal. The effective diameter of the seal diaphragm is then bigger and the temperature error smaller.
- Choose the shortest possible capillary. The response time is then shorter and the temperature error smaller
- Choose the filling liquid with the least viscosity and the smallest coefficient of expansion. Make sure, however, that the filling liquid meets the process requirements with regard to pressure, vacuum and temperature. And ensure that the filling liquid and the medium are compatible with one another.
- Note the following points for use in the vacuum range:
  - The pressure transmitter must always be positioned below the lowest spigot.
  - The operating range of some filling liquids is very limited with regard to the permissible temperature of the medium.
  - A vacuum-proof seal is necessary for continuous operation in the low-pressure range.
- Recommendations for the minimum measuring span can be found in the section "Technical data".

Note

The remote seals listed here are a selection of the most common designs. On account of the large variety of process connections, certain remote seals which are not listed here may be available nevertheless.

Other versions can be:

- Other process connections, standards
- Aseptic or sterile connections
- Other dimensions
- Other nominal pressures
- Special diaphragm materials, including coatings
- Other sealing faces
- Other filling liquids
- Other capillary lengths
- Sheathing of capillaries with protective hose
- Calibration at higher/lower temperatures etc.

Please contact your local Siemens office for further information.

Negative pressure service

Liquids, such as silicone oils, inert or those suitable for food, are used in remote seal systems for transmission of the process pressure to the pressure transmitter.

In each liquid, particles have the tendency to leave the liquid compound with increasing temperature (transition from liquid to gaseous aggregate state). This means the vapor pressure increases with increasing temperature and is dependent on the substance or mixture being present.

The higher the temperature and the lower the associated process pressure in the liquid, the more difficult it gets to guarantee the desired transmission properties of the fill fluid and therefore the measuring arrangement.

Plus the sealing elements at the transmitter must be designed so that a diffusion of molecules from the atmosphere into the remote seal system is prevented due to the constantly occurring negative pressure.

In addition to the influencing variables process pressure and process temperature, the vapor pressure curve of the fill fluid at the remote seal end and the stiffness of the remote seal membrane impact the functionality of the remote seal in the negative pressure range.

This means you have to pay special attention to the physical properties of fill fluids with applications in the negative pressure range.

There are three stages for the negative pressure resistance:

- **Standard design** of the remote seal without additional protective measures, suitable for the overpressure range and low negative pressure range. This design is identified with (1) in the diagrams below in section 3.
- **Negative pressure service** with suitable seals and treated fill fluid, identified with (2) in the diagrams below in section 3. Here you select the order codes V01, V03 or V04, depending on the mounting type.·
- **Extended negative pressure service** with more extended treatment of the fill fluid and the remote seals, identified in the diagrams below. Here you select the order codes V51, V53 or V54, depending on the mounting type.

There are two more areas in the diagrams. The area (4) identifies an area that has to be clarified with Technical Support prior to placing the order. The area (5) describes the area in which the remote seal fill fluid is permanently destroyed and the entire remote seal is therefore without function.

© Siemens 2020

Technical description

Technical specifications of the remote seal filling liquids

Filling liquid	Number in the Article No.	Density at 20°C [kg/dm³]	Viscosity at 20°C [mm²/s]	Suitable for negative pressure service	Suitable for extended negative pressure service
Silicone oil M5	1	0,914	4	x	-
Silicone oil M50	2	0,966	50	x	x
High-temperature oil	3	1,070	57	x	x
Halocarbon oil	4	1,968	14	x	-
Food oil (FDA-listed)	7	0,920	10	x	x

The suitable negative pressure service is specified with the pressure/temperature curves of the respective liquids described below.

Note: For reasons of operational safety, the transmitter must not exceed the height of the remote seal - with differential pressure applications, the height of the bottom remote seal - for measurements in the negative pressure range. The associated installation types B, C1, C2 or H are described at the end of this section under the topic "Measuring arrangements".

Selection of the required negative pressure service

The procedure for determining the required negative pressure service is described below using the silicone oil M5 as fill fluid. The minimum existing process pressure of a fictitious process is 200 $mbar_{abs}$ (2.9 psi) (at a maximum process temperature of 150 °C (302 °F)). This intersection is identified by an "✖" in the diagram below. This means the negative pressure service V01, V03 or V04 (depending on the application) is sufficient in this example.

The suitable negative pressure resistance is determined this way for all other fill fluids.

Note:
Note the response times according to the table on page 1/413.

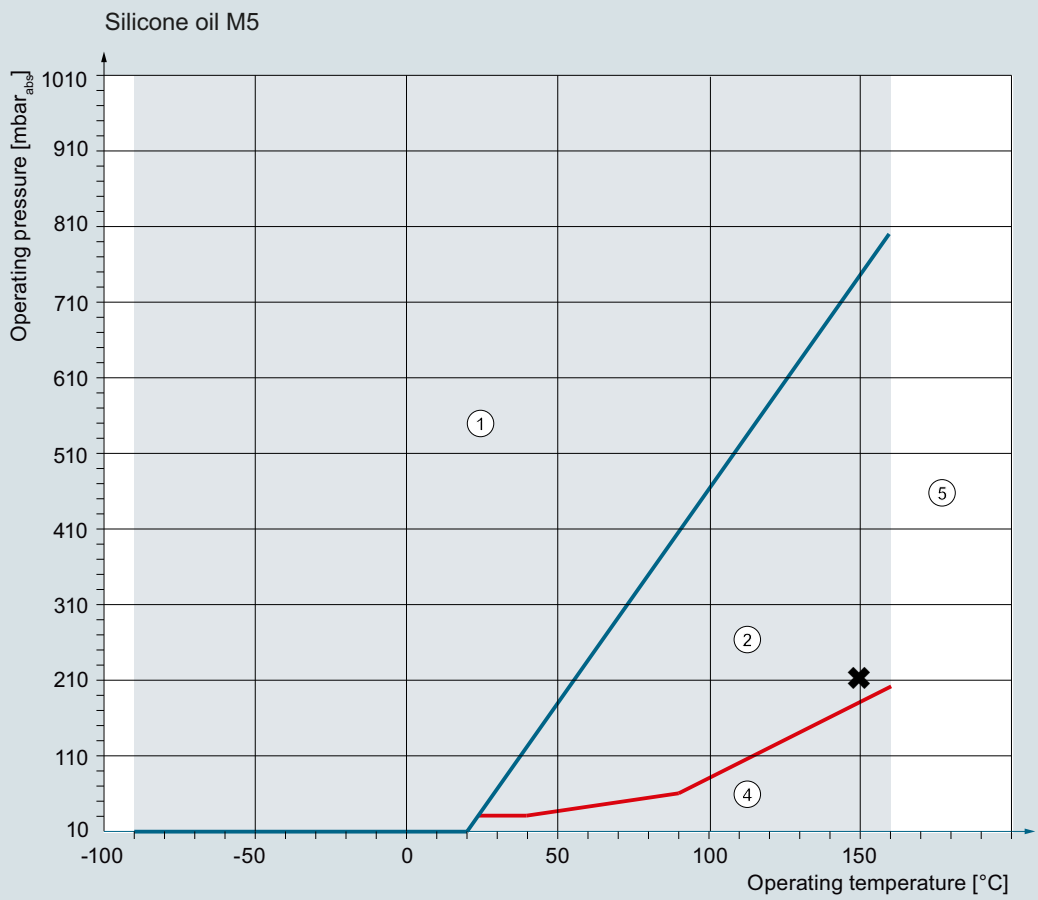

(1) Operating range of the standard remote seal design without special measures.

(2) Operating range for which the **negative pressure service V01, V03 or V04** is required.
Note: An extended negative pressure service is **not** possible for this fill fluid.

(4) Please contact Technical Support for applications in this area.
Detailed information regarding application, process and ambient data are necessary.

(5) Area in which you have to expect the destruction of the fill fluid.
A function of the remote seal is not specified here.

Permissible operating range:
Max. temperature limit: 160 °C
Min. temperature limit: -90 °C

Negative pressure applications with silicone oil M5

© Siemens 2020

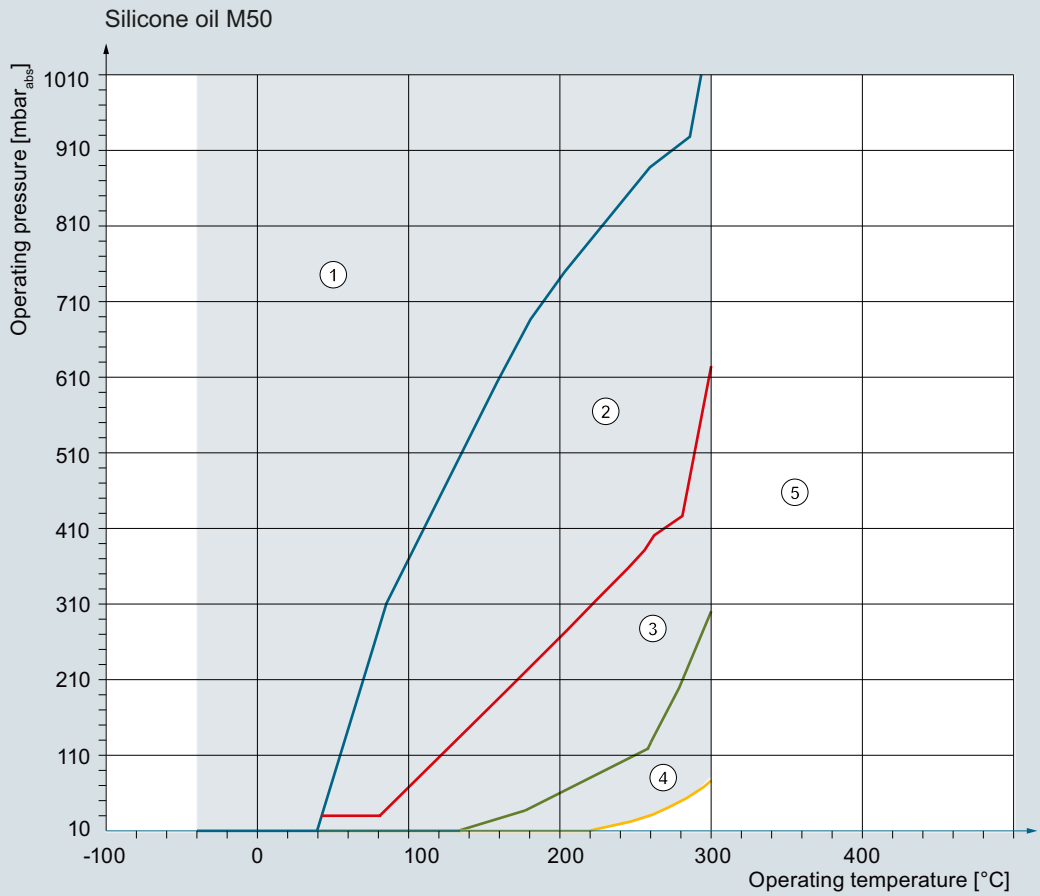

1. Operating range of the standard remote seal design without special measures.
2. Operating range for which the **negative pressure service V01, V03 or V04** is required.
3. Operating range for which the **extended negative pressure service V51, V53 or V54** is required
4. Please contact Technical Support for applications in this area.
   Detailed information regarding application, process and ambient data are necessary.
5. Area in which you have to expect the destruction of the fill fluid.
   A function of the remote seal is not specified here.

Permissible operating range:
Max. temperature limit: 300 °C
Min. temperature limit: -40 °C

Negative pressure applications with silicone oil M50

© Siemens 2020

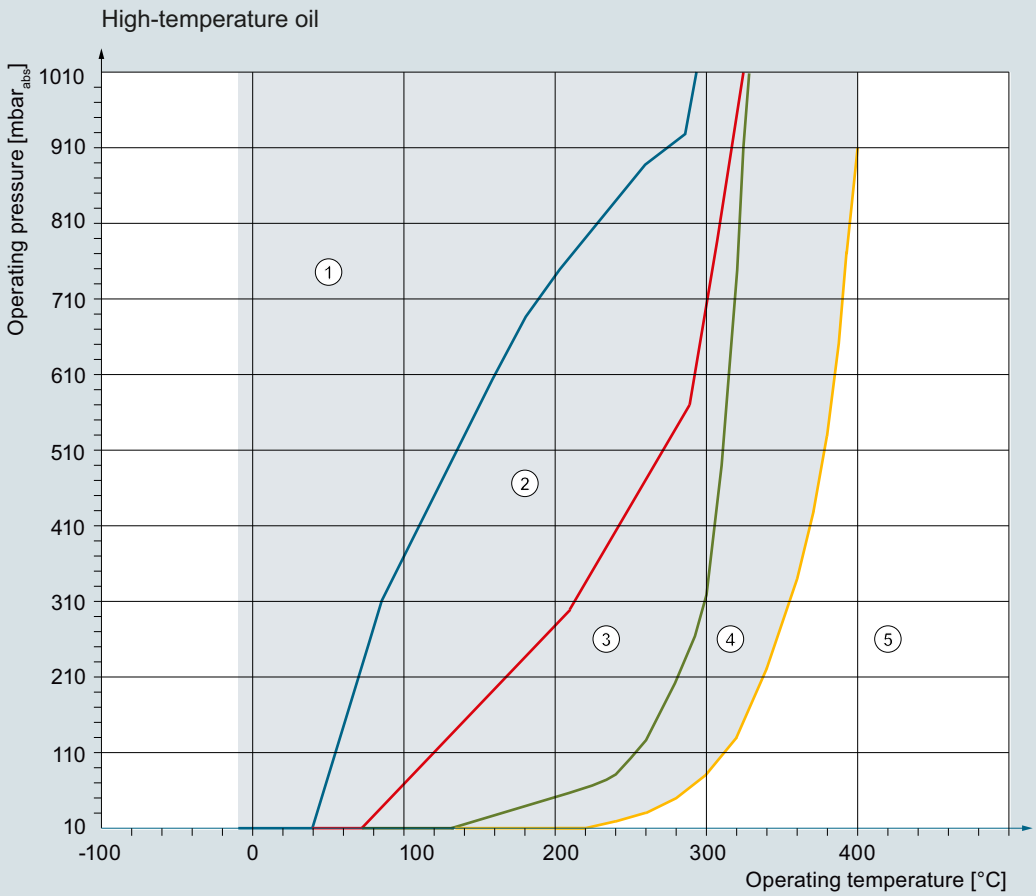

1 Operating range of the standard remote seal design without special measures.

2 Operating range for which the **negative pressure service V01, V03 or V04** is required.

3 Operating range for which the **extended negative pressure service V51, V53 or V54** is required

4 Please contact Technical Support for applications in this area.
Detailed information regarding application, process and ambient data are necessary.

5 Area in which you have to expect the destruction of the fill fluid.
A function of the remote seal is not specified here.

Permissible operating range:
Max. temperature limit: 400 °C
Min. temperature limit: -10 °C

Negative pressure applications with high-temperature oil

© Siemens 2020

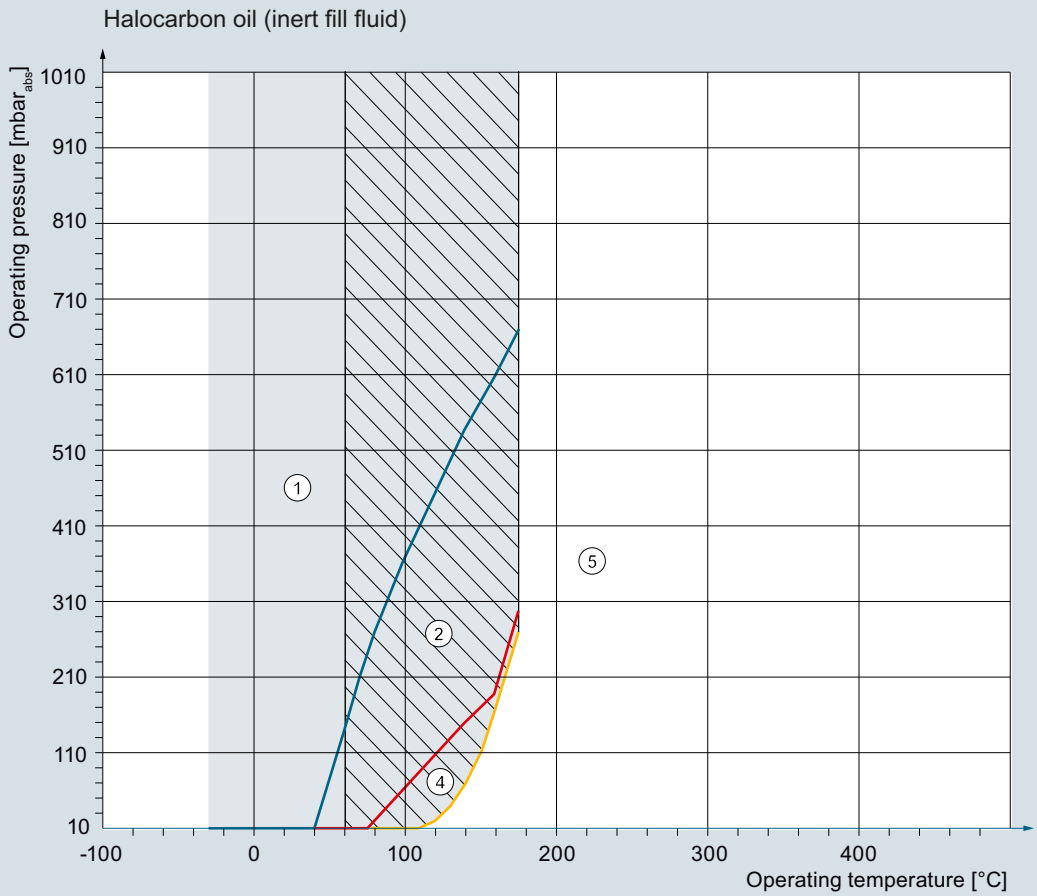

(1) Operating range of the standard remote seal design without special measures.

(2) Operating range for which the **negative pressure service V01, V03 or V04** is required.
Note: An extended negative pressure service is **not** possible for this fill fluid.

(4) Please contact Technical Support for applications in this area.
Detailed information regarding application, process and ambient data are necessary.

(5) Area in which you have to expect the destruction of the fill fluid.
A function of the remote seal is not specified here.

Permissible operating range:
Max. temperature limit: 175 °C
Min. temperature limit: -30 °C

Oxygen application for operating temperature between 60 and 175 °C
and also for operating pressure > 50 bar not permissible.

Negative pressure applications with halocarbon oil (inert filling liquid)

A BAM approval for process temperatures up to 60 °C (140 °F) and system pressures up to 50 bar (725 psi) is available for the oxygen application.

© Siemens 2020

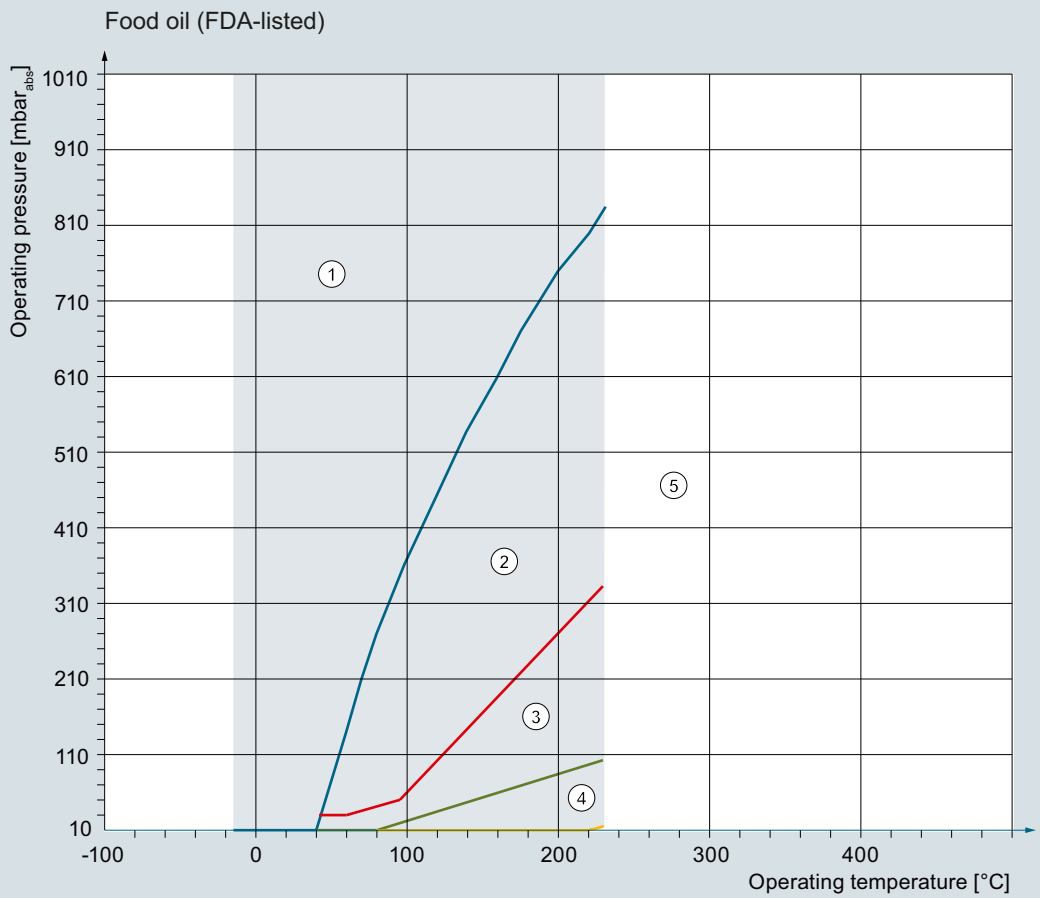

1. Operating range of the standard remote seal design without special measures.
2. Operating range for which the **negative pressure service V01, V03 or V04** is required.
3. Operating range for which the **extended negative pressure service V51, V53 or V54** is required
4. Please contact Technical Support for applications in this area.
   Detailed information regarding application, process and ambient data are necessary.
5. Area in which you have to expect the destruction of the fill fluid.
   A function of the remote seal is not specified here.

Permissible operating range:
Max. temperature limit: 230 °C
Min. temperature limit: -15 °C

Negative pressure applications with food oil (FDA listed)

© Siemens 2020

Technical specifications

Temperature error Diaphragm seals

Temperature errors of diaphragm seals when connected to pressure transmitters for pressure, absolute pressure, differential pressure (single-sided) and level

	Nominal diameter/ design	Diaphragm diameter		Temperature error of remote seal f_{RS}		Temperature error of capillary f_{Cap}		Temperature error of process flange/connection spigot f_{PF}		Recommended min. measuring spans (guidance values, observe temp. error)	
		mm	(inch)	mbar/ 10 K	(psi/ 10 K)	mbar/ (10 K · m_{Cap})	(psi/ (10 K · m_{Cap}))	mbar/ 10 K	(psi/ 10 K)	mbar	(psi)
Sandwich design or with flange to EN 1092-1	DN 50 without tube	59	(2.32)	1.5	(0.022)	2	(0.029)	2	(0.029)	200	(2.90)
	DN 50 with tube	45	(1.89)	5	(0.073)	10	(0.145)	10	(0.145)	500	(7.25)
	DN 80 without tube	89	(3.50)	0.2	(0.003)	0.2	(0.003)	0.2	(0.003)	100	(1.45)
	DN 80 with tube	72	(2.83)	1	(0.015)	1	(1.015)	1	(1.015)	250	(3.63)
	DN 100 without tube	89	(3.50)	0.2	(0.003)	0.4	(0.006)	0.4	(0.006)	100	(1.45)
	DN 100 with tube	89	(3.50)	0.4	(0.006)	0.4	(0.006)	0.4	(0.006)	100	(1.45)
	DN 125 without tube	124	(4.88)	0.2	(0.003)	0.1	(0.002)	0.1	(0.002)	20	(0.29)
	DN 125 with tube	124	(4.88)	0.2	(0.003)	0.1	(0.002)	0.1	(0.002)	20	(0.29)
Sandwich design or with flange to ASME B16.5	2 inch without tube	59	(2.32)	1.5	(0.022)	2	(0.029)	2	(0.029)	200	(2.90)
	2 inch with tube	45	(1.89)	5	(0.073)	10	(0.145)	10	(0.145)	500	(7.25)
	3 inch without tube	89	(3.50)	0.2	(0.003)	0.2	(0.003)	0.2	(0.003)	100	(1.45)
	3 inch with tube	72	(2.83)	1	(0.015)	1	(1.015)	1	(1.015)	250	(3.63)
	4 inch without tube	89	(3.50)	0.2	(0.003)	0.4	(0.006)	0.4	(0.006)	100	(1.45)
	4 inch with tube	89	(3.50)	0.4	(0.006)	0.4	(0.006)	0.4	(0.006)	100	(1.45)
	5 inch without tube	124	(4.88)	0.2	(0.003)	0.1	(0.002)	0.1	(0.002)	20	(0.29)
	5 inch with tube	124	(4.88)	0.2	(0.003)	0.1	(0.002)	0.1	(0.002)	20	(0.29)
Remote seal with union nut to DIN 11851	DN 25	25	(0.98)	20	(0.290)	60	(0.870)	60	(0.870)	6000	(87)
	DN 32	32	(1.26)	8	(0.116)	25	(0.363)	25	(0.363)	4000	(58)
	DN 40	40	(1.57)	4	(0.058)	10	(0.145)	10	(0.145)	2000	(29)
	DN 50	52	(2.05)	4	(0.058)	5	(0.073)	5	(0.073)	500	(7.25)
	DN 65	59	(2.32)	3	(0.044)	4	(0.058)	4	(0.058)	500	(7.25)
	DN 80	72	(2.83)	1	(0.015)	1	(0.015)	1	(0.015)	250	(3.63)
Remote seal, screwed gland design	DN 50	52	(2.05)	4	(0.058)	5	(0.073)	5	(0.073)	500	(7.25)
Remote seal with threaded socket to DIN 11851	DN 25	25	(0.98)	20	(0.290)	60	(0.870)	60	(0.870)	6000	(87)
	DN 32	32	(1.26)	8	(0.116)	25	(0.363)	25	(0.363)	4000	(58)
	DN 40	40	(1.57)	4	(0.058)	10	(0.145)	10	(0.145)	2000	(29)
	DN 50	52	(2.05)	4	(0.058)	5	(0.073)	5	(0.073)	500	(7.25)
	DN 65	59	(2.32)	3	(0.044)	4	(0.058)	4	(0.058)	500	(7.25)
	DN 80	72	(2.83)	1	(0.015)	1	(0.015)	1	(0.015)	250	(3.63)
Clamp connection	1½ inch	32	(1.26)	8	(0.116)	25	(0.363)	25	(0.363)	4000	(58)
	2 inch	40	(1.57)	4	(0.058)	10	(0.145)	10	(0.145)	2000	(29)
	2½ inch	59	(2.32)	3	(0.044)	5	(0.073)	5	(0.073)	500	(7.25)
	3 inch	72	(2.83)	1	(0.015)	1	(0.015)	1	(0.015)	250	(3.63)
Miniature diaphragm seal	G1B	25	(0.98)	20	(0.290)	60	(0.870)	60	(0.870)	6000	(87)
	G1½B	40	(1.57)	4	(0.058)	10	(0.145)	10	(0.145)	2000	(29)
	G2B	52	(2.05)	4	(0.058)	5	(0.073)	5	(0.073)	500	(7.25)

Remarks:

- Values apply for the filling liquids silicone oil M5, silicone oil M50, high-temperature oil, halocarbon oil and food oil (FDA listed).
- Values apply to stainless steel as the diaphragm material.

© Siemens 2020

Temperature errors of diaphragm seals with connection to differential pressure transmitters (double-sided)

	Nominal diameter/ design	Diaphragm diameter		Temperature error of remote seal f_{RS}		Temperature error of capillary f_{Cap}		Temperature error of process flange/connection spigot f_{PF}		Recommended min. measuring spans (guidance values, observe temperature error)	
		mm	(inch)	mbar/ 10 K	(psi/ 10 K)	mbar/ (10 K · m_{Cap})	(psi/ (10 K · m_{Cap}))	mbar/ 10 K	(psi/ 10 K)	mbar	(psi)
Sandwich design or with flange to EN 1092-1	DN 50 without tube	59	(2.32)	0.3	(0.0043)	0.3	(0.0045)	0.3	(0.0045)	250	(3.626)
	DN 50 with tube	45	(1.89)	1.26	(0.018)	1.7	(0.025)	1.7	(0.025)	250	(3.626)
	DN 80 without tube	89	(3.50)	0.05	(0.001)	0.05	(0.001)	0.05	(0.0007)	50	(0.725)
	DN 80 with tube	72	(2.83)	0.24	(0.004)	0.17	(0.003)	0.17	(0.003)	100	(1.45)
	DN 100 without tube	89	(3.50)	0.05	(0.001)	0.07	(0.001)	0.07	(0.001)	50	(0.725)
	DN 100 with tube	89	(3.50)	0.1	(0.002)	0.07	(0.001)	0.07	(0.001)	50	(0.725)
	DN 125 without tube	124	(4.88)	0.05	(0.001)	0.03	(0.0004)	0.03	(0.0004)	20	(0.29)
	DN 125 with tube	124	(4.88)	0.05	(0.001)	0.03	(0.0004)	0.03	(0.0004)	20	(0.29)
Sandwich design with flange to ASME B16.5	2 inch without tube	59	(2.32)	0.3	(0.0043)	0.3	(0.0043)	0.3	(0.0045)	250	(3.626)
	2 inch with tube	45	(1.89)	1.26	(0.018)	1.7	(0.025)	1.7	(0.025)	250	(3.626)
	3 inch without tube	89	(3.50)	0.05	(0.001)	0.05	(0.0007)	0.05	(0.0007)	50	(0.725)
	3 inch with tube	72	(2.83)	0.24	(0.004)	0.17	(0.003)	0.17	(0.003)	100	(1.45)
	4 inch without tube	89	(3.50)	0.05	(0.001)	0.07	(0.001)	0.07	(0.001)	50	(0.725)
	4 inch with tube	89	(3.50)	0.1	(0.002)	0.07	(0.001)	0.07	(0.001)	50	(0.725)
	5 inch without tube	124	(4.88)	0.05	(0.001)	0.03	(0.0004)	0.03	(0.0004)	20	(0.29)
	5 inch with tube	124	(4.88)	0.05	(0.001)	0.03	(0.0004)	0.03	(0.0004)	20	(0.29)
Remote seal, screwed gland design	DN 50	52	(2.05)	1	(0.015)	0.83	(0.012)	0.83	(0.012)	250	(3.626)
Remote seal with union nut to DIN 11851	DN 50	52	(2.05)	1	(0.015)	0.83	(0.012)	0.83	(0.012)	250	(3.626)
	DN 65	59	(2.32)	0.7	(0.010)	0.67	(0.010)	0.67	(0.010)	250	(3.626)
	DN 80	72	(2.83)	0.24	(0.004)	0.17	(0.003)	0.17	(0.003)	100	(1.450)
Remote seal with threaded socket to DIN 11851	DN 50	52	(2.05)	1	(0.015)	0.83	(0.012)	0.83	(0.012)	250	(3.626)
	DN 65	59	(2.32)	0.7	(0.010)	0.67	(0.010)	0.67	(0.010)	250	(3.626)
	DN 80	72	(2.83)	0.24	(0.004)	0.17	(0.003)	0.17	(0.003)	100	(1.450)
Clamp connection	2 inch	40	(1.57)	1	(0.015)	2.5	(0.036)	2.5	(0.036)	2000	(29.01)
	2½ inch	59	(2.32)	0.7	(0.010)	0.67	(0.010)	0.67	(0.010)	250	(3.626)
	3 inch	72	(2.83)	0.24	(0.004)	0.17	(0.003)	0.17	(0.003)	100	(1.450)

Remarks:

- Values apply for the filling liquids silicone oil M5, silicone oil M50, high-temperature oil, halocarbon oil and food oil (FDA listed).
- Values apply to stainless steel as the diaphragm material.

© Siemens 2020

Temperature error inline seals

Temperature errors of inline seals when connected to pressure transmitters for gauge pressure and absolute pressure, and with single-sided connection to pressure transmitters for differential pressure

Nominal diameter/ design	Temperature error of remote seal f_{RS}		Temperature error of capillary f_{Cap}		Temperature error of process flange/connection spigot f_{PF}		Recommended min. measuring spans (guidance values, observe temperature error)	
	mbar/10 K	(psi/10 K)	mbar/10 K	(psi/10 K)	mbar/10 K	(psi/10 K)	mbar	(psi)
DN 25 (1 inch)	6.0	(0.0870)	8.5	(0.123)	8.5	(0.123)	1000	(14.5)
DN 40 (1½ inch)	4.5	(0.065)	4.5	(0.065)	4.5	(0.065)	250	(3.63)
DN 50 (2 inch)	4.0	(0.058)	3.0	(0.044)	3.0	(0.044)	100	(1.45)
DN 80 (3 inch)	9.5	(0.138)	5.0	(0.073)	5.0	(0.073)	100	(1.45)
DN 100 (4 inch)	8.0	(0.012)	3.0	(0.044)	3.0	(0.044)	100	(1.45)

Temperature errors of inline seals with double-sided connection to pressure transmitters for differential pressure

Nominal diameter/ design	Temperature error of remote seal f_{RS}		Temperature error of capillary f_{Cap}		Temperature error of process flange/connection spigot f_{PF}		Recommended min. measuring spans (guidance values, observe temperature error)	
	mbar/10 K	(psi/10 K)	mbar/10 K	(psi/10 K)	mbar/10 K	(psi/10 K)	mbar	(psi)
DN 25 (1 inch)	2.3	(0.033)	1.8	(0.026)	1.8	(0.026)	1000	(14.5)
DN 40 (1½ inch)	0.8	(0.012)	0.3	(0.004)	0.3	(0.004)	250	(3.63)
DN 50 (2 inch)	0.3	(0.004)	0.1	(0.002)	0.1	(0.002)	100	(1.45)
DN 80 (3 inch)	3.0	(0.044)	0.5	(0.007)	0.5	(0.007)	100	(1.45)
DN 100 (4 inch)	1.0	(0.015)	0.1	(0.002)	0.1	(0.002)	100	(1.45)

Remarks:

- Values apply for the filling liquids silicone oil M5, silicone oil M50, high-temperature oil, halocarbon oil and food oil (FDA listed).
- Half the values apply to glycerin/water mixture as the filling liquid.
- Values apply to stainless steel as the diaphragm material.
- Diaphragm thickness 0.05 mm (0.002 inch) for DN 25/DN 40/DN 50 and 0.1 mm (0.004 inch) for DN 80/DN 100

© Siemens 2020

Calculation of the temperature error

The following equation is used to calculate the temperature error:

$$dp = (\vartheta_{RS} - \vartheta_{Cal}) \cdot f_{RS} + (\vartheta_{Cap} - \vartheta_{Cal}) \cdot l_{Cap} \cdot f_{Cap} + (\vartheta_{TR} - \vartheta_{Cal}) \cdot f_{PF}$$

dp	Additional temperature error (mbar)
ϑ_{RS}	Temperature on remote seal diaphragm (generally corresponds to temperature of medium)
ϑ_{Cal}	Calibration (reference) temperature (20 °C (68 °F))
f_{RS}	Temperature error of remote seal
ϑ_{Cap}	Ambient temperature on the capillaries
l_{Cap}	Capillary length
f_{Cap}	Temperature error of capillaries
ϑ_{TR}	Ambient temperature on pressure transmitter
f_{PF}	Temperature error of the oil filling in the process flanges of the pressure transmitter

Example of temperature error calculation

Existing conditions:

SITRANS P pressure transmitter for differential pressure, 250 mbar, set to 0 ... 100 mbar, with DN 100 remote seal diaphragms without tube, diaphragm made of stainless steel, mat. No. 1.4404/316L	f_{RS} = 0.05 mbar/10 K (0.039 inH_2O/10 K)
Capillary length	l_{Cap} = 6 m (19.7 ft)
Capillaries fitted on both sides	f_{Cap} = 0.07 mbar/(10 K · m_{Cap}) (0.028 inH_2O/(10 K · m_{Cap}))
Filling liquid silicone oil M5	f_{PF} = 0.07 mbar/10 K (0.028 inH_2O/10 K)
Process temperature	ϑ_{RS} = 100 °C (212 °F)
Temperature on the capillaries	ϑ_{Cap} = 50 °C (122 °F)
Temperature on pressure transmitter	ϑ_{TR} = 50 °C (122 °F)
Calibration temperature	ϑ_{Cal} = 20 °C (68 °F)

Required:

Additional temperature error of remote seals: dp

Calculation:

in mbar

dp = (100 °C – 20 °C) · 0.05 mbar/10 K + (50 °C – 20 °C) · 6 m · 0.07 mbar/(10 K · m) + (50 °C – 20 °C) · 0.07 mbar/10 K

dp = 0.4 mbar + 1.26 mbar + 0.21 mbar

in inH_2O

dp = (212 °F - 68 °F) · 0.039 inH_2O/10 K + (112 °F - 68 °F) · 19.7 ft · 0.028 inH_2O/(10 K · 3.28 ft) + (112 °F - 68 °F) · (0.028 inH_2O/10 K)

dp = 0.16 inH_2O + 0.51 inH_2O + 0.08 inH_2O

Result:

dp = 1.87 mbar (0.75 inH_2O)
(corresponds to 2.27% of set measuring span)

Note

The determined temperature error only applies to the error resulting from connection of the remote seal.

The transmission response of the respective transmitter is not included in this consideration.
It must be calculated separately, and the resulting error added to the error determined above from connection of the remote seal.

Dependence of temperature error on diaphragm material

The temperature errors listed in the previous table are based on the use of stainless steel as the diaphragm material. If other diaphragm materials are used, the temperature errors change as follows:

Diaphragm material	Change in temperature error of remote seal
	Increase in values by
Stainless steel, Duplex, ...	See previous tables
Hastelloy C4, mat. No. 2.4602	50 %
Hastelloy C276, mat. No. 2.4819	50 %
Monel 400, mat. No. 2.4360	60 %
Tantalum	50 %
Titanium	50 %
PTFE coating on stainless steel diaphragm	80 %
ECTFE coating or PFA coating on stainless steel diaphragm	100 %
Gold coating on stainless steel diaphragm	40 %
Inconel	50 %
Incoloy	50 %

Maximum temperature of medium

Note

When taking into account the maximum medium temperature, the application limits of the fill fluids and gaskets used as well as the pressure/temperature limits of the respective process connections must also be taken into consideration.
The following maximum temperatures of the medium apply depending on the material of the wetted parts.

Material	Max. medium temperature	Min./max. Pressure
Stainless steel, mat. no. 1.4404/31L	400 °C (752 °F)	No restrictions
PTFE coating	200 °C (392 °F)	< 0 bar (0 psi); gauge pressure
	260 °C (500 °F)	0 bar (0 psi) ... 25 bar (363 psi); gauge pressure
	150 °C (302 °F)	25 bar (363 psi) ... 40 bar (580 psi); gauge pressure
	50 °C (302 °F)	40 bar (580 psi) ... 60 bar (870 psi); gauge pressure
ECTFE coating	150 °C (302 °F)	For pressures < 1 bar (14.5 psi) on request
PFA coating	200 °C (392 °F)	< 0 bar (0 psi); gauge pressure
	260 °C (500 °F)	25 bar (363 psi)/40 bar (580 psi); gauge pressure
	150 °C (302 °F)	40 bar (580 psi)/60 bar (870 psi); gauge pressure
	50 °C (302 °F)	For pressures < 1 bar (14.5 psi) on request
Hastelloy C4, mat. no. 2.4610	400 °C (752 °F)	No restrictions
Hastelloy C276, mat. no. 2.4819	400 °C (752 °F)	No restrictions
Hastelloy C22, mat. no. 2.4602	400 °C (752 °F)	No restrictions
Monel 400, mat. no. 2.4360	400 °C (752 °F)	No restrictions
Tantalum	300 °C (572 °F)	No restrictions
Duplex, mat. no. 1.4462	250 °C (482 °F)	No restrictions
Titanium	150 °C (302 °F)	No restrictions
Inconel	400 °C (752 °F)	No restrictions
Incoloy	400 °C (752 °F)	No restrictions
Gold coating	400 °C (752 °F)	No restrictions

© Siemens 2020

Maximum capillary length for diaphragm seals (guidance values)

Nom. diam.		Max. length of capillary			
		Diaphragm seal		Inline seal	
		m	(ft)	m	(ft)
DN 25	(1 inch)	2.5	(8.2)	2.5	(8.2)
DN 32	(1¼ inch)	2.5	(8.2)	2.5	(8.2)
DN 40	(1½ inch)	4	(13.1)	6	(19.7)
DN 50	(2 inch)	6	(19.7)	10	(32.8)
DN 65	(2½ inch)	8	(26.2)	10	(32.8)
DN 80	(3 inch)	15	(49.1)	10	(32.8)
DN 100	(4 inch)	15	(49.1)	10	(32.8)
DN 125	(5 inch)	15	(49.1)	-	-

Response times

The values listed in the following table are the response times (in seconds per meter of capillary) for a change in pressure which corresponds to the set measuring span.

The listed values must be multiplied by the respective length of the capillary, or with transmitters for differential pressure and flow by the total length of both capillaries.

The response times are independent of the set measuring span within the range of the respective transmitter. The response times are of insignificant importance for measuring spans above 10 bar (145 psi). The response times of the pressure transmitters are not considered in the table.

Filling liquid	Density		Temperature on capillary		Response time in s/m (s/ft) with max. measuring span of pressure transmitter					
	kg/dm³	(lb/in³)	°C	(°F)	250 mbar	(101 inH_2O)	600 mbar	(241 inH_2O)	1600 mbar	(643 inH_2O)
Silicone oil M5	0.914	(0.033)	+60	(140)	0.06	(0.018)	0.02	(0.006)	0.01	(0.003)
			+20	(68)	0.11	(0.034)	0.02	(0.006)	0.02	(0.006)
			- 20	(-4)	0.3	(0.091)	0.12	(0.037)	0.05	(0.015)
Silicone oil M50	0.966	(0.035)	+60	(140)	0.6	(0.183)	0.25	(0.076)	0.09	(0.027)
			+20	(68)	0.61	(0.186)	0.26	(0.079)	0.1	(0.030)
			- 20	(-4)	1.69	(0.515)	0.71	(0.216)	0.27	(0.082)
High-temperature oil	1.070	(0.039)	+60	(140)	0.14	(0.043)	0.06	(0.018)	0.02	(0.006)
			+20	(68)	0.65	(0.198)	0.27	(0.082)	0.1	(0.030)
			-10	(14)	3.96	(1.207)	1.65	(0.503)	0.62	(0.189)
Halocarbon oil	1.968	(0.071)	+60	(140)	0.07	(0.021)	0.03	(0.009)	0.01	(0.003)
			+20	(68)	0.29	(0.088)	0.12	(0.037)	0.05	(0.015)
			- 20	(-4)	2.88	(0.878)	1.2	(0.366)	0.45	(0.137)
Food oil (FDA listed)	0.920	(0.033)	+60	(140)	0.75	(0.229)	0.33	(0.101)	0.17	(0.052)
			+20	(68)	4	(1.220)	1.75	(0.534)	0.67	(0.204)
			- 20	(-4)	20	(6.100)	8.5	(2.593)	3.25	(0.991)

Permissible data of filling liquids for pressure and temperature see diagrams on page 1/404 ff.

© Siemens 2020

Overview

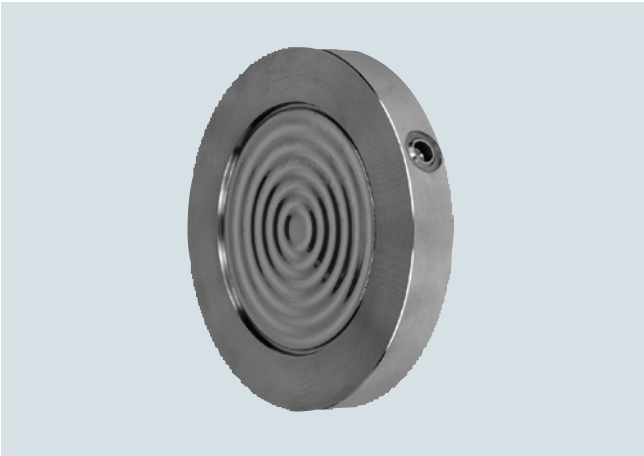

Diaphragm seals of sandwich design

Technical specifications

Diaphragm seals of sandwich design	
Nominal diameter	Nominal pressure
• DN 50	PN 16 ... PN 400
• DN 80	PN 16 ... PN 400
• DN 100	PN 16 ... PN 400
• DN 125	PN 16 ... PN 400
• 2 inch	Class 150 ... class 2500
• 3 inch	Class 150 ... class 2500
• 4 inch	Class 150 ... class 2500
• 5 inch	Class 150 ... class 2500
Sealing surface	
• For stainless steel, mat. No. 1.4404/316L	To EN 1092-1, form B1 or ASME B16.5 RF 125 ... 250 AA
• For the other materials	To EN 1092-1, form B2 or ASME B16.5 RFSF
Materials	
• Main body	Stainless steel mat. no. 1.4404/316L
• Wetted parts	Stainless steel mat. no. 1.4404/316L
	• Without coating
	• PTFE coating
	• ECTFE coating (for vacuum on request)
	• PFA coating
	Monel 400, mat. No. 2.4360
	Hastelloy C276, mat. No. 2.4819
	Hastelloy C4, mat. No. 2.4602
	Hastelloy C22, mat. no. 2.4602
	Tantalum
	Titanium, mat. no. 3.7035
	Nickel 201
	Duplex 2205, mat. no. 1.4462
	Stainless steel 316L, gold plated, thickness approx. 25 µm
• Capillary	Stainless steel, mat. No. 1.4571/316Ti
• Sheath	Spiral protective tube made of stainless steel, mat. No. 1.4404/316L

Sealing material in the process flanges	
• For pressure transmitters, absolute pressure transmitters and low-pressure applications	Copper
• For other applications	Viton
Maximum pressure	See above and the technical data of the pressure transmitters
Tube length	Without tube as standard (tube available on request)
Capillary	
• Length	Max. 10 m (32.8 ft), longer lengths on request
• Internal diameter	max. 2 mm (0.079 inch)
• Minimum bending radius	150 mm (5.9 inch)
Filling liquid	Silicone oil M5
	Silicone oil M50
	High-temperature oil
	Halocarbon oil (for measuring O_2)
	Food oil (FDA listed)
Permissible ambient temperature	Dependent on the pressure transmitter and the filling liquid of the remote seal
	More information can be found in the technical data of the pressure transmitters and in the section "Technical data of filling liquid" in the Technical description to the remote seals
Weight	Approx. 4 kg (8.82 lb)
Certificate and approvals	
Classification according to pressure equipment directive (DGRL 2014/68/EU)	For gases of fluid group 1 and liquids of fluid group 1; complies with requirements of article 4, paragraph 3 (sound engineering practice)

© Siemens 2020

Selection and Ordering data	Article No. Ord.code
Diaphragm seal	
Sandwich-type design, with flexible capillary connected to a SITRANS P transmitter (order separately):	
for pressure 7MF2033-...; 7MF403.-... and 7MF423.-... together with Order code "V01" (Negative pressure service) and 7MF802.-...[1]; Scope of delivery (1 off) ↗	**7MF4900-**
for absolute pressure 7MF433.-...; Scope of delivery (1 off) ↗	**7MF4901-**
for differential pressure and flow 7MF243.-...;7MF443.-... and 7MF54..-...; scope of delivery 2 off ↗	**7MF4903-**
↗ Click on the Article No. for the online configuration in the PIA Life Cycle Portal.	**1 ■■■■ - ■B ■■■**
Nominal diameter and nominal pressure	
• DN 25	**Z J0A**
• DN 40	**Z J0B**
• DN 50 PN 16 ... 400	**A**
(recommended only for pressure transmitters for pressure)	
• DN 80 PN 16 ... 400	**B**
• DN 100 PN 16 ... 400	**C**
• DN 125 PN 16 ... 400	**D**
• 2 inch Class 150 ... 2500	**E**
(recommended only for pressure transmitters for pressure)	
• 3 inch Class 150 ... 2500	**H**
• 4 inch Class 150 ... 2500	**L**
• 5 inch Class 150 ... 2500	**N**
Smooth sealing surface to EN 1092-1, form B1 or to ASME B16.5 RF 125 ... 250 AA	
Other version Add Order code and plain text: Nominal diameter: ...; Nominal pressure: ... Sealing surface: see "Technical data"	**Z J1Y**
Wetted parts materials	
• Stainless steel 316L	
- without coating	**A**
- with PTFE coating[2]	**E0**
- with ECTFE coating [2) 3) 4)]	**F**
- with PFA coating [2) 4)]	**D**
• Monel 400, mat. No. 2.4360	**G**
• Hastelloy C276, mat. No. 2.4819	**J**
• Hastelloy C4, mat. No. 2.4602	**U0**
• Hastelloy C22, mat. No. 2.4602	**V0**
• Tantalum	**K**
• Titanium, mat. No. 3.7035 (max. 150 °C (302 °F))	**L0**
• Nickel 201 (max. 260 °C (500 °F))	**M0**
• Duplex 2205, mat. no. 1.4462	**Q**
• Duplex 2205, mat. no. 1.4462, incl. main body	**R**
• Stainless steel 316L, gold plated, thickness approx. 25 µm	**S0**
Tube length	
• without tube	**0**
Other version: Add Order code and plain text: Wetted parts materials: ..., Tube length: ...	**Z8 K1Y**

Selection and Ordering data	Article No. Ord.code
Diaphragm seal	
Sandwich-type design, with flexible capillary connected to a SITRANS P transmitter (order separately):	
for pressure 7MF2033-...; 7MF403.-... and 7MF423.-... together with Order code "V01" (Negative pressure service) and 7MF802.-...[1]; Scope of delivery (1 off)	**7MF4900-**
for absolute pressure 7MF433.-...; Scope of delivery (1 off)	**7MF4901-**
for differential pressure and flow 7MF243.-...;7MF443.-... and 7MF54..-...; scope of delivery 2 off	**7MF4903-**
	1 ■■■■ - ■B ■■■
Customer-specific tubus length	
Specify customer-specific length with Y44, see Order Code	
• Wetted parts materials: Stainless steel without foil	
Range / Standard length	
20 ... 50 mm (0.79 ... 1.97") / 50 mm (1.97")	**A1**
51 ... 100 mm (2.01 ... 3.94") / 100 mm (3.94")	**A2**
101 ... 150 mm (3.98 ... 5.91") / 150 mm (5.91")	**A3**
151 ... 200 mm (5.94 ... 7.87") / 200 mm (7.87")	**A4**
201 ... 250 mm (7.91 ... 9.84") / 250 mm (9.84")	**A5**
• Wetted parts materials: Stainless steel coated with ECTFE	
Range / Standard length	
20 ... 50 mm (0.79 ... 1.97") / 50 mm (1.97")	**F1**
51 ... 100 mm (2.01 ... 3.94") / 100 mm (3.94")	**F2**
101 ... 150 mm (3.98 ... 5.91") / 150 mm (5.91")	**F3**
151 ... 200 mm (5.94 ... 7.87") / 200 mm (7.87")	**F4**
201 ... 250 mm (7.91 ... 9.84") / 250 mm (9.84")	**F5**
• Wetted parts materials: Stainless steel coated with PFA	
Range / Standard length	
20 ... 50 mm (0.79 ... 1.97") / 50 mm (1.97")	**D1**
51 ... 100 mm (2.01 ... 3.94") / 100 mm (3.94")	**D2**
101 ... 150 mm (3.98 ... 5.91") / 150 mm (5.91")	**D3**
151 ... 200 mm (5.94 ... 7.87") / 200 mm (7.87")	**D4**
201 ... 250 mm (7.91 ... 9.84") / 250 mm (9.84")	**D5**
• Wetted parts materials: Monel 400	
Range / Standard length	
20 ... 50 mm (0.79 ... 1.97") / 50 mm (1.97")	**G1**
51 ... 100 mm (2.01 ... 3.94") / 100 mm (3.94")	**G2**
101 ... 150 mm (3.98 ... 5.91") / 150 mm (5.91")	**G3**
151 ... 200 mm (5.94 ... 7.87") / 200 mm (7.87")	**G4**
• Wetted parts materials: Hastelloy C276	
Range / Standard length	
20 ... 50 mm (0.79 ... 1.97") / 50 mm (1.97")	**J1**
51 ... 100 mm (2.01 ... 3.94") / 100 mm (3.94")	**J2**
101 ... 150 mm (3.98 ... 5.91") / 150 mm (5.91")	**J3**
151 ... 200 mm (5.94 ... 7.87") / 200 mm (7.87")	**J4**
• Wetted parts materials: Tantalum	
Range / Standard length	
20 ... 50 mm (0.79 ... 1.97") / 50 mm (1.97")	**K1**
51 ... 100 mm (2.01 ... 3.94") / 100 mm (3.94")	**K2**
101 ... 150 mm (3.98 ... 5.91") / 150 mm (5.91")	**K3**
151 ... 200 mm (5.94 ... 7.87") / 200 mm (7.87")	**K4**

© Siemens 2020

Diaphragm seals of sandwich design with flexible capillary

Selection and Ordering data	Article No. Ord.code
Diaphragm seal	
Sandwich-type design, with flexible capillary connected to a SITRANS P transmitter (order separately):	
for pressure 7MF2033-...; 7MF403.-... and 7MF423.-... together with Order code "V01" (Negative pressure service) and 7MF802.-...[1]; Scope of delivery (1 off)	**7MF4900-**
for absolute pressure 7MF433.-...; Scope of delivery (1 off)	**7MF4901-**
for differential pressure and flow 7MF243.-...;7MF443.-... and 7MF54..-...; scope of delivery 2 off	**7MF4903-**
	1 ■■■ - ■B ■■■
Filling liquid	
• Silicone oil M5	**1**
• Silicone oil M50	**2**
• High-temperature oil	**3**
• Halocarbon oil (for measuring O_2)[5]	**4**
• Food oil (FDA listed)l	**7**
Other version Add Order code and plain text: Filling liquid: ...	**9 M1Y**
Length of capillary[6]	
• 1.0 m (3.28 ft)	**2**
• 1.6 m (5.25 ft)	**3**
• 2.5 m (8.20 ft)	**4**
• 4.0 m (13.1 ft)	**5**
• 6.0 m (19.7 ft)	**6**
• 8.0 m (26.25 ft)	**7**
• 10.0 m (32.8 ft)	**8**
Special lengths for capillaries	
• 2.0 m (6.56 ft)	**9 N1C**
• 3.0 m (9.84 ft)	**9 N1E**
• 5.0 m (16.40 ft)	**9 N1G**
• 7.0 m (23.97 ft)	**9 N1J**
• 9.0 m (29.53 ft)	**9 N1L**
only for 7MF4903-...	
• 11.0 m (36.09 ft)	**9 N1N**
• 12.0 m (39.37 ft)	**9 N1P**
• 13.0 m (42.65 ft)	**9 N1Q**
• 14.0 m (45.93 ft)	**9 N1R**
• 15.0 m (49.21 ft)	**9 N1S**

1) With 7MF802.-... and the measuring cells Q, S, T and U also order negative pressure service version.
2) Only possible up to max. PN 100.
3) For vacuum on request
4) Only for use in non-hazardous atmospheres.
5) Oil- and grease- free cleaning to DIN 25410, level 2 and packaging included in the scope of delivery. Refer to "Further designs" C10 and E10.
6) Max. capillary length, see section "Technical description".

Selection and Ordering data	Order code
Further designs	
Please add "**-Z**" to Article No. and specify Order code.	
Customer-specific tubus length	**Y44**
Select range, enter desired length in plain text (No entry = standard length)	
Spark arrestor	
With spark arrestor for mounting on zone 0 (including documentation)	
• Pressure and absolute pressure	**A01**
• for differential pressure transmitters	**A02**
Remote seal nameplate	**B20**
Attached out of stainless steel, contains Article No. and order number of the remote seal supplier	
Oil- and grease-free cleaned version	**C10**
Oil- and grease-free cleaned and packed version, not for oxygen application, only in conjunction with halocarbon oil fill fluid, certified by certificate acc. to EN 10204-2.2	
Quality Inspection Certificate (5-point characteristic curve test) according to IEC 60770-2	**C11**
Inspection certificate	**C12**
to EN 10204, section 3.1	
2.2 Certificate of FDA approval of fill oil	**C17**
Only in conjunction with "Food-grade oil" fill liquid (FDA listed)"	
Functional safety certificate ("SIL 2") to IEC 61508	**C20**
(Only in conjunction with the Order code "C20" in the case of SITRANS P DSIII transmitter)	
Functional safety certificate ("SIL 2/3") to IEC 61508	**C23**
(Only in conjunction with the Order code "C23" in the case of SITRANS P DSIII transmitter)	
Certification acc. to NACE MR-0175	**D07**
Includes inspection certificate 3.1 according to EN 10204 (only for wetted parts made of stainless steel 1.4404/316L and Hastelloy C276)	
Certification acc. to NACE MR-0103	**D08**
Includes inspection certificate 3.1 according to EN 10204 (only for wetted parts made of stainless steel 1.4404/316L and Hastelloy C276)	
Oil- and grease-free cleaned version	**E10**
Oil- and grease-free cleaned and packed version, only for oxygen application, only inert fill fluid may be used. Max. temperature: 60 °C (140 °F), max. pressure 50 bar (725 psi), only in connection with halocarbon oil, certified by certificate acc. to EN 10204-2.2	
Epoxy painting	**E15**
(not possible with vacuum-proof design and not for 7MF4901-...)	
Color: transparent, coverage: front and rear of the remote seal, capillary(ies) or connecting tube, process connection of the transmitter. With transmitters 7MF40.. and 7MF42.., only possible with process connection G½B according to EN 837-1	
One-sided mounting on differential pressure transmitters	
(only for 7MF4900-...)	
on high-pressure side	**H10**
on low-pressure side	**H11**

© Siemens 2020

Selection and Ordering data	Order code
Further designs	
Please add "**-Z**" to Article No. and specify Order code.	
Sealing surface smooth, form B2 or RFSF (Stainless steel diaphragm)	**J11**
previously DIN 2501, form E	
Sealing surface B1 or ASME B16.5 RF 125 ... 250 AA	**J12**
instead of sealing surface B2 or RFSF (only for wetted parts made of Hastelloy C276 (2.4819), tantalum and Duplex 2205 (1.4462) and for nominal sizes 2", 3", DN 50 and DN 80)	
Sealing surface groove, EN 1092-1, form D	**J14**
instead of sealing surface B1 (only for wetted parts made of stainless steel 316L)	
Sealing surface RJF (groove, previously RTJ) ASME B16.5	**J24**
instead of sealing surface ASME B16.5 RF 125 ... 250 AA (only for wetted parts made of stainless steel 316L)	
Sealing surface with spring according to EN 1092-1, form C, (previously DIN 2512, form F) in stainless steel 316L	
DN 25	**J30**
DN 40	**J31**
DN 50	**J32**
DN 80	**J33**
DN 100	**J34**
DN 125	**J35**
Sealing surface with male face according to EN 1092-1, form E (previously DIN 2512, form V13) in stainless steel 316L	
DN 25	**J40**
DN 40	**J41**
DN 50	**J42**
DN 80	**J43**
DN 100	**J44**
DN 125	**J45**
Sealing surface with female face according to EN 1092-1, form F (previously DIN 2512, form R13) in stainless steel 316L	
DN 25	**J50**
DN 40	**J51**
DN 50	**J52**
DN 80	**J53**
DN 100	**J54**
DN 125	**J55**

Selection and Ordering data	Order code
Further designs	
Please add "**-Z**" to Article No. and specify Order code.	
PE protective tube over the spiral protective tube of the capillaries (color: white)	
1.0 m (3.28 ft)	**N20**
1.6 m (5.25 ft)	**N21**
2.0 m (6.56 ft)	**N22**
2.5 m (8.20 ft)	**N23**
3.0 m (9.84 ft)	**N24**
4.0 m (13.12 ft)	**N25**
5.0 m (16.40 ft)	**N26**
6.0 m (19.69 ft)	**N27**
7.0 m (22.97 ft)	**N28**
8.0 m (26.25 ft)	**N29**
9.0 m (29.53 ft)	**N30**
10.0 m (32.81 ft)	**N31**
only for 7MF4903-...	
11.0 m (36.09 ft)	**N32**
12.0 m (39.37 ft)	**N33**
13.0 m (42.65 ft)	**N34**
14.0 m (45.93 ft)	**N35**
15.0 m (49.21 ft)	**N36**
PTFE protective tube over the spiral protective tube of the capillaries (color: transparent)	
1.0 m (3.28 ft)	**N40**
1.6 m (5.25 ft)	**N41**
2.0 m (6.56 ft)	**N42**
2.5 m (8.20 ft)	**N43**
3.0 m (9.84 ft)	**N44**
4.0 m (13.12 ft)	**N45**
5.0 m (16.40 ft)	**N46**
6.0 m (19.69 ft)	**N47**
7.0 m (22.97 ft)	**N48**
8.0 m (26.25 ft)	**N49**
9.0 m (29.53 ft)	**N50**
10.0 m (32.81 ft)	**N51**
only for 7MF4903-...	
11.0 m (36.09 ft)	**N52**
12.0 m (39.37 ft)	**N53**
13.0 m (42.65 ft)	**N54**
14.0 m (45.93 ft)	**N55**
15.0 m (49.21 ft)	**N56**

© Siemens 2020

Diaphragm seals of sandwich design with flexible capillary

Selection and Ordering data	Order code
Further designs	
Please add "**-Z**" to Article No. and specify Order code.	
PVC protective tube	
over the spiral protective tube of the capillaries (color: black)	
1.0 m (3.28 ft)	**N60**
1.6 m (5.25 ft)	**N61**
2.0 m (6.56 ft)	**N62**
2.5 m (8.20 ft)	**N63**
3.0 m (9.84 ft)	**N64**
4.0 m (13.12 ft)	**N65**
5.0 m (16.40 ft)	**N66**
6.0 m (19.69 ft)	**N67**
7.0 m (22.97 ft)	**N68**
8.0 m (26.25 ft)	**N69**
9.0 m (29.53 ft)	**N70**
10.0 m (32.81 ft)	**N71**
only for 7MF4903-...	
11.0 m (36.09 ft)	**N72**
12.0 m (39.37 ft)	**N73**
13.0 m (42.65 ft)	**N74**
14.0 m (45.93 ft)	**N75**
15.0 m (49.21 ft)	**N76**
Negative pressure service	
for use in low-pressure range for transmitters for	
• gauge and absolute pressure from the pressure series	**V01**
• differential pressure	**V03**
Extended negative pressure service	
for use in low-pressure range for transmitters for	
• gauge and absolute pressure from the pressure series	**V51**
• differential pressure	**V53**

© Siemens 2020

Dimensional drawings

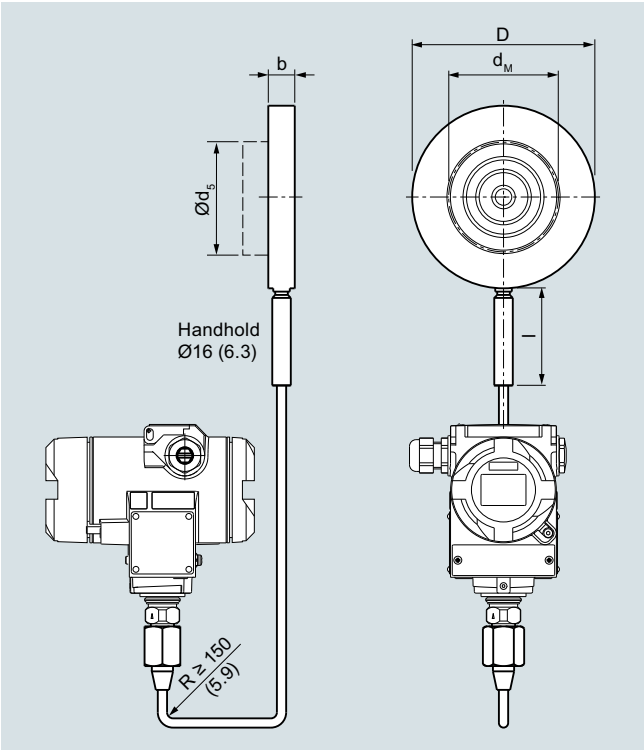

Diaphragm seals of sandwich design with flexible capillary for connection to SITRANS P pressure transmitters for pressure, dimensions in mm (inch)

Connection to EN 1092-1

Nom. diam.	Nominal pressure	b	D	d_5	d_M	l
		mm	mm	mm	mm	mm
DN 50	PN 16 ... PN 400	20	102	48.3	45[1)]	100
DN 80		20	138	76	72[2)]	100
DN 100		20	158	94	89	100
DN 125		22	188	125	124	100

Connection to ASME B16.5

Nom. diam.	Nominal pressure	b	D	d_5	d_M	l
	lb/sq.in.	mm	mm	mm	mm	mm
		(inch)	(inch)	(inch)	(inch)	(inch)
2 inch	150 2500	20	100	48.3	45[1)]	100
		(0.79)	(3.94)	(1.9)	(1.77)	(3.94)
3 inch		20	134	72	72[2)]	100
		(0.79)	(5.28)	3	(2.83)	(3.94)
4 inch		20	158	94	89	100
		(0.79)	(6.22)	(3.69)	(2.32)	(3.94)
5 inch		22	186	125	124	100
		(0.87)	(7.32)	(4.92)	(4.88)	(3.94)

d: Inside diameter of gasket according to EN 1092-1/ASME B16.5

d_M: Effective diaphragm diameter

1) 59 mm = 2.32 inch with tube length L = 0

2) 89 mm = 3½ inch with tube length L = 0

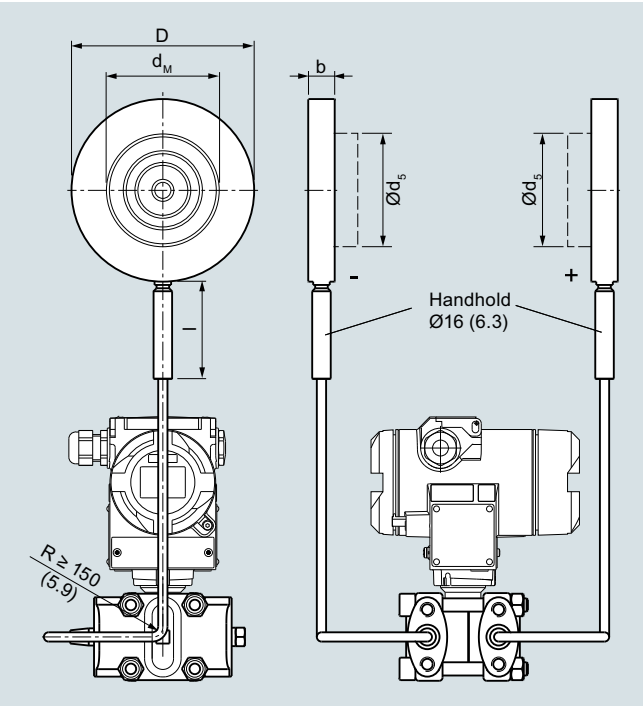

Diaphragm seals of sandwich design (without flange) with flexible capillary for connection to SITRANS P pressure transmitters for absolute pressure or differential pressure and flow, dimensions in mm (inch)

Connection to EN 1092-1

Nom. diam.	Nominal pressure	b	D	d_5	d_M	l
		mm	mm	mm	mm	mm
DN 50	PN 16 ... PN 400	20	102	48.3	45[1)]	100
DN 80		20	138	76	72[2)]	100
DN 100		20	158	94	89	100
DN 125		22	188	125	124	100

Connection to ASME B16.5

Nom. diam.	Nominal pressure	b	D	d_5	d_M	l
	lb/sq.in.	mm	mm	mm	mm	mm
		(inch)	(inch)	(inch)	(inch)	(inch)
2 inch	150 ... 2500	20	100	48.3	45[1)]	100
		(0.79)	(3.94)	(1.9)	(1.77)	(3.94)
3 inch		20	134	72	72[2)]	100
		(0.79)	(5.28)	3	(2.83)	(3.94)
4 inch		20	158	94	89	100
		(0.79)	(6.22)	(3.69)	(2.32)	(3.94)
5 inch		22	186	125	124	100
		(0.87)	(7.32)	(4.92)	(4.88)	(3.94)

d: Inside diameter of gasket according to EN 1092-1/ASME B16.5

d_M: Effective diaphragm diameter

1) 59 mm = 2.32 inch with tube length L = 0

2) 89 mm = 3½ inch with tube length L = 0

© Siemens 2020

Overview

Diaphragm seals of flange design

Technical specifications

Diaphragm seals of flange design with flexible capillary	
Nominal diameter	Nominal pressure
• DN 50 (recommendable only for pressure transmitters for pressure)	PN 10/16/25/40, PN 100
• DN 80	PN 10/16/25/40, PN 100
• DN 100	PN 10/16, PN 25/40
• DN 125	PN 16, PN 40
• 2 inch (recommendable only for pressure transmitters for pressure)	Class 150, class 300, class 400/600, class 900/1500
• 3 inch	Class 150, class 300, class 600
• 4 inch	Class 150, class 300, class 400
• 5 inch	Class 150, class 300, class 400
Sealing surface	
• For stainless steel, mat. No. 1.4404/316L	To EN 1092-1, form B1 or ASMR B16.5 RF 125 ... 250 AA
• For the other materials	To EN 1092-1, form B2 or ASME B16.5 RFSF
Materials	
• Main body	Stainless steel mat. no. 1.4404/316L
• Wetted parts	Stainless steel mat. no. 1.4404/316L
	• Without coating
	• PTFE coating
	• ECTFE coating (for vacuum on request)
	• PFA coating
	Monel 400, mat. No. 2.4360
	Hastelloy C276, mat. No. 2.4819
	Hastelloy C4, mat. No. 2.4602
	Hastelloy C22, W.-Nr. 2.4602
	Tantalum
	Titanium, W.-Nr. 3.7035
	Nickel 201
	Duplex 2205, mat. no. 1.4462
	Stainless steel 316L, gold plated, thickness approx. 25 µm
• Capillary	Stainless steel, mat. No. 1.4404/316L
• Sheath	Spiral protective tube made of stainless steel, mat. no. 1.4301/304
Sealing material in the process flanges	
• For pressure transmitters, absolute pressure transmitters and low-pressure applications	Copper
• For other applications	Viton
Maximum pressure	See above and the technical data of the pressure transmitter
Tube length	Without tube as standard (tube available on request)
Capillary	
• Length	Max. 10 m (32.8 ft), longer lengths on request
• Internal diameter	2 mm (0.079 inch)
• Minimum bending radius	150 mm (5.9 inch)
Filling liquid	
(for remote seals of sandwich and flange design)	Silicone oil M5
	Silicone oil M50
	High-temperature oil
	Halocarbon oil (for measuring O_2)
	Food oil (FDA listed)
Permissible ambient temperature	Dependent on the pressure transmitter and the filling liquid of the remote seal
	More information can be found in the technical data of the pressure transmitters and in the section "Technical data of filling liquid" in the Technical description to the remote seals
Weight	Approx. 4 kg (8.82 lb)
Certificate and approvals	
Classification according to pressure equipment directive (DGRL 2014/68/EU)	For gases of fluid group 1 and liquids of fluid group 1; complies with requirements of article 4, paragraph 3 (sound engineering practice)

© Siemens 2020

Selection and Ordering data	Article No. Ord. code
Diaphragm seal	
Flange design, with flexible capillary, connected to a pressure transmitter SITRANS P (order separately):	
for pressure 7MF2033-...; 7MF403.-... and 7MF423.-... (absolute pressure (gauge pressure series) together with Order code "V01" (Negative pressure service) and 7MF802.-...[1]; scope of delivery: 1 off ↗	**7MF4920-**
for absolute pressure (differential pressure series 7MF433.-...; scope of delivery: 1 off ↗	**7MF4921-**
for differential pressure and flow 7MF243.-...; 7MF443.-... and 7MF54..-...; scope of delivery: 2 off ↗	**7MF4923-**
↗ Click on the Article No. for the online configuration in the PIA Life Cycle Portal.	**1 ■■■■ - ■B ■■■**
Nominal diameter and nominal pressure	
• DN 25 PN 10/16/25/40	**Z J0A**
PN 63/100/160	**Z J0B**
• DN 40 PN 10/16/25/40	**Z J0C**
PN 63/100	**Z J0D**
PN 160	**Z J0E**
• DN 50 PN 10/16/25/40	**A**
PN 100	**B**
(DN 50 recommended only for pressure transmitters for pressure)	
• DN 80 PN 10/16/25/40	**D**
PN 100	**E**
• DN 100 PN 10/16	**G**
• DN 125 PN 25/40	**H**
PN 10/16	**J**
PN 25/40	**K**
• 1 inch Class 150	**Z J6A**
Class 300	**Z J6B**
Class 400/600	**Z J6C**
Class 900/1500	**Z J6D**
• 1½ inch Class 150	**Z J6E**
Class 300	**Z J6F**
Class 400/600	**Z J6G**
Class 900/1500	**Z J6H**
• 2 inch Class 150	**L**
Class 300	**M**
Class 400/600	**N**
Class 900/1500	**P**
(2 inch recommended only for pressure transmitters for pressure)	
• 3 inch Class 150	**Q**
Class 300	**R**
Class 600	**S**
• 4 inch Class 150	**T**
Class 300	**U**
Class 400	**V**
• 5 inch Class 150	**W**
Class 300	**X**
Class 400	**Y**
• JIS DN 50 10 K 316L	**Z J7A**
20 K 316L	**Z J7B**
• JIS DN 80 10 K 316L	**Z J7C**
20 K 316L	**Z J7D**
Smooth sealing surface to EN 1092-1, form B1 or to ASME B16.5 RF 125 ... 250 AA	
Other version Add Order code and plain text: Nominal diameter: ...; Nominal pressure: ... Sealing surface: See "Technical data"	**Z J1Y**

Selection and Ordering data	Article No. Ord. code
Diaphragm seal	
Flange design, with flexible capillary, connected to a pressure transmitter SITRANS P (order separately):	
for pressure 7MF2033-...; 7MF403.-... and 7MF423.-... (absolute pressure (gauge pressure series) together with Order code "V01" (Negative pressure service) and 7MF802.-...[1]; scope of delivery: 1 off	**7MF4920-**
for absolute pressure (differential pressure series 7MF433.-...; scope of delivery: 1 off	**7MF4921-**
for differential pressure and flow 7MF243.-...; 7MF443.-... and 7MF54..-...; scope of delivery: 2 off	**7MF4923-**
	1 ■■■■ - ■B ■■■
Wetted parts materials	
• Stainless steel 316L	
- without coating	**A**
- with PTFE coating	**E0**
- with ECTFE coating[2) 3)]	**F**
- with PFA coating [3)]	**D**
• Monel 400, mat. No. 2.4360	**G**
• Hastelloy C276, mat. No. 2.4819	**J**
• Hastelloy C4, mat. No. 2.4602	**U**
• Hastelloy C22, mat. No. 2.4602	**V0**
• Tantalum	**K0**
• Titanium, mat. No. 3.7035 (max. 150 °C (302 °F))	**L**
• Nickel 201 (max. 260 °C (500 °F))	**M0**
• Duplex 2205, mat. no. 1.4462	**Q0**
• Duplex 2205, mat. no. 1.4462, incl. main body	**R**
• Stainless steel 316L, gold plated, thickness approx. 25 µm	**S0**

© Siemens 2020

Diaphragm seals of flange design with flexible capillary

Selection and Ordering data	Article No. Ord. code
Diaphragm seal	
Flange design, with flexible capillary, connected to a pressure transmitter SITRANS P (order separately):	
for pressure 7MF2033-...; 7MF403.-... and 7MF423.-... (absolute pressure (gauge pressure series) together with Order code "V01" (Negative pressure service) and 7MF802.-...[1]; scope of delivery: 1 off	7MF4920-
for absolute pressure (differential pressure series 7MF433.-...; scope of delivery: 1 off	7MF4921-
for differential pressure and flow 7MF243.-...; 7MF443.-... and 7MF54..-...; scope of delivery: 2 off	7MF4923-
	1 ■■■■ - ■B ■■■
Tube length	
• without tube	0
Other version: Add Order code and plain text: Wetted parts materials: ..., Tube length: ...	Z8 K1Y
Customer-specific tubus length	
Specify customer-specific length with Y44, see Order Code	
• Wetted parts materials: Stainless steel without foil	
Range / Standard length	
20 ... 50 mm (0.79 ... 1.97") / 50 mm (1.97")	A1
51 ... 100 mm (2.01 ... 3.94") / 100 mm (3.94")	A2
101 ... 150 mm (3.98 ... 5.91") / 150 mm (5.91")	A3
151 ... 200 mm (5.94 ... 7.87") / 200 mm (7.87")	A4
201 ... 250 mm (7.91 ... 9.84") / 250 mm (9.84")	A5
• Wetted parts materials: Stainless steel coated with ECTFE	
Range / Standard length	
20 ... 50 mm (0.79 ... 1.97") / 50 mm (1.97")	F1
51 ... 100 mm (2.01 ... 3.94") / 100 mm (3.94")	F2
101 ... 150 mm (3.98 ... 5.91") / 150 mm (5.91")	F3
151 ... 200 mm (5.94 ... 7.87") / 200 mm (7.87")	F4
201 ... 250 mm (7.91 ... 9.84") / 250 mm (9.84")	F5
• Wetted parts materials: Stainless steel coated with PFA	
Range / Standard length	
20 ... 50 mm (0.79 ... 1.97") / 50 mm (1.97")	D1
51 ... 100 mm (2.01 ... 3.94") / 100 mm (3.94")	D2
101 ... 150 mm (3.98 ... 5.91") / 150 mm (5.91")	D3
151 ... 200 mm (5.94 ... 7.87") / 200 mm (7.87")	D4
201 ... 250 mm (7.91 ... 9.84") / 250 mm (9.84")	D5
• Wetted parts materials: Monel 400	
Range / Standard length	
20 ... 50 mm (0.79 ... 1.97") / 50 mm (1.97")	G1
51 ... 100 mm (2.01 ... 3.94") / 100 mm (3.94")	G2
101 ... 150 mm (3.98 ... 5.91") / 150 mm (5.91")	G3
151 ... 200 mm (5.94 ... 7.87") / 200 mm (7.87")	G4
• Wetted parts materials: Hastelloy C276	
Range / Standard length	
20 ... 50 mm (0.79 ... 1.97") / 50 mm (1.97")	J1
51 ... 100 mm (2.01 ... 3.94") / 100 mm (3.94")	J2
101 ... 150 mm (3.98 ... 5.91") / 150 mm (5.91")	J3
151 ... 200 mm (5.94 ... 7.87") / 200 mm (7.87")	J4
• Wetted parts materials: Tantalum	
Range / Standard length	
20 ... 50 mm (0.79 ... 1.97") / 50 mm (1.97")	K1
51 ... 100 mm (2.01 ... 3.94") / 100 mm (3.94")	K2
101 ... 150 mm (3.98 ... 5.91") / 150 mm (5.91")	K3
151 ... 200 mm (5.94 ... 7.87") / 200 mm (7.87")	K4

Selection and Ordering data	Article No. Ord. code
Diaphragm seal	
Flange design, with flexible capillary, connected to a pressure transmitter SITRANS P (order separately):	
for pressure 7MF2033-...; 7MF403.-... and 7MF423.-... (absolute pressure (gauge pressure series) together with Order code "V01" (Negative pressure service) and 7MF802.-...[1]; scope of delivery: 1 off	7MF4920-
for absolute pressure (differential pressure series 7MF433.-...; scope of delivery: 1 off	7MF4921-
for differential pressure and flow 7MF243.-...; 7MF443.-... and 7MF54..-...; scope of delivery: 2 off	7MF4923-
	1 ■■■■ - ■B ■■■
Filling liquid	
• Silicone oil M5	1
• Silicone oil M50	2
• High-temperature oil	3
• Halocarbon oil (for measuring O_2)[4]	4
• Food oil (FDA listed)	7
Other version Add Order code and plain text: Filling liquid: ...	9 M1Y
Length of capillary[5]	
• 1.0 m (3.28 ft)	2
• 1.6 m (5.25 ft)	3
• 2.5 m (8.20 ft)	4
• 4.0 m (13.1 ft)	5
• 6.0 m (19.7 ft)	6
• 8.0 m (26.25 ft)	7
• 10.0 m (32.8 ft)	8
Special lengths for capillaries	
• 2.0 m (6.56 ft)	9 N1C
• 3.0 m (9.84 ft)	9 N1E
• 5.0 m (16.40 ft)	9 N1G
• 7.0 m (23.97 ft)	9 N1J
• 9.0 m (29.53 ft)	9 N1L
only for 7MF4923-...	
• 11.0 m (36.09 ft)	9 N1N
• 12.0 m (39.37 ft)	9 N1P
• 13.0 m (42.65 ft)	9 N1Q
• 14.0 m (45.93 ft)	9 N1R
• 15.0 m (49.21 ft)	9 N1S

1) With 7MF802.-... and the measuring cells Q, S, T and U also order the negative pressure service.
2) For vacuum on request.
3) Only for use in non-hazardous atmospheres.
4) Oil- and grease- free cleaning to DIN 25410, level 2 and packaging included in the scope of delivery. Refer to "Further designs" C10 and E10.
5) Max. capillary length, see section "Technical description".

© Siemens 2020

Selection and Ordering data	Order code
Further designs Please add "**-Z**" to Article No. and specify Order code.	
Customer-specific tubus length Select range, enter desired length in plain text (No entry = standard length)	**Y44**
Spark arrestor With spark arrestor for mounting on zone 0 (including documentation) for transmitters for	
• pressure and absolute pressure	**A01**
• differential pressure	**A02**
Remote seal nameplate Attached out of stainless steel, contains MLFB and order number of the remote seal	**B20**
Oil- and grease-free cleaned version Oil- and grease-free cleaned and packed version, not for oxygen application, only in conjunction with halocarbon oil fill fluid, certified by certificate acc. to EN 10204-2.2	**C10**
Quality Inspection Certificate (5-point characteristic curve test) according to IEC 60770-2	**C11**
Inspection certificate to EN 10204, section 3.1	**C12**
2.2 Certificate of FDA approval of fill oil Only in conjunction with "Food-grade oil" fill liquid (FDA listed)"	**C17**
Functional safety certificate ("SIL 2") to IEC 61508 (Only in conjunction with the Order code "C20" in the case of SITRANS P DSIII transmitter)	**C20**
Functional safety certificate ("SIL 2/3") to IEC 61508 (Only in conjunction with the Order code "C23" in the case of SITRANS P DSIII transmitter)	**C23**
Certification acc. to NACE MR-0175 Includes inspection certificate 3.1 according to EN 10204 (only for wetted parts made of stainless steel 1.4404/316L and Hastelloy C276)	**D07**
Certification acc. to NACE MR-0103 Includes inspection certificate 3.1 according to EN 10204 (only for wetted parts made of stainless steel 1.4404/316L and Hastelloy C276)	**D08**
Oil- and grease-free cleaned version Oil- and grease-free cleaned and packed version, only for oxygen application, only inert fill fluid may be used. Max. temperature: 60 °C (140 °F), max. pressure 50 bar (725 psi), only in connection with halocarbon oil, certified by certificate acc. to EN 10204-2.2	**E10**
Epoxy painting (not possible with negative pressure service and not for 7MF4921-...) Color: transparent, coverage: front and rear of the remote seal, capillary(ies) or connecting tube, process connection of the transmitter. With transmitters 7MF40.. and 7MF42.., only possible with process connection G½B according to EN 837-1.	**E15**
One-sided mounting on differential pressure transmitters (only for 7MF4920-...)	
on high-pressure side	**H10**
on low-pressure side	**H11**

Selection and Ordering data	Order code
Further designs Please add "**-Z**" to Article No. and specify Order code.	
Sealing surface smooth, form B2 or RFSF (Stainless steel diaphragm) previously DIN 2501, form E	**J11**
Sealing surface groove, EN 1092-1, form D instead of sealing surface B1 (only for wetted parts made of stainless steel 316L)	**J14**
Sealing surface with spring according to EN 1092-1, form C, (previously DIN 2512, form F) in stainless steel 316L	
DN 25	**J30**
DN 40	**J31**
DN 50	**J32**
DN 80	**J33**
DN 100	**J34**
DN 125	**J35**
Sealing surface with male face according to EN 1092-1, form E (previously DIN 2512, form V13) in stainless steel 316L	
DN 25	**J40**
DN 40	**J41**
DN 50	**J42**
DN 80	**J43**
DN 100	**J44**
DN 125	**J45**
Sealing surface with female face according to EN 1092-1, form F (previously DIN 2512, form R13) in stainless steel 316L	
DN 25	**J50**
DN 40	**J51**
DN 50	**J52**
DN 80	**J53**
DN 100	**J54**
DN 125	**J55**
Sealing surface B1 or ASME B16.5 RF 125 ... 250 AA instead of sealing surface B2 or RFSF (only for wetted parts made of Hastelloy C276 (2.4819), tantalum and Duplex 2205 (1.4462) and for nominal sizes 2", 3", DN 50 and DN 80)	**J12**
Sealing surface RJF (groove, previously RTJ) ASME B16.5 instead of sealing surface ASME B16.5 RF 125 ... 250 AA (only for wetted parts made of stainless steel 316L)	**J24**

© Siemens 2020

Diaphragm seals of flange design with flexible capillary

Selection and Ordering data	Order code
Further designs Please add "**-Z**" to Article No. and specify Order code.	
Radial capillary pipe outlet	
for one-sided mounting	**K01**
for two-sided mounting	**K03**
PE protective tube over the spiral protective tube of the capillaries (color: white)	
1.0 m (3.28 ft)	**N20**
1.6 m (5.25 ft)	**N21**
2.0 m (6.56 ft)	**N22**
2.5 m (8.20 ft)	**N23**
3.0 m (9.84 ft)	**N24**
4.0 m (13.12 ft)	**N25**
5.0 m (16.40 ft)	**N26**
6.0 m (19.69 ft)	**N27**
7.0 m (22.97 ft)	**N28**
8.0 m (26.25 ft)	**N29**
9.0 m (29.53 ft)	**N30**
10.0 m (32.81 ft)	**N31**
only for 7MF4923-...	
11.0 m (36.09 ft)	**N32**
12.0 m (39.37 ft)	**N33**
13.0 m (42.65 ft)	**N34**
14.0 m (45.93 ft)	**N35**
15.0 m (49.21 ft)	**N36**
PTFE protective tube over the spiral protective tube of the capillaries (color: transparent)	
1.0 m (3.28 ft)	**N40**
1.6 m (5.25 ft)	**N41**
2.0 m (6.56 ft)	**N42**
2.5 m (8.20 ft)	**N43**
3.0 m (9.84 ft)	**N44**
4.0 m (13.12 ft)	**N45**
5.0 m (16.40 ft)	**N46**
6.0 m (19.69 ft)	**N47**
7.0 m (22.97 ft)	**N48**
8.0 m (26.25 ft)	**N49**
9.0 m (29.53 ft)	**N50**
10.0 m (32.81 ft)	**N51**
only for 7MF4923-...	
11.0 m (36.09 ft)	**N52**
12.0 m (39.37 ft)	**N53**
13.0 m (42.65 ft)	**N54**
14.0 m (45.93 ft)	**N55**
15.0 m (49.21 ft)	**N56**

Selection and Ordering data	Order code
PVC protective tube over the spiral protective tube of the capillaries (color: black)	
1.0 m (3.28 ft)	**N60**
1.6 m (5.25 ft)	**N61**
2.0 m (6.56 ft)	**N62**
2.5 m (8.20 ft)	**N63**
3.0 m (9.84 ft)	**N64**
4.0 m (13.12 ft)	**N65**
5.0 m (16.40 ft)	**N66**
6.0 m (19.69 ft)	**N67**
7.0 m (22.97 ft)	**N68**
8.0 m (26.25 ft)	**N69**
9.0 m (29.53 ft)	**N70**
10.0 m (32.81 ft)	**N71**
only for 7MF4923-...	
11.0 m (36.09 ft)	**N72**
12.0 m (39.37 ft)	**N73**
13.0 m (42.65 ft)	**N74**
14.0 m (45.93 ft)	**N75**
15.0 m (49.21 ft)	**N76**
Negative pressure service for use in low-pressure range for transmitters for	
• gauge and absolute pressure from the pressure series	**V01**
• differential pressure	**V03**
Extended negative pressure service for use in low-pressure range for transmitters for	
• gauge and absolute pressure from the pressure series	**V51**
• differential pressure	**V53**

© Siemens 2020

Dimensional drawings

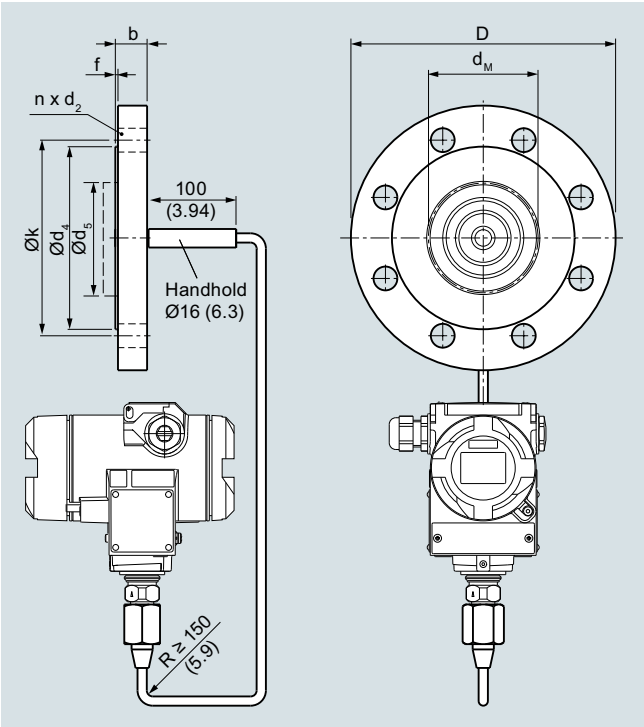

Diaphragm seals of flange design with flexible capillary for connection to SITRANS P pressure transmitters for pressure, dimensions in mm (inch)

Connection to EN 1092-1

Nom. diam.	Nom. press.	b mm	D mm	d_2 mm	d_4 mm	d_5 mm	d_M mm	f mm	k mm	n
DN 50	PN 10/1 6/ 25/40	20	165	18	102	48.3	45[1)]	2	125	4
	PN 100	28	195	26	102	48.3	45[1)]	2	145	4
DN 80	PN 10/1	24	200	18	138	76	72[2)]	2	160	8
	PN 100	32	230	26	138	76	72[2)]	2	180	8
DN 100	PN 10/1	20	220	18	158	94	89	2	180	8
	PN 25/4	24	235	22	162	94	89	2	190	8
DN 125	PN 16	22	250	18	188	125	124	2	210	8
	PN 40	26	270	26	188	125	124	2	220	8

Connection to ASME B16.5

Nom. diam.	Nom. press. lb/ sq.in.	b mm (inch	D mm (inch)	d_2 mm (inch	d_4 mm (inch	d_5 mm (inch	d_M mm (inch	f mm (inch	k mm (inch	n
2 inch	150	19.5	150	20	92	48.3	45[1)]	2	120.5	4
		(0.77)	(5.80)	(0.79)	(3.62)	(1.9)	(1.77)	(0.08)	(4.74)	
	300	22.7	165	20	92	48.3	45[1)]	2	127	8
		(0.89)	(6.50)	(0.79)	(3.62)	(1.9)	(1.77)	(0.08)	(5)	
	400/ 600	32.4	165	20	92	48.3	45[1)]	2	127	8
		(1.28)	(6.50)	(0.79)	(3.62)	(1.9)	(1.77)	(0.08)	(5)	
	900/ 1500	45.1	215	26	92	48.3	45[1)]	7	165	8
		(1.78)	(8.46)	(1.02)	(3.62)	(1.9)	(1.77)	(0.28)	(6.5)	
3 inch	150	24.3	190	20	127	76	72[2)]	2	152.5	4
		(0.96)	(7.48)	(0.79)	(5)	(3)	(2.83)	(0.08)	(6)	
	300	29	210	22	127	76	72[2)]	2	168.5	8
		(1.14)	(8.27)	(0.87)	(5)	(3)	(2.83)	(0.08)	(6.63)	
	600	38.8	210	22	127	76	72[2)]	7	168.5	8
		(1.53)	(8.27)	(0.87)	(5)	(3)	(2.83)	(0.28)	(6.63)	
4 inch	150	24.3	230	20	158	94	89	2	190.5	8
		(0.96)	(9.06)	(0.79)	(6.22)	(3.69)	(3.50)	(0.08)	(7.5)	
	300	32.2	255	22	158	94	89	2	200	8
		(1.27)	(10.04	(0.87)	(6.22)	(3.69)	(3.50)	(0.08)	(7.87)	
	400	42	255	26	158	94	89	7	200	8
		(1.65)	(10.04	(1.02)	(6.22)	(3.69)	(3.50)	(0.28)	(7.87)	
5 inch	150	24.3	255	22	186	125	124	2	216	8
		(0.96)	(10.04	(0.87)	(7.32)	(4.92)	(4.88)	(0.08)	(8.50)	
	300	35.8	280	22	186	125	124	2	235	8
		(1.41)	(11.02	(0.87)	(7.32)	(4.92)	(4.88)	(0.08)	(9.25)	
	400	45.1	280	26	186	125	124	7	235	8
		(1.79)	(11.02	(1.02)	(7.32)	(4.92)	(4.88)	(0.28)	(9.25)	

d: Inside diameter of gasket according to EN 1092-1 / ASME B16.5
d_M: Effective diaphragm diameter

1) 59 mm = 2.32 inch with tube length L = 0

2) 89 mm = 3½ inch with tube length L = 0

© Siemens 2020

Diaphragm seals of flange design with flexible capillary

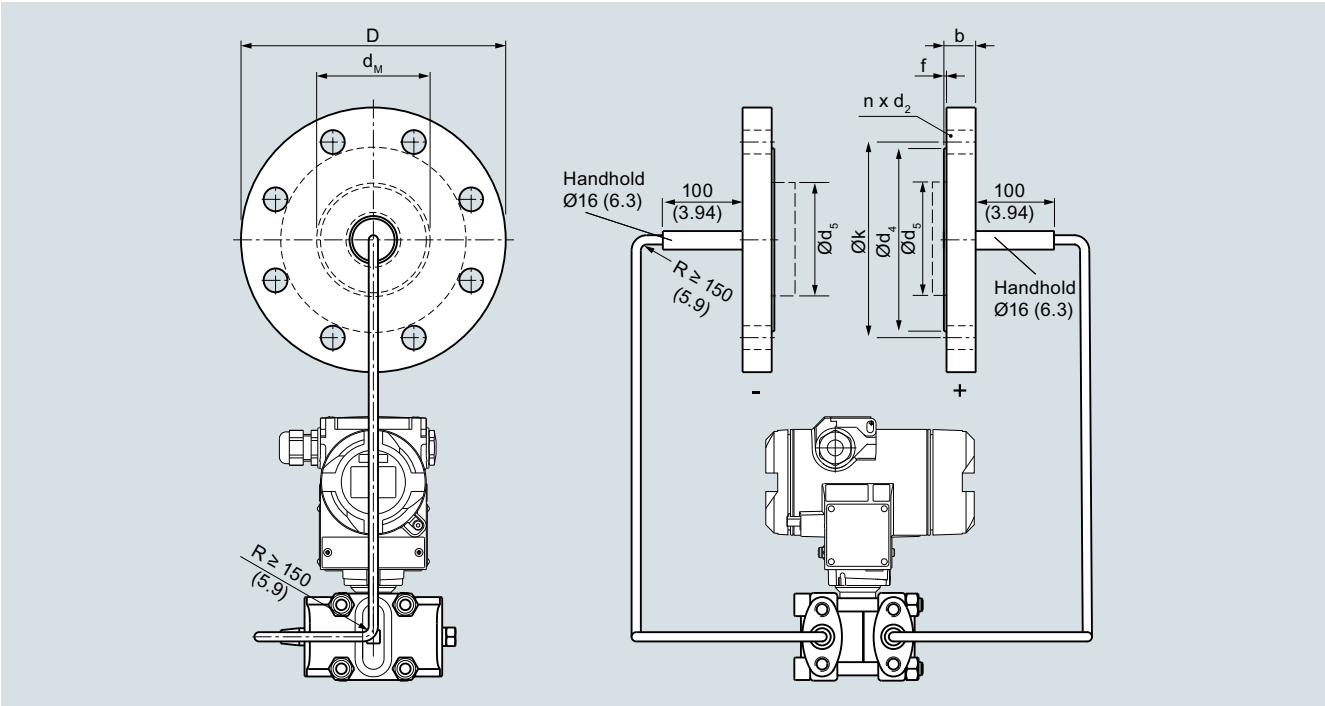

Diaphragm seals of flange design with flexible capillary for connection to SITRANS P pressure transmitters for absolute pressure or for differential pressure and flow, dimensions in mm (inch)

Connection to EN 1092-1

Nom. diam.	Nom. press.	b mm	D mm	d_2 mm	d_4 mm	d_5 mm	d_M mm	f mm	k mm	n
DN 80	PN 10/16	24	200	18	138	76	72[1)]	2	160	8
	PN 100	32	230	26	138	76	72[1)]	2	180	8
DN 100	PN 10/16	20	220	18	158	94	89	2	180	8
	PN 25/40	24	235	22	162	94	89	2	190	8
DN 125	PN 16	22	250	18	188	125	124	2	210	8
	PN 40	26	270	26	188	125	124	2	220	8

Connection to ASME B16.5

Nom. diam.	Nom. press. lb/ sq.in.	b mm (inch	D mm (inch)	d_2 mm (inch	d_4 mm (inch	d_5 mm (inch	d_M mm (inch	f mm (inch	k mm (inch	n
3 inch	150	24.3	190	20	127	76	72[1)]	2	152.5	4
		(0.96)	(7.48)	(0.79)	(5)	(3)	(2.83)	(0.08)	(6)	
	300	29	210	22	127	76	72[1)]	2	168.5	8
		(1.14)	(8.27)	(0.87)	(5)	(3)	(2.83)	(0.08)	(6.63)	
	600	38.8	210	22	127	76	72[1)]	7	168.5	8
		(1.52)	(8.27)	(0.87)	(5)	(3)	(2.83)	(0.28)	(6.63)	
4 inch	150	24.3	230	20	158	94	89	2	190.5	8
		(0.96)	(9.06)	(0.79)	(6.22)	(3.69)	(3.50)	(0.08)	(7.5)	
	300	32.2	255	22	158	94	89	2	200	8
		(1.27)	(10.04)	(0.87)	(6.22)	(3.69)	(3.50)	(0.08)	(7.87)	
	400	42	255	26	158	94	89	7	200	8
		(1.65)	(10.04)	(1.02)	(6.22)	(3.69)	(3.50)	(0.28)	(7.87)	
5 inch	150	24.3	255	22	186	125	124	2	216	8
		(0.96)	(10.04)	(0.87)	(7.32)	(4.92)	(4.88)	(0.08)	(8.50)	
	300	35.8	280	22	186	125	124	2	235	8
		(1.41)	(11.02)	(0.87)	(7.32)	(4.92)	(4.88)	(0.08)	(9.25)	
	400	45.1	280	26	186	125	124	7	235	8
		(1.79)	(11.02)	(1.02)	(7.32)	(4.92)	(4.88)	(0.28)	(9.25)	

d: Inside diameter of gasket according to EN 1092-1 / ASME B16.5
d_M: Effective diaphragm diameter
[1)] 89 mm = 3½ inch with tube length L = 0

© Siemens 2020

Overview

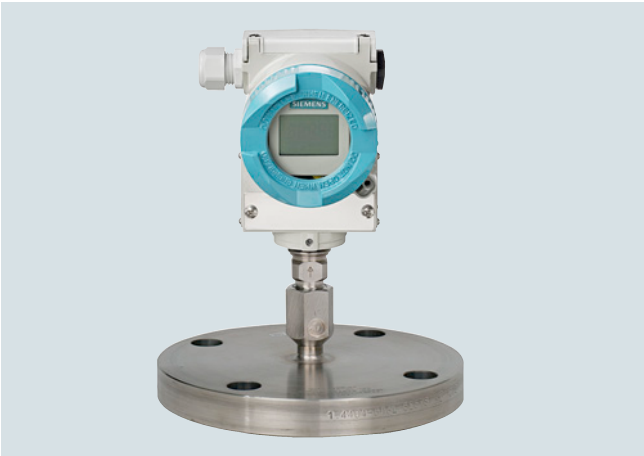

Diaphragm seals of flange design, directly fitted on a pressure transmitter for pressure

Technical specifications

Diaphragm seals (flange design) for pressure and absolute pressure, directly fitted on a transmitter	
Nominal diameter	Nominal pressure
• DN 50	PN 10/16/25/40, PN 100
• DN 80	PN 10/16/25/40, PN 100
• DN 100	PN 10/16, PN 25/40
• 2 inch	Class 150, class 300, class 400/600, class 900/1500
• 3 inch	Class 150, class 300, class 600
• 4 inch	Class 150, class 300, class 400
Sealing surface	
• For stainless steel, mat. No. 1.4404/316L	To EN 1092-1, form B1 or ASME B16.5 RF 125 ... 250 AA
• For the other materials	Smooth to EN 1092-1, form B2 or ASME B16.5 RFSF
Materials	
• Main body	Stainless steel mat. no. 1.4404/316L
• Wetted parts	Stainless steel mat. no. 1.4404/316L
	• Without coating
	• PTFE coating
	• ECTFE coating (for vacuum on request)
	• PFA coating
	Monel 400, mat. No. 2.4360
	Hastelloy C276, mat. No. 2.4819
	Hastelloy C4, mat. No. 2.4602
	Hastelloy C22, mat No. 2.4602
	Tantalum
	Titanium, mat. No. 3.7035
	Nickel 201
	Duplex 2205, mat. no. 1.4462
	Stainless steel 316L, gold plated, thickness approx. 25 µm
• Capillary	Stainless steel, mat. No. 1.4404/316L
• Sealing material at the transmitter connection	Copper

Maximum pressure	See above and the technical data of the transmitter
Tube length	• Without tube
	• 50 mm (1.97 inch)
	• 100 mm (3.94 inch)
	• 150 mm (5.91 inch)
	• 200 mm (7.87 inch)
Capillary	
• Length	Max. 10 m (32.8 ft), longer lengths on request
• Internal diameter	2 mm (0.079 inch)
• Minimum bending radius	150 mm (5.9 inch)
Filling liquid	• Silicone oil M5
	• Silicone oil M50
	• High-temperature oil
	• Halocarbon oil (for measuring O_2)
	• Food oil (FDA listed)
Max. recommended temperature of medium	170 °C (338 °F)
Permissible ambient temperature	Dependent on the pressure transmitter and the filling liquid of the remote seal.
	More information can be found in the technical data of the pressure transmitters and in the section "Technical data of filling liquid" in the Technical description to the remote seals.
Weight	Approx. 4 kg (8.82 lb)
Certificate and approvals	
Classification according to pressure equipment directive (DGRL 2014/68/EU)	For gases of fluid group 1 and liquids of fluid group 1; complies with requirements of article 4, paragraph 3 (sound engineering practice)

© Siemens 2020

Diaphragm seals of flange design mounted directly on transmitter

Selection and Ordering data		Article No. Ord. code
Diaphragm seal ↗		7MF4910-
Directly fitted to a pressure transmitter SITRANS P for pressure 7MF2033-...; 7MF403.-... and 7MF423.-... together with Order code "V01" (Negative pressure service) and 7MF802.-...[1]; must be ordered separately		
↗ Click on the Article No. for the online configuration in the PIA Life Cycle Portal.		
Process connection		
• Vertical (pressure transmitter upright)		0
• Horizontal		2
Nominal diameter and nominal pressure		
DN 25	PN 10/16/25/40	Z J0A
	PN 63/100/160	Z J0B
DN 40	PN 10/16/25/40	Z J0C
	PN 63/100	Z J0D
	PN 160	Z J0E
• DN 50	PN 10/16/25/40	A
	PN 100	B
• DN 80	PN 10/16/25/40	D
	PN 100	E
• DN 100	PN 10/16	G
	PN 25/40	H
1 inch	class 150	Z J6A
	class 300	Z J6B
	class 400/600	Z J6C
	class 900/1500	Z J6D
1½ inch	class 150	Z J6E
	class 300	Z J6F
	class 400/600	Z J6G
	class 900/1500	Z J6H
• 2 inch	Class 150	L
	Class 300	M
	Class 400/600	N
	Class 900/1500	P
• 3 inch	Class 150	Q
	Class 300	R
	Class 600	S
• 4 inch	Class 150	T
	Class 300	U
	Class 400	V
JIS DN 50	10 K 316L	Z J7A
	20 K 316L	Z J7B
JIS DN 80	10 K 316L	Z J7C
	20 K 316L	Z J7D
Smooth sealing surface to DIN 1092-01, form B1 or B2, or to ASME B16.5 125 ... 250 AA or RFSF		
Other version Add Order code and plain text: Nominal diameter: ...; Nominal pressure: ...		Z J1Y

Selection and Ordering data	Article No. Ord. code
Diaphragm seal	7MF4910-
Directly fitted to a pressure transmitter SITRANS P for pressure 7MF2033-...; 7MF403.-... and 7MF423.-... together with Order code "V01" (Negative pressure service) and 7MF802.-...[1]; must be ordered separately	
Wetted parts materials	
• Stainless steel 316L	
- without coating	A
- with PTFE coating	E0
- with ECTFE coating[2) 3)]	F
- with PFA coating [3)]	D
• Monel 400, mat. No. 2.4360	G
• Hastelloy C276, mat. No. 2.4819	J
• Hastelloy C4, mat. No. 2.4602	U
• Hastelloy C22, mat. No. 2.4602	V0
• Tantalum	K
• Titanium, mat. No. (max. 150 °C (302 °F))	L0
• Nickel 201 (max. 260 °C (500 °F))	M0
• Duplex 2205, W.-Nr. 1.4462	Q
• Stainless steel 316L, gold plated, thickness approx. 25 µm	S0
Tube length	
• Without tube	0
Other version: Add Order code and plain text: Wetted parts materials: ..., Tube length: ...	Z8 K1Y

© Siemens 2020

Selection and Ordering data		Article No. Ord. code
Diaphragm seal		**7MF4910-**
Directly fitted to a pressure transmitter SITRANS P for pressure 7MF2033-...; 7MF403.-... and 7MF423.-... together with Order code "V01" (Negative pressure service) and 7MF802.-...[1]; must be ordered separately		■■■■■ ■■■
Customer-specific tubus length		
Specify customer-specific length with Y44, see Order Code		
• Wetted parts materials: Stainless steel without foil		
Range	Standard length	
20 ... 50 mm (0.79 ... 1.97")	50 mm (1.97")	**A 1**
51 ... 100 mm (2.01 ... 3.94")	100 mm (3.94")	**A 2**
101 ... 150 mm (3.98 ... 5.91")	150 mm (5.91")	**A 3**
151 ... 200 mm (5.94 ... 7.87")	200 mm (7.87")	**A 4**
201 ... 250 mm (7.91 ... 9.84")	250 mm (9.84")	**A 5**
• Wetted parts materials: Stainless steel coated with ECTFE		
Range	Standard length	
20 ... 50 mm (0.79 ... 1.97")	50 mm (1.97")	**F 1**
51 ... 100 mm (2.01 ... 3.94")	100 mm (3.94")	**F 2**
101 ... 150 mm (3.98 ... 5.91")	150 mm (5.91")	**F 3**
151 ... 200 mm (5.94 ... 7.87")	200 mm (7.87")	**F 4**
201 ... 250 mm (7.91 ... 9.84")	250 mm (9.84")	**F 5**
• Wetted parts materials: Stainless steel coated with PFA		
Range	Standard length	
20 ... 50 mm (0.79 ... 1.97")	50 mm (1.97")	**D 1**
51 ... 100 mm (2.01 ... 3.94")	100 mm (3.94")	**D 2**
101 ... 150 mm (3.98 ... 5.91")	150 mm (5.91")	**D 3**
151 ... 200 mm (5.94 ... 7.87")	200 mm (7.87")	**D 4**
201 ... 250 mm (7.91 ... 9.84")	250 mm (9.84")	**D 5**
• Wetted parts materials: Monel 400		
Range	Standard length	
20 ... 50 mm (0.79 ... 1.97")	50 mm (1.97")	**G 1**
51 ... 100 mm (2.01 ... 3.94")	100 mm (3.94")	**G 2**
101 ... 150 mm (3.98 ... 5.91")	150 mm (5.91")	**G 3**
151 ... 200 mm (5.94 ... 7.87")	200 mm (7.87")	**G 4**
• Wetted parts materials: Hastelloy C276		
Range	Standard length	
20 ... 50 mm (0.79 ... 1.97")	50 mm (1.97")	**J 1**
51 ... 100 mm (2.01 ... 3.94")	100 mm (3.94")	**J 2**
101 ... 150 mm (3.98 ... 5.91")	150 mm (5.91")	**J 3**
151 ... 200 mm (5.94 ... 7.87")	200 mm (7.87")	**J 4**
• Wetted parts materials: Tantalum		
Range	Standard length	
20 ... 50 mm (0.79 ... 1.97")	50 mm (1.97")	**K 1**
51 ... 100 mm (2.01 ... 3.94")	100 mm (3.94")	**K 2**
101 ... 150 mm (3.98 ... 5.91")	150 mm (5.91")	**K 3**
151 ... 200 mm (5.94 ... 7.87")	200 mm (7.87")	**K 4**
Filling liquid		
• Silicone oil M5		**1**
• Silicone oil M50		**2**
• High-temperature oil		**3**
• Halocarbon oil (for measuring O_2)[4]		**4**
• Food oil (FDA listed)		**7**
Other version Add Order code and plain text: Filling liquid: ...		**9** **M 1 Y**

[1] With 7MF802.-... and the measuring cells Q, S, T and U also order negative pressure service.
[2] For vacuum on request.
[3] Only for use in non-hazardous atmospheres.
[4] Oil- and grease- free cleaning to DIN 25410, level 2 and packaging included in the scope of delivery. Refer to "Further designs" C10 and E10.

Selection and Ordering data	Order code
Further designs	
Please add "**-Z**" to Article No. and specify Order code.	
Customer-specific tubus length	**Y44**
Select range, enter desired length in plain text (No entry = standard length)	
Spark arrestor	**A01**
With spark arrestor for mounting on zone 0 (including documentation) for transmitters for gauge pressure and absolute pressure	
Remote seal nameplate	**B20**
Attached out of stainless steel, contains MLFB and order number of the remote seal	
Oil- and grease-free cleaned version	**C10**
Oil- and grease-free cleaned and packed version, not for oxygen application, only in conjunction with halocarbon oil fill fluid, certified by certificate acc. to EN 10204-2.2	
Quality Inspection Certificate (5-point characteristic curve test) according to IEC 60770-2	**C11**
Inspection certificate	**C12**
to EN 10204, section 3.1	
2.2 Certificate of FDA approval of fill oil	**C17**
Only in conjunction with "Food-grade oil" fill liquid (FDA listed)"	
Functional safety certificate ("SIL 2") to IEC 61508	**C20**
(Only in conjunction with the Order code "C20" in the case of SITRANS P DSIII transmitter)	
Functional safety certificate ("SIL 2/3") to IEC 61508	**C23**
(Only in conjunction with the Order code "C23" in the case of SITRANS P DSIII transmitter)	
Certification acc. to NACE MR-0175	**D07**
Includes inspection certificate 3.1 according to EN 10204 (only for wetted parts made of stainless steel 1.4404/316L and Hastelloy C276)	
Certification acc. to NACE MR-0103	**D08**
Includes inspection certificate 3.1 according to EN 10204 (only for wetted parts made of stainless steel 1.4404/316L and Hastelloy C276)	
Oil- and grease-free cleaned version	**E10**
Oil- and grease-free cleaned and packed version, only for oxygen application, only inert fill fluid may be used. Max. temperature: 60 °C (140 °F), max. pressure 50 bar (725 psi), only in connection with halocarbon oil, certified by certificate acc. to EN 10204-2.2	
Epoxy painting	**E15**
Not possible with negative pressure service	
Color: transparent, coverage: front and rear of the remote seal, capillary(ies) or connecting tube, process connection of the transmitter. With transmitters 7MF40.. and 7MF42.., only possible with process connection G½B according to EN 837-1.	

© Siemens 2020

Diaphragm seals of flange design mounted directly on transmitter

Selection and Ordering data	Order code
Further designs	
Please add "**-Z**" to Article No. and specify Order code.	
Sealing surface smooth, form B2 or RFSF (Stainless steel diaphragm)	**J11**
previously DIN 2501, form E	
Sealing surface groove, EN 1092-1, form D	**J14**
instead of sealing surface B1 (only for wetted parts made of stainless steel 316L)	
Sealing surface with spring according to EN 1092-1, form C, (previously DIN 2512, form F) in stainless steel 316L	
DN 25	**J30**
DN 40	**J31**
DN 50	**J32**
DN 80	**J33**
DN 100	**J34**
DN 125	**J35**
Sealing surface with male face according to EN 1092-1, form E (previously DIN 2512, form V13) in stainless steel 316L	
DN 25	**J40**
DN 40	**J41**
DN 50	**J42**
DN 80	**J43**
DN 100	**J44**
DN 125	**J45**
Sealing surface with female face according to EN 1092-1, form F (previously DIN 2512, form R13) in stainless steel 316L	
DN 25	**J50**
DN 40	**J51**
DN 50	**J52**
DN 80	**J53**
DN 100	**J54**
DN 125	**J55**
Sealing surface B1 or ASME B16.5 RF 125 ... 250 AA	**J12**
Instead of sealing surface B2 and RFSF (Only for wetted parts in Hastelloy C276 (2.4819), Tantal and Duplex 2205 (1.4462) and for sizes 2", 3", DN 50 and DN 80)	
Sealing surface RJF (groove, previously RTJ) ASME B16.5	**J24**
instead of sealing surface ASME B16.5 RF 125 ... 250 AA (only for wetted parts made of stainless steel 316L)	

Selection and Ordering data	Order code
Further designs	
Please add "**-Z**" to Article No. and specify Order code.	
Elongated pipe 200 mm instead of 89 mm, max. medium temperature 300 °C, observe the maximum permissible media temperature of the filling liquid.	**R20**
Elongated pipe elbow 200 mm instead of 130 mm, max. medium temperature 300 °C, observe the maximum permissible media temperature of the filling liquid.	**R21**
Cooling element max. medium temperature 300 °C, observe the maximum permissible media temperature of the filling liquid.	**R22**
Negative pressure service	
for use in low-pressure range for transmitters for • gauge and absolute pressure from the pressure series	**V01**
Extended negative pressure service	
for use in low-pressure range for transmitters for • gauge and absolute pressure from the pressure series	**V51**

© Siemens 2020

Dimensional drawings

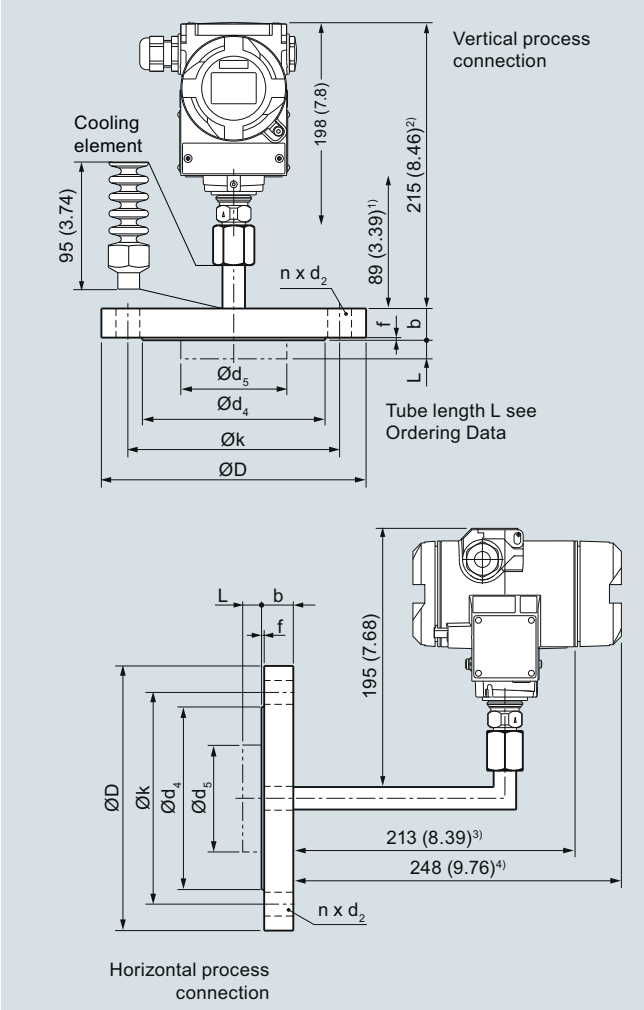

1) 200 (7.9) with option R20, 278 (11.0) with cooling element opt. R22)
2) 324 (12.8) with option R20, 326 (12.9) with cooling element opt. R22)
3) 283 (11.14) with option R21
4) 318 (12.52) with option R21

Diaphragm seals of flange design, direct connection to a SITRANS P pressure transmitter (process connection vertical (top) and horizontal (bottom)), dimensions in mm (inch)

Connection to EN 1092-1

Nom. diam.	Nominal pressure	b	D	d_2	d_4	d_5	d_M	f	k	n
		mm	mm	mm	mm	mm	mm	mm	mm	
DN 50	PN 10/16/ 25/40	20	165	18	102	48.3	45[1]	2	125	4
	PN 100	28	195	26	102	48.3	45[1]	2	145	4
DN 80	PN 10/16/ 25/40	24	200	18	138	76	72[1]	2	160	8
	PN 100	32	230	26	138	76	72[1]	2	180	8
DN 100	PN 10/16	20	220	18	158	94	89-2	2	180	8
	PN 25/40	24	235	22	162	94	89	2	190	8

Connection to ASME B16.5

Nom. diam.	Nom. press.	b	D	d_2	d_4	d_5	d_M	f	k	n
	lb/ sq.in.	mm (inch)	mm (inch)	mm (inch)	mm (inch)	mm (inch)	mm (inch)	mm (inch)	mm (inch)	
2 inch	150	19.5	150	20	92	48.3	45[1]	2	120.5	4
		(0.77)	(5.91)	(0.79)	(3.62)	(1.9)	(1.77)[1]	(0.08)	(4.74)	
	300	22.7	165	20	92	48.3	45[1]	2	127	8
		(0.89)	(6.5)	(0.79)	(3.62)	(1.9)	(1.77)[1]	(0.08)	(5)	
	400/ 600	32.4	165	20	92	48.3	45[1]	7	127	8
		(1.28)	(6.5)	(0.79)	(3.62)	(1.9)	(1.77)[1]	(0.28)	(5)	
	900/ 1500	45.1	215	26	92	48.3	45[1]	7	165	8
		(1.78)	(8.46)	(1.02)	(3.62)	(1.9)	(1.77)[1]	(0.28)	(6.5)	
3 inch	150	24.3	190	20	127	76	72[2]	2	152.5	4
		(0.96)	(7.48)	(0.79)	(5)	(3)	(2.83)[2]	(0.08)	(6)	
	300	29	210	22	127	76	72[2]	2	168.5	8
		(1.14)	(8.27)	(0.87)	(5)	(3)	(2.83)[2]	(0.08)	(6.63)	
	600	38.8	210	22	127	76	72[2]	7	168.5	8
		(1.53)	(8.27)	(0.87)	(5)	(3)	(2.83)[2]	(0.28)	(6.63)	
4 inch	150	24.3	230	20	158	94	89	2	190.5	8
		(0.96)	(9.06)	(0.79)	(6.22)	(3.69)	(3.50)	(0.08)	(7.5)	
	300	32.2	255	22	158	94	89	2	200	8
		(1.27)	(10.04)	(0.79)	(6.22)	(3.69)	(3.50)	(0.08)	(7.87)	
	400	42	255	26	158	94	89	7	200	8
		(1.65)	(10.04)	(1.02)	(6.22)	(3.69)	(3.50)	(0.28)	(7.87)	

d: Inside diameter of gasket according to EN 1092-1/ ASME B16.5

d_M: Effective diaphragm diameter

1) 59 mm = 2.32 inch with tube length L = 0

2) 89 mm = 3½ inch with tube length L = 0

© Siemens 2020

Overview

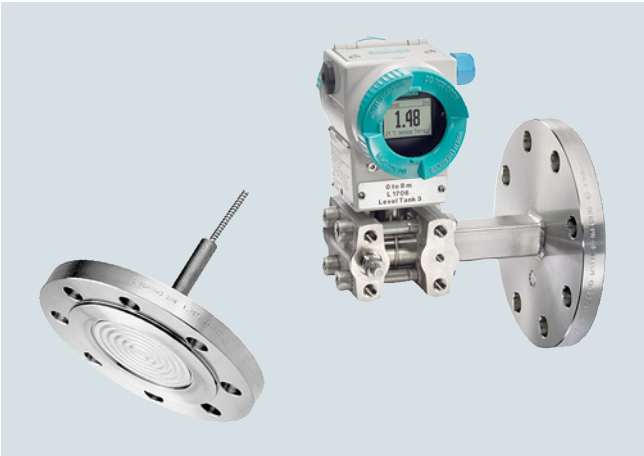

Diaphragm seals of screwed design for pressure transmitters for differential pressure, fixed connection and with flexible capillary

Technical specifications

Diaphragm seals of screwed design for pressure transmitters for differential pressure, fixed connection and with flexible capillary	
Nominal diameter	Nominal pressure
• DN 50	PN 10/16/25/40, PN 100
• DN 80	PN 10/16/25/40
• DN 100	PN 10/16, PN 25/40
• 2 inch	Class 150, class 300, class 400/600, class 900/1500
• 3 inch	Class 150, class 300
• 4 inch	Class 150, class 300
Sealing surface	
• For stainless steel, mat. No. 1.4404/316L	To EN 1092-1, form B1 or ASME B16.5 RF 125 ... 250 AA
• For the other materials	To EN 1092-1, form B2 or ASME B16.5 RFSF
Materials	
• Main body	Stainless steel mat. no. 1.4404/316L
• Wetted parts	Stainless steel mat. no. 1.4404/316L
	• Without coating
	• PTFE coating
	• ECTFE coating (for vacuum on request)
	• PFA coating
	Monel 400, mat. No. 2.4360
	Hastelloy C276, mat. No. 2.4819
	Hastelloy C4, mat. No. 2.4602
	Hastelloy C22, W.-Nr. 2.4602
	Tantalum
	Titanium, W.-Nr. 3.7035
	Nickel 201
	Duplex 2205, mat. no. 1.4462
	Stainless steel 316L, gold plated, thickness approx. 25 µm
• Capillary	Stainless steel, mat. No. 1.4571/316Ti
• Sheath	Spiral protective tube made of stainless steel, mat. No. 1.4404/316L

Sealing material in the process flanges	
• For pressure transmitters, absolute pressure transmitters and low-pressure applications	Copper
• For other applications	Viton
Maximum pressure	See above and the technical data of the pressure transmitter
Tube length	Without tube
	50 mm (1.97 inch)
	100 mm (3.94 inch)
	150 mm (5.91 inch)
	200 mm (7.87 inch)
Capillary	
• Length	Max. 10 m (32.8 ft), longer lengths on request
• Internal diameter	2 mm (0.079 inch)
• Minimum bending radius	150 mm (5.9 inch)
Filling liquid	Silicone oil M5
	Silicone oil M50
	High-temperature oil
	Halocarbon oil (for measuring O_2)
	Food oil (FDA listed)
Max. recommended temperature of medium	170 °C (338 °F)
Permissible ambient temperature	Dependent on the pressure transmitter and the filling liquid of the remote seal
	More information can be found in the technical data of the pressure transmitters and in the section "Technical data of filling liquid" in the Technical description to the remote seals
Weight	Approx. 4 kg (8.82 lb)
Certificate and approvals	
Classification according to pressure equipment directive (DGRL 2014/68/EU)	For gases of fluid group 1 and liquids of fluid group 1; complies with requirements of article 4, paragraph 3 (sound engineering practice)

© Siemens 2020

Selection and Ordering data		Article No. Ord. code
Diaphragm seal ↗		7MF4913-
Mounting flange (with tube as option) for direct mounting to high-pressure side **and flanged remote seal without tube**, fitted by means of capillary to low-pressure side of SITRANS P for differential pressure; SITRANS P DS III series and P410 (7MF443.-...) and SITRANS P500 (7MF54..-...)		1 ■■■■-■B ■■■
↗ Click on the Article No. for the online configuration in the PIA Life Cycle Portal.		
Flange, connection to EN 1092-1		
Nominal diameter and nominal pressure		
• DN 25	PN 10/16/25/40	Z J0A
	PN 63/100/160	Z J0B
• DN 40	PN 10/16/25/40	Z J0C
	PN 63/100	Z J0D
	PN 160	Z J0E
• DN 50	PN 10/16/25/40	A
	PN 100	B
• DN 80	PN 10/16/25/40	D
• DN 100	PN 10/16	G
	PN 25/40	H
Flange, connection to ASME B16.5		
Nominal diameter and nominal pressure		
• 1 inch	Class 150	Z J6A
	Class 300	Z J6B
	Class 400/600	Z J6C
	Class 900/1500	Z J6D
• 1½ inch	Class 150	Z J6E
	Class 300	Z J6F
	Class 400/600	Z J6G
	Class 900/1500	Z J6H
• 2 inch	Class 150	L
	Class 300	M
	Class 400/600	N
	Class 900/1500	P
• 3 inch	Class 150	Q
	Class 300	R
• 4 inch	Class 150	T
	Class 300	U
Flange acc. to JIS		
Nominal diameter and nominal pressure		
• JIS DN 50	10 K 316L	Z J7A
	20 K 316L	Z J7B
• JIS DN 80	10 K 316L	Z J7C
	20 K 316L	Z J7D
Other version Add Order code and plain text: Flange: ..., Nominal diameter: ...; Nominal pressure: ...		Z J1Y

Selection and Ordering data	Article No. Ord. code
Diaphragm seal	7MF4913-
Mounting flange (with tube as option) for direct mounting to high-pressure side **and flanged remote seal without tube**, fitted by means of capillary to low-pressure side of SITRANS P for differential pressure; SITRANS P DS III series and P410 (7MF443.-...) and SITRANS P500 (7MF54..-...)	1 ■■■■-■B ■■■
Wetted parts materials	
Smooth sealing surface to EN 1092-1, form B1 or B2, or to ASME B16.5 RF 125 ... 250 AA or RFSF	
• Stainless steel 316L	
- without coating	A
- with PTFE coating	E0
- with ECTFE coating[1) 2)]	F
- with PFA coating [2)]	D
• Monel 400, mat. No. 2.4360	G
• Hastelloy C276, mat. No. 2.4819	J
• Hastelloy C4, mat. No. 2.4602	U
• Hastelloy C22, mat. No. 2.4602	V0
• Tantalum	K
• Titanium, mat. No. 3.7035 (max. 150 °C (302 °F))	L0
• Nickel 201 (max. 260 °C (500 °F))	M0
• Duplex, mat. no. 1.4462	Q
• Duplex, mat. no. 1.4462, incl. main body	R
• Stainless steel 316L, gold plated, thickness approx. 25 µm	S0

© Siemens 2020

Diaphragm seals of flange design mounted directly and with capillary

Selection and Ordering data	Article No. Ord. code
Diaphragm seal	7MF4913-
Mounting flange (with tube as option) for direct mounting to high-pressure side **and flanged remote seal without tube**, fitted by means of capillary to low-pressure side of SITRANS P for differential pressure; SITRANS P DS III series and P410 (7MF443.-...) and SITRANS P500 (7MF54..-...)	1 ■■■■-■B ■■■
Tube length	
(for mounting flange on high-pressure side)	
• Without tube	0
Other version: Add Order code and plain text: Wetted parts materials: ....., Tube length: ...	Z 8 K 1 Y
Customer-specific tubus length	
Specify customer-specific length with Y44, see Order Code	
• Wetted parts materials: Stainless steel without foil	
Range / Standard length	
20 ... 50 mm (0.79 ... 1.97") / 50 mm (1.97")	A 1
51 ... 100 mm (2.01 ... 3.94") / 100 mm (3.94")	A 2
101 ... 150 mm (3.98 ... 5.91") / 150 mm (5.91")	A 3
151 ... 200 mm (5.94 ... 7.87") / 200 mm (7.87")	A 4
201 ... 250 mm (7.91 ... 9.84") / 250 mm (9.84")	A 5
• Wetted parts materials: Stainless steel coated with ECTFE	
Range / Standard length	
20 ... 50 mm (0.79 ... 1.97") / 50 mm (1.97")	F 1
51 ... 100 mm (2.01 ... 3.94") / 100 mm (3.94")	F 2
101 ... 150 mm (3.98 ... 5.91") / 150 mm (5.91")	F 3
151 ... 200 mm (5.94 ... 7.87") / 200 mm (7.87")	F 4
201 ... 250 mm (7.91 ... 9.84") / 250 mm (9.84")	F 5
• Wetted parts materials: Stainless steel coated with PFA	
Range / Standard length	
20 ... 50 mm (0.79 ... 1.97") / 50 mm (1.97")	D 1
51 ... 100 mm (2.01 ... 3.94") / 100 mm (3.94")	D 2
101 ... 150 mm (3.98 ... 5.91") / 150 mm (5.91")	D 3
151 ... 200 mm (5.94 ... 7.87") / 200 mm (7.87")	D 4
201 ... 250 mm (7.91 ... 9.84") / 250 mm (9.84")	D 5
• Wetted parts materials: Monel 400	
Range / Standard length	
20 ... 50 mm (0.79 ... 1.97") / 50 mm (1.97")	G 1
51 ... 100 mm (2.01 ... 3.94") / 100 mm (3.94")	G 2
101 ... 150 mm (3.98 ... 5.91") / 150 mm (5.91")	G 3
151 ... 200 mm (5.94 ... 7.87") / 200 mm (7.87")	G 4
• Wetted parts materials: Hastelloy C276	
Range / Standard length	
20 ... 50 mm (0.79 ... 1.97") / 50 mm (1.97")	J 1
51 ... 100 mm (2.01 ... 3.94") / 100 mm (3.94")	J 2
101 ... 150 mm (3.98 ... 5.91") / 150 mm (5.91")	J 3
151 ... 200 mm (5.94 ... 7.87") / 200 mm (7.87")	J 4
• Wetted parts materials: Tantalum	
Range / Standard length	
20 ... 50 mm (0.79 ... 1.97") / 50 mm (1.97")	K 1
51 ... 100 mm (2.01 ... 3.94") / 100 mm (3.94")	K 2
101 ... 150 mm (3.98 ... 5.91") / 150 mm (5.91")	K 3
151 ... 200 mm (5.94 ... 7.87") / 200 mm (7.87")	K 4

Selection and Ordering data	Article No. Ord. code
Diaphragm seal	7MF4913-
Mounting flange (with tube as option) for direct mounting to high-pressure side **and flanged remote seal without tube**, fitted by means of capillary to low-pressure side of SITRANS P for differential pressure; SITRANS P DS III series and P410 (7MF443.-...) and SITRANS P500 (7MF54..-...)	1 ■■■■-■B ■■■
Filling liquid	
• Silicone oil M5	1
• Silicone oil M50	2
• High-temperature oil	3
• Halocarbon oil (for measuring O_2)[3]	4
• Food oil (FDA listed)	7
Other version Add Order code and plain text: Filling liquid: ...	9 M 1 Y
Length of capillary[4]	
• 1.0 m (3.28 ft)	2
• 1.6 m (5.25 ft)	3
• 2.5 m (8.20 ft)	4
• 4.0 m (13.1 ft)	5
• 6.0 m (19.7 ft)	6
• 8.0 m (26.25 ft)	7
• 10.0 m (32.8 ft)	8
Special lengths for capillaries	
• 2.0 m (6.56 ft)	9 N 1 C
• 3.0 m (9.84 ft)	9 N 1 E
• 5.0 m (16.40 ft)	9 N 1 G
• 7.0 m (23.97 ft)	9 N 1 J
• 9.0 m (29.53 ft)	9 N 1 L

1) For vacuum on request.
2) Only for use in non-hazardous atmospheres.
3) Oil- and grease- free cleaning to DIN 25410, level 2 and packaging included in the scope of delivery. Refer to "Further designs" C10 and E10.
4) Max. capillary length, see section "Technical description".

© Siemens 2020

Selection and Ordering data	Order code
Further designs	
Please add "**-Z**" to Article No. and specify Order code.	
Customer-specific tubus length	**Y44**
Select range, enter desired length in plain text (No entry = standard length)	
Spark arrestor With spark arrestor for mounting on zone 0 (including documentation)	**A02**
Remote seal nameplate	**B20**
Attached out of stainless steel, contains MLFB and order number of the remote seal	
Oil- and grease-free cleaned version	**C10**
Oil- and grease-free cleaned and packed version, not for oxygen application, only in conjunction with halocarbon oil fill fluid, certified by certificate acc. to EN 10204-2.2	
Quality Inspection Certificate (5-point characteristic curve test) according to IEC 60770-2	**C11**
Inspection certificate	**C12**
to EN 10204, section 3.1	
2.2 Certificate of FDA approval of fill oil	**C17**
Only in conjunction with "Food-grade oil" fill liquid (FDA listed)"	
Functional safety certificate ("SIL 2") to IEC 61508	**C20**
(Only in conjunction with the Order code "C20" in the case of SITRANS P DSIII transmitter)	
Functional safety certificate ("SIL 2/3") to IEC 61508	**C23**
(Only in conjunction with the Order code "C23" in the case of SITRANS P DSIII transmitter)	
Certification acc. to NACE MR-0175	**D07**
Includes inspection certificate 3.1 according to EN 10204 (only for wetted parts made of stainless steel 1.4404/316L and Hastelloy C276)	
Certification acc. to NACE MR-0103	**D08**
Includes inspection certificate 3.1 according to EN 10204 (only for wetted parts made of stainless steel 1.4404/316L and Hastelloy C276)	
Oil- and grease-free cleaned version	**E10**
Oil- and grease-free cleaned and packed version, only for oxygen application, only inert fill fluid may be used. Max. temperature: 60 °C (140 °F), max. pressure 50 bar (725 psi), only in connection with halocarbon oil, certified by certificate acc. to EN 10204-2.2	
Epoxy painting	**E15**
Not possible with negative pressure service.	
Color: transparent, coverage: front and rear of the remote seal, capillary(ies) or connecting tube, process connection of the transmitter. With transmitters 7MF40.. and 7MF42.., only possible with process connection G½B according to EN 837-1.	

Selection and Ordering data	Order code
Further designs	
Please add "**-Z**" to Article No. and specify Order code.	
Sealing surface smooth, form B2 or RFSF (Stainless steel diaphragm)	**J11**
previously DIN 2501, form E	
Sealing surface groove, EN 1092-1, form D	**J14**
instead of sealing surface B1 (only for wetted parts made of stainless steel 316L)	
Sealing surface with spring according to EN 1092-1, form C, (previously DIN 2512, form F) in stainless steel 316L	
DN 25	**J30**
DN 40	**J31**
DN 50	**J32**
DN 80	**J33**
DN 100	**J34**
DN 125	**J35**
Sealing surface with male face according to EN 1092-1, form E (previously DIN 2512, form V13) in stainless steel 316L	
DN 25	**J40**
DN 40	**J41**
DN 50	**J42**
DN 80	**J43**
DN 100	**J44**
DN 125	**J45**
Sealing surface with female face according to EN 1092-1, form F (previously DIN 2512, form R13) in stainless steel 316L	
DN 25	**J50**
DN 40	**J51**
DN 50	**J52**
DN 80	**J53**
DN 100	**J54**
DN 125	**J55**
Sealing surface B1 or ASME B16.5 RF 125 ... 250 AA	**J12**
Instead of sealing surface B2 and RFSF (Only for wetted parts in Hastelloy C276 (2.4819), Tantal and Duplex 2205 (1.4462) and for sizes 2", 3", DN 50 and DN 80)	
Sealing surface RJF (groove, previously RTJ) ASME B16.5	**J24**
instead of sealing surface ASME B16.5 RF 125 ... 250 AA (only for wetted parts made of stainless steel 316L)	

© Siemens 2020

Diaphragm seals of flange design mounted directly and with capillary

Selection and Ordering data	Order code
Further designs	
Please add "**-Z**" to Article No. and specify Order code.	
Radial capillary pipe outlet	
for one-sided mounting	**K01**
PE protective tube	
over the spiral protective tube of the capillaries (color: white)	
1.0 m (3.28 ft)	**N20**
1.6 m (5.25 ft)	**N21**
2.0 m (6.56 ft)	**N22**
2.5 m (8.20 ft)	**N23**
3.0 m (9.84 ft)	**N24**
4.0 m (13.12 ft)	**N25**
5.0 m (16.40 ft)	**N26**
6.0 m (19.69 ft)	**N27**
7.0 m (22.97 ft)	**N28**
8.0 m (26.25 ft)	**N29**
9.0 m (29.53 ft)	**N30**
10.0 m (32.81 ft)	**N31**
PTFE protective tube	
over the spiral protective tube of the capillaries (color: transparent)	
1.0 m (3.28 ft)	**N40**
1.6 m (5.25 ft)	**N41**
2.0 m (6.56 ft)	**N42**
2.5 m (8.20 ft)	**N43**
3.0 m (9.84 ft)	**N44**
4.0 m (13.12 ft)	**N45**
5.0 m (16.40 ft)	**N46**
6.0 m (19.69 ft)	**N47**
7.0 m (22.97 ft)	**N48**
8.0 m (26.25 ft)	**N49**
9.0 m (29.53 ft)	**N50**
10.0 m (32.81 ft)	**N51**

Selection and Ordering data	Order code
Further designs	
Please add "**-Z**" to Article No. and specify Order code.	
PVC protective tube	
over the spiral protective tube of the capillaries (color: black)	
1.0 m (3.28 ft)	**N60**
1.6 m (5.25 ft)	**N61**
2.0 m (6.56 ft)	**N62**
2.5 m (8.20 ft)	**N63**
3.0 m (9.84 ft)	**N64**
4.0 m (13.12 ft)	**N65**
5.0 m (16.40 ft)	**N66**
6.0 m (19.69 ft)	**N67**
7.0 m (22.97 ft)	**N68**
8.0 m (26.25 ft)	**N69**
9.0 m (29.53 ft)	**N70**
10.0 m (32.81 ft)	**N71**
Elongated pipe, distance from transmitter process flange to flange is 150 mm instead of 100 mm, max. medium temperature 250 °C, observe the maximum permissible media temperature of the filling liquid.	**R15**
Elongated pipe, distance from transmitter process flange to flange is 100 mm instead of 100 mm, max. medium temperature 300 °C, observe the maximum permissible media temperature of the filling liquid.	**R20**
Negative pressure service	
for use in low-pressure range for transmitters for	
• differential pressure	**V03**
Extended negative pressure service	
for use in low-pressure range for transmitters for	
• differential pressure	**V53**

© Siemens 2020

Dimensional drawings

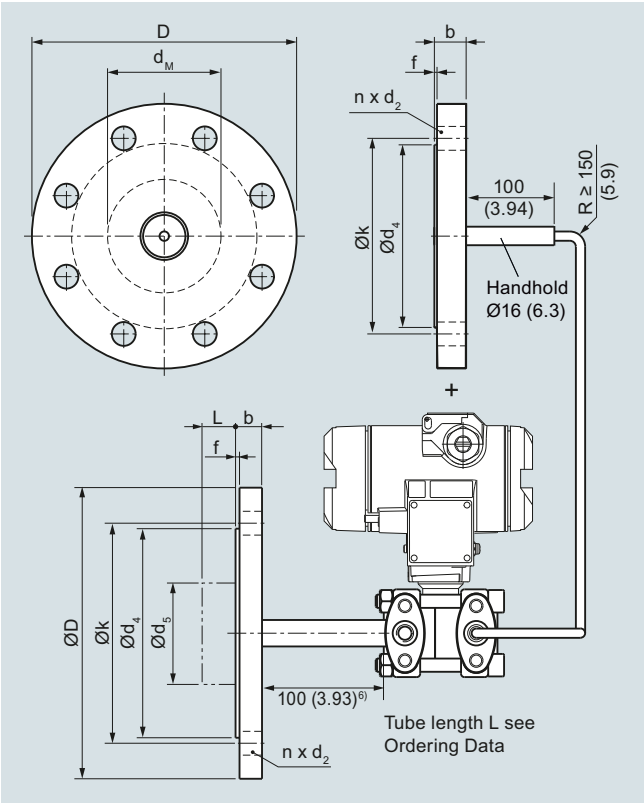

Diaphragm seals of screwed design with flexible capillary, fixed connection, for connection to a SITRANS P pressure transmitter for differential pressure, dimensions in mm (inch)

Connection to EN 1092-1

Nom. diam.	Nominal pressure	b	D	d_2	d_4	d_5	d_M	f	k	n
		mm	mm	mm	mm	mm	mm	mm	mm	
DN 50	PN 10/16/ 25/40	20	165	18	102	48.3	45[1)]	2	125	4
	PN 100	28	195	26	102	48.3	45[1)]	2	145	4
DN 80	PN 10/16/ 25/40	24	200	18	138	76	72[2)]	2	160	8
	PN 100	32	230	26	138	76	72[2)]	2	180	8
DN 100	PN 10/16	20	220	18	158	94	89	2	180	8
	PN 25/40	24	235	22	162	94	89	2	190	8

Connection to ASME B16.5

Nom. diam.	Nom. press.	b	D	d_2	d_4	d_5	d_M	f	k	n
	lb/ sq.in.	mm (inch)	mm (inch)	mm (inch)	mm (inch)	mm (inch)	mm (inch)	mm (inch)	mm (inch)	
2 inch	150	19.5	150	20	92	48.3	45[1)]	2	120.5	4
		(0.77)	(5.91)	(0.79)	(3.62)	(1.9)	(1.77)[1)]	(0.08)	(4.74)	
	300	22.7	165	20	92	48.3	45[1)]	2	127	8
		(0.89)	(6.5)	(0.79)	(3.62)	(1.9)	(1.77)[1)]	(0.08)	(5)	
	400/ 600	32.4	165	20	92	48.3	45[1)]	7	127	8
		(1.28)	(6.5)	(0.79)	(3.62)	(1.9)	(1.77)[1)]	(0.28)	(5)	
	900/ 1500	45.1	215	26	92	48.3	45[1)]	7	165	8
		(1.78)	(8.46)	(1.02)	(3.62)	(1.9)	(1.77)[1)]	(0.28)	(6.5)	
3 inch	150	24.3	190	20	127	76	72[2)]	2	152.5	4
		(0.96)	(7.48)	(0.79)	(5)	(3)	(2.83)[2)]	(0.08)	(6)	
	300	29	210	22	127	76	72[2)]	2	168.5	8
		(1.14)	(8.27)	(0.87)	(5)	(3)	(2.83)[2)]	(0.08)	(6.63)	
4 inch	150	24.3	230	20	158	94	89	2	190.5	8
		(0.96)	(9.06)	(0.79)	(6.22)	(3.69)	(3.50)	(0.08)	(7.5)	
	300	32.2	255	22	158	94	89	2	200	8
		(1.27)	(10.04)	(0.79)	(6.22)	(3.69)	(3.50)	(0.08)	(7.87)	

d: Inside diameter of gasket according to EN 1092-1 / ASME B16.5

d_M: Effective diaphragm diameter

1) 59 mm = 2.32 inch with tube length L = 0

2) 89 mm = 3½ inch with tube length L = 0

© Siemens 2020

Overview

Diaphragm seal, screwed gland design with inside diaphragm for gauge, absolute and differential pressure for direct mounting

Process connection: open measurement flange

Technical specifications

Diaphragm seal, screwed gland with inside diaphragm	
Process connection	Nominal pressure
• Male thread G½B to EN 837-1	PN 100, PN 250
• External thread ½-14" NPT-M	PN 100, PN 250
• open measurement flange	
- DN 25	PN 10 ... PN 40
- 1 inch	Class 150, class 300
Sealing surface for open measurement flange	
• For stainless steel, mat. no. 1.4404/316L	To EN 1092-1, form B1 or ASME B16.5 RF 125 ... 250 AA
Materials	
• Lower section (in the case of process connection thread)	Stainless steel, Mat. no. 1.4404/316L
• Diaphragm	Stainless steel, Mat. no. 1.4404/316L
	• No coating
	• With PTFE coating
	Monel 400, mat. no. 2.4360
	Hastelloy C276, mat. no. 2.4819
	Hastelloy C4, mat. no. 2.4602
	Tantal
	Stainless steel 316L, gold plated, thickness approx. 25 µm
• Top section (process connection in the case of an open measurement flange)	Stainless steel, mat. no. 1.4404/316L
• Capillary	Stainless steel, mat. no.1.4404/316L
• Sealing material on the process connection	Viton or copper (in the case of vacuum-free version)
• Sealing material between top and bottom section	Viton (FKM) (standard) Teflon (PTFE) metal spring ring (silver-coated)

Capillary	
• Length	Max. 10 m (32.8 ft)
• Internal diameter	2 mm (0.079 inch)
• Minimum bending radius	150 mm (5.9 inch)
• Sheath	Stainless steel protective tube, mat. No. 1.4301/304
Filling liquid	• Silicone oil M5 • Silicone oil M50 • High-temperature oil • Halocarbon oil (for measuring O_2) • Food oil (FDA listed)
Max. recommended temperature of medium	170 °C (338 °F)
Permissible ambient temperature	Dependent on the pressure transmitter and the filling liquid of the remote seal More information can be found in the technical specifications of the pressure transmitters and in the section "Technical data of filling liquid" in the introduction to the remote seals
Weight	Approx. 1.5 kg (3.3 lb)
Certificates and approvals	
Classification according to pressure equipment directive (PED 2014/68/EU)	For gases of fluid group 1 and liquids of fluid group 1; complies with requirements of article 4, paragraph 3 (sound engineering practice)

© Siemens 2020

Selection and Ordering data	Article No. Ord. Code
Remote seal, screwed gland with inside diaphragm	
Mounted on SITRANS P pressure transmitter for ↗	**7MF4930-**
• **gauge pressure** 7MF2033-...; 7MF403.-... and SITRANS P300, 7MF802.-... • **absolute pressure** 7MF423.-... and SITRANS P300, 7MF802.-... In conjunction with Order code "V01" (vacuum-proof design)	
Mounted on either side of SITRANS P pressure transmitter for ↗	**7MF4933-**
• **differential pressure** 7MF243.-...; 7MF443.-... and 7MF54..-...	
↗ Click on the Article No. for the online configuration in the PIA Life Cycle Portal.	■■■■■-■B■■■
Type	
• no flushing hole	1
• with flushing hole 1x 1/8 NPT unsealed (only with process connection 316L)	2
Other version, add Order code and plain text: Version: ...	9 H1Y
Process connection version	
Lower flange material / Process connection / Nominal diameter and pressure level	
316L/1.4404 / Thread / G½B/PN100	B
316L/1.4404 / Thread / G½B/PN250	C
316L/1.4404 / Thread / ½NPT-M/PN100	E
316L/1.4404 / Thread / ½NPT-M/PN250	F
316L/1.4404 / Thread / ½NPT-F/PN100	H
316L/1.4404 / Thread / ½NPT-F/PN250	J
316L/1.4404 / open measurement flange / DN 25/ PN 10 ... 40	N
316L/1.4404 / open measurement flange / 1"/Class 150	P
316L/1.4404 / open measurement flange / 1"/Class 300	Q
PTFE[1] / Thread / G½B/PN100	T
PTFE[1] / open measurement flange / DN 25/ PN 10 ... 40	U
PTFE[1] / open measurement flange / 1"/Class 150	V
PTFE[1] / open measurement flange / 1"/Class 300	W
Other version, add Order code and plain text: Lower flange material: ...; Process connection: ...; Nominal diameter/pressure level: ...	Z J1Y
Diaphragm material	
Stainless steel 316L	A
316L stainless steel with PTFE film	E
Monel 400	G
Hastelloy C276	J
Hastelloy C4	U
Tantalum	K
Stainless steel 316L, gold plated, thickness approx. 25 µm	S
Other version, add Order code and plain text: Diaphragm material: ...	Z K1Y

Selection and Ordering data	Article No. Ord. Code
Remote seal, screwed gland with inside diaphragm	
Mounted on SITRANS P pressure transmitter for	**7MF4930-**
• **gauge pressure** 7MF2033-...; 7MF403.-... and SITRANS P300, 7MF802.-... • **absolute pressure** 7MF423.-... and SITRANS P300, 7MF802.-... In conjunction with Order code "V01" (vacuum-proof design)	
Mounted on either side of SITRANS P pressure transmitter for	**7MF4933-**
• **differential pressure** 7MF243.-...; 7MF443.-... and 7MF54..-...	
	■■■■■-■B■■■
Sealing material between top and bottom section	
FKM (standard with diaphragm and 316L process connection)	1
PTFE (standard with custom material with max. 260 °C (500 °F))	2
Metal C- circlip, silver coated for > 260 °C (500 °F)) incl. high temperature-resistant screwed gland	3
Filling liquid	
• Silicone oil M5	1
• Silicone oil M50	2
• High-temperature oil	3
• Halocarbon oil (for measuring O_2)[2]	4
• Food oil (FDA-listed)	7
Other version, add Order code and plain text: filling liquid: ...	9 M1Y
Capillary length[3]	
• none, direct mounting	0
• none, direct mounting with cooling element (not in conjunction with transmitter for differential pressure)	1
• 1.0 m (3.28 ft)	2
• 1.6 m (5.25 ft)	3
• 2.5 m (8.20 ft)	4
• 4.0 m (13.1 ft)	5
• 6.0 m (19.7 ft)	6
• 8.0 m (26.25 ft)	7
• 10.0 m (32.8 ft)	8
Special lengths for capillaries	
• 2.0 m (6.56 ft)	9 N1C
• 3.0 m (9.84 ft)	9 N1E
• 5.0 m (16.40 ft)	9 N1G
• 7.0 m (23.97 ft)	9 N1J
• 9.0 m (29.53 ft)	9 N1L

1) Not in combination with flushing holes.
Not together with the options for negative pressure service (V01 and V03) and extended negative pressure service (V51 and V53).
2) Oil- and grease- free cleaning to DIN 25410, level 2 and packaging included in the scope of delivery. Refer to "Further designs" C10 and E10.
3) Max. capillary length, see section "Technical description".

© Siemens 2020

Diaphragm seal, screwed design, mounted directly or/and with capillary

Selection and Ordering data	Order code
Further designs	
Add "**-Z**" to Article No. and specify Order code.	
Remote seal nameplate Attached out of stainless steel, contains MLFB and order number of the remote seal	**B20**
Oil- and grease-free cleaned version Oil- and grease-free cleaned and packed version, not for oxygen application, only in conjunction with halocarbon oil fill fluid, certified by certificate acc. to EN 10204-2.2	**C10**
Quality Inspection Certificate (5-point characteristic curve test) according to IEC 60770-2	**C11**
Inspection certificate to EN 10204, section 3.1	**C12**
2.2 Certificate of FDA approval of fill oil Only in conjunction with "Food-grade oil" fill liquid (FDA listed)"	**C17**
Functional safety certificate ("SIL 2") to IEC 61508 (Only in conjunction with the Order code "C20" in the case of SITRANS P DSIII transmitter)	**C20**
Functional safety certificate ("SIL 2/3") to IEC 61508 (Only in conjunction with the Order code "C23" in the case of SITRANS P DSIII transmitter)	**C23**
Certification acc. to NACE MR-0175 Includes inspection certificate 3.1 according to EN 10204 (only for wetted parts made of stainless steel 1.4404/316L and Hastelloy C276)	**D07**
Certification acc. to NACE MR-0103 Includes inspection certificate 3.1 according to EN 10204 (only for wetted parts made of stainless steel 1.4404/316L and Hastelloy C276)	**D08**
Oil- and grease-free cleaned version Oil- and grease-free cleaned and packed version, only for oxygen application, only inert fill fluid may be used. Max. temperature: 60 °C (140 °F), max. pressure 50 bar (725 psi), only in connection with halocarbon oil, certified by certificate acc. to EN 10204-2.2	**E10**
Epoxy painting Not possible with negative pressure service. Color: transparent, coverage: front and rear of the remote seal, capillary(ies) or connecting tube, process connection of the transmitter. With transmitters 7MF40.. and 7MF42.., only possible with process connection G½B according to EN 837-1.	**E15**
One-sided mounting on differential pressure transmitters (only for 7MF4930-...)	
on high-pressure side	**H10**
on low-pressure side	**H11**
Sealing surface groove, EN 1092-1, form D instead of sealing surface B1 (only for wetted parts made of stainless steel 316L)	**J14**
Sealing surface RJF (groove, previously RTJ) ASME B16.5 instead of sealing surface ASME B16.5 RF 125 ... 250 AA (only for wetted parts made of stainless steel 316L)	**J24**
Sealing surface with spring according to EN 1092-1, form C, (previously DIN 2512, form F) in stainless steel 316L	
DN 25	**J30**
DN 40	**J31**

Selection and Ordering data	Order code
Further designs	
Add "**-Z**" to Article No. and specify Order code.	
PE protective tube over the spiral protective tube of the capillaries (color: white)	
1.0 m (3.28 ft)	**N20**
1.6 m (5.25 ft)	**N21**
2.0 m (6.56 ft)	**N22**
2.5 m (8.20 ft)	**N23**
3.0 m (9.84 ft)	**N24**
4.0 m (13.12 ft)	**N25**
5.0 m (16.40 ft)	**N26**
6.0 m (19.69 ft)	**N27**
7.0 m (22.97 ft)	**N28**
8.0 m (26.25 ft)	**N29**
9.0 m (29.53 ft)	**N30**
10.0 m (32.81 ft)	**N31**
PTFE protective tube over the spiral protective tube of the capillaries (color: transparent)	
1.0 m (3.28 ft)	**N40**
1.6 m (5.25 ft)	**N41**
2.0 m (6.56 ft)	**N42**
2.5 m (8.20 ft)	**N43**
3.0 m (9.84 ft)	**N44**
4.0 m (13.12 ft)	**N45**
5.0 m (16.40 ft)	**N46**
6.0 m (19.69 ft)	**N47**
7.0 m (22.97 ft)	**N48**
8.0 m (26.25 ft)	**N49**
9.0 m (29.53 ft)	**N50**
10.0 m (32.81 ft)	**N51**
PVC protective tube over the spiral protective tube of the capillaries (color: black)	
1.0 m (3.28 ft)	**N60**
1.6 m (5.25 ft)	**N61**
2.0 m (6.56 ft)	**N62**
2.5 m (8.20 ft)	**N63**
3.0 m (9.84 ft)	**N64**
4.0 m (13.12 ft)	**N65**
5.0 m (16.40 ft)	**N66**
6.0 m (19.69 ft)	**N67**
7.0 m (22.97 ft)	**N68**
8.0 m (26.25 ft)	**N69**
9.0 m (29.53 ft)	**N70**
10.0 m (32.81 ft)	**N71**
Negative pressure service for use in low-pressure range for transmitters for	
• gauge and absolute pressure from the pressure series	**V01**
• differential pressure	**V03**
Extended negative pressure service for use in low-pressure range for transmitters for	
• gauge and absolute pressure from the pressure series	**V51**
• differential pressure	**V53**

© Siemens 2020

Dimensional drawings

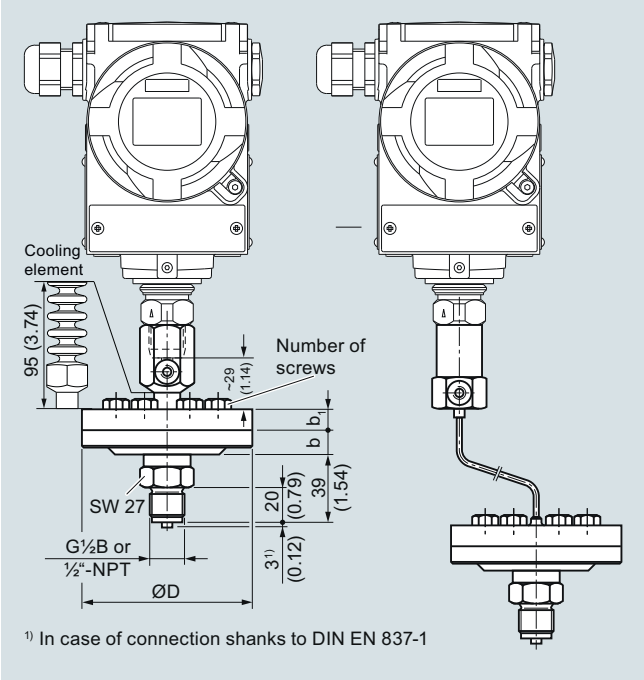

Diaphragm seal, screwed gland with inside diaphragm, for gauge and absolute pressure, direct and attached directly to the transmitter with with capillaries, dimensions in mm (inch)

Range	D mm	b mm	b_1 mm	Number of screws
up to 100 bar	98	14	16	6
up to 250 bar	98	14	20	12

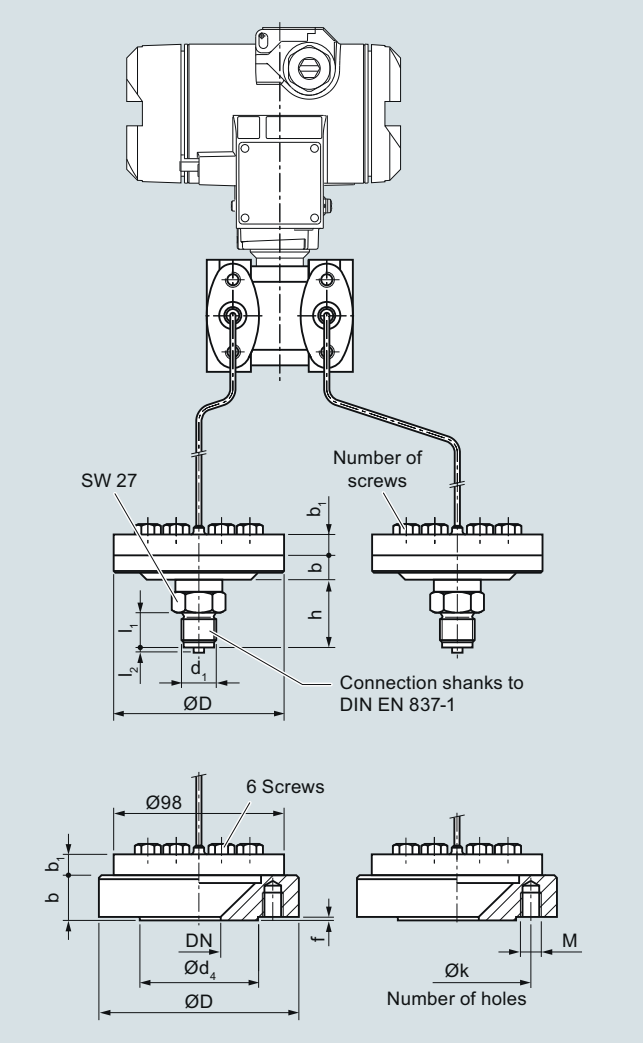

Diaphragm seal, screwed gland with inside diaphragm, for differential pressure, direct and attached directly to the transmitter with with capillaries, dimensions in mm (inch)

Nominal diameter	Nominal pressure	D mm	d_4 mm	k mm	M	Number of holes	b mm	b_1 mm	f mm
DN 25	PN 10/16/25/40	115	68	85	M12	4	26	12	2
1 inch	150 lb/sq.in	108	50.8	79.2	M12	4	22	12	1.6
1 inch	300 lb/sq.in	124	50.8	88.9	M16	4	22	12	1.6

© Siemens 2020

Overview

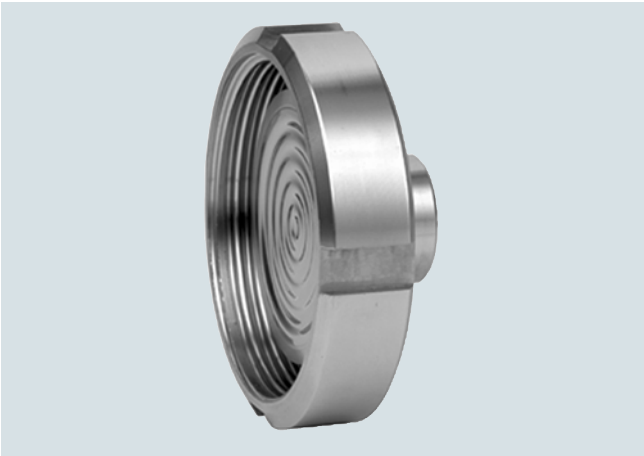

Quick-release diaphragm seals, to DIN 11851 with slotted union nut

Quick-release diaphragm seals, with clamp connection

Quick-release diaphragm seals are available for the following SITRANS P pressure transmitter series:

- For pressure: P300, DS III with HART, DS III with PROFIBUS PA and DS III with FOUNDATION Fieldbus
- For differential pressure and flow: P500, DS III with HART, DS III with PROFIBUS PA and DS III with FOUNDATION Fieldbus
- The quick-release remote seals are common designs in the food industry. Their design means that the medium cannot accumulate in dead volumes. The quick-release clamp present on the remote seal means that quick dismounting is possible for cleaning.

Technical specifications

Quick-release diaphragm seal	
Connection, nominal diameter	Nominal pressure
For pressure	
• To DIN 11851 with slotted union nut	
- DN 25	PN 40
- DN 32	PN 40
- DN 40	PN 40
- DN 50	PN 25
- DN 65	PN 25
- DN 80	PN 25
• To DIN 11851 with threaded socket	
- DN 25	PN 40
- DN 32	PN 40
- DN 40	PN 40
- DN 50	PN 25
- DN 65	PN 25
- DN 80	PN 25
• Clamp connection	
- 1½ inch	PN 16
- 2 inch	PN 16
- 2½ inch	PN 16
- 3 inch	PN 10
For differential pressure and flow	
• To DIN 11851 with slotted union nut	
- DN 50	PN 25
- DN 65	PN 25
- DN 80	PN 25
• To DIN 11851 with threaded socket	
- DN 50	PN 25
- DN 65	PN 25
- DN 80	PN 25
• Clamp connection	
- 2 inch	PN 16
- 2½ inch	PN 16
- 3 inch	PN 10
Sealing surface	
• For stainless steel, mat. No. 1.4404/316L	To EN 1092-1, form B1 or ASME B 16.5RF 125 ... 250 AA
• For the other materials	To EN 1092-1, form B2 or ASME B16.5 RFSF
Materials	
• Main body	Stainless steel 316L
• Wetted parts	Stainless steel 316L
• Capillary	Stainless steel, mat. No. 1.4571/316Ti
• Sheath	Spiral protective tube made of stainless steel, mat. no.1.4404/316L
Maximum pressure	See above and the technical data of the pressure transmitter
Tube length	Without tube
Capillary	
• Length	Max. 10 m (32.8 ft), longer lengths on request
• Internal diameter	2 mm (0.079 inch)
• Minimum bending radius	150 mm (5.9 inch)
• Sheath	Spiral protective tube made of stainless steel, mat. No. 1.4301/316
Filling liquid	Food oil (FDA listed)
Permissible ambient temperature	Dependent on the pressure transmitter and the filling liquid of the remote seal More information can be found in the technical data of the pressure transmitters and in the section "Technical data of filling liquid" in the Technical description to the remote seals
Weight	Approx. 4 kg (8.82 lb)
Certificates and approvals	
Classification according to pressure equipment directive (DGRL 2014/68/EU)	For gases of fluid group 1 and liquids of fluid group 1; complies with requirements of article 4, paragraph 3 (sound engineering practice)
EHEDG	Complies with EHEDG recommendations

© Siemens 2020

Selection and Ordering data		Article No. Ord. code
Quick-release diaphragm seal ↗		7 M F 4 9 4 0 -
for SITRANS P pressure transmitters for pressure 7MF2033-...; 7MF403.-... and 7MF423.-... together with Order code "V01" (Negative pressure service) and 7MF802.-...[1]; must be ordered separately Filling liquid: Food oil (FDA listed) Material: Stainless steel, mat. No. 1.4435		■■ A 0 ■ - ■ B ■■■
↗ Click on the Article No. for the online configuration in the PIA Life Cycle Portal.		
Nom. diam.	**Nominal pressure**	
• Connection to DIN 11851 with slotted union nut		
- DN 25	PN 40	1 B
- DN 32	PN 40	1 C
- DN 40	PN 40	1 D
- DN 50	PN 25	1 E
- DN 65	PN 25	1 F
- DN 80	PN 25	1 G
• Connection to DIN 11851 with screw necks		
- DN 25	PN 40	2 B
- DN 32	PN 40	2 C
- DN 40	PN 40	2 D
- DN 50	PN 25	2 E
- DN 65	PN 25	2 F
- DN 80	PN 25	2 G
• Tri-Clamp connection to DIN 32676/ISO 2852		
- DN 40/1½ inch	PN 16	4 L
- DN 50/2 inch	PN 16	4 M
- DN 65/2½ inch	PN 16	4 N
- DN 80/3 inch	PN 10	4 P
Other version Add Order codes and plain text: Process connection: ..., Nominal diameter: ...; Nominal pressure: ...		9 A H 1 Y
Filling liquid		
• Food oil (FDA listed)		7
Other version Add Order code and plain text: Filling liquid: ...		9 M 1 Y
Connection to pressure transmitter		
• direct		0
through capillary, length:[2]		
• 1.0 m	(3.28 ft)	2
• 1.6 m	(5.25 ft)	3
• 2.5 m	(8.20 ft)	4
• 4.0 m	(13.1 ft)	5
• 6.0 m	(19.7 ft)	6
• 8.0 m	(26.25 ft)	7
• 10.0 m	(32.8 ft)	8
Special lengths for capillaries		
• 2.0 m	(6.56 ft)	9 N 1 C
• 3.0 m	(9.84 ft)	9 N 1 E
• 5.0 m	(16.40 ft)	9 N 1 G
• 7.0 m	(23.97 ft)	9 N 1 J
• 9.0 m	(29.53 ft)	9 N 1 L

1) With 7MF802.-... and the measuring cells Q, S, T and U also order the vacuum-tight version.
2) Max. capillary length, see section "Technical description"

Selection and Ordering data		Ord. code
Further designs		
Please add "**-Z**" to Article No. and specify Order code.		
Remote seal nameplate Attached out of stainless steel, contains MLFB and order number of the remote seal		**B20**
Quality Inspection Certificate (5-point characteristic curve test) according to IEC 60770-2		**C11**
Inspection certificate to EN 10204, section 3.1		**C12**
2.2 Certificate of FDA approval of fill oil Only in conjunction with "Food-grade oil" fill liquid (FDA listed)"		**C17**
Functional safety certificate ("SIL 2") to IEC 61508 (Only in conjunction with the Order code "C20" in the case of SITRANS P DSIII transmitter)		**C20**
Functional safety certificate ("SIL 2/3") to IEC 61508 (Only in conjunction with the Order code "C23" in the case of SITRANS P DSIII transmitter)		**C23**
One-sided mounting on differential pressure transmitters (only for 7MF4940-...)		
on high-pressure side		**H10**
on low-pressure side		**H11**
PE protective tube over the spiral protective tube of the capillaries (color: white)		
1.0 m	(3.28 ft)	**N20**
1.6 m	(5.25 ft)	**N21**
2.0 m	(6.56 ft)	**N22**
2.5 m	(8.20 ft)	**N23**
3.0 m	(9.84 ft)	**N24**
4.0 m	(13.12 ft)	**N25**
5.0 m	(16.40 ft)	**N26**
6.0 m	(19.69 ft)	**N27**
7.0 m	(22.97 ft)	**N28**
8.0 m	(26.25 ft)	**N29**
9.0 m	(29.53 ft)	**N30**
10.0 m	(32.81 ft)	**N31**
PTFE protective tube over the spiral protective tube of the capillaries (color: transparent)		
1.0 m	(3.28 ft)	**N40**
1.6 m	(5.25 ft)	**N41**
2.0 m	(6.56 ft)	**N42**
2.5 m	(8.20 ft)	**N43**
3.0 m	(9.84 ft)	**N44**
4.0 m	(13.12 ft)	**N45**
5.0 m	(16.40 ft)	**N46**
6.0 m	(19.69 ft)	**N47**
7.0 m	(22.97 ft)	**N48**
8.0 m	(26.25 ft)	**N49**
9.0 m	(29.53 ft)	**N50**
10.0 m	(32.81 ft)	**N51**

© Siemens 2020

Selection and Ordering data	Ord. code
Further designs	
Please add "**-Z**" to Article No. and specify Order code.	
PVC protective tube	
over the spiral protective tube of the capillaries (color: black)	
1.0 m (3.28 ft)	**N60**
1.6 m (5.25 ft)	**N61**
2.0 m (6.56 ft)	**N62**
2.5 m (8.20 ft)	**N63**
3.0 m (9.84 ft)	**N64**
4.0 m (13.12 ft)	**N65**
5.0 m (16.40 ft)	**N66**
6.0 m (19.69 ft)	**N67**
7.0 m (22.97 ft)	**N68**
8.0 m (26.25 ft)	**N69**
9.0 m (29.53 ft)	**N70**
10.0 m (32.81 ft)	**N71**
Cooling element	**R22**
max. medium temperature 300 °C, observe the maximum permissible media temperature of the filling liquid.	
Negative pressure service	
for use in low-pressure range for transmitters for	
• gauge and absolute pressure from the pressure series	**V01**
Extended negative pressure service	
for use in low-pressure range for transmitters for	
• gauge and absolute pressure from the pressure series	**V51**

© Siemens 2020

Selection and Ordering data		Article No. Ord. code
Quick-release diaphragm seal ↗		7 M F 4 9 4 3 -
for SITRANS P pressure transmitters for pressure for differential pressure and flow, type 7MF243.-...; 7MF443.-... and 7MF54..-...; order separately Filling liquid: Food oil (FDA listed) Material: Stainless steel, mat. No. 1.4435 Delivery unit: 2 off		■■ A 0 ■ - ■ B ■■■
↗ Click on the Article No. for the online configuration in the PIA Life Cycle Portal.		
Nom. diam.	**Nominal pressure**	
• Connection to DIN 11851 with slotted union nut		
- DN 50	PN 25	1 E
- DN 65	PN 25	1 F
- DN 80	PN 25	1 G
• Connection to DIN 11851 with threaded socket		
- DN 50	PN 25	2 E
- DN 65	PN 25	2 F
- DN 80	PN 25	2 G
• Tri-Clamp connection to DIN 32676/ ISO 2852		
- DN 50/2 inch	PN 16	4 M
- DN 65/2½ inch	PN 16	4 N
- DN 80/3 inch	PN 10	4 P
Other version Add Order codes and plain text: Process connection: ..., Nominal diameter: ...; Nominal pressure: ...		9 A H 1 Y
Filling liquid		
• Food oil (FDA listed)		7
Other version Add Order code and plain text: Filling liquid: ...		9 M 1 Y
Connection to transmitter		
through capillary, Length:[1]		
• 1.0 m (3.28 ft)		2
• 1.6 m (5.25 ft)		3
• 2.5 m (8.20 ft)		4
• 4.0 m (13.1 ft)		5
• 6.0 m (19.7 ft)		6
• 8.0 m (26.25 ft)		7
• 10.0 m (32.8 ft)		8
Special lengths for capillaries		
• 2.0 m (6.56 ft)		9 N 1 C
• 3.0 m (9.84 ft)		9 N 1 E
• 5.0 m (16.40 ft)		9 N 1 G
• 7.0 m (23.97 ft)		9 N 1 J
• 9.0 m (29.53 ft)		9 N 1 L

[1] Max. capillary length, see section "Technical description"

Selection and Ordering data	Order code
Further designs	
Please add "**-Z**" to Article No. and specify Order code.	
Remote seal nameplate Attached out of stainless steel, contains MLFB and order number of the remote seal	**B20**
Quality Inspection Certificate (5-point characteristic curve test) according to IEC 60770-2	**C11**
Inspection certificate to EN 10204, section 3.1	**C12**
2.2 Certificate of FDA approval of fill oil Only in conjunction with "Food-grade oil" fill liquid (FDA listed)"	**C17**
Functional safety certificate ("SIL 2") to IEC 61508 (Only in conjunction with the Order code "C20" in the case of SITRANS P DSIII transmitter)	**C20**
Functional safety certificate ("SIL 2/3") to IEC 61508 (Only in conjunction with the Order code "C23" in the case of SITRANS P DSIII transmitter)	**C23**
PE protective tube over the spiral protective tube of the capillaries (color: white)	
1.0 m (3.28 ft)	**N20**
1.6 m (5.25 ft)	**N21**
2.0 m (6.56 ft)	**N22**
2.5 m (8.20 ft)	**N23**
3.0 m (9.84 ft)	**N24**
4.0 m (13.12 ft)	**N25**
5.0 m (16.40 ft)	**N26**
6.0 m (19.69 ft)	**N27**
7.0 m (22.97 ft)	**N28**
8.0 m (26.25 ft)	**N29**
9.0 m (29.53 ft)	**N30**
10.0 m (32.81 ft)	**N31**
PTFE protective tube over the spiral protective tube of the capillaries (color: transparent)	
1.0 m (3.28 ft)	**N40**
1.6 m (5.25 ft)	**N41**
2.0 m (6.56 ft)	**N42**
2.5 m (8.20 ft)	**N43**
3.0 m (9.84 ft)	**N44**
4.0 m (13.12 ft)	**N45**
5.0 m (16.40 ft)	**N46**
6.0 m (19.69 ft)	**N47**
7.0 m (22.97 ft)	**N48**
8.0 m (26.25 ft)	**N49**
9.0 m (29.53 ft)	**N50**
10.0 m (32.81 ft)	**N51**

© Siemens 2020

Selection and Ordering data	Order code
Further designs	
Please add "**-Z**" to Article No. and specify Order code.	
PVC protective tube	
over the spiral protective tube of the capillaries (color: black)	
1.0 m (3.28 ft)	**N60**
1.6 m (5.25 ft)	**N61**
2.0 m (6.56 ft)	**N62**
2.5 m (8.20 ft)	**N63**
3.0 m (9.84 ft)	**N64**
4.0 m (13.12 ft)	**N65**
5.0 m (16.40 ft)	**N66**
6.0 m (19.69 ft)	**N67**
7.0 m (22.97 ft)	**N68**
8.0 m (26.25 ft)	**N69**
9.0 m (29.53 ft)	**N70**
10.0 m (32.81 ft)	**N71**
Negative pressure service	
for use in low-pressure range for transmitters for	
• differential pressure	**V03**
Extended negative pressure service	
for use in low-pressure range for transmitters for	
• differential pressure	**V53**

© Siemens 2020

Dimensional drawings

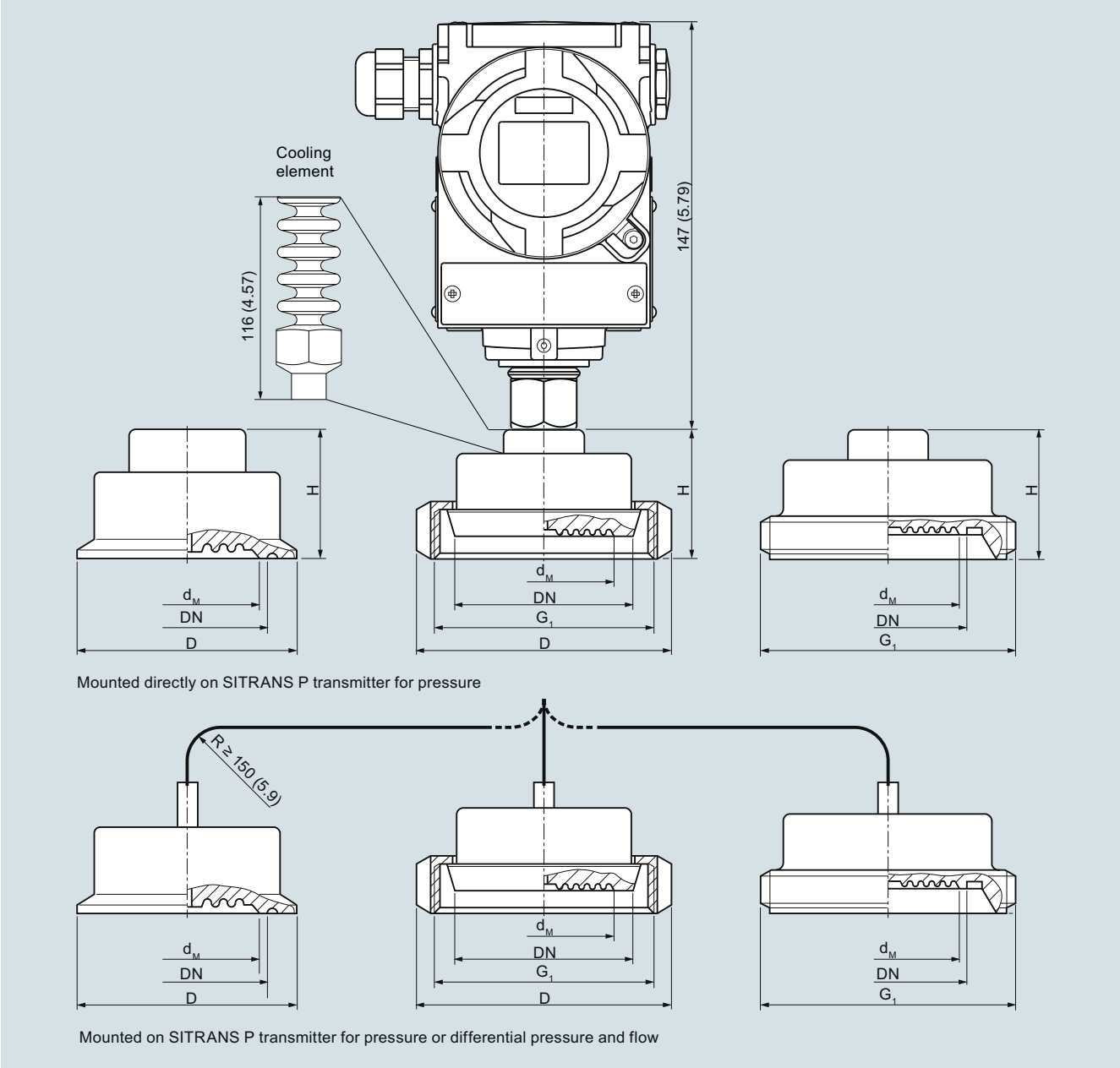

Quick-release diaphragm seal, dimensions in mm (inch)

Clamp connection (left)						
DN	**Ø d_M**		**Ø D**		**H**	
40 (1½ inch)	32	(1.26)	50.5	(2)	35	(1.38)
50 (2 inch)	40	(1.57)	64	(2.52)	35	(1.38)
65 (2½ inch)	52	(2.05)	77.5	(3.05)	35	(1.38)
80 (3 inch)	72	(2.83)	91	(3.58)	35	(1.38)

Connection to DIN 11851 with slotted union nut (center)				
DN	**Ø d_M**	**Ø D**	**H**	**G_1**
25	25	63	36	Rd 52x1/6
32	32	70	36	Rd 52x1/6
40	40	78	36	Rd 65x1/6
50	52	112	36	Rd 78x1/6
65	65	112	36	Rd 95x1/6
80	72	127	36	Rd 110x1/6
25	25	63	36	Rd 52x1/6

Connection to DIN 11851 with threaded socket (right)			
DN	**Ø d_M**	**H**	**G_1**
25	25	36	Rd 52x1/6
32	32	36	Rd 52x1/6
40	40	36	Rd 65x1/6
50	52	36	Rd 78x1/6
65	65	36	Rd 95x1/6
80	72	36	Rd 110x1/6

d_M Effective diaphragm diameter

© Siemens 2020

Overview

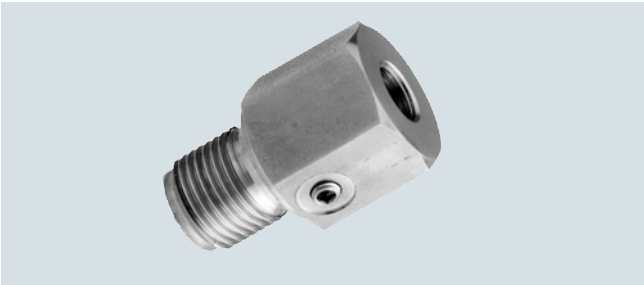

Miniature diaphragm seals

The miniature diaphragm seals are available for the following SITRANS P pressure transmitter series for pressure:

- P300, DS III with HART, DS III with PROFIBUS PA and DS III with FOUNDATION Fieldbus

Suitable for high pressures, contaminated, fibrous and viscous media in the chemical, paper, food and drink industries.

Design

- Flush-mounted diaphragm
- No dead spaces
- Fixed threaded stems

Dimensional drawings

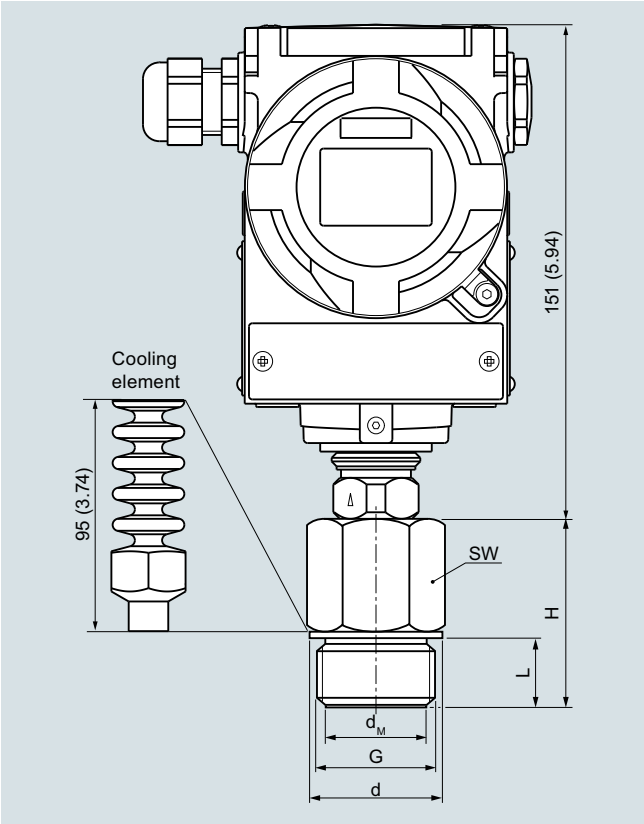

Miniature diaphragm seal, dimensions in mm (inch)

G	Ø d_M		SW		Ø d		L		H	
	mm	(inch)	mm	(inch)	mm	(inch)	mm	(inch)	mm	(inch)
G1B	25	(0.98)	41	(1.61)	39	(1.53)	28	(1.1)	56	(2.21)
G1½B	40	(1.57)	55	(2.17)	60	(2.36)	30	(1.18)	50	(1.97)
G2B	50	(1.97)	60	(2.36)	70	(2.76)	30	(1.18)	63	(2.48)

G	Ø d_M		SW		L		H	
	mm	(inch)	mm	(inch)	mm	(inch)	mm	(inch)
1"-NPT	27	(1.06)	41	(1.61)	25	(0.98)	40	(1.57)
1½"-NPT	34	(1.34)	55	(2.17)	26	(1.02)	45	(1.77)
2"-NPT	46	(1.81)	65	(2.56)	26	(1.02)	45	(1.77)

d_M: Effective diaphragm diameter

Technical specifications

Miniature diaphragm seals	
Measuring span when • G1B and 1"-NPT • G1½B and 1½"-NPT • G2B and 2"-NPT	 > 6 bar (> 87 psi) > 2 bar (> 29 psi) > 600 mbar (> 8.7 psi)
Filling liquid	Silicone oil M5 or food oil (FDA listed)
Material • Main body • Diaphragm	 Stainl. steel mat No. 1.4404/ 316L or Hastelloy C276, mat No. 2.4819 Stainl. steel mat No. 1.4404 / 316L or Hastelloy C276, mat. No. 2.4819
Maximum pressure	100% of nominal pressure of pressure transmitter, up to maximum of PN 400 (5802 psi) (depending on the seal used)
Temperature of use	Same as pressure transmitter
Temperature range of medium	Same as pressure transmitter
Max. recommended temperature of medium	150 °C (302 °F)
Weight • G1B and 1"-NPT • G1½B and 1½"-NPT • G2B and 2"-NPT	 Approx. 0.3 kg (approx. 0.66 lb) Approx. 0.5 kg (approx. 1.10 lb) Approx. 0.8 kg (approx. 1.76 lb)
Certificate and approvals	
Classification according to pressure equipment directive (DGRL 2014/68/EU)	For gases of fluid group 1 and liquids of fluid group 1; complies with requirements of article 4, paragraph 3 (sound engineering practice)

© Siemens 2020

Selection and Ordering data	Article No. Ord. code
Miniature diaphragm seals ↗	7MF4960-
directly fitted to SITRANS P pressure transmitters for pressure; type, 7MF2033-...; 7MF403.-... and 7MF423.-... together with Order code "V01" (vacuum-proof design) and 7MF802.-...[1]; must be ordered separately Material: Stainless steel, mat. No. 1.4404/316L Nominal pressure, see "Pressure transmitters"	1 ■■0■ ■■■
↗ Click on the Article No. for the online configuration in the PIA Life Cycle Portal.	
Process connection	
• G1B	C
• G1½B	D
• G2B	E
• 1" - NPT	K
• 1½" - NPT	L
• 2" - NPT	M
Other version, add Order code and plain text: Process connection: ...	Z J1Y
Material	
Remote seal enclosure / Wetted parts materials	
Stainless steel mat. No. 1.4404/316L / Stainless steel mat. No. 1.4404/316L	A
Hastelloy C276 / Hastelloy C276	J
Stainless steel mat. No. 1.4404/316L / Other version Add Order code and plain text: Wetted parts materials	Z K1Y
Wetted parts materials	
• Stainless steel 316L	A
Other version, add Order code and plain text: Wetted parts materials: ...	Z K1Y
Filling liquid	
• Silicone oil M5	1
• Food oil (FDA listed)	7
Other version, add Order code and plain text: Filling liquid: ...	9 M1Y

[1] With 7MF802.-... and the measuring cells Q, S, T and U also order the vacuum-tight version.

Selection and Ordering data	Order code
Further designs Please add "**-Z**" to Article No. and specify Order code.	
Remote seal nameplate Attached out of stainless steel, contains MLFB and order number of the remote seal	**B20**
Quality Inspection Certificate (5-point characteristic curve test) according to IEC 60770-2	**C11**
Inspection certificate to EN 10204, section 3.1	**C12**
2.2 Certificate of FDA approval of fill oil Only in conjunction with "Food-grade oil" fill liquid (FDA listed)"	**C17**
Functional safety certificate ("SIL 2") to IEC 61508 (Only in conjunction with the Order code "C20" in the case of SITRANS P DSIII transmitter)	**C20**
Functional safety certificate ("SIL 2/3") to IEC 61508 (Only in conjunction with the Order code "C23" in the case of SITRANS P DSIII transmitter)	**C23**
Certification acc. to NACE MR-0175 Includes inspection certificate 3.1 according to EN 10204 (only for wetted parts made of stainless steel 1.4404/316L and Hastelloy C276)	**D07**
Certification acc. to NACE MR-0103 Includes inspection certificate 3.1 according to EN 10204 (only for wetted parts made of stainless steel 1.4404/316L and Hastelloy C276)	**D08**
Cooling element max. medium temperature 300 °C, observe the maximum permissible media temperature of the filling liquid.	**R22**
Negative pressure service for use in low-pressure range for transmitters for • gauge and absolute pressure from the pressure series	**V01**
Extended negative pressure service for use in low-pressure range for transmitters for • gauge and absolute pressure from the pressure series	**V51**

© Siemens 2020

Overview

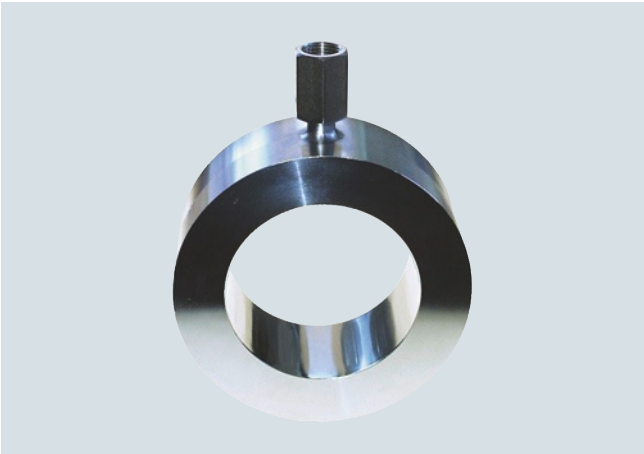

Inline seals for flange-mounting

The inline seal is completely integrated in the process line. It is particularly suitable for flowing and highly viscous media.

The inline seal consists of a cylindrical jacket into which a thin-walled pipe is welded. It is clamped directly between two flanges in the pipeline.

Design

- Inline seals for flange-mounting (flange design) to EN/ASME for SITRANS P pressure transmitters
  - For pressure: P300, DS III with HART, DS III with PROFIBUS PA and DS III with FOUNDATION Fieldbus
  - For differential pressure and flow: DS III with HART, DS III with PROFIBUS PA, DS III with FOUNDATION Fieldbus and P500
- Sealing surface to EN 1092-1 or ASME B16.5
- Connection to the transmitter directly or by means of a flexible capillary (max. 10 m long)
- See Technical data for details of materials used for the wetted parts
- Material used for the capillary, the guard sleeve, the seal's main body and the measuring cell: Stainless steel, mat.-No. 1.4571
- Filling liquid: Silicone oil, high-temperature oil, halocarbon oil, food oil (FDA listed) or glycerin/water (not suitable for uses in low-pressure range)

Function

The measured pressure is transferred from the diaphragm to the filling liquid and passes either directly or through the capillary to the measuring chamber of the pressure transmitter. The interior of the diaphragm seal and of the capillary, as well as the measuring chamber of the pressure transmitter, are filled gas-free by the filling liquid.

Note:

When operating in the low-pressure range, also during commissioning, it is recommended to use a vacuum-proof remote seal (see Selection and Ordering data).

Technical specifications

Inline seals for flange-mounting	
Nominal diameter	Nominal pressure
• DN 25	PN 6 ... PN 100
• DN 40	PN 6 ... PN 100
• DN 50	PN 6 ... PN 100
• DN 80	PN 6 ... PN 100
• DN 100	PN 6 ... PN 100
• 1 inch	Class 150 ... class 2500
• 1½ inch	Class 150 ... class 2500
• 2 inch	Class 150 ... class 2500
• 3 inch	Class 150 ... class 2500
• 4 inch	Class 150 ... class 2500
Process connection	Flange to EN 1092-1 or ASME B 16.5
Sealing surface	• for stainless steel mat. no. 1.4404/316L according to EN 1092-1, form B1 or ASME B16.5 RF 125 ... 250 AA • for all other materials according to EN 1092-1, form B2 or ASME B16.5 RFSF
Materials	
• Main body	Stainless steel 1.4404/316L
• Diaphragm	Stainless steel 1.4404/316L
• Wetted parts	Stainless steel 1.4404/316L • Without coating • ECTFE coating (for vacuum on request) • PFA coating Monel 400, mat. No. 2.4360 Hastelloy C276, mat. No. 2.4819 Hastelloy C4, mat. No. 2.4602 Tantalum
• Capillary	Stainless steel, mat. No. 1.4571/316Ti
• Sheath	Spiral protective tube made of stainless steel, mat. No. 1.4404/316L
Capillary	
• Length	Max. 10 m (32.8 ft)
• Internal diameter	2 mm (0.079 inch)
• Minimum bending radius	150 mm (5.9 inch)
Filling liquid	Silicone oil M5 Silicone oil M50 High-temperature oil Halocarbon oil Food oil (FDA listed)
Permissible ambient temperature	See pressure transmitters, see filling liquid
Weight	Approx. 4 kg (8.82 lb)
Certificates and approvals	
Classification according to pressure equipment directive (DGRL 2014/68/EU)	For gases of fluid group 1 and liquids of fluid group 1; complies with the requirements of article 4, paragraph 1 (appendix 1); assigned to category III, conformity evaluation module H by the TÜV Nord

© Siemens 2020

Selection and Ordering data	Article No.Ord. code
Inline seal for flange-mounting for SITRANS P pressure transmitters	
for gauge pressure ↗ 7MF2033-...; 7MF403.-... and 7MF423.-... together with Order code "V01" (Negative pressure service) and 7MF802.-...[1]; must be ordered separately, scope of delivery: 1 off	**7MF4980-**
for differential pressure and flow ↗ 7MF243.-...; 7MF4433 or 7MF54..-...; order separately, scope of delivery: 1 pair (set); Material: Completely of stainless steel, mat. No. 1.4404/316L; Process connection to EN 1092-1 or ASME B16.5; sealing surface to EN 1092-1, form B1, or to ASME B16.5 RF 125 ... 250 AA	**7MF4983-**
↗ Click on the Article No. for the online configuration in the PIA Life Cycle Portal.	**1 ■■ 0 ■ - ■ B ■■■**
Nominal diameter and nominal pressure	
• DN 25 PN 6 ... 100	**B**
• DN 40 PN 6 ... 100	**D**
• DN 50 PN 6 ... 100	**E**
• DN 80 PN 6 ... 100	**G**
• DN 100 PN 6 ... 100	**H**
• 1 inch Class 150 ... 2500	**L**
• 1½ inch Class 150 ... 2500	**M**
• 2 inch Class 150 ... 2500	**N**
• 3 inch Class 150 ... 2500	**P**
• 4 inch Class 150 ... 2500	**Q**
Other version Add Order code and plain text: Nominal diameter: ...; Nominal pressure: ...	**Z** **J 1 Y**
Wetted parts materials	
• Stainless steel 316L	
- Without coating	**A**
- With PFA coating [2]	**D**
- With ECTFE coating [2] [3]	**F**
• Monel 400, mat. No. 2.4360	**G**
• Hastelloy C276, mat. No. 2.4819	**J**
• Hastelloy C4, mat. No. 2.4602	**U**
• Tantalum	**K**
Other version Add Order code and plain text: Wetted parts materials: ...	**Z** **K 1 Y**
Filling liquid	
• Silicone oil M5	**1**
• Silicone oil M50	**2**
• High-temperature oil	**3**
• Halocarbon oil (for measuring O_2)[4]	**4**
• Food oil (FDA listed)	**7**
Other version Add Order code and plain text: Filling liquid: ...	**9** **M 1 Y**

Selection and Ordering data	Article No.Ord. code
Inline seal for flange-mounting for SITRANS P pressure transmitters	
for gauge pressure 7MF2033-...; 7MF403.-... and 7MF423.-... together with Order code "V01" (Negative pressure service) and 7MF802.-...[1]; must be ordered separately, scope of delivery: 1 off	**7MF4980-**
for differential pressure and flow 7MF243.-...; 7MF4433 or 7MF54..-...; order separately, scope of delivery: 1 pair (set); Material: Completely of stainless steel, mat. No. 1.4404/316L; Process connection to EN 1092-1 or ASME B16.5; sealing surface to EN 1092-1, form B1, or to ASME B16.5 RF 125 ... 250 AA	**7MF4983-**
	1 ■■ 0 ■ - ■ B ■■■
Connection to transmitter	
• direct (only for 7MF4980)	**0**
through capillary, length:[5]	
• 1.0 m (3.28 ft)	**2**
• 1.6 m (5.25 ft)	**3**
• 2.5 m (8.20 ft)	**4**
• 4.0 m (13.1 ft)	**5**
• 6.0 m (19.7 ft)	**6**
• 8.0 m (26.25 ft)	**7**
• 10.0 m (32.8 ft)	**8**
Special lengths for capillaries	
• 2.0 m (6.56 ft)	**9** **N 1 C**
• 3.0 m (9.84 ft)	**9** **N 1 E**
• 5.0 m (16.40 ft)	**9** **N 1 G**
• 7.0 m (23.97 ft)	**9** **N 1 J**
• 9.0 m (29.53 ft)	**9** **N 1 L**
only for 7MF4983-...	
• 11.0 m (36.09 ft)	**9** **N 1 N**
• 12.0 m (39.37 ft)	**9** **N 1 P**
• 13.0 m (42.65 ft)	**9** **N 1 Q**
• 14.0 m (45.93 ft)	**9** **N 1 R**
• 15.0 m (49.21 ft)	**9** **N 1 S**

1) With 7MF802.-... and the measuring cells Q, S, T and U also order the vacuum-tight version.
2) Only for use in non-hazardous atmospheres.
3) For vacuum on request.
4) Oil- and grease- free cleaning to DIN 25410, level 2 and packaging included in the scope of delivery. Refer to "Further designs" C10 and E10.
5) Max. capillary length, see section "Technical description"

© Siemens 2020

Inline seals in sandwich design

Selection and Ordering data	Order code
Further designs	
Please add "**-Z**" to Article No. and specify Order code.	
Spark arrestor With spark arrestor for mounting on zone 0 (including documentation)	
• Pressure and absolute pressure	**A01**
• for differential pressure transmitters	**A02**
Remote seal nameplate Attached out of stainless steel, contains MLFB and order number of the remote seal	**B20**
Oil- and grease-free cleaned version Oil- and grease-free cleaned and packed version, not for oxygen application, only in conjunction with halocarbon oil fill fluid, certified by certificate acc. to EN 10204-2.2	**C10**
Quality Inspection Certificate (5-point characteristic curve test) according to IEC 60770-2	**C11**
Inspection certificate to EN 10204, section 3.1	**C12**
2.2 Certificate of FDA approval of fill oil Only in conjunction with "Food-grade oil" fill liquid (FDA listed)"	**C17**
Functional safety certificate ("SIL 2") to IEC 61508 (Only in conjunction with the Order code "C20" in the case of SITRANS P DSIII transmitter)	**C20**
Functional safety certificate ("SIL 2/3") to IEC 61508	**C23**
Certification acc. to NACE MR-0175 Includes inspection certificate 3.1 according to EN 10204 (only for wetted parts made of stainless steel 1.4404/316L and Hastelloy C276)	**D07**
Certification acc. to NACE MR-0103 Includes inspection certificate 3.1 according to EN 10204 (only for wetted parts made of stainless steel 1.4404/316L and Hastelloy C276)	**D08**
Oil- and grease-free cleaned version Oil- and grease-free cleaned and packed version, only for oxygen application, only inert fill fluid may be used. Max. temperature: 60 °C (140 °F), max. pressure 50 bar (725 psi), only in connection with halocarbon oil, certified by certificate acc. to EN 10204-2.2	**E10**
One-sided mounting on differential pressure transmitters (only for 7MF4980-...)	
on high-pressure side	**H10**
on low-pressure side	**H11**

Selection and Ordering data	Order code
Further designs	
Please add "**-Z**" to Article No. and specify Order code.	
PE protective tube over the spiral protective tube of the capillaries (color: white)	
1.0 m (3.28 ft)	**N20**
1.6 m (5.25 ft)	**N21**
2.0 m (6.56 ft)	**N22**
2.5 m (8.20 ft)	**N23**
3.0 m (9.84 ft)	**N24**
4.0 m (13.12 ft)	**N25**
5.0 m (16.40 ft)	**N26**
6.0 m (19.69 ft)	**N27**
7.0 m (22.97 ft)	**N28**
8.0 m (26.25 ft)	**N29**
9.0 m (29.53 ft)	**N30**
10.0 m (32.81 ft)	**N31**
only for 7MF4983-...	
11.0 m (36.09 ft)	**N32**
12.0 m (39.37 ft)	**N33**
13.0 m (42.65 ft)	**N34**
14.0 m (45.93 ft)	**N35**
15.0 m (49.21 ft)	**N36**
PTFE protective tube over the spiral protective tube of the capillaries (color: transparent)	
1.0 m (3.28 ft)	**N40**
1.6 m (5.25 ft)	**N41**
2.0 m (6.56 ft)	**N42**
2.5 m (8.20 ft)	**N43**
3.0 m (9.84 ft)	**N44**
4.0 m (13.12 ft)	**N45**
5.0 m (16.40 ft)	**N46**
6.0 m (19.69 ft)	**N47**
7.0 m (22.97 ft)	**N48**
8.0 m (26.25 ft)	**N49**
9.0 m (29.53 ft)	**N50**
10.0 m (32.81 ft)	**N51**
only for 7MF4983-...	
11.0 m (36.09 ft)	**N52**
12.0 m (39.37 ft)	**N53**
13.0 m (42.65 ft)	**N54**
14.0 m (45.93 ft)	**N55**
15.0 m (49.21 ft)	**N56**

© Siemens 2020

Selection and Ordering data	Order code
Further designs	
Please add "**-Z**" to Article No. and specify Order code.	
PVC protective tube over the spiral protective tube of the capillaries (color: black)	
1.0 m (3.28 ft)	**N60**
1.6 m (5.25 ft)	**N61**
2.0 m (6.56 ft)	**N62**
2.5 m (8.20 ft)	**N63**
3.0 m (9.84 ft)	**N64**
4.0 m (13.12 ft)	**N65**
5.0 m (16.40 ft)	**N66**
6.0 m (19.69 ft)	**N67**
7.0 m (22.97 ft)	**N68**
8.0 m (26.25 ft)	**N69**
9.0 m (29.53 ft)	**N70**
10.0 m (32.81 ft)	**N71**
only for 7MF4983-...	
11.0 m (36.09 ft)	**N72**
12.0 m (39.37 ft)	**N73**
13.0 m (42.65 ft)	**N74**
14.0 m (45.93 ft)	**N75**
15.0 m (49.21 ft)	**N76**
Cooling element max. medium temperature 300 °C, observe the maximum permissible media temperature of the filling liquid.	**R22**
Negative pressure service for use in low-pressure range for transmitters for	
• gauge and absolute pressure from the pressure series	**V01**
• differential pressure	**V03**
Note: Suffix "Y01" required with pressure transmitter	
Extended negative pressure service for use in low-pressure range for transmitters for	
• gauge and absolute pressure from the pressure series	**V51**
• differential pressure	**V53**
Note: Suffix "Y01" required with pressure transmitter	

© Siemens 2020

Dimensional drawings

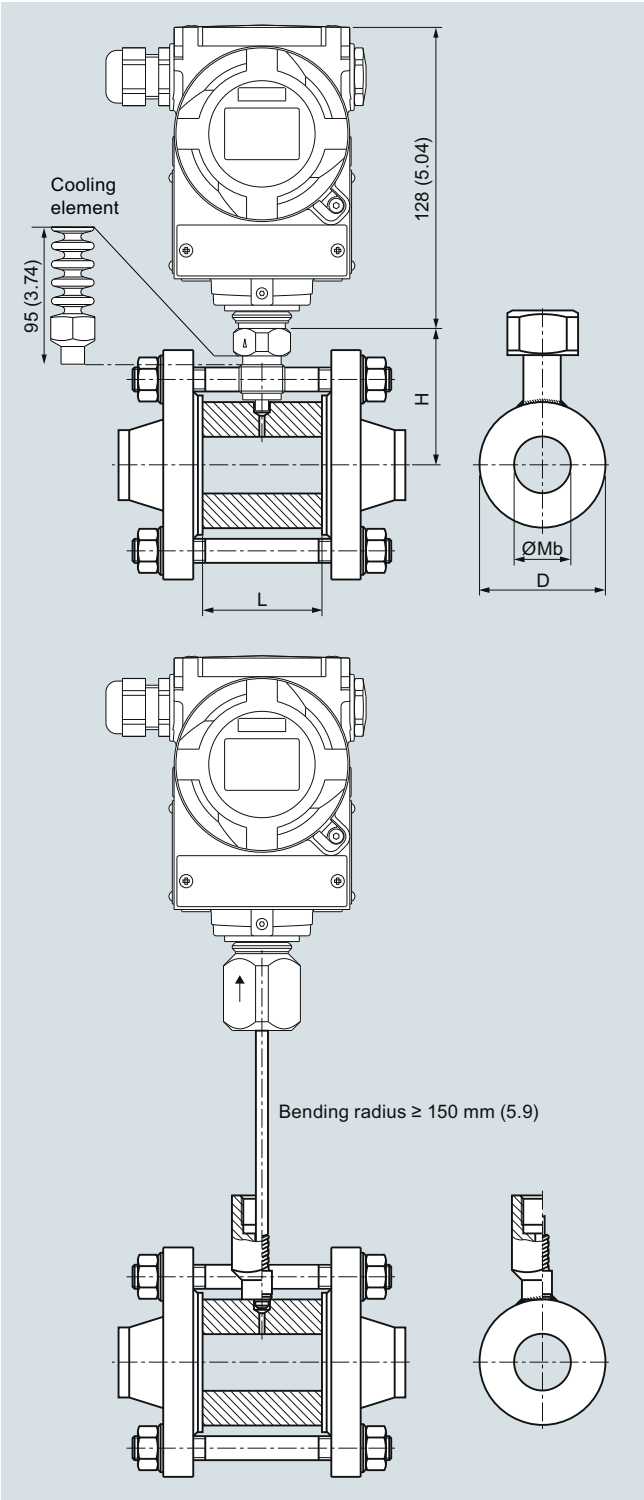

Inline seal for flange-mounting, connected to SITRANS P pressure transmitter, dimensions in mm (inch)

Connection to EN 1092-1

DN mm	PN bar	D mm	Mb mm	L mm	H mm
25	6 ... 100	63	28.5	60	78.5
40	6 ... 100	85	43	60	89.5
50	6 ... 100	95	54.5	60	92.5
80	6 ... 100	130	82.5	60	112
100	6 ... 100	150	107	60	122

Connection to ASME B16.5

DN (inch)	Class	D mm (inch)	Mb mm (inch)	L mm (inch)	H mm (inch)
1	150 ... 2500	63 (2.48)	28.5 (1.12)	60 (2.36)	78.5 (3.1)
1½	150 ... 2500	85 (3.35)	43 (1.69)	60 (2.36)	86 (3.4)
2	150 ... 2500	95 (3.74)	54.5 (2.15)	60 (2.36)	94.5 (3.72)
3	150 ... 2500	130 (5.12)	82.5 (3.25)	60 (2.36)	112 (4.4)
4	150 ... 2500	150 (5.9)	107 (4.21)	60 (2.36)	122 (4.8)

© Siemens 2020

Overview

Quick-release inline seals, to DIN 11851 with threaded socket

Quick-release inline seals, with clamp connection

Quick-release inline seals for pressure are available for the following SITRANS P pressure transmitter series:

- P300
- DS III with HART
- DS III with PROFIBUS PA
- DS III with FOUNDATION Fieldbus

Application

The quick-release inline seal is a special design for flowing and high-viscosity media. Because it is completely integrated in the process line, there are no turbulences, dead spaces or other obstacles in the flow direction. The medium flows almost unhindered through the inline seal and causes self-cleaning of the sample chamber. The inline seal is also piggable.

Design

The quick-release clamp is available in two versions:

- DIN 11851 with threaded socket
- Clamp connection

The inline seal is connected to the pressure transmitter either directly or by way of a capillary.

Function

The measured pressure is transferred from the diaphragm, mounted on the inner circumference of the inline seal, to the filling liquid and then passes through the capillary to the measuring chamber of the pressure transmitter. The interior of the inline seal and of the capillary, as well as the measuring chamber of the pressure transmitter, are filled gas-free by the filling liquid.

Note:

When operating in the low-pressure range, also during commissioning, it is recommended to use a vacuum-proof pressure transmitter (see Selection and Ordering data).

Technical specifications

Quick-release inline seals for gauge pressure		
Connection	Nominal diameter	Nominal pressure
• To DIN 11851 with threaded socket	DN 25	PN 40
	DN 40	PN 40
	DN 50	PN 25
	DN 65	PN 25
	DN 80	PN 25
	DN 100	PN 25
• Clamp connection	1½ inch	PN 40
	2 inch	PN 40
	2½ inch	PN 40
	3 inch	PN 40
Material		
• Main body	Stainless steel 1.4404/316L	
• Diaphragm	Stainless steel 1.4404/316L	
Capillary		
• Length	Max. 10 m (32.8 ft)	
• Internal diameter	2 mm (0.079 inch)	
• Minimum bending radius	150 mm (5.9 inch)	
• Sheath	Spiral protective tube made of stainless steel, mat. No. 1.4404/316L	
Filling liquid	• Food oil (FDA listed)	
Permissible ambient temperature	Dependent on the pressure transmitter and the filling liquid of the remote seal More information can be found in the technical data of the pressure transmitters and in the section "Technical data of filling liquid" in the Technical description to the remote seals	
Weight	Approx. 4 kg (approx. 8.82 lb)	
Certificate and approvals		
Classification according to pressure equipment directive (DGRL 2014/68/EU)	For gases of fluid group 1 and liquids of fluid group 1; complies with the requirements of article 4, paragraph 1 (appendix 1); assigned to category III, conformity evaluation module H by the TÜV Nord	
EHEDG	Complies with EHEDG recommendations	

© Siemens 2020

Selection and Ordering data		Article No. Ord. code
Quick-release inline seal ↗		7MF4950-
for SITRANS P pressure transmitters for pressure 7MF2033-...; 7MF403.-... and 7MF423.-... together with Order code "V01" (Negative pressure service) and 7MF802.-...[1]; must be ordered separately Filling liquid: Food oil (FDA listed) Material: Stainless steel 316L		■■A0■-■B■■■
↗ Click on the Article No. for the online configuration in the PIA Life Cycle Portal.		
Nominal diameter	**Nominal pressure**	
• Connection to DIN 11851 with screw necks		
- DN 25	PN 40	2B
- DN 40	PN 40	2D
- DN 50	PN 25	2E
- DN 65	PN 25	2F
- DN 80	PN 25	2G
- DN 100	PN 25	2H
• Clamp connection		
- 1½ inch	PN 16	4L
- 2 inch	PN 16	4M
- 2½ inch	PN 16	4N
- 3 inch	PN 10	4P
Other version Add Order codes and plain text: Process connection: ..., Nominal diameter: ...; Nominal pressure: ...		9Z H1Y
Filling liquid		
• Food oil (FDA listed)		7
Other version Add Order code and plain text: Filling liquid: ...		9 M1Y
Connection to transmitter		
• Direct		0
Through capillary, length:[2]		
• 1.0 m (3.28 ft)		2
• 1.6 m (5.25 ft)		3
• 2.5 m (8.20 ft)		4
• 4.0 m (13.1 ft)		5
• 6.0 m (19.7 ft)		6
• 8.0 m (26.25 ft)		7
• 10.0 m (32.8 ft)		8
Special lengths for capillaries		
• 2.0 m (6.56 ft)		9 N1C
• 3.0 m (9.84 ft)		9 N1E
• 5.0 m (16.40 ft)		9 N1G
• 7.0 m (23.97 ft)		9 N1J
• 9.0 m (29.53 ft)		9 N1L

1) With 7MF802.-... and the measuring cells Q, S, T and U also order the vacuum-tight version.
2) Max. capillary length, see section "Technical description"

Selection and Ordering data	Order code
Further designs	
Please add "**-Z**" to Article No. and specify Order code.	
Remote seal nameplate Attached out of stainless steel, contains MLFB and order number of the remote seal	**B20**
Quality Inspection Certificate (5-point characteristic curve test) according to IEC 60770-2	**C11**
Inspection certificate to EN 10204, section 3.1	**C12**
2.2 Certificate of FDA approval of fill oil Only in conjunction with "Food-grade oil" fill liquid (FDA listed)"	**C17**
Functional safety certificate ("SIL 2") to IEC 61508 (Only in conjunction with the Order code "C20" in the case of SITRANS P DSIII transmitter)	**C20**
Functional safety certificate ("SIL 2/3") to IEC 61508 (Only in conjunction with the Order code "C23" in the case of SITRANS P DSIII transmitter)	**C23**
One-sided mounting on differential pressure transmitters	
on high-pressure side	**H10**
on low-pressure side	**H11**
PE protective tube over the spiral protective tube of the capillaries (color: white)	
1.0 m (3.28 ft)	**N20**
1.6 m (5.25 ft)	**N21**
2.0 m (6.56 ft)	**N22**
2.5 m (8.20 ft)	**N23**
3.0 m (9.84 ft)	**N24**
4.0 m (13.12 ft)	**N25**
5.0 m (16.40 ft)	**N26**
6.0 m (19.69 ft)	**N27**
7.0 m (22.97 ft)	**N28**
8.0 m (26.25 ft)	**N29**
9.0 m (29.53 ft)	**N30**
10.0 m (32.81 ft)	**N31**
PTFE protective tube over the spiral protective tube of the capillaries (color: transparent)	
1.0 m (3.28 ft)	**N40**
1.6 m (5.25 ft)	**N41**
2.0 m (6.56 ft)	**N42**
2.5 m (8.20 ft)	**N43**
3.0 m (9.84 ft)	**N44**
4.0 m (13.12 ft)	**N45**
5.0 m (16.40 ft)	**N46**
6.0 m (19.69 ft)	**N47**
7.0 m (22.97 ft)	**N48**
8.0 m (26.25 ft)	**N49**
9.0 m (29.53 ft)	**N50**
10.0 m (32.81 ft)	**N51**

© Siemens 2020

Selection and Ordering data	Order code
Further designs	
Please add "**-Z**" to Article No. and specify Order code.	
PVC protective tube over the spiral protective tube of the capillaries (color: black)	
1.0 m (3.28 ft)	**N60**
1.6 m (5.25 ft)	**N61**
2.0 m (6.56 ft)	**N62**
2.5 m (8.20 ft)	**N63**
3.0 m (9.84 ft)	**N64**
4.0 m (13.12 ft)	**N65**
5.0 m (16.40 ft)	**N66**
6.0 m (19.69 ft)	**N67**
7.0 m (22.97 ft)	**N68**
8.0 m (26.25 ft)	**N69**
9.0 m (29.53 ft)	**N70**
10.0 m (32.81 ft)	**N71**
Cooling element max. medium temperature 300 °C, observe the maximum permissible media temperature of the filling liquid.	**R22**
Negative pressure services for use in low-pressure range for transmitters for • gauge and absolute pressure from the pressure series	**V01**
Extended negative pressure service for use in low-pressure range for transmitters for • gauge and absolute pressure from the pressure series	**V51**

© Siemens 2020

Dimensional drawings

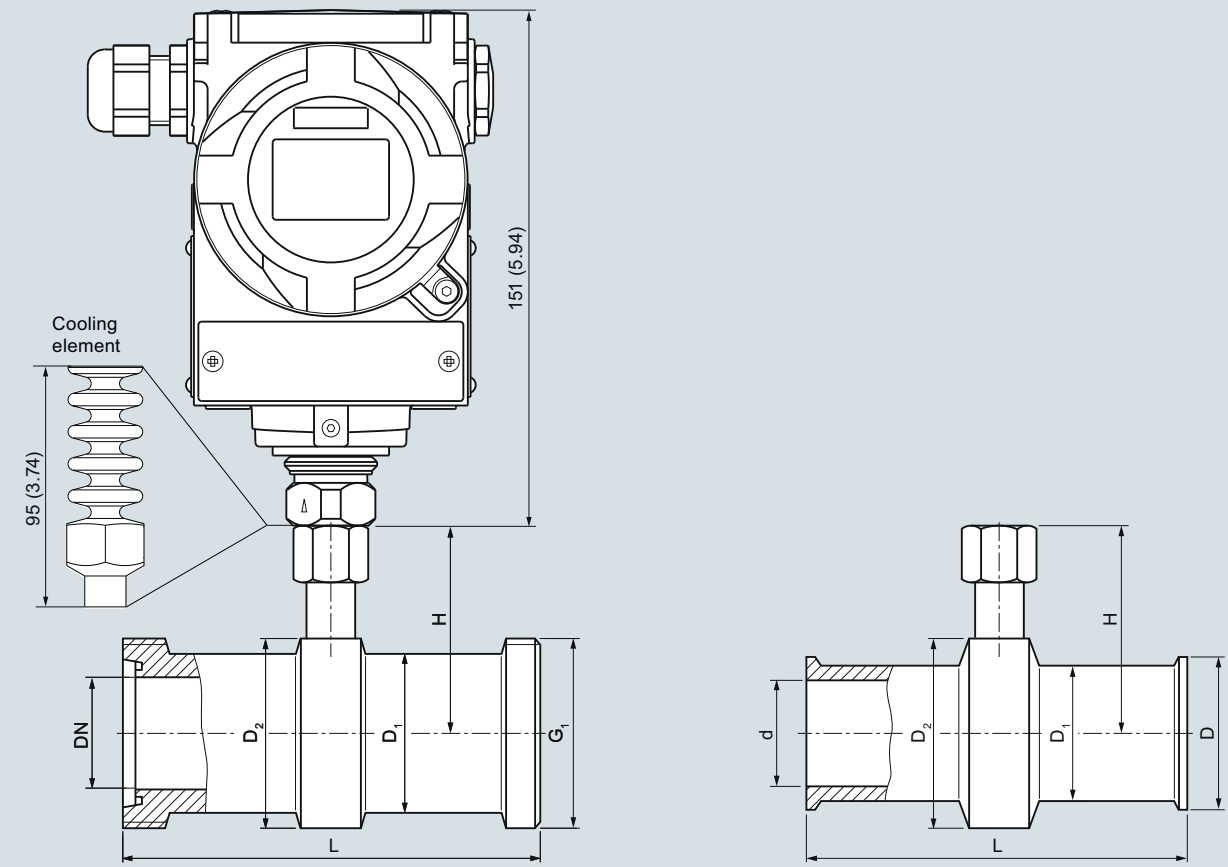

Mounted directly on SITRANS P transmitter for pressure

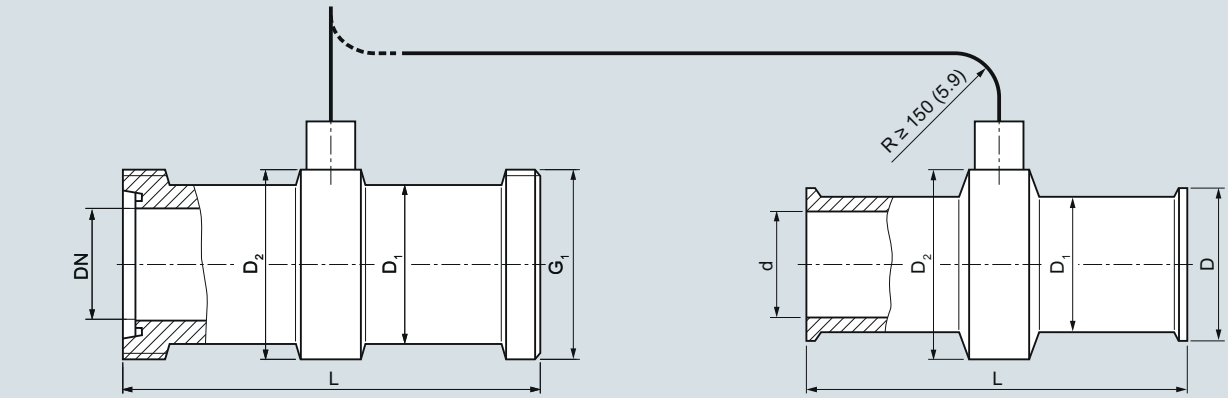

Mounted on SITRANS P transmitter for pressure or differential pressure and flow

Connection to DIN 11851 with screw necks

DN	Ø D_1	Ø D_2	H	L	G_1
25	38	52	68	128	Rd 52x1/6
40	55	65	74.5	160	Rd 65x1/6
50	68	78	81	170	Rd 78x1/6
65	85	95	89.5	182	Rd 95x1/6
80	110	110	97	182	Rd 110x1/4
100	130	130	107	182	Rd 110x1/4

Clamp connection for pipes to BS 4825/3 and o.D. tubes

d		Ø D_1		Ø D_2		H		L		D	
mm	(inch)	mm	(inch)	mm	(inch)	mm	(inch)	mm	(inch)	mm	(inch)
22.2	(1)	38	(1.5)	50	(1.97)	67	(2.64)	114	(4.49)	50.5	(1.98)
34.9	(1½)	43	(1.69)	65	(2.56)	74.5	(2.93)	146	(5.75)	50.5	(1.98)
47.6	(2)	56	(2.2)	75	(2.95)	79.5	(3.13)	156	(6.14)	64	(2.52)
60.3	(2½)	68	(2.68)	77	(3.03)	80.5	(3.17)	156	(6.14)	77.5	(3.05)
73.0	(3)	82	(3.23)	91	(3.58)	87.5	(3.44)	156	(6.14)	91	(3.58)

Quick-release inline seal, dimensions in mm (inch)

© Siemens 2020

Overview

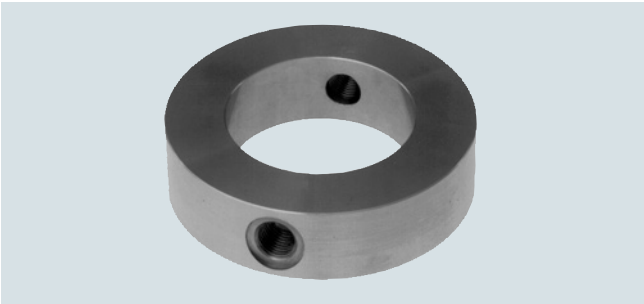

Flushing ring

Flushing rings are required for flange-mounted and sandwich-type remote seals (Article No. 7MF4900 ... 7MF4923) if the danger exists that the process conditions and the geometry of the connection could cause the medium to form deposits or blockages.

The flushing ring is clamped between the process flange and the remote seal.

Deposits can be flushed away from the diaphragm through the holes in the side, or the pressure volume can be vented. Different nominal diameters and forms permit adaptation to the respective process flange.

Process connection

For flanges to EN and ASME:
DN 50, 80, 100, 125; PN 16 ... 100 or
DN 2 inch, 3 inch, 4 inch, 5 inch; Class 150 ... 600

Standard design

Material: CrNi-Stahl, mat. No. 1.4404/316L
Sealing faces and flushing holes: See Selection and Ordering data

Design

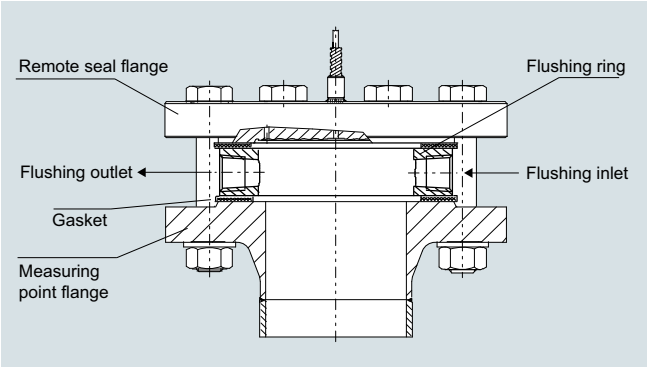

Installation example

Technical specifications

Flushing ring for remote seals of sandwich and flange design	
Nominal diameter	Nominal pressure
• DN 50	PN 16 ... PN 100
• DN 80	PN 16 ... PN 100
• DN 100	PN 16 ... PN 100
• DN 125	PN 16 ... PN 100
• 2 inch	Class 150 ... class 600
• 3 inch	Class 150 ... class 600
• 4 inch	Class 150 ... class 600
• 5 inch	Class 150 ... class 600
Sealing surface	
• To EN 1092-1	Form B1
	Form B2
	Form D/Form D
	Form C/Form C
	Form C/Form C
	Form E
	Form F
• To ASME B16.5	RF 125 ... 250 AA
	RFSF
	RJF ring groove
Flushing holes (2 off), female thread	• G¼
	• G½
	• ¼-18 NPT
	• ½-14 NPT
Material	Stainless steel 1.4404/316L

© Siemens 2020

Selection and Ordering data

		Article No.Ord. code
Flushing ring		7MF4925-
for remote seals 7MF4900 to 7MF4923		1 ■■■■ ■■■
↗ Click on the Article No. for the online configuration in the PIA Life Cycle Portal.		
Nom. diam.	**Nominal pressure**	
• DN 50	PN 16 ... PN 100	A
• DN 80	PN 16 ... PN 100	B
• DN 100	PN 16 ... PN 100	C
• DN 125	PN 16 ... PN 100	D
• 2 inch	Class 150 ... 600	G
• 3 inch	Class 150 ... 600	H
• 4 inch	Class 150 ... 600	J
• 5 inch	Class 150 ... 600	K
Only for RJF ring groove, 7MF4925-1*R....:		
• 2 inch	Class 150	N R
• 3 inch	Class 150	P R
• 4 inch	Class 150	Q R
• 5 inch	Class 150	R R
• 2 inch	Class 300 ... 600	U R
• 3 inch	Class 300 ... 600	V R
• 4 inch	Class 300 ... 600	W R
• 5 inch	Class 300 ... 600	X R
Other version Add Order code and text: Nominal diameter: ...; Nominal pressure: ...		Z J 1 Y
Sealing surface		
• EN 1092-1		
- Form B1		A
- Form B2		C
- Form C/Form C		D
- Form D/Form C		E
- Form D/Form D		F
- Form E		G
- Form F		H
• ASME B16.5		
- RF 125 ... 250 AA		M
- RFSF		Q
- RJF ring groove		R
Other version Add Order code and plain text: Sealing surface: ...		Z K 1 Y
Flushing holes (2 off)		
• Female thread G¼		1
• Female thread G½		2
• Female thread ¼-18 NPT		3
• Female thread ½-14 NPT		4
Material		
• Stainless steel 316L		0
Other version Add Order code and plain text: Material: ...		9 M 1 Y
Further designs Please add "**-Z**" to Article No. and specify Order code.		Order code
Inspection certificate to EN 10204, section 3.1		C12

Dimensional drawings

Connection according to EN 1092-1

Form B1 and form B2

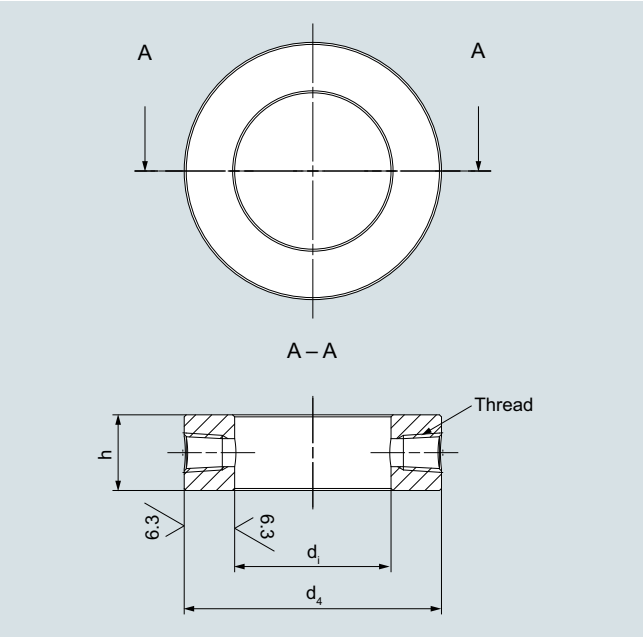

Flushing ring; sealing surface (EN 1092-1), form B1 and form B2

DN	PN	Thread	d_4	d_i	h	Weight
mm	bar		Ø in mm (inch)	Ø in mm (inch)	Ø in mm (inch)	kg (lb)
50	16 … 100	¼ NPT	102 (4.02)	62 (2.44)	30 (1.18)	1.24 (2.73)
80	16 … 100	¼ NPT	138 (5.43)	92 (3.62)	30 (1.18)	1.99 (4.39)
100	16 … 100	¼ NPT	162 (6.38)	92 (3.62)	30 (1.18)	3.35 (7.39)
125	16 … 100	¼ NPT	188 (7.40)	132 (5.2)	30 (1.18)	3.38 (7.45)
50	16 … 100	½ NPT	102 (4.02)	62 (2.44)	30 (1.18)	1.24 (2.73)
80	16 … 100	½ NPT	138 (5.43)	92 (3.62)	30 (1.18)	1.99 (4.39)
100	16 … 100	½ NPT	162 (6.38)	92 (3.62)	30 (1.18)	3.35 (7.39)
125	16 … 100	½ NPT	188 (7.40)	132 (5.2)	30 (1.18)	3.38 (7.45)

© Siemens 2020

Form D/form C

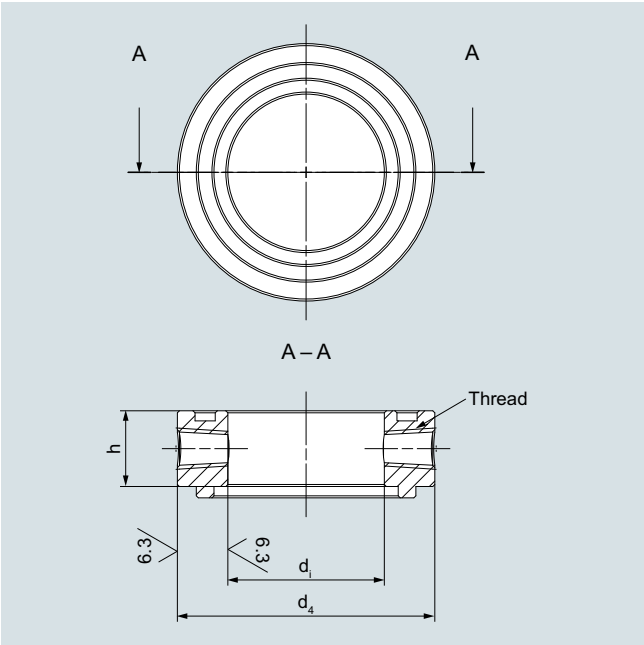

Flushing ring; sealing surface (EN 1092-1), form D/form C

DN	PN	Thread	d_4	d_i	h	Weight
mm	bar		Ø in mm (inch)	Ø in mm (inch)	Ø in mm (inch)	kg (lb)
50	16 … 100	¼ NPT	102 (4.02)	62 (2.44)	35.5 (1.40)	1.46 (3.22)
80	16 … 100	¼ NPT	138 (5.43)	92 (3.62)	35.5 (1.40)	2.36 (5.2)
100	16 … 100	¼ NPT	162 (6.38)	92 (3.62)	35.5 (1.40)	3.96 (8.73)
125	16 … 100	¼ NPT	188 (7.40)	132 (5.2)	35.5 (1.40)	4.00 (8.82)
50	16 … 100	½ NPT	102 (4.02)	62 (2.44)	40.5 (1.595)	1.67 (3.68)
80	16 … 100	½ NPT	138 (5.43)	92 (3.62)	40.5 (1.595)	2.69 (5.93)
100	16 … 100	½ NPT	162 (6.38)	92 (3.62)	40.5 (1.595)	4.52 (9.97)
125	16 … 100	½ NPT	188 (7.40)	132 (5.2)	40.5 (1.595)	4.56 (10.05)

Form D/form D

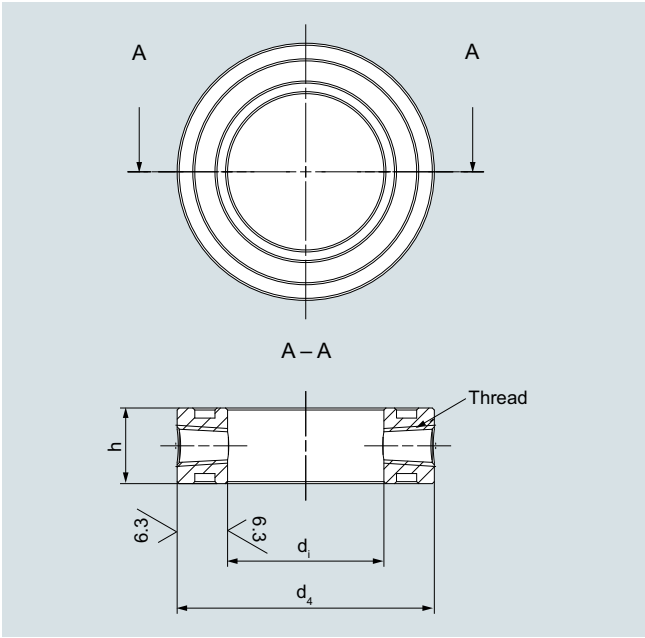

Flushing ring; sealing surface (EN 1092-1), form D/form D

DN	PN	Thread	d_4	d_i	h	Weight
mm	bar		Ø in mm (inch)	Ø in mm (inch)	Ø in mm (inch)	kg lb)
50	16 … 100	¼ NPT	102 (4.02)	62 (2.44)	40 (1.58)	1.65 (3.64)
80	16 … 100	¼ NPT	138 (5.43)	92 (3.62)	40 (1.58)	2.66 (5.86)
100	16 … 100	¼ NPT	162 (6.38)	92 (3.62)	40 (1.58)	4.47 (9.86)
125	16 … 100	¼ NPT	188 (7.40)	132 (5.2)	40 (1.58)	4.50 (9.92)
50	16 … 100	½ NPT	102 (4.02)	62 (2.44)	40 (1.58)	1.65 (3.64)
80	16 … 100	½ NPT	138 (5.43)	92 (3.62)	40 (1.58)	2.66 (5.86)
100	16 … 100	½ NPT	162 (6.38)	92 (3.62)	40 (1.58)	4.47 (9.86)
125	16 … 100	½ NPT	188 (7.40)	132 (5.2)	40 (1.58)	4.50 (9.92)

© Siemens 2020

Flushing rings for diaphragm seals

Form C/form C and form E

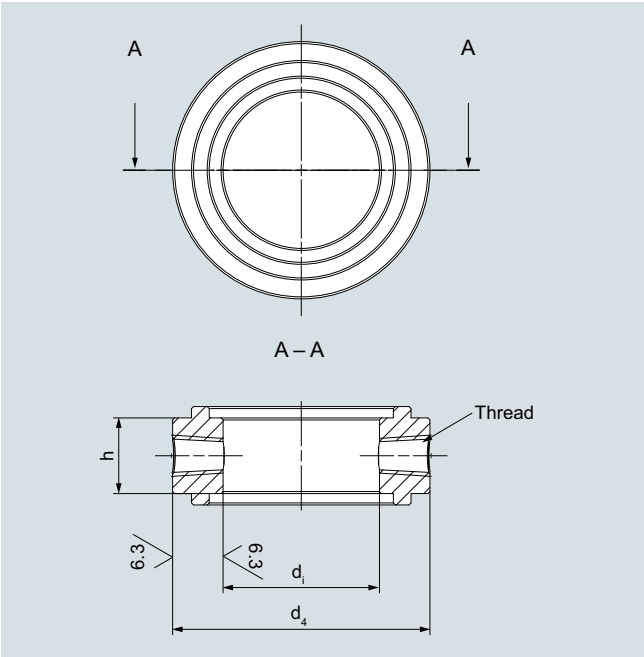

Flushing ring; sealing surface (EN 1092-1), form C/form C

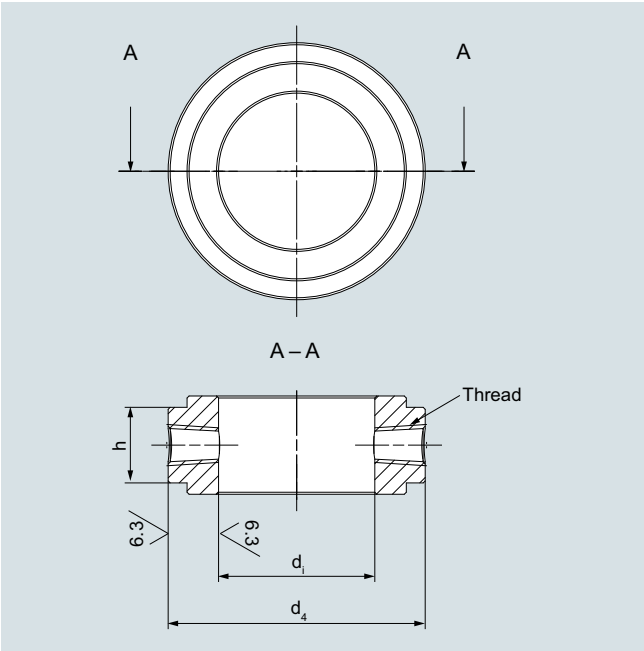

Flushing ring; sealing surface (EN 1092-1), form E

DN	PN	Thread	d_4	d_i	h	x	f3	Weight
mm	bar		Ø in mm (inch)	Ø in mm (inch)	Ø in mm (inch)	Ø in mm (inch)	Ø in mm (inch)	kg (lb)
50	16 … 100	¼ NPT	102 (4.02)	62 (2.44)	31 (1.22)	87 (3.43)	4.5 (0.18)	1.49 (3.28)
80	16 … 100	¼ NPT	138 (5.43)	92 (3.62)	31 (1.22)	120 (4.72)	4.5 (0.18)	2.40 (5.29)
100	16 … 100	¼ NPT	162 (6.38)	92 (3.62)	30 (1.18)	149 (5.87)	5 (0.2)	4.21 (9.28)
125	16 … 100	¼ NPT	188 (7.40)	132 (5.2)	30 (1.18)	175 (6.89)	5 (0.2)	4.21 (9.28)
50	16 … 100	½ NPT	102 (4.02)	62 (2.44)	31 (1.22)	87 (3.43)	4.5 (0.18)	1.49 (3.28)
80	16 … 100	½ NPT	138 (5.43)	92 (3.62)	31 (1.22)	120 (4.72)	4.5 (0.18)	2.40 (5.29)
100	16 … 100	½ NPT	162 (6.38)	92 (3.62)	30 (1.18)	149 (5.87)	5 (0.2)	4.21 (9.28)
125	16 … 100	½ NPT	188 (7.40)	132 (5.2)	30 (1.18)	175 (6.89)	5 (0.2)	3.38 (7.45)

Form F

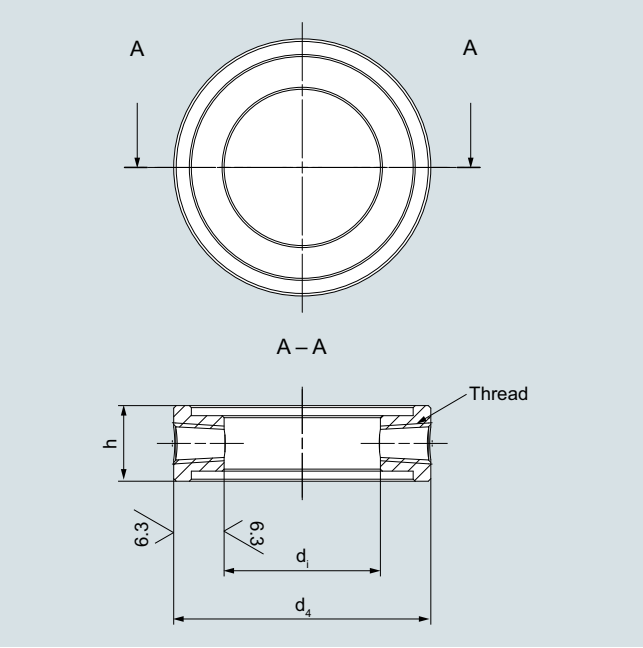

Flushing ring; sealing surface (EN 1092-1), form F

DN	PN	Thread	d_4	d_i	h	x	f3	Weight
mm	bar		Ø in mm (inch)	Ø in mm (inch)	Ø in mm (inch)	Ø in mm (inch)	Ø in mm (inch)	kg lb)
50	16 … 100	¼ NPT	102 (4.02)	62 (2.44)	35 (1.38)	88 (3.46)	4 (0.16)	1.25 (2.76)
80	16 … 100	¼ NPT	138 (5.43)	92 (3.62)	35 (1.38)	121 (4.76)	4 (0.16)	2.02 (4.45)
100	16 … 100	¼ NPT	162 (6.38)	92 (3.62)	35 (1.38)	150 (5.91)	4.5 (0.18)	3.11 (6.86)
125	16 … 100	¼ NPT	188 (7.40)	132 (5.2)	35 (1.38)	175 (6.89)	4.5 (0.18)	3.19 (7.03)
50	16 … 100	½ NPT	102 (4.02)	62 (2.44)	40 (1.58)	88 (3.46)	4 (0.16)	1.45 (3.2)
80	16 … 100	½ NPT	138 (5.43)	92 (3.62)	40 (1.58)	121 (4.76)	4 (0.16)	2.35 (5.18)
100	16 … 100	½ NPT	162 (6.38)	92 (3.62)	40 (1.58)	150 (5.91)	4.5 (0.18)	3.67 (8.09)
125	16 … 100	½ NPT	188 (7.40)	132 (5.2)	40 (1.58)	175 (6.89)	4.5 (0.18)	3.76 (8.29)

© Siemens 2020

Connection according to ASME B 16.5

RFSF and RF 125 ... 250 AA

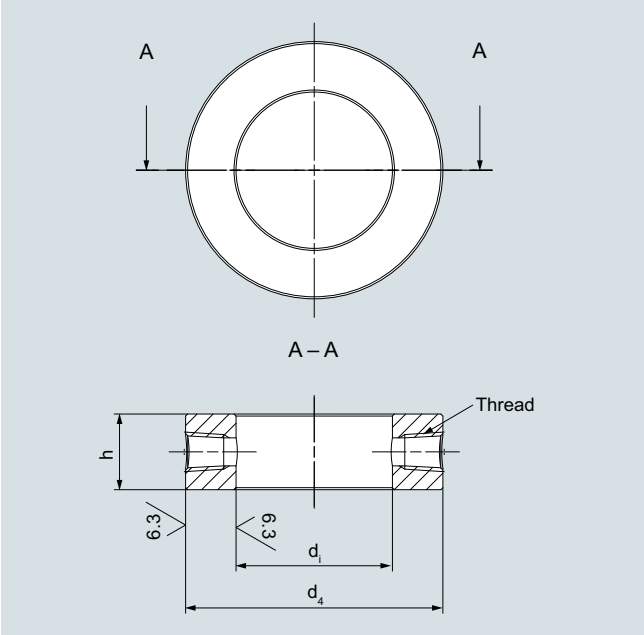

Flushing ring; sealing surface (ASME B 16.5), RFSF and RF 125 to 250 AA

DN	Class	Thread	d_4	d_i	h	Weight
inch			Ø in mm (inch)	Ø in mm (inch)	Ø in mm (inch)	kg lb)
2	150 … 600	¼ NPT	92 (3.62)	62 (2.44)	30 (1.18)	0.87 (1.92)
3	150 … 600	¼ NPT	127 (5)	92 (3.62)	30 (1.18)	1.44 (3.17)
4	150 … 600	¼ NPT	157 (6.18)	92 (3.62)	30 (1.18)	3.05 (6.72)
5	150 … 600	¼ NPT	186 (7.32)	141 (5.55)	30 (1.18)	2.77 (6.11)
2	150 … 600	½ NPT	92 (3.62)	62 (2.44)	30 (1.18)	0.87 (1.92)
3	150 … 600	½ NPT	127 (5)	92 (3.62)	30 (1.18)	1.44 (3.17)
4	150 … 600	½ NPT	157 (6.18)	92 (3.62)	30 (1.18)	3.05 (6.72)
5	150 … 600	½ NPT	186 (7.32)	141 (5.55)	30 (1.18)	2.77 (6.11)

RJF ring groove

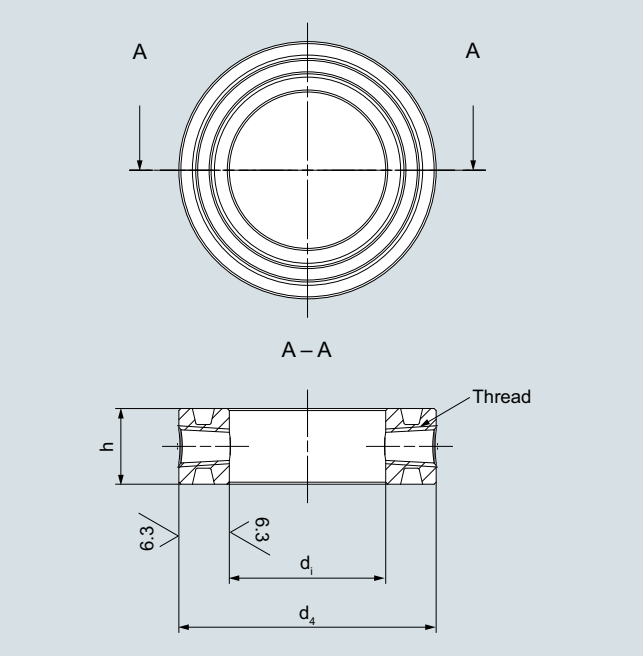

Flushing ring; sealing surface (ASME B 16.5), RJF ring groove

DN	Class	Thread	d_4	d_i	h	Weight
inch			Ø in mm (inch)	Ø in mm (inch)	Ø in mm (inch)	kg lb)
2	150	¼ NPT	102 (4.02)	62 (2.44)	40 (1.58)	1.65 (3.64)
3	150	¼ NPT	133 (5.24)	92 (3.62)	40 (1.58)	2.32 (5.12)
4	150	¼ NPT	171 (6.73)	92 (3.62)	40 (1.58)	5.22 (11.51)
5	150	¼ NPT	194 (7.64)	141 (5.55)	40 (1.58)	4.46 (9.83)
2	150	½ NPT	102 (4.02)	62 (2.44)	46 (1.81)	1.90 (4.19)
3	150	½ NPT	133 (5.24)	92 (3.62)	46 (1.81)	2.66 (5.86)
4	150	½ NPT	171 (6.73)	92 (3.62)	46 (1.81)	6.00 (13.23)
5	150	½ NPT	194 (7.64)	141 (5.55)	46 (1.81)	5.13 (11.31)
2	300 … 600	¼ NPT	108 (4.25)	62 (2.44)	40 (1.58)	1.96 (4.32)
3	300 … 600	¼ NPT	146 (5.75)	92 (3.62)	40 (1.58)	3.23 (7.12)
4	300 … 600	¼ NPT	175 (6.89)	92 (3.62)	40 (1.58)	5.57 (12.28)
5	300 … 600	¼ NPT	210 (8.27)	141 (5.55)	40 (1.58)	6.08 (13.4)
2	300 … 600	½ NPT	108 (4.25)	62 (2.44)	46 (1.81)	2.26 (4.98)
3	300 … 600	½ NPT	146 (5.75)	92 (3.62)	46 (1.81)	3.71 (8.18)
4	300 … 600	½ NPT	175 (6.89)	92 (3.62)	46 (1.81)	6.4 (14.11)
5	300 … 600	½ NPT	210 (8.27)	141 (5.55)	46 (1.81)	7 (15.43)

© Siemens 2020

Overview

This section shows examples of typical measuring setups for using SITRANS P pressure transmitters with and without remote seals.

Equations for calculating lower range value and upper range value are provided for each example.

Questionnaires are included to help you select the right combination of remote seal and pressure transmitter.

Installation

Remote seals of sandwich design are fitted between the connection flange of the measuring point and a dummy flange. Remote seals of flange design are fitted directly on the connection flange of the measuring point. The respective pressure rating of the dummy flange or the flanged remote seal must be observed.

The pressure transmitter should be installed below the connection flange (and below the lower connection flange in the case of differential pressure transmitters). This arrangement must be used in the low-pressure range.

When measuring at pressures above atmospheric, the pressure transmitter can also be installed above the connection flange.

The capillaries between the remote seal and the pressure transmitter should be as short as possible to obtain a good transmission response.

Offset of measuring range

If there is a difference in height between the two connection flanges when measuring with two remote seals, an additional differential pressure will result from the oil filling of the remote seal capillaries. This results in a measuring range offset which has to be taken into account when you set the pressure transmitter.

An offset in the measuring range also occurs when combining a remote seal with a transmitter if the remote seal is not installed at the same height as the transmitter.

Pressure transmitter output

If the level, separation layer or density increase in closed vessels, the differential pressure and hence the output signal of the pressure transmitter also increase.

For an inverted relationship between the differential pressure and the output signal, the lower range value and upper range value of the SITRANS P must be interchanged.

With open vessels, a rising pressure is usually assigned to an increasing level, separation layer or density.

Influence of ambient temperature

Temperature differences between the individual capillaries and between the individual remote seals should be avoided.

Temperature variations in the area of the measuring setup cause a change in volume of the filling liquid and hence measuring errors.

Notes

- For the separation layer measurement, the separation layer has to be positioned between the two spigots. Also you must make sure that the level in the container is always above the top spigot.
- When measuring density, make sure that the level of the medium remains constant. The level should be above the top spigot.

Possible combinations of pressure transmitters and remote seals

Type of installation	Pressure transmitters	Remote seals
A/B	7MF2033 7MF4033 7MF4034 7MF4035 7MF8023 7MF8024 7MF8025	7MF4900 7MF4910 7MF4920
C_1 and C_2	7MF4233 7MF4234 7MF4235	7MF4900 7MF4910 7MF4920 (negative pressure service in each case)
	7MF4333 7MF4334 7MF4335	7MF4901 7MF4921
D	7MF2433 7MF2434 7MF2435 7MF4433 7MF4434 7MF4435 7MF4533 7MF4534 7MF4535 7MF5403 7MF5413	7MF4903 7MF4923
E	7MF2433 7MF2434 7MF2435 7MF4433 7MF4434 7MF4435 7MF4533 7MF4534 7MF4535 7MF5403 7MF5413	7MF4913
G, H and J	7MF2433 7MF2434 7MF2435 7MF4433 7MF4434 7MF4435 7MF4533 7MF4534 7MF4535 7MF5403 7MF5413	7MF4903 7MF4923

© Siemens 2020

Dimensional drawings

Types of installation for pressure and level measurements (open vessels)

Installation type A

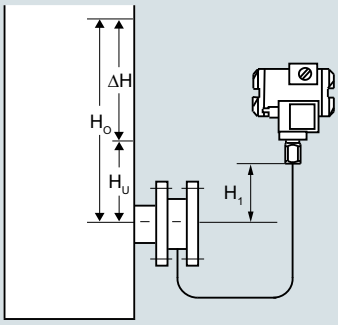

Pressure transmitter
above the measuring point

Installation type B

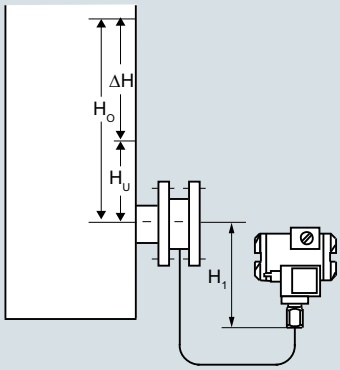

Pressure transmitter
below the measuring point

$H_1 \leq 7$ m (23 ft), with halocarbon oil as filling liquid only $H_1 \leq 4$ m (13.1 ft)

Installation type A

Lower range value: $p_{MA} = \rho_{FL} \cdot g \cdot H_U - \rho_{Oil} \cdot g \cdot H_1$

Upper range value: $p_{ME} = \rho_{FL} \cdot g \cdot H_O - \rho_{Oil} \cdot g \cdot H_1$

Installation type B

Lower range value: $p_{MA} = \rho_{FL} \cdot g \cdot H_U + \rho_{Oil} \cdot g \cdot H_1$

Upper range value: $p_{ME} = \rho_{FL} \cdot g \cdot H_O + \rho_{Oil} \cdot g \cdot H_1$

Legend

p_{MA}	Lower range value to be set
p_{ME}	Upper range value to be set
ρ_{FL}	Density of medium in vessel
ρ_{Oil}	Density of filling oil in the capillary to the remote seal
g	Local acceleration due to gravity
H_U	Lower range value
H_O	Upper range value
H_1	Distance between vessel flange and pressure trans.

Types of installation for absolute level measurements (closed vessels)

Installation type C_1

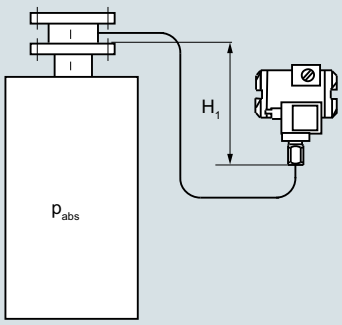

Installation type C_2

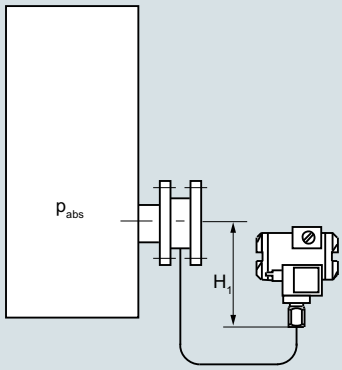

Pressure transmitter for absolute pressure always below the measuring point: $H_1 \geq 200$ mm (7.9 inch)

Installation type C_1 and C_2

Lower range value: $p_{MA} = p_{START} + \rho_{Oil} \cdot g \cdot H_1$

Upper range value: $p_{ME} = p_{END} + \rho_{Oil} \cdot g \cdot H_1$

Legend

p_{MA}	Lower range value to be set
p_{ME}	Upper range value to be set
p_{START}	Lower range value
p_{END}	Upper range value
ρ_{Oil}	Density of filling oil in the capillary to the remote seal
g	Local acceleration due to gravity
H_1	Distance between vessel flange and pressure trans.

Type of installation for differential pressure and flow measurements

Installation type D Filter monitoring

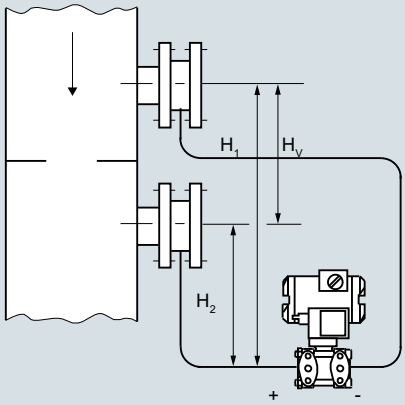

Installation type D

Lower range value: $p_{MA} = p_{START} - \rho_{Oil} \cdot g \cdot H_V$

Upper range value: $p_{ME} = p_{END} - \rho_{Oil} \cdot g \cdot H_V$

Legend

p_{MA}	Lower range value to be set
p_{ME}	Upper range value to be set
p_{START}	Lower range value
p_{END}	Upper range value
ρ_{Oil}	Density of filling oil in the capillary to the remote seal
g	Local acceleration due to gravity
H_V	Distance between the measuring points (spigots)

© Siemens 2020

Types of installation for level measurements (closed vessels)

Installation type E

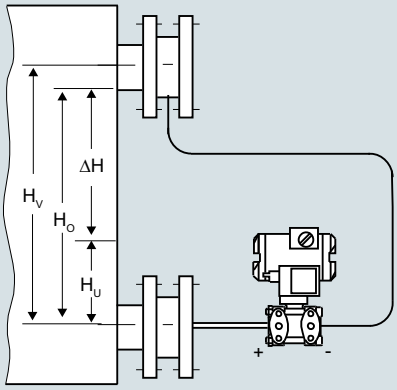

Installation type E

Lower range value: $p_{MA} = \rho_{FL} \cdot g \cdot H_U - \rho_{Oil} \cdot g \cdot H_V$

Upper range value: $p_{ME} = \rho_{FL} \cdot g \cdot H_O - \rho_{Oil} \cdot g \cdot H_V$

Legend

p_{MA}	Lower range value to be set
p_{ME}	Upper range value to be set
ρ_{FL}	Density of medium in vessel
ρ_{Oil}	Density of filling oil in the capillary to the remote seal
g	Local acceleration due to gravity
H_U	Lower range value
H_O	Upper range value
H_V	Distance between the measuring points (spigots)

Installation type G

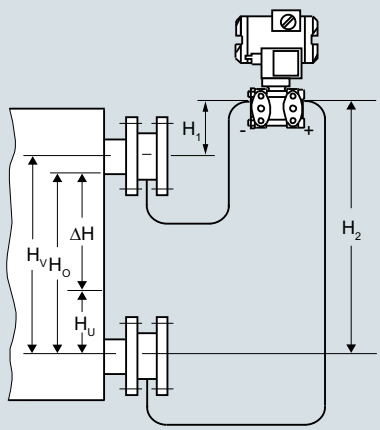

Pressure transmitter for differential pressure above the upper measuring point, no vacuum

$H_2 \leq 7$ m (23 ft), with halocarbon oil as filling liquid only $H_1 \leq 4$ m (13.1 ft)

Installation type H

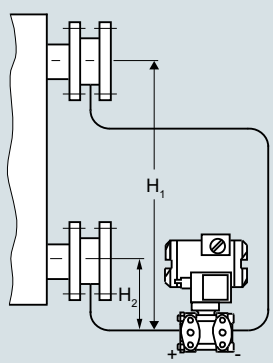

below the lower measuring point

Installation type for vacuum applications

Installation type J

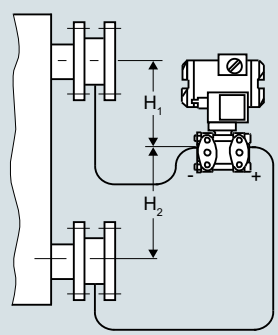

between the measuring points, no vacuum

$H_2 \leq 7$ m (23 ft), with halocarbon oil as filling liquid only $H_2 \leq 4$ m (13.1 ft)

Installation type G, H and J

Lower range value:
$p_{MA} = \rho_{FL} \cdot g \cdot H_U - \rho_{Oil} \cdot g \cdot H_V$

Upper range value:
$p_{ME} = \rho_{FL} \cdot g \cdot H_O - \rho_{Oil} \cdot g \cdot H_V$

Legend

p_{MA}	Lower range value to be set
p_{ME}	Upper range value to be set
ρ_{FL}	Density of medium in vessel
ρ_{Oil}	Density of filling oil in the capillary to the remote seal
g	Local acceleration due to gravity
H_U	Lower range value
H_O	Upper range value
H_V	Distance between the measuring points (spigots)

© Siemens 2020

Overview

Notes

- For the separation layer measurement, the separation layer has to be positioned between the two spigots.

  Also you must make sure that the level in the container is always above the top spigot.
- When measuring density, make sure that the level of the medium remains constant. The level should be above the top spigot

Dimensional drawings

Pressure transmitters for differential pressure, for flanging

Measuring setups for open containers

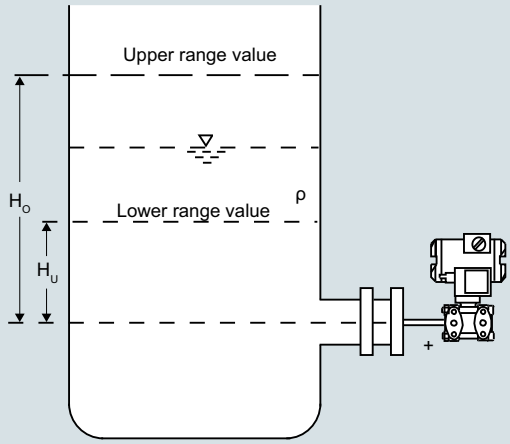

Level measurement

Lower range value: $p_{MA} = \rho \cdot g \cdot H_U$

Upper range value: $p_{ME} = \rho \cdot g \cdot H_O$

Legend

p_{MA}	Lower range value to be set
p_{ME}	Upper range value to be set
ρ	Density of medium in vessel
g	Local acceleration due to gravity
H_U	Lower range value
H_O	Upper range value

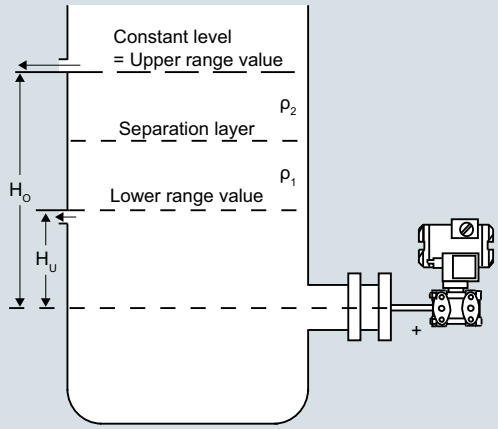

Separation layer measurement

Lower range value: $p_{MA} = g \cdot (H_U \cdot \rho_1 + (H_O - H_U) \cdot \rho_2)$

Upper range value: $p_{ME} = \rho_1 \cdot g \cdot H_O$

Legend

p_{MA}	Lower range value to be set
p_{ME}	Upper range value to be set
ρ_1	Density of heavier liquid
ρ_2	Density of lighter liquid
g	Local acceleration due to gravity
H_U	Lower range value
H_O	Upper range value

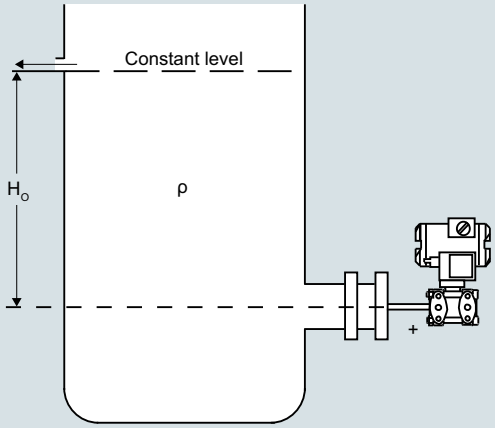

Density measurement

Lower range value: $p_{MA} = \rho_{MIN} \cdot g \cdot H_O$

Upper range value: $p_{ME} = \rho_{MAX} \cdot g \cdot H_O$

Legend

p_{MA}	Lower range value to be set
p_{ME}	Upper range value to be set
ρ_{MIN}	Minimum density of medium in vessel
ρ_{MAX}	Maximum density of medium in vessel
g	Local acceleration due to gravity
H_O	Upper range value in m

© Siemens 2020

Measuring setups for closed containers

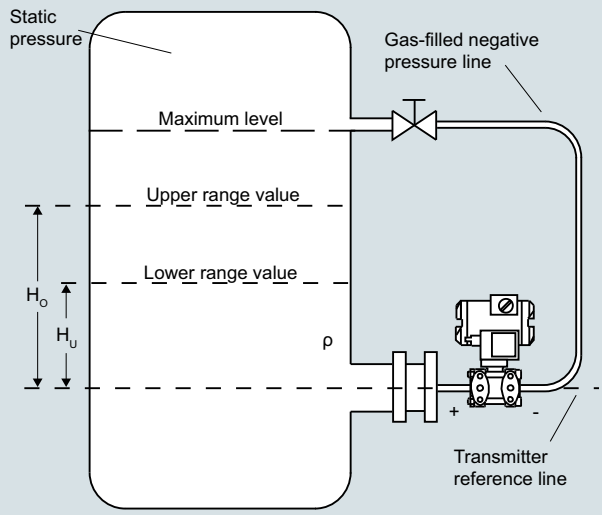

Level measurement, Version 1

Lower range value: $\Delta p_{MA} = \rho \cdot g \cdot H_U$

Upper range value: $\Delta pME = \rho \cdot g \cdot H_O$

Legend

Δp_{MA}	Lower range value to be set
Δp_{ME}	Upper range value to be set
ρ	Density of medium in vessel
g	Local acceleration due to gravity
H_U	Lower range value
H_O	Upper range value

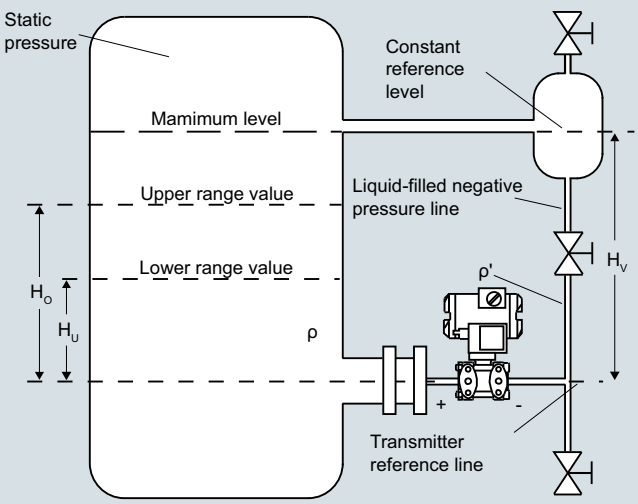

Level measurement, Version 2

Lower range value: $\Delta p_{MA} = g \cdot (H_U \cdot \rho - H_V \cdot \rho')$

Upper range value: $\Delta p_{ME} = g \cdot (H_O \cdot \rho - H_V \cdot \rho')$

Legend

Δp_{MA}	Lower range value to be set
Δp_{ME}	Upper range value to be set
ρ	Density of medium in vessel
ρ'	Density of liquid in the negative pressure line (corresponding to the temperature existing there)
g	Local acceleration due to gravity
H_U	Lower range value
H_O	Upper range value
H_V	Distance between the measuring points (spigots)

© Siemens 2020

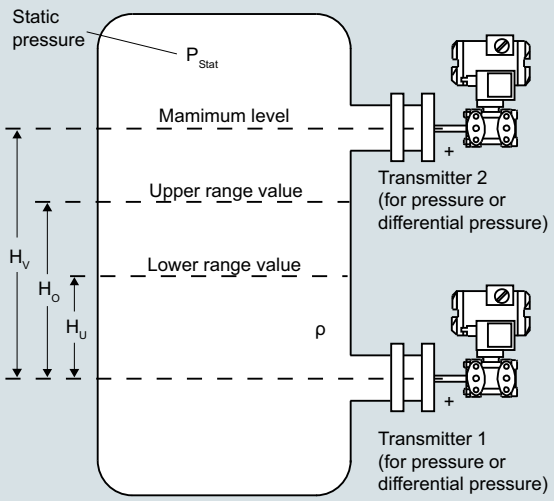

Level measurement, Version 3

Lower range value: $\Delta p_{MA} = \underbrace{P_{Stat} + \rho \cdot g \cdot H_U}_{\text{Transmitter 1}} - \underbrace{P_{Stat}}_{\text{Transmitter 2}}$

Upper range value: $\Delta p_{ME} = \underbrace{P_{Stat} + \rho \cdot g \cdot H_O}_{\text{Transmitter 1}} - \underbrace{P_{Stat}}_{\text{Transmitter 2}}$

Legend

Δp_{MA}	Lower range value to be set
Δp_{ME}	Upper range value to be set
ρ	Density of medium in vessel
g	Local acceleration due to gravity
H_U	Lower range value
H_O	Upper range value
H_V	Distance between the measuring points (spigots)

The pressure measuring range (≙ level) will be calculated by subtraction of measuring range of transmitter 1 minus measuring range of transmitter 2 in the process control system.

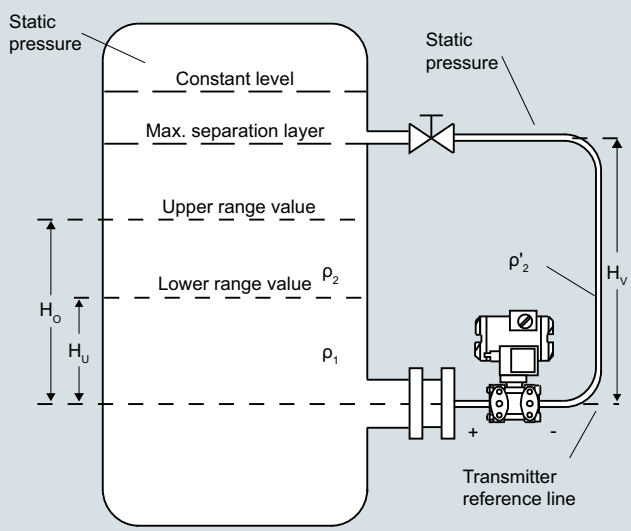

Separation layer measurement

Lower range value: $\Delta p_{MA} = g \cdot (H_U \cdot \rho_1 + (H_O - H_U) \cdot \rho_2 - H_V \cdot \rho'_2)$

Upper range value: $\Delta p_{ME} = g \cdot (H_O \cdot \rho_1 - H_V \cdot \rho'_2)$

Legend

Δp_{MA}	Lower range value to be set
Δp_{ME}	Upper range value to be set
ρ_1	Density of heavier liquid with separation layer in vessel
ρ_2	Density of lighter liquid with separation layer
ρ'_2	Density of liquid in the negative pressure line (corresponding to the temperature existing there)
g	Local acceleration due to gravity
H_U	Lower range value
H_O	Upper range value
H_V	Distance between the measuring points (spigots)

© Siemens 2020

Overview

All shut-off fittings can be secured onto walls, racks (72 mm grid) and vertical and horizontal pipes.

This offers the advantage when assembling a plant that the shut-off fittings can be secured first and the lines for the medium and differential pressure connected to them. It is then possible to check all connections for leaks and to blow out or flush the pipes in order to remove dirt (welding residues, shavings etc.).

The measuring instruments can be screwed onto the shut-off fittings right at the end when all piping has been completed.

If an instrument has to be removed for maintenance, the fittings and pipes remain as they are. It is only necessary to close the valves – the instrument can then be removed, and refitted following maintenance.

Classification according to pressure equipment directive (PED 2014/68/EU):

For gases of fluid group 1 and liquids of fluid group 1; compliance with requirements of article 4, paragraph 3 (sound engineering practice).

Norm IEC 61518/DIN EN 61518

The flange connection between transmitter and valve manifold was modified in the new standard IEC 61518/DIN EN 61518. The only connection thread approved for use in the process flanges of the pressure transmitter is $^{7}/_{16}$-20 UNF.

The valve manifolds for M12 screws, including the accessory sets, have therefore been deleted.

Inspection certificate to EN 10204-3.

If an inspection certificate according to EN 10204-3.1 is required for ordering valve manifolds or shut-off fittings, be aware that one certificate is sufficient for each valve type ordered. This means that you will only be charged for one certificate in the cost calculations.

Minimum/maximum operating temperatures
The maximum operating temperatures are given for each value or valve manifold.
The minimum operating temperatures depend on the material used for the valves or valve manifold.
They are as follows:

Material	Minimum operating temperature
Brass	-10 °C (-14 °F) according to EN 12516-4
Steel	-10 °C (-14 °F) according to AD200-W10
Stainless steel	-40 °C (-40 °F)

Pressure transmitters with shut-off fittings - mounting examples

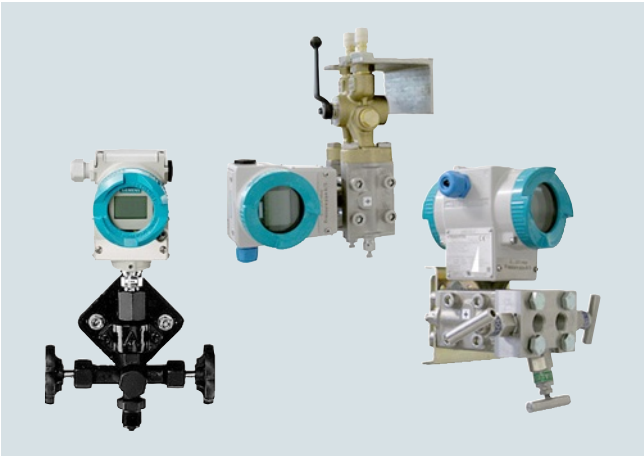

SITRANS P transmitter for gauge pressure with double shut-off valve, SITRANS P pressure transmitter with multiway cock or 3-spindle valve manifold

SITRANS P pressure transmitter for differential pressure, mounted in protective box (available on request)

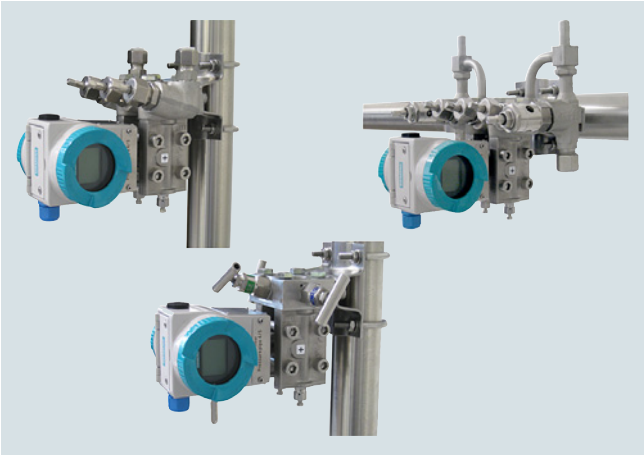

SITRANS P transmitter for differential pressure with 3-way valve manifold, 3-spindle valve manifold or valve manifold combination DN 5/DN 8

SITRANS P pressure transmitter mounted on valve combination "Monoflange" for direct connection to flanges (available on request)

© Siemens 2020

Selection of available shut-off valves

Transmitters	Shut-off valves for general applications	Page		Shut-off valves for special applications	Page	
Relative and absolute pressure transmitters with process connection G½" male thread e.g. • SITRANS P200 7MF1565-... • SITRANS P210 7MF1566-... • SITRANS P220 7MF1567-... • SITRANS P300 7MF802.-...0.-.... • SITRANS P 320/420 7MF030.-..D..-.... 7MF032.-..D..-.... 7MF040.-..D..-.... 7MF042.-..D..-.... • SITRANS P DS III series 7MF403.-...0.-.... and 7MF423.-...0.-.... • SITRANS P410 7MF243.-...0.-.... C41	Shut-off valves/double shut-off valves to DIN 16270, DIN 16271 and DIN 16272	1/473		Double shut-off valve DN 5 for crossover ½-NPT-F to G½ nipple connection 7MF9011-4EA	1/476	
				2-spindle valve manifold DN 5 for installation in protective boxes 7MF9412-1B	1/494	
Gauge and absolute pressure transmitters with process connection ½"-14 NPT female or male thread e.g. • SITRANS P200 7MF1565-... • SITRANS P210 7MF1566-... • SITRANS P220 7MF1567-... • SITRANS P300 7MF802.-...1.-.... • SITRANS P 320/420 7MF030.-..E..-.... 7MF030.-..F..-.... 7MF032.-..E..-.... 7MF032.-..F..-.... 7MF040.-..E..-.... 7MF040.-..F..-.... 7MF042.-..E..-.... 7MF042.-..F..-.... • SITRANS P DS III series 7MF403.-...1.-.... and 7MF423.-...1.-.... • SITRANS P410 7MF243.-...1.-.... C41	Double shut-off valve DN 5 7MF9011-4EA, -4FA, -4GA and -4KA	1/476	 7MF9011-4FA 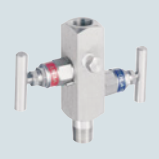 7MF9011-4KA	Double shut-off valve DN 5 for process connection ½-NPT 7MF9011-4HA	1/476	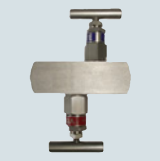
Absolute pressure transmitter with process connection to IEC 61518/DIN EN 61518 e.g. • SITRANS P 320/420 7MF033.-.....-.... 7MF043.-.....-.... • SITRANS P DS III series 7MF433.-...	2-spindle valve manifold DN 5 7MF9411-5A.	1/479	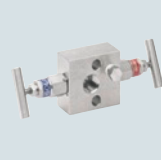	2-spindle valve manifold DN 5 for installation in protective boxes 7MF9412-1C.	1/494	

© Siemens 2020

Selection aid

Transmitters	Shut-off valves for general applications	Page		Shut-off valves for special applications	Page	
Differential pressure transmitter with process connection to IEC 61518/DIN EN 61518 e.g. • SITRANS P 320/420 7MF034.-.....-.... 7MF044.-.....-.... • SITRANS P DS III series 7MF443.-... and 7MF453.-... • SITRANS P410 7MF443.-... C41; 7MF453.-... C41 • SITRANS P500 7MF54..-...	For 3/5-spindle valve manifold DN 5 7MF9411-5B. and 7MF9411-5C.	1/479		3-way valve manifold DN 5, forged version 7MF9410-1..	1/484	
				5-way valve manifold, DN 5, forged version 7MF9410-3..	1/484	
	PN 100 multiway cocks 7MF9004-...	1/482		3-way valve manifolds DN 8, forged version 7MF9416-1.. and 7MF9416-2..	1/487	
				valve manifold combination DN 5/DN 8 for vapor measurement 7MF9416-6..	1/490	
				valve manifold combination DN 8 for vapor measurement 7MF9416-4..	1/492	
				3- and 5-spindle valve manifold for DN 5 for installation in protective boxes 7MF9412-1D. and 7MF9412-1E.	1/494	
				3- and 5-spindle valve manifold for vertical differential pressure lines 7MF9413-1..	1/498	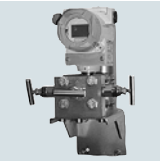
				Low-pressure multiway cock 7MF9004-4..	1/501	

© Siemens 2020

Overview

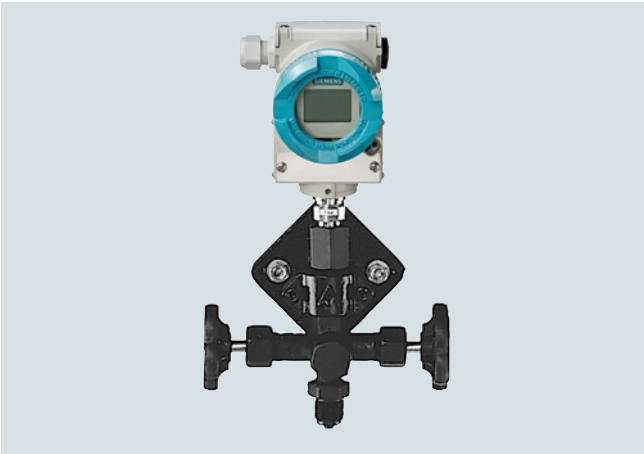

Transmitter for pressure with double shut-off valve 7MF9401-...

The shut-off valves for pressure gauges are used to shut off the line of the measured medium when dealing with aggressive and non-aggressive gases, vapors and liquids.

Design

A water trap must be connected upstream of the shut-off valve in the case of temperatures of the medium above 120 °C. The shut-off valves form B have a shaft with which they can be secured on an instrument bracket. An adapter is therefore not required to secure these valves. The vent/test connection can be shut off separately with the double shut-off valves DN 5. This permits checking of the zero on the pressure gauge. In addition, the characteristic of the pressure gauge can be checked using an external pressure source. The valve packing material is PTFE.

Selection and Ordering data		Article No.
Shut-off valves, form B, DIN 16270		
without test collar, connection shank, without certificate		
Material Valve enclosure	Maximum permissible working pressure	
CW614N (CuZn39Pb3) (mat. No. 2.0402)	250 bar (3626 psi)	**7MF9401-7AA**
P250GH (mat. No. 1.0460)	400 bar (5800 psi)	**7MF9401-7AB**
X 6 CrNiMoTi 17 12 2 (mat. No. 1.4571/316Ti)	400 bar (5800 psi)	**7MF9401-7AC**
Shut-off valves, form B, DIN 16271		
with test collar, connection shank, without certificate		
Material Valve enclosure	Maximum permissible working pressure	
CW614N (CuZn39Pb3) (mat. No. 2.0402)	250 bar (3626 psi)	**7MF9401-7BA**
P250GH (mat. No. 1.0460)	400 bar (5800 psi)	**7MF9401-7BB**
X 6 CrNiMoTi 17 12 2 (mat. No. 1.4571/316Ti)	400 bar (5800 psi)	**7MF9401-7BC**

Selection and Ordering data		Article No.
Shut-off valves, form B, DIN 16270		
without test collar, pipe union with ferrule 12 S DIN EN ISO 8434-1, without certificate		
Material Valve enclosure	Maximum permissible working pressure	
P250GH (mat. No. 1.0460)	400 bar (5800 psi)	**7MF9401-8AB**
X 6 CrNiMoTi 17 12 2 (mat. No. 1.4571/316Ti)	400 bar (5800 psi)	**7MF9401-8AC**
Shut-off valves, form B, DIN 16271		
with test collar, pipe union with ferrule 12 S DIN EN ISO 8434-1, without certificate		
Material Valve enclosure	Maximum permissible working pressure	
P250GH (mat. No. 1.0460)	400 bar (5800 psi)	**7MF9401-8BB**
X 6 CrNiMoTi 17 12 2 (mat. No. 1.4571/316Ti)	400 bar (5800 psi)	**7MF9401-8BC**
Double shut-off valves, form B, DIN 16272		
with test collar, connection shank, without certificate		
Material Valve enclosure	Maximum permissible working pressure	
CW614N (CuZn39Pb3) (mat. No. 2.0402)	250 bar (3626 psi)	**7MF9401-7DA**
P250GH (mat. No. 1.0460)	400 bar (5800 psi)	**7MF9401-7DB**
X 6 CrNiMoTi 17 12 2 (mat. No. 1.4571/316Ti)	400 bar (5800 psi)	**7MF9401-7DC**
Double shut-off valves, form B, DIN 16272		
with test collar, pipe union with ferrule 12 S DIN EN ISO 8434-1, without certificate		
Material Valve enclosure	Maximum permissible working pressure	
P250GH (mat. No. 1.0460)	400 bar (5800 psi)	**7MF9401-8DB**
X 6 CrNiMoTi 17 12 2 (mat. No. 1.4571/316Ti)	400 bar (5800 psi)	**7MF9401-8DC**
Accessories		
Factory certificate according to EN 10204–2.2		**7MF9000-8AB**
Material inspection certificate EN 10204-3.1		**7MF9000-8AD**

Instrument bracket, see page 1/478.

© Siemens 2020

Shut-off valves to DIN 16270, DIN 16271 and DIN 16272

Characteristic curves

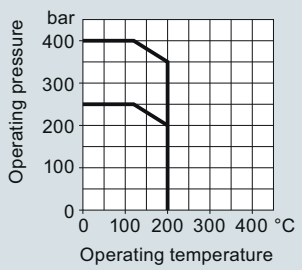

Steel or stainless steel version
400 bar (5800 psi) at 120 °C (248 °F)
350 bar (5076 psi) at 200 °C (392 °F)

Brass version
250 bar (3626 psi) at 120 °C (248 °F)
200 bar (2901 psi) at 200 °C (392 °F)

Permissible operating pressure as a function of the permissible operating temperature

Dimensional drawings

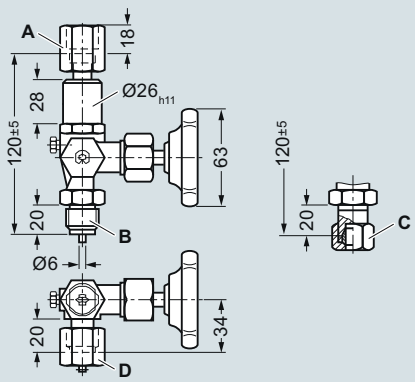

A Connection on device side: to DIN 16284, G½, SW 27
B Connection on measurement side: connection shank to DIN EN 837-1, G½
C Connection on measurement side: pipe union with ferrule 12 mm diameter, S series, to DIN EN ISO 8434-1
D Connection on test collar (with sealing cap): thread M20 x 1,5

Shut-off valve, form B, dimension drawing, dimensions in mm

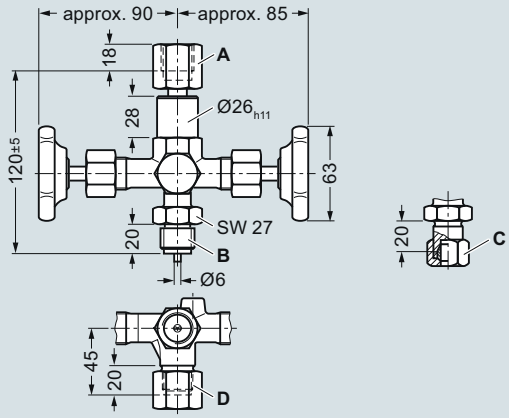

A Connection on device side: to DIN 16284, G½, SW 27
B Connection on measurement side: connection shank to DIN EN 837-1, G½
C Connection on measurement side: pipe union with ferrule 12 mm diameter, S series, to DIN EN ISO 8434-1
D Connection on test collar (with sealing cap): thread M20 x 1,5

Double shut-off valve, form B, dimension drawing, dimensions in mm

© Siemens 2020

Overview

P300 pressure transmitter with shut-off valve and angle adapter

The angle adapter enables pressure transmitters with top displays to be read from the front.

Selection and Ordering data	Article No.
Angle adapters	**7MF9401-7WA**
Material: X 12 CrNiMoTi 17 12 2 (mat. No. 1.45714/316Ti), max. permissible operating pressure 400 bar (5800 psi)	
Accessories	
Factory certificate according to EN 10204–2.2	**7MF9000-8AB**
Material inspection certificate EN 10204-3.1	**7MF9000-8AD**

Characteristic curves

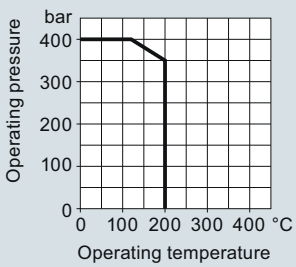

Stainless steel version
400 bar (5800 psi) at 120 °C (248 °F)
350 bar (5076 psi) at 200 °C (392 °F)

Permissible operating overpressure as a function of the permissible operating temperature

Dimensional drawings

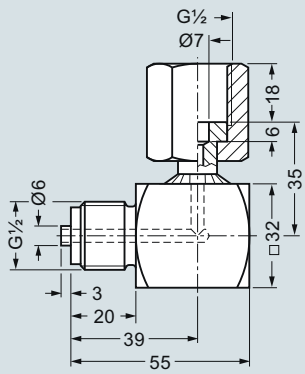

Angle adapter, dimensions in mm

© Siemens 2020

Overview

The double shut-off valves DN 5 are suitable for pressure gauges and pressure transmitters and available in 5 versions:

- Sleeve-nipple
- Sleeve-sleeve
- Sleeve-collar
- Collar-collar
- Collar-sleeve

The valve packing material is PTFE.

Characteristic curves

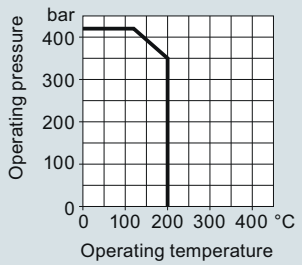

420 bar (6092 psi) at 120 °C (248 °F)
350 bar (5076 psi) at 200 °C (392 °F)

Permissible operating pressure as a function of the permissible operating temperature

Selection and Ordering data	Article No.
Shut-off valve DN 5	
Material: X 6 CrNiMoTi 17 13 2 (W.-Nr. 1.4404/316L), max. permissible operating overpressure 420 bar (6092 psi)	
• Sleeve-sleeve	**7MF9011-3HA**
Double shut-off valves DN 5	
Material: X 6 CrNiMoTi 17 13 2 (mat. No. 1.4404/316L), max. permissible working pressure 420 bar (6092 psi);	
• Sleeve-nipple connection	**7MF9011-4EA**
• Sleeve-sleeve	**7MF9011-4HA**
• Sleeve-collar	**7MF9011-4FA**
• Collar-collar	**7MF9011-4GA**
• Collar-sleeve	**7MF9011-4KA**
Accessories	
Factory certificate according to EN 10204–2.2	**7MF9000-8AB**
Material inspection certificate EN 10204-3.1	**7MF9000-8AD**
Further designs	Order code
Add "**-Z**" to Article No. and specify Order code.	
Oil- and grease-free cleaning for oxygen applications, max. pressure PN 100 (1450 psi) and max. temperature 60 °C (140 °F)	**S12**
NACE MR-0175-certified	**D07**
incl. inspection certificate 3.1 to EN 10204	

Dimensional drawings

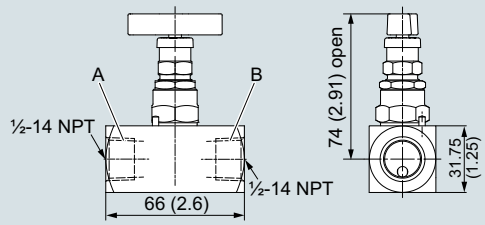

A Connection on device side: ½-14 NPT
B Connection on measurement side: ½-14 NPT

Shut-off valve DN 5 (sleeve-sleeve) 7MF9011-3HA, dimensions in mm (inch)

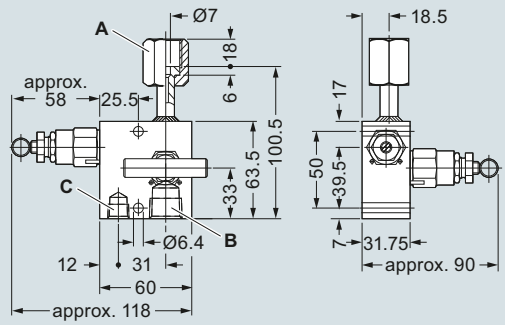

A Connection on device side: nipple to DIN 16284, G½, SW 27
B Connection on measurement side: ½-14 NPT
C Vent and test connection: ¼-18 NPT

Double shut-off valve DN 5 (sleeve-nipple) 7MF9011-4EA, dimensions in mm

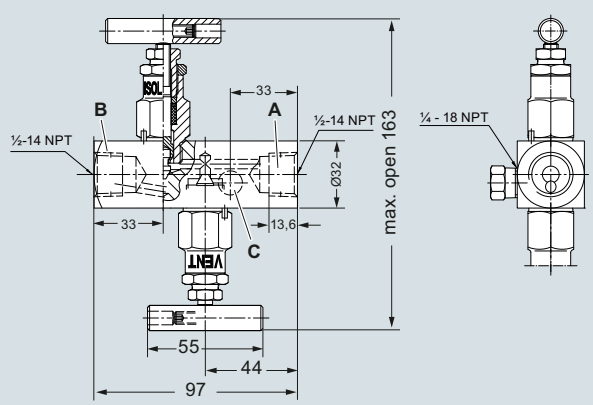

A Connection on device side : ½-14 NPT
B Connection on measurement side: ½-14 NPT
C Vent and test connection: ¼-18 NPT

Double shut-off valve DN 5 (sleeve-sleeve) 7MF9011-4HA, dimensions in mm

© Siemens 2020

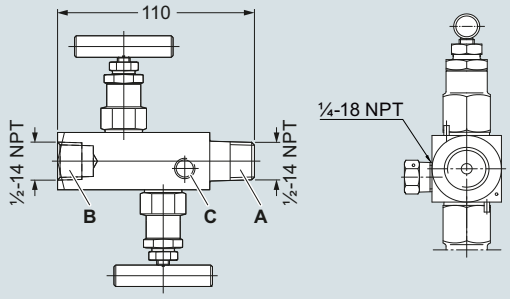

A Connection on device side : ½-14 NPT
B Connection on measurement side: ½-14 NPT
C Vent and test connection: ¼-18 NPT

Double shut-off valve DN 5 (sleeve-collar) 7MF9011-4FA, dimensions in mm

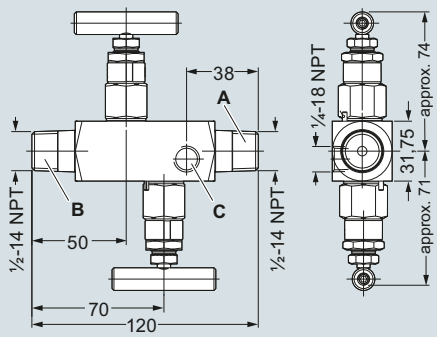

A Connection on device side : ½-14 NPT
B Connection on measurement side: ½-14 NPT
C Vent and test connection: ¼-18 NPT

Double shut-off valve DN 5 (collar-collar) 7MF9011-4GA, dimensions in mm

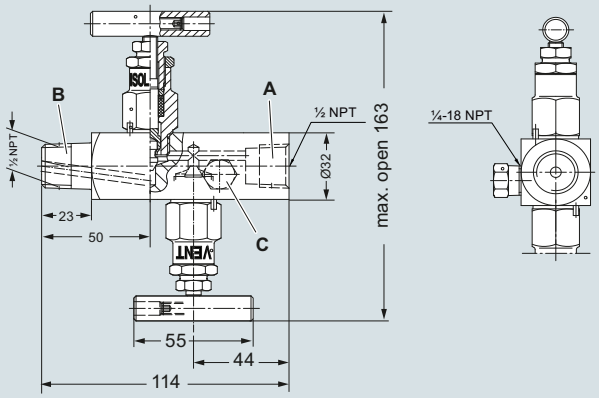

A Connection on device side : ½-14 NPT
B Connection on measurement side: ½-14 NPT
C Vent and test connection: ¼-18 NPT

Double shut-off valve DN 5 (collar-sleeve) 7MF9011-4KA, dimensions in mm

© Siemens 2020

Accessories for shut-off valves/double shut-off valves

Overview

The mounting set is suitable for the double shut-off valves 7MF9011-4.A and for wall, rack and pipe mounting.

Selection and Ordering data	Article No.
Mounting set for shut-off valves	
• 7MF9011-4DA and -4EA	**7MF9011-8AB**
made of stainless steel, scope of delivery: 1x mounting bracket, 2x hexagon screws M6x40, 1x mounting clip, 2x washers 8.4 to DIN 125; 2x hexagon nuts 8.4 to DIN EN 24032	
• 7MF9011-4FA, -4GA, 4HA, -4KA and -3HA	**7MF9011-8AC**
made of stainless steel, scope of delivery: 1x mounting bracket, 2x hexagon screws M6x10, 1x mounting clip, 2x washers 8.4 to DIN 125; 2x hexagon nuts 8.4 to DIN EN 24032	

Dimensional drawings

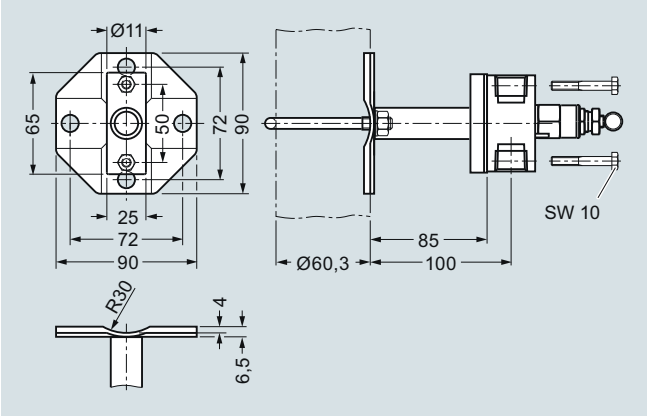

Mounting bracket (7MF9011-8AB) for shut-off valves 7MF9011-4DA and 7MF9011-4EA for wall, rack or pipe mounting, dimensions in mm

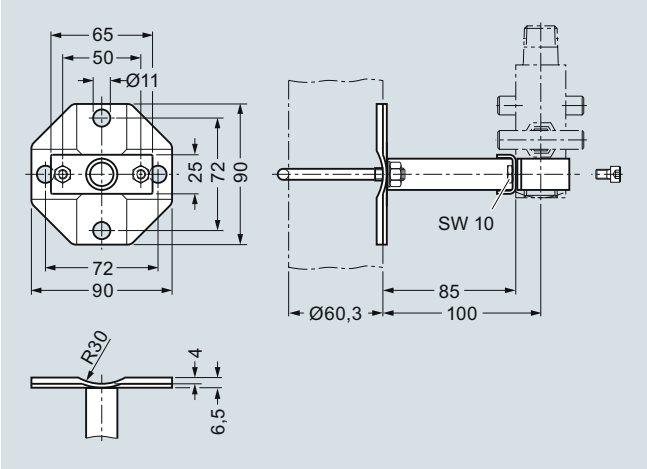

Mounting bracket (7MF9011-8AC) for shut-off valves 7MF9011-4FA and 7MF9011-4GA for wall, rack or pipe mounting, dimensions in mm

Overview

The instrument brackets are needed to mount the following units:

- Pressure gauges with threaded connection at the bottom
- Shut-off valves to DIN 16270, DIN 16271 and DIN 16272 (7MF9401-7.. and 7MF9401-8..)

Selection and Ordering data	Article No.
Instrument bracket, form H, DIN 16281	
(e.g. for gauge) made of aluminium alloy, painted black, **for wall mounting**, screw-type bracket cover	
• Projection length 60 mm	**M56340-A0046**
• Projection length 100 mm	**M56340-A0047**
Instrument bracket, form A, DIN 16281	
(e.g. for transmitter) made of annealed cast iron, galvanized and primed **for mounting on a wall** or rack or or on a sectional rail (horizontal/vertical); Screw-type bracket cover	**M56340-A0053**
Instrument bracket, form A, DIN 16281	
(e.g. for transmitter) made of annealed cast iron, galvanized and primed with pipe clamp for **wall and pipe mounting** (horizotal/vertical) Screw-type bracket cover	**M56340-A0079**

Dimensional drawings

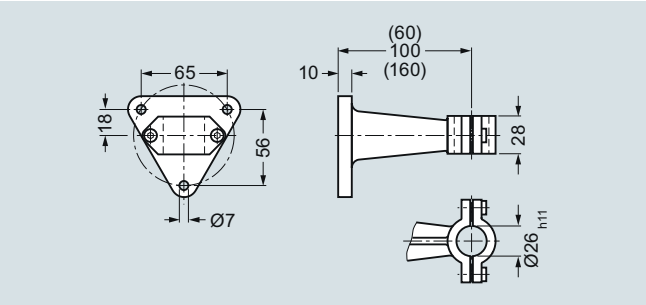

Instrument bracket form H, for wall mounting, M56340-A0046/-A0047, dimensions in mm

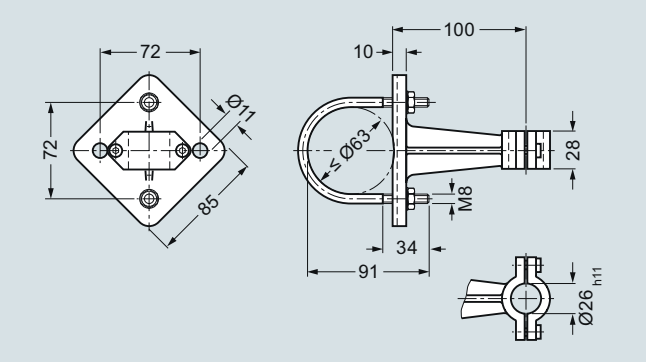

Instrument bracket form A, wall or pipe mounting, M56340-A0053/-A0079, dimensions in mm

© Siemens 2020

Overview

The 2-spindle, 3-spindle and 5-spindle valve manifolds 7MF9411-5.. are for pressure transmitters for absolute pressure or differential pressure.

The valve manifolds are used to shut off the differential pressure lines and to check the pressure transmitter zero.

The 2-spindle and the 5-spindle valve manifold enable in addition venting on the transmitter side and checking of the pressure transmitter characteristic.

Benefits

- Max. working pressure 420 bar (6092 psi)
- Each available in version for oxygen

Application

The spindle valve manifolds DN 5 are designed for liquids and gases.

Each is available in a version for oxygen on request.

Design

All versions of the valve manifolds have a process connection ½-14 NPT. The connection for the pressure transmitter is always designed as a flange connection to IEC 61518/DIN EN 61518, form B . The 2-spindle and the 5-spindle valve manifold have in addition a vent and test connection ¼-18 NPT.

The valves have an external spindle thread.

Materials used

Component	Material	Mat. No.
Enclosure	X 2 CrNiMo 17 13 2	1.4404/316L
Cones	X 6 CrNiMoTi 17 12 2	1.4571/316Ti
Spindles	X 2 CrNiMo 18 10	1.4404/316L
Head parts	X 5 CrNiMo 18 10	1.4401/316
Packings	PTFE	-

Function

Functions of all valve manifolds:

- Shutting off the differential pressure lines
- Checking the pressure transmitter zero

Additional functions of the 2-spindle and 5-spindle valve manifolds through the vent and test connection:

- Venting on the transmitter side
- Checking the pressure transmitter characteristic

Selection and Ordering data	Article No.
Valve manifolds DN 5 ↗	**7MF9411 - ■■ A**
↗ Click on the Article No. for the online configuration in the PIA Life Cycle Portal.	
for liquids and gases, for flanging to pressure transmitters for absolute and differential pressure, max. working pressure 420 bar (order accessory set with Order code), without certificate	
• 2-spindle valve manifold	**5 A**
• 3-spindle valve manifold	**5 B**
• 5-spindle valve manifold	**5 C**
Accessories	
Factory certificate according to EN 10204–2.2	**7MF9000-8AB**
Material inspection certificate EN 10204-3.1	**7MF9000-8AD**

Selection and Ordering data	Order code	Article No.
Further designs[1)]		
Please add "**-Z**" to Article No. and specify Order code.		
Accessory set to EN		
(connection between valve manifold and pressure transmitter)		
for valve manifold 7MF9411-5A.		
2x screws $^{7}/_{16}$-20 UNF x 1¾ inch to ASME B18.2.1; chromized steel 1x gasket made of PTFE, max. permissible 420 bar (6092 psi), 80 °C (176 °F)	**K35**	**7MF9411-7DB**
2x screws $^{7}/_{16}$-20 UNF x 1¾ inch to ASME B18.2.1; **stainless steel** 1x gasket made of PTFE, max. permissible 420 bar (6092 psi), 80 °C (176 °F)	**K45**	**7MF9411-7DC**
for valve manifolds 7MF9411-5B. and -5C.		
4x screws $^{7}/_{16}$-20 UNF x 1¾ inch to ASME B18.2.1; chromized steel 2x flat gaskets made of PTFE, max. permissible 420 bar (6092 psi), 80 °C (176 °F)	**K36**	**7MF9411-5DB**
4x screws $^{7}/_{16}$-20 UNF x 1¾ inch to ASME B18.2.1; **stainless steel** 2x flat gaskets made of PTFE, max. permissible 420 bar (6092 psi), 80 °C (176 °F)	**K46**	**7MF9411-5DC**
Accessory set to DIN[2)]		
(connection between valve manifold and pressure transmitter)		
for valve manifold 7MF9411-5A.		
2x screws M10x45 to DIN EN 24014; chromized steel 2x washers Ø 10.5 mm to DIN 125; 1x gasket made of PTFE, max. permissible 420 bar (6092 psi), 80 °C (176 °F)	**K15**	**7MF9411-7BB**
2x screws M10x45 to DIN EN 24014; **stainless steel** 2x washers Ø 10.5 mm to DIN 125, **stainless steel**; 1x gasket made of PTFE, max. permissible 420 bar (6092 psi), 80 °C (176 °F)	**K25**	**7MF9411-7BC**

© Siemens 2020

2-, 3- and 5-spindle valve manifolds DN 5

Selection and Ordering data	Order code	Article No.
***Further designs*[1)]**		
Please add "**-Z**" to Article No. and specify Order code.		
for valve manifolds 7MF9411-5B. and -5C.		
4x screws M10x45 to DIN EN 24014; chromized steel 4x washers Ø 10.5 mm to DIN 125; 2x flat gaskets made of PTFE, max. permissible 420 bar (6092 psi), 80 °C (176 °F) Flange connection with M10 screws only permissible up to PN 160.	**K16**	**7MF9411-6BB**
4x screws M10x45 to DIN EN 24014; **stainless steel** 4x washers Ø 10.5 mm to DIN 125, **stainless steel**; 2x flat gaskets made of PTFE, max. permissible 420 bar (6092 psi), 80 °C (176 °F) Flange connection with M10 screws only permissible up to PN 160.	**K26**	**7MF9411-6BC**
Mounting plate		
• for valve manifold, made of electrogalvanized sheet-steel		
- **for wall mounting** or for securing on rack (72 mm grid), weight 0.5 kg Scope of delivery: 1 mounting plate with bolts for mounting on valve manifold	**M11**	**7MF9006-6EA**
- **for pipe mounting,** weight 0.7 kg Scope of delivery: 1x mounting plate M11, 2x pipe brackets with nuts and washers (for pipe with max. Ø 60.3 mm) and fastening screws for mounting on valve manifold	**M12**	**7MF9006-6GA**
• for valve manifold, made of **stainless steel 316L**		
- **for wall mounting** or for securing on rack (72 mm grid), weight 0.5 kg Scope of delivery: 1 mounting plate with bolts for mounting on valve manifold	**M21**	**7MF9006-6EC**
- **for pipe mounting,** weight 0.7 kg Scope of delivery: 1x mounting plate M21, 2x pipe brackets with nuts and washers (for pipe with max. Ø 60.3 mm)	**M22**	**7MF9006-6GC**
Valve manifold 100 bar		
Oil- and grease-free cleaning for oxygen applications, max. pressure PN 100 (1450 psi) and max. temperature 60 °C (140 °F)		
• for 7MF9411-5A.	**S12**	
• for 7MF9411-5B.	**S13**	
• for 7MF9411-5C.	**S14**	
NACE MR-0175-certified incl. inspection certificate 3.1 to EN 10204	**D07**	

1) When ordering accessory set or mounting together with the valve manifolds, please use Order code; otherwise use Article No.
2) Flange connections to DIN 19213 only permissible up to PN 160 (2321 psi)!

Accessories

Accessory set for 2-, 3- and 5-spindle valve manifolds

2-spindle valve manifold DN 5

- K35: 2 screws $^{7}/_{16}$-20 UNF x 1¾ inch to ASME B18.2.1, 1 flat gasket
- K15: 2 screws M10x45 to DIN EN 24014, 2 washers, 1 flat gasket

3-spindle and 5-way valve manifold DN 5

- K36: 4 screws $^{7}/_{16}$-20 UNF x 1¾ inch to ASME B18.2.1, 2 flat gaskets
- K16: 4 screws M10x45 to DIN EN 24014, 4 washers, 2 flat gaskets

Washers Ø 10.5 to DIN 125

Flat gaskets made of PTFE, max. 420 bar (6092 psi), 80 °C (176 °F)

Note: Flange connection with M10 screws only permissible up to PN 160!

Mounting plate

Made of electrogalvanized sheet-steel

- M11: For wall mounting or for securing on rack (72 mm grid)
  Scope of delivery:
  - 1 mounting plate with bolts for mounting on valve manifold
- M12: For pipe mounting
  Scope of delivery:
  - 1 mounting plate M11
  - 2 pipe brackets with nuts and washers for pipes with max. Ø 60.3 mm

Valve manifold 100 bar, suitable for oxygen

- S12: For 2-way valve manifold
- S13: For 3-way valve manifold
- S14: For 5-way valve manifold

Characteristic curves

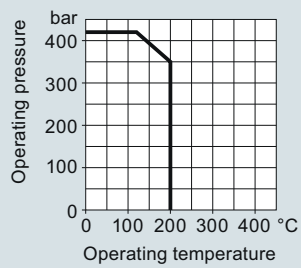

Valve manifolds PN 5 (7MF9411-5..), permissible working pressure as a function of the permissible working temperature

© Siemens 2020

Dimensional drawings

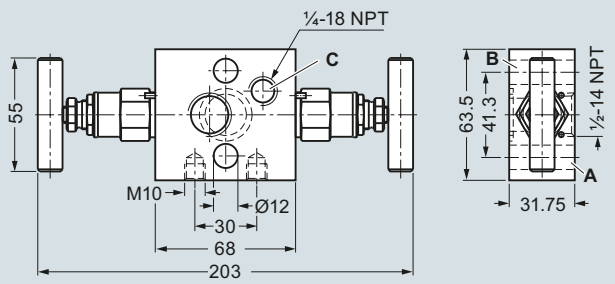

A Process connection: ½-14 NPT
B Transmitter connection: Flange connection to IEC 61518, form B
C Vent / test connection: ¼-18 NPT
Valve design: external spindle thread

2-spindle valve manifold DN 5 (7MF9411-5A.), dimensions in mm

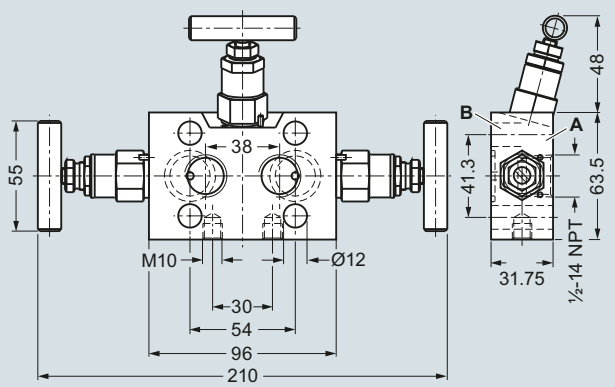

A Process connection: ½-14 NPT
B Transmitter connection: Flange connection to IEC 61518, form B
Valve design: external spindle thread

3-spindle valve manifold DN 5 (7MF9411-5B.), dimensions in mm

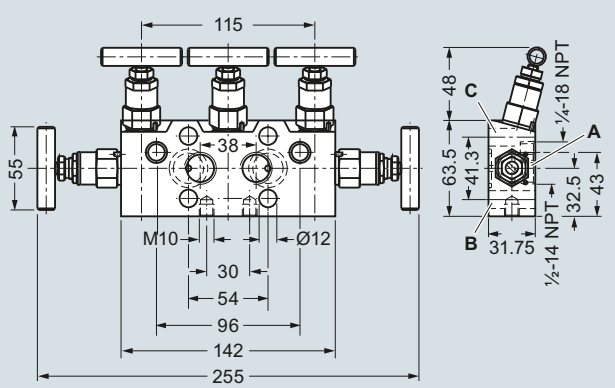

A Process connection: ½-14 NPT
B Transmitter connection: Flange connection to IEC 61518, form B
C Vent / test connection: ¼-18 NPT
Valve design: external spindle thread

5-spindle valve manifold DN 5 (7MF9411-5C.), dimensions in mm

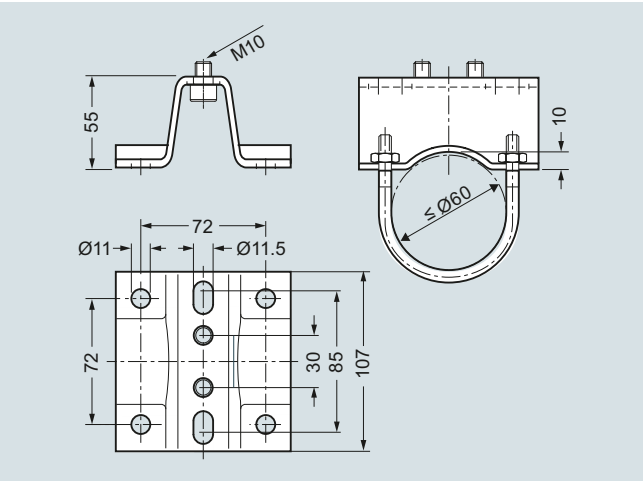

Mounting plate 7MF9006-6.. (M11, M12) for valve manifold, dimensions in mm

Schematics

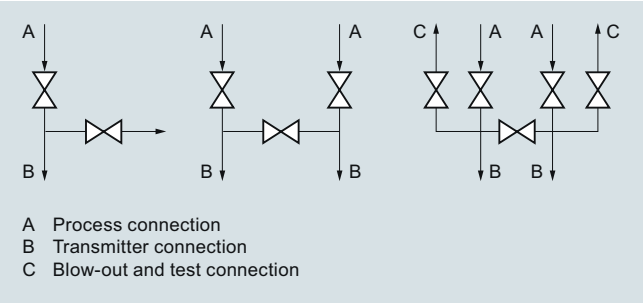

A Process connection
B Transmitter connection
C Blow-out and test connection

2-spindle, 3-spindle and 5-spindle valve manifold DN 5, connections

© Siemens 2020

Multiway cocks PN 100

Overview

Multiway cock PN 100 (1450 psi) (7MF9004-1P.) for differential pressure transmitters

The multiway cock PN 100 (1450 psi) can be flanged to pressure transmitters for differential pressure.

Benefits

- Version available for aggressive liquids, gases and vapors
- Robust design
- Oil-free and grease-free version possible
- One-hand operation

Application

The PN 100 (1450 psi) multiway cock is available in versions for aggressive and non-aggressive liquids, gases and vapors.

Design

The multiway cock can be flanged with four screws to pressure transmitters for differential pressure.

The PN 100 (1450 psi) has 2 process connections and one blow-out connection. A steel version of the multiway cock is available for non-aggressive media, and a stainless steel version for aggressive media. The enclosure is forged in one piece. The switching lever is removable.

Sealing can be improved during operation.

Note: An accessory set is always required for flanging of the multiway cock to a differential pressure transmitter.

Function

- Shutting off the differential pressure lines
- Blowing out the differential pressure lines
- Testing the pressure transmitter zero

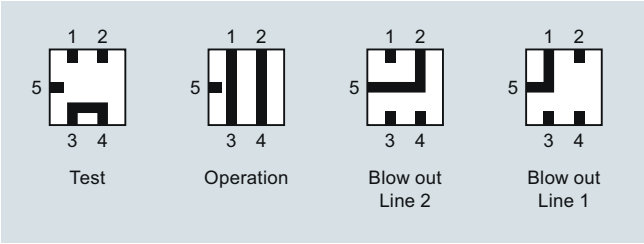

Cock positions; the symbols are printed on the cock

Technical specifications

Multiway cocks PN 100		
Medium	**Water, non-aggressive liquids and gases**	**Aggressive liquids, gases and vapors**
Material	P250GH, mat. No.: 1.0460	X 6 CrNiMoTi 17 12 2, mat. No. 1.4571/316Ti
Connections	Steel, for pipe Ø 12 mm, L series	Stainless steel, for pipe Ø 12 mm, L series
• Process connection	2 bulkhead glands	
• Connection for blowing out	Pipe union with ferrule	
Max. permissible working temperature	200 °C (392 °F)	
Max. permissible working pressure	100 bar (1450 psi) (up to max. 60 °C (140 °F))	
Weight	2.5 kg	

Selection and Ordering data	Article No.
Multiway cock PN 100 (1450 psi) ↗	**7MF9004-■■A**
↗ Click on the Article No. for the online configuration in the PIA Life Cycle Portal.	
for flanging to pressure transmitters, weight 2.5 kg (without accessory set), without certificate	
For water and non-aggressive gases and vapors	**1P**
For aggressive liquids, gases and vapors	**1Q**
Accessories	
Factory certificate according to EN 10204–2.2	**7MF9000-8AB**
Material inspection certificate EN 10204-3.1	**7MF9000-8AD**

Selection and Ordering data	Order code	Article No.
Further designs[1] Please add "**-Z**" to Article No. and specify Order code.		
Accessory set to EN (required for flanging, weight 0.2 kg) 4x screws $^{7}/_{16}$-20 UNF x 1 inch to ASME B18.2.1; chromized steel 2x gaskets made of PTFE, max. permissible temperature 80 °C (176 °F)	**L31**	**7MF9004-5CC**
Accessory set to DIN (required for flanging, weight 0.2 kg) 4x screws M10x25 to DIN EN 24017; chromized steel, 4x washers Ø 10.5 mm to DIN 125; 2x gaskets made of PTFE, max. permissible temperature 80 °C (176 °F)		
• Standard design	**L11**	**7MF9004-6AD**
• Version for oxygen (together with Order code S11	**L15**	**7MF9004-6AE**
Multiway cock in oil-free and grease-free design Oil- and grease-free cleaning for oxygen applications, max. pressure PN 100 (1450 psi) and max. temperature 60 °C (140 °F), BAM-tested lubricant, gasket suitable for oxygen measurement (only with Article No. 7MF9004–1Q.Z)	**S11**	
Mounting bracket Required **for wall mounting** or for securing on rack (72 mm grid), made of electrogalvanized sheet-steel, weight 0.85 kg	**M13**	**7MF9004-6AA**
NACE MR-0175-certified incl. inspection certificate 3.1 to EN 10204 (only available for version 7MF9004-1QA)	**D07**	

[1] When ordering accessory set or mounting together with the multiway cock, please use Order code; otherwise use Article No.

© Siemens 2020

Accessories

Accessory set for multiway cock PN 100

- L31: 4 screws $^{7}/_{16}$-20 UNF x 1 inch, 2 flat gaskets
- L11: 4 screws M10x25 to DIN EN 24017, 4 washers, 2 flat gaskets
- L15 (suitable for oxygen): 4 screws M10x25 to DIN EN 24017, 4 washers, 2 flat gaskets

Washers Ø 10.5 to DIN 125

Flat gaskets made of PTFE, max. permissible temperature 80 °C (176 °F)

Multiway cock in oil-free and grease-free design

- S11 (only for aggressive liquids, gases and vapors (7MF9004-1Q.)): Max. PN 63 (914 psi) (instead of PN 100 (1450 psi)), BAM-tested lubricant, gasket suitable for oxygen

Mounting brackets

- M13: Required for wall mounting or for securing on rack (72 mm grid); made of electrogalvanized sheet-steel

Characteristic curves

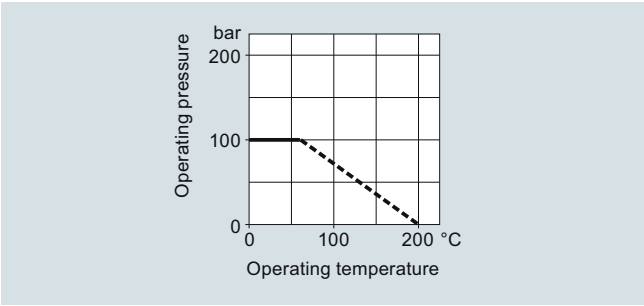

Multiway cock PN 100 (1450 psi), permissible operating pressure as a function of the permissible operating temperature

Dimensional drawings

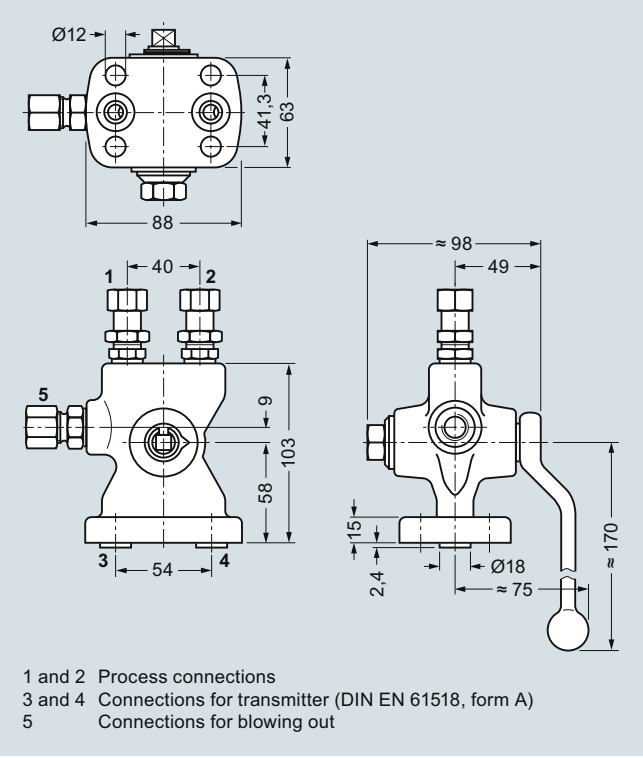

Multiway cock 7MF9004-1P. for flanging to pressure transmitters for differential pressure, dimensions in mm

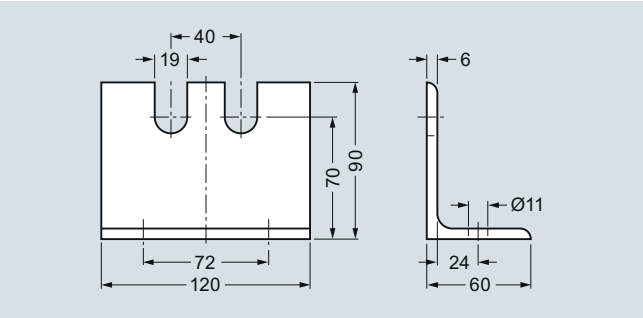

Mounting bracket 7MF9004-6AA (M13), dimensions in mm

© Siemens 2020

Overview

The three-spindle and five-spindle valve manifolds DN 5 (7MF9410-1../-3..) are used to shut off the differential pressure lines and to check the transmitter zero.

In addition, the five-way valve manifold permits blowing out of the differential pressure lines.

Benefits

- Available for aggressive and non-aggressive liquids and gases
- Max. working pressure 420 bar (6092 psi), with version for oxygen max. 100 bar (1450 psi)

Application

The 3-way and 5-way valve manifolds are available in versions for aggressive and non-aggressive liquids and gases.

Mounting plates are available for wall mounting, for securing to mounti ng racks or for pipe mounting.

Design

The process connection of the 3-way and 5-way valve manifolds is a pipe union with ferrule.

Both valve manifolds have 2 flange connections for connecting a pressure transmitter.

In addition, the five-way valve manifold has 2 blow-out connections.

Depending on the version the valve manifold has either 3 or 5 valves, each with an internal spindle thread.

Materials used

	For non-aggressive liquids and gases		For aggressive liquids and gases	
Component	**Material**	**Mat. No.**	**Material**	**Mat. No.**
Enclosure	P250GH	1.0460	X 6 CrNiMoTi17 12 2	1.4571/ 316Ti
Head parts	C 35	1.0501		
Spindles	X 12 CrMoS 17	1.4104		
Cones	X 35 CrMo 17 hardened and tempered	1.4122		
Valve seats	X 6 CrNiMoTi 17 12 2	1.4571/ 316Ti		
Packings	PTFE	-	PTFE	-

Function

- Shutting off the differential pressure lines
- Checking the pressure transmitter zero
- In addition, the five-way valve manifold permits blowing out of the differential pressure lines.

Selection and Ordering data	Article No.
3-way valve manifold DN 5 ↗	**7MF9410-■■A**
↗ Click on the Article No. for the online configuration in the PIA Life Cycle Portal.	
For flanging to pressure transmitters for differential pressure, process connection: Pipe union with ferrule, max. working pressure 420 bar (6092 psi), weight 2.9 kg (order accessory set and mounting plate with Order code), without certificate	
• for non-aggressive liquids and gases	**1 E**
• for aggressive liquids and gases	**1 F**
5-way valve manifold DN 5	
↗ Click on the Article No. for the online configuration in the PIA Life Cycle Portal.	
For flanging to pressure transmitters for differential pressure, process connection: Pipe union with ferrule, max. working pressure 420 bar (6092 psi), weight 4.4 kg (order accessory set and mounting plate with Order code), without certificate	
• for non-aggressive liquids and gases	**3 E**
• for aggressive liquids and gases	**3 F**
Accessories	
Factory certificate according to EN 10204–2.2	**7MF9000-8AB**
Material inspection certificate EN 10204-3.1	**7MF9000-8AD**

© Siemens 2020

Selection and Ordering data	Order code	Article No.
Further designs[1]		
Please add "**-Z**" to Article No. and specify Order code.		
Accessory set to EN		
(required for flanging, weight 0.2 kg)		
4x screws $^{7}/_{16}$-20 UNF x $2^{1}/_{8}$ inch to ASME B18.2; chromized steel 2x flat gaskets made of PTFE, max. permissible 420 bar (6092 psi), 80 °C (176 °F)	**B31**	**7MF9010-5CC**
4x screws $^{7}/_{16}$-20 UNF x $2^{1}/_{8}$ inch to ASME B18.2; chromized steel 2x O-rings to DIN 3771, 20 x 2.65 - S - FPM90, max. permissble 420 bar (6092 psi), 120 °C (248 °F)	**B34**	**7MF9410-5CA**
Accessory set to DIN[2]		
(required for flanging, weight 0.2 kg)		
4x screws M10x55 to DIN EN 24014; chromized steel 4x washers Ø 10.5 mm to DIN 125; 2x flat gaskets made of PTFE, max. permissible 420 bar (6092 psi), 80 °C (176 °F)		
• Standard design	**B11**	**7MF9010-6AD**
• Version for oxygen	**B15**	**7MF9010-6AE**
4x screws M10x55 to DIN EN 24014; chromized steel 4x washers Ø 10.5 mm to DIN 125; 2x O-rings to DIN 3771, 20 x 2.65 - S - FPM90, max. permissble 420 bar (6092 psi), 120 °C (248 °F)	**B16**	**7MF9010-6CC**
Mounting plate		
for valve manifold, made of electrogalvanized sheet-steel		
for wall mounting or for securing on rack (72 mm grid), weight 0.5 kg Scope of delivery: 1 mounting plate with bolts for mounting on valve manifold	**M11**	**7MF9006-6EA**
for pipe mounting, weight 0.7 kg Scope of delivery: 1x mounting plate M11, 2x pipe brackets with nuts and washers (for pipe with max. Ø 60.3 mm)	**M12**	**7MF9006-6GA**
valve manifold 100 bar		
suitable for oxygen		
for 7MF9410-1F	**S13**	
for 7MF9410-3F	**S14**	
NACE MR-0175-certified	**D07**	
incl. inspection certificate 3.1 to EN 10204 (only available for version 7MF9410-1FA and -3FA)		

1) When ordering accessory set or mounting together with the valve manifolds, please use Order code; otherwise use Article No.
2) Flange connections to DIN 19213 only permissible up to PN 160 (2321 psi)

Accessories

Accessory set for 3-way and 5-way valve manifold DN 5 for flanging

- B31: 4 screws $^{7}/_{16}$-20 UNF x $2^{1}/_{8}$ inch to ASME B18.2.1, 2 flat gaskets
- B34: 4 screws $^{7}/_{16}$-20 UNF x $2^{1}/_{8}$ inch to ASME B18.2.1, 2 O-rings (FPM 90)
- B11: 4 screws M10x55 to DIN EN 24014, 4 washers, 2 flat gaskets
- B15 (suitable for oxygen): 4 screws M10x55 to DIN EN 24014, 4 washers, 2 flat gaskets
- B16: 4 screws M10x55 to DIN EN 24014, 4 washers, 2 O-rings (FPM 90)

Washers Ø 10.5 to DIN 125

Flat gaskets made of PTFE, max. 420 bar (6092 psi), 80 °C (176 °F)

O-ring to DIN 3771, 20 x 2.65 – S – FPM90, max. 420 bar (6092 psi), 120 °C (248 °F)

Note: M10 screws only permissible up to PN 160 (2320 psi)!

Mounting plate

Made of electrogalvanized sheet-steel

- M11: For wall mounting or for securing on rack (72 mm grid)
  Scope of delivery:
  - 1 mounting plate 7MF9006-6EA with bolts for mounting on valve manifold
- M12: For pipe mounting
  Scope of delivery:
  - 1 mounting plate M11
  - 2 pipe brackets with nuts and washers for pipes with max. Ø 60.3 mm

Valve manifold 100 bar, suitable for oxygen

S12: Only in combination with versions for aggressive liquids and gases

© Siemens 2020

3-way and 5-way valve manifolds DN 5

Characteristic curves

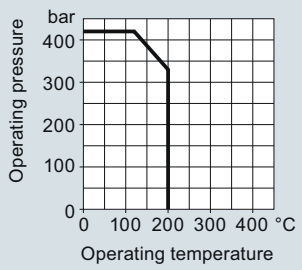

Permissible operating pressure as a function of the permissible operating temperature

Dimensional drawings

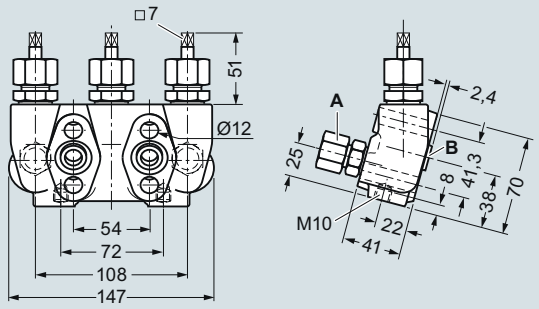

A Process connection (e.g. on primary device): Pipe union with ferrule, diameter 12 mm, S series to DIN 2353
B Transmitter connection: Flange connection to EN 61518, form A
Valve design: internal spindle thread

3-way valve manifold DN 5 (7MF9410-1..), dimensions in mm

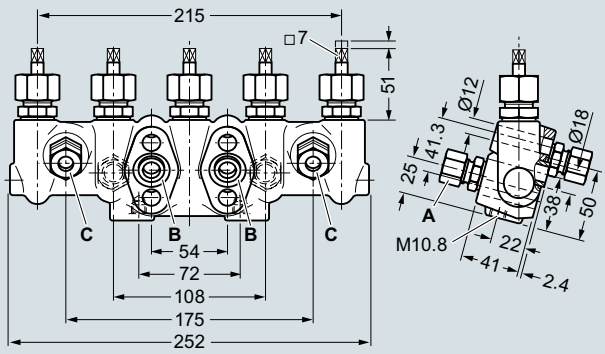

A Process connection (e.g. on primary device): Pipe union with ferrule, diameter 12 mm, S series to DIN 2353
B Transmitter connection: Flange connection to IEC 61518, form A
C Blow-out connection: Pipe union with ferrule, diameter 12 mm, S series to DIN 2353
Valve design: internal spindle thread

5-way valve manifold DN 5 (7MF9410-3..), dimensions in mm

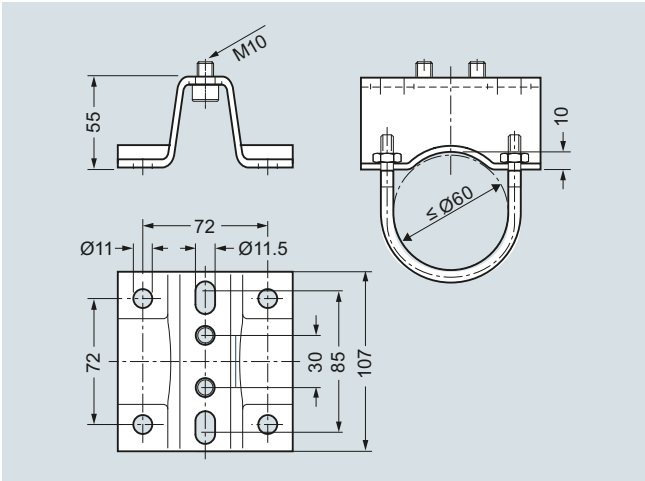

Mounting plate 7MF9006-6.. (M11, M12) for valve manifold, dimensions in mm

Schematics

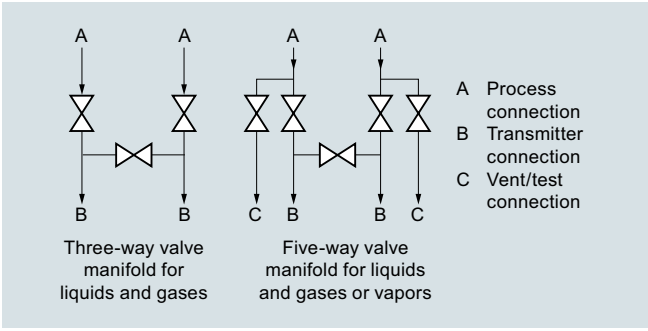

3-way and 5-way valve manifolds, connections

© Siemens 2020

Overview

The 3-way valve manifold DN 8 (7MF9416-1../-2..) is for pressure transmitters for differential pressure. It is used to shut off and blow out differential pressure lines and to test the pressure transmitter zero.

In the designs with a test connection, a test device can be connected to test the pressure transmitter characteristic.

Benefits

- For aggressive and non-aggressive liquids and gases
- The maximum working pressure is 420 bar (6092 psi).

Application

The 3-way valve manifold is available in versions for aggressive and non-aggressive liquids and gases.

Mounting plates are available for wall mounting, for securing to mounting racks or for pipe mounting.

Design

For the process connection on the version for non-aggressive media it is possible to choose between a pipe union with ferrule and welding pins.

The version for aggressive media always has a pipe union with ferrule.

Both versions are available optionally with a test connection M20x1.5.

The valves have an internal spindle thread.

Materials used

	For non-aggressive liquids and gases		For aggressive liquids and gases	
Component	Material	Mat. No.	Material	Mat. No.
Enclosure	P250GH	1.0460	X 6 CrNiMoTi17 12 2	1.4571/316Ti
Head parts	C 35	1.0501		
Spindles	X 12 CrMoS 17	1.4104		
Cones	X 35 CrMo 17 hardened and tempered	1.4122		
Valve seats	X 6 CrNiMoTi 17 12 2	1.4571/316Ti		
Packings	PTFE	-	PTFE	-

Function

The 3-way valve manifold DN 8 performs two functions as standard:

- Shutting off the differential pressure lines
- Checking the pressure transmitter zero

All versions are also available with a test connection, to which a test device for checking the pressure transmitter characteristic can be connected.

Selection and Ordering data	Article No.
3-way valve manifold DN 8 ↗	**7 M F 9 4 1 6 - ■ ■ A**
↗ Click on the Article No. for the online configuration in the PIA Life Cycle Portal.	
For flanging to pressure transmitters for differential pressure, max. working pressure 420 bar (6092 psi), (order accessory set and mounting plate with Order code), without certificate	
For non-aggressive liquids and gases procedss connection: Pipe union with ferrule Ø 12 mm	
• without test connection	**1 B**
• with test connection	**1 C**
For non-aggressive liquids and gases procedss connection: Welding pin Ø 14 x 2.5	
• without test connection	**2 C**
• with test connection	**2 D**
For aggressive liquids and gases process connection: Pipe union with ferrule Ø 12 mm	
• without test connection	**1 D**
• with test connection	**1 E**
Accessories	
Factory certificate according to EN 10204–2.2	**7MF9000-8AB**
Material inspection certificate EN 10204-3.1	**7MF9000-8AD**

© Siemens 2020

3-way valve manifold DN 8

Selection and Ordering data	Order code	Article No.
Further designs[1]		
Please add "**-Z**" to Article No. and specify Order code.		
Accessory set to EN (required for flanging, weight 0.2 kg)		
4x screws $^{7}/_{16}$-20 UNF x $2^{1}/_{8}$ inch to ASME B18.2; chromized steel 2x flat gaskets made of PTFE, max. permissible 420 bar (6092 psi), 80 °C (176 °F)	**B31**	**7MF9010-5CC**
4x screws $^{7}/_{16}$-20 UNF x $2^{1}/_{8}$ inch to ASME B18.2; chromized steel 2x O-rings to DIN 3771, 20 x 2.65 - S - FPM90, max. permissible 420 bar (6092 psi), 120 °C (248 °F)	**B34**	**7MF9410-5CA**
Accessory set to DIN[2] (required for flanging, weight 0.2 kg)		
4x screws M10x55 to DIN EN 24014; chromized steel 4x washers Ø 10.5 mm to DIN 125; 2x flat gaskets made of PTFE, max. permissible 420 bar (6092 psi), 80 °C (176 °F)	**B11**	**7MF9010-6AD**
4x screws M10x55 to DIN EN 24014; chromized steel 4x washers Ø 10.5 mm to DIN 125; 2x O-rings to DIN 3771, 20 x 2.65 - S - FPM90, max. permissible 420 bar (6092 psi), 120 °C (248 °F)	**B16**	**7MF9010-6CC**
Mounting plate For valve manifold, made of electrogalvanized sheet-steel		
for wall mounting or for securing on rack (72 mm grid), weight 0.5 kg Scope of delivery: 1 mounting plate with bolts for mounting on valve manifold	**M11**	**7MF9006-6EA**
for pipe mounting, weight 0.7 kg Scope of delivery: 1x mounting plate M11, 2x pipe brackets with nuts and washers (for pipe with max. Ø 60.3 mm)	**M12**	**7MF9006-6GA**
NACE MR-0175-certified incl. inspection certificate 3.1 to EN 10204 (only available for version 7MF9416-1DA and -1EA)	**D07**	

1) When ordering accessory set or mounting together with the valve manifold, please use Order code; otherwise use Article No.
2) Flange connections to DIN 19213 only permissible up to PN 160 (2321 psi)!

Accessories

Accessory set for 3-way valve manifold DN 8 for flanging

- B31: 4 screws $^{7}/_{16}$-20 UNF x $2^{1}/_{8}$ inch to ASME B18.2.1, 2 flat gaskets
- B34: 4 screws $^{7}/_{16}$-20 UNF x $2^{1}/_{8}$ inch to ASME B18.2.1, 2 O-rings (FPM 90)
- B11: 4 screws M10x55 to DIN EN 24014, 4 washers, 2 flat gaskets
- B16: 4 screws M10x55 to DIN EN 24014, 4 washers, 2 O-rings (FPM 90)

Washers Ø 10.5 to DIN 125

Flat gaskets made of PTFE, max. 420 bar (6092 psi), 80 °C (176 °F)

O-ring to DIN 3771, 20 x 2.65 – S – FPM90, max. 420 bar (6092 psi), 120 °C (248 °F)

Note: M10 screws only permissible up to PN 160 (2320 psi)!

Mounting plate

Made of electrogalvanized sheet-steel

- M11: For wall mounting or for securing on rack (72 mm grid)
  Scope of delivery:
  - 1 mounting plate with bolts for mounting on valve manifold
- M12: For pipe mounting
  Scope of delivery:
  - 1 mounting plate M11
  - 2 pipe brackets with nuts and washers for pipes with max. Ø 60.3 mm

Characteristic curves

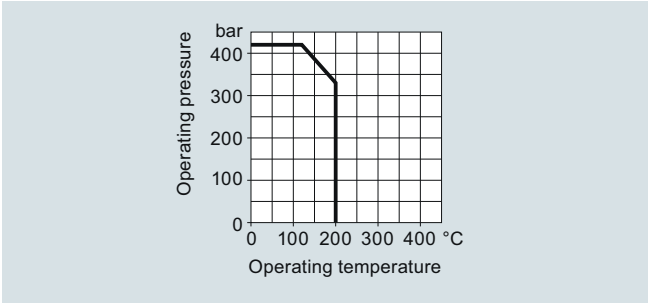

3-way valve manifold DN 8, permissible working pressure as a function of the permissible working temperature

© Siemens 2020

Dimensional drawings

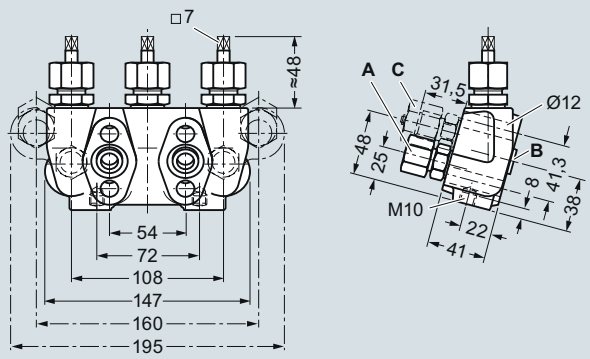

A Process connection (e.g. on primary device): Pipe union with ferrule, diameter 12 mm, S series to DIN 2353
B Transmitter connection: Flange connection to EN 61518, form A
C Test connection: M20 x 1,5
Valve design: internal spindle thread

3-way valve manifold DN 8 (7MF9416-1..) with pipe union, dimensions in mm

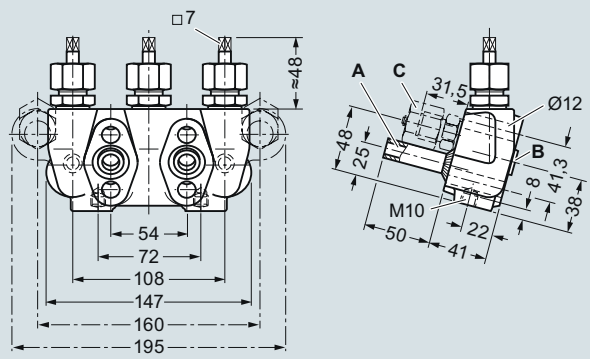

A Process connection (e.g. on primary device): Welding pin, diameter 14 x 2,5
B Transmitter connection: Flange connection to EN 61518, form A
C Test connection: M20 x 1,5
Valve design: internal spindle thread

3-way valve manifold DN 8 (7MF9416-2..) with welding pin, dimensions in mm

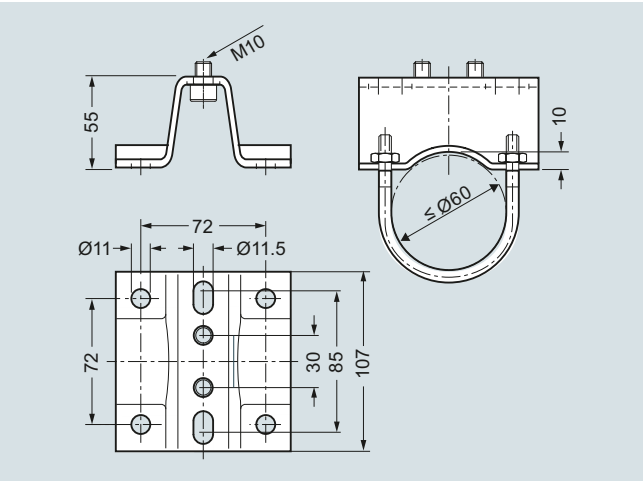

Mounting plate 7MF9006-6.. (M11, M12) for valve manifold, dimensions in mm

Schematics

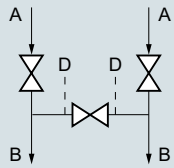

A Process connection
B Transmitter connection
D Vent/test connection

Three-way valve manifold for liquids and gases

3-way valve manifold DN 8, connections

© Siemens 2020

Valve manifold combination DN 5/DN 8

Overview

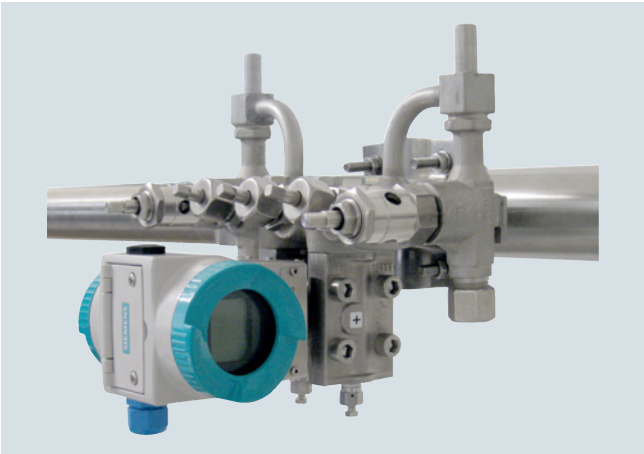

The valve manifold combination DN 5/DN 8 (7MF9416-6..) is for pressure transmitters for differential pressure.

The combination is used to shut off and blow out differential pressure lines and to test the pressure transmitter zero.

In the designs with a test connection, a test device can be connected to test the pressure transmitter characteristic.

Benefits

- Max. working pressure 420 bar (6092 psi)

Application

The valve manifold combination DN 5/DN 8 is designed for vapors.

Design

The valve manifold combination DN 5/DN 8 has a process connection with welding pins.

The connection for the pressure transmitter is designed as as flange connection, while the blow-out connection is designed as a pipe union with ferrule.

The manifold valves have an internal spindle thread, while the blow-out valves have an external spindle thread.

The optional test connections are M20x1.5.

Materials used

	Valve manifold DN 5		Blow-out valves DN 8	
Component	**Material**	**Mat. No.**	**Material**	**Mat. No.**
Enclosure	P250GH	1.0460	16 Mo 3	1.5415
Head parts	C 35	1.0501	21 CrMo V57	1.7709
Spindles	X 12 CrMoS 17	1.4104	X 20 Cr 13	1.4021
Cones	X 35 CrMo 17	1.4122	X 35 CrMo 17 hardened and tempered	1.4122
Valve seats	X 6 CrNiMoTi	1.4571/316Ti	X 20 Cr 13	1.4021
Packings	PTFE	-	Pure graphite	-
Welding pins	-	-	16 Mo 3	1.5415

Function

- Shutting off the differential pressure lines
- Blowing out the differential pressure lines
- Checking the pressure transmitter zero

As an option it is possible to order a version with a test connection, to which a test device for checking the transmitter characteristic can be connected.

Selection and Ordering data	Article No.
Valve manifold combination DN 5/DN 8 for vapors ↗	**7MF9416-6■A**
↗ Click on the Article No. for the online configuration in the PIA Life Cycle Portal.	
For flanging to pressure transmitters for differential pressure, max. working pressure 420 bar (6092 psi), also available in stainless steel on request (order accessory set with Order code), without certificate	
• without test connection	**C**
• with test connection M20 × 1.5	**D**
Accessories	
Factory certificate according to EN 10204–2.2	**7MF9000-8AB**
Material inspection certificate EN 10204-3.1	**7MF9000-8AD**

Selection and Ordering data	Order code	Article No.
Further designs[1]		
Please add "**-Z**" to Article No. and specify Order code.		
Accessory set to EN (required for flanging, weight 0.2 kg)		
4x screws $^{7}/_{16}$-20 UNF x $2^{1}/_{8}$ inch to ASME B18.2; chromized steel 2x O-rings to DIN 3771, 20 x 2.65 - S - FPM90, max. permissble 420 bar (6092 psi), 120 °C (248 °F)	**B34**	**7MF9410-5CA**
Accessory set to DIN[2] (required for flanging, weight 0.2 kg)		
4x screws M10x55 to DIN EN 24014; chromized steel 4x washers Ø 10.5 mm to DIN 125; 2x O-rings to DIN 3771, 20 x 2.65 - S - FPM90, max. permissble 420 bar (6092 psi), 120 °C (248 °F);Flange connection to DIN 19213 only permissible up to PN 160!	**B16**	**7MF9010-6CC**

[1] When ordering accessory set together with the valve manifold combination, please use Order code; otherwise use Article No.

[2] Flange connections to DIN 19213 only permissible up to PN 160 (2321 psi)

© Siemens 2020

Accessories

Accessory set for valve manifold combination DN 5/DN 8 for flanging

- B34: 4 screws $^{7}/_{16}$-20 UNF x $2^{1}/_{8}$ inch to ASME B18.2.1, 2 O-rings (FPM 90)
- B16: 4 screws M10x55 to DIN EN 24014, 4 washers, 2 O-rings (FPM 90)

Washers Ø 10.5 to DIN 125

O-ring to DIN 3771, 20 x 2.65 - S – FPM90, max. 420 bar (6092 psi), 120 °C (248 °F)

Note: M10 screws only permissible up to PN 160 (2321 psi)!

Characteristic curves

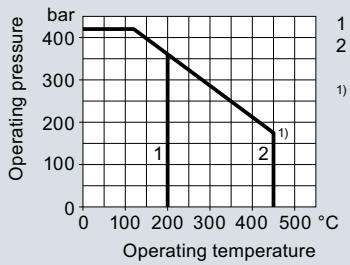

1 Valve manifold
2 Blow-out connection

1) According to DIN 19210 the design can be such that the temperatures for the differential pressure line can be set approx. 100 °C (212 °F) lower than the media temperature.

Permissible operating pressure as a function of the permissible operating temperature

Dimensional drawings

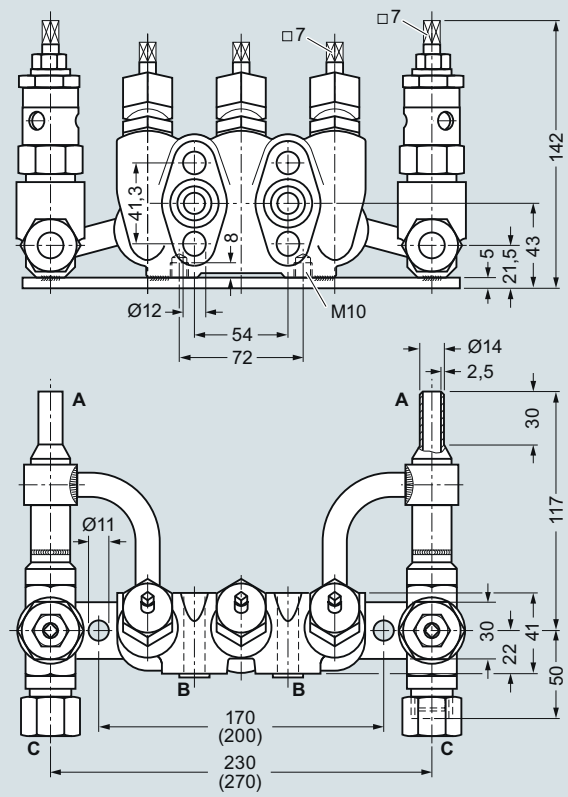

A Process connection (e.g. on primary device): Welding pin
B Transmitter connection: Flange connection to EN 61518, form A
C Blow-out connection: Pipe union with ferrule, diameter 14 mm, S series to DIN 2353
Valve design:
- Manifold valves: internal spindle thread
- Blow-out valves: external spindle thread

Valve manifold combination DN 5/DN 8 (7MF9416-6C.), dimensions in mm (deviating dimensions for 7MF9416-6D. shown in brackets)

Schematics

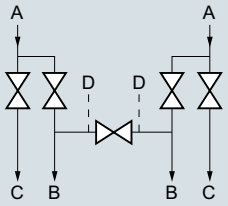

A Process connection
B Transmitter connection
C Blow-out connection
D Test connection

Valve manifold combination for vapors

Valve manifold combination DN 5/DN 8, connections

© Siemens 2020

Valve manifold combination DN 8

Overview

The valve manifold combination DN 8 (7MF9416-4..) is for pressure transmitters for differential pressure.

It is used to shut off and blow out the differential pressure lines and to check the pressure transmitter zero.

In the designs with a test connection, a test device can be connected to check the pressure transmitter characteristic.

Benefits

- Max. working pressure 420 bar (6092 psi)

Application

The valve manifold combination DN 8 is designed for vapors.

Design

The valve manifold combination DN 8 has a process connection with welding pins.

The connection for the pressure transmitter is designed as as flange connection, while the blow-out connection is designed as a pipe union with ferrule.

The manifold valves have an internal spindle thread, while the blow-out valves have an external spindle thread.

The optional test connection is M20x1.5.

The valve manifold combination DN 8 is supplied with a mounting plate.

Materials used

	Valve manifold		Blow-out valves	
Component	**Material**	**Mat. No.**	**Material**	**Mat. No.**
Enclosure	P250GH	1.0460	16 Mo 3	1.5415
Head parts	C 35	1.0501	21 CrMo V57	1.7709
Spindles	X 12 CrMoS 17	1.4104	X 20 Cr 13	1.4021
Cones	X 35 CrMo 17	1.4122	X 35 CrMo 17 hardened and tempered	1.4122
Valve seats	X 6 CrNiMoTi	1.4571/316Ti	X 20 Cr 13	1.4021
Packings	PTFE	-	Pure graphite	-
Welding pins	-	-	16 Mo 3	1.5415

Function

- Shutting off the differential pressure lines
- Blowing out the differential pressure lines
- Checking the pressure transmitter zero

As an option it is possible to order a version with a test connection, to which a test device for checking the pressure transmitter characteristic can be connected.

Selection and Ordering data	Article No.
Valve manifold combination DN 8 for vapors ↗	**7MF9416-■■A**
↗ Click on the Article No. for the online configuration in the PIA Life Cycle Portal.	
for flanging to pressure transmitters for differential pressure, with mounting plate, max. working pressure 420 bar (6092 psi), also available in stainless steel on request (order accessory set with Order code), without certificate	
• without test connection	**4C**
• with test connection M20 × 1.5	**4D**
Accessories	
Factory certificate according to EN 10204–2.2	**7MF9000-8AB**
Material inspection certificate EN 10204-3.1	**7MF9000-8AD**

Selection and Ordering data	Order code	Article No.
Further designs[1]		
Please add "**-Z**" to Article No. and specify Order code.		
Accessory set to EN (required for flanging, weight 0.2 kg)		
4x screws $^{7}/_{16}$-20 UNF x $2^{1}/_{8}$ inch to ASME B18.2; chromized steel 2x O-rings to DIN 3771, 20 x 2.65 - S - FPM90, max. permissble 420 bar (6092 psi), 120 °C (248 °F)	**B34**	**7MF9410-5CA**
Accessory set to DIN[2] (required for flanging, weight 0.2 kg)		
4x screws M10x55 to DIN EN 24014; chromized steel 4x washers Ø 10.5 mm to DIN 125; 2x O-rings to DIN 3771, 20 x 2.65 - S - FPM90, max. permissble 420 bar (6092 psi), 120 °C (248 °F) Flange connection to DIN 19 213 only permissible up to PN 160!	**B16**	**7MF9010-6CC**

1) When ordering accessory set together with the valve manifold combination, please use Order code; otherwise use Article No.
2) Flange connections to DIN 19213 only permissible up to PN 160 (2321 psi)

Accessories

Accessory set for valve manifold combination DN 8 for flanging

- B34: 4 screws $^{7}/_{16}$-20 UNF x $2^{1}/_{8}$ inch to ASME B 18.2.1, 2 O-rings (FPM 90)
- B16: 4 screws M10x55 to DIN EN 24014, 4 washers, 2 O-rings (FPM 90)

Washers Ø 10.5 to DIN 125

O-ring to DIN 3771, 20 x 2.65 – S – FPM90, max. 420 bar (6092 psi), 120 °C (248 °F)

Note: M10 screws only permissible up to PN 160 (2321 psi)!

© Siemens 2020

Characteristic curves

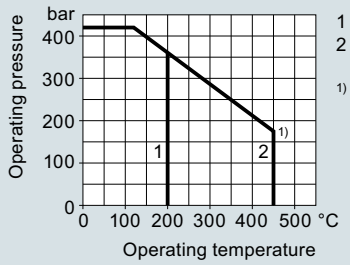

1 Valve manifold
2 Blow-out connection

1) According to DIN 19210 the design can be such that the temperatures for the differential pressure line can be set approx. 100 °C (212 °F) lower than the media temperature.

Permissible operating pressure as a function of the permissible operating temperature

Schematics

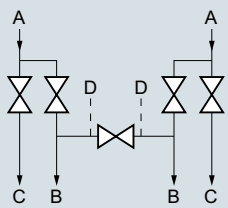

A Process connection
B Transmitter connection
C Blow-out connection
D Test connection

Valve manifold combination for vapors

Valve manifold combination DN 8, connections

Dimensional drawings

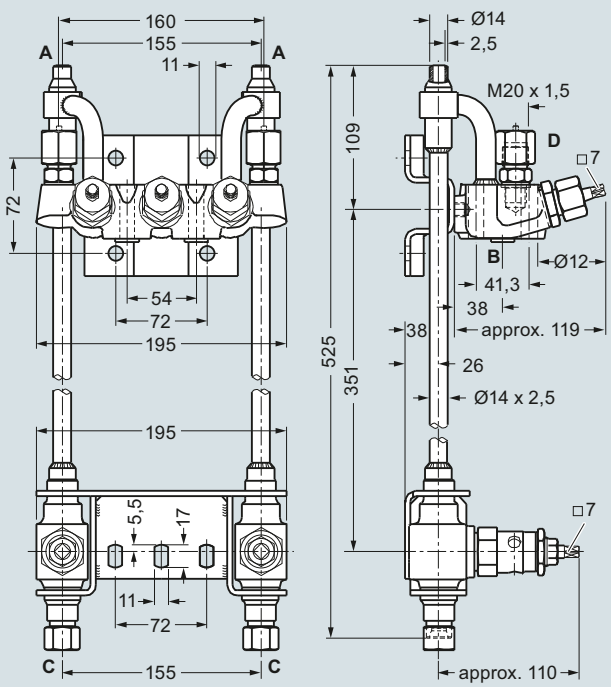

A Process connection (e.g. on primary device): Welding pin
B Transmitter connection: Flange connection to EN 61518, form A
C Blow-out connection: Pipe union with ferrule, diameter 14 mm, S series to DIN 2353
D Test connection (only with Article No. 7MF9416-4D.): M20 x 1,5
Valve design:
- Manifold valves: internal spindle thread
- Blow-out valves: external spindle thread

Valve manifold combination DN 8 (7MF9416-4..), dimensions in mm

© Siemens 2020

2-, 3- and 5-spindle valve manifolds for protective box

Overview

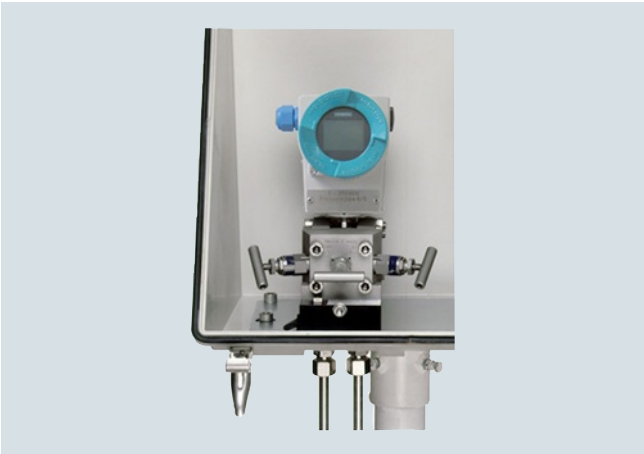

The 2-spindle, 3-spindle and 5-spindle valve manifolds (7MF9412-1..) are used to shut off the differential pressure lines and to check the transmitter zero point.

The 2-spindle and the 5-spindle valve manifolds also enable venting on the transmitter side and checking of the pressure transmitter characteristic.

These valve manifolds are designed for installation in protective boxes. However, using a mounting bracket, they can also be used for wall, frame or tube mounting.

SITRANS P DS III and SITRANS P500 transmitters can be operated and read from the front if these valve manifolds are used..

Application

The valve manifolds DN 5 are designed for liquids and vapors and for installing in protective boxes.

Each is available in a version for oxygen on request

Design

All versions of the spindle manifolds have a process connection ½-14 NPT.

The connection for the pressure transmitter is always designed as a flange connection to IEC 61518/DIN EN 61518, Form A.

The 2-spindle and the 5-spindle valve manifold have in addition a vent and test connection ¼-18 NPT.

The valves have an external spindle thread.

Materials used

Components	Material	Mat. No.
Enclosure	X 2 CrNiMo 17 13 2	1.4404/316L
Cones	X 6 CrNiMoTi 17 12 2	1.4571/316Ti
Spindles	X 2 CrNiMo 18 10	1.4404/316L
Head parts	X 5 CrNiMo 18 10	1.4401/316
Packings	PTFE	-

Functions

Functions of all valve manifolds:

- Shutting off the differential pressure lines
- Checking the pressure transmitter zero

Additional functions of the 2-spindle and 5-spindle valve manifolds through the vent and test connection:

- Venting on the transmitter side
- Checking the pressure transmitter characteristic

Selection and Ordering data	Article No.
Valve manifolds DN 5 for mounting in protective boxes ↗	**7MF9412-■■A**
↗ Click on the Article No. for the online configuration in the PIA Life Cycle Portal.	
for liquids and gases for flanging to pressure transmitters for absolute and differential pressure Material: stainless steel, mat. No: 1.4404/316L max. working pressure 420 bar (6092 psi) (order accessory set with Order code), without certificate	
• 2-spindle valve manifold with rotatng sleeve G½	**1 B**
• 2-spindle valve manifold with flange connection	**1 C**
• 3-spindle valve manifold	**1 D**
• 5-spindle valve manifold	**1 E**
Accessories	
Factory certificate according to EN 10204–2.2	**7MF9000-8AB**
Material inspection certificate EN 10204-3.1	**7MF9000-8AD**

Selection and Ordering data	Order code	Article No.
Further designs[1)]		
Please add "**-Z**" to Article No. and specify Order code.		
Accessory set to EN (connection between valve manifold and pressure transmitter)		
for valve manifold 7MF9412–1C.		
2x screws $^{7}/_{16}$-20 UNF x 2 inch to ASME B18.2.1; chromized steel 1x O-ring to DIN 3771, 20 x 2.65 - S - FPM90, max. permissble 420 bar (6092 psi), 120 °C (248 °F)	**F32**	**7MF9412-6CA**
2x screws $^{7}/_{16}$-20 UNF x 2 inch to ASME B18.2.1; chromized steel 1x gasket made of PTFE, max. permissible 420 bar (6092 psi), 80 °C (176 °F)[2)]	**F35**	**7MF9412-6DA**
for valve manifold 7MF9412–1D and -1E.		
4x screws $^{7}/_{16}$-20 UNF x 2 inch to ASME B18.2.1; chromized steel 2x O-rings to DIN 3771, 20 x 2.65 - S - FPM90, max. permissble 420 bar (6092 psi), 120 °C (248 °F)[2)]	**F34**	**7MF9412-6GA**
4x screws $^{7}/_{16}$-20 UNF x 2 inch to ASME B18.2.1; chromized steel 2x flat gaskets made of PTFE, max. permissible 420 bar (6092 psi), 80 °C (176 °F)[2)]	**F36**	**7MF9412-6HA**

© Siemens 2020

Selection and Ordering data	Order code	Article No.
***Further designs*[1)]**		
Please add "**-Z**" to Article No. and specify Order code.		
Accessory set to DIN (connection between valve manifold and pressure transmitter)		
For valve manifold 7MF9412–1C.		
2x screws M10x50 to DIN EN 24014; chromized steel 2x washers Ø 10.5 mm to DIN 125; 1x O-ring to DIN 3771, 20 x 2.65 - S - FPM90, max. permissble 420 bar (6092 psi), 120 °C (248 °F)[2)]	**F12**	**7MF9412-6AA**
2x screws M10x50 to DIN EN 24014; chromized steel 2x washers Ø 10.5 mm to DIN 125; 1x gasket made of PTFE, max. permissible 420 bar (6092 psi), 80 °C (176 °F)[2)]	**F15**	**7MF9412-6BA**
For valve manifold 7MF9412–1D and -1E.		
4x screws M10x50 to DIN EN 24014; chromized steel 4x washers Ø 10.5 mm to DIN 125; 2x O-rings to DIN 3771, 20 x 2.65 - S - FPM90, max. permissble 420 bar (6092 psi), 120 °C (248 °F)[2)]	**F14**	**7MF9412-6EA**
4x screws M10x50 to DIN EN 24014; chromized steel 4x washers Ø 10.5 mm to DIN 125; 2x flat gaskets made of PTFE, max. permissible 420 bar (6092 psi), 80 °C (176 °F)[2)]	**F16**	**7MF9412-6FA**
Mounting bracket required for wall mounting or for securing to mounting rack, with bolts for mounting on valve manifold		
• for valve manifolds 7MF9412-1B. and -1C.	**M14**	**7MF9006-6LA**
• for valve manifold 7MF9412-1D.	**M17**	**7MF9006-6NA**
• for valve manifold 7MF9412-1E.	**M18**	**7MF9006-6PA**
Mounting clip		
2 off, to secure mounting bracket to pipe	**M16**	**7MF9006-6KA**
Valve manifold 100 bar		
Oil- and grease-free cleaning for oxygen applications, max. pressure PN 100 (1450 psi) and max. temperature 60 °C (140 °F)		
• for valve manifolds 7MF9412-1B. and -1C.	**S12**	
• for valve manifold 7MF9412-1D.	**S13**	
• for valve manifold 7MF9412-1E.	**S14**	
NACE MR-0175-certified incl. inspection certificate 3.1 to EN 10204	**D07**	

1) When ordering accessory set or mounting together with the valve manifolds, please use Order code; otherwise use Article No.
2) Flange connections with M10 screws only permissible up to PN 160 (2321 psi)!

Accessories

Accessory set for 2-, 3- and 5-spindle valve manifolds (Connection between valve manifold and transmitter)

2-spindle valve manifold DN 5 with flange connection

- F32: 2 screws 7/16 20 UNF x 2 inch to ASME B 18.2.1, 1 O Ring (FPM90)
- F35: 2 screws 7/16 20 UNF x 2 inch to ASME B 18.2.1, 1 flat-gasket
- F12: 2 screws M10x50 to DIN EN 24014, 2 washers, 1 O-ring (FPM90)
- F15: 2 screws M10x50 to DIN EN 24014, 2 washers, 1 flat gasket

3-spindle and 5-way valve manifold DN 5

- F34: 4 screws 7/16 20 UNF x 2 inch toASME B 18.2.1, 2 O-rings (FPM90)
- F36: 4 screws 7/16 20 UNF x 2 inch toASME B 18.2.1, 2 flat-gaskets
- F14: 4 screws M10x50 to DIN EN 24014, 4 washers, 2 O-rings (FPM90)
- F16: 4 screws M10x50 to DIN EN 24014, 4 washers, 2 flat-gaskets

Washers Ø 10.5 to DIN 125

Flat-gaskets made of PTFE, max. 420 bar (6092 psi), 80 °C (176 °F)

O-ring to DIN 3771, 20 x 2.65 - S - FPM90; max.420 bar (6092 psi), 120 °C (248 °F)

Note:
Flange connections with M10 screws only permissible up to PN 160 (2321 psi)!

Mounting bracket for wall mounting or for securing to mounting rack

With bolds for mounting on valve manifold

- M14: For 2-spindle valve manifold DN 5
- M17: For 3-spindle valve manifold DN 5
- M18: For 5-spindle valve manifold DN 5

Mounting clips (2 off)

- M16: For securing the mounting brackets M14, M17 and M18 to pipe

Valve manifold 100 bar, suitable for oxygen

- S12: For 2-spindle valve manifold DN 5
- S13: For 3-spindle valve manifold DN 5
- S14: For 5-spindle valve manifold DN 5

Characteristic curves

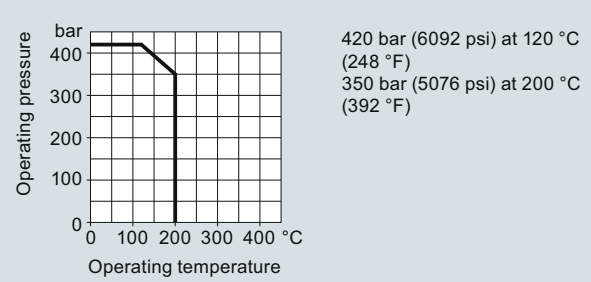

Permissible operating pressure as a function of the permissible operating temperature

© Siemens 2020

Dimensional drawings

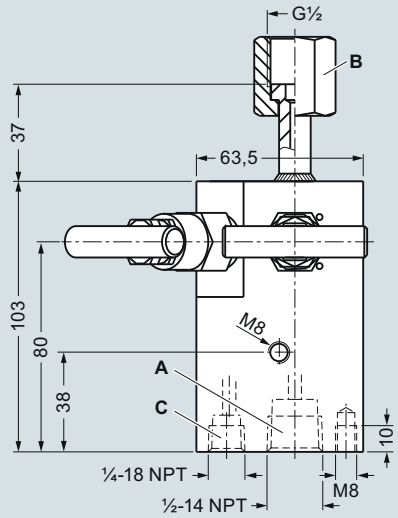

A Process connection: ½-14 NPT
B Transmitter connection: Nipple to DIN 16284, G½, SW 27
C Vent / test connection: ¼-18 NPT

2-spindle valve manifold DN 5 (7MF9412-1B..) with rotating sleeve, dimensions in mm

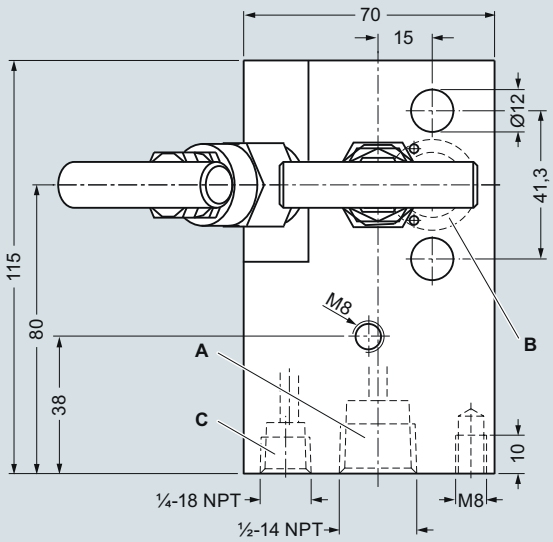

A Process connection: ½-14 NPT
B Transmitter connection: Flange connection to EN 61518, form A
C Vent / test connection: ¼-18 NPT
Valve design: external spindle thread

2-spindle valve manifold DN 5 (7MF9412-1C..), dimensions in mm

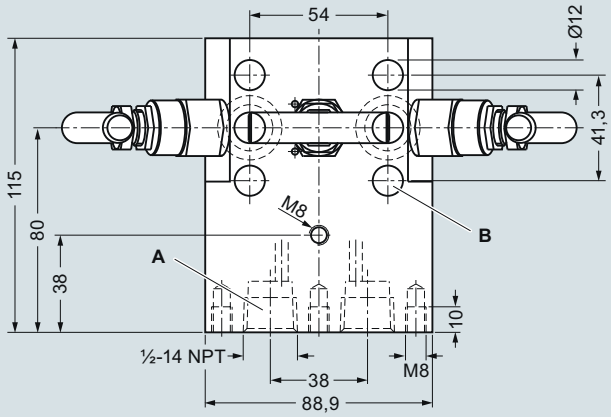

A Process connection: ½-14 NPT
B Transmitter connection: Flange connection EN 61518, form A
Valve design: external spindle thread

3-spindle valve manifold DN 5 (7MF9412-1D..), dimensions in mm

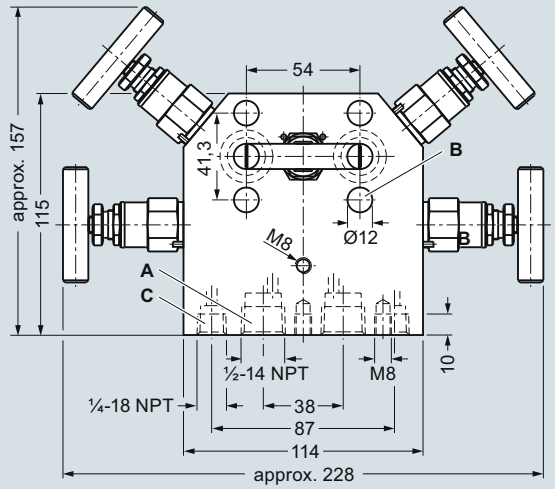

A Process connection: ½-14 NPT
B Transmitter connection: Flange connection to EN 61518, form A
C Vent / test connection: ¼-18 NPT
Valve design: external spindle thread

5-spindle valve manifold DN 5 (7MF9412-1E..), dimensions in mm

© Siemens 2020

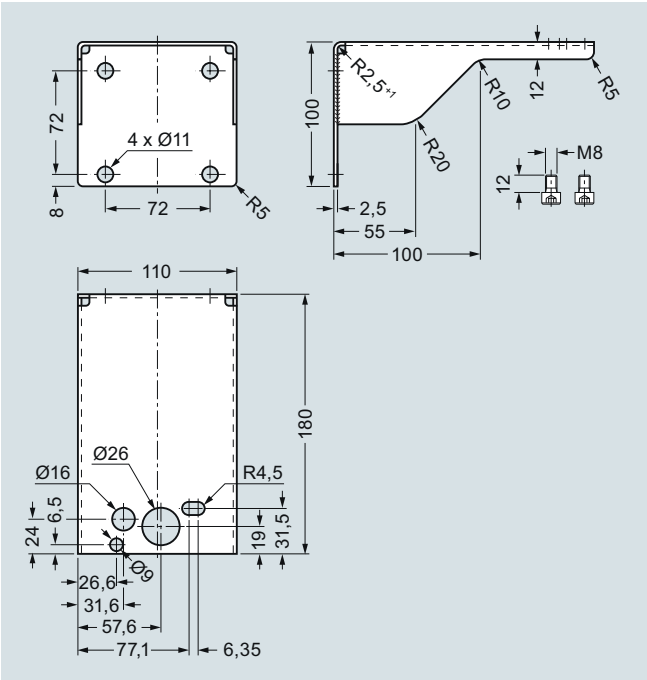

Mounting bracket (7MF9006-6LA)/(M14) for 2-spindle valve manifold, dimensions in mm

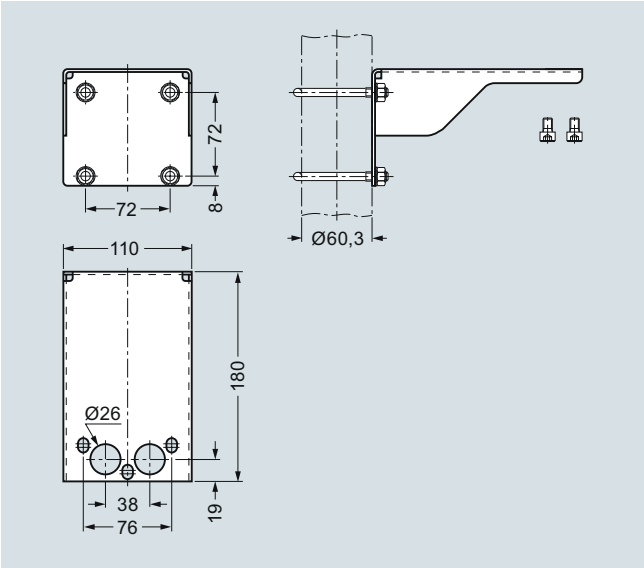

Mounting bracket (7MF9006-6NA)/(M17) for 3-spindle valve manifold, dimensions in mm

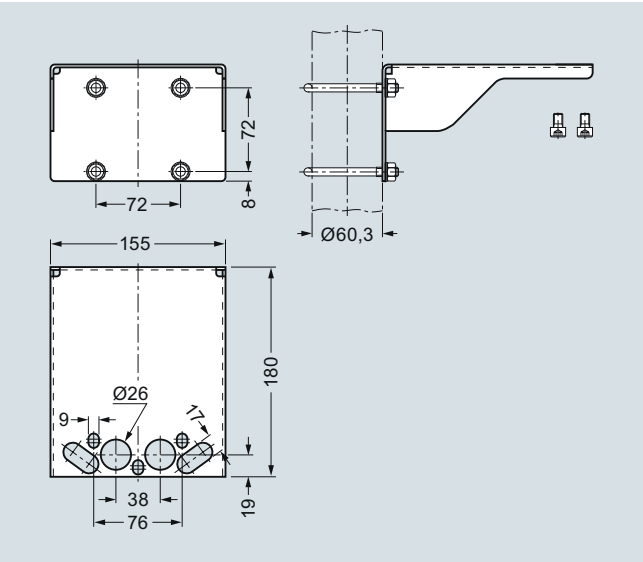

Mounting bracket (7MF9006-6PA)/(M18) for 5-spindle valve manifold, dimensions in mm

Schematics

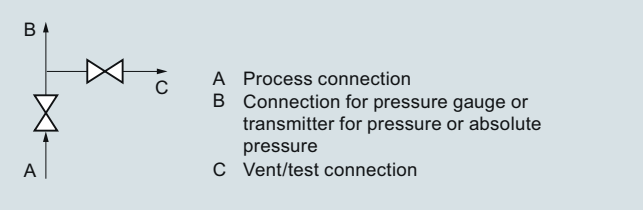

2-spindle valve manifold DN 5 (with rotating sleeve G½ or flange connection), connections

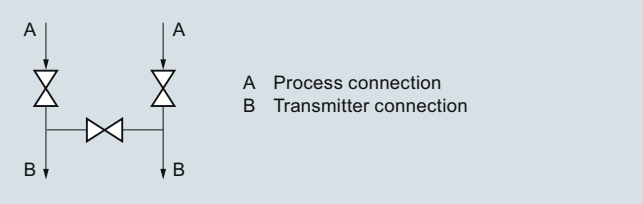

3-spindle valve manifold DN 5, connections

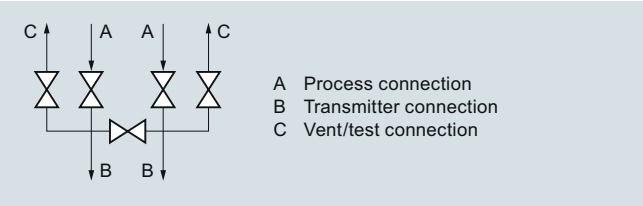

5-spindle valve manifold DN 5, connections

© Siemens 2020

3- and 5-spindle valve manifolds for vertical angular differential pressure lines

Overview

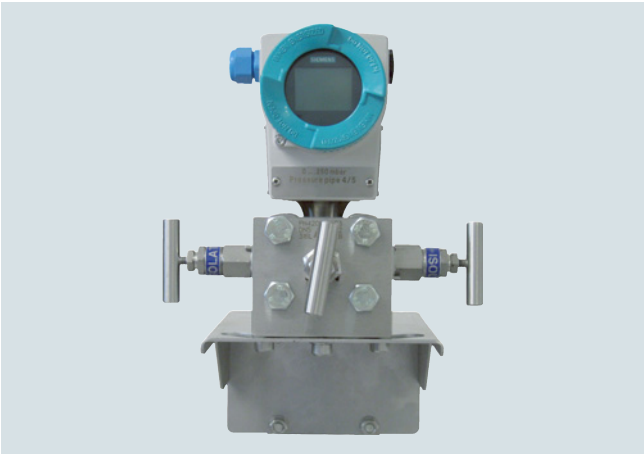

These 3-spindle and 5-spindle valve manifolds 7MF9413-1.. were developed specially for vertical differential pressure lines.

The valve manifolds are used to shut off the differential pressure lines and to check the pressure transmitter zero.

The 5-spindle valve manifold permits venting on the transmitter side and checking of the pressure transmitter characteristic.

Benefits

- For vertical differential pressure lines
- Max. operating pressure 420 bar (6092 psi)
- Transmitters of the DS series can be operated and read from the front.

Application

The 3-spindle and 5-spindle valve manifolds for vertical differential pressure lines are for liquids and gases. The valve manifolds are flanged on the pressure transmitter.

Design

All versions of the spindle valve manifolds have a process connection ½-14 NPT.

The connection for the pressure transmitter is always designed as a flange connection to IEC 61518/DIN EN 61518, form B .

The 2-spindle and the 5-spindle valve manifold have in addition a vent and test connection ¼-18 NPT.

Materials used:

Component	Material	Mat. No.
Enclosure	X 2 CrNiMo 17 13 2	1.4404/316L
Cones	X 6 CrNiMoTi 17 12 2	1.4571/316Ti
Spindles	X 2 CrNiMo 18 10	1.4404/316L
Head parts	X 5 CrNiMo 18 10	1.4401/316
Packings	PTFE	-

Function

Functions of all valve manifolds:

- Shutting off the differential pressure lines
- Checking the pressure transmitter zero

Additional functions of the 2-spindle and 5-spindle valve manifolds through the vent and test connection:

- Venting on the transmitter side
- Checking the pressure transmitter characteristic

Selection and Ordering data	Article No.
Valve manifolds for vertical differential pressure lines ↗	**7MF9413-■■A**
↗ Click on the Article No. for the online configuration in the PIA Life Cycle Portal.	
for liquids and gases for flanging to pressure transmitters for absolute and differential pressure Material: stainless steel, mat. No: 1.4404/316L max. working pressure 420 bar (6092 psi) (order accessory set with Order code), without certificate	
• 3-spindle valve manifold	**1D**
• 5-spindle valve manifold	**1E**
Accessories	
Factory certificate according to EN 10204–2.2	**7MF9000-8AB**
Material inspection certificate EN 10204-3.1	**7MF9000-8AD**

Selection and Ordering data	Order code	Article No.
Further designs[1]		
Please add "**-Z**" to Article No. and specify Order code.		
Accessory set to EN (connection between valve manifold and pressure transmitter)		
4x screws $^{7}/_{16}$-20 UNF x 1¾ inch to ASME B18.2.1; chromized steel 2x flat gaskets made of PTFE, max. permissible 420 bar (6092 psi), 80 °C (176 °F)	**K36**	**7MF9411-5DB**
Accessory set to DIN[2] (connection between valve manifold and pressure transmitter)		
4x screws M10x45 to DIN EN 24014; chromized steel 4x washers Ø 10.5 mm to DIN 125; 2x flat gaskets made of PTFE, max. permissible 420 bar (6092 psi), 80 °C (176 °F); Flange connection with M10 screws only permissible up to PN 160 (2321 psi).	**K16**	**7MF9411-6BB**
Mounting bracket required **for wall mounting** or for securing to mounting rack, with bolts for mounting on valve manifold		
• for valve manifold 7MF9413-1D.	**M17**	**7MF9006-6NA**
• for valve manifold 7MF9413-1E.	**M18**	**7MF9006-6PA**
required **for mounting on 2" standpipe**, with bolts for mounting on valve manifold		
• for valve manifold 7MF9413-1D.	**M19**	**7MF9006-6QA**
Mounting clip		
2 off, to secure mounting bracket to pipe	**M16**	**7MF9006-6KA**
valve manifold 100 bar (1450 psi) suitable for oxygen		
• for valve manifold 7MF9413-1D.	**S13**	
• for valve manifold 7MF9413-1E.	**S14**	
NACE MR-0175-certified incl. inspection certificate 3.1 to EN 10204	**D07**	

1) When ordering accessory set or mounting together with the multiway cock, please use Order code; otherwise use Article No.

2) Flange connections to DIN 19213 only permissible up to PN 160 (2321 psi)!

© Siemens 2020

Accessories

Accessory set (connection between valve manifold and transmitter)

- K36: 4 screws $^{7}/_{16}$-20 UNF x 1¾ inch to ASME B18.2.1, 2 flat gaskets
- K16: 4 screws M10x45 to DIN EN 24014, 4 washers, 2 flat gaskets

Washers Ø 10.5 to DIN 125

Flat gaskets made of PTFE, max. 420 bar (6092 psi), 80 °C (176 °F)

Note: Flange connection with M10 screws only permissible up to PN 160 (2321 psi)!

Mounting bracket for wall mounting or for securing to mounting rack

With bolts for mounting on valve manifold

- M17: For 3-spindle valve manifold
- M18: For 5-spindle valve manifold

Mounting bracket for mounting on 2" standpipe

With bolts for mounting on valve manifold

- M19: For 3-spindle valve manifold

Mounting clips (2 off)

For securing the mounting brackets M17, M18 and M19 to pipe

Valve manifold 100 bar, suitable for oxygen

- For 3-spindle valve manifold
- For 5-spindle valve manifold

Characteristic curves

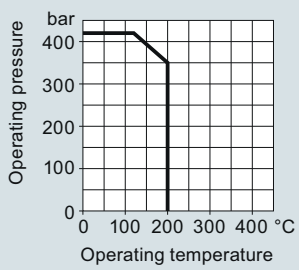

420 bar (6092 psi) at 120 °C (248 °F)
350 bar (5076 psi) at 200 °C (392 °F)

Permissible operating pressure as a function of the permissible operating temperature

Dimensional drawings

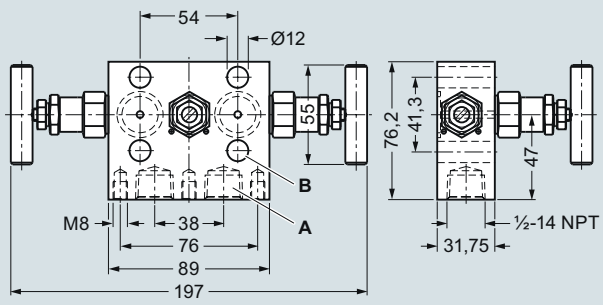

3-spindle valve manifold 7MF9413-1D. for vertical differential pressure lines, dimensions in mm

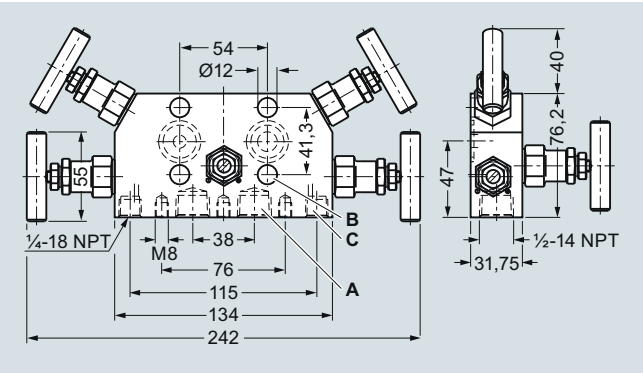

5-spindle valve manifold 7MF9413-1E. for vertical differential pressure lines, dimensions in mm

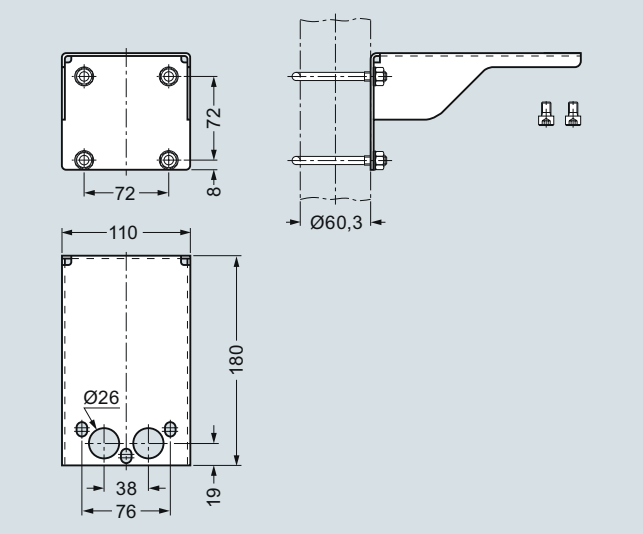

Mounting bracket (7MF9006-6NA)/(M17) for 3-spindle valve manifold, dimensions in mm

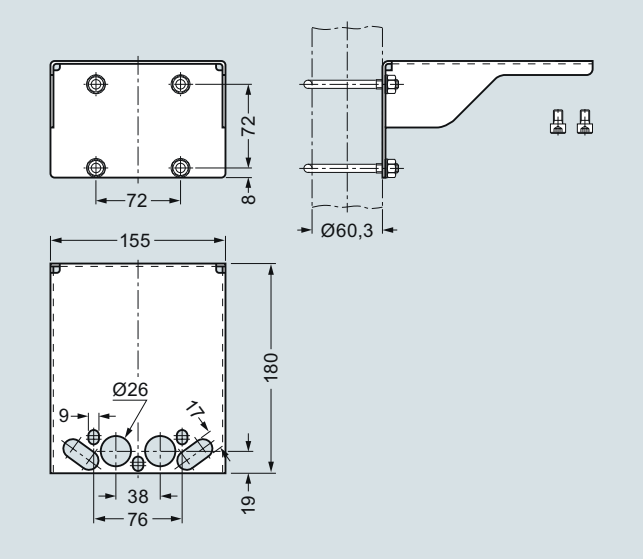

Mounting bracket (7MF9006-6PA)/(M18) for 5-spindle valve manifold, dimensions in mm

© Siemens 2020

3- and 5-spindle valve manifolds for vertical angular differential pressure lines

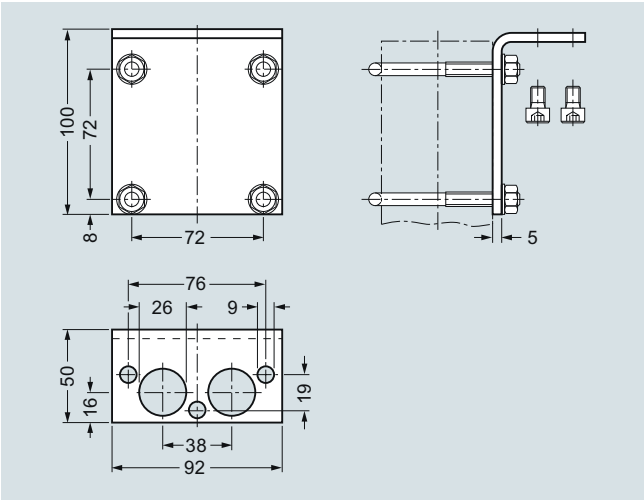

Mounting bracket (7MF9006-6QA)/(M19) for 3-spindle valve manifold, dimensions in mm

Schematics

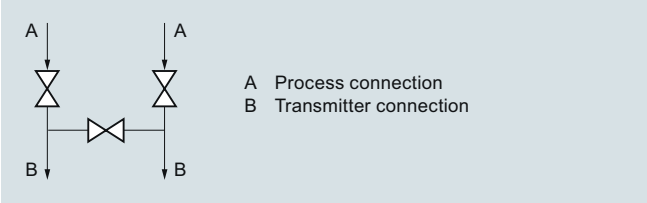

3-spindle valve manifold for vertical differential pressure lines, connections

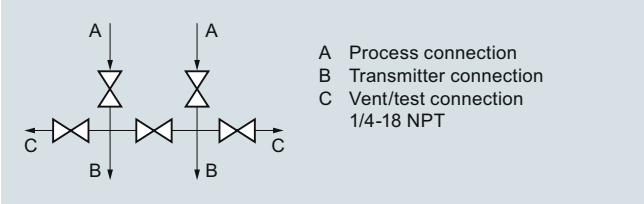

5-spindle valve manifold for vertical differential pressure lines, connections

© Siemens 2020

Overview

The low-pressure multiway cock 7MF9004-4CA/-4DA can be flanged to pressure transmitters for differential pressure.

Benefits

- Robust design
- For liquids and gases
- One-hand operation

Design

The multiway cock has 2 process connections and 2 test connections, which are available in 2 versions (with sealing screws $G^3/_8$ or quick-release couplings). The enclosure is made of hot-pressed brass CuZn39Pb3, CW 614N. Test connections with sealing screws or with self-sealing quick-release couplings.

Note: An accessory set is always required for flanging of the multiway cock to a differential pressure transmitter.

Function

- Shutting off the differential pressure lines
- Testing the pressure transmitter zero
- Testing the pressure transmitter characteristic

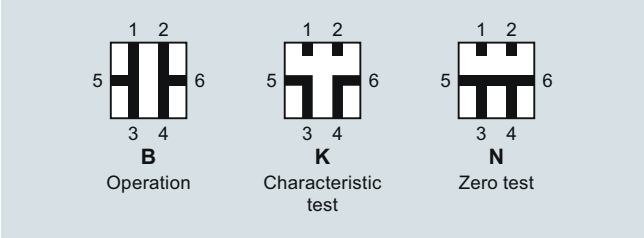

Cock positions; the symbols are printed on the cock

Selection and Ordering data	Article No.
Low-pressure multiway cock for liquids and gases, for flanging to pressure transmitters, max. working pressure 25 bar (363 psi), max. working temperature 60 °C (140 °F) (up to 80 °C (176 °F) for a short time), weight 1.75 kg (without accessory set)	
Test connections	
2x sealing screws $G^3/_8$	**7MF9004-4CA**
2x quick-release couplings	**7MF9004-4DA**
Accessories	
Factory certificate according to EN 10204–2.2	**7MF9000-8AB**
Material inspection certificate to EN 10204-3.1	**7MF9000-8AD**

Selection and Ordering data	Order code	Article No.
Further designs [1]		
Please add "**-Z**" to Article No. and specify Order code.		
Accessory set to EN (required for flanging, weight 0.2 kg)		
4x screws $^7/_{16}$-20 UNF x 1 inch to ASME B18.2.1; chromized steel 2x gaskets made of PTFE, max. permissible temperature 80 °C (176 °F)	**L31**	**7MF9004-5CC**
Accessory set to DIN (required for flanging, weight 0.2 kg)		
4x screws M10x25 to DIN EN 24017; chromized steel 4x washers Ø 10.5 mm to DIN 125; 2x gaskets made of PTFE, max. permissible temperature 80 °C (176 °F)		
• Standard design	**L11**	**7MF9004-6AD**
• Version for oxygen	**L15**	**7MF9004-6AE**
Multiway cock in oil-free and grease-free design BAM-tested lubricant, gasket suitable for oxygen	**S11**	
Mounting bracket required **for wall mounting** or for securing on rack (72 mm grid), made of electrogalvanized sheet-steel, weight 0.85 kg	**M13**	**7MF9004-6AA**

[1] When ordering accessory set or mounting together with the multiway cock, please use Order code; otherwise use Article No.

© Siemens 2020

Accessories

Accessory set for low-pressure multiway cock

- L31: 4 screws $^{7}/_{16}$-20 UNF x 1 inch, 2 flat gaskets
- L11: 4 screws M10x25 to DIN EN 24017, 4 washers, 2 flat gaskets
- L15 (suitable for oxygen): 4 screws M10x25 to DIN EN 24017, 4 washers, 2 flat gaskets

Washers Ø 10.5 to DIN 125

Flat gaskets made of PTFE, max. permissible temperature 80 °C (176 °F)

Multiway cock in oil-free and grease-free design

- S11: BAM-tested lubricant, gasket suitable for oxygen

Mounting brackets

- M13: Required for wall mounting or for securing on rack (72 mm grid); made of electrogalvanized sheet-steel

Options

Test connections
- 2 sealing screws G$^{3}/_{8}$
- 2 quick-release couplings

Characteristic curves

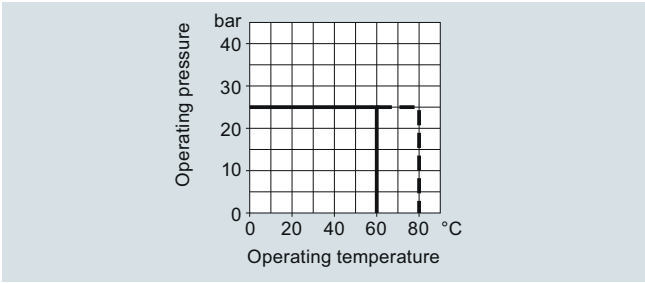

Low-pressure multiway cock, permissible operating pressure as a function of the permissible operating temperature

Dimensional drawings

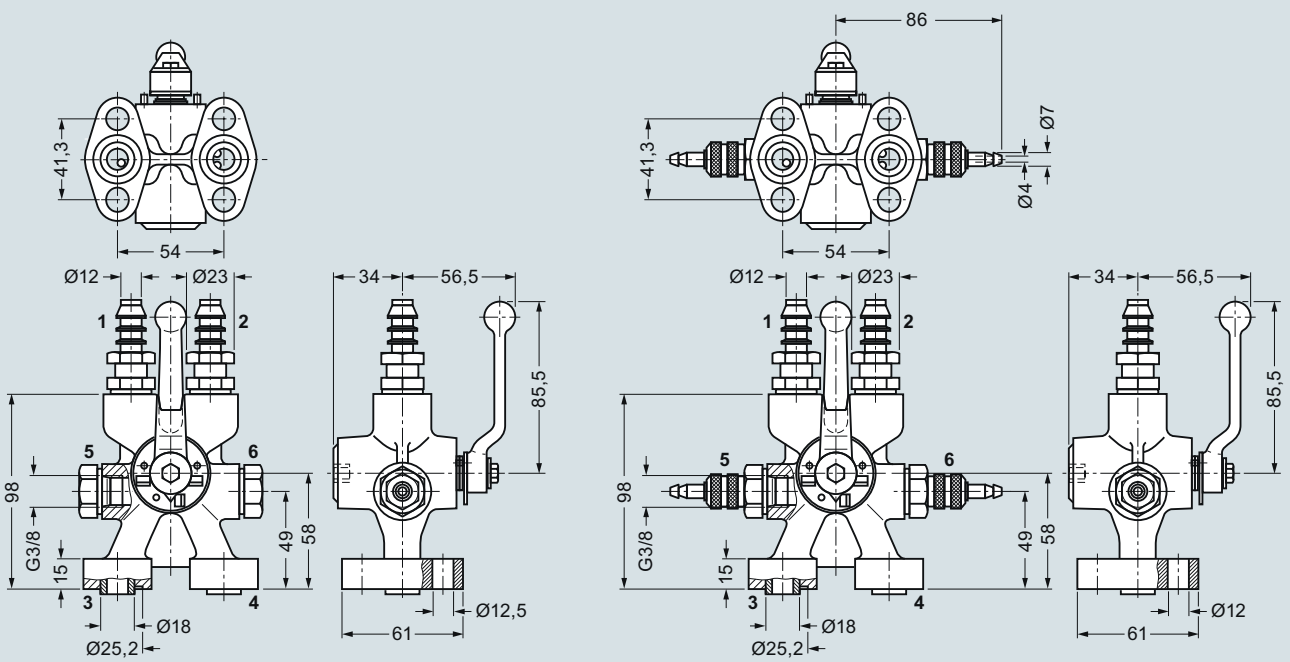

1 and 2 Process connections (hose sleeve, diameter 12 mm)
3 and 4 Transmitter connections (EN 61518, form A)
5 and 6 Text connections (with sealing screws G3/8 or with quick-release couplings

Low-pressure multiway cock 7MF9004-4CA/-4DA for direct flanging to pressure transmitters for differential pressure, dimensions in mm

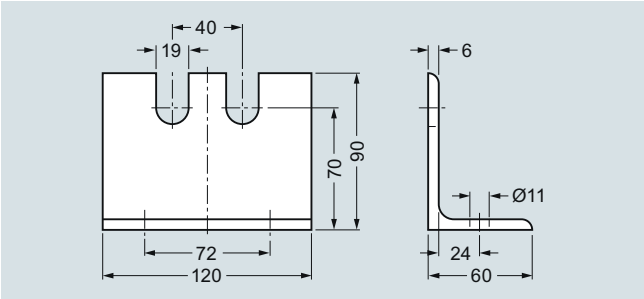

Mounting bracket 7MF9004-6AA (M13), dimensions in mm

© Siemens 2020

Overview

The oval flange 7MF9408-2C. for pressure transmitters for absolute pressure and differential pressure has a ½-14 NPT female thread and is designed for max. operating pressure 400 bar (5800 psi).

Accessories

Accessory set for oval flange

- E36: 2 screws $^{7}/_{16}$-20 UNF x 1½ inch to ASME B18.2.1, 1 flat gasket
- E34: 2 screws $^{7}/_{16}$-20 UNF x 1½ inch to ASME B18.3, 1 O-ring (FPM 90)
- E13: 2 screws M10x40 to DIN EN 4762, 2 washers, 1 O-ring (FPM 90)
- E16: 2 screws M10x40 to DIN EN ISO 4762, 2 washers, 1 flat gasket

Washers Ø 10.5 to DIN 125

Flat gaskets made of PTFE, max. 420 bar (6092 psi), 80 °C (176 °F)

O-ring to DIN 3771, 20 x 2.65 – S – FPM90, max. 420 bar (6092 psi), 120 °C (248 °F)

Note: M10 screws only permissible up to PN 160 (2321 psi)!

Selection and Ordering data	Article No.
Oval flange with female thread ½-14 NPT, max. working pressure 420 bar (6092 psi), flange connection to IEC 61518/DIN EN 61518, form A	
Material	
P250GH, mat. No.: 1.0460	**7MF9408-2CE**
X 2 CrNiMo 17 13 2, mat. No. 1.4404/316L	**7MF9408-2CL**

Selection and Ordering data	Order code	Article No.
Further designs[1)] Please add "**-Z**" to Article No. and specify Order code.		
Accessory set to EN		
2x screws $^{7}/_{16}$-20 UNF x 1½ inch to ASME B 18.2.3; chromized steel 1x flat gasket made of PTFE, max. permissible 420 bar (6092 psi), 80 °C (176 °F)	**E36**	**7MF9408-5DA**
2x screws $^{7}/_{16}$-20 UNF x 1½ inch to ASME B 18.2.3; chromized steel 1x O-ring to DIN 3771, 20 x 2.65 - S - FPM90, max. permissble 420 bar (6092 psi), 120 °C (248 °F)	**E34**	**7MF9408-5CA**
Accessory set to DIN		
2x screws M10x40 to DIN EN ISO 4762; chromized steel 2x washers Ø 10.5 mm to DIN 125; 1x O-ring to DIN 3771, 20 x 2.65 - S - FPM90, max. permissble 160 bar (2321 psi), 120 °C (248 °F)[2)]	**E13**	**7MF9408-6AA**
2x screws M10x40 to DIN EN ISO 4762; chromized steel 2x washers Ø 10.5 mm to DIN 125; 1x flat gasket made of PTFE, max. permissible 160 bar (2321 psi), 80 °C (176 °F)[2)]	**E16**	**7MF9408-6BA**
NACE MR-0175-certified incl. inspection certificate 3.1 to EN 10204	**D07**	

1) When ordering accessory set together with the oval flange, please use Order code; otherwise use Article No.

2) Flange connections with M10 screws only permissible up to PN 160 (2321 psi)

Dimensional drawings

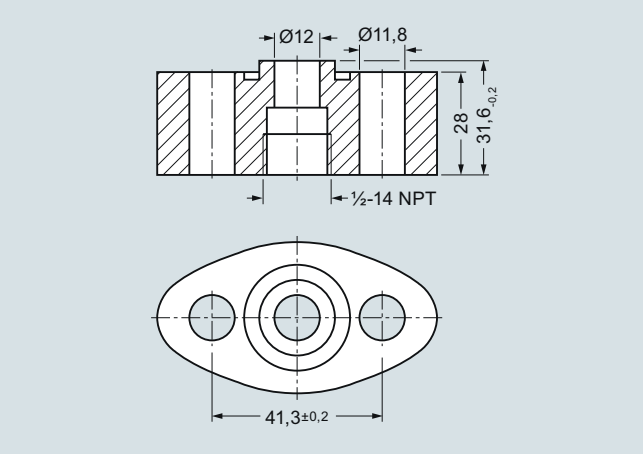

Oval flange 7MF9408-2C., dimensions in mm

© Siemens 2020

Adapters

Overview

Adapters enable e.g. a transition from medium connections with NPT thread to shut-off valves to DIN 16270 ... 16272 or pipes in conjunction with a connection gland (e.g. 7MF9008).

Design

The adapters are made of X 6 CrNiMoTi 17 12 2, mat. No. 1.4571 and available in 3 versions

- Thread ¼-18 NPT and connection shank G½ to DIN EN 837-1
- Thread ½-14 NPT and connection shank G½ to DIN EN 837-1
- Thread ½-14 NPT and thread ½-14 NPT

Selection and Ordering data	Article No.
Adapters Max. operating pressure: 689 bar (10 000 psi), Weight: 0.2 kg	
with thread ¼-18 NPT – G½	**7MF9001-1AA**
with thread ½-14 NPT – G½	**7MF9001-1CA**
with thread ½-14 NPT – ½-14 NPT	**7MF9001-1DA**
with thread ½-14 NPT – M20 x 1.5	**7MF9001-1EA**
with pipe union with ferrule 12 S, max. operating pressure 630 bar (9 100 psi), ∅ 12 mm – ½-14 NPT	
• 9 SMnPb 28, mat. No. 1.0718	**7MF9008-1CA**
• X 6 CrNiMoTi 17 122, mat. No. 1.4571	**7MF9008-1CB**
with pipe union with ferrule 14 S, max. operating pressure 630 bar (9 100 psi), ∅ 14 mm – ½-14 NPT	
• 9 SMnPb 28, mat. No. 1.0718	**7MF9008-1CC**
• X 6 CrNiMoTi 17 122, mat. No. 1.4571	**7MF9008-1CD**

Dimensional drawings

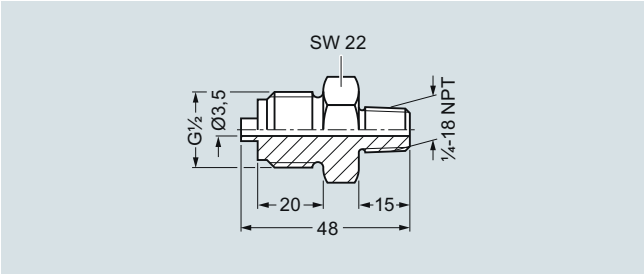

Adapter with thread ¼-18 NPT and connection shank G½ (7MF9001-1AA), dimensions in mm

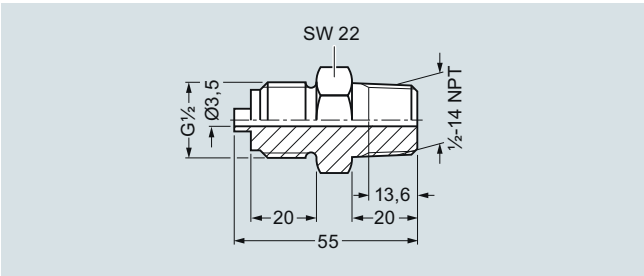

Adapter with thread ½-14 NPT and connection shank G½ (7MF9001-1CA), dimensions in mm

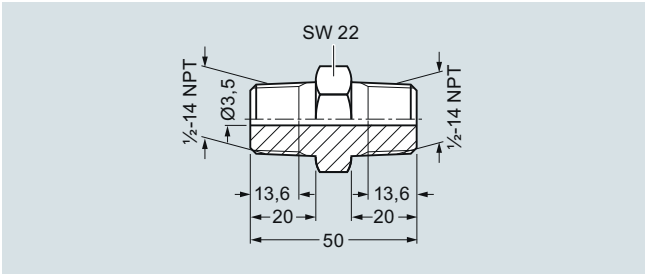

Adapter with thread ½-14 NPT and thread ½-14 NPT (7MF9001-1DA), dimensions in mm

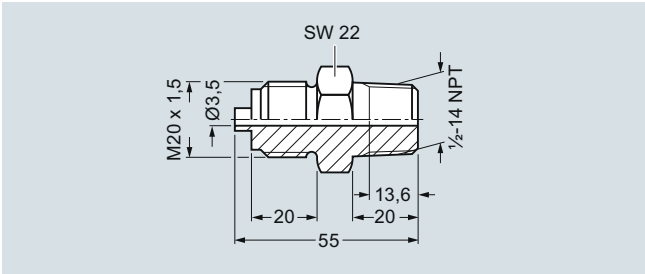

Adapter with thread ½-14 NPT and connection shank M20 x 1.5 (7MF9001-1EA), dimensions in mm

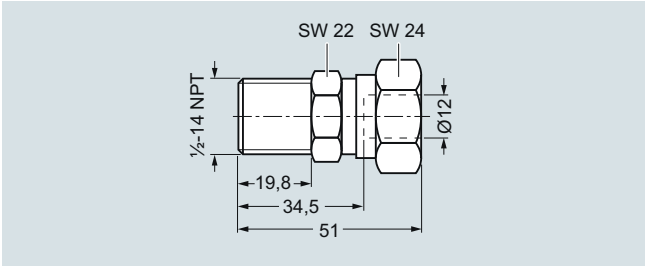

Adapter with pipe union with ferrule 12 S, ∅ 12 mm and thread ½-14 NPT (7MF9008-1CA and -1CB), dimensions in mm

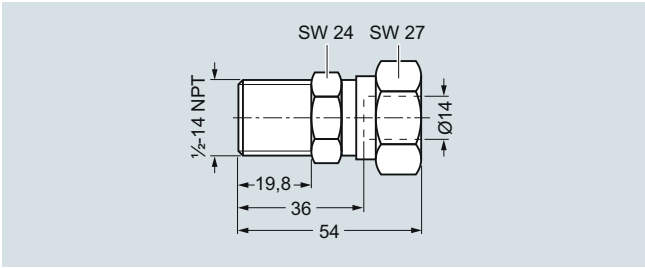

Adapter with pipe union with ferrule 14 S, ∅ 14 mm and thread ½-14 NPT (7MF9008-1CC and -1CD), dimensions in mm

© Siemens 2020

Overview

Connection glands to connect medium or differential pressure lines to collars G½ to DIN EN 837-1

- For rated pressures up to PN 630 (9137psi)
- For oxygen only up to PN 250 (3626 psi)

Selection and Ordering data		Article No.
Connection screwed gland for pipelines (weight 0.2 kg)		
Material	Design	
11SMn30 (mat. No. 1.0715)	Standard	**7MF9008-1GA**
X 6 CrNiMoTi 17 12 2 (mat. No. 1.4571/316Ti)	Standard	**7MF9008-1GB**
X 6 CrNiMoTi 17 12 2 (mat. No. 1.4571/316Ti)	Grease-free	**7MF9008-1GC**

Dimensional drawings

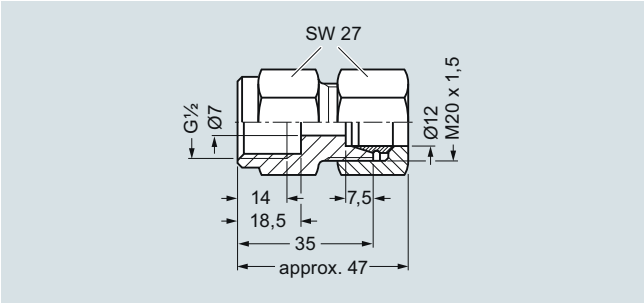

Connection gland 7MF9008-1G., dimensions in mm

© Siemens 2020

Connection parts G 1/2

Overview

Connection parts G½ for pressure gauges and shut-off fittings are available in 3 versions:

- Nipple connection
- Clamping sleeve
- Collar connection piece

Selection and Ordering data		Article No.
Adapters G½ for pressure gauges and shut-off fittings		
Nipple connection G½ to DIN 16284 (union nut with nipple and gasket); max. working pressure 400 bar (5802 psi); weight 0.1 kg; connection: G½ to DIN EN 837-1; Female thread G½		
Material	Mat. No.	
CuZn39Pb3	CW 614N	**M56340-A0001**
Union nut 9 SMn 28 k Nipple: RSt 37-2	 1.0715 1.0037	**M56340-A0002**
Union nut X 8 CrNiS 18 9 Nipple: X 6 CrNiMoTi 17 12 2	 1.4305 1.4571/316Ti	**M56340-A0003**
Nipple connection M20 x 1.5 to DIN 16284 (union nut with nipple and gasket); max. working pressure 400 bar (5802 psi); weight 0.1 kg; connection: M20 x 1.5 to DIN EN 837-1; Female thread M20 x 1.5		
Material	Mat. No.	
Union nut X 8 CrNiS 18 9 Nipple: X 6 CrNiMoTi 17 12 2	 1.4305 1.4571/316Ti	**M56340-A0008**
Clamping sleeve G½ to DIN 16283; max. working pressure 400 bar (5802 psi); weight 0.1 kg; Connections: G½ to DIN EN 837-1; Female thread: G½ right-hand G½ left-hand		
Material	Mat. No.	
CuZn39Pb3	CW614N	**M56340-A0004**
9 SMn 28 k	1.0715	**M56340-A0005**
Collar-adapter max. working pressure; weight 0.1 kg; Connections: G½ to DIN EN 837-1; Male thread: G½, G½		
Material	Mat. No.	
CuZn39Pb3	CW614N	**M56340-A0006**
9 SMn 28 k	1.0715	**M56340-A0007**

Dimensional drawings

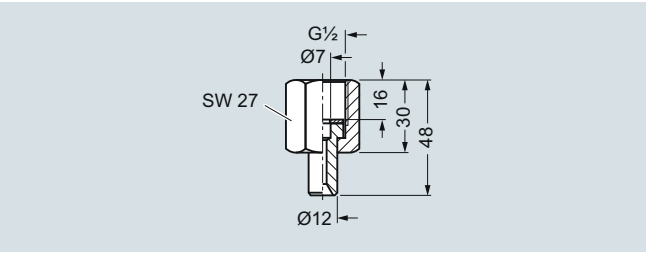

Nipple connection G½ (M56340-A0001 to -A0003), dimensions in mm

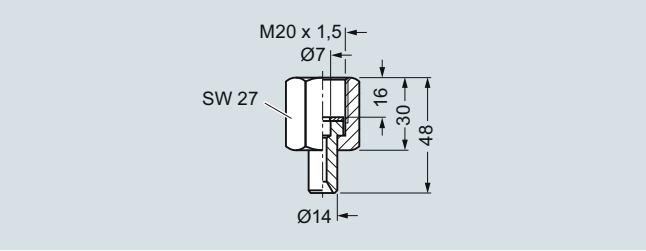

Nipple connection M20 x 1.5 (M56340-A0008), dimensions in mm

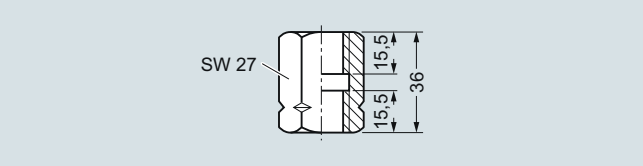

Clamping sleeve (M56340-A0004/-A0005), dimensions in mm

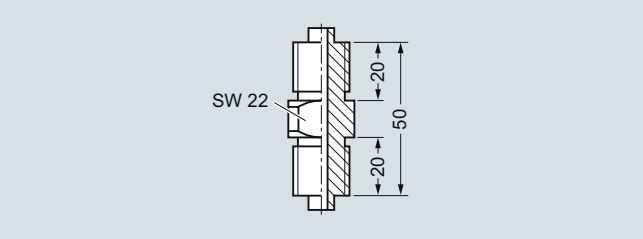

Collar connection piece (M56340-A0006/-A0007), dimensions in mm

© Siemens 2020

Overview

Water traps protect pressure gauges and shut-off fittings from heating up (e.g. by steam) by the water column produced by the water trap.

The max. working temperature is 120 °C (248 °F) at 100 bar (1450 psi), 300 °C (572 °F) at 80 bar (1160 psi) or 400 °C (752 °F) at 63 bar (914 psi). If the temperature of the measured medium is higher, a sufficiently long line has to be connected upstream of the trap to enable heat dissipation.

Design

The water traps are available in U shape (type B) or circular shape (type D) to DIN 16282. They have a weld-on end Ø 20 mm × 2.6 mm on the measurement side. The connection on the device side is a clamping sleeve G½ to DIN 16283.

The water traps are made of steel (P250GH) or stainless steel (X 6 CrNiMoTi 17 12 2)

Water traps are designed as standard for max. operating temperature 120 °C (248 °F) at max. operating pressure 100 bar (1450 psi) (300 °C (572 °F) at 80 bar (1160 psi), 400 °C (752 °F) at 63 bar (914 psi). Water traps for higher operating pressures and temperatures are available on request.

Selection and Ordering data		Article No.
Water traps for pressure gauges and pressure transmitters, max. working temperature 120 °C (248 °F), max. working pressure 100 bar (1450 psi) (or 300 °C (572 °F) at 80 bar (1160 psi), or 400 °C (752 °F) at 63 bar (914 psi)), weight 0.7 kg		
Water trap B to DIN 16282		
Material	Mat. No.	
P235GH	1.0345	**M56340-A0043**
X 6 CrNiMoTi 17 12 2	1.4571/316Ti	**M56340-A0061**
Water trap D to DIN 16282		
Material	Mat. No.	
P235GH	1.0345	**M56340-A0045**
X 6 CrNiMoTi 17 12 2	1.4571/316Ti	**M56340-A0063**

Dimensional drawings

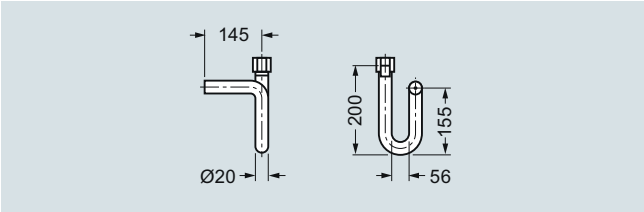

Water traps, type B, M56340-A0043/-A0061, dimensions in mm

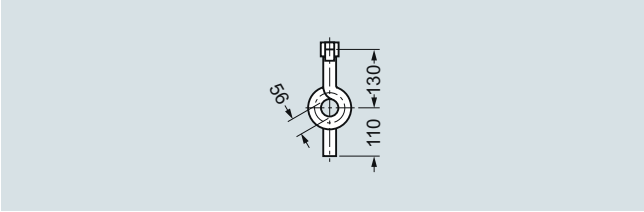

Water traps, type D, M56340-A0045/-A0063, dimensions in mm

Overview

The sealing rings to EN 837-1 are required to seal measuring instruments for pressure with the process connection G½B.

Dimensional drawings

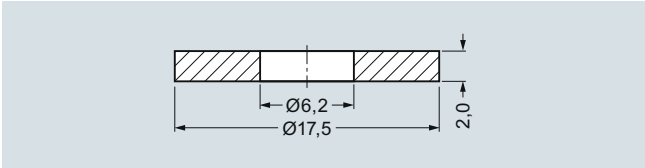

Sealing ring 7MF9007-7A. to EN 837-1, dimensions in mm

Selection and Ordering data	Article No.
Sealing ring to EN 837-1 for thread G½ made of (packing unit 100 pcs)	
• Copper	**7MF9007-7AA**
• Soft iron	**7MF9007-7AB**
• Stainless steel, mat.-No. 1.4571	**7MF9007-7AC**
• PTFE	**7MF9007-7AD**
Accessories	
Factory certificate according to EN 10204–2.2	**7MF9000-8AB**
Material inspection certificate to EN 10204-3.1	**7MF9000-8AD**

© Siemens 2020

Pressure surge reducers

Overview

The pressure surge reducer protects the pressure gauge against damage, premature wear and tear and inaccurate/fluctuating indications.

Application

The pressure reducer is used when pulsations occur in the measured medium (e.g. in slow-running vapor engines, piston pumps and compressors), or if drastic fluctuations are likely to occur in the measured medium (e.g. in hydraulic presses and tensile testing machines).

Design

- Enclosure made of brass or stainless steel (mat. no. 1.4571)
- Adjustable nozzle
- Sleeve for connection to the measuring instrument
- Pin for connection to supply lead

Selection and Ordering data

			Article No.
Pressure surge reducer Weight approx. 0.21 kg			
Material	Full-scale value	Weight approx. in kg	
Brass	250 bar (3626 psi)	0.21	**M56340-A54**
Stainless steel	600 bar (8702 psi)	0.21	**M56340-A59**

Dimensional drawings

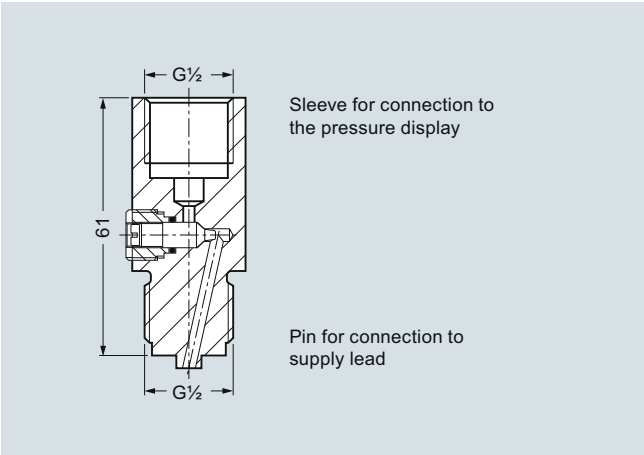

Pressure surge reducer, dimensions in mm

© Siemens 2020

Overview

Primary shut-off valves are available in the following versions:

- For non-corrosive liquids, gases and vapors
- For corrosive liquids and gases
- Grease-free for oxygen

The shut-off valves are available in various materials and with various connections (see Selection and Ordering data)

Characteristic curves

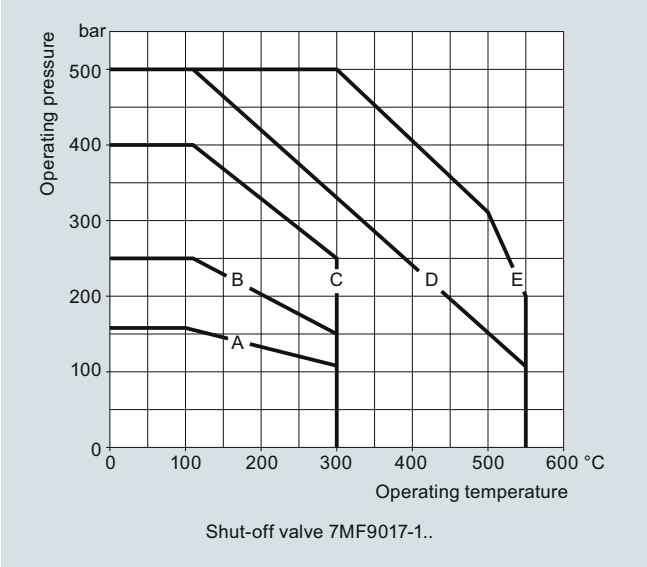

Shut-off valve 7MF9017-1.., permissible working pressure as a function of the permissible working temperature

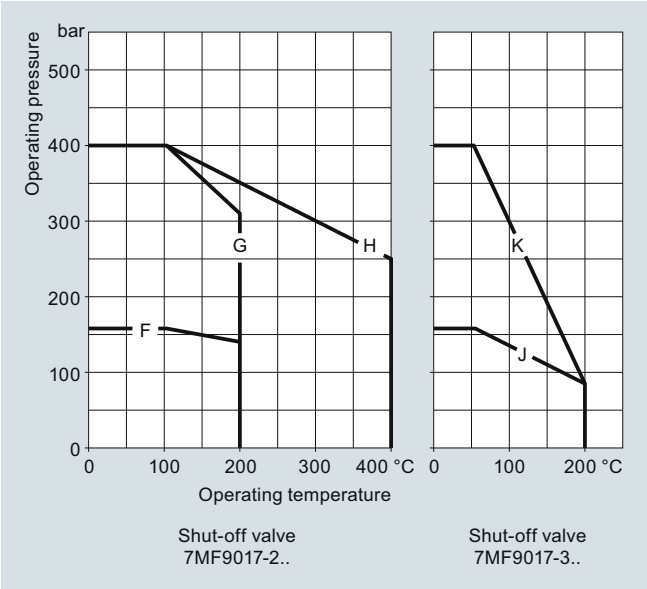

Shut-off valve 7MF9017-2.. and -3.., permissible working pressure as a function of the permissible working temperature

Dimensional drawings

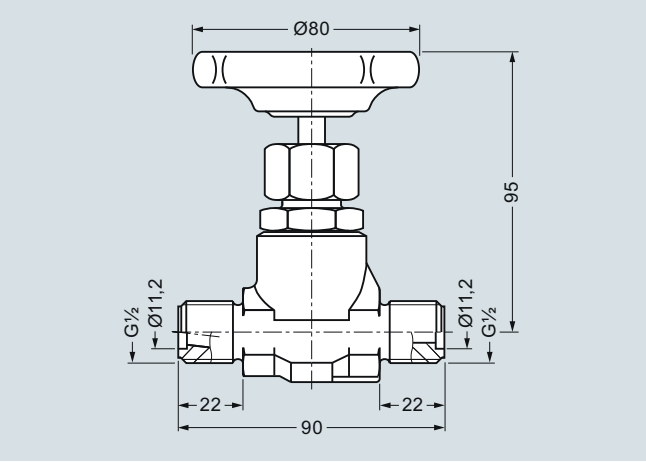

Shut-off valve 7MF9017–1A., dimensions in mm

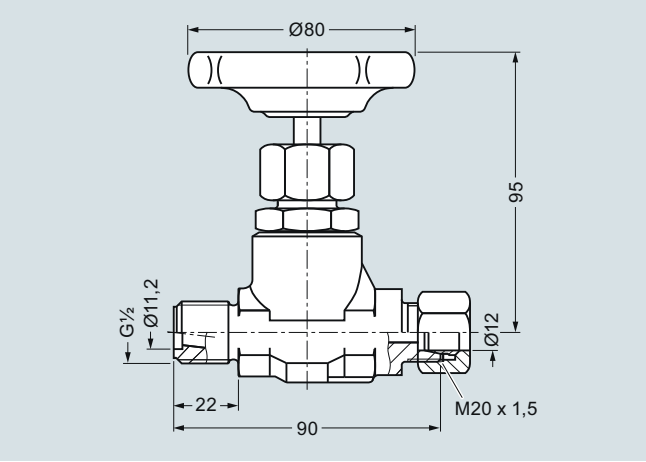

Shut-off valve 7MF9017-1B. and -2B., dimensions in mm

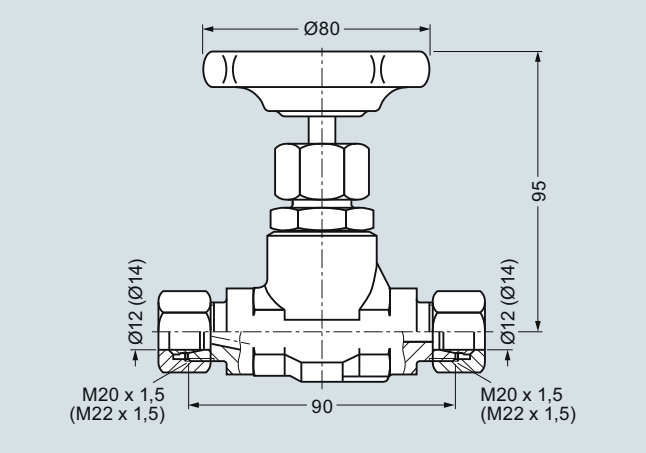

Shut-off valves 7MF9017-1C., -1D. and -2C., dimensions in mm

© Siemens 2020

Primary shut-off valves

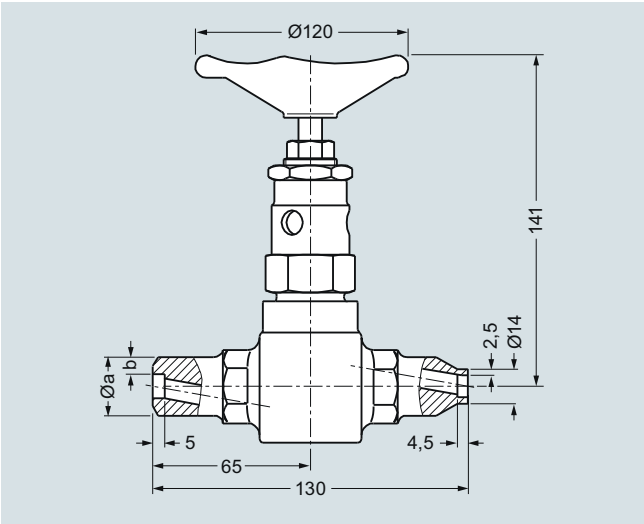

Shut-off valves 7MF9017-, dimensions in mm

Ø A x b	7MF9017-
14 mm x 2.5 mm	1F. and 1G.
21.3 mm x 6.3 mm	1H. and 2H.
24 mm x 7.1 mm	1J., 1K. and 2J.

Selection and Ordering data

Primary shut-off valves, without certificate

Max. working pressure	Charac-teristic[1]	Material	Mat. No.	Spindle thread	Connections	Approx. weight kg	Article No.
Shut-off valve for non-aggressive liquids, gases and vapors							↗ 7MF9017-1 ■ A
↗ Click on the Article No. for the online configuration in the PIA Life Cycle Portal.							
160 bar (2321 psi)	A	P250GH	1.0460	Internal	Threaded socket G½ form R, DIN 19207	0.8	A
160 bar (2321 psi)	A	P250GH	1.0460	Internal	Threaded socket G½ form R, DIN 19207 DIN 19207 and pipe union with ferrule for pipe ∅ 12 mm, S series	0.8	B
400 bar (5800 psi)	C	P250GH	1.0460	Internal	Pipe union with ferrule for pipe ∅ 12 mm, S series	1	C
400 bar (5800 psi)	C	P250GH	1.0460	Internal	Pipe union with ferrule for pipe ∅ 14 mm, S series	1	D
500 bar (7252 psi)	D	16 Mo 3	1.5415	External	Welding sleeves ∅ 14 mm × 2.5 mm	1.6	F
500 bar (7252 psi)	E	11 CrMo 9 10	1.7383	External	Welding sleeves ∅ 14 mm × 2.5 mm	1.6	G
500 bar (7252 psi)	D	16 Mo 3	1.5415	External	Welding sleeves ∅ 21.3 mm × 6.3 mm and ∅ 14 mm × 2.5 mm	1.6	H
500 bar (7252 psi)	D	16 Mo 3	1.5415	External	Welding sleeves ∅ 24 mm × 7.1 mm and ∅ 14 mm × 2.5 mm	1.6	J
500 bar (7252 psi)	E	11 CrMo 9 10	1.7383	External	Welding sleeves ∅ 24 mm × 7.1 mm and ∅ 14 mm × 2.5 mm	1.6	K
Shut-off valve for aggressive liquids and gases							↗ 7MF9017-2 ■ A
160 bar (2321psi)	F	X 6 CrNiMoTi 17 12 2	1.4571/ 316Ti	Internal	Threaded socket G½ form R, DIN 19207 DIN 19207 and pipe union with ferrule for pipe ∅ 12 mm, S series	0.8	B
400 bar (5800 psi)	G	X 6 CrNiMoTi 17 12 2	1.4571/ 316Ti	Internal	Pipe union with ferrule for pipe ∅ 12 mm, S series	1	C
400 bar (5800 psi)	H	X 6 CrNiMoTi 17 12 2	1.4571/ 316Ti	External	Welding sleeves ∅ 21.3 mm × 6.3 mm and ∅ 14 mm × 2.5 mm	1.6	H
400 bar (5800 psi)	H	X 6 CrNiMoTi 17 12 2	1.4571/ 316Ti	External	Welding sleeves ∅ 24 mm × 7.1 mm and ∅ 14 mm × 2.5 mm	1.6	J
Accessories							
Factory certificate according to EN 10204–2.2							**7MF9000-8AB**
Material inspection certificate EN 10204-3.1							**7MF9000-8AD**

[1] See Figure "Permissible working pressure as a function of the permissible working temperature"

© Siemens 2020

Overview

The compensation vessels prevent the level difference which occurs with pressure changes in the pressure lines and which falsifies the measurement.

According to DIN 19211, the temperature in the compensation vessel must be assumed to be 50 K less than the steam temperature in the pipe when calculating the wall thicknesses. This is because the temperature in the compensation vessel during operation can only rise up to the saturated steam temperature.

A material inspection certificate A to EN 10204-3.1 is available for the materials from which the compensation vessels are made.

Characteristic curves

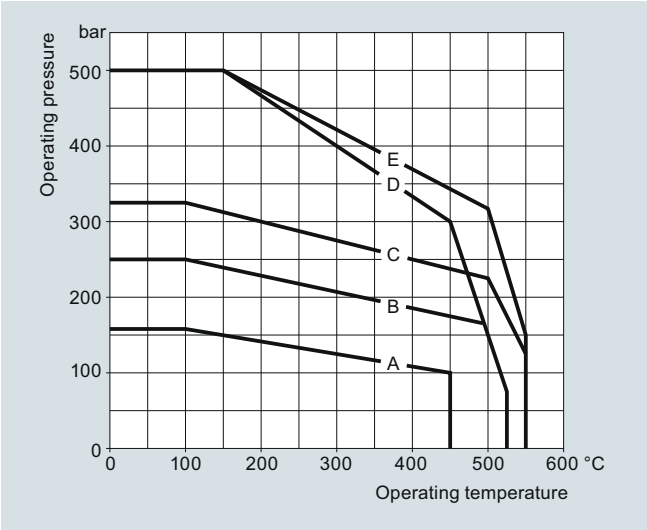

Permissible operating pressure as a function of the permissible operating temperature

Dimensional drawings

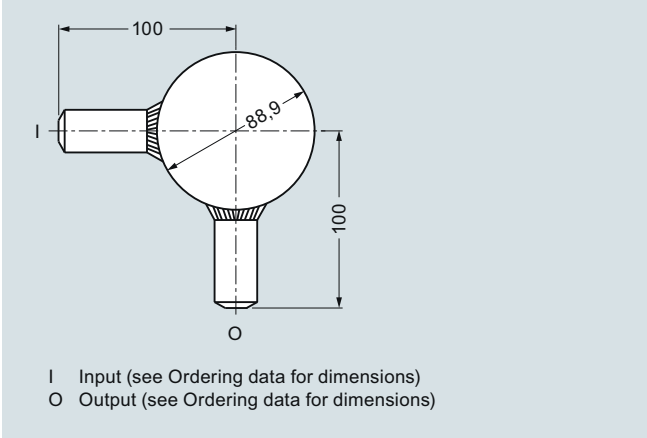

Compensation vessel 7MF9015-1.., dimensions in mm

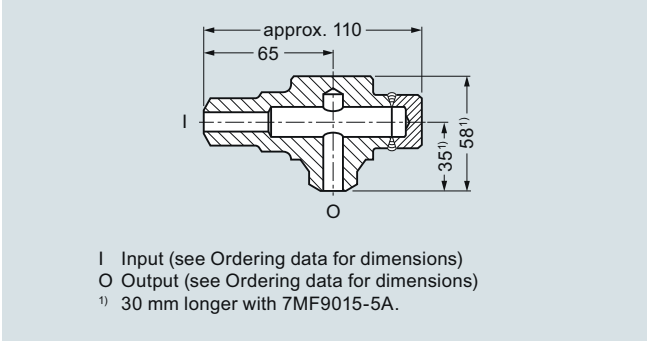

Compensation vessel 7MF9015-5.., dimensions in mm

Selection and Ordering data

Compensation vessel, without certificate

Max. working pressure	Characteristic[1]	Material	Mat. No.	Connections Input	Output	Approx. contents cm³	Approx. weight kg	Article No. ↗ 7MF9015- ■■A
↗ Click on the Article No. for the online configuration in the PIA Life Cycle Portal.								
160 bar (2321 psi)	A	16 Mo 3	1.5415	Threaded socket G½, form R, DIN 19207	Threaded socket G½, form V, DIN 19207	250	0.8	**1 A**
250 bar (3626 psi)	B	16 Mo 3	1.5415	Welding sleeve ∅ 21.3 mm × 6.3 mm	Welding sleeve ∅ 21.3 mm × 6.3 mm	250	0.8	**1 B**
250 bar (3626 psi)	B	16 Mo 3	1.5415	Welding sleeve ∅ 24 mm × 7.1 mm	Welding sleeve ∅ 24 mm × 7.1 mm	250	1	**1 C**
500 bar (7252 psi)	E	11 CrMo 9 10	1.7383	Welding sleeve ∅ 24 mm × 7.1 mm	Welding sleeve ∅ 24 mm × 7.1 mm	170	1	**1 D**
250 bar (3626 psi)	B	16 Mo 3	1.5415	Welding sleeve ∅ 33.7 mm × 4.5 mm	Welding sleeve ∅ 24 mm × 7.1 mm	700	0.7	**1 E**
160 bar (2321 psi)	A	16 Mo 3	1.5415	Threaded socket G½, form R, DIN 19207	Threaded socket G½, form V, DIN 19207	20	1.6	**5 A**
500 bar (7252 psi)	D	16 Mo 3	1.5415	Welding sleeve ∅ 21.3 mm × 6.3 mm	Welding sleeve ∅ 21.3 mm × 6.3 mm	20	1.6	**5 B**
500 bar (7252 psi)	D	16 Mo 3	1.5415	Welding sleeve ∅ 24 mm × 7.1 mm	Welding sleeve ∅ 24 mm × 7.1 mm	20	1.6	**5 C**
500 bar (7252 psi)	E	11 CrMo 9 10	1.7383	Welding sleeve ∅ 24 mm × 7.1 mm	Welding sleeve ∅ 24 mm × 7.1 mm	20	1.6	**5 D**

Accessories

Factory certificate according to EN 10204–2.2	**7MF9000-8AB**
Material inspection certificate EN 10204-3.1	**7MF9000-8AD**

[1] See Figure "Permissible working pressure as a function of the permissible working temperature"

© Siemens 2020

Overview

Connection parts are available in the following versions:

- Threaded flange pair G½ with stainless steel gasket
- Nipple G½ form V to DIN 19207
- Union nut G½ made of C 35 to DIN 16284
- Gasket B½ (grooved) to DIN 19207

All connection parts are also available grease-free for oxygen.

Selection and Ordering data	Article No.
Threaded flange pair G½	
• with stainless steel gasket	**7MF9007-4CA**
• grease-free for oxygen, with stainless steel gasket	**7MF9007-4DA**
Scope of delivery:	
2x threaded flanges G½ to DIN 19207; material: P250GH (mat. No. 1.0460)	
4x hexagon screws M10x45 to DIN EN 24014; Material: C35E (mat. No. 1.1181)	
4x hexagon screws M10x50 to DIN EN 24032	
1x gasket G½ (7MF9007-6BA) grooved, to DIN 19207; Material: X 6 CrNiMoTi 17 12 2 (mat. No. 14571/316Ti)	
Only for 7MF9007-4CA!	
1x gasket G½ (7MF9k007-6CA), grease-free for oxygen, grooved, to DIN 19207; Material: X 6 CrNiMoTi 17 12 2 (mat. No. 14571/316Ti)	
Only for 7MF9007-4DA!	
Nipple G½	
to DIN 19207	
• Material: 16 Mo 3 (mat. No. 1.5415)	**7MF9007-4KA**
• grease-free for oxygen, Material: X 6 CrNiMoTi 17 12 2 (mat. No. 1.4571/316Ti)	**7MF9007-4LA**
Union nut G½	
to DIN 16284	
• Material: C35E (mat. No. 1.1181)	**7MF9007-4MA**
• grease-free for oxygen, Material: X 6 CrNiMoTi 17 12 2 (mat. No. 1.4571/316Ti)	**7MF9007-4NA**
Gasket G½	
to DIN 19207, grooved	
• Material: X 6 CrNiMoTi 17 12 2 (mat. No. 1.4571/316Ti)	**7MF9007-6BA**
• grease-free for oxygen, Material: X 6 CrNiMoTi 17 12 2 (mat. No. 1.4571/316Ti)	**7MF9007-6CA**

Dimensional drawings

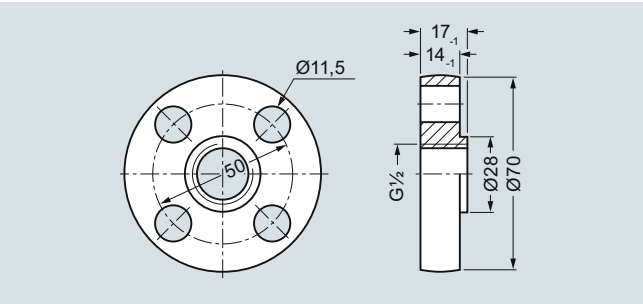

Threaded flange 7MF9007-4CA/-4DA, dimensions in mm

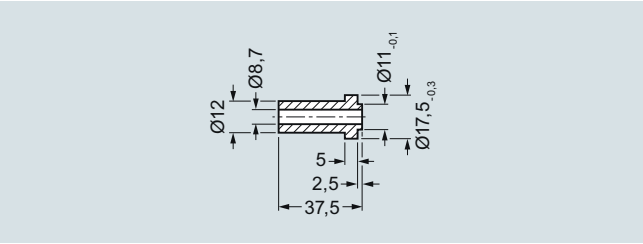

Nipple G½ 7MF9007-4KA/-4LA, dimensions in mm

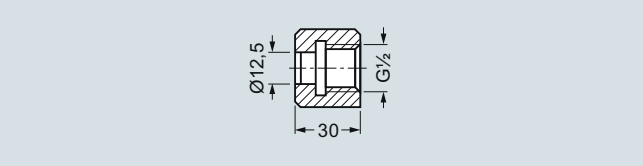

Union nut G½ 7MF9007-4MA/-4NA, dimensions in mm

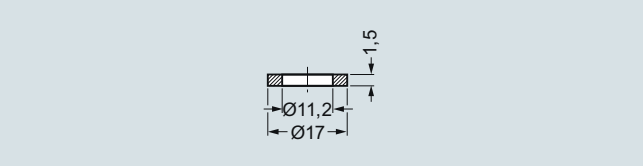

Gasket 7MF9007-6BA/-6CA, dimensions in mm

© Siemens 2020

2/2 Product overview

Temperature sensors
2/9 Technical description
2/34 Detailed product overview
2/40 Ordering examples

SITRANS TS100
2/41 Cable version, mineral-insulated

SITRANS TS200
2/44 Compact version, mineral-insulated

SITRANS TS300
For food, pharmaceuticals and biotechnology
2/47 - Modular design
2/51 - Clamp-on design

SITRANS TS500
Tubular thermowells
2/55 Type 2, without process connection
2/60 Type 2N, screwed design
2/65 Type 2G, screwed design, with extension
2/70 Type 2F, with flange and extension
2/75 Type 3, fast response, without process connection
2/80 Type 3G, fast response, screwed design, with extension
2/85 Type 3F, fast response, with flange and extension
Barstock thermowells
2/90 Type 4+4F, with extension
2/94 For installation in existing thermowells

SITRANS TSinsert
2/100 Measuring inserts for retrofitting and upgrading - European and American type

SITRANS TSthermowells
2/104 Thermowells according to DIN 43772
2/107 Thermowells according to ASME B40.9

Thermocouples
2/113 Temperature transmitters for mounting in the connection head
2/114 Technical description
2/115 Straight thermocouples according to EN 50446, with connection head
2/116 Straight thermocouples, individual parts and accessories

Resistance thermometers
2/117 Temperature transmitters for mounting in the connection head
2/118 Flue gas resistance thermometers, with connection head
2/119 For damp rooms
2/120 Accessories – connection heads

Compact and head transmitters
2/121 SITRANS TH100 Slim (Pt100)
2/124 SITRANS TH100 (4 to 20 mA, Pt100)
2/128 SITRANS TH200 (4 to 20 mA, universal)
2/135 SITRANS TH300 (4 to 20 mA, HART, universal)
2/142 SITRANS TH400 fieldbus transmitter
2/148 SITRANS TH320 (HART, universal)
2/157 SITRANS TH420 (HART, universal)

Rail transmitters
2/167 SITRANS TR200 (4 to 20 mA, universal)
2/174 SITRANS TR300 (4 to 20 mA, HART, universal)
2/181 SITRANS TR320 (HART, universal)
2/190 SITRANS TR420 (HART, universal)

Field transmitter/field indicator
2/200 SITRANS TF, 2-wire system
2/209 SITRANS TF, fieldbus transmitter
2/216 SITRANS TF320 (HART, universal)
2/229 SITRANS TF420 (HART, universal)

Field indicator
2/200 SITRANS TF, field indicator for 4 to 20 mA

Fiber-optic temperature measurement
2/244 SITRANS TO500
2/247 SITRANS TO multipoint measuring lance

Accessories
2/251 Further accessories for assembly, connection and transmitter configuration

You can download all instructions, catalogs and certificates for SITRANS T free of charge at the following Internet address: www.siemens.com/sitranst

© Siemens 2020

2

Overview

	Type	Description	Page	Software for parameterization
SITRANS TS temperature sensors				
	TS100	• Cable version • Universal use • For unfavorable space conditions • Mineral-insulated	2/41	-
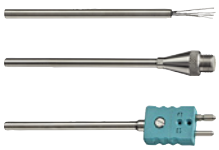	TS200	• Compact version • Universal use • For unfavorable space conditions • Mineral-insulated	2/44	-
	TS300	Resistance thermometer for food, pharmaceiticals and biotechnology • Modular design, for installation in pipes and vessels	2/47	
		• Clamp-on design, for attachment on the pipe primarily for sterilization processes	2/51	
	TS500, Type 2	• For the process industry (pipes and vessels) • Tubular thermowell for low to medium stress • Thermowell according to DIN 43772, Type 2, without process connection • Without extension X, plug-in or use with moveable compression fittings	2/55	-
	TS500, Type 2N	• For the process industry (vessels and pipes) • Tubular thermowell for low to medium stress • Thermowell Type 2N similar to DIN 43772, screwed design • Without extension X, connection head non-adjustable	2/60	-
	TS500, Type 2G	• For the process industry (vessels and pipes) • Tubular thermowell for low to medium stress • Thermowell according to DIN 43722, Type 2G, screwed design • With extension X	2/65	-
	TS500, Type 2F	• For the process industry (vessels and pipes) • Tubular thermowell for low to medium stress • Thermowell according to DIN 43722, Type 2F with flange • With extension X	2/70	-

© Siemens 2020

	Type	Description	Page	Software for parameterization
	TS500, Type 3	• For the process industry (vessels and pipes) • Tubular thermowell for low to medium stress • Thermowell according to DIN 43722, Type 3 without process connection, improved response time • Without extension X, plug-in or use with moveable compression fittings	2/75	-
	TS500, Type 3G	• For the process industry (vessels and pipes) • Tubular thermowell for low to medium stress • Thermowell according to DIN 43722, Type 3G, screwed design, improved response time • With extension X	2/80	-
	TS500, Type 3F	• For the process industry (vessels and pipes) • Tubular thermowell for low to medium stress • Thermowell according to DIN 43722, Type 3F with flange, improved response time • With extension X	2/85	-
 	TS500, Type 4 TS500, Type 4F	• For the process industry (vessels and pipes) • Barstock thermowell for medium to extreme stress • Thermowell according to DIN 43722 • Type 4 for welding • Type 4F with flange	2/90	-
	TS500, installation	• For the process industry (vessels and pipes) • For installation in existing thermowells • Suitable for thermowells according to DIN 43772 as well as ASME B40.9-2001 • With extension X European type or American type	2/94	-
SITRANS TSinsert - measuring inserts for temperature sensors				
	European type	• Replaceable • Mineral-insulated	2/100	-
	American type		2/103	-
SITRANS TSthermowell - thermowells for temperature sensors				
	Screw-in connection	• Straight • Staggered • Tapered	2/104	
	Weld-in connection			
	Flange connection			

© Siemens 2020

	Type	Description	Page	Software for parameterization
Thermocouples/resistance thermometers - Temperature sensors for combustion processes and damp rooms				
	Straight thermocouples	Largest measuring range: 0 ... 1250 °C (32 ... 2282 °F)	2/115	
	Flue gas resistance thermometers	Largest measuring range: -50 ... +600 °C (-58 ... +1112 °F)	2/118	
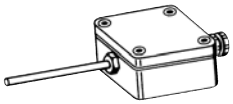	Resistance thermometers for damp rooms	Largest measuring range: -30 ... +60 °C (-22 ... +140 °F)	2/119	

© Siemens 2020

	Application	Mounting of transmitter with Ex protection		Page	Software for parameterization
		Transmitter	Sensor		
Compact and head transmitters					
	SITRANS TH100 Slim For temperature measurement in combination with Pt100 compact resistance thermometers	-	-	2/121	SIPROM T
	SITRANS TH100 • 4 to 20 mA • Transmitters for Pt100	Zone 2, zone 1, zone 0, zone 21, zone 20, DIV 1, DIV 2	Zone 2, zone 1, zone 0, zone 21, zone 20, DIV 1, DIV 2	2/124	SIPROM T
	SITRANS TH200 Transmitters for connection to resistance thermometers, resistance-based sensors, thermocouples and DC voltages up to 1.1 V • 4 to 20 mA • Universal	Zone 2, zone 1, zone 0, zone 21, zone 20, DIV 1, DIV 2	Zone 2, zone 1, zone 0, zone 21, zone 20, DIV 1, DIV 2	2/128	SIPROM T
	SITRANS TH300 Transmitters for connection to resistance thermometers, resistance-based sensors, thermocouples and DC voltages up to 1.1 V • 4 to 20 mA • Universal • HART	Zone 2, zone 1, zone 0, zone 21, zone 20, DIV 1, DIV 2	Zone 2, zone 1, zone 0, zone 21, zone 20, DIV 1, DIV 2	2/135	SIMATIC PDM
	SITRANS TH400 Transmitters for connection to resistance thermometers, resistance-based sensors, thermocouples and DC voltages • Fieldbus transmitters • PROFIBUS PA • FOUNDATION fieldbus	Zone 2, zone 1, zone 0, zone 21, zone 20, DIV 1, DIV 2	Zone 2, zone 1, zone 0, zone 21, zone 20, DIV 1, DIV 2	2/142	SIMATIC PDM for TH 400 with PROFIBUS PA
	SITRANS TH320 2-wire head transmitter with and without HART communications interface. With 1 input for connection to resistance thermometers, linear resistors, potentiometers, thermocouples, and DC voltages up to 1.7 V • 4 to 20 mA • HART 7 • Universal • SIL2/3 according to IEC 61508	Zone 2, zone 1, zone 0, zone 21, zone 20, M1, DIV 1, DIV 2	Zone 2, zone 1, zone 0, zone 21, zone 20, M1, DIV 1, DIV 2	2/148	SIMATIC PDM

© Siemens 2020

	Application	Mounting of transmitter with Ex protection		Page	Software for parameterization
		Transmitter	Sensor		
	SITRANS TH420 Transmitters with 2 inputs for connection to resistance thermometers, linear resistors, potentiometers, thermocouples and DC voltages up to 1.7 V • Drift detection function • HART 7 • Universal • SIL2/3 according to IEC 61508 • High input availability	Zone 2, zone 1, zone 0, zone 21, zone 20, M1, DIV 1, DIV 2	Zone 2, zone 1, zone 0, zone 21, zone 20, M1, DIV 1, DIV 2	2/157	SIMATIC PDM
Rail transmitters					
	SITRANS TR200 • 4 to 20 mA • Universal	Zone 2, zone 1, zone 0, zone 21	Zone 2, zone 1, zone 0, zone 21, zone 20	2/167	SIPROM T
	SITRANS TR300 • 4 to 20 mA • Universal • HART	Zone 2, zone 1, zone 0, zone 21	Zone 2, zone 1, zone 0, zone 21, zone 20	2/174	SIMATIC PDM
	SITRANS TR320 2-wire rail transmitter with and without HART communications interface. With 1 input for connection to resistance thermometers, linear resistors, potentiometers, thermocouples, and DC voltages up to 1.7 V • 4 to 20 mA • HART 7 • Universal • SIL2/3 according to IEC 61508	Zone 2, zone 1, zone 0, zone 21, zone 20, M1, DIV 1, DIV 2	Zone 2, zone 1, zone 0, zone 21, zone 20, M1, DIV 1, DIV 2	2/181	SIMATIC PDM
	SITRANS TR420 Transmitters with 2 inputs for connection to resistance thermometers, linear resistors, potentiometers, thermocouples and DC voltages up to 1.7 V • Drift detection function • HART 7 • Universal • SIL2/3 according to IEC 61508 • High input availability	Zone 2, zone 1, zone 0, zone 21, zone 20, M1, DIV 1, DIV 2	Zone 2, zone 1, zone 0, zone 21, zone 20, M1, DIV 1, DIV 2	2/190	SIMATIC PDM

© Siemens 2020

	Application	Mounting of transmitter with Ex protection		Page	Software for parameterization
		Transmitter	Sensor		
Field transmitters					
	SITRANS TF Transmitters for connection to resistance thermometers, resistance-based sensors, thermocouples and DC voltages up to 1.1 V • In field enclosure for heavy industrial use • 4 to 20 mA • HART 5 • Universal	Zone 2, zone 1; zone 21, DIV 1, DIV 2	Zone 2, zone 1, zone 0	2/200	Depending on the installed TH200/TH300 transmitter
	SITRANS TF Fieldbus transmitters for connection to resistance thermometers, resistance-based sensors, thermocouples and DC voltages up to 0.8 V • In field enclosure for heavy industrial use • PROFIBUS PA • FOUNDATION fieldbus	Zone 2, zone 1; zone 21, DIV 1, DIV 2	Zone 2 zone 1, zone 0	2/209	SIMATIC PDM for PROFIBUS PA
	SITRANS TF320 NEW Transmitters for connection to resistance thermometers, resistance-based sensors, thermocouples and DC voltages up to 1.7 V • In field enclosure for heavy industrial use • 4 to 20 mA • HART 7 • Universal • SIL2/3 according to IEC 61508	Zone 2, Zone 1, Zone 21, DIV 1, DIV 2	Zone 2, Zone 1, Zone 21, DIV 1, DIV 2	2/216	Local operation with buttons. SIMATIC PDM local with HART modem or SIPROM T (depending on SITRANS TH320 type used)
	SITRANS TF420 NEW Transmitters for connection to resistance thermometers, resistance-based sensors, thermocouples and DC voltages up to 1.7 V • In field enclosure for heavy industrial use • HART 7 • Universal • SIL2/3 according to IEC 61508 • High input availability	Zone 2, Zone 1, Zone 21, DIV 1, DIV 2	Zone 2, Zone 1, Zone 21, DIV 1, DIV 2	2/229	Local operation with buttons. SIMATIC PDM locally with HART modem.
Field indicator for 4 to 20 mA signals					
	SITRANS TF Field indicator for 4 to 20 mA signals Display of units can be user-defined	Zone 2, zone 1, zone 21, DIV 1, DIV 2	-	2/200	-

© Siemens 2020

	Application	Mounting of transmitter with Ex protection		Page	Software for parameterization
		Transmitter	Sensor		
Fiber-optic temperature measurement					
	SITRANS TO500 Multipoint temperature transmitter for measuring temperatures and temperature profiles with fiber-optic multipoint measuring lances.		Zone 0, Zone 20	2/244	Via Ethernet with the supplied parameter assignment software
	SITRANS TO multipoint measuring lance For measuring temperatures and temperature profiles using fiber-optic Fiber Bragg Grating (FBG).			2/247	

Supplied product documentation on DVD and safety instructions

The scope of delivery of the Siemens products for process instrumentation includes a multilingual instruction sheet with **safety instructions** as well as a uniform **mini DVD – Process Instrumentation and Weighing Systems**.

This DVD contains the most important manuals and certificates for the Siemens process instrumentation and weighing technology portfolio. The delivery may also contain product-specific or order-specific printed materials.

For additional information, refer to the Annex on page 10/3.

© Siemens 2020

Overview

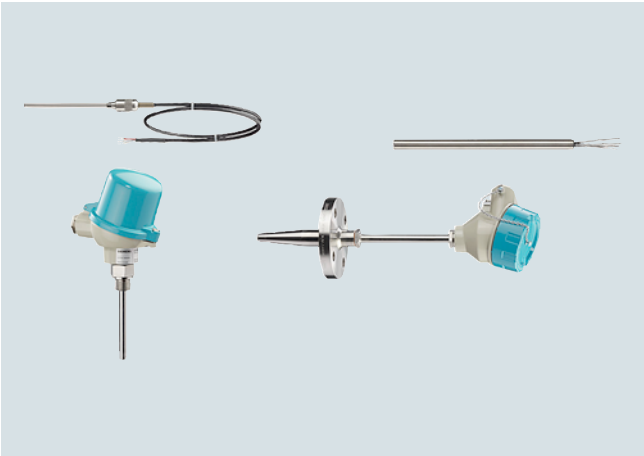

The temperature sensors of the SITRANS TS product family are used for measuring temperatures in industrial plants.

Siemens offers the following temperature sensors:

- SITRANS TS100
  - General use
  - Compact design with connection cable
- SITRANS TS200
  - General use
  - Compact design with plug/wire ends
- SITRANS TS300
  - Use in food, pharmaceuticals and biotechnology
  - Modular or clamp-on design
- SITRANS TS500
  - General use
  - Modular design with connection head and thermowell

Benefits

The modular design makes it possible to customize the temperature sensor for most applications, while still being able to use many standardized individual components.

Application

Depending on the specification, sensors can be combined with different connection heads, extensions (neck tube) and process connections. As a result, the sensors can be used in a large number of technical applications, e.g. in the following industries:

- Chemical industry
- Petrochemical industry
- Power engineering
- Basic material industry
- Pharmaceutical industry
- Biotechnology
- Food manufacturing

SITRANS TS100 and SITRANS TS200

Temperature sensors of the SITRANS TS100 series are cable thermometers with different electrical connection options (e.g. plug, soldered connection, connection cable). The SITRANS TS200 series of compact thermometers is characterized by a compact design. Both temperature sensor series are suitable for:

- Measurements of temperatures of solids, where additional thermowells are not required for replacements done during ongoing operations, e.g. bearing bracket temperature.
- Measurements which are particularly critical with regard to response times. The advantages offered by an additional thermowell are intentionally omitted.
- Measuring points which must be easy to convert or relocate.
- Surface temperature measurements: The temperature sensor is used in conjunction with a surface connection piece.
- Cost-effective transport: the mineral-insulated design of the sensors allows for economical transport even over large lengths. As of a length of 0.8 m, the sensors can be delivered rolled or bent.

SITRANS TS300 temperature sensors for food, pharmaceuticals and biotechnology

The temperature sensors of the SITRANS TS300 series are thermometers especially designed for measurements with high hygienic demands, such as in the food, pharmaceutical and biotechnology industries. The basic versions are:

- Thermometers in modular design with replaceable measuring insert and process connections usual in the industry
- Clamp-on thermometers for measurement of the tube surface temperature without interrupting the process

SITRANS TS500 temperature sensors as a module system

Due to their modular design, temperature sensors of the SITRANS TS500 series are well suited to a large number of applications.

The replaceable measuring insert makes it possible to conduct maintenance work even during ongoing operations. These devices are used particularly frequently in pipes and tanks in the following industries:

- Power stations
- Chemical industry
- Petrochemical industry
- General process engineering
- Water, waste water

© Siemens 2020

Design

SITRANS TS100 7MC71xx

The following figure shows the available versions of SITRANS TS100 temperature sensors.

SITRANS TS100, mineral-insulated (MIC)
Degree of protection:
- Plug-in connection type: see table
- Transition sensor/cable IP68 (2h/2.5 m [98.5 inch]) for PVC and silicone cable, otherwise IP66

Version	Degree of protection
Flying leads	IP00
LEMO coupling 1S	IP50
M12 device plugs	IP54
Thermocouple coupling	IP20

SITRANS TS100

The following types of process connections can be implemented:

- Compression fitting
- Spring-loaded compression fitting
- Soldering nipple
- Direct soldering/welding in

SITRANS TS200 7MC72xx

The following figure shows the available versions of SITRANS TS200 temperature sensors.

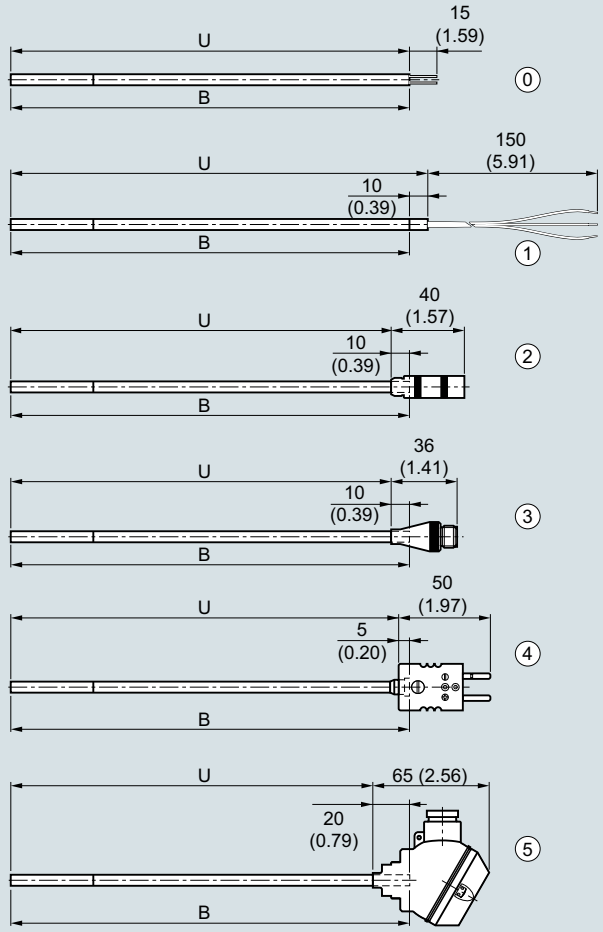

B Measuring insert length
H Head height
U Insertion length

			IP level sensor	IP level terminals
0	Basic sensor	U = B	IP65	IP00
1	Flying leads	U = B + 10 (0.39)	IP65	IP00
2	LEMO coupling 1S	U = B - 10 (0.39)	IP65	IP50
3	M12 device plugs	U = B - 10 (0.39)	IP65	IP54
4	Thermocouple coupling	U = B - 5 (0.20)	IP65	IP20
5	Mini connection head	U = B - 20 (0.79)	IP65	IP65

SITRANS TS200, dimensions in mm (inch)

The following types of process connections can be implemented:

- Compression fitting
- Spring-loaded compression fitting
- Soldering nipple
- Direct soldering/welding in

© Siemens 2020

SITRANS TS300

SITRANS TS300 modular design

The resistance thermometer is intended for installation in vessels and pipes for hygienic requirements.

- Modular design consisting of thermowell, measuring insert, connection head and optional transmitter for replacement during operation.
- Hygiene version, design according to recommendations of the EHEDG
- Transmitter can be integrated (4 to 20 mA, PROFIBUS PA or FOUNDATION Fieldbus)

The following figure shows the available versions and components of SITRANS TS300 temperature sensors in modular design.

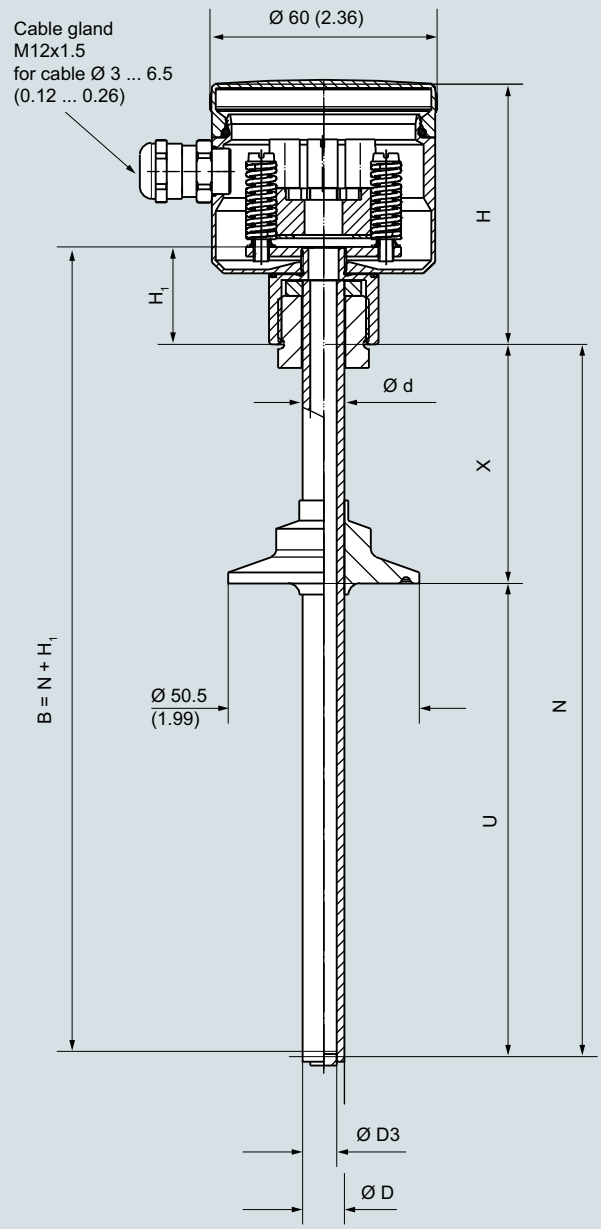

B	Measuring insert length
Ød	Measuring insert outer diameter (6 (0.24))
ØD	Process connection outer diameter
ØD3	Thermowell inner diameter
H	Head height
H_1	Type Axx = 41 (1.61) Type Bxx = 26 (1.02)
N	Nominal length
U	Insertion length
X	Extension length

SITRANS TS, temperature sensors, TS300 modular design, dimensions in mm (inch)

© Siemens 2020

Technical description

SITRANS TS300 Clamp-on

The temperature is recorded via a modified, fast-response Pt100 measuring element that is positioned and insulated by a pipe collar made of temperature-resistant plastic.

The measuring insert contains a special temperature sensor made of silver that is constantly pressed onto the pipe by a spring.

A positively driven operation of the replaceable measuring insert ensures a constant fit on the pipe and thus provides for a reproducible measuring result.

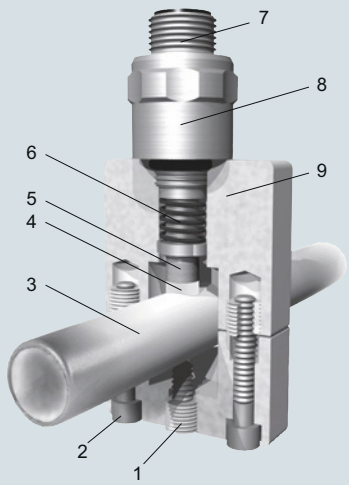

1 Vibration-locking-screw
2 Mounting screws
3 Process pipeline
4 Temperature sensor
5 Thermal decoupling
6 Spring load
7 Electrical connection M12
8 Replaceable measuring insert
9 Heat insulated pipe collar

Design	
Measuring insert	• Special measuring insert made of stainless steel; hygienic design • Measuring element made of silver; thermal decoupling by plastic insert Measuring insert screwed into collar with spring tension. Use thermo-lubricant (see accessories) prior to mounting the device.
Pipe collar	
• Material	Temperature-resistant, high-performance plastic with integrated insulation system in hygienic design
• Ambient temperature influence	Approx. 0.2%/10 K

The diameter of the measuring tube is required for correct device selection. For special sizes, you start by selecting the appropriate collar size and entering the desired size in plain text. Space-saving designs (clamping bracket version) are available optionally for installation in restricted spaces (e.g., tube bundles).
For correct assignment after recalibration, the collar as well as the measuring insert are marked with the serial number and tube diameter. This information can also be engraved.

© Siemens 2020

The following figure illustrates the available designs and components of the SITRANS TS300 temperature sensors in clamp-on design:

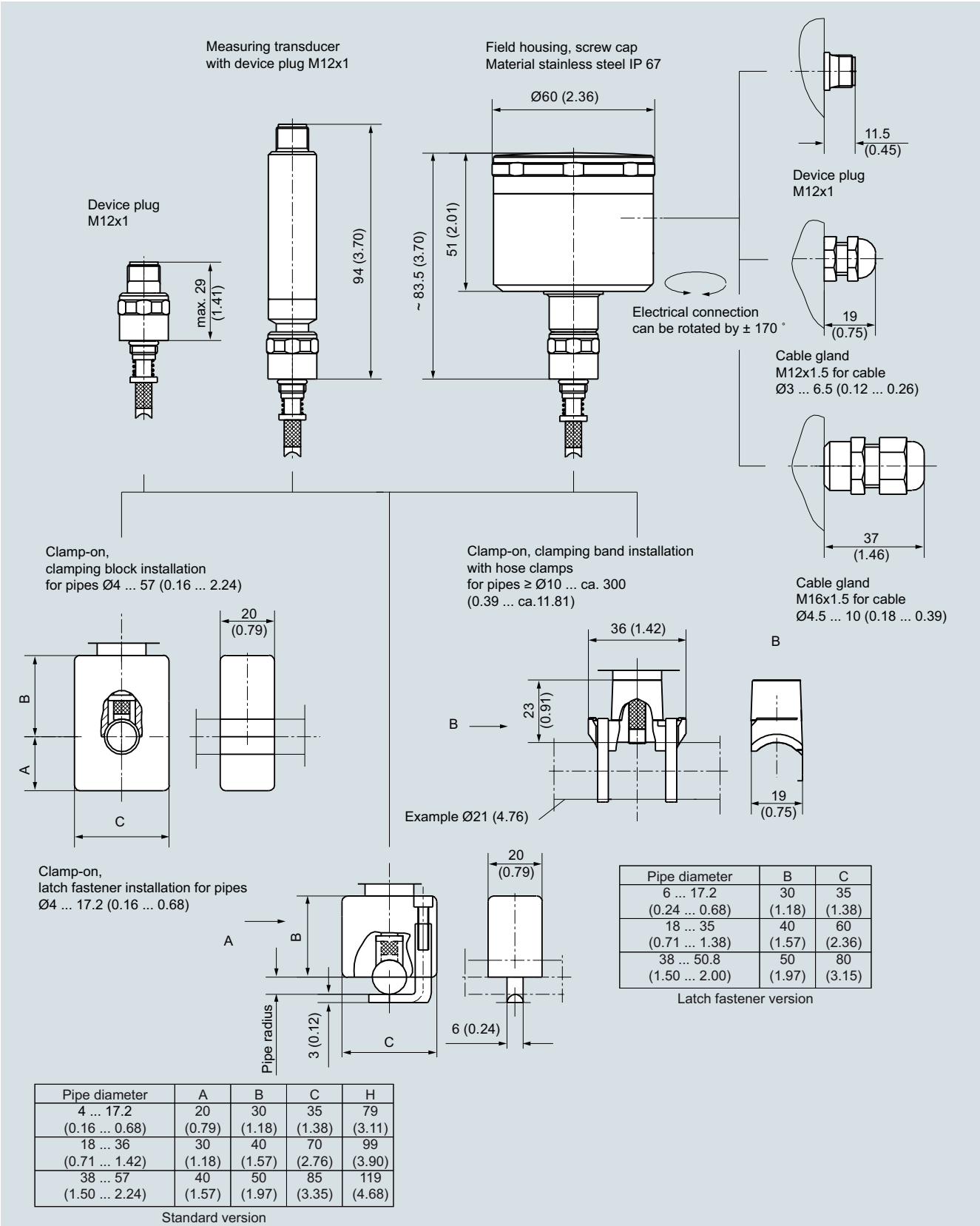

Pipe diameter	B	C
6 ... 17.2 (0.24 ... 0.68)	30 (1.18)	35 (1.38)
18 ... 35 (0.71 ... 1.38)	40 (1.57)	60 (2.36)
38 ... 50.8 (1.50 ... 2.00)	50 (1.97)	80 (3.15)

Latch fastener version

Pipe diameter	A	B	C	H
4 ... 17.2 (0.16 ... 0.68)	20 (0.79)	30 (1.18)	35 (1.38)	79 (3.11)
18 ... 36 (0.71 ... 1.42)	30 (1.18)	40 (1.57)	70 (2.76)	99 (3.90)
38 ... 57 (1.50 ... 2.24)	40 (1.57)	50 (1.97)	85 (3.35)	119 (4.68)

Standard version

SITRANS TS300 clamp-on design, device plug, field enclosure, cable gland, versions, dimensions in mm (inch)

© Siemens 2020

Technical description

SITRANS TS500 7MC75xx

The following figure illustrates the available designs and components for SITRANS TS500 temperature sensors:

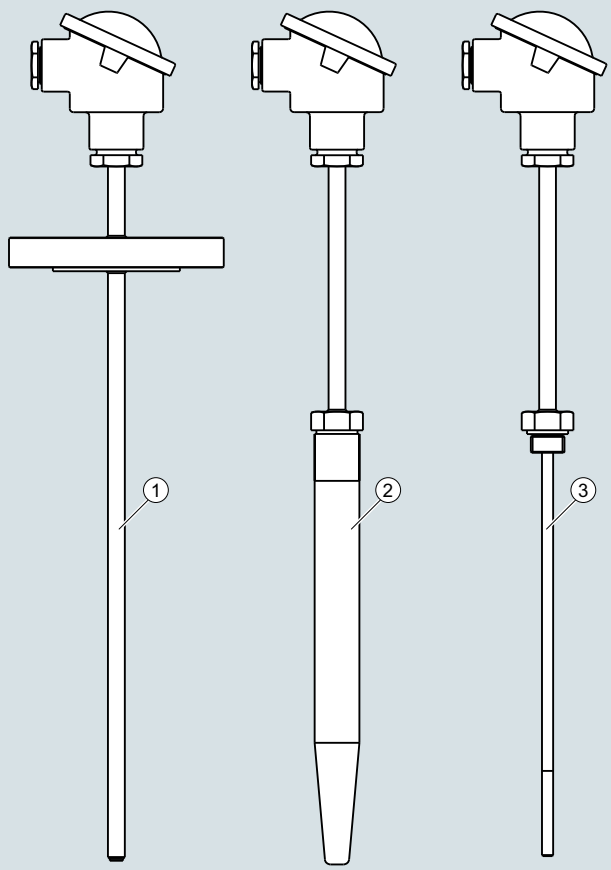

1 SITRANS TS500, tubular thermowell
2 SITRANS TS500, barstock thermowell
3 SITRANS TS500, for installation in an existing thermowell

SITRANS TS500 temperature sensors; the IP degree of protection depends on the connection head

The temperature sensors of the SITRANS TS500 series are available in three different versions:

Version	Description	Application	Process connection
1	• Tubular thermowell • Thermowell and extension made from a pipe; closed at tip with welded-in base plug	Minimal to medium process requirements	• Connection with thread or flange • Thread is welded on, or compression fitting
2	• Barstock thermowell • Barstock thermowell, tubular extension; extension screwed into thermowell	Medium to extreme process requirements	• Directly welded into pipe • With welded-on flange • With male thread
3	• For installation in existing thermowell • Tubular extension	Process requirements depending on the thermowell design	Screwed into an existing thermowell

Function

A complete measuring point consists of a measuring insert which contains the sensor elements, the protective fitting and an optional measured value processor (transmitter).

Basic sensors

The sensor elements are:

- Resistance thermometers:
  Temperature measurement is based on the temperature dependency of the installed measuring resistor.
- Thermocouples:
  Temperature measurement is based on the Seebeck effect. A thermocouple which subjected to a temperature drop produces thermoelectric voltage that can be measured.

Transmitter

The optional Siemens transmitters assume the following functions:

- Optimum measurement processing
- Strengthening of weak sensor signals directly on site
- Transmit standardized signals
- Protect against electromagnetic interspersion
- Option to conduct measuring point diagnostics

© Siemens 2020

Configuration

Components: Process connections

This catalog is limited to the standard versions. Special versions are available on request. The technical data are provided to assist the user. It is the responsibility of the ordering party to make the correct selection of suitable devices.

Welding in

The welding in of the thermowell provides a permanent, secure and highly resilient process connection, assuming a respective welding quality.

It is not possible to accidentally open the process connection. Additional gaskets are not required. If the pipe is not thick enough to ensure a secure welded joint, appropriate weld-in sockets are used. With weld-in sockets in suitable length, it is also possible to standardize a plant's measuring points to a large extent. Stocks of spare parts can therefore be reduced to a minimum.

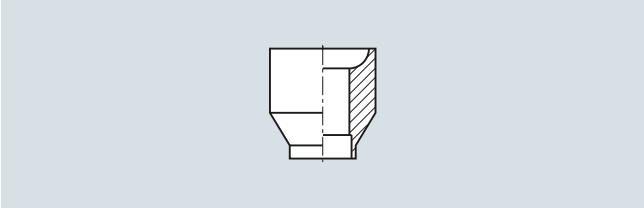

Weld-in sockets

Thread

Type of installation: screw-in thread

Screw-in threads of different thread types and sizes are firmly welded to the thermowell.

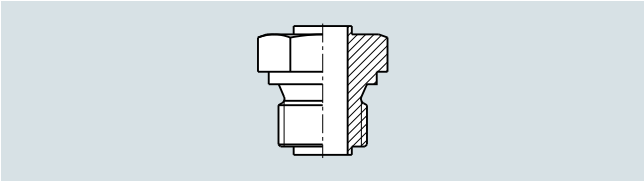

Screw-in thread

Type of installation: Compression fittings

Compression fittings are available as accessories. They fit the diameter of the thermowell and provide for flexible installation. The installation length can be selected on site. When installed correctly, compression fittings are well suited for low and medium pressure.

The difference between the standard and spring-loaded version is as follows:

In the case of the spring-loaded compression fitting, the sensor is pressed against the measured object or the base of the thermowell. thus achieving particularly good heat contact.

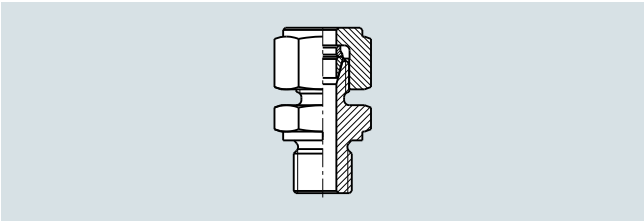

Compression fitting

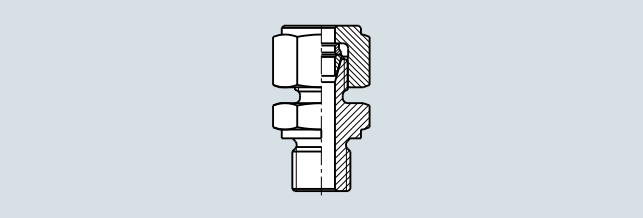

Spring-loaded compression fitting

Thread form:

Cylindrical thread

Cylindrical threads do not seal in the thread but due to an additional sealing surface or seal. For example, threads with the short form "G" (as per ISO 228) feature a thread form with a defined screw gauge.

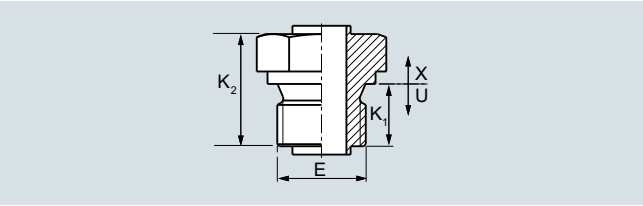

Cylindrical thread

Tapered thread

By contrast, tapered threads, such as the American "NPT" thread, seal metallically in the thread. The relevant length information in the catalog refers to the "fully-tightened point (hand-tight)" of the thread, which cannot be defined exactly due to standard-related tolerances. However, the spring-load of the measuring insert compensates for the differences in length.

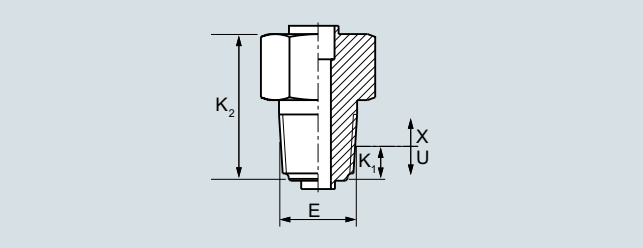

NPT thread

	Thread form	E / E_1	K_1	K_2
Thermowells Form 2G + 3G	Cylindrical	G ½"	15	27
		G ¾"	16	34
		G1	30	46
		M20 x 1.5	12	26
		M27 x 2	16	34
		M33 x 2	18	36
	Tapered	NPT ½"	9	30
		NPT ¾"	9	32.5
		NPT 1"	10	40
Extensions 7MC7500	Cylindrical	G ½"	12	27
		M14 x 1.5	12	23
		M18 x 1.5	12	25
		M20 x 1.5	12	25
	Tapered	NPT ½"	9	33

X = extension length
U = installation length
E_1 = Neck tube/process connection
K_1 = Screw-in depth
K_2 = Length of the process connection

© Siemens 2020

Flanges

The different properties of the flanges are as follows:

- Standard series EN 1092, ASME 16.5,..
- Nominal pressure
- Nominal diameter
- Sealing surface

This information is also stamped into the flange, along with the material code and batch number for "3.1 Material". For flange thermowells made of expensive materials, wetted parts of the thermowell and the so-called flanged wheel are designed with the required material. The flanged wheel is welded in front of the flange sealing surface in this case. Non-wetted parts are listed in 316L.

Industry-specific process connections

Special process connections have become popular in different industries. For example, hygiene technology: clamp-on connections, dairy connections and others.

Components: Thermowell

Tubular or barstock thermowells fulfill two basic functions:

- They protect the measuring insert from corrosive media
- They make it possible to replace units during ongoing operation

This catalog is limited to the standard versions. Special versions are available on request. The large number of available types can be classified as follows:

- Tubular thermowells
  Tubular thermowells are also described as "welded" or "multi-part" thermowells (not to be confused with "multi-part protective fittings"). They are suitable for low to medium process loads and can be manufactured on a cost-effective basis.
  Versions:
  - Form 2N similar to DIN 43772
    with straight tip and shortest possible extension length
    non-adjustable connection head
  - Form 2 as per DIN 43772
    with straight tip and extension
    adjustable connection head
    Form 2: without process connection
    Form 2G: Threaded connection
    Form 2F: Flange connection
  - Form 3 according to DIN 43772
    Version with tapered tip and extension
    Adjustable connection head
    For these thermowells, the thermowell tip is tapered by rotary swaging. This results in an excellent fit with the measuring insert and very good response times.
    Analogous to forms 2, versions 3G/3F are also available for form 3
- Barstock thermowells according to DIN 43772
  Where process loads are too great, or where a thermowell cannot have a welded seam, deep-hole drilled barstock thermowells are used. Thermowells of form 4 according to DIN 43772 are widely used. Forms D1-D5 of the previous standard DIN 43763 have been integrated into form 4 of DIN 43772:

Design DIN 43763 invalid	Design 4 DIN 43772 current	
	L in mm	U in mm
D1	140	65
D2	200	125
D4	200	65
D5	260	125

The following table shows the dimensions of the different thermowells.

	Tip		Process connection	
	∅ Inner mm (inch)]	∅ Outer [mm (inch)]	∅ Inner [mm (inch)]	∅ Outer [mm (inch)]
Thermowell type, design	**D_1**	**D_2**	**D_3**	**D_4**
2N/2/2G/2F, tube	7 (0.28)	9 (0.35)	7 (0.28)	9 (0.35)
2/2G/2F, tube	7 (0.28)	12 (0.47)	7 (0.28)	12 (0.47)
3/3G/3F, tube	6 (0.24) Tolerances as per DIN 43772	9 (0.35)	7 (0.28)	12 (0.47)
4/4F, barstock	7 (0.28)	12.5 (0.49)	7 (0.28)	24 (0.94)
4/4F, quick-response, barstock	3.5 (0.14)	9 (0.35)	3.5 (0.14)	18 (0.71)

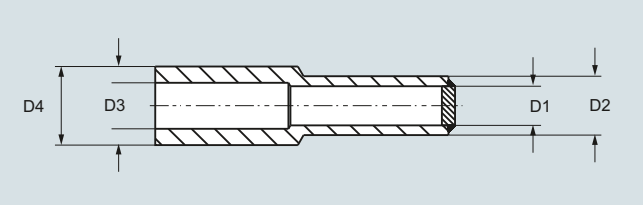

Dimensions of thermowells

Barstock thermowells according to ASME B40.9

Thermowells according to ASME are distinguished by their form: Straight, reduced (staggered) or tapered along the entire installation length.

Coarse subdivisions can also be made in the type of process connection: screwed design, for welding in, with flange, or with the so-called Van Stone connection.

For the Van Stone connection, a small flange sealing surface exists directly at the barstock thermowell. This prevents any welding seams in the area touching the media. The thermowell is fixed by a collar flange that presses the sealing surface against the plant-side flange. Another advantage of this design is the optimized spare parts inventory. A thermowell fits onto multiple connecting flanges; the only difference is in the collar flanges.

Components: Extension (neck tube)

The extension is the section from the lower edge of the connection head to the fixed point of the process connection or thermowell. There are a variety of terms for this component, e.g. neck tube. For this reason the term extension has been selected as a standardized term for the different designs. Function is the deciding factor:

- Thermal decoupling of connection head from process temperature
- Installation of connection head over existing insulation
- Simple standardization of measuring inserts: In general, the length of the extension may be freely selected. However, when using standardized installation lengths, the option "Extension as per DIN 43772" is recommended. This ensures that measuring inserts which are quickly available can be used. In the case of special lengths, it is possible to standardize the measuring insert length through a clever combination with the respective special extension length. This allows customers to optimize their costs in purchasing and logistics.
- For American-type sensors, the extension also undertakes the spring load of the measuring insert.
- Depending on the version, the extension can also enable the adjustment of the connection head

© Siemens 2020

- The form of the extension depends on the form of the thermowell:
  - Tubular thermowell
    The extension and thermowell usually consist of one continuous pipe. The process connection is welded on (= one-piece protective fitting).
  - Barstock thermowells
    Extension and the thermowell consist of two components which are screwed together. The process connection is attached to the thermowell (= multi-piece protective fitting).

Thermowell type	X [mm (inch)]	M [mm (inch)]	Divisible
2G	129 (5.08)	145 (5.71)	No
2F	64 (2.52)	80 (3.15)	No
3G	131 (5.19)	147 (5.79)	No
3F	66 (2.60)	82 (3.23)	No
4 (only L=110)	139 (5.47)	155 (6.10)	Yes
4 (others)	149 (5.87)	165 (6.50)	Yes

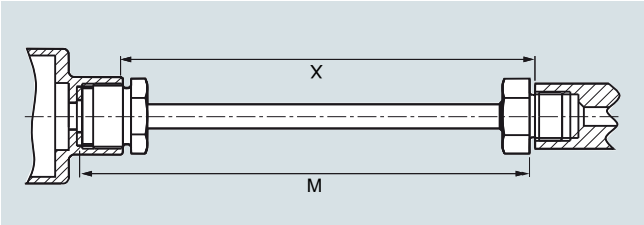

Extensions as per DIN 43772

Versions

With regard to their function, extensions can be classified into two types:

- Adjustable/non-adjustable:
  Function of the extension to align the connection head to the desired direction
- Integrated measuring insert spring load:
  In the case of American-type sensors, the spring load of the measuring insert is integrated into the extension. Measuring insert and extension form one unit.

European type Adjustable, cylindrical	European type Adjustable, tapered	Without extension Without thread (optional sealing screw)
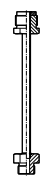	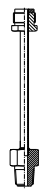	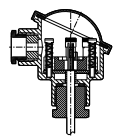
European type Non-adjustable, cylindrical	European type Non-adjustable, tapered	European type Non-adjustable, Nipple (NIP)
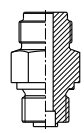	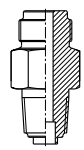	
European type Adjustable Nipple-Union-Nipple (NUN)	American type Adjustable Nipple-Union-Nipple (NUN)	American type Non-adjustable, Nipple (NIP)
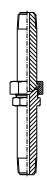		

Versions; in the case of heavy stainless steel connection heads in conjunction with vibrations, a short extension length should be chosen or external support should be provided.

© Siemens 2020

Technical description

Components: Connection head

Connection head

the connection head protects the connection department. The connection head features sufficient room for mounting a clamping base or transmitter.

Different connection heads are used depending on the application and preference. Where cable glands and thread adapters are included in the scope of the order, they will be supplied with the device.

Connection head	Type Material	Label	Cable gland	Degree of protection [corrosion protection corresponding to ISO 12944-2]	Transmitter installation	Connection height H1 [mm (inch)]	Explosion protection optional
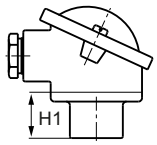	BA0 aluminum	Flange lid	M20 x 1.5 Not Ex: Plastic Ex i/Ex n: Brass	IP65 [C2, durability H; C3, durability M]	Measuring insert	26 (1.02)	Ex i
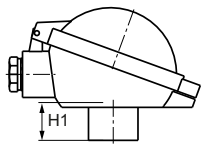	BB0 aluminum	Hinged cover low	M20 x 1.5 Not Ex: Plastic Ex i/Ex n: Brass	IP65 [C2, durability H; C3, durability M]	Measuring insert	26 (1.02)	Ex i
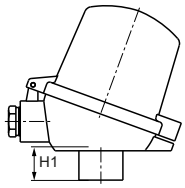	BC0 aluminum BC0 plastic	Hinged cover high	M20 x 1.5 Not Ex: Plastic Ex i/Ex n: Brass	IP65 [For aluminum: C2, durability H; C3, durability M] [For plastic: not applicable]	Measuring insert and/or hinged cover	26 (1.02)	Ex i
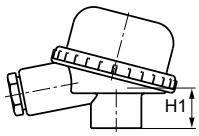	BM0 plastic	Screw cover	M20 x 1.5 Not Ex: Plastic Ex i/Ex n: Brass	IP54 [For plastic: not applicable]	Measuring insert	26 (1.02)	Ex i
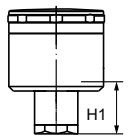	BS0 stainless steel	Screw cover	M12 x 1.5 polyamide	IP67 [For stainless steel: not applicable]	Measuring insert	26 (1.02)	Ex i

© Siemens 2020

Connection head	Type Material	Label	Cable gland	Degree of protection [corrosion protection corresponding to ISO 12944-2]	Transmitter installation	Connection height H1 [mm (inch)]	Explosion protection optional
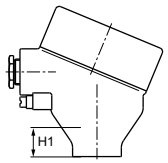	AG0 aluminum AU0 stainless steel AISI 316 (1.4401)	Screw cover, heavy-duty	M20 x 1.5 not Ex: plastic Ex i/Ex n: brass Ex d: without cable gland	IP66/68 (IP68: 1.5 m; 2 h) NEMA 4X [For aluminum: C2, C3, C4, for stainless steel: not applicable]	Measuring insert	41 (1.61)	Ex i, Ex d
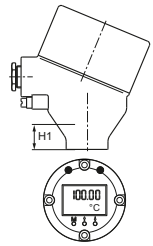	AH0 aluminum AV0 stainless steel AISI 316 (1.4401)	Screw cover, window, heavy duty, with 4 ... 20 mA display	M20 x 1.5 not Ex: plastic Ex i/Ex n: brass Ex d: without cable gland	IP66/68 (IP68: 1.5 m; 2 h) NEMA 4X [For aluminum: C2, C3, C4, for stainless steel: not applicable]	Measuring insert	41 (1.61)	Ex i, Ex d

© Siemens 2020

Technical description

Components: Measuring insert

Measuring insert

The measuring insert of the temperature sensor is built into the protective fitting (thermowell, extension and connection head). The sensor element is located in the measuring insert, where it is protected. The spring load of the Siemens measuring inserts provide good thermal contact with the tip of the thermowell, and vibration resistance is significantly increased. Only highly resistant mineral-insulated cables (so-called MIC or plastic-sheathed) are used for the electrical connection between the sensor element and connection head. The highly compacted insulation of magnesium oxide achieves excellent levels of vibration resistance. The following measuring insert designs are the most widely used on the world market:

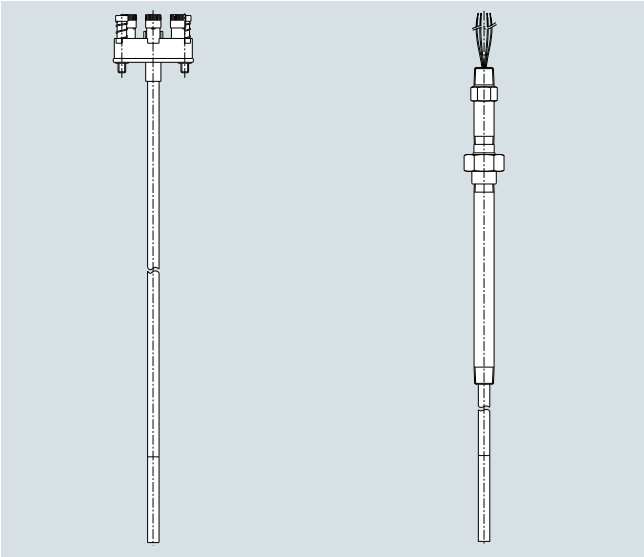

European type American type

European type

European type measuring inserts can be replaced without having to dismantle the connection head. The springs are located either on the transmitter or the terminal block. This makes it possible to achieve a 8 to 10 mm spring range. If a transmitter is not attached, a ceramic base is located at this position. Order option G01 can be used to select a version with free wire ends instead of the ceramic base for mounting of head transmitters.

American type

American-type measuring inserts feature a large spring range. These measuring inserts are ideal for use with NPT threads that feature high tolerances. In this configuration, the extension function is partially or fully integrated (nipple-union-nipple). Moreover, it is also possible to directly attach field devices, e.g. SITRANS TF.

Components: Transmitters

SITRANS TH head transmitters process weak, non-linear sensor signals and transmit a stable and temperature-linear standard signal. thereby minimizing sensor signal disruptions.

The transmitters permanently monitor the temperature sensors and transmit diagnostic data to superordinate systems.

Because of the low energy feed of the SITRANS TH head transmitters, self-heating of the temperature sensors is at a minimal level.

The electrical isolation and integrated reference junction ensure that temperature sensors with thermocouples provide reliable measurements at a low cost.

SITRANS TH product family

For detailed technical data on the SITRANS TH transmitters, please refer to this catalog.

- TH100 - the basic device
  - Output: 4 ... 20 mA
  - 1 x input Pt100
  - Can be configured using simple software
- TH320 - the universal device
  - Output 4 ... 20 mA or:
  - Output 4 ... 20 mA/HART
  - 1 x input resistance thermometer, thermocouples
  - Can be configured using simple software
- TH420 – Twice as safe
  - Output 4 ... 20 mA/HART
  - 2 x input resistance thermometer, thermocouples, hot backup, drift detection, etc. can be achieved as a result
  - Extended diagnostic functions
- TH400 - Fieldbus PA and FF
  - Output PROFIBUS PA or FOUNDATION Fieldbus
  - 1 x input resistance thermometer, thermocouples
  - Diagnostic functions

Installation types

All SITRANS-TH transmitters can be installed in type B connection heads. The following installation forms are used:

- Measuring insert installation
  Our standard version offers the following advantages
  - Small vibrating masses and compact design
  - Measuring insert-transmitter unit can be replaced quickly

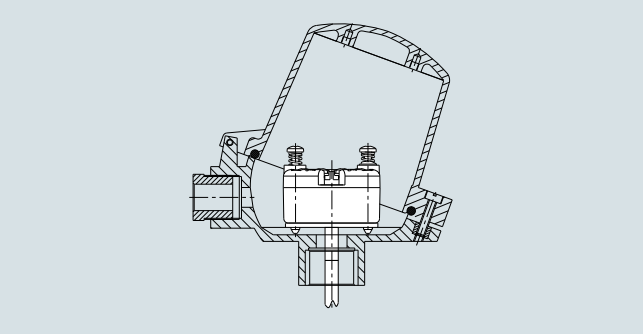

Installation of measuring insert

- Hinged cover installation
  - Standard for head type BC0 and BP0
  - Advantage: Measuring insert and transmitter can be repaired/maintained separately (recalibration).

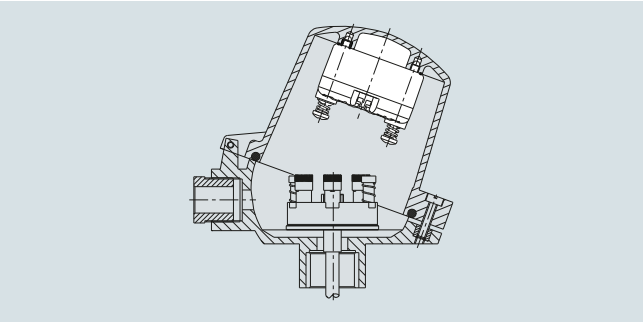

Hinged cover installation

© Siemens 2020

Measuring technology: Basic sensors

The diverse application spectrum for industrial temperature measuring technology requires different sensor technologies.

Resistance thermometer

Basic sensors made of other basic materials, with different basic values or different underlying standards, are available on request. Resistance thermometers can be classified as follows:

- Basic design
  The sensor element is built with thin layer technology. The resistance material is applied in the form of a thin layer on a ceramic carrier material.
- Versions featuring increased vibration resistance
  In addition to the basic design: Measures to improve vibration resistance.
- Versions with expanded measuring range
  Elements in wire-wound design. The wire winding is embedded in a ceramic body.

Thermocouples

Thermocouples based on other thermocouples or underlying standards are available upon request.

The most common base-metal thermocouples are:

- Type N (NiCrSi-NiSi) high degree of stability even in upper temperature range
- Type K (NiCr-Ni) more stable than type J, but drifts in upper range
- Type J (Fe-CuNi) narrow application band

Measuring technology: Measuring range

The measuring range describes the temperature limits within which the thermometer can be used in a way that is meaningful for measurement purposes. Depending on the loads present, the thermowell materials and the desired accuracy levels, among other things, the actual application range for the thermometer may be smaller.

Resistance thermometer [°C (°F)]	
Basic version and increased vibration resistance	-50 ... +400 (-58 ... +752)
Expanded measuring range	-196 ... +600 (-320.8 ... +1112)

Thermocouple [°C (°F)]	
Type N	-40 ... +1100 (-40 ... +2012)
Type K	-40 ... +1000 (-40 ... +1832)
Type J	-40 ... +750 (-40 ... +1382)

Measuring technology: Measuring accuracy

Resistance thermometer

The tolerance classes of the resistance thermometers correspond to IEC 751/EN 60751:

Tolerance	**Δt**
Basic accuracy, Class B	± (0.30 °C +0.0050|t[°C]|) 0.54 °F +0.0050x|t[°F]-32|
Increased accuracy, Class A	± (0.15 °C +0.0020|t[°C]|) 0.27 °F +0.0020x|t[°F]-32|
High degree of accuracy, Class AA (1/3 B)	± (0.10 °C +0.0017|t[°C]|) ± 0.18 °F +0.0017x|t[°F]-32|

The following tables provide an overview of the scope of these tolerances. If the specified limits are exceeded with a resistance thermometer, the values of the next lower accuracy class apply permanently:

Resistance thermometer Basic version [°C (°F)]	
Tolerance	**Range**
Basic accuracy, Class B	-50 ... +400 (-58 ... +752)[1]
Increased accuracy, Class A	-30 ... +300 (-22 ... +572)
High degree of accuracy Class AA (1/3 B)	0 ... 150 (32 ... 302)

Resistance thermometer Increased vibration resistance [°C (°F)]	
Tolerance	**Range**
Basic accuracy, Class B	-50 ... +400 (-58 ... +752)[1]
Increased accuracy, Class A	-30 ... +300 (-22 ... +572)
High degree of accuracy Class AA (1/3 B)	0 ... 150 (32 ... 302)

Resistance thermometer Expanded measuring range [°C (°F)]	
Tolerance	**Range**
Basic accuracy, Class B	-196 ... +600 (-321 ... +1112)
Increased accuracy, Class A	-100 ... +450 (-148 ... +842)
High degree of accuracy, Class AA	-50 ... +250 (-58 ... +482)

[1] The requirements of IEC 60751 are being observed. In case of high requirements regarding long-term stability, Pt100 sensors "expanded measuring range" should be used for temperatures above 350 °C (662 °F).

Thermocouples

The tolerance classes of the thermocouples correspond with IEC 584/EN 60584:

Catalog versions

Type	**Basic accuracy, Class 2**	**Increased accuracy, Class 1**
N	-40 °C ... +333 °C ±2.5 °C (-40 °F ... +631 °F ±4.5 °F) 333 °C ... 1100 °C ±0.0075x|t[°C]| (631 °F ... 2012 °F ±0.0075x|t[°F]-32|)	-40 °C ... +375 °C ±1.5 °C (-40 °F ... +707 °F ±2.7 °F) 375 °C ... 1000 °C ±0.004x|t[°C]| (707 °F ... 1832 °F ±0.004x|t[°F]-32|)
K	-40 °C ... +333 °C ±2.5 °C (-40 °F ... +631 °F ±4.5 °F) 333 °C ... 1000 °C ±0.0075x|t[°C]| (631 °F ... 1832 °F ±0.0075x|t[°F]-32|)	-40 °C ... +375 °C ±1.5 °C (-40 °F ... +707 °F ±2.7 °F) 375 °C ... 1000 °C ±0.004x|t[°C]| (707 °F ... 1832 °F ±0.004x|t[°F]-32|)
J	-40 °C ... +333 °C ±2.5 °C (-40 °F ... +631 °F ±4.5 °F) 333 °C ... 750 °C ±0.0075x|t[°C]| (631 °F ... 1382 °F ±0.0075x|t[°F]-32|)	-40 °C ... +375 °C ±1.5 °C (-40 °F ... +707 °F ±2.7 °F) 375 °C ... 750 °C ±0.004x|t[°C]| (707 °F ... 1382 °F ±0.004x|t[°F]-32|)

© Siemens 2020

Other thermocouples, ignoble

Type	Basic accuracy, Class 2	Increased accuracy, Class 1
T	-40 °C ... 133 °C ±1 °C (-40 °F ... +271 °F ±1.8 °F) 133 °C ... 350 °C ±0.0075x|t[°C]| (271 °F ... 662 °F ±0.0075x|t[°F]-32|)	-40 °C ... +125 °C ±0.5 °C (-40 °F ... +257 °F ±0.9 °F) 125 °C ... 350 °C ±0.004x|t[°C]| (257 °F ... 662 °F ±0.004x|t[°F]-32|)
E	-40 °C ... +333 °C ±2.5 °C (-40 °F ... +631 °F ±4.5 °F) 333 °C ... 900 °C ±0.0075x|t[°C]| (631 °F ... 1652 °F ±0.0075x|t[°F]-32|)	-40 °C ... +375 °C ±1.5 °C (-40 °F ... +707 °F ±2.7 °F) 375 °C ... 800 °C ±0.004x|t[°C]| (707 °F ... 1472 °F ±0.004x|t[°F]-32|)

Other thermocouples, noble

Type	Basic accuracy, Class 2	Increased accuracy, Class 1
R and S	0 °C ... 600 °C ±1.5 °C (32 °F ... 1112 °F ±2.7 °F) 600 °C ... 1600 °C ±0.0025x|t[°C]| (1112 °F ... 2912 °F ±0.0025x|t[°F]-32|)	0 °C ... 1100 °C ±1 °C (32 °F ... 2012 °F ±1.8 °F) 1100 °C ... 1600 °C ±[1 + 0.003 x(t - 1100)] °C (2012 °F ... 2912 °F ±1.8+0.003x(t[°F]-2012))
B	600 °C ... 1700 °C ±0.0025x|t[°C]| (1112 °F ... 3092 °F ±0.0025x|t[°F]-32|)	

SITRANS TS300 Clamp-on

Measuring accuracy	
Reference conditions	
• Pipe	Pipe 13 x 1.5 mm (0.51 x 0.06 inch) made of stainless steel using thermal paste
• Ambient temperature	20 °C (68 °F)
• Medium	Water 120 °C (248 °F)
• Flow velocity	3 m/s (9.84 ft/s)
Measuring accuracy when using thermal paste	Process-optimized for steam sterilization
(The accuracy is dependent on the geometry of the pipe, the medium and the ambient conditions. T_M = Process temperature; T_A = Ambient temperature)	
• Class A according to IEC 60751	-40 ... +150 °C (-40 ... 302 °F) (T_A-T_M) x 0.02

Measuring technology: Response times

Response time describes the speed of the measurement system in the case of a temperature change, and is typically indicated as T0.5 or T0.9. The values indicate the time in which a measured value has increased to 50% or 90% of the actual temperature increase.

The main variables which affect response time are as follows:

- Thermowell geometry, ideal are:
  - Very little material at the tip
  - use of conductive material
- Thermal connection of measuring insert to the thermowell: Because of design changes implemented for the measuring insert (small gap width, spring system), Siemens measuring inserts feature very good response behavior. Because of the good fit, additional contact materials are not usually required except in certain applications, e.g. attachment of a surface sensor.
- Size of temperature increase
- Medium and flow rate

Resistance thermometer

Typical values as per DIN EN 60751 in water at 0.4 m/s can be found in the following table.

Thermowell form	Diameter [mm (inch)]	T0.5	T0.9
Without	6 (0.24)	6	15
Straight (2)	9 (0.35)	34	90
	12 (0.47)	45	143
Tapered (3)	12 (0.47)	15	31
Barstock (4) U/C = 65	24 (0.95)	40	100
Barstock (4) U/C = 125	24 (0.95)	40	110

Thermocouples

Typical values as per DIN EN 60751 in water at 0.4 m/s can be found in the following table.

Thermowell form	Diameter [mm (inch)]	T0.5	T0.9
Without	6 (0.24)	2	4
Straight (2)	9 (0.35)	20	63
	12 (0.47)	19	66
Tapered (3)	12 (0.47)	7	22
Barstock (4) U/C = 65	24 (0.95)	22	73
Barstock (4) U/C = 125	24 (0.95)	20	53

© Siemens 2020

Measuring technology: Mounting depth

Measuring insert

Type	Temperature-sensitive length (TSL) [mm (inch)]	Non-bendable length [mm (inch)]
Basic	50 (1.97)	30 (1.82)
Increased vibration resistance	50 (1.97)	30 (1.82)
Expanded measuring range	50 (1.97)	60 (2.36)
Thermocouple	20 (0.79)	5 (0.20)

Immersion depth/contact with medium

The "heat transfer error" arises depending on the ambient conditions (temperature/weather/insulation) and the size of the thermowell, process connection and pipe.

To prevent such an error, the immersion depth and diameter of the thermowell are defined. The temperature-sensitive length (TSL) of the thermowell must also be taken into account. The following rule of thumb can be used:

- Water
  Immersion depth ≥ TSL + 5 x Ø of thermowell
- Air
  Immersion depth ≥ TSL + 10 ... 15 x Ø of thermowell
- Recommendations
  - Select largest possible submersion depth
  - Select measuring location with higher flow velocity
  - Insulate outer components of thermometer
  - Smallest possible surface for outer components
  - Insertion in tube bends
  - Direct measurement without additional thermowell if no suitable solution can be found using other measures

Measuring technology: Connection types

For resistance thermometers, the type of sensor connection directly affects the level of accuracy:

2-wire connection

The resistance of sensor lines are included in the measurement result as an error. Adjustments are recommended in this case.

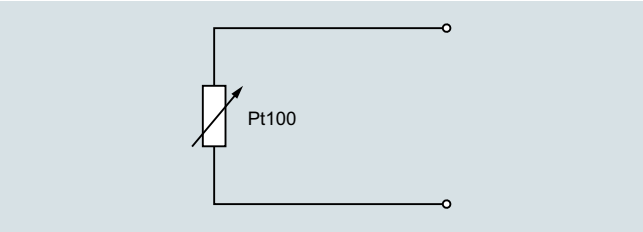

Pt100 2-wire connection

3-wire connection

Line resistance is not included in the measurement result. Requirements: all terminal and line resistances (corrosion) are at the same level, and terminals are at the same temperature level.

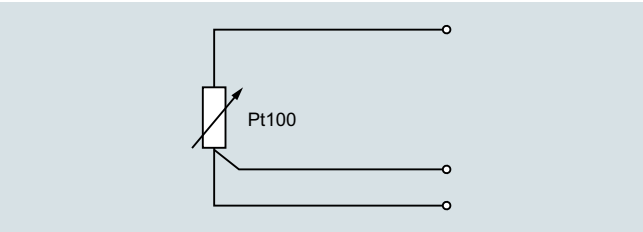

Pt100 3-wire connection

4-wire connection

Line resistance is not included in the measurement result. This type of connection is the most secure and most accurate.

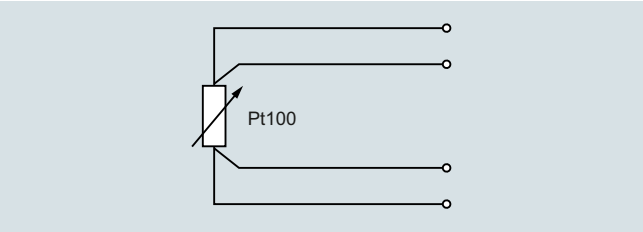

Pt100 4-wire connection

Siemens measuring inserts can be used to implement all types of connections for 1 x Pt100 devices. In the case of 2 x Pt100 versions, 2 and 3-wire connections are also possible. For measurement-related reasons, we always recommend a 1 x 4-wire or 2 x 3-wire connection.

© Siemens 2020

2

Temperature influence

At connection head TS500 [1)]

	Without transmitter [°C (°F)]	With suitable transmitter [°C (°F)]
A heads AG0/AH0/AU0/AV0 non-SIL[2)]	-50 ... +100 (-58 ... +212)	-50 ... +80 (-58 ... +176)
Aluminum or stainless steel	-40 ... +100 (-40 ... +212)	-40 ... +80 (-40 ... +176)
Plastic	-40 ... +85 (-40 ... +185)	-40 ... +80 (-40 ... +176)

1) In the case of applications in hazardous areas, observe information in manual.

2) Check cable gland and transmitter (e.g. not for Han 7, M12).

Special climatic conditions

SITRANS TS100, TS200, TS500 and TSinsert achieve the following classes of application according to IEC 60654-1 for use in tropical climates:

- C3 for sheltered locations
- D2 for outdoor locations

At connection site cable/plug-in connection TS100/200

The specified measuring range applies to the hot side of the sensor. The maximum permitted temperature at the cold end depends on the cables and plugs used. <°80°C (176 °F) is considered non-critical.

Influence of extension

The illustration below assists you in selecting the right length for the neck tube. In this case, the following applies: Connection head temperature = Ambient temperature + Overtemperature. The temperature in the connection head can thus be assessed as follows:

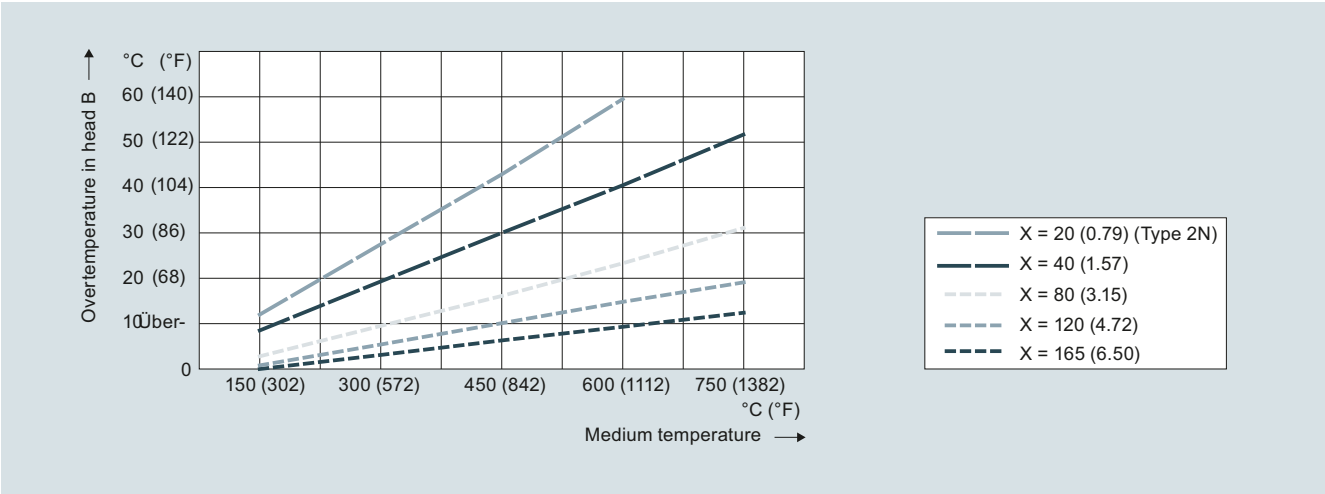

Extension length X, influence on temperature, dimensions in mm (inch)

Please note that guidance values may change due to local conditions. Please consider these potential changes particularly with respect to explosion protection.

Also note that the accuracy of the transmitter also depends on the temperature in the connection head.

© Siemens 2020

SITRANS TS300 Clamp-on

Design	
Measuring insert	• Special measuring insert made of stainless steel; hygienic design • Measuring element made of silver, thermal decoupling through plastic insert Measuring insert screwed into collar with spring tension. Use thermo-lubricant (see accessories) prior to mounting the device.
Pipe collar	
• Material	Temperature-resistant, high-performance plastic with integrated insulation system in hygienic design
• Ambient temperature influence	Approx. 0.2%/10 K

Process connection/thermowell

Process parameters may only allow one specific technology for the selection of process connections. You also have to observe regional, standard-based and customer-specific requirements. The range of products therefore includes a broad selection of standard connections.

In the case of redesigned or newly designed facilities, it is possible to achieve cost savings by implementing various measures:

- Use of standard lengths through clever selection of screw-in, weld-in or flange sockets
- Moveable compression fittings

The thermal stability of a material for process connection and thermowell also limits the application area of the temperature sensor. The temperature range specified on the type plate always refers to the measuring insert, not the material which comes into contact with media. Two aspects must be considered when assessing temperature stability:

- What maximum temperature may the material reach without a load?
- What is the behavior under load?

Pressure Equipment Directive

This device is not covered by the Pressure Equipment Directive; classification as per the Pressure Equipment Directive (PED 2014/68/EU), Directive 1/40; Section 1, Subsection 2.1.4

Process load

Because of the large variety of possible applications and variables, it is not possible to make general binding statements regarding the resilience of components which comes into contact with media. The load diagrams below can be used for common applications. However, where operating conditions vary significantly, please contact our technical support team.

Load on the thermowell and remedies:

The process itself	Correction options
Temperature	Material selection
Pressure	Thermowell design
Flow velocity	Installation length, thermowell form
Viscosity	Installation length, thermowell form
Vibration	Support against vibration
Corrosiveness	Material selection, coating, covering
Abrasion (e.g. carbon dust)	Sensing rod, coating

© Siemens 2020

Load diagrams

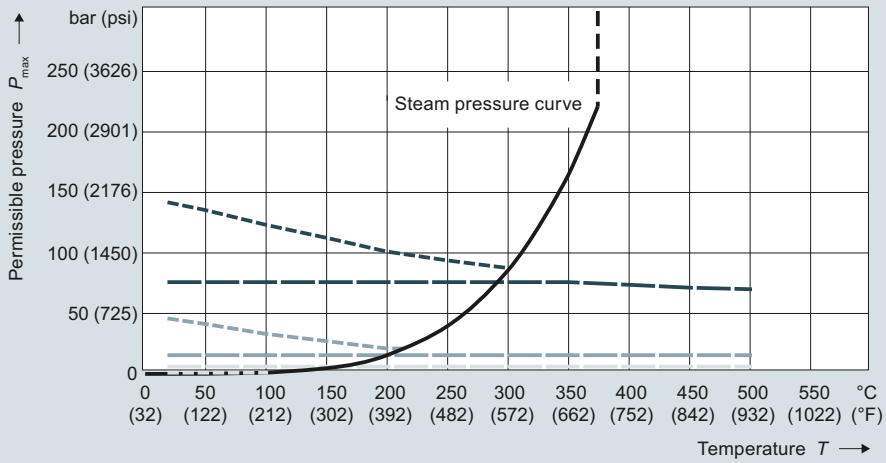

Form 2/2G/2N/2F Ø9x1 (0.35x0.04)
Material No. 1.4571

	U	Speed v
- - - - -	140 (5.51)	v_W = 3 m/s (9.84 ft/s)
- - - - -	315 (12.40)	
- - - - -	510 (20.08)	
———	140 (5.51)	v_L = 25 m/s (82.02 ft/s)
———	315 (12.40)	
———	510 (20.08)	

Thermowells with diameter of Ø 9 x 1 mm (0.35 x 0.04), dimensions in mm (inch)

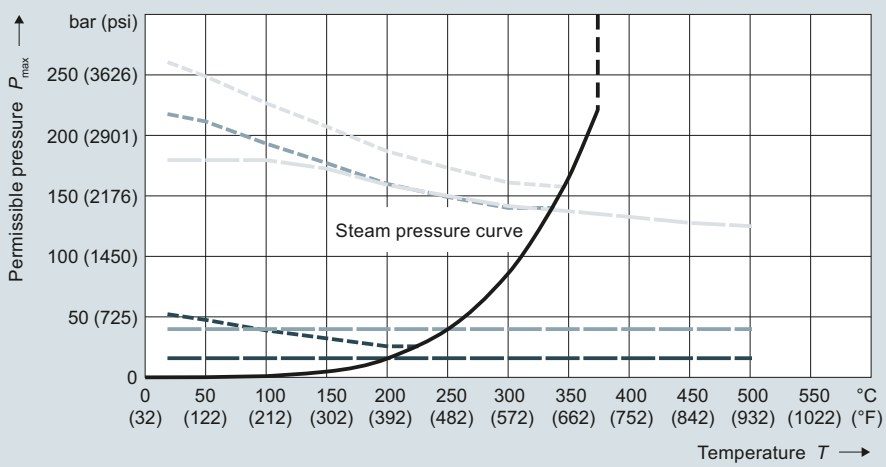

Form 2/2G/2N/2F Ø12x2.5 (0.47x0.10)
Material No. 1.4571

	U	Speed v
- - - - -	140 (5.51)	v_W = 3 m/s (9.84 ft/s)
- - - - -	315 (12.40)	
- - - - -	510 (20.08)	
———	140 (5.51)	v_L = 25 m/s (82.02 ft/s)
———	315 (12.40)	
———	510 (20.08)	

Thermowells Ø 12 x 2.5 mm (0.47 x 0.10 inch), dimensions in mm (inch)

© Siemens 2020

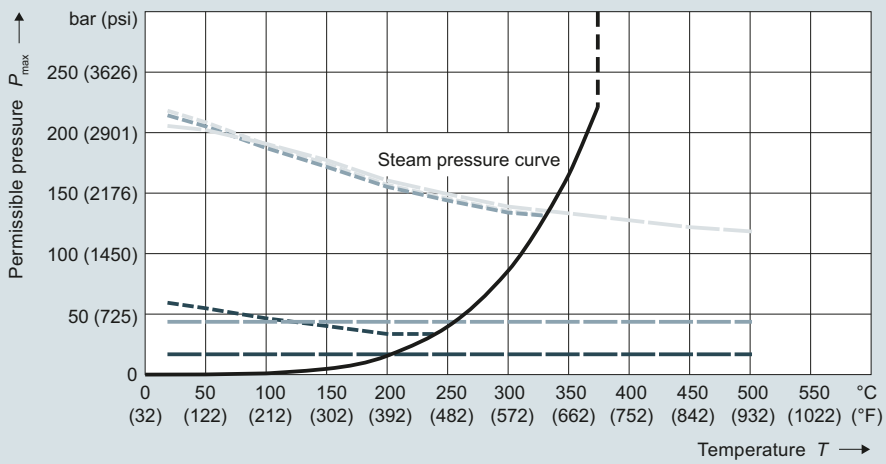

Form 3/3G/3F Ø12x2.5 (0.47x0.10)
Material No. 1.4571

	U	Speed v
	140 (5.51) 315 (12.40) 510 (20.08)	v_W = 3 m/s (9.84 ft/s)
	140 (5.51) 315 (12.40) 510 (20.08)	v_L = 25 m/s (82.02 ft/s)

Thermowells Ø 12 x 2.5 mm (0.47 x 0.10 inch), Ø14 x 2.5 mm (0.55 x 0.10 inch), dimensions in mm (inch)

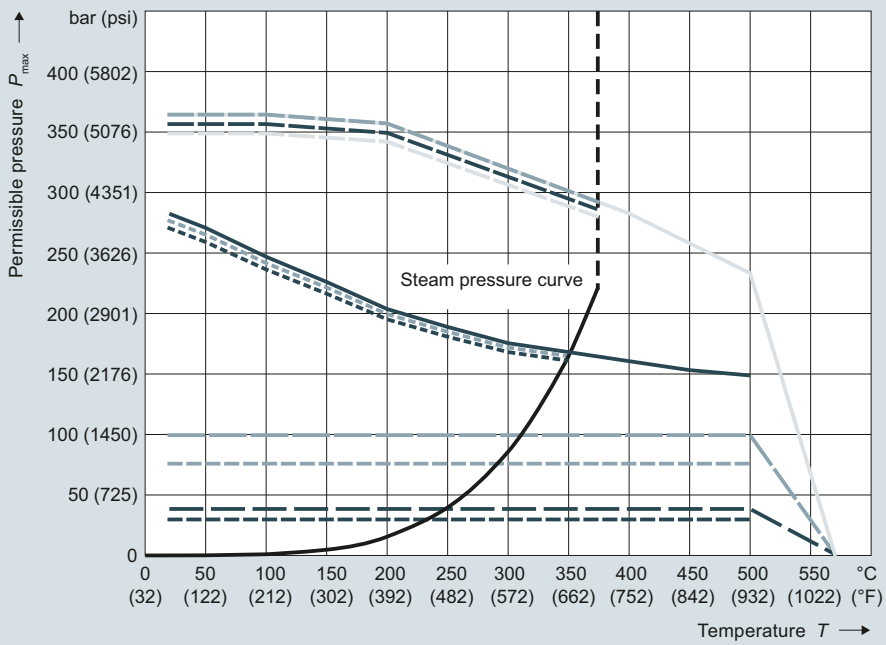

Form 4/4F Ø24 (0.94); C=65 (2.56)
Material No. 1.4571

	U	Speed v
	140/510 (5.51/20.08) 315 (12.40)	v_W = 5 m/s (16.40 ft/s)
	140 (5.51) 315 (12.40) 510 (20.08)	v_L = 40 m/s (131.20 ft/s)

Form 4/4F Ø24 (0.94); C=65 (2.56)
Material No. 1.7335

	U	Speed v
	140 (5.51) 315 (12.40) 510 (20.08)	v_W = 5 m/s (16.40 ft/s)
	140 (5.51) 315 (12.40) 510 (20.08)	v_L = 40 m/s (131.20 ft/s)

Thermowells Ø 24 mm (0.95 inch), C= 65 mm (2.60 inch), dimensions in mm (inch

© Siemens 2020

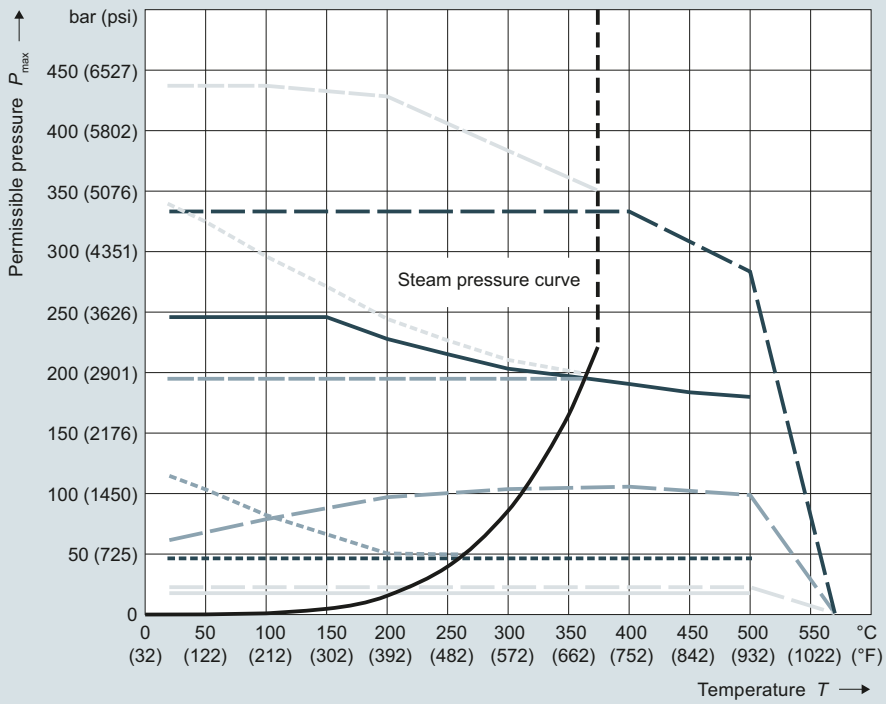

Form 4/4F Ø18 (0.71); C=65 (2.56)
Material No. 1.4571

	U	Speed v
	140/315 (5.51/12.40) 510 (20.08)	v_W = 5 m/s (16.40 ft/s)
	140 (5.51) 315 (12.40) 510 (20.08)	v_L = 40 m/s (131.20 ft/s)

Form 4/4F Ø18 (0.71); C=65 (2.56)
Material No. 1.7335

	U	Speed v
	140/315 (5.51/12.40) 510 (20.08)	v_W = 5 m/s (16.40 ft/s)
	140 (5.51) 315 (12.40) 510 (20.08)	v_L = 40 m/s (131.20 ft/s)

Thermowells Ø 18 mm (0.71 inch), C= 65 mm (2.60 inch), dimensions in mm (inch)

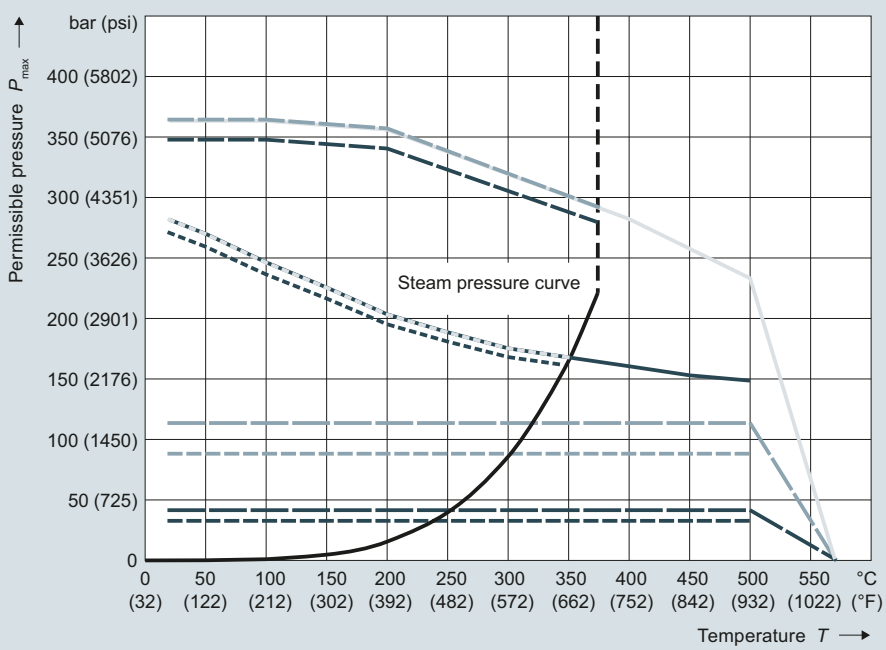

Form 4/4F Ø24 (0.94); C=125 (4.92)
Material No. 1.4571

	U	Speed v
	140/315 (5.51/12.40) 510 (20.08)	v_W = 5 m/s (16.40 ft/s)
	140 (5.51) 315 (12.40) 510 (20.08)	v_L = 40 m/s (131.20 ft/s)

Form 4/4F Ø24 (0.94); C=125 (4.92)
Material No. 1.7335

	U	Speed v
	140/315 (5.51/12.40) 510 (20.08)	v_W = 5 m/s (16.40 ft/s)
	140 (5.51) 315 (12.40) 510 (20.08)	v_L = 40 m/s (131.20 ft/s)

Thermowells Ø 24 mm (0.95 inch), C= 125 mm (4.92 inch), dimensions in mm (inch)

© Siemens 2020

Thermowell calculation

Properly applied load diagrams will provide a sufficient degree of safety for the thermowell dimensioning of most applications.

However, there are cases in which operating conditions deviate too greatly from standard parameters. In this case, a customized thermowell calculation can be displayed.

Another reason for doing this calculation is the fact that flowing media can create turbulence at the tip of the thermowell under certain conditions. The thermowell will then vibrate and may even be destroyed if not configured correctly. This is the most frequent cause of thermowell failure.

Siemens can offer thermowell calculations according to the two recognized procedures upon request.

- Dittrich/Klotter method
- ASME PTC19.3-TW2016 method
  This method also takes into account turbulence formation on a mathematical level.

Both methods provide a high degree of safety with regard to thermowell configuration, however, they do not provide a guarantee against failures. A recalculation may be necessary in case of changes to the process parameters.

Materials

Material descriptions/Standards comparison				**Max. temperature [°C (°F)] (unloaded)**	**Properties**	**Applications**
Mat. No.:	**AISI/Trade name:**	**EN 10028-2:**	**Description**			
1.4404 or 1.4435	AISI 316 L	X2CrNiMo17-12-2	Austenitic stainless steel	550 (1 022)	Good acid resistance, resistant against grain boundary corrosion	Chemical industry, waste treatment, paper and cellulose industry, food industry
1.4571	AISI 316 Ti	X6CrNiMoTi1712-2	Austenitic stainless steel	600 (1 112)	Good acid resistance, resistant against grain boundary corrosion (supported by TI portion)	Chemical industry, textile industry, paper and cellulose industry, water supply, food and pharmaceuticals
1.5415	A 204 Gr.A	16Mo3	Carbon steel, high-alloy	500 (932)	Resistant at higher temperatures, well suited for welding	Steam turbines, steam lines, water pipes
1.7335	A 182 F11	13CrMo4-5	Carbon steel, high-alloy	540 (1 004)	Resistant at higher temperatures, well suited for welding	Steam turbines, steam lines, water pipes
1.4841	SS 314	X15CrNiSi25-20	Austenitic heat-resistant stainless steel	1 150 (2 102)	Resistant at high temperatures, also resistant against low-O_2 gases and gases containing nitrogen.	Flue gas, petrochemical industry, chemicals industry, power plants
1.4762	446	X10CrAl24	Ferritic heat-resistant steel	1 150 (2 102)	Resistant at high temperatures, in oxidizing and reducing sulfur-containing atmosphere	Chemical industry, power plants, steel industry, waste gas treatment
2.4819	Hastelloy C 276	NiMo16Cr15W	Nickel-Chrome-Molybdenum alloy	1 100 (2 012)	Resistant at high temperatures, in oxidizing and reducing atmosphere, resistant against pitting and crevice corrosion, good corrosion resistance after welding	Chemicals industry, paper and cellulose industry, waste treatment, waste incinerators, emissions controls, shipbuilding and offshore industry
2.4360	Monel 400	NiCu30Fe	Nickel-copper alloy	500 (932)	Excellent corrosion resistance, particularly against chloride-induced cold crack corrosion	Chemical industry, offshore industry, nuclear technology, petrochemical industry
Similar to 1.0305	A105		Carbon steel	400 (752)		Steam turbines, steam lines, water pipes
1.4410	Similar to A2507	X2CrNiMoN 22-7-4	Austenitic-ferritic super duplex steel	300 (572)	Excellent resistance especially to chloride-related gap and pitting corrosion	Chemical Industry and petroleum chemistry, seawater desalination plants, paper pulp industry
1.4462	Similar to AISI 318 LN	X2CrNiMoN22-5-3	Austenitic-ferritic duplex steel	250 (482)	Resistance especially to chloride-related gap and pitting corrosion	Chloride contaminated water, acidic gas conditions, petrochemicals, marine technology

Where cost-intensive materials are used with flange thermowells, cost savings can be achieved by using a so-called flanged wheel. A thin disc of the material which comes into contact with media is applied prior to the flange (ordinary stainless steel).

Materials of sensor tube/measuring insert:

- SITRANS TSInsert, TS100, TS200
  - Resistance thermometer Cr-Ni-Mo
  - Thermocouple 2.4816/Inconel600

© Siemens 2020

Vibration resistance of measuring insert, cable sensor

Similar to the thermowell, the equipment also creates inner (Karman vortices) and outer vibration inducements which act on the measuring insert. For this reason, a special assembly of measurement elements is required. Other than a few exceptions for cable and compact thermometers, Siemens only produces sensors with a mineral-insulated plastic-sheathed cable. Together with precautions taken when installing the measuring element, the Siemens basic version already exceeds EN 60751 by more than a factor of 3. Pursuant to the measurement methods of this standard, the following values are obtained (tip-tip):

- 10 g: Basic version and expanded measuring range
- 60 g: Increased vibration resistance and thermocouple

Bending ability of measuring insert/cable sensor

All Siemens SITRANS TSinsert measuring inserts are made with a mineral-insulated plastic-sheathed cable (MIC). The same applies to a portion of the cable and compact thermometer. In addition to the already described properties, another advantage of the plastic-sheathed cable is its bending ability. This makes it possible to install these thermometers even in difficult to access areas. Ensure that the following minimum bending radius is observed:

Ø MIC [mm] (inch)	R_{max} = 4x Ø MIC [mm] (inch)
3 (0.12)	12 (0.48)
6 (0.24)	24 (0.95)

Where a smaller bending radius is required due to installation conditions, subsequent testing of the insulation resistance is recommended.

The bending ability of the mineral-insulated design allows for economical transport even of large lengths. As of a length of 0.8 m, the sensors can be delivered rolled or bent. If slight bends have arisen due to mechanical loads during transport or handling, the quality and function of the sensor are not impacted by this. The bends can easily be straightened.

Electrical stability

Insulation resistance

The insulation resistance between each measuring circuit and the fitting is tested at a voltage of 500 V DC at room temperature.

$R_{iso} \geq 100\ M\Omega$

Due to the property of the mineral-insulated cable, the insulation resistance decreases as temperature increases. Because of the special production method, it is however possible to achieve very good values even at high temperatures.

Wire resistance

For 2-wire connections, the wire resistance is considered in the measurement result. The following rule of thumb can be used:

- ∅ Measuring insert 3 mm (0.12 inch) 5 Ω/m or 12.8 °C (55.04 °F)
- ∅ Measuring insert 6 mm (0.24 in) 2.8 Ω/m or 7.1 °C (44.78 °F)

Therefore, a 3 or 4-wire connection is urgently recommended.

Tests

In addition, statutory, standards-based or operating specifications also require additional testing. The results are attested in certificates according to EN 10204:

- According to EN 10204-2.1, order conformity (C35)
  Certificate in which Siemens confirms that the delivered products correspond to the requirements of the order, without specification of test results. The testing does not have to be carried out on the delivered devices.
- According to EN 10204-3.1
  Certificate in which Siemens confirms that the delivered products meet the requirements set out in the order, with indication of the specification of test results. Testing is carried out by an organization which is independent of production. The inspection certificate 3.1 replaces 3.1.B of the previous edition.
- Material certificate for parts which come into contact with media (C12)
  This certificate confirms the properties of the material and warrants traceability up to the melting batch.
- Pressure test (C31)
  Hydrostatic pressure test on thermowell. Internal pressure for thread and weld-in, external pressure for flange forms.
- Helium leak test (C32)
  This test can be used to detect even the smallest leaks in thermowells and weld seams.
- Dye-penetration-test (C33)
  The color penetration method can detect tears and other surface defects.
- Comparative test (calibration) (Y33)
  The test object is measured in one temperature direction against a highly precise thermometer, and the measured values of test object and normal object are documented. However, calibration requires the measuring insert to be of a certain minimum length. Measuring inserts can be calibrated together with the associated transmitter. Calibration values can be stored in the transmitter in order to increase the measuring accuracy of the system.
- According to EN 10204-3.2
  This type of acceptance certificate can be prepared on request, together with an acceptance representative of the ordering party or a representative indicated by official requirements (e.g. TÜV). It confirms that the delivered products meet the requirements set out in the order; it also contains the test results.
- Welding documentation
  documentation such as WPS and PQR are available on our website.

© Siemens 2020

Approvals

Explosion protection

Due to the variety of requirements, all flameproof versions, as well as those complying with CSA and FM are supplied without cable glands. The Ex markings can be found in the current manual A5E03920348, section "Certificates and approvals".

Designator	Additional information	Region	Standard	Type of protection	For Zone	For Division
TSinsert TS100 TS200	E00	EU/AU/NZ	CE/RCM	Without Ex protection		-
	E17	US/CA	cCSAus			-
	E54	CN				-
	E80	EAC	TR			-
	E01	EU/AU/NZ	ATEX, IECEx	Intrinsic safety "i"/"IS"	0…2/20…22	-
	E18	US/CA	cCSAus		0…2/20…22	1/2
	E55	CN	NEPSI		0…2/20…22	-
	E81	EAC	EACEx		0…2/20…22	-
TS500	E00	EU/AU/NZ	CE/RCM	Without Ex protection		-
	E10	US/CA	cFMus			-
	E17	US/CA	cCSAus			-
	E54	CN				-
	E80	EAC	TR			-
	E01	EU/AU/NZ	ATEX, IECEx	Intrinsic safety "i"/"IS"	0*…2/20*…22	-
	E18	US/CA	cCSAus		0*…2/20*…22	1/2
	E55	CN	NEPSI		0*…2/20*…22	-
	E81	EAC	EACEx		0*…2/20*…22	-
	E03	EU/AU/NZ	ATEX, IECEx	Flameproof enclosure "d"/"XP" dust protection through enclosure "t"/"DIP" only with connection heads code AG0, AH0, AU0, AV0	0*…2/20*…22	-
	E13 (7MC750, NPT only)	US/CA	cFMus		1/21	1/2 (aluminum head)
	E14 (metric)	US/CA	cFMus		1/21	1/2 (aluminum head)
	E20 (NPT)	US/CA	cCSAus		0*…2/20*…22	1/2
	E21 (metric)	US	CSAus		0*…2/20*…22	-
	E56	CN	NEPSI		0*…2/20*…22	-
	E82	EAC	EACEx		0*…2/20*…22	-
	E04	EU/AU/NZ	ATEX, IECEx	Non-sparking "ec"	2	-
	E16	US/CA	cFMus	Non-sparking "nA"/"NI"	2	-
	E23	US/CA	cCSAus		2	2
	E57	CN	NEPSI		2	-
	E83	EAC	EACEx		2	-
	AU = Australia; CA = Canada; CN = China; EAC = Eurasian Customs Union; EU = Europe; US = USA					

* Zone 0 to process connection, outside Zone 1

Marine approvals

Designator	Additional information	Approval
TSinsert TS100 TS200 TS500	D01	Det Norske Veritas Germanischer Lloyd (DNV GL)

© Siemens 2020

Circuit diagrams

Resistance thermometer connection

SITRANS TSinsert measuring inserts are, unless otherwise mentioned, designed as single Pt100 measuring inserts with a 4-wire connection. This makes it possible to implement all of the aforementioned connection types.

Double Pt100 measuring inserts (only possible with 6 mm outside diameter) are designed as 3-wire connection.

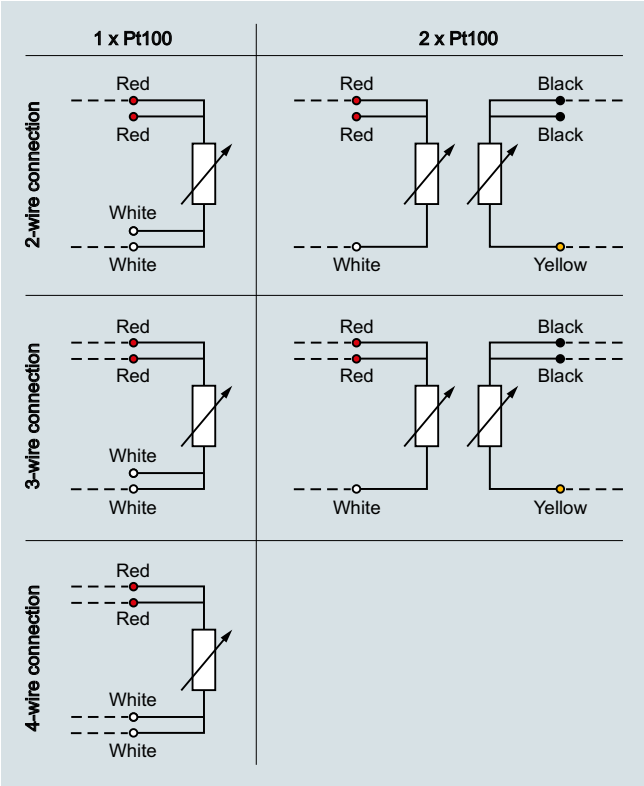

Circuit diagrams 1 x Pt100-2W to 2 x Pt100-4W

Thermocouple connection

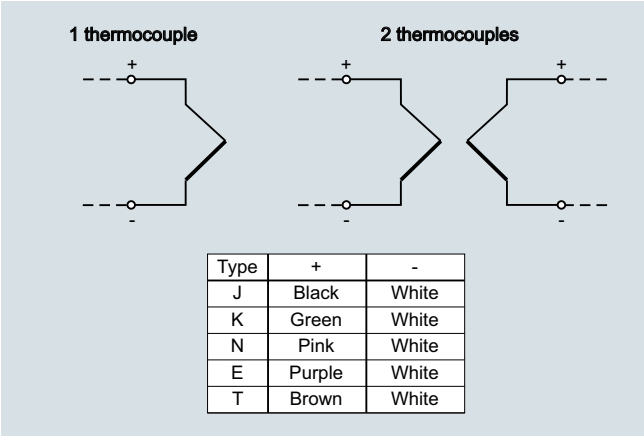

Type	+	-
J	Black	White
K	Green	White
N	Pink	White
E	Purple	White
T	Brown	White

Circuit diagram for thermocouple

If thermocouples are used, the use of head transmitters offers particular advantages: The reference junction is already integrated in the universal transmitter. There is no need for expensive extension or compensating cables. This also removes a number of possible error sources. The weak millivolt signal of the thermocouple is already converted into a stable and temperature-linear DC or bus signal on site. This drastically reduces the effects of electromagnetic factors on the measurement result.

If a head transmitter is not installed, the sensor supply cable consists of the appropriate extension or compensating cable. The thermo line is made from the thermocouple material of the relevant thermocouple, while the compensating cable uses a cost-effective substitute material. The electrical behavior of the compensating cable is similar to that of the thermo line within a limited temperature range of up to 200 °C.

A wide spectrum of color coding exists for thermocouples on an international level. This must be taken into account during the connecting process.

Country	**International/ Germany**			**North America**			**UK/Czech Republic**		
Standard	Not intrinsically safe[1)]			Compensating cable[2)]			BS 1843		
	Jacket	+	-	Jacket	+	-	Jacket	+	-
N	PN	PN	WH	OG	OG	RD	OG	OG	BU
K	GN	GN	WH	YE	YE	RD	RD	BR	BU
J	BK	BK	WH	BK	WH	RD	BK	YE	BU
T	BR	BR	WH	BU	BU	RD	BU	WH	BU
E	VT	VT	WH	VT	VT	RD	BR	BR	BU
R+S	OG	OG	WH		BK	RD	GN	WH	BU
B	GY	GY	WH	GY	GY	RD	-	-	-

1) For intrinsically safe cable as per IEC 584-3, the jacket is always blue.
2) With thermo lines as per ANSI MC96, the jacket is always blue.

Country	**Netherlands**			**Japan**			**France**		
Standard	DIN 43714			ISC 1610-198			NF C42-323		
	Jacket	+	-	Jacket	+	-	Jacket	+	-
N	-	-	-	-	-	-	-	-	-
K	GN	RD	GN	BU	RD	WH	VT	VT	YE
J	BU	RD	BU	YE	RD	WH	BK	BK	YE
T	BR	RD	BR	BR	RD	WH	BU	BU	YE
E	BK	RD	BK	VT	RD	WH	OG	OG	YE
R+S	WH	RD	WH	BK	RD	WH	GN	GN	YE
B	GY	RD	GY	GY	RD	WH	-	-	-

Abbreviation for colors				
BK: black	BR: brown	BU: blue	GD: gold	GN: green
GY: gray	OG: Orange	PN: pink	RD: red	SR: silver
TQ: turquoise	VT: Violet	WH: white	YE: yellow	

© Siemens 2020

Device plugs

In some cases, sensors are not connected directly but using device plugs. The connection is made according to the figures below.

Lemo 1S coupling (SITRANS TS100/TS200)

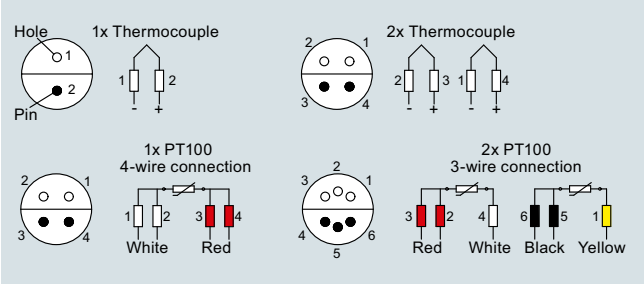

M12 device plug for single sensors (SITRANS TS100/TS200/TS500)

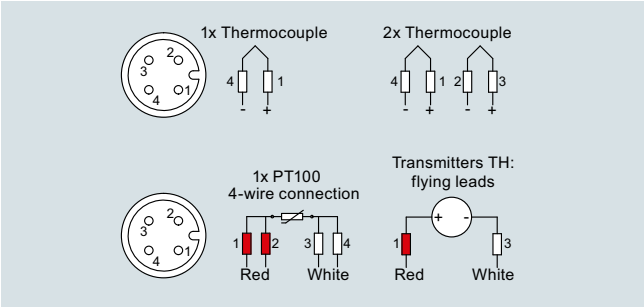

M12 device plug for single sensors (SITRANS TS300)

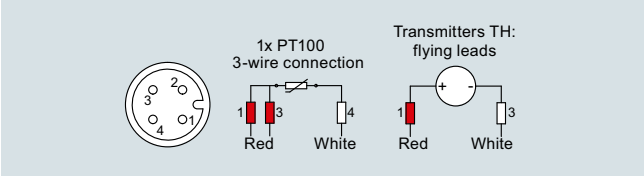

M12 device plug for dual sensors (SITRANS TS100)

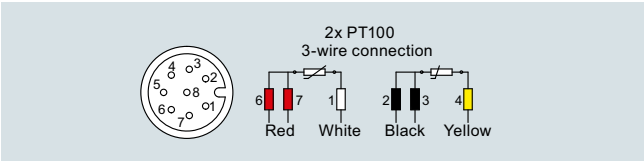

Han 7D device plug (SITRANS TS500)

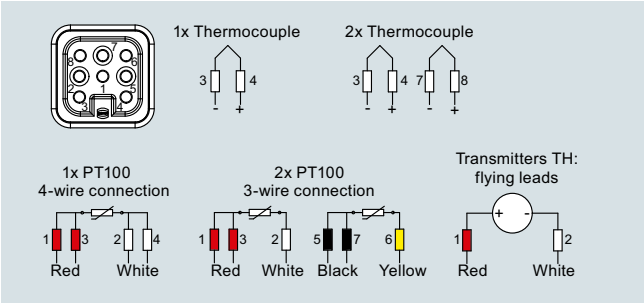

Transmitter connection

If SITRANS TH transmitters are used in the connection head of the temperature sensor, connection takes place according to the following pattern:

SITRANS TH100/TH200/TH300

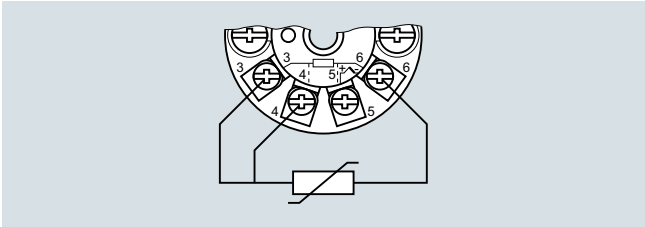

Resistance thermometer

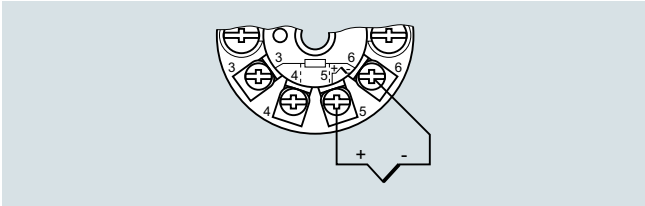

Thermocouples

SITRANS TH400

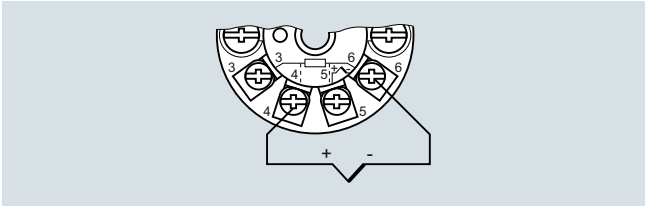

SITRANS TS500 TH transmitter display

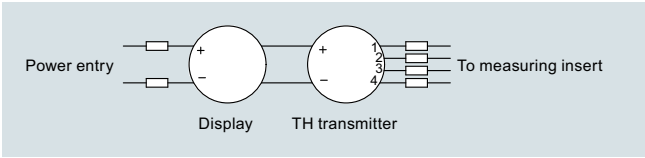

In addition, our transmitters also allow for a large number of other possible connections (e.g. difference, mean value, 2 sensors). More information can be obtained at:
http://www.siemens.com/temperature

© Siemens 2020

Detailed product overview

Overview

Type	TSinsert	TS100	TS200
Description	Measuring inserts	Temperature sensors in cable version	Temperature sensors in compact version
Application	Replaceable	Universal use	Universal use
Version	Mineral-insulated version	Mineral-insulated version	Mineral-insulated version
Type	As European or American type	For unfavorable space conditions	For unfavorable space conditions
Image	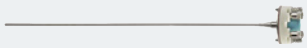		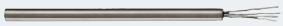
Catalog page	2/100	2/41	2/44
Article No.	7MC70*	7MC711*	7MC72*
Material, in contact with media	Cr-Ni-Mo(RTD); 2.4816(TC) (Cr-Ni-Mo; Inconnel600)	1.4404(RTD); 2.4816(TC) (316L; Inconnel600)	1.4404(RTD); 2.4816(TC) (316L; Inconnel600)
Thermowell forms	Order separately	Without/with separate thermowell	Without/with separate thermowell
Process connections	-	• Compression fittings • Surface connection piece for installation on flat surfaces/tubes • Soldering nipple: - G ¼, G ½ - ½ NPT - M8x1, M18x1.5 • Surface connection piece for installation on flat surfaces/tubes	• Compression fittings • Surface connection piece for installation on flat surfaces/tubes • Soldering nipple: - G ¼, G ½ - ½ NPT - M8x1, M18x1.5 • Surface connection piece for installation on flat surfaces/tubes
Sensor elements	Pt100 + thermocouples	Pt100 + thermocouples	Pt100 + thermocouples
Sensor connection	• 1x4 wire • 2x3 wire	• 1x4 wire • 2x3 wire	• 1x4 wire • 2x3 wire
Sensor accuracy	• Class AA • Class A • Class B • Class 1 • Class 2	• Class AA • Class A • Class B • Class 1 • Class 2	• Class AA • Class A • Class B • Class 1 • Class 2
Connection heads	Type B (Type A pressure resistant)	• Cable, optional with misc. plugs	• Flying leads • Misc. plugs
Explosion protection (EU, CN, EAC, AU, NZ, US, CA)	Intrinsic safety "i"/"IS"	Intrinsic safety "i"/"IS"	Intrinsic safety "i"/"IS"
Output signal	Sensor signal: • 4 ... 20 mA (TH100/TH200) • HART (TH300) • PA (TH400) • FF (TH400)	Sensor signal	Sensor signal
Application	Spare parts	• Mechanical engineering • Storage temperature • Surfaces	• Mechanical engineering • Storage temperature • Surfaces
Limit temperatures[1)]	• Pt100 basic: -50 ... +400 °C (-58 ... +752 °F) • Pt100 expanded measuring range: -196 ... +600 °C (-321 ... +1112 °F) • Thermocouple: -40 ... +1100 °C (-40 ... +2012 °F) (type-dependent)	• Pt100 basic: -50 ... +400 °C (-58 ... +752 °F) • Pt100 expanded measuring range: -196 ... +600 °C (-321 ... +1112 °F) • Thermocouple: -40 ... +1100 °C (-40 ... +2012 °F) (type-dependent)	• Pt100 basic: -50 ... +400 °C (-58 ... +752 °F) • Pt100 expanded measuring range: -196 ... +600 °C (-321 ... +1112 °F) • Thermocouple: -40 ... +1100 °C (-40 ... +2012 °F) (type-dependent)
Max. nominal pressure[1)](static pressure at 20 °C)	-	Compression fitting max. 10 bar (145 psi) Compression fitting: PTFE seal, temperature min./max. -20 ... +150 °C (-4 ... +302 °F)	Compression fitting max. 10 bar (145 psi) Compression fitting: PTFE seal, temperature min./max. -20 ... +150 °C (-4 ... +302 °F)
Min. response time $t_{0.5}$	2 ... 6 s	2 ... 6 s	2 ... 6 s
Degree of protection	IP54	See drawing page 2/10	See drawing page 2/10

1) Load combinations (temperature, flow, vibration, pressure) can at times significantly restrict these values. Further temperature limits result, for example, from thermowell materials with lower thresholds [(e.g. 1.4571 pressure resilient, 450 .... 550 °C (842 ... 1022 °F), limit temperature 800 °C (1472 °F)].

© Siemens 2020

Type	TS300 Modular	TS300 Clamp-on
Description	Temperature sensors for food, pharmaceuticals and biotechnology	Temperature sensors for food, pharmaceuticals and biotechnology
Application	Measurements submersed in medium (pipes and vessels)	Clamp-on measurement of tube surface temperature
Version	Thermowell similar to DIN 43772, type 2F and tapered design	Thermowell similar to DIN 43772, type 2F and tapered design
Type		
Image		
Catalog page	2/47	2/51
Article No.	7MC8005*	7MC8016
Material, in contact with media	1.4404 or 1.4435 (316L)	1.4404 or 1.4435 (316L)
Thermowell forms	Similar to 2F	Similar to 2F
Process connections	DIN 11851, clamp-on connection (Triclamp/ISO 2852/DIN 32676), Varivent, Ingold socket (Fermenter connection), Neumo Biocontrol, spherical weld-in sleeve Seals are not included in the scope of delivery	Clamp-on connections suitable for the following tube diameters: • Collar 4 ...57 mm (0.16 ... 2.24 inch) • Tensioning hook 6 ...50.8 mm (0.24 ... 2.00 inch) • Tensioning band 50 ... 200 mm (1.97 ... 7.87 inch)
Sensor elements	Pt100	Pt100
Sensor connection	• 1x4 wire • 2x3 wire	• 1x3 wire
Sensor accuracy	• Class A	• Class A • Process-optimized design
Connection heads	Type B	Type B
Explosion protection (EU, CN, EAC, AU, NZ, US, CA)	-	-
Output signal	Sensor signal: • 4 ... 20 mA (TH100/TH200) • HART (TH300) • PA (TH400) • FF (TH400)	Sensor signal: • 4 ... 20 mA TH100slim • HART (TH300) • PA (TH400) • FF (TH400)
Application	Surface roughness: Standard applications Ra < 1.5 µm (5.9 10^{-5} inch)	Surface roughness: Standard applications Ra < 1.5 µm (5.9 10^{-5} inch)
Limit temperatures[1)]	-20 to +400 °C (-4 to +752 °F)	-40 ... +150 °C (-40 ... +302 °F)
Max. nominal pressure[1)] **(static pressure at 20 °C)**	0 ... 150 (0 ... 5.91) 50 bar 150 ... 300 (5.91 ... 11.81) 40 bar	No pressure load due to clamp-on principle
Min. response time $t_{0.5}$	20 ... 34 s	4 s (see "Reference conditions SITRANS TS300 Clamp-on", page 2/22)
Degree of protection	IP54 ... IP68 depending on connection head, see page 2/18	IP65 for pipe collar, IP67 for electrical connection

1) Load combinations (temperature, flow, vibration, pressure) can at times significantly restrict these values. Further temperature limits result, for example, from thermowell materials with lower thresholds (e.g. 1.4571 pressure resilient, 450 .... 550 °C (842 ... 1022 °F), limit temperature 800 °C (1472 °F)).

© Siemens 2020

Detailed product overview

Type	TS500 for installation	TS500 Type 2	TS500 Type 2N
Description	Temperature sensors for the process industry (pipes and vessels)	Temperature sensors for the process industry (pipes and vessels)	Temperature sensors for the process industry (pipes and vessels)
Application	Temperature sensors for installation in existing thermowells	Tubular thermowell for low to medium stress	Tubular thermowell for low to medium stress
Version	Suitable for thermowells according to DIN 43772 as well as ASME B40.9-2001	Thermowell according to DIN 43772, type 2, without process connection	Thermowell type 2N similar to DIN 43772, screwed design
Type	With extension • European type • American type	• Without extension, plug-in • Use with moveable compression fittings	Without extension
Image		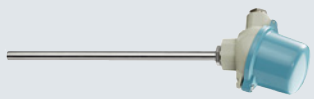	
Catalog page	2/94	2/55	2/60
Article No.	Nr. 7MC750*	7MC751*-0*(A/B)**-0***	7MC751*-1****-0***
Material, in contact with media	None: Measuring insert made of 1.4571, 1.4404 or 1.4435 (RTD); 2.4816 (TC) (316L; Inconnel600)	1.4404 or 1.4435; 1.4571 (316L; 316TI)	1.4404 or 1.4435; 1.4571 (316L; 316TI)
Thermowell forms	Order separately	Form 2	Form 2N (similar to Form 2)
Process connections	Connection to the thermowell: • M14x1.5 • M18x1.5 • G ½ • ½ NPT	Compression fittings • G ½ • ½ NPT For welding	• G ½ • ½ NPT
Installation length	• 110 mm (4.33 inch) • 140 mm (5.51 inch) • 200 mm (7.87 inch) • 260 mm (10.24 inch) • 410 mm (16.14 inch)	Variable	• 100 mm (3.94 inch) • 160 mm (6.30 inch) • 230 mm (9.06 inch) • 360 mm (14.17 inch) • 510 mm (20.08 inch)
Neck tube length	According to DIN 43772	According to DIN 43772	Non-adjustable X=20 mm (0.79 inch)
Sensor elements	Pt100 + thermocouples	Pt100 + thermocouples	Pt100 + thermocouples
Sensor connection	• 1x4 wire • 2x3 wire	• 1x4 wire • 2x3 wire	• 1x4 wire • 2x3 wire
Sensor accuracy	• Class AA • Class A • Class B • Class 1 • Class 2	• Class AA • Class A • Class B • Class 1 • Class 2	• Class AA • Class A • Class B • Class 1 • Class 2
Connection heads	Type B (Type A pressure resistant)	Type B (Type A pressure resistant)	Type B (Type A pressure resistant)
Explosion protection (EU, CN, EAC, AU, NZ, US, CA)	• Intrinsic safety "i"/"IS" • Flameproof enclosure "d"/"XP" • Non-sparking "ec"/"nA"/"NI"	• Intrinsic safety "i"/"IS" • Flameproof enclosure "d"/"XP" • Non-sparking "ec"/"nA"/"NI"	• Intrinsic safety "i"/"IS" • Flameproof enclosure "d"/"XP" • Non-sparking "ec"/"nA"/"NI"
Output signal	Sensor signal: • 4 ... 20 mA (TH100/TH200) • HART (TH300) • PA (TH400) • FF (TH400)	Sensor signal: • 4 ... 20 mA (TH100/TH200) • HART (TH300) • PA (TH400) • FF (TH400)	Sensor signal: • 4 ... 20 mA (TH100/TH200) • HART (TH300) • PA (TH400) • FF (TH400)
Application	Pipes and vessels	Pipes and vessels	Pipes and vessels
Limit temperatures[1]	• Pt100 basic: -50 ... +400 °C (-58 ... +752 °F) • Pt100 expanded measuring range: -196 ... +600 °C (-321 ... +1112 °F) • Thermocouple: -40 ... +1100 °C (-40 ... +2012 °F) (type-dependent)	• Pt100 basic: -50 ... +400 °C (-58 ... +752 °F) • Pt100 expanded measuring range: -196 ... +600 °C (-321 ... +1112 °F) • Thermocouple: -40 ... +1100 °C (-40 ... +2012 °F) (type-dependent)	• Pt100 basic: -50 ... +400 °C (-58 ... +752 °F) • Pt100 expanded measuring range: -196 ... +600 °C (-321 ... +1112 °F) • Thermocouple: -40 ... +1100 °C (-40 ... +2012 °F) (type-dependent)
Max. nominal pressure[1] **(static pressure at 20°C)** dimensions in mm (inch)	See thermowell	Tube Ø 9 (0.35): • 0 ... 150 (0 ... 5.91) 50 bar • 150 ... 300 (5.91 ... 11.81) 40 bar • Compression fitting 5 bar Tube Ø 12 mm (0.47 inch): • 0 ... 150 (0 ... 5.91) 75 bar • 150 ... 300 (5.91 ... 11.81) 60 bar • Compression fitting 5 bar Compression fitting: PTFE seal, temperature min./max. -20 ... +150 °C (-4 ... +302 °F)	Tube Ø 9 (0.35): • 0 ... 150 (0 ... 5.91) 50 bar • 150 ... 300 (5.91 ... 11.81) 40 bar
Min. response time $t_{0.5}$	See thermowell	20 … 45 s	20 … 34 s
Degree of protection	IP54 ... IP68 depending on connection head, see page 2/18	IP54 ... IP68 depending on connection head, see page 2/18	IP54 ... IP68 depending on connection head, see page 2/18

[1] Load combinations (temperature, flow, vibration, pressure) can at times significantly restrict these values. Further temperature limits result, for example, from thermowell materials with lower thresholds (e.g. 1.4571 pressure resilient, 450 .... 550 °C (842 ... 1022 °F), limit temperature 800 °C (1472 °F)).

© Siemens 2020

Type	TS500 Type 2G	TS500 Type 2F	TS500 Type 3
Description	Temperature sensors for the process industry (pipes and vessels)	Temperature sensors for the process industry (pipes and vessels)	Temperature sensors for the process industry (pipes and vessels) **Faster response than Form 2**
Application	Tubular thermowell for low to medium stress	Tubular thermowell for low to medium stress	Tubular thermowell for low to medium stress
Version	Thermowell according to DIN 43772, type 2G, screwed design	Thermowell according to DIN 43722, type 2F with flange	Thermowell according to DIN 43722, type 3 without process connection, improved response time
Type	With extension	With extension	• Without extension, plug-in • Use with moveable compression fittings
Image			
Catalog page	2/65	2/70	2/75
Article No.	7MC751*-1*(A/B)**-1***	7MC751*-2*(A/B)**-1***	7MC751*-0*K**-0***
Material, in contact with media	1.4404 or 1.4435; 1.4571 (316L; 316TI)	1.4404 or 1.4435; 1.4571 (316L; 316TI)	1.4404 or 1.4435; 1.4571 (316L; 316TI)
Thermowell forms	Form 2G	Form 2F	Form 3
Process connections	Screw-in thread welded on: • G 1 • G ½ • ½ NPT	Welded flange • DN 25, PN10 ... 40 • 1RF150 • 1.5RF150 • 1.5RF300	Compression fittings • G ½ • ½ NPT For welding
Installation length	• 160 mm (6.30 inch) • 250 mm (9.84 inch) • 400 mm (15.75 inch)	• 225 mm (8.86 inch) • 315 mm (12.40 inch) • 465 mm (18.31 inch)	• 225 mm (8.86 inch) • 315 mm (12.40 inch) • 465 mm (18.31 inch)
Neck tube length	According to DIN 43772	According to DIN 43772	According to DIN 43772
Sensor elements	Pt100 + thermocouples	Pt100 + thermocouples	Pt100 + thermocouples
Sensor connection	• 1x4 wire • 2x3 wire	• 1x4 wire • 2x3 wire	• 1x4 wire • 2x3 wire
Sensor accuracy	• Class AA • Class A • Class B • Class 1 • Class 2	• Class AA • Class A • Class B • Class 1 • Class 2	• Class AA • Class A • Class B • Class 1 • Class 2
Connection heads	Type B (Type A pressure resistant)	Type B (Type A pressure resistant)	Type B (Type A pressure resistant)
Explosion protection (EU, CN, EAC, AU, NZ, US, CA)	• Intrinsic safety "i"/"IS" • Flameproof enclosure "d"/"XP" • Non-sparking "ec"/"nA"/"NI"	• Intrinsic safety "i"/"IS" • Flameproof enclosure "d"/"XP" • Non-sparking "ec"/"nA"/"NI"	• Intrinsic safety "i"/"IS" • Flameproof enclosure "d"/"XP" • Non-sparking "ec"/"nA"/"NI"
Output signal	Sensor signal: • 4 ... 20 mA (TH100/TH200) • HART (TH300) • PA (TH400) • FF (TH400)	Sensor signal: • 4 ... 20 mA (TH100/TH200) • HART (TH300) • PA (TH400) • FF (TH400)	Sensor signal: • 4 ... 20 mA (TH100/TH200) • HART (TH300) • PA (TH400) • FF (TH400)
Application	Pipes and vessels	Pipes and vessels	Pipes and vessels
Limit temperatures[1]	• Pt100 basic: -50 ... +400 °C (-58 ... +752 °F) • Pt100 expanded measuring range: -196 ... +600 °C (-321 ... +1112 °F) • Thermocouple: -40 ... +1100 °C (-40 ... +2012 °F) (type-dependent)	• Pt100 basic: -50 ... +400 °C (-58 ... +752 °F) • Pt100 expanded measuring range: -196 ... +600 °C (-321 ... +1112 °F) • Thermocouple: -40 ... +1100 °C (-40 ... +2012 °F) (type-dependent)	• Pt100 basic: -50 ... +400 °C (-58 ... +752 °F) • Pt100 expanded measuring range: -196 ... +600 °C (-321 ... +1112 °F) • Thermocouple: -40 ... +1100 °C (-40 ... +2012 °F) (type-dependent)
Max. nominal pressure[1] **(static pressure at 20°C)** dimensions in mm (inch)	Tube Ø 9 (0.35): • 0 ... 150 (0 ... 5.91) 50 bar • 150 ... 300 (5.91 ... 11.81) 40 bar • Compression fitting 5 bar Tube Ø 12 (0.47): • 0 ... 150 (0 ... 5.91) 75 bar • 150 ... 300 (5.91 ... 11.81) 60 bar	Tube Ø 9 (0.35): • 0 ... 150 (0 ... 5.91) 50 bar • 150 ... 300 (5.91 ... 11.81) 40 bar Tube Ø 12 (0.47): • 0 ... 150 (0 ... 5.91) 75 bar • 150 ... 300 (5.91 ... 11.81) 60 bar Note limit by PN of flange	Tube Ø 12 (0.47): • 0 ... 200 (0 ... 7.87) 75 bar • 200 ... 300 (7.87 ... 11.81) 60 bar • Compression fitting 5 bar 5 bar Compression fitting: PTFE seal, temperature min./max. -20 ... +150 °C (-4 ... +302 °F)
Min. response time $t_{0.5}$	20 … 34 s	20 … 34 s	7 … 15 s
Degree of protection	IP54 ... IP68 depending on connection head, see page 2/18	IP54 ... IP68 depending on connection head, see page 2/18	IP54 ... IP68 depending on connection head, see page 2/18

[1] Load combinations (temperature, flow, vibration, pressure) can at times significantly restrict these values. Further temperature limits result, for example, from thermowell materials with lower thresholds (e.g. 1.4571 pressure resilient, 450 .... 550 °C (842 ... 1022 °F), limit temperature 800 °C (1472 °F)).

© Siemens 2020

Detailed product overview

Type	TS500 Type 3G	TS500 Type 3F	TS500 Type 4/4F
Description	Temperature sensors for the process industry (pipes and vessels) **Faster response than Form 2**	Temperature sensors for the process industry (pipes and vessels) **Faster response than Form 2**	Temperature sensors for the process industry (pipes and vessels) **Fast-response version available**
Application	Tubular thermowell for low to medium stress	Tubular thermowell for low to medium stress	Barstock thermow. for medium to extreme stress
Version	Thermowell according to DIN 43772, type 3G, screwed design	Thermowell according to DIN 43772, type 3F with flange	Thermowell according to DIN 43772: • Type 4 for welding • Type 4F with flange
Type	With extension	With extension	With extension
Image		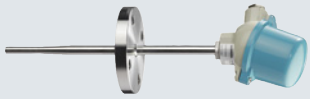	
Catalog page	2/80	2/85	2/90
Article No.	7MC751*-1*K**-1***	7MC751*-2*K**-1***	7MC752*
Material, in contact with media	1.4404 or 1.4435; 1.4571 (316L; 316TI)	1.4404 or 1.4435; 1.4571 (316L; 316TI)	Form 4F: 1.4404 or 1.4435; 1.4571 (316L; 316TI) Form 4 additionally: 1.7335; 1.5415 (A 182 F11; A 204 Size A)
Thermowell forms	Form 3G	Form 3F	• Form 4 • Form 4F
Process connections	Screw-in thread welded on: • G 1 • G ½ • ½ NPT	Welded flange • DN 25, PN10 ... 40 • 1RF150 • 1.5RF150 • 1.5RF300	Form 4 for welding, Form 4F with flange: • DN 25, PN10 ... 40 • 1RF150 • 1RF300 • 1.5RF150 • 1.5RF300
Installation length	• 160 mm (6.30 inch) • 220 mm (8.66 inch) • 280 mm (11.02 inch)	• 225 mm (8.86 inch) • 285 mm (11.22 inch) • 345 mm (13.58 inch)	Form 4F: as per customer specification Form 4: • 110 mm (4.33 inch) quick • 140 mm (5.51 inch) quick/normal • 200 mm (7.87 inch) quick/normal • 260 mm (10.23 inch) normal
Neck tube length	According to DIN 43772	According to DIN 43772	According to DIN 43772
Sensor elements	Pt100 + thermocouples	Pt100 + thermocouples	Pt100 + thermocouples
Sensor connection	• 1x4 wire • 2x3 wire	• 1x4 wire • 2x3 wire	• 1x4 wire • 2x3 wire
Sensor accuracy	• Class AA • Class A • Class B • Class 1 • Class 2	• Class AA • Class A • Class B • Class 1 • Class 2	• Class AA • Class A • Class B • Class 1 • Class 2
Connection heads	Type B (Type A pressure resistant)	Type B (Type A pressure resistant)	Type B (Type A pressure resistant)
Explosion protection (EU, CN, EAC, AU, NZ, US, CA)	• Intrinsic safety "i"/"IS" • Flameproof enclosure "d"/"XP" • Dust protection by enclosure "t"/"DIP" • Non-sparking "ec"/"nA"/"NI"	• Intrinsic safety "i"/"IS" • Flameproof enclosure "d"/"XP" • Non-sparking "ec"/"nA"/"NI"	• Intrinsic safety "i"/"IS" • Flameproof enclosure "d"/"XP" • Non-sparking "ec"/"nA"/"NI"
Output signal	Sensor signal: • 4 ... 20 mA (TH100/TH200) • HART (TH300) • PA (TH400) • FF (TH400)	Sensor signal: • 4 ... 20 mA (TH100/TH200) • HART (TH300) • PA (TH400) • FF (TH400)	Sensor signal: • 4 ... 20 mA (TH100/TH200) • HART (TH300) • PA (TH400) • FF (TH400)
Application	Pipes and vessels	Pipes and vessels	Pipes and vessels
Limit temperatures[1]	• Pt100 basic: -50 ... +400 °C (-58 ... +752 °F) • Pt100 expanded measuring range: -196 ... +600 °C (-321 ... +1112 °F) • Thermocouple: -40 ... +1100 °C (-40 ... +2012 °F) (type-dependent)	• Pt100 basic: -50 ... +400 °C (-58 ... +752 °F) • Pt100 expanded measuring range: -196 ... +600 °C (-321 ... +1112 °F) • Thermocouple: -40 ... +1100 °C (-40 ... +2012 °F) (type-dependent)	• Pt100 basic: -50 ... +400 °C (-58 ... +752 °F) • Pt100 expanded measuring range: -196 ... +600 °C (-321 ... +1112 °F) • Thermocouple: -40 ... +1100 °C (-40 ... +2012 °F) (type-dependent)
Max. nominal pressure[1] **(static pressure at 20°C)** dimensions in mm (inch)	Tube Ø 12 (0.47): • 0 ... 200 (0 … 7.87) 75 bar • 200 ... 300 (7.87 … 11.81) 60 bar	Tube Ø 12 (0.47): • 0 ... 200 (0 … 7.87) 75 bar • 200 ... 300 (7.87 … 11.81) 60 bar Note restriction imposed by PN of the flange	Mat. (1.4404; 1.4571): • 65 (2.56) 450 bar • 125 (4.92) 350 bar Mat. (1.7335; 1.5415): • 65 (2.56) 500 bar • 125 (4.92) 400 bar Form 4F: Note restriction imposed by PN of the flange
Min. response time $t_{0.5}$	7 … 15 s	7 … 15 s	Ø 24 mm (0.95 inch): 20 … 45 s
Degree of protection	IP54 ... IP68 depending on connection head, see page 2/18	IP54 ... IP68 depending on connection head, see page 2/18	IP54 ... IP68 depending on connection head, see page 2/18

[1] Load combinations (temperature, flow, vibration, pressure) can at times significantly restrict these values. Further temperature limits result, for example, from thermowell materials with lower thresholds (e.g. 1.4571 pressure resilient, 450 .... 550 °C (842 ... 1022 °F), limit temperature 800 °C (1472 °F)).

© Siemens 2020

Type	TS Thermowell 7MT14...	TS Thermowell 7MT2..	TS Thermowell 7MT3..	TS Thermowell 7MT4..	TS Thermowell 7MT5..
Description	Thermowells for the process industry				
Application	Barstock thermowell for medium to extreme stress				
Version	Thermowell according to DIN 43772	Thermowell according to ASME B40.9			
Type	With flange connection or for welding in	Screwed design	For welding	With flange connection	Van Stone version
Image					
Catalog page	2/104	2/107	2/107	2/108	2/108
Article No.	7MT14	7MT21 (straight) 7MT22 (reduced) 7MT23 (tapered)	7MT31 (straight) 7MT32 (reduced) 7MT33 (tapered)	7MT41 (straight) 7MT42 (reduced) 7MT43 (tapered)	7MT51 (straight) 7MT52 (reduced) 7MT53 (tapered)
Material, in contact with media	• 316Ti/1.4571 • 316L/1.4404 • Hastelloy C276/2.4819 • 1.5415 Heat-resistant • 1.7335 Heat-resistant • PTFE coating (thermowell made of 316/TI/L) • ECTFE (HALAR) (thermowell made of 316/TI/L) • Stellite coating (thermowell made of 316/TI/L)	• 316L/1.4404 • Carbon steel • 304L/1.4306 • 321/1.4541	• 316L/1.4404 • Carbon steel • 304L/1.4306 • 321/1.4541	• 316L/1.4404 • Carbon steel • Hastelloy C276/2.4819 • Hastelloy C22/2.4602 • 304L/1.4306 • 321/1.4541 • Monel alloy 400/2.4360 • Tantalum (barrel, thermowell made of 316/TI/L) • Duplex/1.4462 • Super duplex • PTFE coating (thermowell made of 316/TI/L • ECTFE (HALAR) (thermowell made of 316/TI/L) • Stellite coating (thermowell made of 316/TI/L)	• 316L/1.4404 • Hastelloy C276/2.4819 • Hastelloy C22/2.4602 • 304L/1.4306 • 321/1.4541 • Monel alloy 400/2.4360 • Duplex/1.4462 • Super duplex • Tantalum coating on 316 • PTFE coating (thermowell made of 316/TI/L) • ECTFE (HALAR) (thermowell made of 316/TI/L) • Stellite coating (thermowell made of 316/TI/L)
Thermowell forms	Straight/tapered	Straight Reduced (staggered) Tapered			
Process connections	• Without (for direct welding) • Flange connection • EN 1092-1: DN 40, 50/PN 10-16, 25-40 • ASME B16.5: 1.5" 2"/Class 150, 300, 600	• M20x1.5 • M27x2.0 • M33x2.0 • ½-14 NPT • ¾ NPT • 1 NPT • G½ • G¾ • G1 • R½ • R¾ • R1	• 26.7 mm • 33.4 mm • 48.3 mm	• EN 1092-1: DN 25, 40, 50/PN 10-16, 25-40 • ASME B16.5: 1", 1.5", 2", 3", 4"/ Class 150, 300, 600	• 33.4 mm/51 mm • 48.3 mm/73 mm • 60.3 mm/92 mm + collar flanges ASME B16.5: 1", 1.5", 2"/ Class 150, 300, 600
Installation length	Standard lengths and free configuration				
Extension length	Standard lengths and free configuration				
Explosion protection	Not Ex-relevant, but offers zone separation when wall thickness of 1 mm for anti-corrosive materials, or otherwise 3 mm is observed. Not for coated versions.				
Application	Pipes and vessels				
Limit temperatures	Material-dependent				
Max. static pressure	Material-dependent				
Min. response time	20 s … several minutes				
Degree of protection	When installed correctly, IP68 is achieved between extension and thermowell				

© Siemens 2020

More information

Ordering examples for SITRANS TS100/200

Required properties	Ordering data
SITRANS TS100	**7MC7111**
Sensor diameter	**6**
Standard length 200 mm (sensor length range 101 ... 250 mm)	**C**
Sensor	**A1**
Flying leads	**1**
Enclosed clamp connection	**A41**
PVC cable, 10 m	**J10**
TAG plate	**Y15: TTSA5458**
Non-Ex requirements	**-Z E00**

Complete article number

7MC7111-6CA11-Z A41+J10+Y15
Y15: TTSA5458

Required properties	Ordering data
SITRANS TS100	**7MC7111**
Sensor diameter	**6**
Standard length 200 mm (sensor length range 101 ... 250 mm)	**C**
Sensor	**A1**
Flying leads	**1**
Enclosed clamp connection	**A41**
PVC cable, 10 m	**J10**
TAG plate	**Y15: TTSA5458**
Customer-specific length 211 mm	**Y44: 211 mm**
Non-Ex requirements	**-Z E00**

Complete article number

7MC7111-6CA11-Z A41+J10+Y15+Y44
Y15: TTSA5458
Y44: 211 mm

Ordering examples for SITRANS TS500

Required properties	Ordering data
SITRANS TS500	**7MC751**
Material	**1**
Process connection	**1E**
Thermowell form	**A**
Installation length U standard 250 mm (installation length customer specific 220 mm)	**12**
Extension X customer-specific	**9**
Header	**C**
Sensor	**A**
Number/precision of sensors	**1**
Extension X customer-specific	**N2D**
Installation length U customer-specific	**Y44: 220 mm**
Extension length X customer-specific	**Y45: 200 mm**
3-point factory calibration	**Y33: 0° C** **Y33: 50 °C** **Y33: 150 °C**
Non-Ex requirements	**-Z E00**

Complete article number

7MC7511-1EA12-9CA1-Z N2D+Y44+Y45 +Y33+Y33+Y33
Y44: 220 mm
Y45: 200 mm
Y33: 0 °C
Y33: 50 °C
Y33: 150 °C

© Siemens 2020

Dimensional drawings

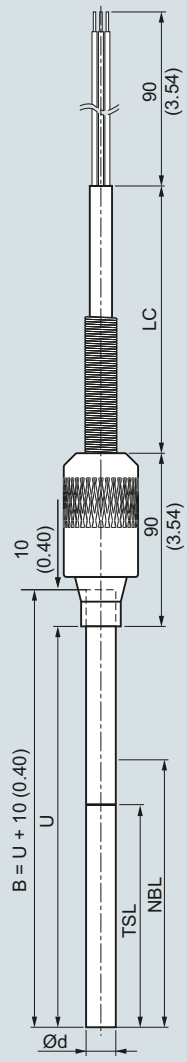

B	Measuring insert length
Ød	Measuring insert outer diameter (6 (0.24))
LC	Cable length
NBL	Non-bending length
TSL	Temperature-sensitive length
U	Insertion length

SITRANS TS100, temperature sensors in cable version, universal use, mineral-insulated version, for unfavorable space conditions, IP54 at sensor/cable transition, dimensions in mm (inch)

Design of connection side

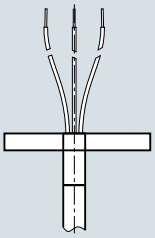

Flying leads, IP00, dimensions in mm (inch)

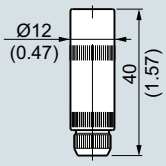

Coupling LEMO 1S, IP50, dimensions in mm (inch)

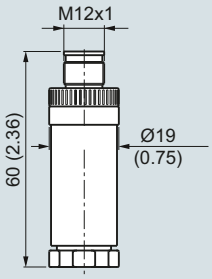

M12 device plug, IP54, dimensions in +mm (inch)

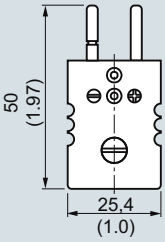

Thermocouple plug, IP20, dimensions in mm (inch)

© Siemens 2020

Cable version, mineral-insulated

Selection and Ordering data	Article No.
SITRANS TS100 ↗ **Temperature sensors in cable version, universal use, mineral-insulated version, for unfavorable space conditions**	**7MC7111-** ■■■■■
↗ Click on the Article No. for the online configuration in the PIA Life Cycle Portal.	
Sensor diameter	
6 mm (0.24 inch)	**6**
Length of sensor element B, effective length U = B-10; see dimensional drawings page 2/41	
200 mm (7.87 inch)	**C**
500 mm (19.68 inch)	**D**
750 mm (29.53 inch)	**E**
Customer-specific length of sensor element B, effective length U = B-10; see dimensional drawings page 2/41	
enter customer specific length with Y44, see Order codes below	
70 ... 100 mm (2.76 ... 3.94 inch) Initial: 100 mm (3.94 inch)	**B**
101 ... 250 mm (3.98 ... 9.84 inch) Initial: 200 mm (7.87 inch)	**C**
251 ... 500 mm (9.88 ... 19.68 inch) Initial: 500 mm (19.68 inch)	**D**
501 ... 750 mm (19.72 ... 29.53 inch) Initial: 750 mm (29.53 inch)	**E**
751 ... 1 000 mm (19.72 ... 39.37 inch) Initial: 1 000 mm (39.37 inch)	**F**
1 001 ... 1500 mm (39.4 ... 59.00 inch) Initial: 1 500 mm (59.00 inch)	**G**
Special length: < 70 mm (2.76 inch) or > 1500 mm (59.00 inch)	**X**
Sensor[1] Please note: The accuracy class range can be lower than the measuring range. For more information, see page 2/21	
Pt100, basis, -50 ... +400 °C (-58 ... +752 °F)	**A**
Pt100, vibration-resitant, -50 ... +400 °C (-58 ... +752 °F)	**B**
Pt100, expanded range, -196 ... +600 °C (-320.8 ... +1 112 °F)	**C**
Thermocouple Type K, -40 ... +1 000 °C (-40 .... +1 832 °F)	**K**
Thermocouple Type J, -40 ... +750 °C (-40 ... +1 382 °F)	**J**
Sensor number/Accuracy Pt 100 connection: 1 x 4-wire connection or 2 x 3-wire connection, see "Measuring technology: connection types", page 2/23	
Single, basic accuracy (Class 2/Class B)	**1**
Single, increased accuracy (Class 1/Class A)	**2**
Single, highest accuracy (Class AA)	**3**
Double, basic accuracy (Class 2/Class B)	**4**
Double, increased accuracy (Class 1/Class A)	**5**
Double, highest accuracy (Class AA)	**6**
Design of connection side	
Flying leads	**1**
LEMO coupling 1S	**2**
M12 device plug, not for double Pt100	**3**
Thermocouple coupling, from TC-material (2xTC on request)	**4**

Selection and Ordering data	Order code
Further designs	
Add "**-Z**" to Article No. and specify Order code.	
Customer-specific length of sensor element B, effective length U = B-10 Select range, enter desired length in plain text (No entry = standard length)	**Y44**
Options	
Add "**-Z**" to Article No., add options, separate extensions with "+".	
Connection cable, type and length Cable type = 1st letter, Length 1 ... 99 m (3.28 ... 324.80 ft) = 2nd + 3rd place e.g.: 34 m (111.55 ft) connection cable PVC (PVC code is J34)	
with X meters connection cable (JJ) PVC/PVC, Operating temperature (-10...+105°C) (14 ... 221 °F)	**J01 ... J99**
with X meters connection cable (SLFP) Silicone/Fluorpolymer, operating temperature -50 ... +180 °C (-58 ... +356 °F)	**S01 ... S99**
with X meters connection cable (TGLV) PTFE/glass fiber/reinforced with stainless steel), Operating temperature (-100...+205°C (148 ... 401°F))	**L01 ... L99**

[1] Pt1000 versions are also available. To find these, please switch to Online Configuration in the PIA Life Cycle Portal: www.siemens.com/pia-portal

Additional configurations on page after next page!

You find ordering examples on page 2/40.

© Siemens 2020

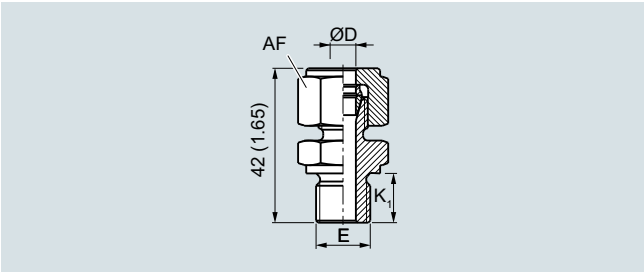

Compression fitting, metric (A30, A31), dimensions in mm (inch)

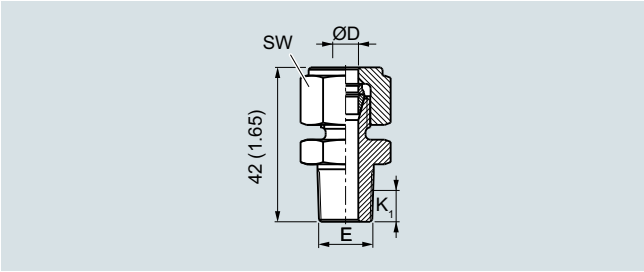

Compression fitting NPT (A32), dimensions in mm (inch)

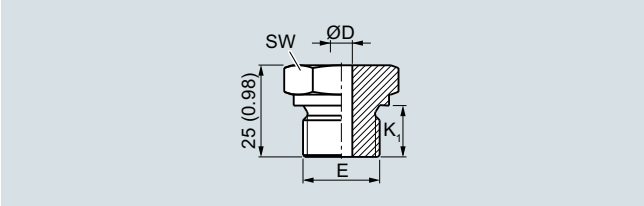

Soldering nipple, metric (A20, A21, A23), dimensions in mm (inch)

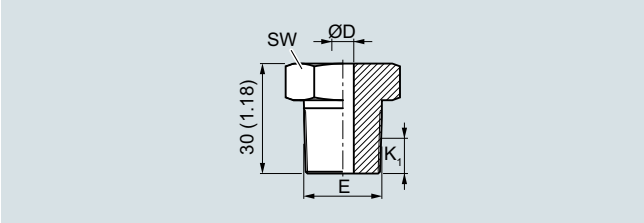

Soldering nipple NPT (A22), dimensions in mm (inch)

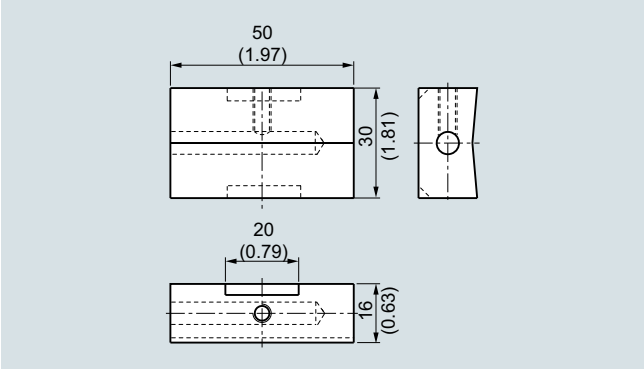

Surface connection piece (A50), dimensions in mm (inch)

Selection and Ordering data	Order code
Options	
Add "**-Z**" to Article No., add options, separate extensions with "+".	
Process connection	
Soldering nipple G¼", enclosed	**A20**
Soldering nipple G½", enclosed	**A21**
Soldering nipple NPT½", enclosed	**A22**
Soldering nipple M18x1.5, enclosed	**A23**
Compression fitting G¼", enclosed	**A30**
Compression fitting G½", enclosed	**A31**
Compression fitting NPT ½", enclosed	**A32**
Surface connection piece, aluminum, enclosed (non Ex)	**A50**
Explosion protection	
Without explosion protection requirements (Europe, Australia, New Zealand)	**E00**
Intrinsic safety "i"/"IS1) according to ATEX and IECEx (Europe, Australia, New Zealand)	**E01**
Without explosion protection requirements (USA, Canada), Basis CSA	**E17**
Intrinsic safety "i"/"IS"[1] according to cCSAus (USA, Canada)	**E18**
Without explosion protection requirements (China)	**E54**
Intrinsic safety "i"/"IS"[1] according to NEPSI (China)	**E55**
Without explosion protection requirements (EAC)	**E80**
Intrinsic safety "i"/"IS"[1] according to EACEx (EAC)	**E81**
Marine approvals	
Det Norske Veritas Germanischer Lloyd (DNV GL)	**D01**
Certificates and approvals	
EN 10204-3.1 Inspection certificate for materials coming into contact with media	**C12**
EN 10204-3.1 Inspection certificate visual: measurement and functional inspection	**C34**
EN 10204-2.1: Declaration of compliance with the order	**C35**
ISO 9001 grease-free (cleaned for e.g. oxygen applications)	**C51**
Further options	
Stainless steel TAG plate , Enter lettering in plain text	**Y15**
Plant calibration per 1 point, enter temperature in plain text, Attention: For devices with built-in head transmitters, select test points within the set measurement range	**Y33**
Option not found?	
Handling number special version	**Y99**

[1] Please select Ex i version of the optional transmitter.

You find ordering examples on page 2/40.

© Siemens 2020

Dimensional drawings

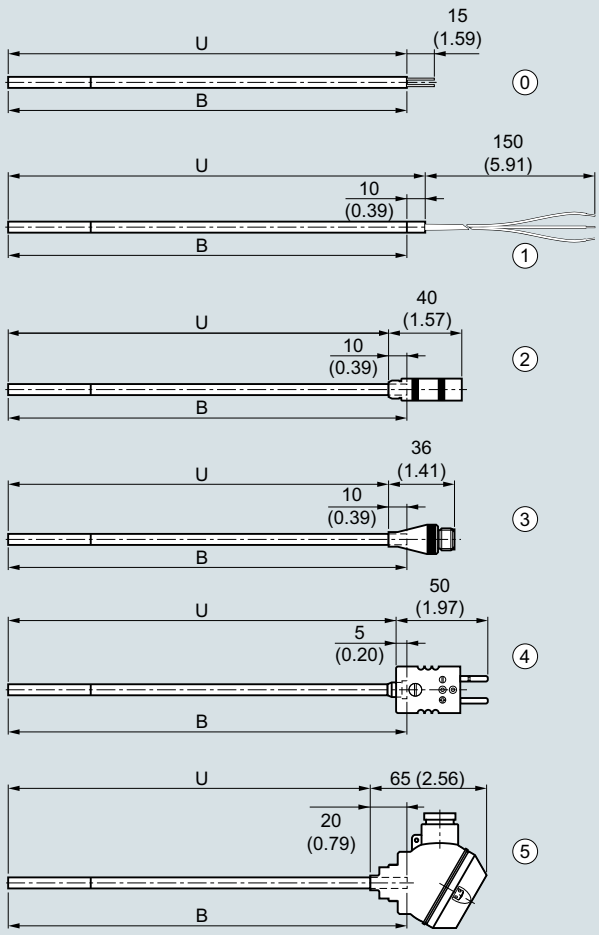

B Measuring insert length
H Head height
U Insertion length

			IP level sensor	IP level terminals
0	Basic sensor	**U = B**	IP65	IP00
1	Flying leads	**U = B + 10 (0.39)**	IP65	IP00
2	LEMO coupling 1S	**U = B - 10 (0.39)**	IP65	IP50
3	M12 device plugs	U = B - 10 (0.39)	IP65	IP54
4	Thermocouple coupling	**U = B - 5 (0.20)**	IP65	IP20
5	Mini connection head	U = B - 20 (0.79)	IP65	IP65

SITRANS TS200, temperature sensors in cable design, for universal use, mineral-insulated version, for unfavorable space conditions, dimensions in mm (inch)

© Siemens 2020

Selection and Ordering data	Article No.
SITRANS TS200 ↗ **Temperature sensors in compact version, universal use, mineral-insulated version, for unfavorable space conditions**	**7MC7212-** ■■■■■
↗ Click on the Article No. for the online configuration in the PIA Life Cycle Portal.	
Sensor diameter	
6 mm (0.24 inch)	6
Length of sensor element B, effective length U see dimensional drawing on page 2/44	
200 mm (7.87 inch)	C
500 mm (19.68 inch)	D
750 mm (29.53 inch)	E
Customer-specific length of sensor element B, effective length U see dimensional drawing on page 2/44 enter customer specific length with Y44, see Order codes below	
70 ...100 mm (2.76 ... 3.94 inch) Initial: 100 mm (3.94 inch)	B
101 ... 250 mm (3.98 ... 9.84 inch) Initial: 200 mm (7.87 inch)	C
251 ... 500 mm (9.88 ... 19.68 inch) Initial: 500 mm (19.68 inch)	D
501 ... 750 mm (19.72 ... 29.53 inch) Initial: 750 mm (29.53 inch)	E
751 ... 1 000 mm (29.57 ... 39.37 inch) Initial: 1 000 mm (39.37 inch)	F
1 001 ... 1 500 mm (39.4 ... 59.00 inch) Initial: 1 500 mm (59.00 inch)	G
Special length: < 70 mm (2.76 inch) or > 1500 mm (59.00 inch)	X
Sensor[1] Please note: The accuracy class range can be lower than the measuring range. For more information, see page 2/21	
Pt100, basis, -50 ... +400 °C (-58 ... +752 °F)	A
Pt100, vibration-resistant, -50 ... +400 °C (-58 ... +752 °F)	B
Pt100, expanded range, -196 ... +600 °C (-320.8 ... +1 112 °F)	C
Thermocouple Type K, -40 ... +1 000 °C (-40 ... +1 832 °F)	K
Thermocouple Type J, -40 ... +750 °C (-40 ... +1 382 °F)	J
Number/Accuracy Pt 100 connection: 1 x 4-wire connection or 2 x 3-wire connection, see "Measuring technology: connection types", page 2/23	
Single, basic accuracy (Class 2/Class B)	1
Single, increased accuracy (Class 1/Class A)	2
Single, highest accuracy (Class AA)	3
Double, basic accuracy (Class 2/Class B)	4
Double, increased accuracy (Class 1/Class A)	5
Double, highest accuracy (Class AA)	6
Design of connection side	
Solid wire ends (sensor element)	0
Flying leads	1
LEMO coupling 1S	2
M12 device plug, not for double Pt100	3
Thermocouple coupling, from TC-material (2xTC on request)	4
Mini connection head, aluminum, not for double Pt100	5

Selection and Ordering data	Order code
Further designs	
Add "**-Z**" to Article No. and specify Order code.	
Customer-specific length of sensor element B, effective length, U see dimensional drawing on page 2/44 Select range, enter desired length in plain text (No entry = standard length)	Y44

[1] Pt1000 versions are also available. To find these, please switch to Online Configuration in the PIA Life Cycle Portal: www.siemens.com/pia-portal

Additional configurations on page after next page!

You find ordering examples on page 2/40.

© Siemens 2020

Compact version, mineral-insulated

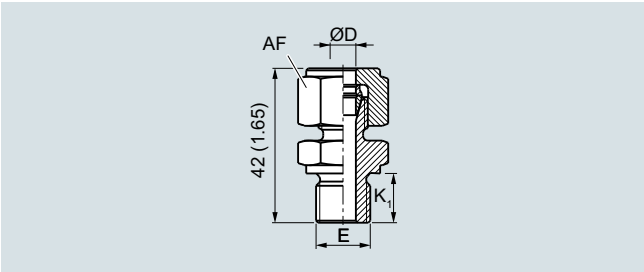

Compression fitting, metric (A30, A31), dimensions in mm (inch)

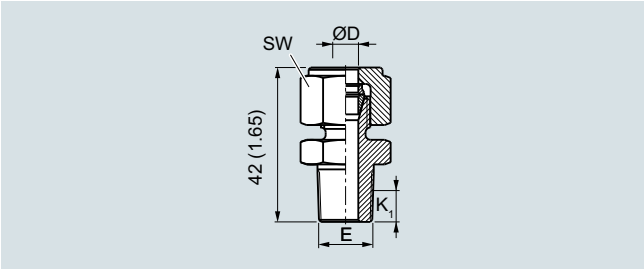

Compression fitting NPT (A32), dimensions in mm (inch)

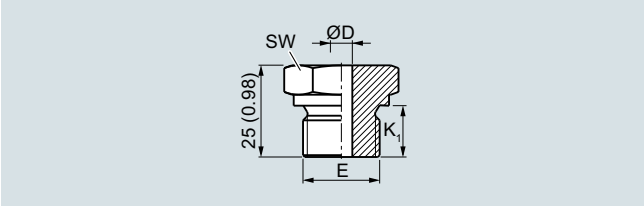

Soldering nipple, metric (A20, A21, A23), dimensions in mm (inch)

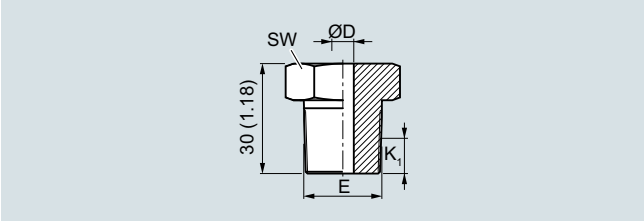

Soldering nipple NPT (A22), dimensions in mm (inch)

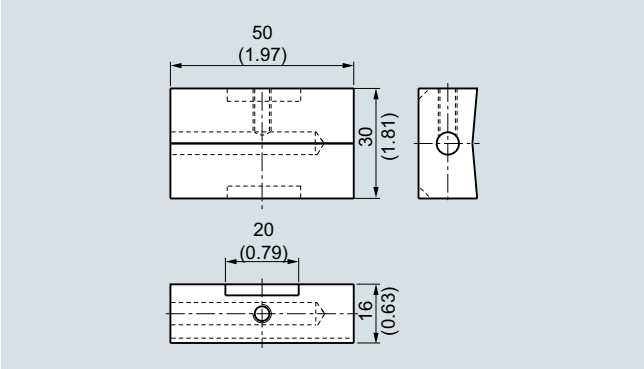

Surface connection piece (A50), dimensions in mm (inch)

Selection and Ordering data	Order code
Options	
Add "**-Z**" to Article No., add options, separate extensions with "+".	
Process connection	
Soldering nipple G¼", enclosed	**A20**
Soldering nipple G½", enclosed	**A21**
Soldering nipple NPT½", enclosed	**A22**
Soldering nipple M18x1.5, enclosed	**A23**
Compression fitting G¼", enclosed	**A30**
Compression fitting G½", enclosed	**A31**
Compression fitting NPT½", enclosed	**A32**
Surface connection piece, aluminum, enclosed (non Ex)	**A50**
Explosion protection	
Without explosion protection requirements (Europe, Australia, New Zealand)	**E00**
Intrinsic safety "i"/"IS1) according to ATEX and IECEx (Europe, Australia, New Zealand)	**E01**
Without explosion protection requirements (USA, Canada), Basis CSA	**E17**
Intrinsic safety "i"/"IS"[1] according to cCSAus (USA, Canada)	**E18**
Without explosion protection requirements (China)	**E54**
Intrinsic safety "i"/"IS"[1] according to NEPSI (China)	**E55**
Without explosion protection requirements (EAC)	**E80**
Intrinsic safety "i"/"IS"[1] according to EACEx (EAC)	**E81**
Marine approvals	
Det Norske Veritas Germanischer Lloyd (DNV GL)	**D01**
Certificates and approvals	
EN 10204-3.1 Inspection certificate for materials coming into contact with media	**C12**
EN 10204-3.1 Inspection certificate visual, measurement and functional inspection	**C34**
EN 10204-2.1: Declaration of compliance with the order	**C35**
ISO 9001 grease-free (cleaned for e.g. oxygen applications)	**C51**
Setting, designation, calibration	
Stainless steel TAG plate , Enter lettering in plain text	**Y15**
Plant calibration per 1 point, enter temperature in plain text. Attention: For devices with built-in head transmitters, select test points within the set measurement range	**Y33**
Option not found?	
Handling number special version	**Y99**

[1] Please select Ex i version of the optional transmitter.

You find ordering examples on page 2/40.
Accessories, see page 2/251.

© Siemens 2020

Dimensional drawings

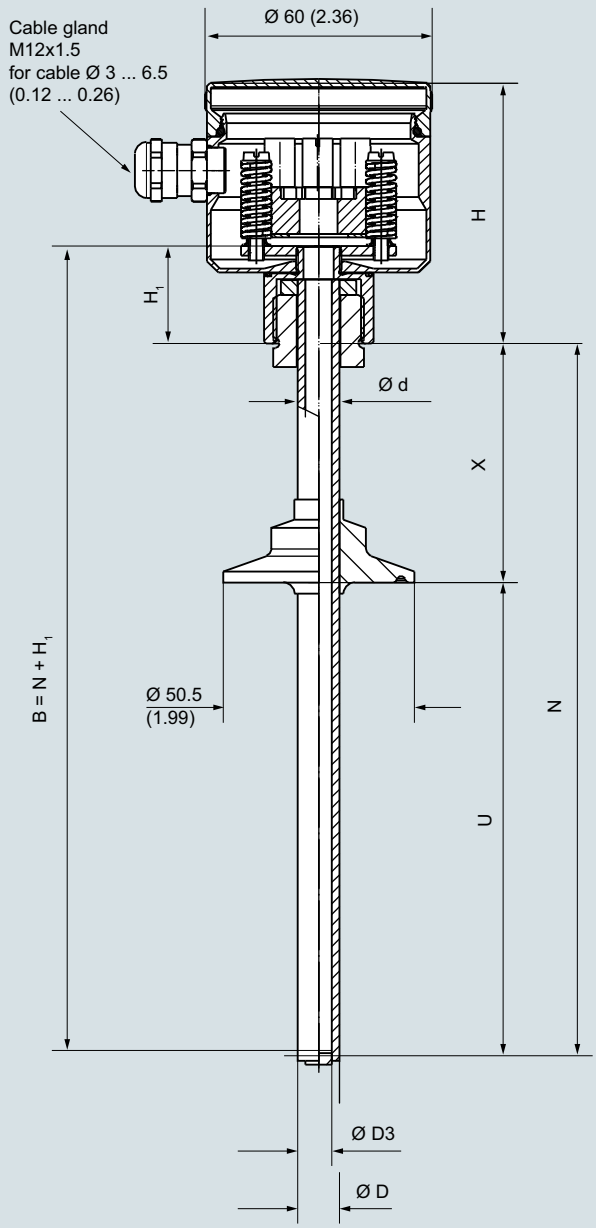

B	Measuring insert length
Ød	Measuring insert outer diameter (6 (0.24))
ØD	Process connection outer diameter
ØD3	Thermowell inner diameter
H	Head height
H_1	Type Axx = 41 (1.61) Type Bxx = 26 (1.02)
N	Nominal length
U	Insertion length
X	Extension length

SITRANS TS300 modular design, dimensions in mm (inch)

© Siemens 2020

Selection and Ordering data

Selection and Ordering data	Article No.	Order code
SITRANS TS300 for food, pharmaceuticals and biotechnology, modular design for installation in pipes and vessels ↗	**7MC8005-** ■■■■0 - ■■■■0	■■■
↗ Click on the Article No. for the online configuration in the PIA Life Cycle Portal.		
Head		
Stainless steel head, BS0, screw cover (Standard version)	5	
Aluminum head, BA0, flange cover standard	1	
Plastic cover, BM0, srew cover	2	
Aluminum head, BB0, hinged cover low	3	
Aluminum head, BC0, hinged cover high	4	
Special version: (add Order code and plain text)	9	H 1 Y
Process connection, material 1.4404 or 1.4435/316L		
Milk pipe union to DIN 11851 with slotted union nut and nominal diameter/pressure		
DN 25/PN 40	A A	
DN 32/PN 40	A B	
DN 40/PN 40	A C	
DN 50/PN 25	A D	
Clamp connection:		
ISO 2852 / DIN 32676 / Tri-Clamp / Outer diameter D		
– / – / ½"/ ¾" / 25.0 mm	C A	
DN 25/ 33.7/38 / DN 25/32/40 / 1", 1½" / 50.5 mm	C B	
DN 40/51 / DN 50 / 2" / 64.0 mm	C C	
DN 63.5 / – / 2½" / 77.5 mm	C D	
DN 88.9 / DN 80 / – / 106.0 mm	C E	
Varivent connection (Tuchenhagen)		
Ø D_6 = 50 mm (1.97 inch), for Varivent housing DN 25 and DN 1"	K U	
Ø D_6 = 68 mm (2.68 inch), for Varivent housing DN 40 ... 125 and 1½" ... 6"	K V	
NEUMO/BioControl		
Size 25	B A	
Size 50	B B	
Size 65	B C	
Ingold flange		
DN 25 with hexagon union nut G 1¼", mounting length 40 mm (1.57"), diameter 24.8 mm (0.98") incl. O-ring	J A	
Welding piece (sphere diameter 30 x 40 mm (1.2 x 1.6 inch) long)	L A	
Special version: Type of screwed gland and nominal diameter (add Order code and plain text)	Z A	J 1 Y
Thermowell / **Measuring insert**		
Ø D = 6 mm (0.24 inch) / Ø 3/3.2 mm, (0.12/0.13 inch) miner. insul.	1	
Ø D =9 mm (0.35 inch) / Ø 6 mm (0.24 inch)	2	
Ø D =9 mm (0.35 inch) / Ø 6 mm (0.24 inch) miner. insul.	3	
Ø D =9 mm (0.35 inch) tapered tip D_2 =5 Ø x 20 mm (0.2 x 0.79 inch) / Ø 3/3.2 mm, (0.12/0.12 inch) miner. insul.	4	
Special version: (add Order code and plain text)	9	L 1 Y

Selection and Ordering data	Article No.	Order code
SITRANS TS300 for food, pharmaceuticals and biotechnology, modular design for installation in pipes and vessels	**7MC8005-** ■■■■0 - ■■■■0	■■■
Neck tube length X		
65 mm (2.56 inch) [M = 80 mm (3.15 inch)]	1	
130 mm (5.12 inch) [M = 145 mm (5.71 inch)]	2	
Special version: (add Order code and plain text)	9	N 1 Y
Insertion length		
Enter customer specific length with Y44, see Order codes below		
15 mm (0.59 inch)	B	
16 ... 35 mm (0.63 ...1.38 inch) Initial: 35 mm (1.38 inch)	C	
36 ... 50 mm (1.42 ... 1.97 inch) Initial: 50 mm (1.97 inch)	D	
51 ... 100 mm (2.01 ... 3.94 inch) Initial: 100 mm (3.94 inch)	E	
101 ... 160 mm (3.98 ... 6.30 inch) Initial: 160 mm (6.30 inch)	F	
161 ... 250 mm (6.34 ... 9.84 inch) Initial: 250 mm (9.84 inch)	G	
251 ... 400 mm (9.88 ... 15.75 inch) Initial: 400 mm (15.75 inch)	H	
1 ... 4 inch, Initial: 4 inch	J	
4 ... 6 inch, Initial: 6 inch	K	
6 ... 9 inch, Initial: 9 inch	L	
Special version: (add Order code and plain text)	Z	P 1 Y
Sensor		
Thin-film technology: measuring range -50 ... +400 °C (-58 ... +752 °F)		
2 x Pt100, class A, three-wire	G	
1 x Pt100, class A, four-wire	H	
Special version: (add Order code and plain text)	Z	Q 1 Y

Further designs Add "**-Z**" to Article No. and add Order code	Order code
Process connection completely electropolished	P01
Hygiene version (R_a < 0.8 µm (3.1 x 10^{-5} inch))	H01
Certificates	
• Roughness depth measurement R_a certified by factory certificate to EN 10204-3.1	C18
• Material certificate to EN 10204-3.1	C12
TAG plate made of stainless steel specify TAG No. in plain text	Y15
Test report (at 0, 50 and 100%) specify measuring range in plain text If optional head transmitters are integrated, please note that all calibration points are located in the set measuring range. If the points are located outside the standard measuring range, a Y01 addition is always required.	Y33
Insertion length customer-specific Select range, enter desired length in plain text (No entry = standard length)	Y44

© Siemens 2020

Dimensional drawings

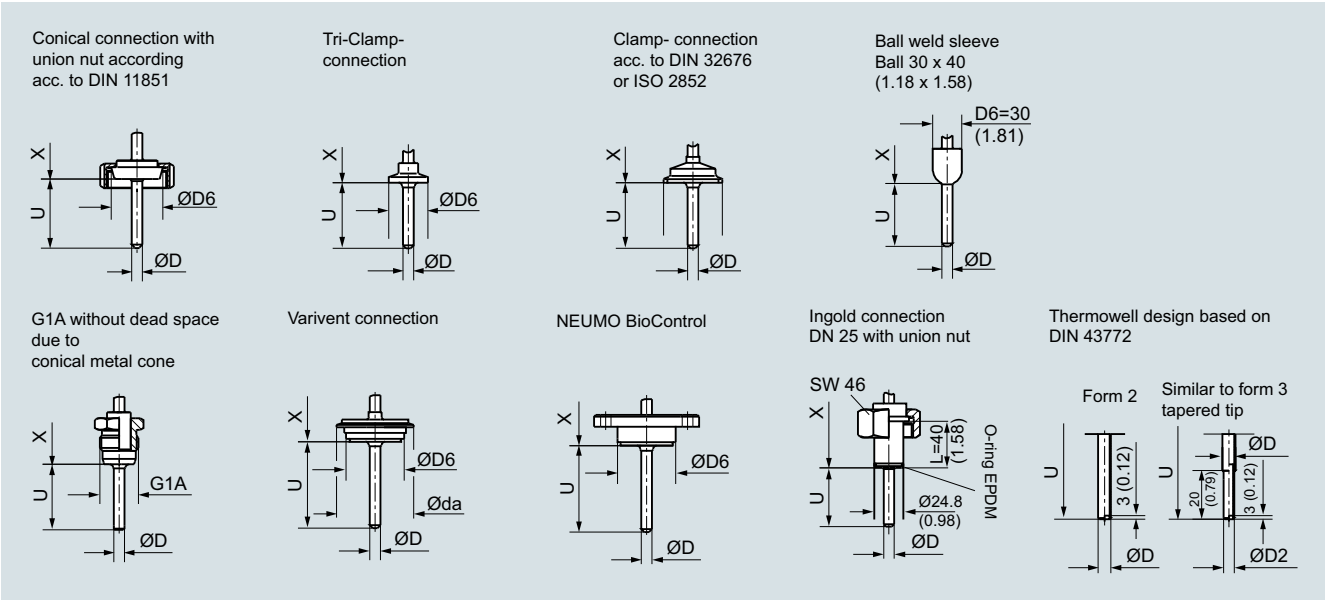

Process connections, dimensions in mm (inch)

© Siemens 2020

Selection and Ordering data	Order code
Further designs	
Add "**-Z**" to Article No. and specify Order code.	
Explosion protection	
Manufacturers declaration for intrinsically safe circuits	**E01**
Built-in head transmitter Measuring range to be set must be specified with plain text data "Y11".	
SITRANS TH100, input 1 x Pt100, 4 ... 20 mA	**T12**
SITRANS TH320, input 1 x universal, 4 ... 20 mA	**T24**
SITRANS TH320, input 1 x universal, HART	**T34**
SITRANS TH420, input 2 x universal, HART	**T35**
SITRANS TH400, input 1 x universal, PA	**T40**
SITRANS TH400, input 1 x universal, PA, Ex	**T41**
SITRANS TH400, input 1 x universal, FF	**T45**
SITRANS TH400, input 1 x universal, FF, Ex	**T46**
Transmitter options	
Transmitter, enter complete setting in plain text (Y11:+/-NNNN ... +/-NNNN C,F)	**Y11**
Enter measuring point (max. 8 characters) in plain text	**Y17**
Transmitter, enter measuring point description (max. 16 characters) in plain text	**Y23**
Transmitter, enter measuring point text (max. 32 characters) in plain text	**Y24**
Transmitter, enter bus address in plain text	**Y25**
Transmitter, fail-safe value 3.6 mA (instead of 22.8 mA)	**U36**
SITRANS TH320/420 transmitter with SIL2/3 certificate	**C20**
Transmitter test protocol (5 points)	**C11**
Further options	
Connection form, flying leads (for the direct transmitter assembly, delivery without screws and springs)	**G01**
M12 device plug (in combination with transmitter, Non-Ex)	**G12**
Option not found?	
Specify special version in plain text	**Y98**
Process number for the special version	**Y99**

Accessories, see page 2/251.

© Siemens 2020

Dimensional drawings

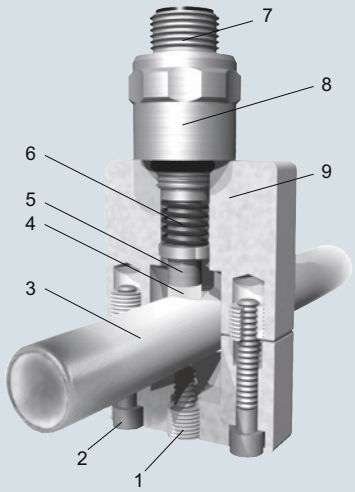

1 Vibration-locking-screw
2 Mounting screws
3 Process pipeline
4 Temperature sensor
5 Thermal decoupling
6 Spring load
7 Electrical connection M12
8 Replaceable measuring insert
9 Heat insulated pipe collar

Resitance thermometer with thermowell in Clamp-on design

© Siemens 2020

Clamp-on design

Selection and Ordering data

	Article No.	Ord. code
SITRANS TS300 ↗	**7MC8016-** ■■■■	**0** ■■■
for food, pharmaceuticals and biotechnology **Clamp-on design for the measuring of the pipe surface temperature**		
↗ Click on the Article No. for the online configuration in the PIA Life Cycle Portal.		
Design		
Acc. to IEC 60751, class A [-40 ... +150 °C (-40 ... +302 °F)]	1	
Type of connection		
Device plug M12 x 1	A	
connection head form B, stainless steel	B	
4 ... 20 mA compact transmitter SITRANS TH100slim (standard measuring range 0 ... 100 °C (32 ... 212 °F))	C	
Mounting with pipe collar		
Pipe outer-Ø mm (inch) / **Collar size mm (inch)**		
4 (0.16) / 50 x 35 x 20 (1.97 x 1.38 x 0.79)		A1
6 (0.24)		B1
6.35 (0.25)		C1
8 (0.31)		D1
9.35 (0.37)		E1
10 (0.39)		F1
10.2 (0.40)		G1
10.3 (0.41)		H1
12 (0.47)		J1
12.7 (0.50)		K1
13 (0.51)		L1
13.5 (0.53)		M1
13.7 (0.54)		N1
14 (0.55)		P1
15.88 (0.62)		Q1
16 (0.63)		R1
17.2 (0.68)		S1
18.0 (0.71) / 70 x 70 x 20 (2.76 x 2.76 x 0.79)		A2
19.0 (0.74)		B2
19.05 (0.75)		C2
20.0 (0.79)		D2
21.3 (0.84)		E2
22.0 (0.87)		F2
23.0 (0.90)		G2
24.0 (0.94)		H2
25.0 (0.98)		J2
25.4 (1.00)		K2
26.7 (1.05)		L2
26.9 (1.06)		M2
28.0 (1.10)		N2
29.0 (1.14)		P2
30.0 (1.18)		Q2
31.8 (1.25)		R2
32.0 (1.26)		S2
33.4 (1.31)		T2
33.7 (1.33)		U2
34.0 (1.34)		V2
35.0 (1.38)		W2
36.0 (1.42)		X2

Selection and Ordering data

	Article No.	Ord. code
SITRANS TS300	**7MC8016-** ■■■■	**0** ■■■
for food, pharmaceuticals and biotechnology **Clamp-on design for the measuring of the pipe surface temperature**		
38.0 (1.49)		Y2
38.1 (1.50)		A3
41.0 (1.61)		B3
42.4 (1.67)		C3
44.5 (1.75)		D3
48.3 (1.90) / 90 x 85 x 20 (3.54 x 3.35 x 0.79)		E3
50.8 (2.00)		F3
53.0 (2.09)		G3
54.0 (2.13)		H3
57.0 (2.24)		J3
Always indicate external tube diameter for[1]: • Installation with pipe collar and deviating external tube diameter (S11-S19) • Securing with clamps (S21-S23) • Clamping band installation (S31-S35)		Z0 K1 Y

[1] Special sizes for pipe outer diameters: In order to process "Z0" special sizes, the following two additional items of information are essential:
- the required diameter specified in plain text under "K1Y"
- Selection of the corresponding pipe collar, clamping band or clamping bracket size (Order codes "S11" to "S35")

Recommended for all versions: Heat-conductive-compound, silicone-free, syringe 3 g, Order code: L15 (see page 2/54)

© Siemens 2020

Dimensional drawings

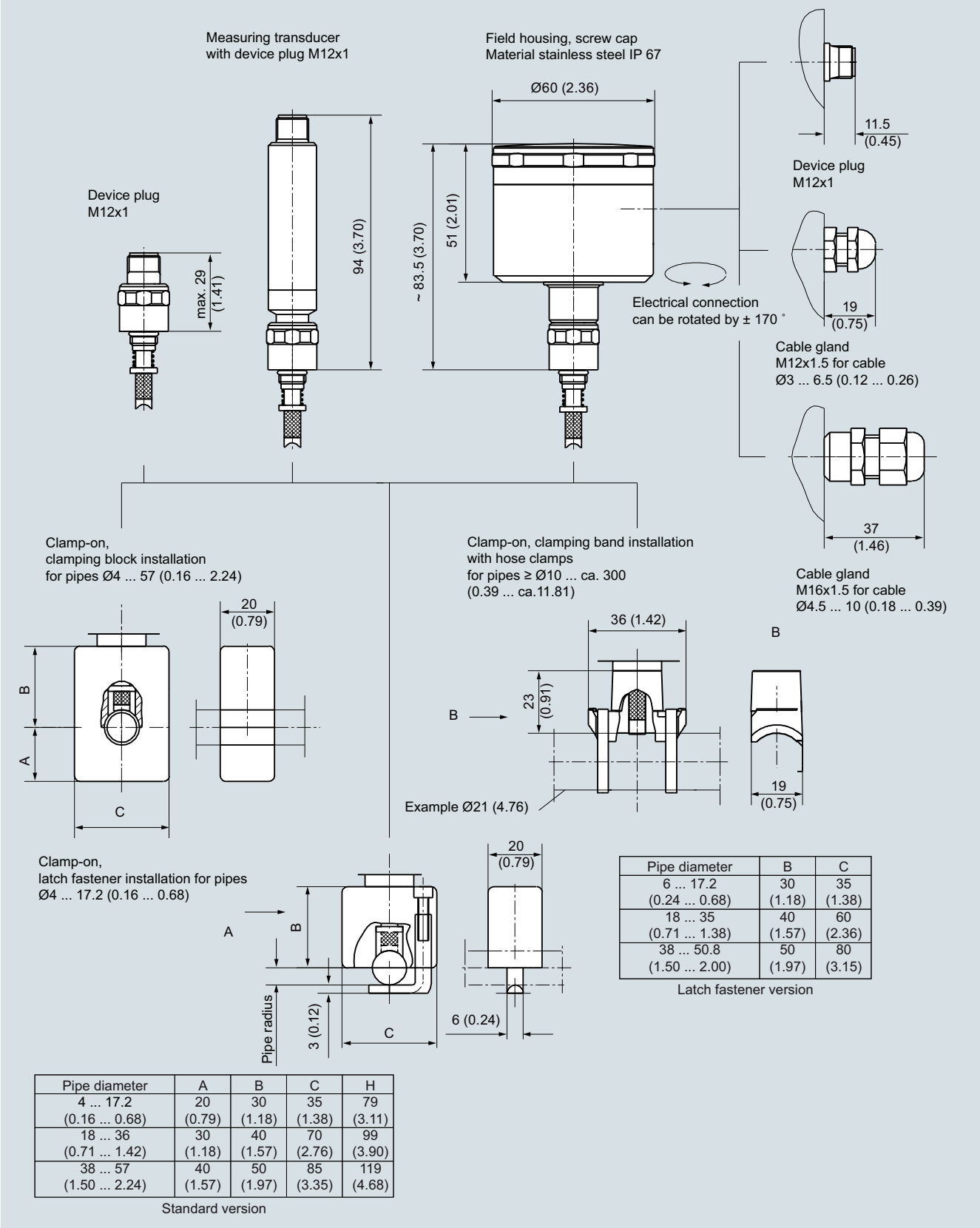

Pipe diameter	B	C
6 ... 17.2 (0.24 ... 0.68)	30 (1.18)	35 (1.38)
18 ... 35 (0.71 ... 1.38)	40 (1.57)	60 (2.36)
38 ... 50.8 (1.50 ... 2.00)	50 (1.97)	80 (3.15)

Latch fastener version

Pipe diameter	A	B	C	H
4 ... 17.2 (0.16 ... 0.68)	20 (0.79)	30 (1.18)	35 (1.38)	79 (3.11)
18 ... 36 (0.71 ... 1.42)	30 (1.18)	40 (1.57)	70 (2.76)	99 (3.90)
38 ... 57 (1.50 ... 2.24)	40 (1.57)	50 (1.97)	85 (3.35)	119 (4.68)

Standard version

SITRANS TS300 Clamp-on design, device plug, field housing, cable gland, variants, dimensions in mm (inch)

© Siemens 2020

2

Selection and Ordering data		Order code
Further designs		
Add "**-Z**" to Article No. and specify Order code.		
Explosion protection		
Manufacturers declaration for intrinsically safe circuits		**E01**
Built in head transmitter		
Measuring range to be set must be specified with plain text data "Y11".		
SITRANS TH100, input 1 x Pt100, 4 ... 20 mA		**T12**
SITRANS TH320, input 1 x universal, 4 ... 20 mA		**T24**
SITRANS TH320, input 1 x universal, HART		**T34**
SITRANS TH420, input 2 x universal, HART		**T35**
SITRANS TH400, input 1 x universal, PA		**T40**
SITRANS TH400, input 1 x universal, PA, Ex		**T41**
SITRANS TH400, input 1 x universal, FF		**T45**
SITRANS TH400, input 1 x universal, FF, Ex		**T46**
Transmitter options		
Transmitter, enter complete setting in plain text (Y11:+/-NNNN ... +/-NNNN C,F)		**Y11**
Enter measuring point (max. 8 characters) in plain text		**Y17**
Transmitter, enter measuring point description (max. 16 characters) in plain text		**Y23**
Transmitter, enter measuring point text (max. 32 characters) in plain text		**Y24**
Transmitter, enter bus address in plain text		**Y25**
Transmitter, fail-safe value 3.6 mA (instead of 22.8 mA)		**U36**
SITRANS TH320/420 transmitter with SIL2/3 certificate		**C20**
Transmitter test protocol (5 points)		**C11**
Other cable gland (only for connection head)		
Polyamide for cable diameter 4.5 … 10 mm (0.18 … 0.39 inch)		**K02**
Stainless steel for cable diameter 3 … 6,5 mm (0.12 … 0.25 inch)		**K03**
Device plug M12 x 1		**K11**
Deviating pipe; mm (inch)	**Collar size; mm (inch)**	
4 … 17.2 (0.16 … 0.68)	50 x 35 (1.97 x 1.38)	**S11**
18 … 38 (0.71 … 1.49)	70 x 70 (2.76 x 2.76)	**S12**
38.1 … 57 (1.5 … 2.24)	90 x 85 (3.54 x 3.35)	**S13**
Larger nominal diameters on request		**S19**
Space-saving mounting (latch fastening)		
Outer pipe; mm (inch):		
4 … 17.2 (0.16 … 0.68)		**S21**
18 … 35 (0.71 … 1.38) (Clamping band version recommended, see below)		**S22**
38 … 50.8 (1.45 … 2.00) (Clamping band version recommended, see below)		**S23**
Clamping band installation		
Outer pipe; mm (inch):		
10 ... 57 (0.39 ... 2.24)		**S31**
58 ... 220 (2.28 ... 8.66)		**S32**
Without clamping band		**S35**

Selection and Ordering data	Order code
Further Options	
Assignment marking, engraving instead of adhesive label (Serial number and pipe diameter on plug and plastic block)	**L11**
2 mm drain hole	**L12**
Sensor 4-wire connection	**L14**
Heat-conductive-compound, silicone-free, syringe 3 g	**L15**
Suffixes	
Add "**-Z**" to Article No. and specify Order code and plain text.	
TAG plate made of stainless steel (specify TAG No. in plain text)	**Y15**
Test report at 0 %, 50 % and 100 % (specify the measuring range in plain text) If optional head transmitters are integrated, please note that all calibration points are located in the set measuring range. If the points are located outside the standard measuring range, a Y01 addition is always required.	**Y33**
Special version, specify in plain text	**Y98**
Process number for special version	**Y99**

Accessories, see page 2/251.

Ordering examples:

Deviating tube diameter 28.5 mm:
7MC8016-1AZ00-Z K1Y+S12 {K1Y: 28.5 mm}

Space-saving mounting, tube diameter 38 mm:
7MC8016-1AZ00-Z K1Y + S23 {K1Y: 38 mm};
as of diameter ≥ 18 mm, we recommend using the clamping band installation.

Clamping band installation, tube diameter 111 mm:
7MC8016-1AZ00-Z K1Y+S32 {K1Y: 111 mm}

© Siemens 2020

Dimensional drawings

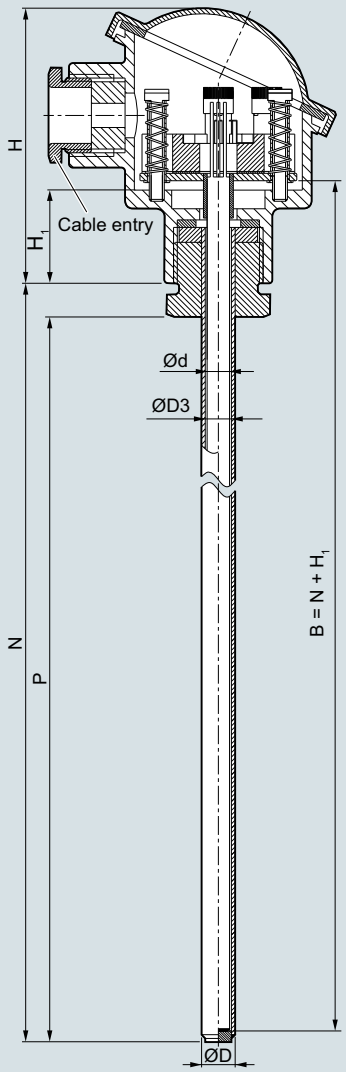

B	Measuring insert length
Ød	Measuring insert outer diameter (6 (0.24))
ØD	Process connection outer diameter
ØD3	Thermowell internal diameter
H	Head height
H_1	Type Axx = 41 (1.61) Type Bxx = 26 (1.02)
N	Nominal length
P	Space for process connection P ~ N - 9 (0.35), floor strength 3 mm

SITRANS TS500, temperature sensors for vessels and pipes, tubular thermowell for low to medium stress, without process connection, without extension, plug-in or for use with sliding compression joints, dimensions in mm (inch)

© Siemens 2020

Type 2, without process connection

Selection and Ordering data	Article No.
SITRANS TS500 ↗	**7MC751-** ■ - ■■■■■ - ■■■
Tubular thermowell for low to medium stress, according to DIN 43722, Type 2, without process connection, without extension, plug-in or use with moveable compression fittings	
↗ Click on the Article No. for the online configuration in the PIA Life Cycle Portal.	
Material, in contact with media	
316Ti (1.4571)	1
316L (1.4404 or 1.4435)	2
Process connection	
Without process connection (for compression fitting) N=U	0 N
Thermowell form	
2; 9 mm (0.35 inch)	A
2; 12 mm (0.47 inch)	B
Insertion length U (=N), Standard	
160 mm (6.3 inch)	0 4
250 mm (9.84 inch)	1 2
400 mm (15.75 inch)	2 2
Insertion length U (=N), customer-specific	
enter customer specific length with Y44, see Order codes on page 2/58	
80 ... 100 mm (3.15 ... 3.94 inch) Initial: 100 mm (3.94 inch)	0 1
101 ... 120 mm (3.98 ... 4.72 inch) Initial: 120 mm (4.72 inch)	0 2
121 ... 140 mm (4.76 ... 5.51 inch) Initial: 140 mm (5.51 inch)	0 3
141 ... 160 mm (5.55 ... 6.30 inch) Initial: 160 mm (6.3 inch)	0 4
161 ... 180 mm (6.34 ... 7.09 inch) Initial: 180 mm (7.09 inch)	0 5
181 ... 200 mm (7.13 ... 7.87 inch) Initial: 200 mm (7.87 inch)	0 6
201 ... 220 mm (7.91 ... 8.66 inch) Initial: 220 mm (8.66 inch)	0 7
221 ... 240 mm (8.7 ... 9.45 inch) Initial: 225 mm (8.86 inch)	1 1
241 ... 260 mm (9.48 ... 10.24 inch) Initial: 250 mm (9.84 inch)	1 2
261 ... 280 mm (10.28 ... 11.02 inch) Initial: 280 mm (11.02 inch)	1 3
281 ... 300 mm (11.02 ... 11.81 inch) Initial: 285 mm (11.22 inch)	1 4
301 ... 320 mm (11.85 ... 12.6 inch) Initial: 315 mm (12.4 inch)	1 5
321 ... 340 mm (12.64 ... 13.39 inch) Initial: 340 mm (13.39 inch)	1 6
341 ... 360 mm (13.43 ... 14.17 inch) Initial: 360 mm (14.17 inch)	2 0
361 ... 380 mm (14.21 ... 14.96 inch) Initial: 380 mm (14.96 inch)	2 1
381 ... 400 mm (15 ... 15.75 inch) Initial: 400 mm (15.75 inch)	2 2
401 ... 420 mm (15.79 ... 16.54 inch) Initial: 420 mm (16.54 inch)	2 3
421 ... 440 mm (16.57 ... 17.32 inch) Initial: 440 mm (17.32 inch)	2 4
441 ... 460 mm (17.36 ... 18.11 inch) Initial: 460 mm (18.11 inch)	2 5
461 ... 480 mm (18.15 ... 18.90 inch) Initial: 465 mm (18.30 inch)	2 6
481 ... 500 mm (18.94 ... 19.68 inch) Initial: 500 mm (19.68 inch)	2 7
501 ... 550 mm (19.72 ... 21.65 inch) Initial: 510 mm (20.08 inch)	3 1
551 ... 600 mm (21.69 ... 23.62 inch) Initial: 600 mm (23.62 inch)	3 2
601 ... 650 mm (23.66 ... 25.59 inch) Initial: 650 mm (25.59 inch)	3 3

Selection and Ordering data	Article No.
SITRANS TS500	**7MC751-** ■ - ■■■■■ - ■■■
Tubular thermowell for low to medium stress, according to DIN 43722, Type 2, without process connection, without extension, plug-in or use with moveable compression fittings	
651 ... 700 mm (25.63 ... 27.56 inch) Initial: 700 mm (27.56 inch)	3 4
701 ... 750 mm (27.6 ... 29.53 inch) Initial: 750 mm (29.53 inch)	3 5
751 ... 800 mm (29.57 ... 31.50 inch) Initial: 800 mm (31.50 inch)	3 6
801 ... 850 mm (31.5 ... 33.47 inch) Initial: 850 mm (33.47 inch)	3 7
851 ... 900 mm (33.5 ... 35.43 inch) Initial: 900 mm (35.43 inch)	4 1
901 ... 950 mm (35.47 ... 37.4 inch) Initial: 950 mm (37.4 inch)	4 2
951 ... 1 000 mm (37.44 ... 39.37 inch) Initial: 1 000 mm (39.37 inch)	4 3
1001 ... 1 100 mm (39.4 ... 43.30 inch) Initial: 1 100 mm (43.30 inch)	4 4
1 101 ... 1 200 mm (43.35 ... 47.24 inch) Initial: 1 200 mm (47.24 inch)	4 5
1 201 ... 1 300 mm (47.28 ... 51.18 inch) Initial: 1 300 mm (51.18 inch)	4 6
1 301 ... 1 400 mm (51.22 ... 55.11 inch) Initial: 1400 mm (55.11 inch)	4 7
1 401 ... 1 500 mm (55.15 ... 59.05 inch) Initial: 1 500 mm (59.05 inch)	5 1
Extension X	
Standard length for Type 2 as per DIN 43722 (without extension N=U)	0

Additional configurations on page after next page!

You find ordering examples on page 2/40!

© Siemens 2020

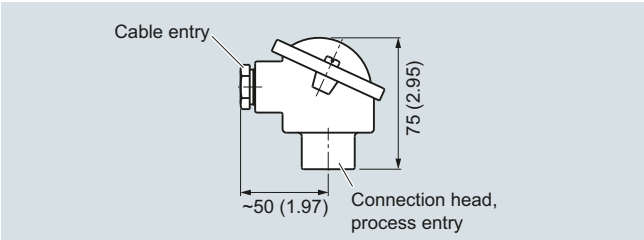

Connection head, aluminum, Type BA0, dimensions in mm (inch)

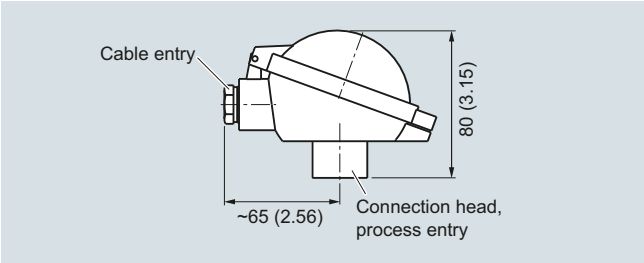

Connection head, aluminum, Type BB0, dimensions in mm (inch)

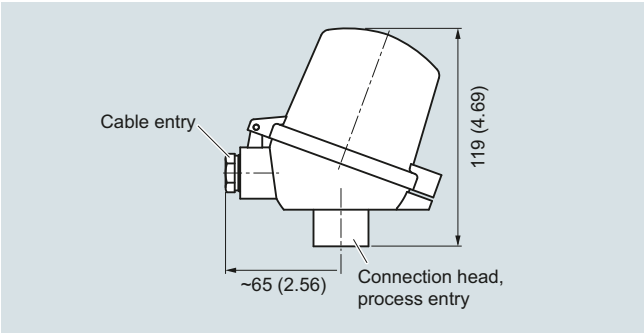

Connection head, aluminum, Type BC0, plastic, type BP0, dimensions in mm (inch)

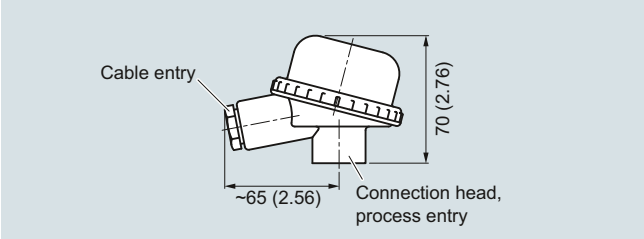

Connection head, plastic, Type BM0, dimensions in mm (inch)

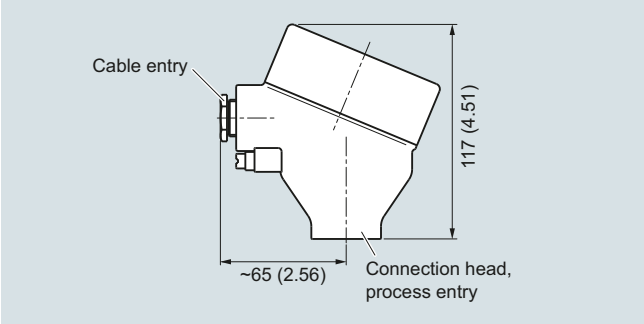

Connection head, aluminum, Type AG0, stainless steel, Type AU0, dimensions in mm (inch)

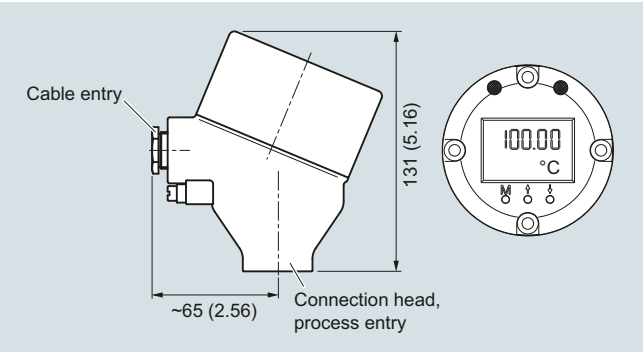

Connection head with 4-20 mA display, aluminum, Type AH0, stainless steel, Type AV0, dimensions in mm (inch)

© Siemens 2020

Type 2, without process connection

2

Selection and Ordering data	Article No.
SITRANS TS500 **Tubular thermowell for low to medium stress, according to DIN 43722, Type 2, without process connection, without extension, plug-in or use with moveable compression fittings**	**7MC751-** ■ - ■■■■■ - ■■■
Head	
Aluminum head, BA0, flange cover, Standard	A
Aluminum head, BB0, low hinged cover, screw connection	B
Aluminum head, BC0, high hinged cover, screw connection	C
Aluminum head, AG0, screw cover, suitable for suitable for Ex d[1]	G
Aluminum head, AH0, screw cover, suitable for Ex d, display[1]	H
Plastic head, BM0, screw cover	M
Plastic head, BP0, high hinged cover, screw connection	P
Stainless steel head, AU0, screw cover, suitable for Ex d[1]	U
Stainless steel head, AV0, screw cover, suitable for Ex d, display[1]	V
Sensor[2] Please note: The accuracy class range can be lower than the measuring range. For more information, see page 2/21	
Pt100, basis, -50 ... +400 °C (-58 ... +752 °F)	A
Pt100, vibration-resistant, -50 ... +400 °C (-58 ... +752 °F)	B
Pt100, expanded range, -196 ... +600 °C (-321 ... +1 112 °F)	C
Thermocouple Type K, -40 ... +1 000 °C (-40 ... +1 832 °F)	K
Thermocouple Type J, -40 ... +750 °C (-40 ... +1 382 °F)	J
Thermocouple Type N, -40 ... +1 000 °C (-40 ... +1 832 °F)	N
Sensor number/Accuracy Pt 100 connection: 1 x 4-wire connection or 2 x 3-wire connection, see "Measuring technology: connection types", page 2/23	
Single, basic accuracy (Class 2/Class B)	1
Single, increased accuracy (Class 1/Class A)	2
Single, highest accuracy (Class AA)	3
Double, basic accuracy (Class 2/Class B)	5
Double, increased accuracy (Class 1/Class A)	6
Double, highest accuracy (Class AA)	7

[1] Ex d in connection with Order code E03

[2] Pt1000 versions are also available. To find these, please switch to Online Configuration in the PIA Life Cycle Portal: www.siemens.com/pia-portal

Selection and Ordering data	Order code
Further designs Add "**-Z**" to Article No. and specify Order code.	
Insertion length customer-specific Select range, enter desired length in plain text (No entry = standard length)	**Y44**
Options Add "**-Z**" to Article No. and add options, separate extensions with "+".	
Built-in head transmitter Measuring range to be set must be specified with plain text data "Y01".	
SITRANS TH100, input 1 x Pt100, 4 ... 20 mA	**T12**
SITRANS TH320, input 1 x universal, 4 ... 20 mA	**T24**
SITRANS TH320, input 1 x universal, HART	**T34**
SITRANS TH420, input 2 x universal, HART	**T35**
SITRANS TH400, input 1 x universal, PA	**T40**
SITRANS TH400, input 1 x universal, PA, Ex	**T41**
SITRANS TH400, input 1 x universal, FF	**T45**
SITRANS TH400, input 1 x universal, FF, Ex	**T46**
Explosion protection	
Without explosion protection requirements (Europe, Australia, New Zealand)	**E00**
Intrinsic safety "i"/"IS"[1] according to ATEX and IECEx (Europe, Australia, New Zealand)	**E01**
Flameproof enclosure "d"/"XP; dust protection through housing "t"/"DIP"[2] according to ATEX and IECEx (Europe, Australia, New Zealand)	**E03**
Non-sparking "ec" according to ATEX and IECEx (Europe, Australia, New Zealand)	**E04**
Without explosion protection requirements (USA, Canada) Basis FM	**E10**
Flameproof enclosure "d"/"XP; dust protection through housing "t"/"DIP"[2] according to cFMus (USA, Canada); other connections (M,G,R)	**E14**
Non-sparking "nA"/"NI" according to cFMus (USA, Canada)	**E16**
Without explosion protection requirements (USA, Canada), Basis CSA	**E17**
Intrinsic safety "i"/"IS"[1] according to cCSAus (USA, Canada)	**E18**
Flameproof enclosure "d"/"XP; dust protection through housing "t"/"DIP"[2] according to cCSAus (USA); other connections (M, G, R)	**E21**
Non-sparking "nA"/"NI" according to cCSAus (USA, Canada)	**E23**
Without explosion protection requirements (China)	**E54**
Intrinsic safety "i"/"IS"[1] according to NEPSI (China)	**E55**
Flameproof enclosure "d"; dust protection through housing "t"[2] according to NEPSI (China)	**E56**
Non-sparking "nA"/"NI" according to NEPSI (China)	**E57**
Without explosion protection requirements (EAC)	**E80**
Intrinsic safety "i"/"IS"[1] according to EACEx (EAC)	**E81**
Flameproof enclosure "d"/"XP; dust protection through housing "t"/"DIP"[2] according to EACEx (EAC)	**E82**
Non-sparking "nA"/"NI" according to EACEx (EAC)	**E83**
Marine approvals	
Det Norske Veritas Germanischer Lloyd (DNV GL)	**D01**

© Siemens 2020

Selection and Ordering data	Order code
Certificates and approvals	
EN 10204-3.1 Inspection certificate for materials coming into contact with media	**C12**
EN 10204-3.1 Inspection certificate for hydrostatic pressure test	**C31**
EN 10204-3.1 Inspection certificate for helium leak test	**C32**
EN 10204-3.1 Inspection certificate for dye-penetration-test	**C33**
EN 10204-3.1Inspection certificate: visual, measurement and functional inspection	**C34**
EN 10204-2.1: Declaration of compliance with the order	**C35**
ISO 9001 grease-free (cleaned for e.g. oxygen applications)	**C51**
EN 10204-3.1 Acceptance test certificate "Positive Materials Identification" (PMI)	**On request**
Designation, calibration	
Stainless steel TAG plate , enter lettering in plain text	**Y15**
Plant calibration per 1 point, enter temperature in plain text	**Y33**
Transmitter options	
Transmitter, enter complete setting in plain text (Y01:+/-NNNN ... +/-NNNN C,F), marking on the device when Order code "Y15" is selected	**Y01**
Enter measuring point (max. 8 characters) in plain text	**Y17**
Transmitter, enter measuring point description (max. 16 characters) in plain text	**Y23**
Transmitter, enter measuring point text (max. 32 characters) in plain text	**Y24**
Transmitter, enter bus address in plain text	**Y25**
Transmitter, fail-safe value 3.6 mA (instead of 22.8 mA)	**U36**
SITRANS TH320/420 transmitter with SIL2/3 certificate	**C20**
Transmitter test protocol (5 points)	**C11**
Further options	
Connection form, flying leads (for the direct transmitter assembly, delivery without screws and springs)	**G01**
M12 device plug (in combination with transmitter, Non-Ex and intrinsically safe, max. IP65/67)	**G12**
Han 7D device plug (Non Ex and intrinsically safe, without mating connector max. IP65/67)	**G13**
Connection head with ½" NPT thread without cable gland, for AU0 and AH0 only IP66	**G20**
with outer earth screw for heads AG0, AH0, AU0 and AV0	**A02**
with inner earth screw for heads BC0, AG0, AH0, AU0 and AV0	**A03**
Compression fitting G½", enclosed	**A31**
Compression fitting NPT½", enclosed	**A32**
Option not found?	
Handling number special version	**Y99**

1) Please select Ex i version of the optional transmitter.

2) Only with connection heads code AG0, AH0, AU0, AV0, without cable gland (please select non-Ex version of the optional transmitter).

You find ordering examples on page 2/40.
Accessories, see page 2/251.

© Siemens 2020

Dimensional drawings

SITRANS TS500, temperature sensors for vessels and pipes, tubular thermowell for low to medium stress, type 2N similar to DIN 43772, screwed design, without extension, non-adjustable connection head. For Ex-versions the maximum process temperature is 100 °C.

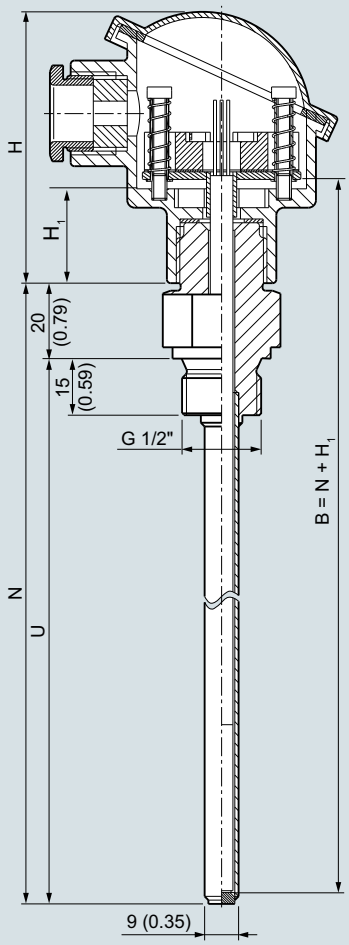

H Head height
N Nominal length
U Insertion length, floor strength 3 mm
H_1 Type Axx = 41 (1.61)
Type Bxx = 26 (1.02)

Connection type "G", dimensions in mm (inch)

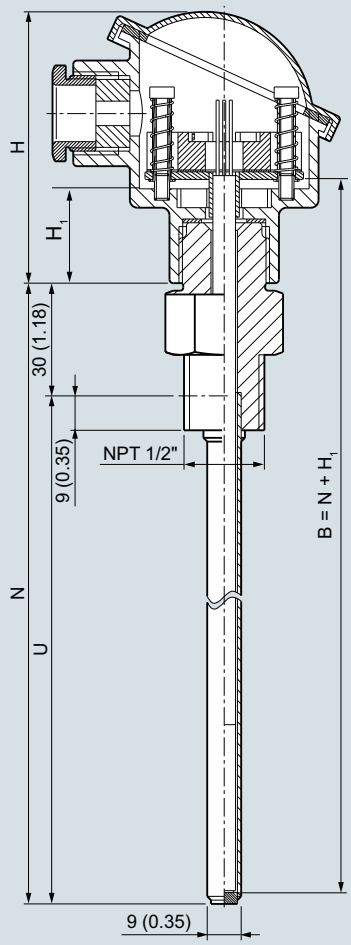

H Head height
N Nominal length
U Insertion length, floor strength 3 mm

Connection type "NPT", dimensions in mm (inch)

© Siemens 2020

Selection and Ordering data	Article No.
SITRANS TS500 ↗	**7MC751-**
Tubular thermowell, low to medium stress, Type 2N similar to DIN 43722, screwed design, without extension	■ - ■■■■■ - ■■■■
↗ Click on the Article No. for the online configuration in the PIA Life Cycle Portal.	
Material, in contact with media	
316Ti (1.4571)	1
316L (1.4404 or 1.4435)	2
Process connection	
G ½" (½"BSPP)	1 C
½" NPT	1 J
Thermowell form	
2N, 9 mm (0.35 inch)	A
Standard insertion length	
100 mm (3.97 inch)	0 1
160 mm (6.30 inch)	0 4
230 mm (9.06 inch)	1 0
360 mm (14.17 inch)	2 0
510 mm (20.08 inch)	3 1
Customer-specific insertion length	
enter customer specific length with Y44, see page 2/63 Order codes	
80 ... 100 mm (3.15 ... 3.94 inch) Initial: 100 mm (3.94 inch)	0 1
101 ... 120 mm (3.98 ... 4.72 inch) Initial: 120 mm (4.72 inch)	0 2
121 ... 140 mm (4.76 ... 5.51 inch) Initial: 140 mm (5.51 inch)	0 3
141 ... 160 mm (5.55 ... 6.30 inch) Initial: 160 mm (6.30 inch)	0 4
161 ... 180 mm (6.34 ... 7.09 inch) Initial: 180 mm (7.09 inch)	0 5
181 ... 200 mm (7.13 ... 7.87 inch) Initial: 200 mm (7.87 inch)	0 6
201 ... 220 mm (7.91 ... 8.66 inch) Initial: 220 mm (8.66 inch)	0 7
221…240 mm (8.70 ... 9.45 inch) Initial: 230 mm (9.06 inch)	1 0
241…260 mm (9.49 ... 10.24 inch) Initial: 250 mm (9.84 inch)	1 2
261…280 mm (10.28 ...11.02 inch) Initial: 280 mm (11.02 inch)	1 3
281…300 mm (11.06 ... 11.81 inch) Initial: 285 mm 11.22 inch)	1 4
301…320 mm (11.85 ... 13.00 inch) Initial: 315 mm (12.40 inch)	1 5
321…340 mm (12.64 ... 13.39 inch) Initial: 340 mm (13.39 inch)	1 6
341…360 mm (13.43 ... 14.17 inch) Initial: 360 mm (14.17 inch)	2 0
361…380 mm (14.21 ... 14.96 inch) Initial: 380 mm (14.96 inch)	2 1
381…400 mm (14.99 ... 15.75 inch) Initial: 400 mm (15.75 inch)	2 2
401…420 mm (15.79 ... 16.54 inch) Initial: 420 mm (16.54 inch)	2 3
421…440 mm (16.57 ... 17.32 inch) Initial: 440 mm (17.32 inch)	2 4
441…460 mm (17.36 ... 18.11 inch) Initial: 460 mm (18.11 inch)	2 5
461…480 mm (18.15 ... 18.90 inch) Initial: 465 mm (18.30 inch)	2 6
481…500 mm (18.94 ... 19.69 inch) Initial: 500 mm (19.69 inch)	2 7

Selection and Ordering data	Article No.
SITRANS TS500	**7MC751-**
Tubular thermowell, low to medium stress, Type 2N similar to DIN 43722, screwed design, without extension	■ - ■■■■■ - ■■■■
501…550 mm (19.72 ... 21.65 inch) Initial: 510 mm (20.08 inch)	3 1
551…600 mm (21.69 ... 23.62 inch) Initial: 600 mm (23.62 inch)	3 2
601…650 mm (23.66 ... 25.59 inch) Initial: 650 mm (25.59 inch)	3 3
651…700 mm (25.63 ... 27.56 inch) Initial: 700 mm (27.56 inch)	3 4
701…750 mm (27.60 ... 29.53 inch) Initial: 750 mm (29.53 inch)	3 5
751…800 mm (29.57 ... 31.50 inch) Initial: 800 mm (31.50 inch)	3 6
801…850 mm (31.54 ... 33.46 inch) Initial: 850 mm (33.46 inch)	3 7
851…900 mm (33.50 ... 35.43 inch) Initial: 900 mm (35.43 inch)	4 1
901…950 mm (35.47 ... 37.40 inch) Initial: 950 mm (37.40 inch)	4 2
951…1 000 mm (37.44 ... 39.37 inch) Initial: 1 000 mm (39.37 inch)	4 3
1 001…1 100 mm (39.41 ... 43.31 inch) Initial: 1 100 mm (43.31 inch)	4 4
1 101…1 200 mm (43.35 ... 47.24 inch) Initial: 1 200 mm (47.24 inch)	4 5
1 201…1 300 mm (47.28 ... 51.18 inch) Initial: 1 300 mm (51.18 inch)	4 6
1 301…1 400 mm (51.22 ... 55.12 inch) Initial: 1400 mm (55.12 inch)	4 7
1 401…1 500 mm (55.16 ... 59.05 inch) Initial: 1 500 mm (59.05 inch)	5 1
Extension X	
without neck tube, (non-adjustable)	0

Additional configurations on page after next page!

You find ordering examples on page 2/40!

© Siemens 2020

Type 2N, screwed design

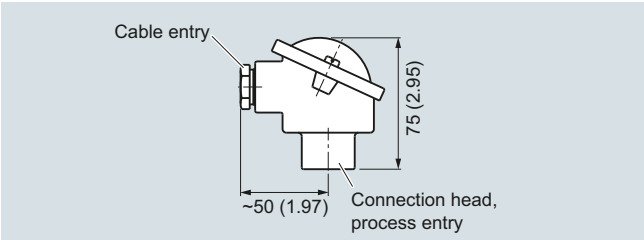

Connection head, aluminum, Type BA0, dimensions in mm (inch)

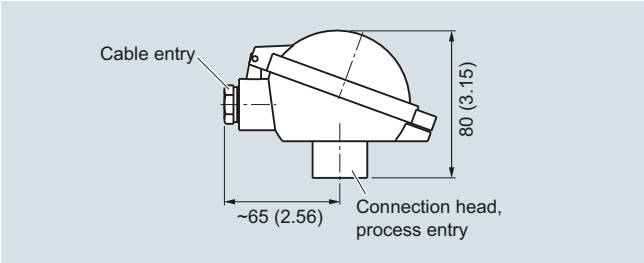

Connection head, aluminum, Type BB0, dimensions in mm (inch)

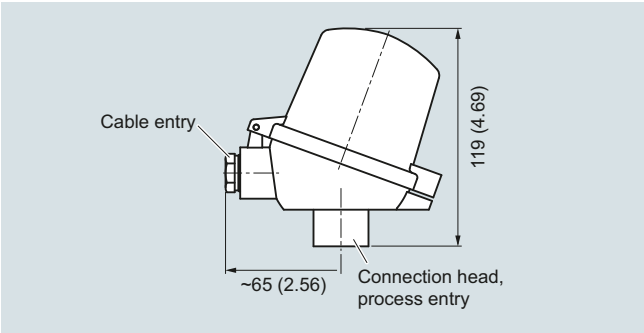

Connection head, aluminum, Type BC0, plastic, type BP0, dimensions in mm (inch)

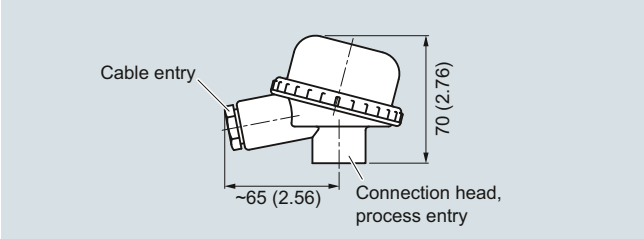

Connection head, plastic, Type BM0, dimensions in mm (inch)

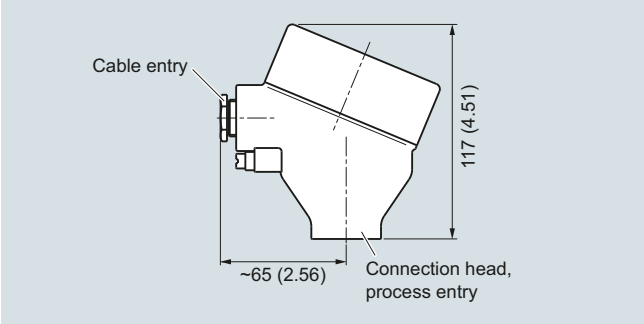

Connection head, aluminum, Type AG0, stainless steel, Type AU0, dimensions in mm (inch)

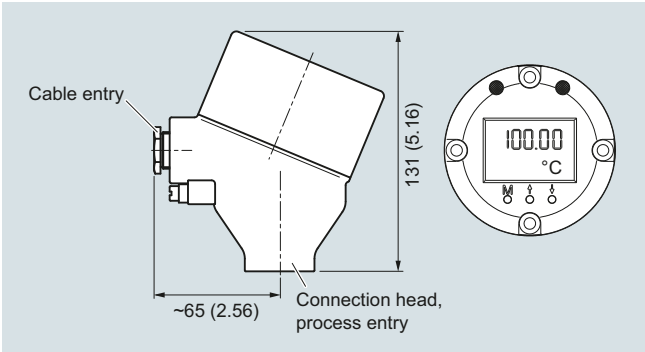

Connection head with 4-20 mA display, aluminum, Type AH0, stainless steel, Type AV0, dimensions in mm (inch)

© Siemens 2020

Selection and Ordering data	Article No.
SITRANS TS500 **Tubular thermowell, low to medium stress, Type 2N similar to DIN 43722, screwed design, without extension, for maximum process temperatures of 100 °C**	**7MC751-** ■ - ■■■■■ - ■■■
Head	
Aluminum head, BA0, flange cover, Standard	A
Aluminum head, BB0, low hinged cover, screw connection	B
Aluminum head, BC0, high hinged cover, screw connection	C
Aluminum head, AG0, screw cover, suitable for Ex d[1]	G
Aluminum head, AH0, screw cover, suitable for Ex d, display[1]	H
Plastic head, BM0, screw cover	M
Plastic head, BP0high hinged cover, screw connection	P
Stainless steel head, AU0, screw cover, suitable for Ex d[1]	U
Stainless steel head, AV0, screw cover, suitable for Ex d, display[1]	V
Sensor[2] Please note: The accuracy class range can be lower than the measuring range. For more information, see page 2/21	
Pt100, basis, -50 ... +400 °C (-58 ... +752 °F)	A
Pt100, vibration-resistant, -50 ... +400 °C (-58 ... +752 °F)	B
Pt100, expanded range, -196 ... +600 °C (-321 ... +1 112 °F)	C
Thermocouple Type K, -40 ... +1 000 °C (-40 ... +1 832 °F)	K
Thermocouple Type J, -40 ... +750 °C (-40 ... +1 382 °F)	J
Thermocouple Type N, -40 ... +1 000 °C (-40 ... +1 832 °F)	N
Sensor number/Accuracy Pt 100 connection: 1 x 4-wire connection or 2 x 3-wire connection, see "Measuring technology: connection types", page 2/23	
Single, basic accuracy (Class 2/Class B)	1
Single, increased accuracy (Class 1/Class A)	2
Single, highest accuracy (Class AA)	3
Double, basic accuracy (Class 2/Class B)	5
Double, increased accuracy (Class 1/Class A)	6
Double, highest accuracy (Class AA)	7

[1] Ex d in connection with Order code E03

Pt1000 versions are also available. To find these, please switch to Online Configuration in the PIA Life Cycle Portal: www.siemens.com/pia-portal

Selection and Ordering data	Order code
Further designs Add "**-Z**" to Article No. and specify Order code.	
Insertion length customer-specific Select range, enter desired length in plain text (No entry = standard length)	**Y44**
Options Add "**-Z**" to Article No. and add options, separate extensions with "+".	
Built-in head transmitter Measuring range to be set must be specified with plain text data "Y01".	
SITRANS TH100, input 1 x Pt100, 4 ... 20 mA	**T12**
SITRANS TH320, input 1 x universal, 4 ... 20 mA	**T24**
SITRANS TH320, input 1 x universal, HART	**T34**
SITRANS TH420, input 2 x universal, HART	**T35**
SITRANS TH400, input 1 x universal, PA	**T40**
SITRANS TH400, input 1 x universal, PA, Ex	**T41**
SITRANS TH400, input 1 x universal, FF	**T45**
SITRANS TH400, input 1 x universal, FF, Ex	**T46**
Explosion protection	
Without explosion protection requirements (Europe, Australia, New Zealand)	**E00**
Intrinsic safety "i"/"IS"[1] according to ATEX and IECEx (Europe, Australia, New Zealand)	**E01**
Flameproof enclosure "d"/"XP; dust protection through housing "t"/"DIP"[2] according to ATEX and IECEx (Europe, Australia, New Zealand)	**E03**
Non-sparking "ec" according to ATEX and IECEx (Europe, Australia, New Zealand)	**E04**
Without explosion protection requirements (USA, Canada) Basis FM	**E10**
Flameproof enclosure "d"/"XP; dust protection through housing "t"/"DIP"[2] according to cFMus (USA, Canada); other connections (M,G,R)	**E14**
Non-sparking "nA"/"NI" according to cFMus (USA, Canada)	**E16**
Without explosion protection requirements (USA, Canada), Basis CSA	**E17**
Intrinsic safety "i"/"IS"[1] according to cCSAus (USA, Canada)	**E18**
Flameproof enclosure "d"/"XP; dust protection through housing "t"/"DIP"[2] according to cCSAus (USA); other connections (M, G, R)	**E21**
Non-sparking "nA"/"NI" according to cCSAus (USA, Canada)	**E23**
Without explosion protection requirements (China)	**E54**
Intrinsic safety "i"/"IS"[1] according to NEPSI (China)	**E55**
Flameproof enclosure "d"; dust protection through housing "t"[2] according to NEPSI (China)	**E56**
Non-sparking "nA"/"NI" according to NEPSI (China)	**E57**
Without explosion protection requirements (EAC)	**E80**
Intrinsic safety "i"/"IS"[1] according to EACEx (EAC)	**E81**
Flameproof enclosure "d"/"XP; dust protection through housing "t"/"DIP"[2] according to EACEx (EAC)	**E82**
Non-sparking "nA"/"NI" according to EACEx (EAC)	**E83**
Marine approvals	
Det Norske Veritas Germanischer Lloyd (DNV GL)	**D01**

© Siemens 2020

Type 2N, screwed design

Selection and Ordering data	Order code
Certificates and approvals	
EN 10204-3.1 Inspection certificate for materials coming into contact with media	**C12**
EN 10204-3.1 Inspection certificate for hydrostatic pressure test	**C31**
EN 10204-3.1 Inspection certificate for helium leak test	**C32**
EN 10204-3.1 Inspection certificate for dye-penetration-test	**C33**
EN 10204-3.1 Inspection certificate: visual, measurement and functional inspection	**C34**
EN 10204-2.1: Declaration of compliance with the order	**C35**
ISO 9001 grease-free (cleaned for e.g. oxygen applications)	**C51**
EN 10204-3.1 Acceptance test certificate "Positive Materials Identification" (PMI)	**On request**
Designation, calibration	
Stainless steel TAG plate , enter lettering in plain text	**Y15**
Plant calibration per 1 point, enter temperature in plain text	**Y33**
Transmitter options	
Transmitter, enter complete setting in plain text (Y01:+/-NNNN ... +/-NNNN C,F), marking on the device when Order code "Y15" is selected	**Y01**
Enter measuring point (max. 8 characters) in plain text	**Y17**
Transmitter, enter measuring point description (max. 16 characters) in plain text	**Y23**
Transmitter, enter measuring point text (max. 32 characters) in plain text	**Y24**
Transmitter, enter bus address in plain text	**Y25**
Transmitter, fail-safe value 3.6 mA (instead of 22.8 mA)	**U36**
SITRANS TH320/420 transmitter with SIL2/3 certificate	**C20**
Transmitter test protocol (5 points)	**C11**
Further options	
Connection form, flying leads (for the direct transmitter assembly, delivery without screws and springs)	**G01**
M12 device plug (in combination with transmitter, Non-Ex and intrinsically safe, max. IP65/67)	**G12**
Han 7D device plug (Non Ex and intrinsically safe, without mating connector max. IP65/67)	**G13**
Connection head with ½" NPT thread without cable gland, for AU0 and AH0 only IP66	**G20**
with outer earth screw for heads AG0, AH0, AU0 and AV0	**A02**
with inner earth screw for heads BC0, AG0, AH0, AU0 and AV0	**A03**
Option not found?	
Handling number special version	**Y99**

1) Please select Ex i version of the optional transmitter.

2) Only with connection heads code AG0, AH0, AU0, AV0, without cable gland (please select non-Ex version of the optional transmitter).

You find ordering examples on page 2/40.
Accessories, see page 2/251.

© Siemens 2020

Dimensional drawings

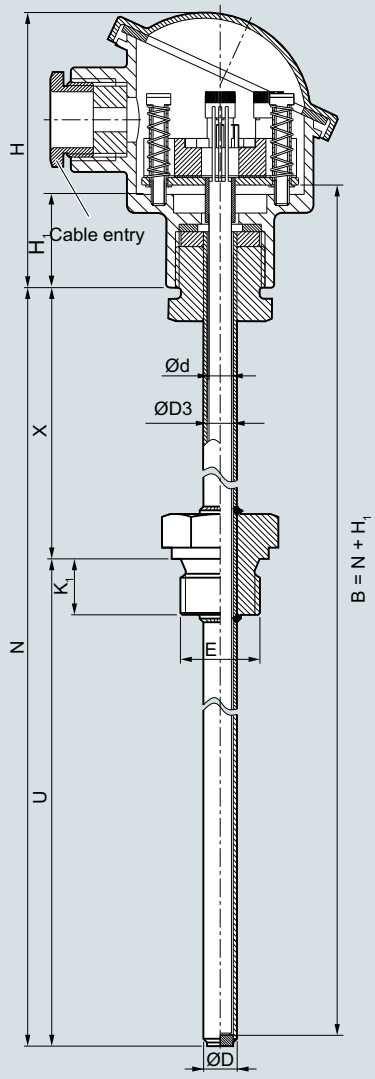

B	Measuring insert length
Ød	Measuring insert outer, diameter (6 (0.24))
ØD	Process connection, outer diameter
ØD3	Thermowell internal diameter
E	Process connection, thread size
H	Head height
H_1	Type Axx = 41 (1.61) Type Bxx = 26 (1.02)
K_1	Screw depth
N	Nominal length
U	Insertion length
X	Extension length, floor strength 3 mm

SITRANS TS500, temperature sensors for vessels and pipes, tubular thermowell for low to medium stress, according to DIN 43772, type 2G, screwed design, with extension, for screw-in depth dimensions, see page 2/15, dimensions in mm (inch).

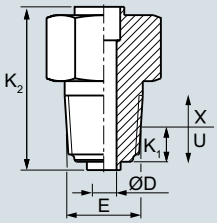

Process connection conical, dimensions in mm (inch)

© Siemens 2020

Type 2G, screwed design, with extension

Selection and Ordering data	Article No.	Ord. Code
SITRANS TS500 ↗	**7MC751-**	
Tubular thermowell, low to medium stress, according to DIN 43722, Type 2G, screwed design, with extension	■ - ■■■■■ - ■■■■	■■■
↗ Click on the Article No. for the online configuration in the PIA Life Cycle Portal.		
Material, in contact with media		
316Ti (1.4571)	1	
316L (1.4404 or 1.4435)	2	
Process connection		
Cylindrical: G½" (½" BSPP)	1 C	
Cylindrical: G¾" (¾" BSPP)	1 D	
Tapered: NPT½"	1 J	
Tapered: NPT¾"	1 K	
Tapered: NPT1"	1 L	
Cylindrical: M20 x 1.5	1 V	
Cylindrical: M27 x 2.0	1 W	
Cylindrical: M33 x 2.0	1 Y	
Thermowell form		
2G, 9 mm (0.35 inch)	A	
2G, 12 mm (0.47 inch)	B	
Insertion length U standard		
160 mm (6.30 inch)	0 4	
250 mm (9.84 inch)	1 2	
400 mm (15.75 inch)	2 2	
Insertion length U customer-specific		
enter customer specific length with Y44, see page 2/68 Order codes		
80 ... 100 mm (3.15 ... 3.94 inch) Initial: 100 mm (3.94 inch)	0 1	
101 ... 120 mm (3.98 ... 4.72 inch) Initial: 120 mm (4.72 inch)	0 2	
121 ... 140 mm (4.76 ... 5.51 inch) Initial: 140 mm (5.51 inch)	0 3	
141 ... 160 mm (5.55 ... 6.30 inch) Initial: 160 mm (6.30 inch)	0 4	
161 ... 180 mm (6.34 ... 7.09 inch) Initial: 180 mm (7.09 inch)	0 5	
181 ... 200 mm (7.13 ... 7.87 inch) Initial: 200 mm (7.87 inch)	0 6	
201 ... 220 mm (7.91 ... 8.66 inch) Initial: 220 mm (8.66 inch)	0 7	
221…240 mm (8.70 ... 9.45 inch) Initial: 225 mm (8.86 inch)	1 1	
241…260 mm (9.49 ... 10.24 inch) Initial: 250 mm (9.84 inch)	1 2	
261…280 mm (10.28 ...11.02 inch) Initial: 280 mm (11.02 inch)	1 3	
281…300 mm (11.06 ... 11.81 inch) Initial: 285 mm 11.22 inch)	1 4	
301…320 mm (11.85 ... 13.00 inch) Initial: 315 mm (12.40 inch)	1 5	
321…340 mm (12.64 ... 13.39 inch) Initial: 340 mm (13.39 inch)	1 6	
341…360 mm (13.43 ... 14.17 inch) Initial: 360 mm (14.17 inch)	2 0	
361…380 mm (14.21 ... 14.96 inch) Initial: 380 mm (14.96 inch)	2 1	
381…400 mm (14.99 ... 15.75 inch) Initial: 400 mm (15.75 inch)	2 2	
401…420 mm (15.79 ... 16.54 inch) Initial: 420 mm (16.54 inch)	2 3	
421…440 mm (16.57 ... 17.32 inch) Initial: 440 mm (17.32 inch)	2 4	
441…460 mm (17.36 ... 18.11 inch) Initial: 460 mm (18.11 inch)	2 5	
461…480 mm (18.15 ... 18.90 inch) Initial: 465 mm (18.30 inch)	2 6	
481…500 mm (18.94 ... 19.69 inch) Initial: 500 mm (19.69 inch)	2 7	

Selection and Ordering data	Article No.	Ord. Code
SITRANS TS500	**7MC751-**	
Tubular thermowell, low to medium stress, according to DIN 43722, Type 2G, screwed design, with extension	■ - ■■■■■ - ■■■■	■■■
501…550 mm (19.72 ... 21.65 inch) Initial: 510 mm (20.08 inch)	3 1	
551…600 mm (21.69 ... 23.62 inch) Initial: 600 mm (23.62 inch)	3 2	
601…650 mm (23.66 ... 25.59 inch) Initial: 650 mm (25.59 inch)	3 3	
651…700 mm (25.63 ... 27.56 inch) Initial: 700 mm (27.56 inch)	3 4	
701…750 mm (27.60 ... 29.53 inch) Initial: 750 mm (29.53 inch)	3 5	
751…800 mm (29.57 ... 31.50 inch) Initial: 800 mm (31.50 inch)	3 6	
801…850 mm (31.54 ... 33.46 inch) Initial: 850 mm (33.46 inch)	3 7	
851…900 mm (33.50 ... 35.43 inch) Initial: 900 mm (35.43 inch)	4 1	
901…950 mm (35.47 ... 37.40 inch) Initial: 950 mm (37.40 inch)	4 2	
951…1 000 mm (37.44 ... 39.37 inch) Initial: 1 000 mm (39.37 inch)	4 3	
1 001…1 100 mm (39.41 ... 43.31 inch) Initial: 1 100 mm (43.31 inch)	4 4	
1 101…1 200 mm (43.35 ... 47.24 inch) Initial: 1 200 mm (47.24 inch)	4 5	
1 201…1 300 mm (47.28 ... 51.18 inch) Initial: 1 300 mm (51.18 inch)	4 6	
1 301…1 400 mm (51.22 ... 55.12 inch) Initial: 1 400 mm (55.12 inch)	4 7	
1 401…1 500 mm (55.16 ... 59.05 inch) Initial: 1 500 mm (59.05 inch)	5 1	
Extension X		
Standard length for Type 2G DIN 43772 (X=129 mm (5.08 inch))	1	
Extension length X - customer specific		
enter customer specific length with Y45, see page 2/68 Order codes		
75 ...150 mm (2.95 ... 5.91 inch) Initial: 150 mm (5.91 inch)	9	N 1 D
151 ... 300 mm (5.95 ... 11.81 inch) Initial: 300 mm (11.81 inch)	9	N 2 D
301 ... 450 mm (11.85 ... 17.72 inch) Initial: 450 mm (17.72 inch)	9	N 3 D

Additional configurations on page after next page.

You find ordering examples on page 2/40.

© Siemens 2020

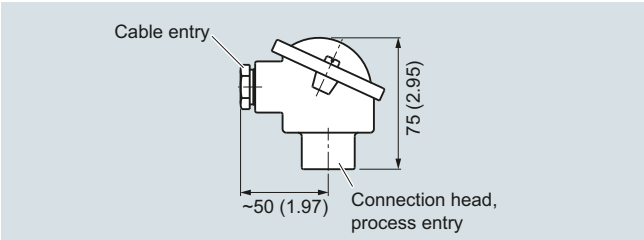

Connection head, aluminum, Type BA0, dimensions in mm (inch)

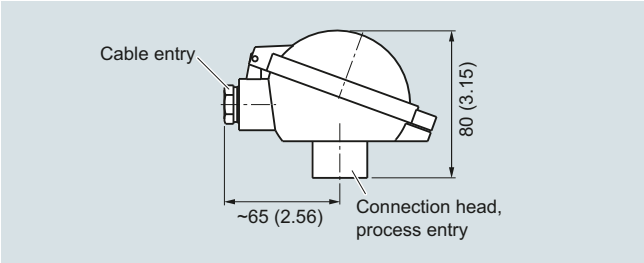

Connection head, aluminum, Type BB0, dimensions in mm (inch)

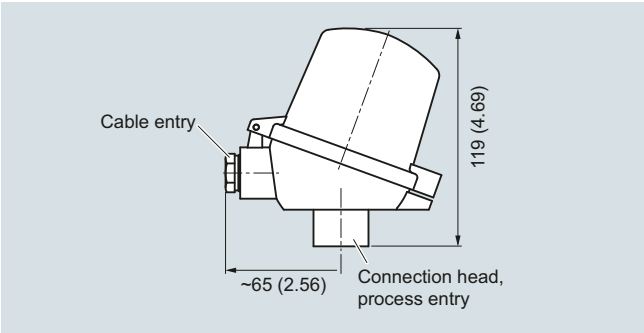

Connection head, aluminum, Type BC0, plastic, type BP0, dimensions in mm (inch)

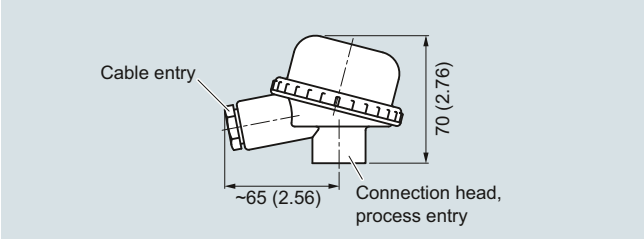

Connection head, plastic, Type BM0, dimensions in mm (inch)

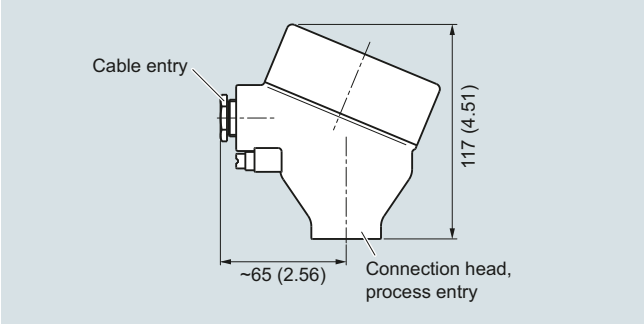

Connection head, aluminum, Type AG0, stainless steel, Type AU0, dimensions in mm (inch)

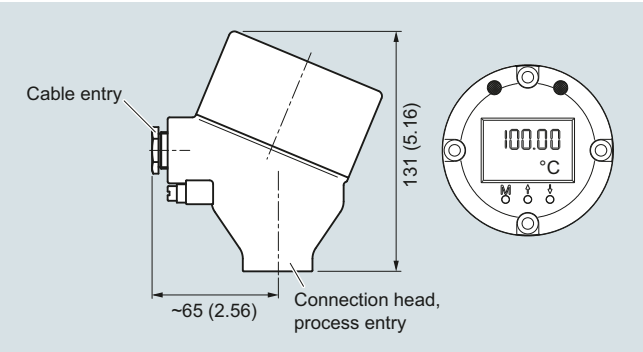

Connection head with 4-20 mA display, aluminum, Type AH0, stainless steel, Type AV0, dimensions in mm (inch)

© Siemens 2020

Type 2G, screwed design, with extension

Selection and Ordering data	Article No.	Ord. Code
SITRANS TS500 **Tubular thermowell, low to medium stress, according to DIN 43722, Type 2G, screwed design, with extension**	**7MC751-**	■ - ■■■■■ - ■■■■
Head		
Aluminum head, BA0, flange cover, Standard		**A**
Aluminum head, BB0, low hinged cover, screw connection		**B**
Aluminum head, BC0, high hinged cover, screw connection		**C**
Aluminum head, AG0, screw cover, suitable for Ex d[1]		**G**
Aluminum head, AH0, screw cover, suitable for Ex d, display[1]		**H**
Plastic head, BM0, screw cover		**M**
Plastic head, BP0high hinged cover, screw connection		**P**
Stainless steel head, AU0, screw cconnection typesver, suitable for Ex d[1]		**U**
Stainless steel head, AV0, screw cover, suitable for Ex d, display[1]		**V**
Sensor[2] Please note: The accuracy class range can be lower than the measuring range. For more information, see page 2/21		
Pt100, Basis, -50 ... +400 °C (-58 ... +752 °F)		**A**
Pt100, vibration resistant, -50 ... +400 °C (-58 ... +752 °F)		**B**
Pt100, expanded range, -196 ... +600 °C (-321 ... +1 112 °F)		**C**
Thermocouple Type K, -40 ... +1 000 °C (-40 ... +1 832 °F)		**K**
Thermocouple Type J, -40 ... +750 °C (-40 ... +1 382 °F)		**J**
Thermocouple Type N, -40 ... +1 000 °C (-40 ... +1 832 °F)		**N**
Sensor number/Accuracy Pt 100 connection: 1 x 4-wire connection or 2 x 3-wire connection, see "Measuring technology: connection types", page 2/23		
Single, basic accuracy (Class 2/Class B)		**1**
Single, increased accuracy (Class 1/Class A)		**2**
Single, highest accuracy (Class AA)		**3**
Double, basic accuracy (Class 2/Class B)		**5**
Double, increased accuracy (Class 1/Class A)		**6**
Double, highest accuracy (Class AA)		**7**

[1] Ex d in connection with Order code E03

Pt1000 versions are also available. To find these, please switch to Online Configuration in the PIA Life Cycle Portal: www.siemens.com/pia-portal

Selection and Ordering data	Order code
Further designs Add "**-Z**" to Article No. and specify Order code.	
Insertion length customer-specific Select range, enter desired length in plain text (No entry = standard length)	**Y44**
Extension X length customer-specific Select range, enter desired length in plain text (No entry = standard length)	**Y45**
Options Add "**-Z**" to Article No. and add options, separate extensions with "+".	
Built-in head transmitter Measuring range to be set must be specified with plain text data "Y01".	
SITRANS TH100, input 1 x Pt100, 4 ... 20 mA	**T12**
SITRANS TH320, input 1 x universal, 4 ... 20 mA	**T24**
SITRANS TH320, input 1 x universal, HART	**T34**
SITRANS TH420, input 2 x universal, HART	**T35**
SITRANS TH400, input 1 x universal, PA	**T40**
SITRANS TH400, input 1 x universal, PA, Ex	**T41**
SITRANS TH400, input 1 x universal, FF	**T45**
SITRANS TH400, input 1 x universal, FF, Ex	**T46**
Explosion protection	
Without explosion protection requirements (Europe, Australia, New Zealand)	**E00**
Intrinsic safety "i"/"IS[1] according to ATEX and IECEx (Europe, Australia, New Zealand)	**E01**
Flameproof enclosure "d"/"XP; dust protection through housing "t"/"DIP"[2] according to ATEX and IECEx (Europe, Australia, New Zealand)	**E03**
Non-sparking "ec" according to ATEX and IECEx (Europe, Australia, New Zealand)	**E04**
Without explosion protection requirements (USA, Canada) Basis FM	**E10**
Flameproof enclosure "d"/"XP; dust protection through housing "t"/"DIP"[2] according to cFMus (USA, Canada); other connections (M,G,R)	**E14**
Non-sparking "nA"/"NI" according to cFMus (USA, Canada)	**E16**
Without explosion protection requirements (USA, Canada), Basis CSA	**E17**
Intrinsic safety "i"/"IS"[1] according to cCSAus (USA, Canada)	**E18**
Flameproof enclosure "d"/"XP; dust protection through housing "t"/"DIP"[2] according to cCSAus (USA); other connections (M, G, R)	**E21**
Non-sparking "nA"/"NI" according to cCSAus (USA, Canada)	**E23**
Without explosion protection requirements (China)	**E54**
Intrinsic safety "i"/"IS"[1] according to NEPSI (China)	**E55**
Flameproof enclosure "d"; dust protection through housing "t"[2] according to NEPSI (China)	**E56**
Non-sparking "nA"/"NI" according to NEPSI (China)	**E57**
Without explosion protection requirements (EAC)	**E80**
Intrinsic safety "i"/"IS"[1] according to EACEx (EAC)	**E81**
Flameproof enclosure "d"/"XP; dust protection through housing "t"/"DIP"[2] according to EACEx (EAC)	**E82**
Non-sparking "nA"/"NI" according to EACEx (EAC)	**E83**
Marine approvals Det Norske Veritas Germanischer Lloyd (DNV GL)	**D01**

© Siemens 2020

Selection and Ordering data	Order code
Certificates and approvals	
EN 10204-3.1 Inspection certificate for materials coming into contact with media	**C12**
EN 10204-3.1 Inspection certificate for hydrostatic pressure test	**C31**
EN 10204-3.1 Inspection certificate for helium leak test	**C32**
EN 10204-3.1 Inspection certificate for dye-penetration-test	**C33**
EN 10204-3.1 Inspection certificate: visual, measurement and functional inspection	**C34**
EN 10204-2.1: Declaration of compliance with the order	**C35**
ISO 9001 grease-free (cleaned for e.g. oxygen applications)	**C51**
EN 10204-3.1 Acceptance test certificate "Positive Materials Identification" (PMI)	**On request**
Designation, calibration	
Stainless steel TAG plate , enter lettering in plain text	**Y15**
Plant calibration per 1 point, enter temperature in plain text	**Y33**
Transmitter options	
Transmitter, enter complete setting in plain text (Y01:+/-NNNN ... +/-NNNN C,F), marking on the device when Order code "Y15" is selected	**Y01**
Enter measuring point (max. 8 characters) in plain text	**Y17**
Transmitter, enter measuring point description (max. 16 characters) in plain text	**Y23**
Transmitter, enter measuring point text (max. 32 characters) in plain text	**Y24**
Transmitter, enter bus address in plain text	**Y25**
Transmitter, fail-safe value 3.6 mA (instead of 22.8 mA)	**U36**
SITRANS TH320/420 transmitter with SIL2/3 certificate	**C20**
Transmitter test protocol (5 points)	**C11**
Further options	
Connection form, flying leads (for the direct transmitter assembly, delivery without screws and springs)	**G01**
M12 device plug (in combination with transmitter, Non-Ex and intrinsically safe, max. IP65/67)	**G12**
Han 7D device plug (Non Ex and intrinsically safe, without mating connector max. IP65/67)	**G13**
Connection head with ½" NPT thread without cable gland, for AU0 and AH0 only IP66	**G20**
with outer earth screw for heads AG0, AH0, AU0 and AV0	**A02**
with inner earth screw for heads BC0, AG0, AH0, AU0 and AV0	**A03**
Option not found?	
Handling number special version	**Y99**

1) Please select Ex i version of the optional transmitter.

2) Only with connection heads code AG0, AH0, AU0, AV0, without cable gland (please select non-Ex version of the optional transmitter).

You find ordering examples on page 2/40.
Accessories, see page 2/251.

© Siemens 2020

Type 2F, with flange and extension

Dimensional drawings

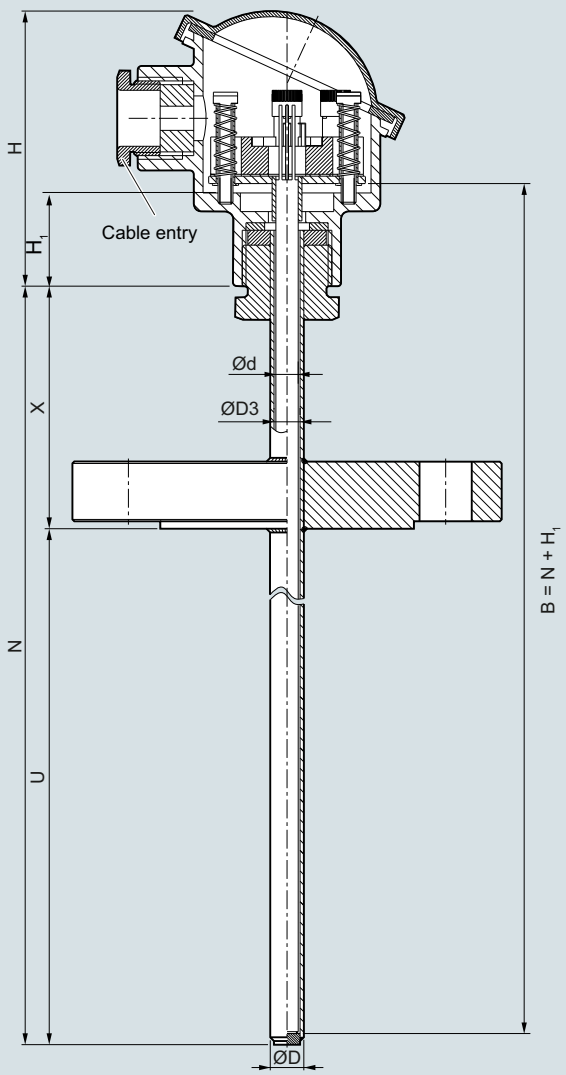

B	Measuring insert length
Ød	Measuring insert outer diameter (6 (0.24))
ØD	Process connection outer diameter
ØD3	Thermowell internal diameter
H	Head height
H_1	Type Axx = 41 (1.61) Type Bxx = 26 (1.02)
N	Nominal length
U	Insertion length
X	Extension length, floor strength 3 mm

SITRANS TS500, temperature sensors for vessels and pipes, tubular thermowell for low to medium stress, according to DIN 43772, type 2F, with flange, with extension, dimensions in mm (inch)

© Siemens 2020

Selection and Ordering data	Article No.	Ord. Code
SITRANS TS500 ↗	**7MC751-**	
Tubular thermowell, low to medium stress, according to DIN 43722, Type 2F, with flange, with extension	■ - ■■■■■ -	■■■■ ■■■
↗ Click on the Article No. for the online configuration in the PIA Life Cycle Portal.		
Material, in contact with media		
316Ti (1.4571)	1	
316L (1.4404 or 1.4435)	2	
Process connection		
Flange EN; DN 25 PN10 ... 40 B1	2 A	
Flange EN; DN 40 PN 40 B1	2 B	
Flange EN; DN 50 PN 40 B1	2 C	
Flange ASME; 1.0" RF 150	2 E	
Flange ASME; 1.0" RF 300	2 F	
Flange ASME; 1.5" RF 150	2 G	
Flange ASME; 1.5" RF 300	2 H	
Flange ASME; 2.0" RF 150	2 J	
Flange ASME; 2.0" RF 300	2 K	
Flange ASME; 1.0" RF 600	2 L	
Flange ASME; 1.5" RF 600	2 N	
Flange ASME; 1.5" RF 900	2 R	
Flange ASME; 2.0" RF 600	2 S	
Flange ASME; 2.0" RF 900	2 T	
Flange EN; DN 32 PN 40 B1	4 A	
Flange EN; DN 40 PN 100 B1	4 B	
Flange EN; DN 50 PN 16 B1	4 C	
Flange EN; DN 80 PN 16 B1	4 D	
Flange EN; DN 100 PN 16 B1	4 E	
Thermowell form		
2F, 9 mm (0.35 inch)	A	
2F, 12 mm (0.47 inch)	B	
Insertion U standard		
225 mm (8.86 inch)	1 1	
315 mm (12.40 inch)	1 5	
465 mm (18.31 inch)	2 6	
Insertion length U customer-specific		
enter customer specific length with Y44, see page 2/73 Order codes		
80 ... 100 mm (3.15 ... 3.94 inch) Initial: 100 mm (3.94 inch)	0 1	
101 ... 120 mm (3.98 ... 4.72 inch) Initial: 120 mm (4.72 inch)	0 2	
121 ... 140 mm (4.76 ... 5.51 inch) Initial: 140 mm (5.51 inch)	0 3	
141 ... 160 mm (5.55 ... 6.30 inch) Initial: 160 mm (6.30 inch)	0 4	
161 ... 180 mm (6.34 ... 7.09 inch) Initial: 180 mm (7.09 inch)	0 5	
181 ... 200 mm (7.13 ... 7.87 inch) Initial: 200 mm (7.87 inch)	0 6	
201 ... 220 mm (7.91 ... 8.66 inch) Initial: 220 mm (8.66 inch)	0 7	
221…240 mm (8.70 ... 9.45 inch) Initial: 225 mm (8.86 inch)	1 1	
241…260 mm (9.49 ... 10.24 inch) Initial: 250 mm (9.84 inch)	1 2	
261…280 mm (10.28 ...11.02 inch) Initial: 280 mm (11.02 inch)	1 3	
281…300 mm (11.06 ... 11.81 inch) Initial: 285 mm 11.22 inch)	1 4	
301…320 mm (11.85 ... 13.00 inch) Initial: 315 mm (12.40 inch)	1 5	
321…340 mm (12.64 ... 13.39 inch) Initial: 340 mm (13.39 inch)	1 6	

Selection and Ordering data	Article No.	Ord. Code
SITRANS TS500	**7MC751-**	
Tubular thermowell, low to medium stress, according to DIN 43722, Type 2F, with flange, with extension	■ - ■■■■■ -	■■■■ ■■■
341…360 mm (13.43 ... 14.17 inch) Initial: 360 mm (14.17 inch)	2 0	
361…380 mm (14.21 ... 14.96 inch) Initial: 380 mm (14.96 inch)	2 1	
381…400 mm (14.99 ... 15.75 inch) Initial: 400 mm (15.75 inch)	2 2	
401…420 mm (15.79 ... 16.54 inch) Initial: 420 mm (16.54 inch)	2 3	
421…440 mm (16.57 ... 17.32 inch) Initial: 440 mm (17.32 inch)	2 4	
441…460 mm (17.36 ... 18.11 inch) Initial: 460 mm (18.11 inch)	2 5	
461…480 mm (18.15 ... 18.90 inch) Initial: 465 mm (18.30 inch)	2 6	
481…500 mm (18.94 ... 19.69 inch) Initial: 500 mm (19.69 inch)	2 7	
501…550 mm (19.72 ... 21.65 inch) Initial: 510 mm (20.08 inch)	3 1	
551…600 mm (21.69 ... 23.62 inch) Initial: 600 mm (23.62 inch)	3 2	
601…650 mm (23.66 ... 25.59 inch) Initial: 650 mm (25.59 inch)	3 3	
651…700 mm (25.63 ... 27.56 inch) Initial: 700 mm (27.56 inch)	3 4	
701…750 mm (27.60 ... 29.53 inch) Initial: 750 mm (29.53 inch)	3 5	
751…800 mm (29.57 ... 31.50 inch) Initial: 800 mm (31.50 inch)	3 6	
801…850 mm (31.54 ... 33.46 inch) Initial: 850 mm (33.46 inch)	3 7	
851…900 mm (33.50 ... 35.43 inch) Initial: 900 mm (35.43 inch)	4 1	
901…950 mm (35.47 ... 37.40 inch) Initial: 950 mm (37.40 inch)	4 2	
951…1 000 mm (37.44 ... 39.37 inch) Initial: 1 000 mm (39.37 inch)	4 3	
1 001…1 100 mm (39.41 ... 43.31 inch) Initial: 1 100 mm (43.31 inch)	4 4	
1 101…1 200 mm (43.35 ... 47.24 inch) Initial: 1 200 mm (47.24 inch)	4 5	
1 201…1 300 mm (47.28 ... 51.18 inch) Initial: 1 300 mm (51.18 inch)	4 6	
1 301…1 400 mm (51.22 ... 55.12 inch) Initial: 1 400 mm (55.12 inch)	4 7	
1 401…1 500 mm (55.16 ... 59.05 inch) Initial: 1 500 mm (59.05 inch)	5 1	
Extension X		
Standard length for Type 2F DIN 43772 (X=64 mm (2.52 inch))	1	
Extension length X - customer specific		
enter customer specific length with Y45, see page 2/73 Order codes		
75 ...150 mm (2.95 ... 5.91 inch) Initial: 150 mm (5.91 inch)	9	N 1 D
151 ... 300 mm (5.95 ... 11.81 inch) Initial: 300 mm (11.81 inch)	9	N 2 D
301 ... 450 mm (11.85 ... 17.72 inch) Initial: 450 mm (17.72 inch)	9	N 3 D

Additional configurations on page after next page!

You find ordering examples on page 2/40!

© Siemens 2020

Type 2F, with flange and extension

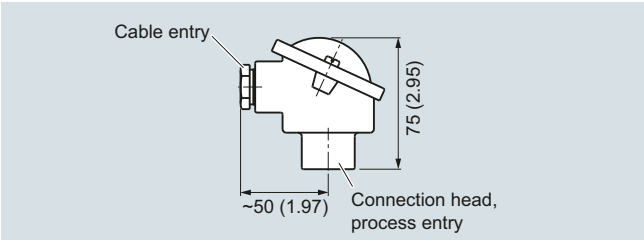

Connection head, aluminum, Type BA0, dimensions in mm (inch)

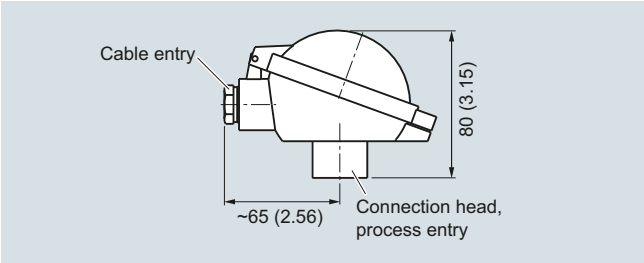

Connection head, aluminum, Type BB0, dimensions in mm (inch)

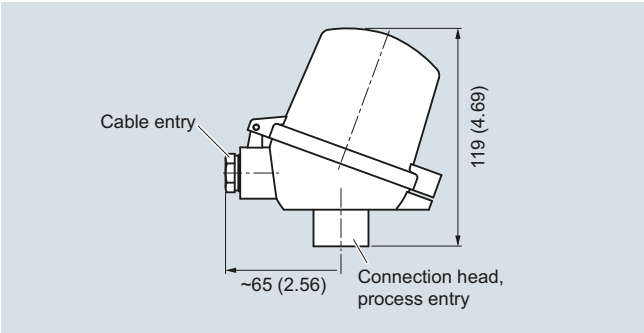

Connection head, aluminum, Type BC0, plastic, type BP0, dimensions in mm (inch)

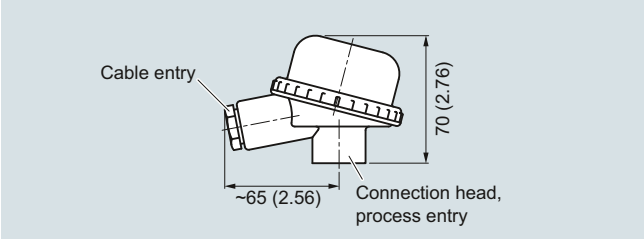

Connection head, plastic, Type BM0, dimensions in mm (inch)

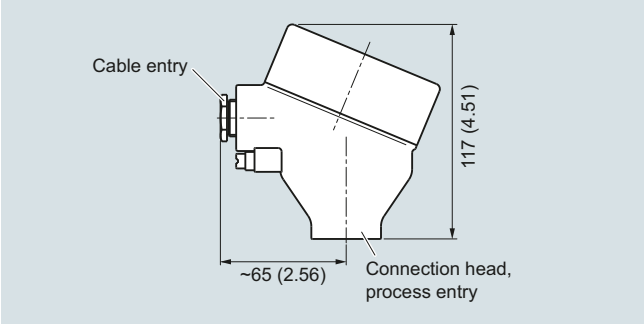

Connection head, aluminum, Type AG0, stainless steel, Type AU0, dimensions in mm (inch)

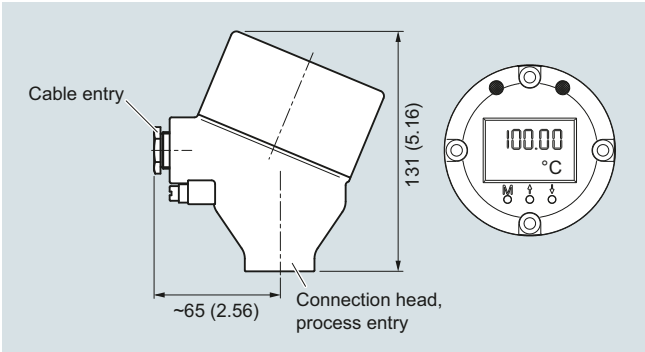

Connection head with 4-20 mA display, aluminum, Type AH0, stainless steel, Type AV0, dimensions in mm (inch)

© Siemens 2020

Selection and Ordering data	Article No.
SITRANS TS500	**7MC751-**
Tubular thermowell, low to medium stress, according to DIN 43722, Type 2F, with flange, with extension	■ - ■■■■■ - ■■■■ ■■■
Head	
Aluminum head, BA0, flange cover, Standard	A
Aluminum head, BB0, low hinged cover, screw connection	B
Aluminum head, BC0, high hinged cover, screw connection	C
Aluminum head, AG0, screw cover, suitable for Ex d[1]	G
Aluminum head, AH0, screw cover, suitable for Ex d, display[1]	H
Plastic head, BM0, screw cover	M
Plastic head, BP0high hinged cover, screw connection	P
Stainless steel head, AU0, screw cover, suitable for Ex d[1]	U
Stainless steel head, AV0, screw cover, suitable for Ex d, display[1]	V
Sensor[2]	
Please note: The accuracy class range can be lower than the measuring range. For more information, see page 2/21	
Pt100, Basis, -50 ... +400 °C (-58 ... +752 °F)	A
Pt100, vibration resistant, -50 ... +400 °C (-58 ... +752 °F)	B
Pt100, expanded range, -196 ... +600 °C (-321 ... +1 112 °F)	C
Thermocouple Type K, -40 ... +1 000 °C (-40 ... +1 832 °F)	K
Thermocouple Type J, -40 ... +750 °C (-40 ... +1 382 °F)	J
Thermocouple Type N, -40 ... +1 000 °C (-40 ... +1 832 °F)	N
Sensor number/Accuracy	
Pt 100 connection: 1 x 4-wire connection or 2 x 3-wire connection, see "Measuring technology: connection types", page 2/23	
Single, basic accuracy (Class 2/Class B)	1
Single, increased accuracy (Class 1/Class A)	2
Single, highest accuracy (Class AA)	3
Double, basic accuracy (Class 2/Class B)	5
Double, increased accuracy (Class 1/Class A)	6
Double, highest accuracy (Class AA)	7

1) Ex d in connection with Order code E03

2) Pt1000 versions are also available. To find these, please switch to Online Configuration in the PIA Life Cycle Portal: www.siemens.com/pia-portal

Selection and Ordering data	Order code
Further designs	
Add "**-Z**" to Article No. and specify Order code.	
Insertionlength customer-specific Select range, enter desired length in plain text (No entry = standard length)	**Y44**
Extension X length customer-specific Select range, enter desired length in plain text (No entry = standard length)	**Y45**
Options	
Add "**-Z**" to Article No. and add options, separate extensions with "+".	
Built-in head transmitter Measuring range to be set must be specified with plain text data "Y01".	
SITRANS TH100, input 1 x Pt100, 4 ... 20 mA	**T12**
SITRANS TH320, input 1 x universal, 4 ... 20 mA	**T24**
SITRANS TH320, input 1 x universal, HART	**T34**
SITRANS TH420, input 2 x universal, HART	**T35**
SITRANS TH400, input 1 x universal, PA	**T40**
SITRANS TH400, input 1 x universal, PA, Ex	**T41**
SITRANS TH400, input 1 x universal, FF	**T45**
SITRANS TH400, input 1 x universal, FF, Ex	**T46**
Explosion protection	
Without explosion protection requirements (Europe, Australia, New Zealand)	**E00**
Intrinsic safety "i"/"IS[1] according to ATEX and IECEx (Europe, Australia, New Zealand)	**E01**
Flameproof enclosure "d"/"XP; dust protection through housing "t"/"DIP"[2] according to ATEX and IECEx (Europe, Australia, New Zealand)	**E03**
Non-sparking "ec" according to ATEX and IECEx (Europe, Australia, New Zealand)	**E04**
Without explosion protection requirements (USA, Canada) Basis FM	**E10**
Flameproof enclosure "d"/"XP; dust protection through housing "t"/"DIP"[2] according to cFMus (USA, Canada); other connections (M,G,R)	**E14**
Non-sparking "nA"/"NI" according to cFMus (USA,Canada)	**E16**
Without explosion protection requirements (USA, Canada), Basis CSA	**E17**
Intrinsic safety "i"/"IS"[1] according to cCSAus (USA, Canada)	**E18**
Flameproof enclosure "d"/"XP; dust protection through housing "t"/"DIP"[2] according to cCSAus (USA); other connections (M, G, R)	**E21**
Non-sparking "nA"/"NI" according to cCSAus (USA, Canada)	**E23**
Without explosion protection requirements (China)	**E54**
Intrinsic safety "i"/"IS"[1] according to NEPSI (China)	**E55**
Flameproof enclosure "d"; dust protection through housing "t"[2] according to NEPSI (China)	**E56**
Non-sparking "nA"/"NI" according to NEPSI (China)	**E57**
Without explosion protection requirements (EAC)	**E80**
Intrinsic safety "i"/"IS"[1] according to EACEx (EAC)	**E81**
Flameproof enclosure "d"/"XP; dust protection through housing "t"/"DIP"[2] according to EACEx (EAC)	**E82**
Non-sparking "nA"/"NI" according to EACEx (EAC)	**E83**
Marine approvals	
Det Norske Veritas Germanischer Lloyd (DNV GL)	**D01**

© Siemens 2020

Type 2F, with flange and extension

Selection and Ordering data	Order code
Certificates and approvals	
EN 10204-3.1 Inspection certificate for materials coming into contact with media	**C12**
EN 10204-3.1 Inspection certificate for hydrostatic pressure test	**C31**
EN 10204-3.1 Inspection certificate for helium leak test	**C32**
EN 10204-3.1 Inspection certificate for dye-penetration-test	**C33**
EN 10204-3.1 Inspection certificate: visual, measurement and functional inspection	**C34**
EN 10204-2.1: Declaration of compliance with the order	**C35**
ISO 9001 grease-free (cleaned for e.g. oxygen applications)	**C51**
EN 10204-3.1 Acceptance test certificate "Positive Materials Identification" (PMI)	**On request**
Designation, calibration	
Stainless steel TAG plate , enter lettering in plain text	**Y15**
Plant calibration per 1 point, enter temperature in plain text	**Y33**
Transmitter options	
Transmitter, enter complete setting in plain text (Y01:+/-NNNN ... +/-NNNN C,F), marking on the device when Order code "Y15" is selected	**Y01**
Enter measuring point (max. 8 characters) in plain text	**Y17**
Transmitter, enter measuring point description (max. 16 characters) in plain text	**Y23**
Transmitter, enter measuring point text (max. 32 characters) in plain text	**Y24**
Transmitter, enter bus address in plain text	**Y25**
Transmitter, fail-safe value 3.6 mA (instead of 22.8 mA)	**U36**
SITRANS TH320/420 transmitter with SIL2/3 certificate	**C20**
Transmitter test protocol (5 points)	**C11**
Further options	
Connection form, flying leads (for the direct transmitter assembly, delivery without screws and springs)	**G01**
M12 device plug (in combination with transmitter, Non-Ex and intrinsically safe, max. IP65/67)	**G12**
Han 7D device plug (Non Ex and intrinsically safe, without mating connector max. IP65/67)	**G13**
Connection head with ½" NPT thread without cable gland, for AU0 and AH0 only IP66	**G20**
with outer earth screw for heads AG0, AH0, AU0 and AV0	**A02**
with inner earth screw for heads BC0, AG0, AH0, AU0 and AV0	**A03**
Option not found?	
Handling number special version	**Y99**

1) Please select Ex i version of the optional transmitter.

2) Only with connection heads code AG0, AH0, AU0, AV0, without cable gland (please select non-Ex version of the optional transmitter).

You find ordering examples on page 2/40.
Accessories, see page 2/251.

© Siemens 2020

Dimensional drawings

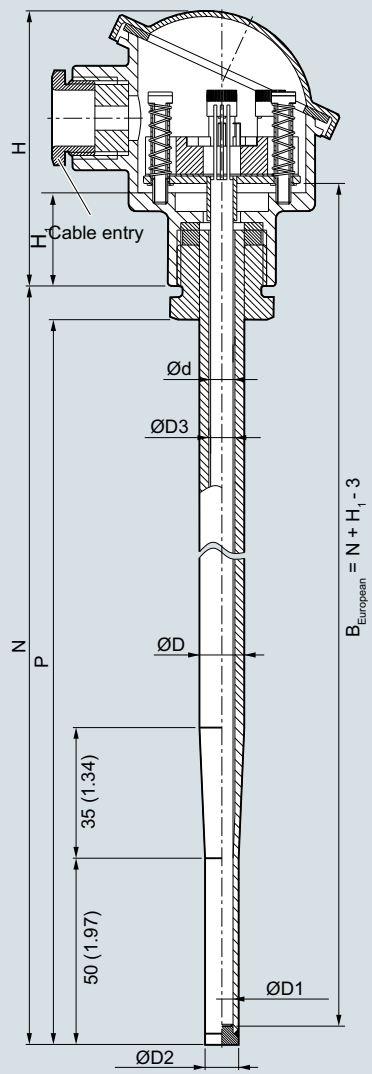

B	Measuring insert length
Ød	Measuring insert outer diameter (6 (0.24))
ØD	Process connection outer diameter
ØD1	Tip internal diameter
ØD2	Tip outer diameter
ØD3	Thermowell internal diameter
H	Head height
H_1	Type Axx> 41 (1.61) Type Bxx> 26 (1.02)
N	Nominal length
P	Space for process connection, floor strength 6 mm

SITRANS TS500, temperature sensors for vessels and pipes, tubular thermowell for low to medium stress, without process connection, without extension, plug-in or for use with sliding compression joints, dimensions in mm (inch)

© Siemens 2020

Type 3, fast response, without process connection

Selection and Ordering data	Article No.
SITRANS TS500 ↗	**7MC751-**
Tubular thermowell for low to medium stress, according to DIN 43722, Type 3, without process connection, improved response time, plug-in or use with moveable compression fittings	■ - ■■■■■ - ■■■■
↗ Click on the Article No. for the online configuration in the PIA Life Cycle Portal.	
Material, in contact with media	
316Ti (1.4571)	1
316L (1.4404 or 1.4435)	2
Process connection	
Without process connection (for compression joints) N=U	0 N
Thermowell form	
3, 12/9 mm (0.47/0.35 inch)	K
Insertion length U (=N), Standard	
160 mm (6.3 inch)	0 4
220 mm (8.66 inch)	0 7
280 mm (11.02 inch)	1 3
Insertion length U (=N), customer-specific enter customer specific length with Y44, see page 2/78 Order codes	
121 ... 140 mm (4.76 ... 5.51 inch) Initial: 140 mm (5.51 inch)	0 3
141 ... 160 mm (5.55 ... 6.30 inch) Initial: 160 mm (6.3 inch)	0 4
161 ... 180 mm (6.34 ... 7.09 inch) Initial: 180 mm (7.09 inch)	0 5
181 ... 200 mm (7.13 ... 7.87 inch) Initial: 200 mm (7.87 inch)	0 6
201 ... 220 mm (7.91 ... 8.66 inch) Initial: 220 mm (8.66 inch)	0 7
221 ... 240 mm (8.7 ... 9.45 inch) Initial: 225 mm (8.86 inch)	1 1
241 ... 260 mm (9.48 ... 10.24 inch) Initial: 250 mm (9.84 inch)	1 2
261 ... 280 mm (10.28 ... 11.02 inch) Initial: 280 mm (11.02 inch)	1 3
281 ... 300 mm (11.02 ... 11.81 inch) Initial: 285 mm (11.22 inch)	1 4
301 ... 320 mm (11.85 ... 12.6 inch) Initial: 315 mm (12.4 inch)	1 5
321 ... 340 mm (12.64 ... 13.39 inch) Initial: 340 mm (13.39 inch)	1 6
341 ... 360 mm (13.43 ... 14.17 inch) Initial: 360 mm (14.17 inch)	2 0
361 ... 380 mm (14.21 ... 14.96 inch) Initial: 380 mm (14.96 inch)	2 1

Selection and Ordering data	Article No.
SITRANS TS500	**7MC751-**
Tubular thermowell for low to medium stress, according to DIN 43722, Type 3, without process connection, improved response time, plug-in or use with moveable compression fittings	■ - ■■■■■ - ■■■■
381 ... 400 mm (15 ... 15.75 inch) Initial: 400 mm (15.75 inch)	2 2
401 ... 420 mm (15.79 ... 16.54 inch) Initial: 420 mm (16.54 inch)	2 3
421 ... 440 mm (16.57 ... 17.32 inch) Initial: 440 mm (17.32 inch)	2 4
441 ... 460 mm (17.36 ... 18.11 inch) Initial: 460 mm (18.11 inch)	2 5
461 ... 480 mm (18.15 ... 18.90 inch) Initial: 465 mm (18.30 inch)	2 6
481 ... 500 mm (18.94 ... 19.68 inch) Initial: 500 mm (19.68 inch)	2 7
501 ... 550 mm (19.72 ... 21.65 inch) Initial: 510 mm (20.08 inch)	3 1
551 ... 600 mm (21.69 ... 23.62 inch) Initial: 600 mm (23.62 inch)	3 2
601 ... 650 mm (23.66 ... 25.59 inch) Initial: 650 mm (25.59 inch)	3 3
651 ... 700 mm (25.63 ... 27.56 inch) Initial: 700 mm (27.56 inch)	3 4
701 ... 750 mm (27.6 ... 29.53 inch) Initial: 750 mm (29.53 inch)	3 5
751 ... 800 mm (29.57 ... 31.50 inch) Initial: 800 mm (31.50 inch)	3 6
801 ... 850 mm (31.53 ... 33.46 inch) Initial: 850 mm (33.46 inch)	3 7
851 ... 900 mm (33.50 ... 35.43 inch) Initial: 900 mm (35.43 inch)	4 1
901 ... 950 mm (35.47 ... 37.40 inch) Initial: 950 mm (37.40 inch)	4 2
951 ... 1 000 mm (37.44 ... 39.37 inch) Initial: 1 000 mm (39.37 inch)	4 3
1 001 ... 1 100 mm (39.41 ... 43.31 inch) Initial: 1 100 mm (43.31 inch)	4 4
Extension	
Standard length for Type 2 as per DIN 43722 (without extension N=U)	0

Additional configurations on page after next page!

You find ordering examples on page 2/40!

© Siemens 2020

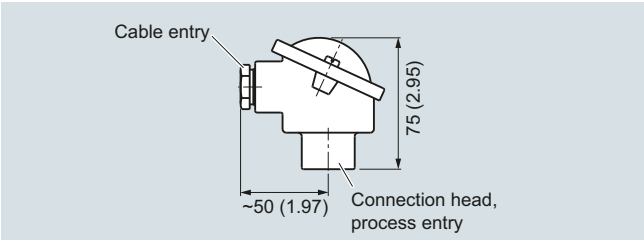

Connection head, aluminum, Type BA0, dimensions in mm (inch)

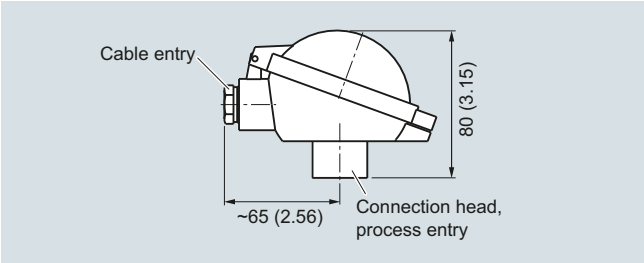

Connection head, aluminum, Type BB0, dimensions in mm (inch)

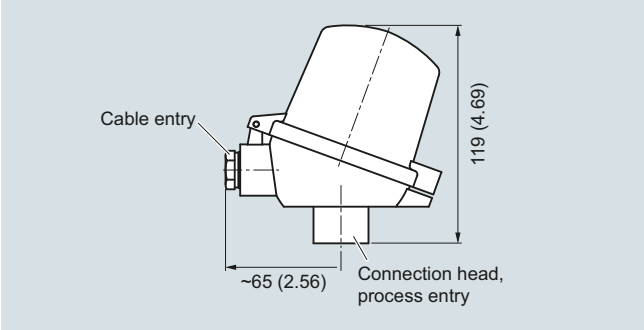

Connection head, aluminum, Type BC0, plastic, type BP0, dimensions in mm (inch)

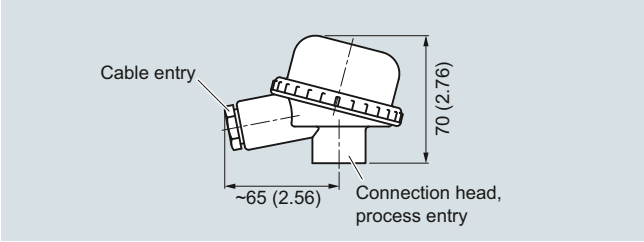

Connection head, plastic, Type BM0, dimensions in mm (inch)

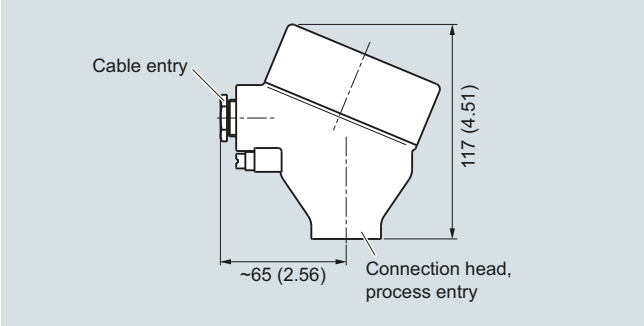

Connection head, aluminum, Type AG0, stainless steel, Type AU0, dimensions in mm (inch)

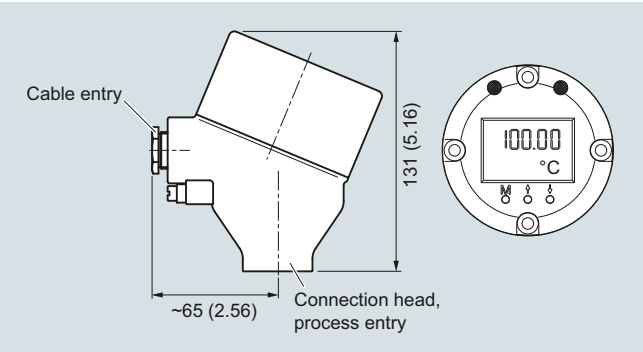

Connection head with 4-20 mA display, aluminum, Type AH0, stainless steel, Type AV0, dimensions in mm (inch)

© Siemens 2020

Type 3, fast response, without process connection

2

Selection and Ordering data	Article No.
SITRANS TS500	**7MC751-**
Tubular thermowell for low to medium stress, according to DIN 43722, Type 3, without process connection, improved response time, plug-in or use with moveable compression fittings	■ - ■■■■■ - ■■■■
Head	
Aluminum head, BA0, flange cover, Standard	A
Aluminum head, BB0, low hinged cover, screw connection	B
Aluminum head, BC0, high hinged cover, screw connection	C
Aluminum head, AG0, screw cover, suitable for Ex d[1]	G
Aluminum head, AH0, screw cover, suitable for Ex d, display[1]	H
Plastic head, BM0, screw cover	M
Plastic head, BP0high hinged cover, screw connection	P
Stainless steel head, AU0, screw cover, Ex d[1]	U
Stainless steel head, AV0, screw cover, suitable for Ex d, display[1]	V
Sensor[2]	
Please note: The accuracy class range can be lower than the measuring range. For more information, see page 2/21	
Pt100, basis, -50 ... +400 °C (-58 ... +752 °F)	A
Pt100, vibration-resistant, -50 ... +400 °C (-58 ... +752 °F)	B
Pt100, expanded range, -196 ... +600 °C (-321 ... +1 112 °F)	C
Thermocouple Type J, -40 ... +750 °C (-40 ... +1 382 °F)	J
Thermocouple Type K, -40 .. . +1 000 °C (-40 ... +1 832 °F)	K
Thermocouple Type N, -40 ... +1 000 °C (-40 ... +1 832 °F)	N
Sensor number/Accuracy	
Pt 100 connection: 1 x 4-wire connection or 2 x 3-wire connection, see "Measuring technology: connection types", page 2/23	
Single, basic accuracy (Class 2/Class B)	1
Single, increased accuracy (Class 1/Class A)	2
Single, highest accuracy (Class AA)	3
Double, basic accuracy (Class 2/Class B)	5
Double, increased accuracy (Class 1/Class A)	6
Double, highest accuracy (Class AA)	7

[1] Ex d in connection with Order code E03

[2] Pt1000 versions are also available. To find these, please switch to Online Configuration in the PIA Life Cycle Portal: www.siemens.com/pia-portal

Selection and Ordering data	Order code
Further designs	
Add "**-Z**" to Article No. and specify Order code.	
Insertion length customer-specific Select range, enter desired length in plain text (No entry = standard length)	**Y44**
Options	
Add "**-Z**" to Article No. and add options, separate extensions with "+".	
Built-in head transmitter Measuring range to be set must be specified with plain text data "Y01".	
SITRANS TH100, input 1 x Pt100, 4 ... 20 mA	**T12**
SITRANS TH320, input 1 x universal, 4 ... 20 mA	**T24**
SITRANS TH320, input 1 x universal, HART	**T34**
SITRANS TH420, input 2 x universal, HART	**T35**
SITRANS TH400, input 1 x universal, PA	**T40**
SITRANS TH400, input 1 x universal, PA, Ex	**T41**
SITRANS TH400, input 1 x universal, FF	**T45**
SITRANS TH400, input 1 x universal, FF, Ex	**T46**
Explosion protection	
Without explosion protection requirements (Europe, Australia, New Zealand)	**E00**
Intrinsic safety "i"/"IS[1] according to ATEX and IECEx (Europe, Australia, New Zealand)	**E01**
Flameproof enclosure "d"/"XP; dust protection through housing "t"/"DIP"[2] according to ATEX and IECEx (Europe, Australia, New Zealand)	**E03**
Non-sparking "ec" according to ATEX and IECEx (Europe, Australia, New Zealand)	**E04**
Without explosion protection requirements (USA, Canada) Basis FM	**E10**
Flameproof enclosure "d"/"XP; dust protection through housing "t"/"DIP"[2] according to cFMus (USA, Canada); other connections (M,G,R)	**E14**
Non-sparking "nA"/"NI" according to cFMus (USA, Canada)	**E16**
Without explosion protection requirements (USA, Canada), Basis CSA	**E17**
Intrinsic safety "i"/"IS"[1] according to cCSAus (USA, Canada)	**E18**
Flameproof enclosure "d"/"XP; dust protection through housing "t"/"DIP"[2] according to cCSAus (USA); other connections (M, G, R)	**E21**
Non-sparking "nA"/"NI" according to cCSAus (USA, Canada)	**E23**
Without explosion protection requirements (China)	**E54**
Intrinsic safety "i"/"IS"[1] according to NEPSI (China)	**E55**
Flameproof enclosure "d"; dust protection through housing "t"[2] according to NEPSI (China)	**E56**
Non-sparking "nA"/"NI" according to NEPSI (China)	**E57**
Without explosion protection requirements (EAC)	**E80**
Intrinsic safety "i"/"IS"[1] according to EACEx (EAC)	**E81**
Flameproof enclosure "d"/"XP; dust protection through housing "t"/"DIP"[2] according to EACEx (EAC)	**E82**
Non-sparking "nA"/"NI" according to EACEx (EAC)	**E83**
Marine approvals	
Det Norske Veritas Germanischer Lloyd (DNV GL)	**D01**

© Siemens 2020

Selection and Ordering data	Order code
Certificates and approvals	
EN 10204-3.1 Inspection certificate for materials coming into contact with media	**C12**
EN 10204-3.1 Inspection certificate for hydrostatic pressure test	**C31**
EN 10204-3.1 Inspection certificate for helium leak test	**C32**
EN 10204-3.1 Inspection certificate for dye-penetration-test	**C33**
EN 10204-3.1 Inspection certificate: visual, measurement and functional inspection	**C34**
EN 10204-2.1: Declaration of compliance with the order	**C35**
ISO 9001 grease-free (cleaned for e.g. oxygen applications)	**C51**
EN 10204-3.1 Acceptance test certificate "Positive Materials Identification" (PMI)	**On request**
Designation, calibration	
Stainless steel TAG plate , enter lettering in plain text	**Y15**
Plant calibration per 1 point, enter temperature in plain text	**Y33**
Transmitter options	
Transmitter, enter complete setting in plain text (Y01:+/-NNNN ... +/-NNNN C,F), marking on the device when Order code "Y15" is selected	**Y01**
Enter measuring point (max. 8 characters) in plain text	**Y17**
Transmitter, enter measuring point description (max. 16 characters) in plain text	**Y23**
Transmitter, enter measuring point text (max. 32 characters) in plain text	**Y24**
Transmitter, enter bus address in plain text	**Y25**
Transmitter, fail-safe value 3.6 mA (instead of 22.8 mA)	**U36**
SITRANS TH320/420 transmitter with SIL2/3 certificate	**C20**
Transmitter test protocol (5 points)	**C11**
Further options	
Connection form, flying leads (for the direct transmitter assembly, delivery without screws and springs)	**G01**
M12 device plug (in combination with transmitter, Non-Ex and intrinsically safe, max. IP65/67)	**G12**
Han 7D device plug (Non Ex and intrinsically safe, without mating connector max. IP65/67)	**G13**
Connection head with ½" NPT thread without cable gland, for AU0 and AH0 only IP66	**G20**
with outer earth screw for heads AG0, AH0, AU0 and AV0	**A02**
with inner earth screw for heads BC0, AG0, AH0, AU0 and AV0	**A03**
Compression joint G½", enclosed	**A31**
Compression joint NPT½", enclosed	**A32**
Option not found?	
Handling number special version	**Y99**

1) Please select Ex i version of the optional transmitter.

2) Only with connection heads code AG0, AH0, AU0, AV0, without cable gland (please select non-Ex version of the optional transmitter).

You find ordering examples on page 2/40.
Accessories, see page 2/251.

© Siemens 2020

Type 3G, fast response, screwed design, with extension

Dimensional drawings

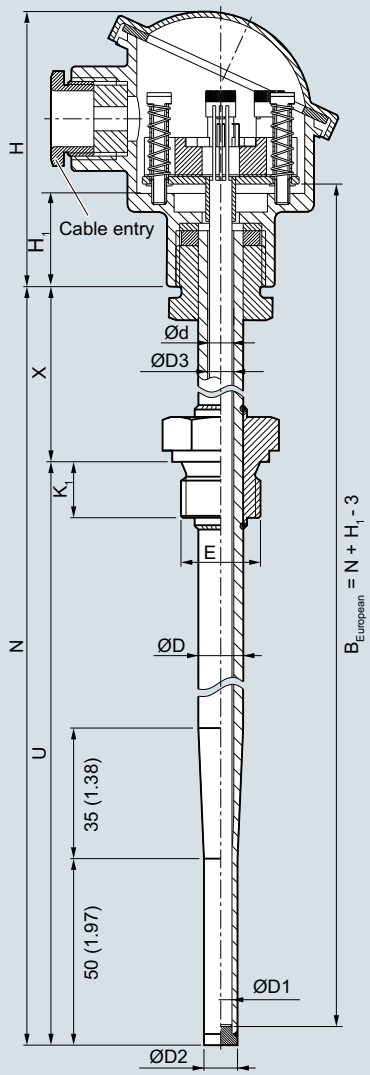

B	Measuring insert length
Ød	Measuring insert outer diameter (6 (0.24))
ØD	Process connection outer diameter
ØD1	Tip internal diameter
ØD2	Tip outer diameter
ØD3	Thermowell internal diameter
E	Process connection, thread size
H	Head height
H_1	Type Axx = 41 (1.61) Type Bxx = 26 (1.02)
K_1	Screw depth
N	Nominal length
U	Insertion length
X	Extension length, floor strength 6 mm

SITRANS TS500, temperature sensors for vessels and pipes, tubular thermowell for low to medium stress, according to DIN 43772, type 3G, screwed design, without process connection, with extension, for screw-in depth dimensions, see page 2/15, dimensions in mm (inch).

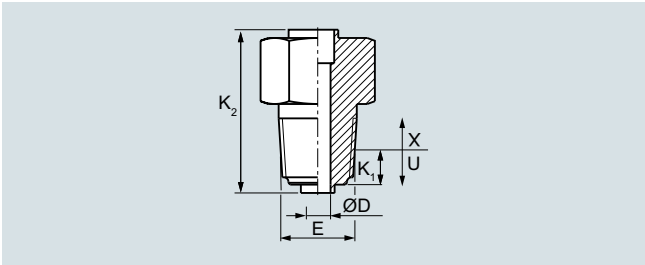

Process connection conical, dimensions in mm (inch)

© Siemens 2020

Type 3G, fast response, screwed design, with extension

Selection and Ordering data	Article No.	Ord. Code
SITRANS TS500 ↗	**7MC751-**	
Tubular thermowell, low to medium stress, according to DIN 43722, Type 3G, screwed design, with extension	■ - ■■■■■ -	■■■■ ■■■
↗ Click on the Article No. for the online configuration in the PIA Life Cycle Portal.		
Material, in contact with media		
316Ti (1.4571)	1	
316L (1.4404 or 1.4435)	2	
Process connection		
Cylindrical: G½" (½" BSPP)	1 C	
Cylindrical: G¾" (¾" BSPP)	1 D	
Tapered: NPT½"	1 J	
Tapered: NPT¾"	1 K	
Tapered: NPT1"	1 L	
Cylindrical: M20 x 1.5	1 V	
Cylindrical: M27 x 2.0	1 W	
Cylindrical: M33 x 2.0	1 Y	
Thermowell form		
3G, 12/9 mm (0.47/0.35 inch)	K	
Insertion length U standard		
160 mm (6.30 inch)	0 4	
220 mm (8.66 inch)	0 7	
280 mm (11.02 inch)	1 3	
Insertion length U customer-specific		
enter customer specific length with Y44, see page 2/83 Order codes		
121 ... 140 mm (4.76 ... 5.51 inch) Initial: 140 mm (5.51 inch)	0 3	
141 ... 160 mm (5.55 ... 6.30 inch) Initial: 160 mm (6.30 inch)	0 4	
161 ... 180 mm (6.34 ... 7.09 inch) Initial: 180 mm (7.09 inch)	0 5	
181 ... 200 mm (7.13 ... 7.87 inch) Initial: 200 mm (7.87 inch)	0 6	
201 ... 220 mm (7.91 ... 8.66 inch) Initial: 220 mm (8.66 inch)	0 7	
221…240 mm (8.70 ... 9.45 inch) Initial: 225 mm (8.86 inch)	1 1	
241…260 mm (9.49 ... 10.24 inch) Initial: 250 mm (9.84 inch)	1 2	
261…280 mm (10.28 ...11.02 inch) Initial: 280 mm (11.02 inch)	1 3	
281…300 mm (11.06 ... 11.81 inch) Initial: 285 mm 11.22 inch)	1 4	
301…320 mm (11.85 ... 13.00 inch) Initial: 315 mm (12.40 inch)	1 5	
321…340 mm (12.64 ... 13.39 inch) Initial: 340 mm (13.39 inch)	1 6	
341…360 mm (13.43 ... 14.17 inch) Initial: 360 mm (14.17 inch)	2 0	
361…380 mm (14.21 ... 14.96 inch) Initial: 380 mm (14.96 inch)	2 1	
381…400 mm (14.99 ... 15.75 inch) Initial: 400 mm (15.75 inch)	2 2	
401…420 mm (15.79 ... 16.54 inch) Initial: 420 mm (16.54 inch)	2 3	
421…440 mm (16.57 ... 17.32 inch) Initial: 440 mm (17.32 inch)	2 4	
441…460 mm (17.36 ... 18.11 inch) Initial: 460 mm (18.11 inch)	2 5	
461…480 mm (18.15 ... 18.90 inch) Initial: 465 mm (18.30 inch)	2 6	
481…500 mm (18.94 ... 19.69 inch) Initial: 500 mm (19.69 inch)	2 7	

Selection and Ordering data	Article No.	Ord. Code
SITRANS TS500	**7MC751-**	
Tubular thermowell, low to medium stress, according to DIN 43722, Type 3G, screwed design, with extension	■ - ■■■■■ -	■■■■ ■■■
501 ... 550 mm (19.72 ... 21.65 inch) Initial: 510 mm (20.08 inch)	3 1	
551 ... 600 mm (21.69 ... 23.62 inch) Initial: 600 mm (23.62 inch)	3 2	
601 ... 650 mm (23.66 ... 25.59 inch) Initial: 650 mm (25.59 inch)	3 3	
651 ... 700 mm (25.63 ... 27.56 inch) Initial: 700 mm (27.56 inch)	3 4	
701 ... 750 mm (27.6 ... 29.53 inch) Initial: 750 mm (29.53 inch)	3 5	
751 ... 800 mm (29.57 ... 31.50 inch) Initial: 800 mm (31.50 inch)	3 6	
801 ... 850 mm (31.53 ... 33.46 inch) Initial: 850 mm (33.46 inch)	3 7	
851 ... 900 mm (33.50 ... 35.43 inch) Initial: 900 mm (35.43 inch)	4 1	
901 ... 950 mm (35.47 ... 37.40 inch) Initial: 950 mm (37.40 inch)	4 2	
951 ... 1 000 mm (37.44 ... 39.37 inch) Initial: 1 000 mm (39.37 inch)	4 3	
Extension X		
Standard length for Type 2G DIN 43772 (X=131 mm (5.08 inch))	1	
Extension length - customer specific		
enter customer specific length with Y45, see page 2/83 Order codes		
75 ...150 mm (2.95 ... 5.91 inch) Initial: 150 mm (5.91 inch)	9	N 1 D
151 ... 300 mm (5.95 ... 11.81 inch) Initial: 300 mm (11.81 inch)	9	N 2 D

Additional configurations on page after next page!

You find ordering examples on page 2/40!

© Siemens 2020

Type 3G, fast response, screwed design, with extension

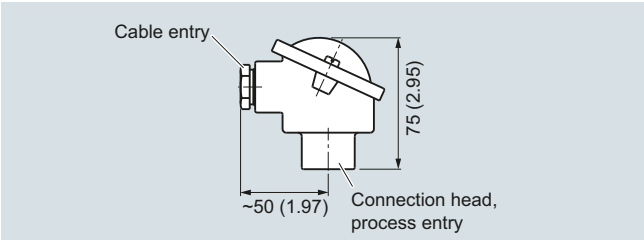

Connection head, aluminum, Type BA0, dimensions in mm (inch)

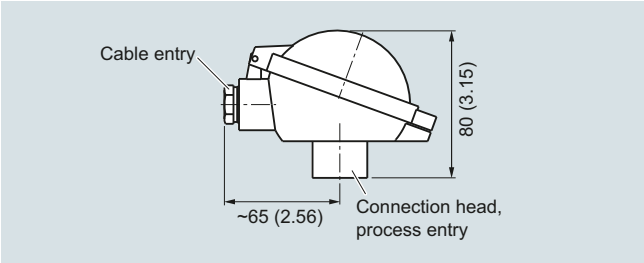

Connection head, aluminum, Type BB0, dimensions in mm (inch)

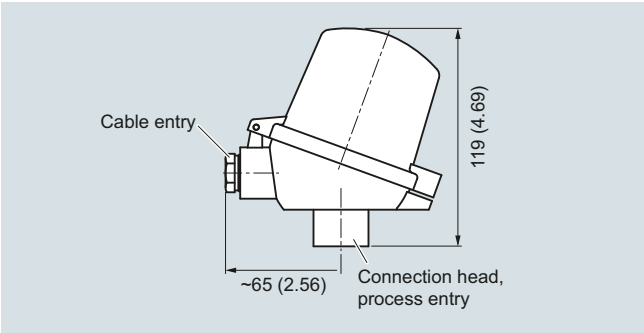

Connection head, aluminum, Type BC0, plastic, type BP0, dimensions in mm (inch)

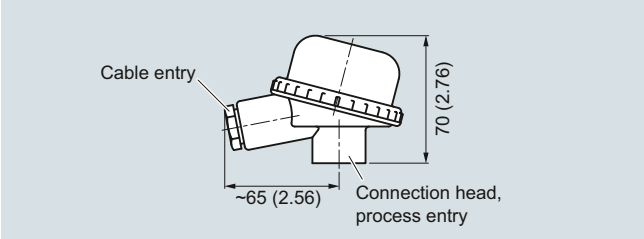

Connection head, plastic, Type BM0, dimensions in mm (inch)

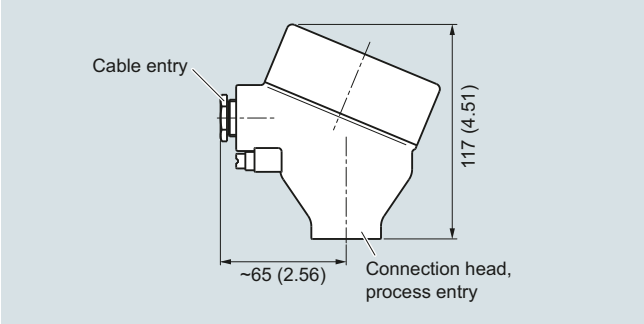

Connection head, aluminum, Type AG0, stainless steel, Type AU0, dimensions in mm (inch)

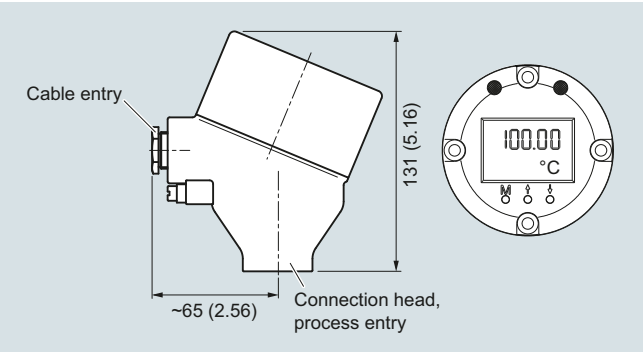

Connection head with 4-20 mA display, aluminum, Type AH0, stainless steel, Type AV0, dimensions in mm (inch)

© Siemens 2020

Selection and Ordering data	Article No.
SITRANS TS500 **Tubular thermowell, low to medium stress, according to DIN 43722, Type 3G, screwed design, with extension**	**7MC751-** ■ - ■■■■■ - ■■■■
Head	
Aluminum head, BA0, flange cover, Standard	A
Aluminum head, BB0, low hinged cover, screw connection	B
Aluminum head, BC0, high hinged cover, screw connection	C
Aluminum head, AG0, screw cover, suitable for Ex d[1]	G
Aluminum head, AH0, screw cover, suitable for Ex d, display[1]	H
Plastic head, BM0, screw cover	M
Plastic head, BP0high hinged cover, screw connection	P
Stainless steel head, AU0, screw cover, Ex d[1]	U
Stainless steel head, screw cover, Ex d, display[1]	V
Sensor[2] Please note: The accuracy class range can be lower than the measuring range. For more information, see page 2/21	
Pt100, basis, -50 ... +400 °C (-58 ... +752 °F)	A
Pt100, vibration resistant, -50 ... +400 °C (-58 ... +752 °F)	B
Pt100, expanded range, -196 ... +600 °C (-321 ... +1 112 °F)	C
Thermocouple Type J, -40 ... +750 °C (-40 ... +1 382 °F)	J
Thermocouple Type K, -40 .. . +1 000 °C (-40 ... +1 832 °F)	K
Thermocouple Type N, -40 ... + 1000 °C (-40 ... +1 832 °F)	N
Sensor number/Accuracy Pt 100 connection: 1 x 4-wire connection or 2 x 3-wire connection, see "Measuring technology: connection types", page 2/23	
Single, basic accuracy (Class 2/Class B)	1
Single, increased accuracy (Class 1/Class A)	2
Single, highest accuracy (Class AA)	3
Double, basic accuracy (Class 2/Class B)	5
Double, increased accuracy (Class 1/Class A)	6
Double, highest accuracy (Class AA)	7

1) Ex d in connection with Order code E03

2) Pt1000 versions are also available. To find these, please switch to Online Configuration in the PIA Life Cycle Portal: www.siemens.com/pia-portal

Selection and Ordering data	Order code
Further designs Add "**-Z**" to Article No. and specify Order code.	
Insertion length customer-specific Select range, enter desired length in plain text (No entry = standard length)	**Y44**
Extension length customer-specific Select range, enter desired length in plain text (No entry = standard length)	**Y45**
Options Add "**-Z**" to Article No. and add options, separate extensions with "+".	
Built-in head transmitter Measuring range to be set must be specified with plain text data "Y01".	
SITRANS TH100, input 1 x Pt100, 4 ... 20 mA	**T12**
SITRANS TH320, input 1 x universal, 4 ... 20 mA	**T24**
SITRANS TH320, input 1 x universal, HART	**T34**
SITRANS TH420, input 2 x universal, HART	**T35**
SITRANS TH400, input 1 x universal, PA	**T40**
SITRANS TH400, input 1 x universal, PA, Ex	**T41**
SITRANS TH400, input 1 x universal, FF	**T45**
SITRANS TH400, input 1 x universal, FF, Ex	**T46**
Explosion protection	
Without explosion protection requirements (Europe, Australia, New Zealand)	**E00**
Intrinsic safety "i"/"IS[1] according to ATEX and IECEx (Europe, Australia, New Zealand)	**E01**
Flameproof enclosure "d"/"XP; dust protection through housing "t"/"DIP"[2] according to ATEX and IECEx (Europe, Australia, New Zealand)	**E03**
Non-sparking "ec" according to ATEX and IECEx (Europe, Australia, New Zealand)	**E04**
Without explosion protection requirements (USA, Canada) Basis FM	**E10**
Flameproof enclosure "d"/"XP; dust protection through housing "t"/"DIP"[2] according to cFMus (USA, Canada); other connections (M,G,R)	**E14**
Non-sparking "nA"/"NI" according to cFMus (USA, Canada)	**E16**
Without explosion protection requirements (USA, Canada), Basis CSA	**E17**
Intrinsic safety "i"/"IS"[1] according to cCSAus (USA, Canada)	**E18**
Flameproof enclosure "d"/"XP; dust protection through housing "t"/"DIP"[2] according to cCSAus (USA); other connections (M, G, R)	**E21**
Non-sparking "nA"/"NI" according to cCSAus (USA, Canada)	**E23**
Without explosion protection requirements (China)	**E54**
Intrinsic safety "i"/"IS"[1] according to NEPSI (China)	**E55**
Flameproof enclosure "d"; dust protection through housing "t"[2] according to NEPSI (China)	**E56**
Non-sparking "nA"/"NI" according to NEPSI (China)	**E57**
Without explosion protection requirements (EAC)	**E80**
Intrinsic safety "i"/"IS"[1] according to EACEx (EAC)	**E81**
Flameproof enclosure "d"/"XP; dust protection through housing "t"/"DIP"[2] according to EACEx (EAC)	**E82**
Non-sparking "nA"/"NI" according to EACEx (EAC)	**E83**
Marine approvals Det Norske Veritas Germanischer Lloyd (DNV GL)	**D01**

© Siemens 2020

Type 3G, fast response, screwed design, with extension

Selection and Ordering data	Order code
Certificates and approvals	
EN 10204-3.1 Inspeciton certificate for materials coming into contact with media	**C12**
EN 10204-3.1 Inspection certificate for hydrostatic pressure test	**C31**
EN 10204-3.1 Inspection certificate for helium leak test	**C32**
EN 10204-3.1 Inspection certificate for dye-penetration-test	**C33**
EN 10204-3.1 Inspectiont certificate: visual, measurement and functional inspection	**C34**
EN 10204-2.1: Declaration of compliance with the order	**C35**
ISO 9001 grease-free (cleaned for e.g. oxygen applications)	**C51**
EN 10204-3.1 Acceptance test certificate "Positive Materials Identification" (PMI)	**On request**
Designation, calibration	
Stainless steel TAG plate , enter lettering in plain text	**Y15**
Plant calibration per 1 point, enter temperature in plain text	**Y33**
Transmitter options	
Transmitter, enter complete setting in plain text (Y01:+/-NNNN ... +/-NNNN C,F), marking on the device when Order code "Y15" is selected	**Y01**
Enter measuring point (max. 8 characters) in plain text	**Y17**
Transmitter, enter measuring point description (max. 16 characters) in plain text	**Y23**
Transmitter, enter measuring point text (max. 32 characters) in plain text	**Y24**
Transmitter, enter bus address in plain text	**Y25**
Transmitter, fail-safe value 3.6 mA (instead of 22.8 mA)	**U36**
SITRANS TH320/420 transmitter with SIL2/3 certificate	**C20**
Transmitter test protocol (5 points)	**C11**
Further options	
Connection form, flying leads (for the direct transmitter assembly, delivery without screws and springs)	**G01**
M12 device plug (in combination with transmitter, Non-Ex and intrinsically safe, max. IP65/67)	**G12**
Han 7D device plug (Non Ex and intrinsically safe, without mating connector max. IP65/67)	**G13**
Connection head with ½" NPT thread without cable gland, for AU0 and AH0 only IP66	**G20**
with outer earth screw for heads AG0, AH0, AU0 and AV0	**A02**
with inner earth screw for heads BC0, AG0, AH0, AU0 and AV0	**A03**
Option not found?	
Handling number special version	**Y99**

1) Please select Ex i version of the optional transmitter.

2) Only with connection heads code AG0, AH0, AU0, AV0, without cable gland (please select non-Ex version of the optional transmitter).

You find ordering examples on page 2/40.
Accessories, see page 2/251.

© Siemens 2020

Dimensional drawings

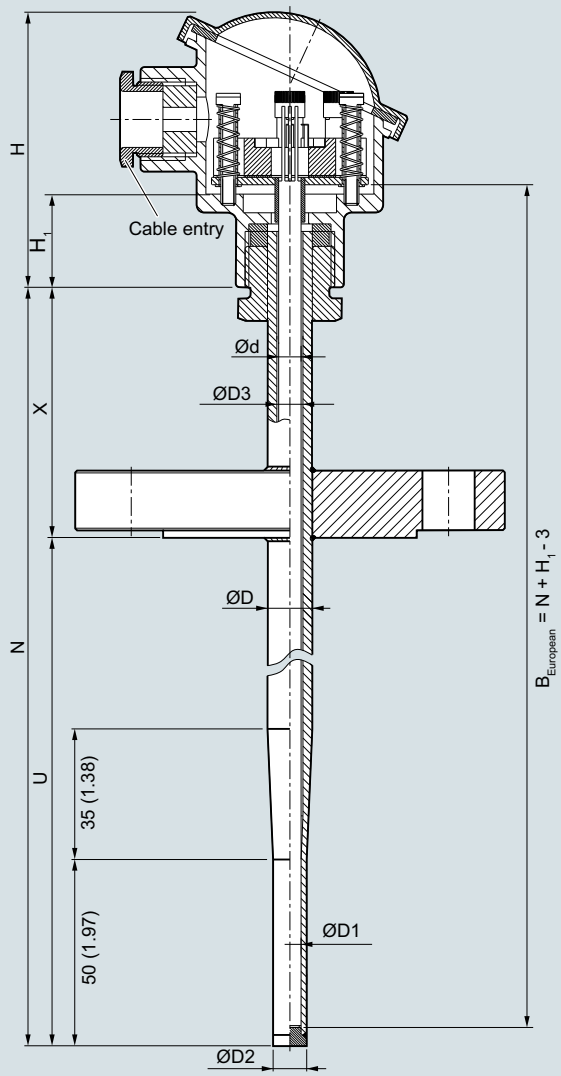

B	Measuring insert length
Ød	Measuring insert outer diameter (6 (0.24))
ØD	Process connection outer diameter
ØD1	Tip internal diameter
ØD2	Tip outer diameter
ØD3	Thermowell internal diameter
H	Head height
H_1	Type Axx = 41 (1.61) Type Bxx = 26 (1.02)
N	Nominal length
U	Insertion length
X	Extension length, floor strength 6 mm

SITRANS TS500, temperature sensors for vessels and pipes, tubular thermowell for low to medium stress, according to DIN 43772, type 3F, with flange, with extension, dimensions in mm (inch)

© Siemens 2020

Type 3F, fast response, with flange and extension

Selection and Ordering data	Article No.	Ord. Code
SITRANS TS500 ↗ **Tubular thermowell, low to medium stress, according to DIN 43722, Type 3F, with flange, with extension**	**7MC751-**	
↗ Click on the Article No. for the online configuration in the PIA Life Cycle Portal.		
Material, in contact with media		
316Ti (1.4571)	1	
316L (1.4404 or 1.4435)	2	
Process connection		
Flange EN; DN 40 PN 40 B1	2 B	
Flange EN; DN 50 PN 40 B1	2 C	
Flange ASME; 1.0" RF 150	2 E	
Flange ASME; 1.0" RF 300	2 F	
Flange ASME; 1.5" RF 150	2 G	
Flange ASME; 1.5" RF 300	2 H	
Flange ASME; 2.0" RF 150	2 J	
Flange ASME; 2.0" RF 300	2 K	
Flange ASME; 1.0" RF 600	2 L	
Flange ASME; 1.5" RF 600	2 N	
Flange ASME; 1.5" RF 900	2 R	
Flange ASME; 2.0" RF 600	2 S	
Flange ASME; 2.0" RF 900	2 T	
Flange EN; DN 32 PN 40 B1	4 A	
Flange EN; DN 40 PN 100 B1	4 B	
Flange EN; DN 50 PN 16 B1	4 C	
Flange EN; DN 80 PN 16 B1	4 D	
Flange EN; DN 100 PN 16 B1	4 E	
Thermowell form		
3F; 12/9 mm (0.47/0.35 inch)	K	
Insertion length U standard		
225 mm (8.86 inch)	1 1	
285 mm (11.22 inch)	1 4	
345 mm (13.58 inch)	1 7	
Insertion length U customer-specific enter customer specific length with Y44, see page 2/88 Order codes		
121 ... 140 mm (4.76 ... 5.51 inch) Initial: 140 mm (5.51 inch)	0 3	
141 ... 160 mm (5.55 ... 6.30 inch) Initial: 160 mm (6.3 inch)	0 4	
161 ... 180 mm (6.34 ... 7.09 inch) Initial: 180 mm (7.09 inch)	0 5	
181 ... 200 mm (7.13 ... 7.87 inch) Initial: 200 mm (7.87 inch)	0 6	
201 ... 220 mm (7.91 ... 8.66 inch) Initial: 220 mm (8.66 inch)	0 7	
221 ... 240 mm (8.7 ... 9.45 inch) Initial: 225 mm (8.86 inch)	1 1	
241 ... 260 mm (9.48 ... 10.24 inch) Initial: 250 mm (9.84 inch)	1 2	
261 ... 280 mm (10.28 ... 11.02 inch) Initial: 280 mm (11.02 inch)	1 3	
281 ... 300 mm (11.02 ... 11.81 inch) Initial: 285 mm (11.22 inch)	1 4	
301 ... 320 mm (11.85 ... 12.6 inch) Initial: 315 mm (12.4 inch)	1 5	
321 ... 340 mm (12.64 ... 13.39 inch) Initial: 340 mm (13.39 inch)	1 6	
341 ... 360 mm (13.43 ... 14.17 inch) Initial: 345 mm (13.58 inch)	1 7	
361 ... 380 mm (14.21 ... 14.96 inch) Initial: 380 mm (14.96 inch)	2 1	
381 ... 400 mm (15 ... 15.75 inch) Initial: 400 mm (15.75 inch)	2 2	
401 ... 420 mm (15.79 ... 16.54 inch) Initial: 420 mm (16.54 inch)	2 3	
421 ... 440 mm (16.57 ... 17.32 inch) Initial: 440 mm (17.32 inch)	2 4	
441 ... 460 mm (17.36 ... 18.11 inch) Initial: 460 mm (18.11 inch)	2 5	
461 ... 480 mm (18.15 ... 18.90 inch) Initial: 465 mm (18.30 inch)	2 6	
481 ... 500 mm (18.94 ... 19.68 inch) Initial: 500 mm (19.68 inch)	2 7	

Selection and Ordering data	Article No.	Ord. Code
SITRANS TS500 **Tubular thermowell, low to medium stress, according to DIN 43722, Type 3F, with flange, with extension**	**7MC751-**	
501 ... 550 mm (19.72 ... 21.65 inch) Initial: 510 mm (20.08 inch)	3 1	
551 ... 600 mm (21.69 ... 23.62 inch) Initial: 600 mm (23.62 inch)	3 2	
601 ... 650 mm (23.66 ... 25.59 inch) Initial: 650 mm (25.59 inch)	3 3	
651 ... 700 mm (25.63 ... 27.56 inch) Initial: 700 mm (27.56 inch)	3 4	
701 ... 750 mm (27.6 ... 29.53 inch) Initial: 750 mm (29.53 inch)	3 5	
751 ... 800 mm (29.57 ... 31.50 inch) Initial: 800 mm (31.50 inch)	3 6	
801 ... 850 mm (31.53 ... 33.46 inch) Initial: 850 mm (33.46 inch)	3 7	
851 ... 900 mm (33.50 ... 35.43 inch) Initial: 900 mm (35.43 inch)	4 1	
901 ... 950 mm (35.47 ... 37.40 inch) Initial: 950 mm (37.40 inch)	4 2	
951 ... 1 000 mm (37.44 ... 39.37 inch) Initial: 1 000 mm (39.37 inch)	4 3	
1 001 ... 1 100 mm (39.41 ... 43.31 inch) Initial: 1 100 mm (43.31 inch)	4 4	
Extension		
Standard length for Type 3F DIN 43772 (X=66 mm (2.60 inch))	1	
Extension length - customer specific enter customer specific length with Y45, see page 2/88 Order codes		
75 ...150 mm (2.95 ... 5.91 inch) Initial: 150 mm (5.91 inch)	9	N 1 D
151 ... 300 mm (5.95 ... 11.81 inch) Initial: 300 mm (11.81 inch)	9	N 2 D

Additional configurations on page after next page!

You find ordering examples on page 2/40!

© Siemens 2020

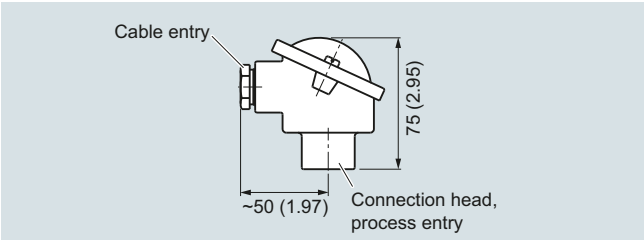

Connection head, aluminum, Type BA0, dimensions in mm (inch)

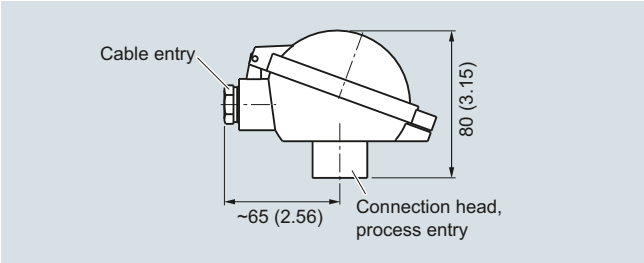

Connection head, aluminum, Type BB0, dimensions in mm (inch)

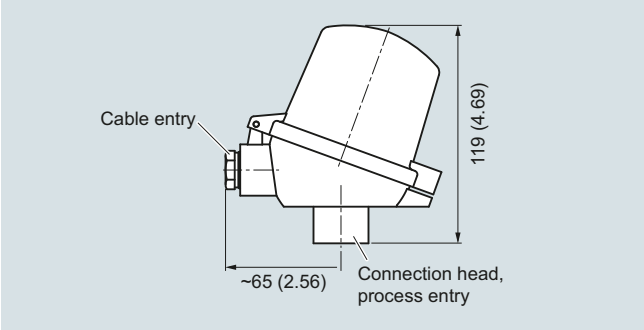

Connection head, aluminum, Type BC0, plastic, type BP0, dimensions in mm (inch)

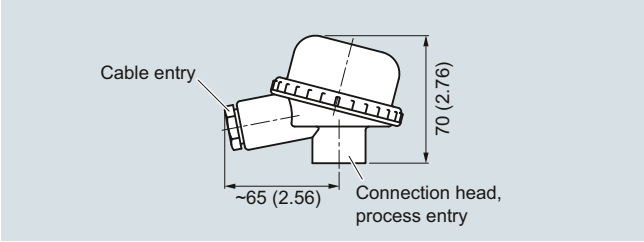

Connection head, plastic, Type BM0, dimensions in mm (inch)

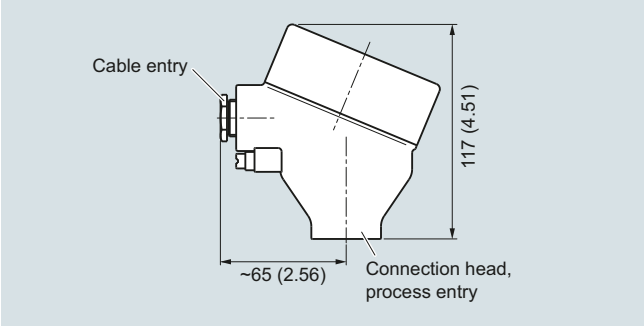

Connection head, aluminum, Type AG0, stainless steel, Type AU0, dimensions in mm (inch)

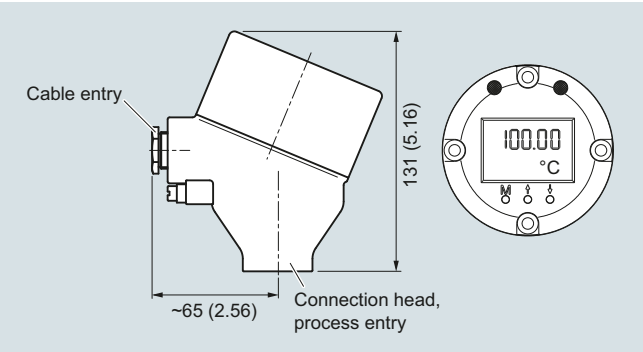

Connection head with 4-20 mA display, aluminum, Type AH0, stainless steel, Type AV0, dimensions in mm (inch)

© Siemens 2020

Type 3F, fast response, with flange and extension

2

Selection and Ordering data	Article No.	Ord. Code
SITRANS TS500 **Tubular thermowell, low to medium stress, according to DIN 43722, Type 3F, with flange, with extension**	**7MC751-**	■ - ■■■■■ - ■■■■ ■■■
Head		
Aluminum head, BA0, flange cover, Standard		**A**
Aluminum head, BB0, low hinged cover, screw connection		**B**
Aluminum head, BC0, high hinged cover, screw connection		**C**
Aluminum head, AG0, screw cover, suitable for Ex d[1]		**G**
Aluminum head, AH0, screw cover, suitable for Ex d, display[1]		**H**
Plastic head, BM0, screw cover		**M**
Plastic head, BP0high hinged cover, screw connection		**P**
Stainless steel head, AU0, screw cover, Ex d[1]		**U**
Stainless steel head, screw cover, Ex d, display[1]		**V**
Sensor[2] Please note: The accuracy class range can be lower than the measuring range. For more information, see page 2/21		
Pt100, basis, -50 ... +400 °C (-58 ... +752 °F)		**A**
Pt100, vibration.resistant, -50 ... +400 °C (-58 ... +752 °F)		**B**
Pt100, expanded range, -196 ... +600 °C (-321 ... +1 112 °F)		**C**
Thermocouple Type J, -40 ... +750 °C (-40 ... +1 382 °F)		**J**
Thermocouple Type K, -40 .. . +1 000 °C (-40 ... +1 832 °F)		**K**
Thermocouple Type N, -40 ... +1 000 °C (-40 ... 1 832 °F)		**N**
Sensor number/Accuracy Pt 100 connection: 1 x 4-wire connection or 2 x 3-wire connection, see "Measuring technology: connection types" page 2/23		
Single, basic accuracy (Class 2/Class B)		**1**
Single, increased accuracy (Class 1/Class A)		**2**
Single, highest accuracy (Class AA)		**3**
Double, basic accuracy (Class 2/Class B)		**5**
Double, increased accuracy (Class 1/Class A)		**6**
Double, highest accuracy (Class AA)		**7**

1) Ex d in connection with Order code E03

2) Pt1000 versions are also available. To find these, please switch to Online Configuration in the PIA Life Cycle Portal: www.siemens.com/pia-portal

Selection and Ordering data	Order code
Further designs Add "**-Z**" to Article No. and specify Order code.	
Insertion length customer-specific Select range, enter desired length in plain text (No entry = standard length)	**Y44**
Extension length customer-specific Select range, enter desired length in plain text (No entry = standard length)	**Y45**
Options Add "**-Z**" to Article No. and add options, separate extensions with "+".	
Built-in head transmitter Measuring range to be set must be specified with plain text data "Y01".	
SITRANS TH100, input 1 x Pt100, 4 ... 20 mA	**T12**
SITRANS TH320, input 1 x universal, 4 ... 20 mA	**T24**
SITRANS TH320, input 1 x universal, HART	**T34**
SITRANS TH420, input 2 x universal, HART	**T35**
SITRANS TH400, input 1 x universal, PA	**T40**
SITRANS TH400, input 1 x universal, PA, Ex	**T41**
SITRANS TH400, input 1 x universal, FF	**T45**
SITRANS TH400, input 1 x universal, FF, Ex	**T46**
Explosion protection	
Without explosion protection requirements (Europe, Australia, New Zealand)	**E00**
Intrinsic safety "i"/"IS[1] according to ATEX and IECEx (Europe, Australia, New Zealand)	**E01**
Flameproof enclosure "d"/"XP; dust protection through housing "t"/"DIP"[2] according to ATEX and IECEx (Europe, Australia, New Zealand)	**E03**
Non-sparking "ec" according to ATEX and IECEx (Europe, Australia, New Zealand)	**E04**
Without explosion protection requirements (USA, Canada) Basis FM	**E10**
Flameproof enclosure "d"/"XP; dust protection through housing "t"/"DIP"[2] according to cFMus (USA, Canada); other connections (M,G,R)	**E14**
Non-sparking "nA"/"NI" according to cFMus (USA, Canada)	**E16**
Without explosion protection requirements (USA, Canada), Basis CSA	**E17**
Intrinsic safety "i"/"IS"[1] according to cCSAus (USA, Canada)	**E18**
Flameproof enclosure "d"/"XP; dust protection through housing "t"/"DIP"[2] according to cCSAus (USA); other connections (M, G, R)	**E21**
Non-sparking "nA"/"NI" according to cCSAus (USA, Canada)	**E23**
Without explosion protection requirements (China)	**E54**
Intrinsic safety "i"/"IS"[1] according to NEPSI (China)	**E55**
Flameproof enclosure "d"; dust protection through housing "t"[2] according to NEPSI (China)	**E56**
Non-sparking "nA"/"NI" according to NEPSI (China)	**E57**
Without explosion protection requirements (EAC)	**E80**
Intrinsic safety "i"/"IS"[1] according to EACEx (EAC)	**E81**
Flameproof enclosure "d"/"XP; dust protection through housing "t"/"DIP"[2] according to EACEx (EAC)	**E82**
Non-sparking "nA"/"NI" according to EACEx (EAC)	**E83**
Marine approvals Det Norske Veritas Germanischer Lloyd (DNV GL)	**D01**

© Siemens 2020

Selection and Ordering data	Order code
Certificates and approvals	
EN 10204-3.1 Inspection certificate for materials coming into contact with media	**C12**
EN 10204-3.1 Inspection certificate for hydrostatic pressure test	**C31**
EN 10204-3.1 Inspection certificate for helium leak test	**C32**
EN 10204-3.1 Inspection certificate for dye-penetration-test	**C33**
EN 10204-3.1 Inspection certificate: visual, measurement and functional inspection	**C34**
EN 10204-2.1: Declaration of compliance with the order	**C35**
ISO 9001 grease-free (cleaned for e.g. oxygen applications)	**C51**
EN 10204-3.1 Acceptance test certificate "Positive Materials Identification" (PMI)	**On request**
Designation, calibration	
Stainless steel TAG plate , enter lettering in plain text	**Y15**
Plant calibration per 1 point, enter temperature in plain text	**Y33**
Transmitter options	
Transmitter, enter complete setting in plain text (Y01:+/-NNNN ... +/-NNNN C,F)	**Y01**
Enter measuring point (max. 8 characters) in plain text	**Y17**
Transmitter, enter measuring point description (max. 16 characters) in plain text	**Y23**
Transmitter, enter measuring point text (max. 32 characters) in plain text	**Y24**
Transmitter, enter bus address in plain text	**Y25**
Transmitter, fail-safe value 3.6 mA (instead of 22.8 mA)	**U36**
SITRANS TH320/420 transmitter with SIL2/3 certificate	**C20**
Transmitter test protocol (5 points)	**C11**
Further options	
Connection form, flying leads (for the direct transmitter assembly, delivery without screws and springs)	**G01**
M12 device plug (in combination with transmitter, Non-Ex and intrinsically safe, max. IP65/67)	**G12**
Han 7D device plug (Non Ex and intrinsically safe, without mating connector max. IP65/67)	**G13**
Connection head with ½" NPT thread without cable gland, for AU0 and AH0 only IP66	**G20**
with outer earth screw for heads AG0, AH0, AU0 and AV0	**A02**
with inner earth screw for heads BC0, AG0, AH0, AU0 and AV0	**A03**
Option not found?	
Handling number special version	**Y99**

1) Please select Ex i version of the optional transmitter.

2) Only with connection heads code AG0, AH0, AU0, AV0, without cable gland (please select non-Ex version of the optional transmitter).

You find ordering examples on page 2/40.
Accessories, see page 2/251.

© Siemens 2020

Dimensional drawings

SITRANS TS500, temperature sensors for vessels and pipes, barstock thermowell for medium to extreme stress, according to DIN 43772..

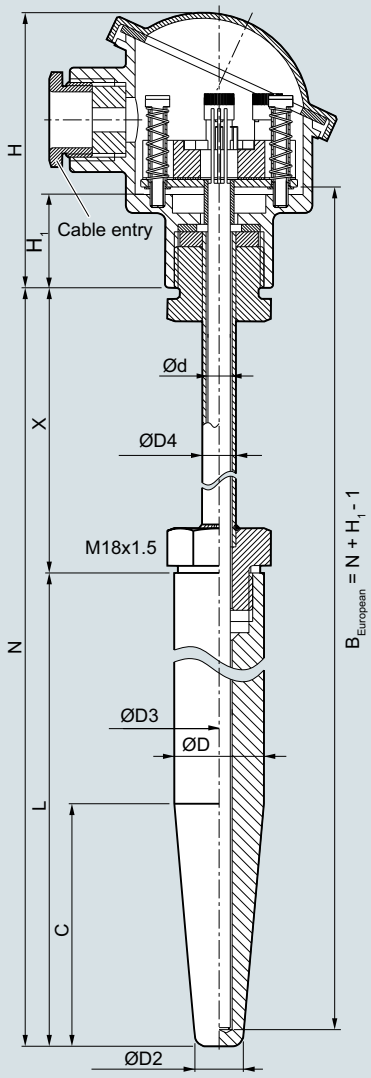

B	Measuring insert length
C	Cone length = U_{min}
Ød	Measuring insert outer diameter (6 (0.24))
ØD	Process connection outer diameter
ØD2	Tip outer diameter, 12.5 (0.49)
ØD3	Thermowell internal diameter
ØD4	Extension outer diameter
H	Head height
H_1	Type Axx = 41 (1.61) Type Bxx = 26 (1.02)
L	Length of thermowell
N	Nominal length
X	Extension length, floor strength 4 mm

Thermowell type 4, for welding in, with extension, dimensions in mm (inch)

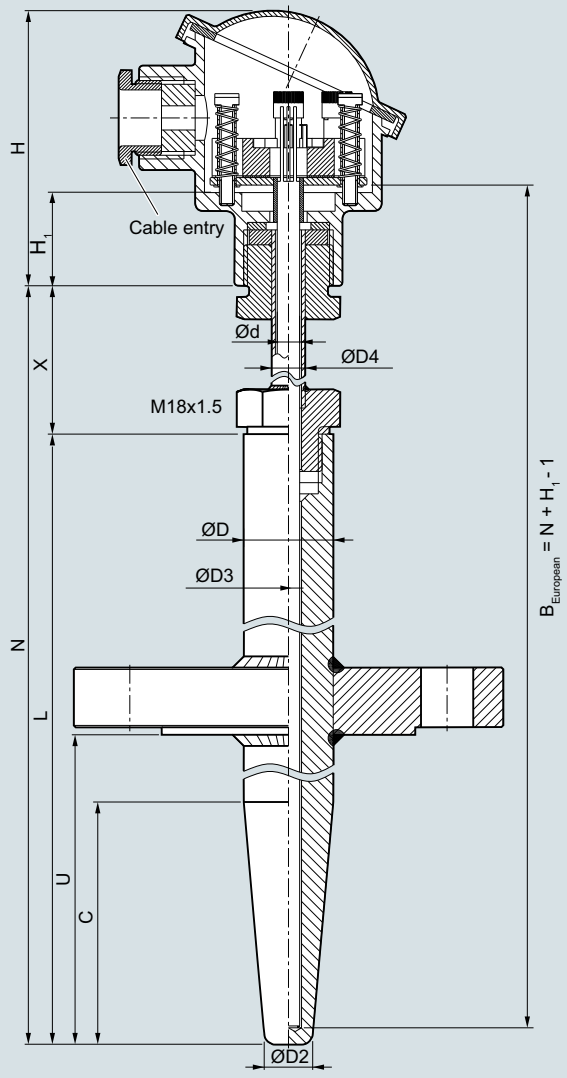

B	Measuring insert length
C	Cone length = U_{min}
Ød	Measuring insert outer diameter (6 (0.24))
ØD	Process connection outer diameter
ØD2	Tip outer diameter, 12.5 (0.49)
ØD3	Thermowell internal diameter
ØD4	Extension outer diameter
H	Head height
H_1	Type Axx = 41 (1.61) Type Bxx = 26 (1.02)
L	Length of thermowell
N	Nominal length
U	Insertion length (Standard: U = L - 70 (2.76))
X	Extension length, floor strength 4 mm

Thermowell type 4F, with flange, with extension, dimensions in mm (inch)

© Siemens 2020

Selection and Ordering data	Article No.	Ord. Code
SITRANS TS500 ↗	**7MC752-**	
Barstock thermowell for medium to extreme stress, according to DIN 43722, Type 4, for welding in, Type 4F with flange, with extension	■ - ■■■■■ -	■■■■ ■■■
↗ Click on the Article No. for the online configuration in the PIA Life Cycle Portal.		
Material, in contact with media		
316Ti (1.4571)	1	
316L (1.4404 or 1.4435)	2	
1.7335 heat resistant, only for versions without flange	3	
1.5415 heat resistant, only for versions without flange	4	
Process connection		
Without (for welding in)	0 N	
Flange DN25 PN10 ... 40 B1	2 A	
Flange 1"RF150	2 E	
Flange 1"RF300	2 F	
Flange 1.5"RF150	2 G	
Flange 1.5"RF300	2 H	
Thermowell form		
For flanged types only: specify with Y44 in plain text if insertion length "U" deviates from standard (U=L-70 mm (2.76 inch)). (Min: U = C; Max; U= L-50 mm (1.97 inch))		
Type 4/4F, L=140 mm (5.51 inch), C=65 mm (3.74 inch), ØD=24 mm (0.95 inch), Ød=6 mm (0.24 inch)	A 0 0	
Type 4/4F, L=200 mm (7.87 inch), C=65 mm (3.74 inch), ØD=24 mm (0.95 inch), Ød=6 mm (0.24 inch)	B 0 0	
Type 4/4F, L=200 mm (7.87 inch), C=125 mm (4.92 inch), ØD=24 mm (0.95 inch), Ød=6 mm (0.24 inch)	D 0 0	
Type 4/4F, L=260 mm (10.24 inch), C=125 mm (4.92 inch), ØD=24 mm (0.95 inch), Ød=6 mm (0.24 inch)	E 0 0	
Extension X		
as per DIN 43772 (X=149 mm (5.87 inch))	1	
Extension X, customer-specific		
enter customer specific length with Y45, see page 2/93 Order codes		
75 ...150 mm (2.95 ... 5.91 inch) Initial: 150 mm (5.91 inch)	9	N 1 D
151 ... 300 mm (5.95 ... 11.81 inch) Initial: 300 mm (11.81 inch)	9	N 2 D
301 ... 450 mm (11.85 ... 17.72 inch) Initial: 450 mm (17.72 inch)	9	N 3 D
451 ... 600 mm (17.86 ... 23.62 inch) Initial: 600 mm (23.62 inch)	9	N 4 D
601 ... 750 mm (23.66 ... 29.53 inch) Initial: 750 mm (29.53 inch)	9	N 5 D
751 ... 900 mm (29.57 ... 45.43 inch) Initial: 900 mm (45.43 inch)	9	N 6 D
901 ... 1 050 mm (45.47 ... 41.34 inch) Initial: 1 050 mm (41.34 inch)	9	N 7 D

Selection and Ordering data	Article No.	Ord. Code
SITRANS TS500	**7MC752-**	
Barstock thermowell for medium to extreme stress, according to DIN 43722, Type 4, for welding in, Type 4F with flange, with extension	■ - ■■■■■ -	■■■■ ■■■
Head		
Aluminum head, BA0, flange cover, Standard	A	
Aluminum head, BB0, low hinged cover, screw connection	B	
Aluminum head, BC0, high hinged cover, screw connection	C	
Aluminum head, AG0, screw cover, suitable for Ex d[1)]	G	
Aluminum head, AH0, screw cover, suitable for Ex d, display[1)]	H	
Plastic head, BM0, screw cover	M	
Plastic head, BP0high hinged cover, screw connection	P	
Stainless steel head, AU0, screw cover, Ex d[1)]	U	
Stainless steel head, AV0, screw cover, Ex d, display[1)]	V	
Sensor[2)]		
Please note: The accuracy class range can be lower than the measuring range. For more information, see page 2/21		
Pt100, basis, -50 ... +400 °C (-58 ... +752)	A	
Pt100, vibration resistant, -50 ... +400 °C (-58 ... +752)	B	
Pt100, expanded range, -196 ... +600 °C (-321 ... +1 112)	C	
Thermocouple Type K, -40 ... +1 000 °C (-40 ... +1 832)	K	
Thermocouple Type J, -40 ... +750 °C (-40 ... +1 382)	J	
Thermocouple Type N, -40 ... +1 000 °C (-40 ... +1 832)	N	
Sensor number/Accuracy		
Pt 100 connection: 1 x 4-wire connection or 2 x 3-wire connection, see "Measuring technology: connection types" , page 2/23		
Single, basic accuracy (Class 2/Class B)	1	
Single, increased accuracy (Class 1/Class A)	2	
Single, highest accuracy (Class AA)	3	
Double, basic accuracy (Class 2/Class B)	5	
Double, increased accuracy (Class 1/Class A)	6	
Double, highest accuracy (Class AA)	7	

1) Ex d in connection with Order code E03

2) Pt1000 versions are also available. To find these, please switch to Online Configuration in the PIA Life Cycle Portal: www.siemens.com/pia-portal

Additional configurations on page after next page!

You find ordering examples on page 2/40!

© Siemens 2020

Type 4+4F, with extension

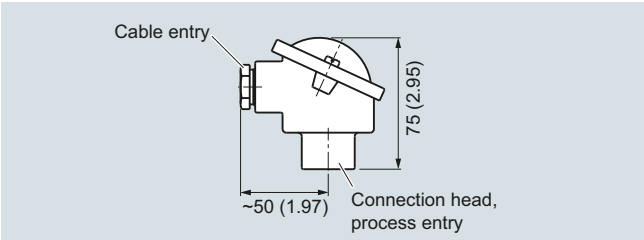

Connection head, aluminum, Type BA0, dimensions in mm (inch)

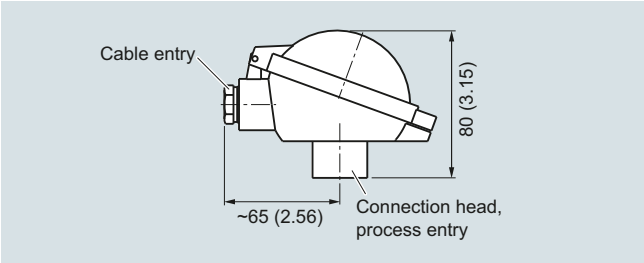

Connection head, aluminum, Type BB0, dimensions in mm (inch)

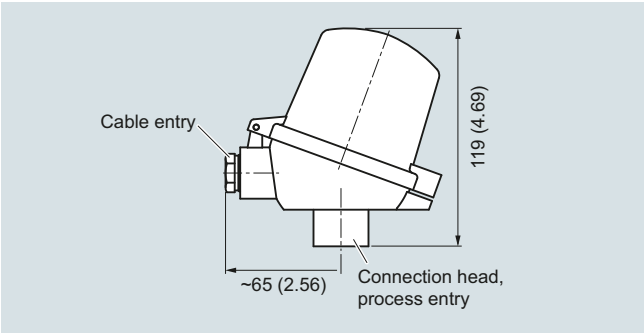

Connection head, aluminum, Type BC0, plastic, type BP0, dimensions in mm (inch)

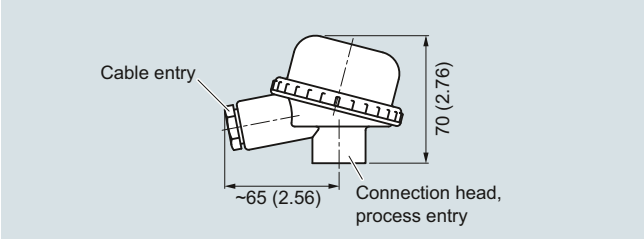

Connection head, plastic, Type BM0, dimensions in mm (inch)

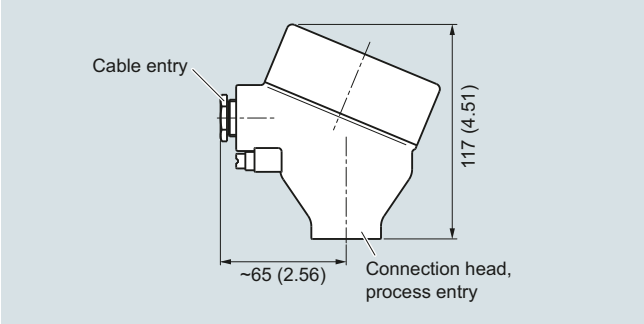

Connection head, aluminum, Type AG0, stainless steel, Type AU0, dimensions in mm (inch)

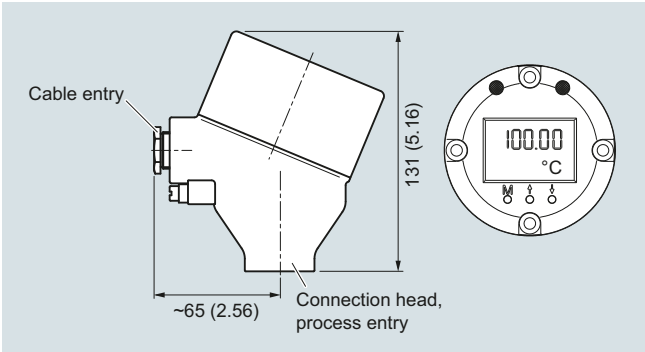

Connection head with 4-20 mA display, aluminum, Type AH0, stainless steel, Type AV0, dimensions in mm (inch)

© Siemens 2020

Selection and Ordering data	Order code
Further designs	
Add "**-Z**" to Article No. and specify Order code.	
Insertion length customer-specific Select range, enter desired length in plain text Insertion length U deviating from standard; (Min: U = C; Max; U= L-50 mm (1.97 inch)), no entry = standard length (U=L-70 mm (2.76 inch))	**Y44**
Extension length customer-specific Select range, enter desired length in plain text (No entry = standard length)	**Y45**
Options Add "**-Z**" to Article No. and add options, separate extensions with "+".	
Built-in head transmitter Measuring range to be set must be specified with plain text data "Y01".	
SITRANS TH100, input 1 x Pt100, 4 ... 20 mA	**T12**
SITRANS TH320, input 1 x universal, 4 ... 20 mA	**T24**
SITRANS TH320, input 1 x universal, HART	**T34**
SITRANS TH420, input 2 x universal, HART	**T35**
SITRANS TH400, input 1 x universal, PA	**T40**
SITRANS TH400, input 1 x universal, PA, Ex	**T41**
SITRANS TH400, input 1 x universal, FF	**T45**
SITRANS TH400, input 1 x universal, FF, Ex	**T46**
Explosion protection	
Without explosion protection requirements (Europe, Australia, New Zealand)	**E00**
Intrinsic safety "i"/"IS"[1] according to ATEX and IECEx (Europe, Australia, New Zealand)	**E01**
Flameproof enclosure "d"/"XP; dust protection through housing "t"/"DIP"[2] according to ATEX and IECEx (Europe, Australia, New Zealand)	**E03**
Non-sparking "ec" according to ATEX and IECEx (Europe, Australia, New Zealand)	**E04**
Without explosion protection requirements (USA, Canada) Basis FM	**E10**
Flameproof enclosure "d"/"XP; dust protection through housing "t"/"DIP"[2] according to cFMus (USA, Canada); other connections (M,G,R)	**E14**
Non-sparking "nA"/"NI" according to cFMus (USA, Canada)	**E16**
Without explosion protection requirements (USA, Canada), Basis CSA	**E17**
Intrinsic safety "i"/"IS"[1] according to cCSAus (USA, Canada)	**E18**
Flameproof enclosure "d"/"XP; dust protection through housing "t"/"DIP"[2] according to cCSAus (USA); other connections (M, G, R)	**E21**
Non-sparking "nA"/"NI" according to cCSAus (USA, Canada)	**E23**
Without explosion protection requirements (China)	**E54**
Intrinsic safety "i"/"IS"[1] according to NEPSI (China)	**E55**
Flameproof enclosure "d"; dust protection through housing "t"[2] according to NEPSI (China)	**E56**
Non-sparking "nA"/"NI" according to NEPSI (China)	**E57**
Without explosion protection requirements (EAC)	**E80**
Intrinsic safety "i"/"IS"[1] according to EACEx (EAC)	**E81**
Flameproof enclosure "d"/"XP; dust protection through housing "t"/"DIP"[2] according to EACEx (EAC)	**E82**
Non-sparking "nA"/"NI" according to EACEx (EAC)	**E83**
Marine approvals	
Det Norske Veritas Germanischer Lloyd (DNV GL)	**D01**

Selection and Ordering data	Order code
Certificates and approvals	
EN 10204-3.1 Inspection certificate for materials coming into contact with media	**C12**
EN 10204-3.1 Inspection certificate for hydrostatic pressure test	**C31**
EN 10204-3.1 Inspection certificate for helium leak test	**C32**
EN 10204-3.1 Inspection certificate for dye-penetration-test	**C33**
EN 10204-3.1 Inspection certificate: visual, measurement and functional inspection	**C34**
EN 10204-2.1: Declaration of compliance with the order	**C35**
NACE Standard MR-01-75 compliance	**C50**
ISO 9001 grease-free (cleaned for e.g. oxygen applications)	**C51**
EN 10204-3.1 Acceptance test certificate "Positive Materials Identification" (PMI)	**On request**
Designation, calibration	
Stainless steel TAG plate , enter lettering in plain text	**Y15**
Plant calibration per 1 point, enter temperature in plain text	**Y33**
Transmitter options	
Transmitter, enter complete setting in plain text (Y01:+/-NNNN ... +/-NNNN C,F), marking on the device when Order code "Y15" is selected	**Y01**
Enter measuring point (max. 8 characters) in plain text	**Y17**
Transmitter, enter measuring point description (max. 16 characters) in plain text	**Y23**
Transmitter, enter measuring point text (max. 32 characters) in plain text	**Y24**
Transmitter, enter bus address in plain text	**Y25**
Transmitter, fail-safe value 3.6 mA (instead of 22.8 mA)	**U36**
SITRANS TH320/420 transmitter with SIL2/3 certificate	**C20**
Transmitter test protocol (5 points)	**C11**
Further options	
Connection form, flying leads (for the direct transmitter assembly, delivery without screws and springs)	**G01**
Full penetration process connection for 316L/316TI	**G02**
M12 device plug (in combination with transmitter, Non-Ex and intrinsically safe, max. IP65/67)	**G12**
Han 7D device plug (Non Ex and intrinsically safe, without mating connector max. IP65/67)	**G13**
Connection head with ½ NPT thread without cable gland, for AU0 and AH0 only IP66	**G20**
with outer earth screw for heads AG0, AH0, AU0 and AV0	**A02**
with inner earth screw for heads BC0, AG0, AH0, AU0 and AV0	**A03**
Option not found?	
Handling number special version	**Y99**

[1] Please select Ex i version of the optional transmitter.

[2] Only with connection heads code AG0, AH0, AU0, AV0, without cable gland (please select non-Ex version of the optional transmitter).

You find ordering examples on page 2/40.
Accessories, see page 2/251.

© Siemens 2020

Dimensional drawings

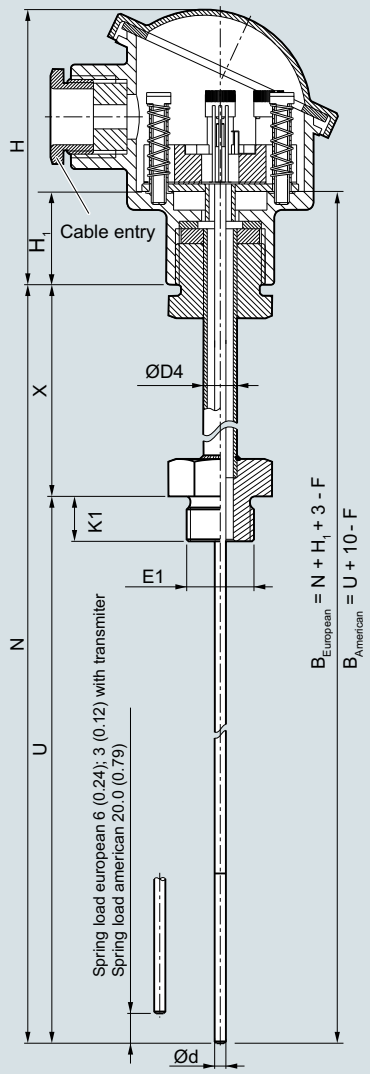

B	Measuring insert length
Ød	Measuring insert outer diameter
ØD4	Extension outer diameter
E1	Process connection, thread size
H	Head height
H_1	Type Axx = 41 (1.61) Type Bxx = 26 (1.02)
K1	Screw depth
N	Nominal length
U	Insertion length
X	Extension length

Recommended spring-load:
European versions = inside length of the thermowell + 3 (0.12)
American versions = inside length of the thermowell + 10 (0.39)

SITRANS TS500, temperature sensors for vessels and pipes. Temperature sensors for installation in existing thermowells, suitable for thermowells in accordance with DIN 43772 and ASME B40.9-2001, with extension of European or American type, dimensions in mm (inch)

Extension (1, 2, 3)[1], adjustable, european, cylindrical

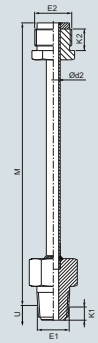

Extension (1, 2, 3)[1], adjustable, European, tapered

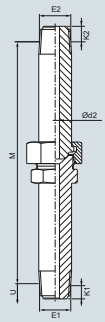

Extension NUN, adjustable, tapered, American (8)[1]

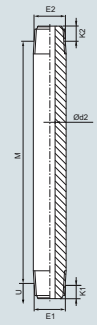

Extension NIP, non-adjustable, tapered, American (6)[1]

[1] Numbers 1 ... 8: s. Selection and Ordering data option extension page 2/95

© Siemens 2020

Selection and Ordering data	Article No.	Ord. Code
SITRANS TS500 ↗	**7MC7500-**	
Temperature sensors for installation in existing thermowells, suitable for thermowells according to DIN 43772 as well as ASME B40.9-2001 with extension European or American types	■■■■■ - ■■■■	■■■
↗ Click on the Article No. for the online configuration in the PIA Life Cycle Portal.		
Model		
existing thermowells	1	
Thread type		
G½" (½"BSPP) (not for American type)	C	
NPT½"	J	
M14x1.5 (not for American type)	T	
M18x1.5 (not for American type)	U	
M20x1.5 (not for American type)	V	
Without thread	N	
Special version	Z	J 1 Y
Insertion ength U free length, standard lengths		
110 mm (4.33 inch)	B 1	
140 mm (5.51 inch)	B 2	
200 mm (7.87 inch)	C 1	
260 mm (10.24 inch)	C 2	
410 mm (16.14 inch)	E 1	
Insertion U free length, customer-specific		
enter customer specific length with Y44, see page 2/98 Order codes		
30 ... 100 mm (1.18 ... 3.94 inch) Initial: 100 mm (3.94 inch)	A 0	
101 ... 200 mm (3.98 ... 7.87 inch) Initial: 200 mm (7.87 inch)	B 0	
201 ... 300 mm (7.91 ... 11.81 inch) Initial: 300 mm (11.81 inch)	C 0	
301 ... 400 mm (11.85 ... 15.75 inch) Initial: 400 mm (15.75 inch)	D 0	
401 ... 500 mm (15.79 ... 19.68 inch) Initial: 500 mm (19.68 inch)	E 0	
501 ... 600 mm (19.72 ... 23.62 inch) Initial: 600 mm (23.62 inch)	F 0	
601 ... 800 mm (23.66 ... 31.50 inch) Initial: 800 mm (31.50 inch)	G 0	
801 ... 1 000 mm (31.54 ... 39.37 inch) Initial: 1 000 mm (39.37 inch)	H 0	
1 001 ... 1 250 mm (39.41 ... 49.21 inch) Initial: 1 250 mm (49.21 inch)	J 0	
1 251 ... 1 500 mm (49.25... 59.05 inch) Initial: 1 500 mm (59.05 inch)	K 0	
Special length < 30 mm (1.18 inch) or > 1500 mm (59.00 inch)	X 0	
Measurement tip diameter		
6 mm (0.24 inch)	6	
8 mm (0.31 inch) (with sleeve) (with sleeve = not replaceable)	8	
10 mm (0.39 inch) (with sleeve) (with sleeve = not replaceable)	0	

Selection and Ordering data	Article No.	Ord. Code
SITRANS TS500	**7MC7500-**	
Temperature sensors for installation in existing thermowells, suitable for thermowells according to DIN 43772 as well as ASME B40.9-2001 with extension European or American types	■■■■■ - ■■■■	■■■
Extension X		
Without extension	0	
European type: X=65 (M=81 mm) (3.15 inch) adjustable	1	
European type: X=139 mm (5.47 inch) (M=155 mm (6.10 inch)) adjustable (DIN standard length for L=110)	2	
European type: X=149 mm (5.87 inch) (M=165 mm (6.50 inch)) adjustable	3	
American type: X=74 mm (2.91 inch) integrated sensor spring, NIP, not adjustable (NPT½"), Umin = 100 mm	6	
American type: X=150 mm (5.91 inch) integrated sensor spring NUN adjustable (NPT½")	8	
Extension X, customer-specific		
enter customer specific length with Y45, see page 2/98 Order codes		
75 ...150 mm (2.95 ... 5.91 inch) Initial: 150 mm (5.91 inch)	9	N 1
151 ... 300 mm (5.95 ... 11.81 inch) Standard: 300 mm (11.81 inch)	9	N 2
301 ... 450 mm (11.85 ... 17.72 inch) Standard: 450 mm (17.72 inch)	9	N 3
Special length < 45 mm (1.77 inch) or > 450 mm (17.7 inch)	9	N 8
Model		
European type (M24 adjustable)		D

Additional configurations on page after next page!

You find ordering examples on page 2/40!

© Siemens 2020

For installation in existing thermowells

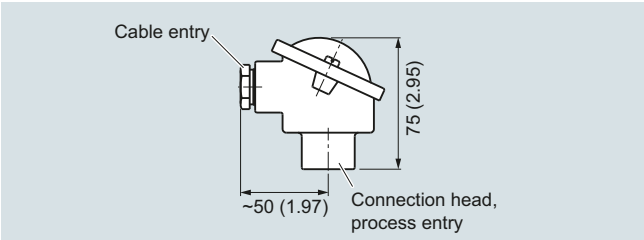

Connection head, aluminum, Type BA0, dimensions in mm (inch)

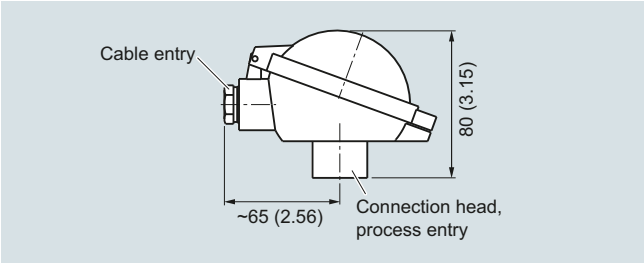

Connection head, aluminum, Type BB0, dimensions in mm (inch)

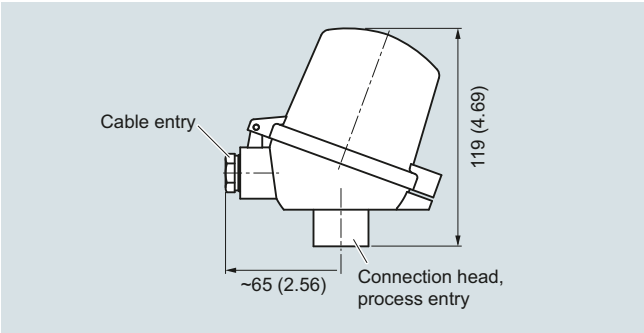

Connection head, aluminum, Type BC0, plastic, type BP0, dimensions in mm (inch)

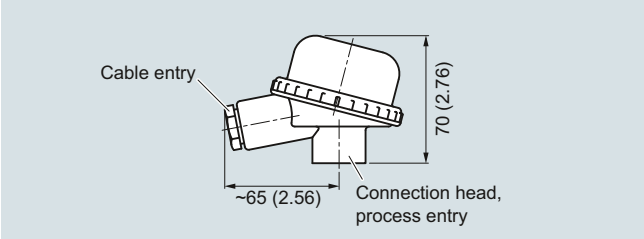

Connection head, plastic, Type BM0, dimensions in mm (inch)

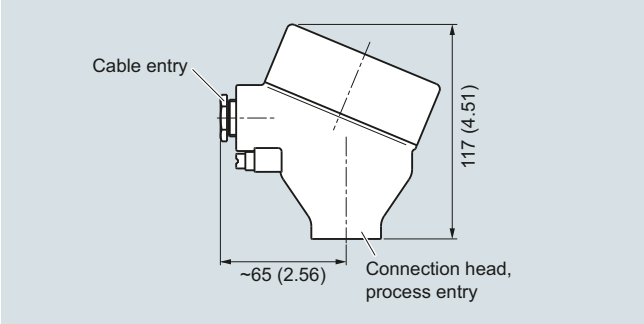

Connection head, aluminum, Type AG0, stainless steel, Type AU0, dimensions in mm (inch)

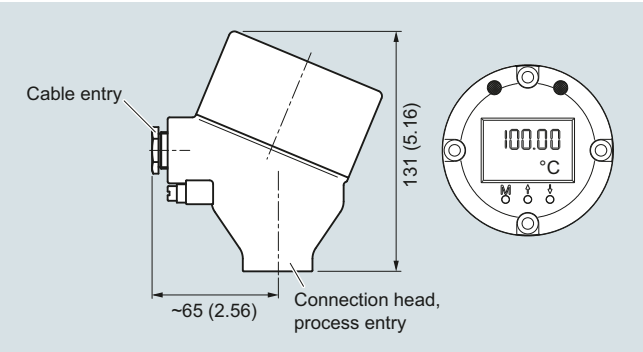

Connection head with 4-20 mA display, aluminum, Type AH0, stainless steel, Type AV0, dimensions in mm (inch)

© Siemens 2020

Option G50: M24x1.5, with seal

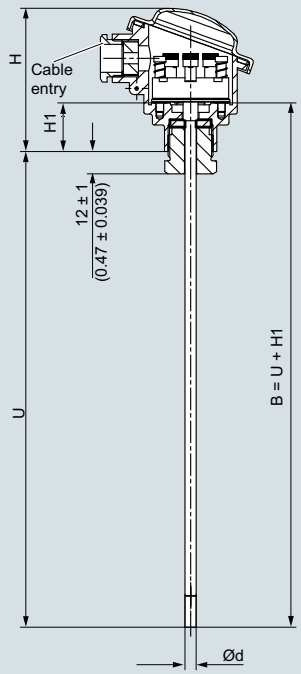

B Measuring insert length
Ød Measuring insert outer diameter
H Head height
H1 Type Axx = 41 (1.61)
Type Bxx = 26 (1.02)
U Insertion length

Option G52: M24x1.5, open

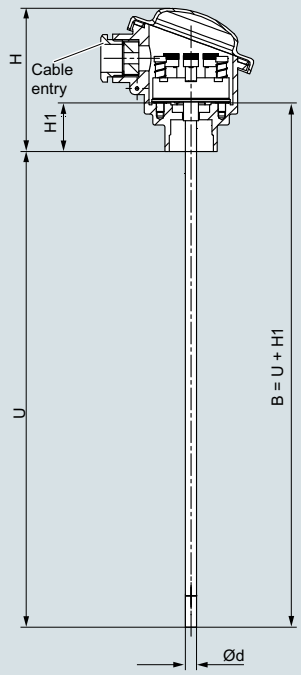

B Measuring insert length
Ød Measuring insert outer diameter
H Head height
H1 Type Axx = 41 (1.61)
Type Bxx = 26 (1.02)
U Insertion length

Option G51: ½" NPT, with seal

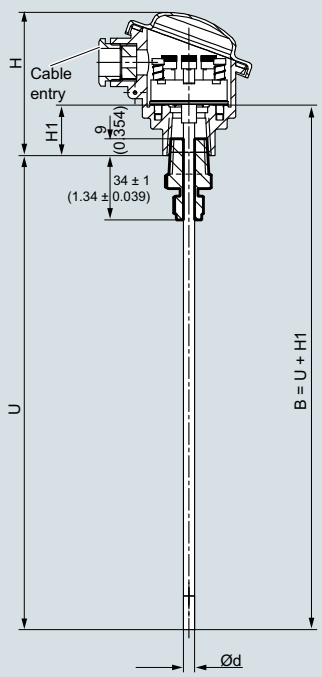

B Measuring insert length
Ød Measuring insert outer diameter
H Head height
H1 Type Axx = 41 (1.61)
Type Bxx = 26 (1.02)
U Insertion length

Option G53: ½" NPT, open

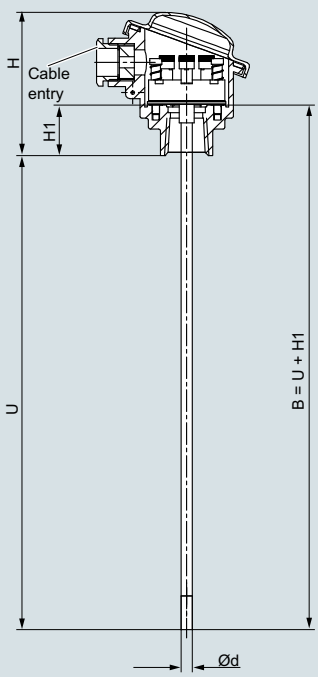

B Measuring insert length
Ød Measuring insert outer diameter
H Head height
H1 Type Axx = 41 (1.61)
Type Bxx = 26 (1.02)
U Insertion length

Input of connection head: Umin = 50 mm (1.97 inch), dimensions in mm (inch)

© Siemens 2020

For installation in existing thermowells

Selection and Ordering data	Article No.	Ord. Code
SITRANS TS500 **Temperature sensors for installation in existing thermowells, suitable for thermowells according to DIN 43772 as well as ASME B40.9-2001 with extension European or American types**	**7MC7500-**	■■■■■ - ■■■ ■■■
Head		
Aluminum head, BA0, flange cover, Standard		A
Aluminum head, BB0, low hinged cover, screw connection		B
Aluminum head, BC0, high hinged cover, screw connection		C
Aluminum head, AG0, screw cover, suitable for Ex d[1]		G
Aluminum head, AH0, screw cover, suitable for Ex d, display[1]		H
Plastic head, BM0, screw cover		M
Plastic head, BP0high hinged cover, screw connection		P
Stainless steel head, AU0, screw cover, Ex d[1]		U
Stainless steel head, AV0, screw cover, Ex d, display[1]		V
Sensor[2] Please note: The accuracy class range can be lower than the measuring range. For more information, see page 2/21		
Pt100, Basis, -50 ... +400 °C (-58 ... +752 °F)		A
Pt100, vibration resistant, -50 ... +400 °C (-58 ... +752 °F)		B
Pt100, expanded range, Umin = 100 mm -196 ... +600 °C (-321 ... +1 112 °F)		C
Thermocouple Type J, -40 ... +750 °C (-40 ... +1 382 °F)		J
Thermocouple Type K, -40 .. . +1 000 °C (-40 ... +1 832 °F)		K
Thermocouple Type N, -40 ... +1 000 °C (-40 ... +1 832 °F)		N
Sensor number/Accuracy Pt 100 connection: 1 x 4-wire connection or 2 x 3-wire connection, see "Measuring technology: connection types", page 2/23		
Single, basic accuracy (Class 2/Class B)		1
Single, increased accuracy (Class 1/Class A)		2
Single, highest accuracy (Class AA)		3
Double, basic accuracy (Class 2/Class B)		5
Double, increased accuracy (Class 1/Class A)		6
Double, highest accuracy (Class AA)		7

[1] Ex d in connection with Order code E03

[2] Pt1000 versions are also available. To find these, please switch to Online Configuration in the PIA Life Cycle Portal: www.siemens.com/pia-portal

Selection and Ordering data	Order code
Further designs Add "**-Z**" to Article No. and specify Order code.	
Insertion length customer-specific Select range, enter desired length in plain text (No entry = standard length)	**Y44**
Extension length customer-specific Select range, enter desired length in plain text (No entry = standard length)	**Y45**
Options Add "**-Z**" to Article No. and add options, separate extensions with "+".	
Built-in head transmitter Measuring range to be set must be specified with plain text data "Y01".	
SITRANS TH100, input 1 x Pt100, 4 ... 20 mA	**T12**
SITRANS TH320, input 1 x universal, 4 ... 20 mA	**T24**
SITRANS TH320, input 1 x universal, HART	**T34**
SITRANS TH420, input 2 x universal, HART	**T35**
SITRANS TH400, input 1 x universal, PA	**T40**
SITRANS TH400, input 1 x universal, PA, Ex	**T41**
SITRANS TH400, input 1 x universal, FF	**T45**
SITRANS TH400, input 1 x universal, FF, Ex	**T46**
Explosion protection	
Without explosion protection requirements (Europe, Australia, New Zealand)	**E00**
Intrinsic safety "i"/"IS[1] according to ATEX and IECEx (Europe, Australia, New Zealand)	**E01**
Flameproof enclosure "d"/"XP; dust protection through housing "t"/"DIP"[2] according to ATEX and IECEx (Europe, Australia, New Zealand)	**E03**
Non-sparking "ec" according to ATEX and IECEx (Europe, Australia, New Zealand)	**E04**
Without explosion protection requirements (USA, Canada) Basis FM	**E10**
Flameproof enclosure "d"/"XP; dust protection through housing "t"/"DIP"[2] according to cFMus (USA); NPT connections at the enclosure are mandatory	**E13**
Flameproof enclosure "d"/"XP; dust protection through housing "t"/"DIP"[2] according to cFMus (USA, Canada); other connections (M,G,R)	**E14**
Non-sparking "nA"/"NI" according to cFMus (USA, Canada)	**E16**
Without explosion protection requirements (USA, Canada), Basis CSA	**E17**
Intrinsic safety "i"/"IS"[1] according to cCSAus (USA, Canada)	**E18**
Flameproof enclosure "d"/"XP; dust protection through housing "t"/"DIP"2) according to cCSAus (USA, Canada); NPT connections **at the enclosure** are mandatory	**E20**
Flameproof enclosure "d"/"XP; dust protection through housing "t"/"DIP"[2] according to cCSAus (USA); other connections (M, G, R)	**E21**
Non-sparking "nA"/"NI" according to cCSAus (USA, Canada)	**E23**
Without explosion protection requirements (China)	**E54**
Intrinsic safety "i"/"IS"[1] according to NEPSI (China)	**E55**
Flameproof enclosure "d"; dust protection through housing "t"[2] according to NEPSI (China)	**E56**
Non-sparking "nA"/"NI" according to NEPSI (China)	**E57**
Without explosion protection requirements (EAC)	**E80**
Intrinsic safety "i"/"IS"[1] according to EACEx (EAC)	**E81**
Flameproof enclosure "d"/"XP; dust protection through housing "t"/"DIP"[2] according to EACEx (EAC)	**E82**
Non-sparking "nA"/"NI" according to EACEx (EAC)	**E83**
Marine approvals	
Det Norske Veritas Germanischer Lloyd (DNV GL)	**D01**

© Siemens 2020

Selection and Ordering data	Order code
Certificates and approvals	
EN 10204-3.1 Factory certificate: visual, measurement and functional inspection	**C34**
EN 10204-2.1: Declaration of compliance with the order	**C35**
EN 10204-3.1 Acceptance test certificate "Positive Materials Identification" (PMI)	**On request**
Designation, calibration	
Stainless steel TAG plate , enter lettering in plain text	**Y15**
Plant calibration per 1 point, enter temperature in plain text	**Y33**
Transmitter options	
Transmitter, enter complete setting in plain text (Y01:+/-NNNN ... +/-NNNN C,F), marking on the device when Order code "Y15" is selected	**Y01**
Enter measuring point (max. 8 characters) in plain text	**Y17**
Transmitter, enter measuring point description (max. 16 characters) in plain text	**Y23**
Transmitter, enter measuring point text (max. 32 characters) in plain text	**Y24**
Transmitter, enter bus address in plain text	**Y25**
Transmitter, fail-safe value 3.6 mA (instead of 22.8 mA)	**U36**
SITRANS TH320/420 transmitter with SIL2/3 certificate	**C20**
Transmitter test protocol (5 points)	**C11**
Further options	
Connection form, flying leads (for the direct transmitter assembly, delivery without screws and springs)	**G01**
M12 device plug (in combination with transmitter, Non-Ex and intrinsically safe, max. IP65/67)	**G12**
Han 7D device plug (Non Ex and intrinsically safe, without mating connector max. IP65/67)	**G13**
Connection head with ½" NPT thread without cable gland, for AU0 and AH0 only IP66	**G20**
Input of the connection head: M24x1.5, with sealing screw, Umin = 50 mm	**G50**
Input of the connection head: 1/2" NPT, with sealing screw, Umin = 50 mm	**G51**
Input of the connection head: M24x1.5, open, Umin = 50 mm	**G52**
Input of the connection head: 1/2" NP, open, Umin = 50 mm	**G53**
with outer earth screw for heads AG0, AH0, AU0 and AV0	**A02**
with inner earth screw for heads BC0, AG0, AH0, AU0 and AV0	**A03**
Option not found?	
Handling number special version	**Y99**

1) Please select Ex i version of the optional transmitter.

2) Only with connection heads code AG0, AH0, AU0, AV0, without cable gland (please select non-Ex version of the optional transmitter).

You find ordering examples on page 2/40.
Accessories, see page 2/251.

© Siemens 2020

Dimensional drawings

European type

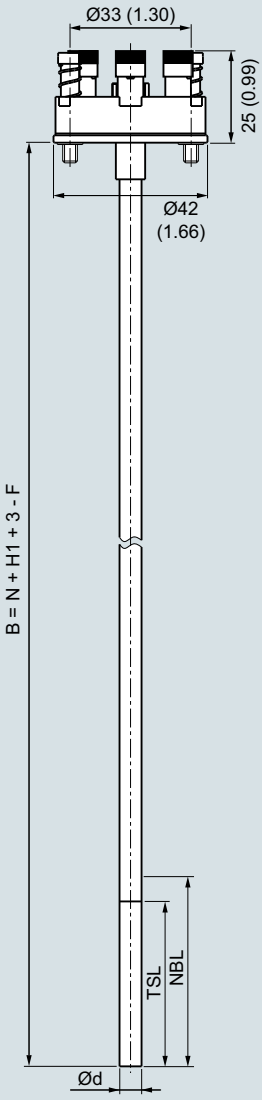

American type

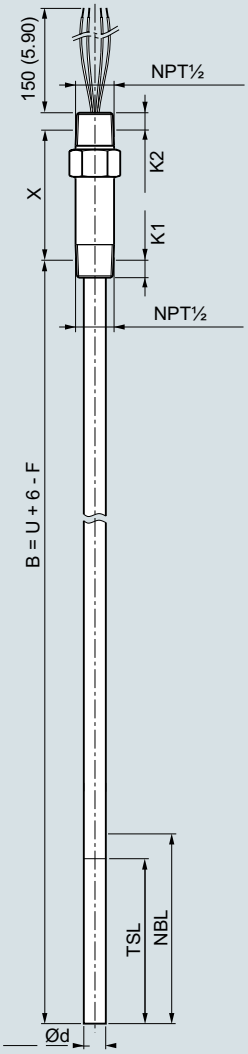

Determination of the measuring insert length

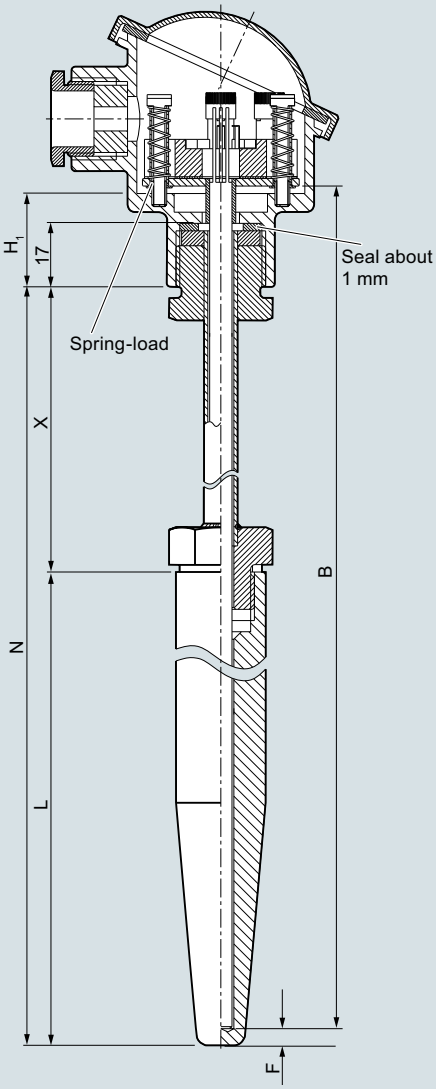

B	Measuring insert length
Ød	Measuring insert outer diameter
N	Nominal length
NBL	Non-bending length
TSL	Temperature-sensitive length
F	Floor strength Type 2: 3 (0.12) Type 3: 6 (0.24) Type 4: 4 (0.16) ASME types: 6.4 (0.25); round down to 6 (0.24)
X	Extension length
K1	Screw depth
K2	Screw depth
L/U	Thermowell length U for Form 2*/ 3*/ 4F L for Form 4
H_1	Type Axx = 41 (1.61) Type Bxx = 26 (1.02)

Recommended spring-load:
European versions with ceramic base = 3 (0.12)
European versions with transmitter = 1 (0.04)
American versions: 6.4 (0.25); round down to 6 (0.24)

Example calculations

European measuring insert (with ceramic base)
Connection head BC0, Thermowell Form 2F, U = 225 mm, X = 64
B = U + X + H1 + 3 – F
B = 225 + 64 + 26 + 3 – 3 = 315

American measuring insert
Connection head AG0, Thermowell Form 4, L = 200 mm
B = L + 6 - F
B = 200 + 6 – 4 = 202

For the NTP thread, please take tolerances into consideration and select a shorter sensor or use PTFE tape for mounting, for example: -3 (0.12).

SITRANS TSinsert measuring inserts for temperature sensors, replaceable, mineral-insulated design
European type (DIN ceramic base), spring load approx. 6 mm (0.24 inch)/3 mm (0.12 inch) with transmitter
American type, spring load approx. 21 mm (0.83 inch); determination of measuring insert length, dimensions in mm (inch);
Cold End types: see drawings on page 2/102

© Siemens 2020

Selection and Ordering data	Article No.						
SITRANS TSinsert for temperature sensors, replaceable, mineral-insulated design, European or American type	**7MC701**	■	-	■	■	■	■
↗ Click on the Article No. for the online configuration in the PIA Life Cycle Portal.							
Measurement tip diameter							
6 mm (0.24 inch)		6					
8 mm (0.31 inch) (with sleeve)		8					
10 mm (0.39 inch) (with sleeve)		0					
Type							
European type - DIN ceramic base			1				
European type - DIN flying leads, absolutely necessary with built-on transmitter			2				
American type - ANSI (nipple spring)			5				
Sensor[1)]							
Please note: The accuracy class range can be lower than the measuring range. For more information, see page 2/21							
Pt100, basis, -50 ... +400 °C (-58 ... +752 °F)				A			
Pt100, vibration-resistant, -50 ... +400 °C (-58 ... +752 °F)				B			
Pt100, expanded range, Umin = 100 mm -196 ... +600 °C (-321 ... +1 112 °F)				C			
Thermocouple Type J, -40 ... +750 °C (-40 ... +1 382 °F)				J			
Thermocouple Type K, -40 .. . +1 000 °C (-40 ... +1 832 °F)				K			
Thermocouple Type N, -40 ... +1 000 °C (-40 ... +1 832 °F)				N			
Sensor number/Accuracy							
Pt 100 connection: 1 x 4-wire connection or 2 x 3-wire connection, see "Measuring technology: connection types" page 2/23							
Single, basic accuracy (Class 2/Class B)					A		
Single, increased accuracy (Class 1/Class A)					B		
Single, highest accuracy (Class AA)					C		
Double, basic accuracy (Class 2/Class B)					D		
Double, increased accuracy (Class 1/Class A)					E		
Double, highest accuracy (Class AA)					F		
Measuring insert length B, standard							
145 mm (6.89 inch)						1	3
205 mm (8.07 inch)						1	7
275 mm (10.83 inch)						2	1
315 mm (12.40 inch)						2	3
345 mm (13.58 inch)						2	4
375 mm (14.76 inch)						2	5
405 mm (15.94 inch)						2	7
435 mm (17.13 inch)						2	0
555 mm (21.85 inch)						3	5
585 mm (23.03 inch)						3	6

Selection and Ordering data	Article No.						
SITRANS TSinsert for temperature sensors, replaceable, mineral-insulated design, European or American type	**7MC701**	■	-	■	■	■	■
Measuring insert length B, customer-specific							
specify length with Y44, s. page 2/93							
85 ... 100 mm (3.37 ... 3.94 inch) Initial: 100 mm (3.94 inch)						1	1
101 ... 150 mm (3.98 ... 5.91 inch) Initial: 145 mm (5.71 inch)						1	3
151 … 200 mm (5.95 ... 7.87 inch) Initial: 200 mm (7.87 inch)						1	5
201 … 250 mm (7.91 ... 9.84 inch) Initial: 205 mm (8.07 inch)						1	7
251 … 300 mm (9.88 ... 11.81 inch) Initial: 275 mm (10.83 inch)						2	1
301 … 350 mm (11.85 ... 13.78 inch) Initial: 315 mm (12.40 inch)						2	3
351 … 400 mm (13.82 ... 15.75 inch) Initial: 375 mm (14.76 inch)						2	5
401 … 450 mm (15.79 ... 17.72 inch) Initial: 405 mm (15.94 inch)						2	7
451 … 500 mm (17.76 ... 19.68 inch) Initial: 500 mm (19.68 inch)						3	1
501 … 550 mm (19.72 ... 21.65 inch) Initial: 525 mm (20.67 inch)						3	3
551 … 600 mm (21.69 ... 23.92 inch) Initial: 555 mm (21.85 inch)						3	5
601 … 700 mm (23.66 ... 27.56 inch) Initial: 655 mm (25.79 inch)						3	7
701 … 800 mm (27.60 ... 31.50 inch) Initial: 735 mm (28.94 inch)						4	1
801 … 900 mm (31.54 ... 35.43 inch) Initial: 825 mm (32.48 inch)						4	3
901 … 1 000 mm (35.47 ... 39.37 inch) Initial: 950 mm (37.40 inch)						4	5
1 001 … 1 500 mm (39.41 ... 59.05 inch) Initial: 1 250 mm (49.21 inch)						4	7
1 501 … 2 000 mm (59.09 ... 78.74 inch) Initial: 1 700 mm (66.93 inch)						4	8

1) Pt1000 versions are also available. To find these, please switch to Online Configuration in the PIA Life Cycle Portal: www.siemens.com/pia-portal

Additional configurations on page after next page!

You find ordering examples on page 2/40!

© Siemens 2020

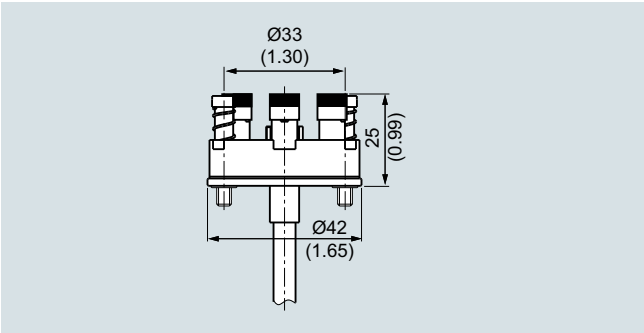

Cold end type, ceramic base, dimensions in mm (inch)

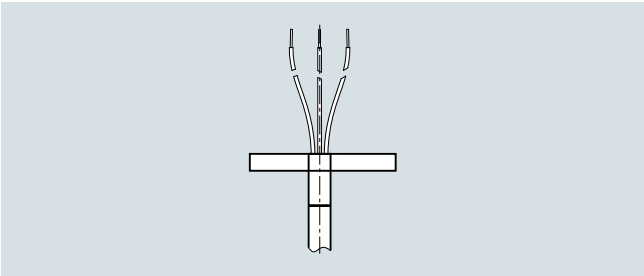

Cold end type, free wire ends, dimensions in mm (inch)

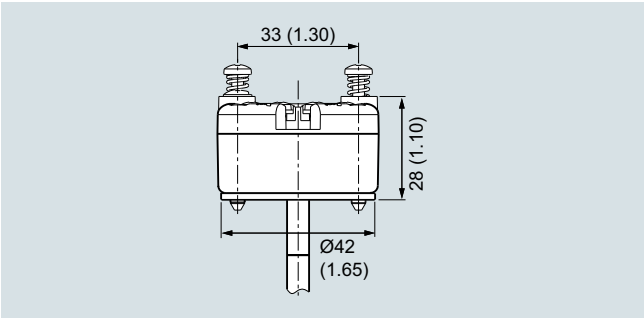

European type:
cold end type, built-on transmitter, dimensions in mm (inch)

© Siemens 2020

Selection and Ordering data	Order code
Further designs	
Add "**-Z**" to Article No. and specify Order code.	
Measuring insert length B Select range, enter desired length in plain text (No entry = standard length)	**Y44**
Options Add "**-Z**" to Article No. and add options, separate extensions with "+".	
Built-in head transmitter Measuring range to be set must be specified with plain text data "Y01".	
SITRANS TH100, input 1 x Pt100, 4 ... 20 mA	**T12**
SITRANS TH320, input 1 x universal, 4 ... 20 mA	**T24**
SITRANS TH320, input 1 x universal, HART	**T34**
SITRANS TH420, input 2 x universal, HART	**T35**
SITRANS TH400, input 1 x universal, PA	**T40**
SITRANS TH400, input 1 x universal, PA, Ex	**T41**
SITRANS TH400, input 1 x universal, FF	**T45**
SITRANS TH400, input 1 x universal, FF, Ex	**T46**
Explosion protection	
Without explosion protection requirements (Europe, Australia, New Zealand)	**E00**
Intrinsic safety "i"/"IS"[1] according to ATEX and IECEx (Europe, Australia, New Zealand)	**E01**
For SITRANS TS500 in flameproof enclosure "d"/"XP type of protection; dust protection through housing "t"/"DIP"[2] according to ATEX and IECEx (Europe, Australia, New Zealand)	**E03**
For SITRANS TS500 in Non-sparking "ec" according to ATEX and IECEx type of protection (Europe, Australia, New Zealand)	**E04**
Without explosion protection requirements (USA, Canada) Basis FM	**E10**
Flameproof enclosure "d"/"XP; dust protection through housing "t"/"DIP"[2] according to cFMus (USA); NPT connections at the enclosure are mandatory	**E13**
Flameproof enclosure "d"/"XP; dust protection through housing "t"/"DIP"[2] according to cFMus (USA, Canada); other connections (M,G,R)	**E14**
Non-sparking "nA"/"NI" according to cFMus (USA, Canada)	**E16**
Without explosion protection requirements (USA, Canada), Basis CSA	**E17**
Intrinsic safety "i"/"IS"[1] according to cCSAus (USA, Canada)	**E18**
For SITRANS TS500 in flameproof enclosure "d"/"XP type of protection; dust protection through housing "t"/"DIP"[2] according to cCSAus (USA, Canada); NPT connections **at the enclosure** are mandatory	**E20**
For SITRANS TS500 in flameproof enclosure "d"/"XP type of protection; dust protection through housing "t"/"DIP"[2] according to cCSAus (USA); other connections (M, G, R)	**E21**
For SITRANS TS500 in non-sparking "nA"/"NI" type of protection according to cCSAus (USA, Canada)	**E23**
Without explosion protection requirements (China)	**E54**
Intrinsic safety "i"/"IS"[1] according to NEPSI (China)	**E55**
For SITRANS TS500 in flameproof enclosure "d" type of protection; dust protection through housing "t"[2] according to NEPSI (China)	**E56**
For SITRANS TS500 in non-sparking "nA"/"NI" type of protection according to NEPSI (China)	**E57**
Without explosion protection requirements (EAC)	**E80**
Intrinsic safety "i"/"IS"[1] according to EACEx (EAC)	**E81**
For SITRANS TS500 in flameproof enclosure "d"/"XP type of protection; dust protection through housing "t"/"DIP"[2] according to EACEx (EAC)	**E82**
For SITRANS TS500 in non-sparking "nA"/"NI" type of protection according to EACEx (EAC)	**E83**

Selection and Ordering data	Order code
Marine approvals	
Det Norske Veritas Germanischer Lloyd (DNV GL)	**D01**
Designation, calibration	
Stainless steel TAG plate , enter lettering in plain text	**Y15**
Plant calibration per 1 point, enter temperature in plain text	**Y33**
Transmitter options	
Transmitter, enter complete setting in plain text (Y01:+/-NNNN ... +/-NNNN C,F)	**Y01**
Enter measuring point (max. 8 characters) in plain text	**Y17**
Transmitter, enter measuring point description (max. 16 characters) in plain text	**Y23**
Transmitter, enter measuring point text (max. 32 characters) in plain text	**Y24**
Transmitter, enter bus address in plain text	**Y25**
Transmitter, fail-safe value 3.6 mA (instead of 22.8 mA)	**U36**
SITRANS TH320/420 transmitter with SIL2/3 certificate	**C20**
Transmitter test protocol (5 points)	**C11**

[1] Please select Ex i version of the optional transmitter.

[2] Only with connection heads code AG0, AH0, AU0, AV0, without cable gland (please select non-Ex version of the optional transmitter).

You find ordering examples on page 2/40.
Accessories, see page 2/251.

© Siemens 2020

Dimensional drawings

Thermowells according to DIN 43772 - Form 4

7MT14, welded

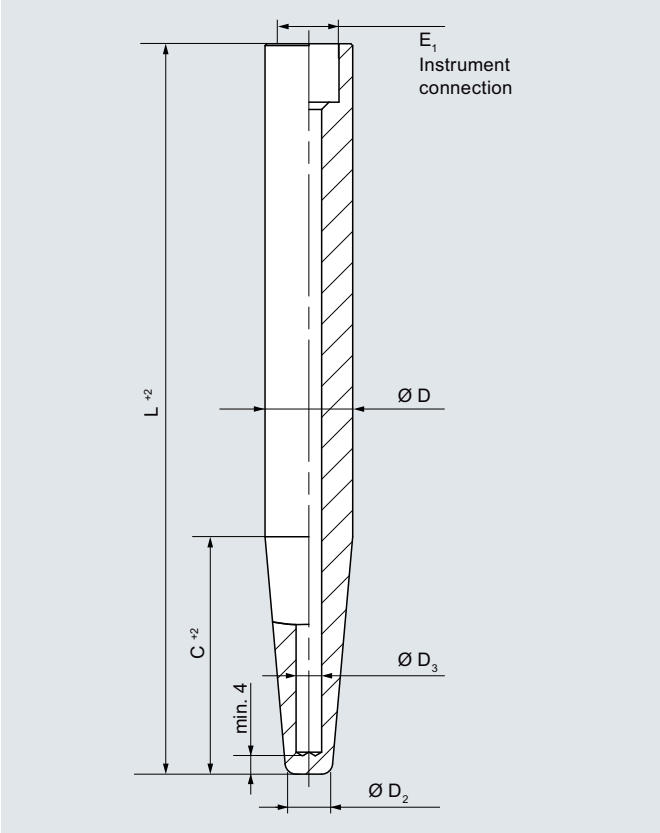

7MT14, flange connection

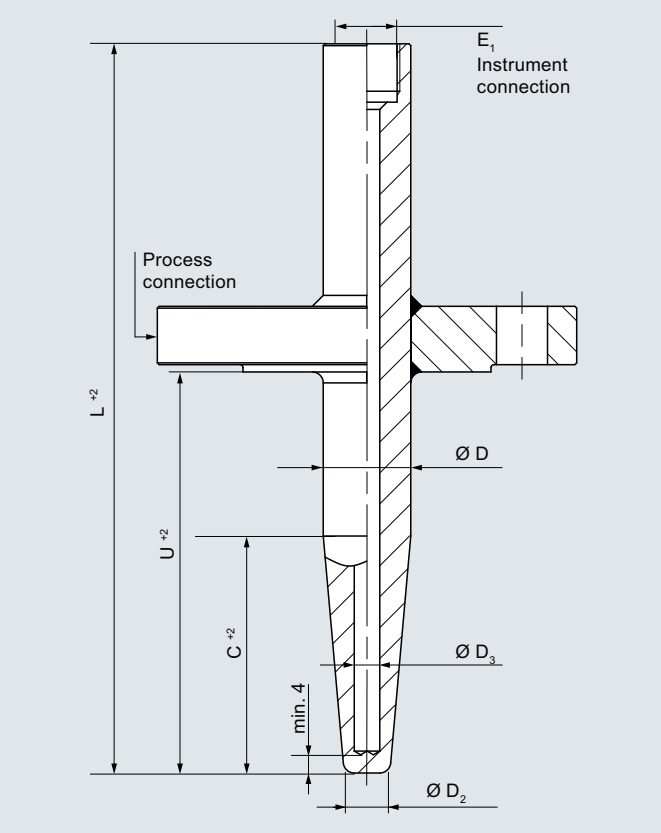

Since March 2000, DIN 43772 replaces the retracted DIN 43763: 1986-03

The name of the D sleeves is from the previous standard but still used today. The table below shows the order information for the corresponding successor products from DIN 43772.

Design	L [mm]	C [mm]	Ordering data
D1	140	65	**7MT1410-2*N00-0NQ2**
D2	200	125	**7MT1410-4*N00-0NQ4**
D4	200	65	**7MT1410-4*N00-0NQ2**
D5	260	125	**7MT1410-5*N00-0NQ4**

Material:

*** = A**: 1.4571
*** = B**: 1.4404
*** = S**: 1.7335
*** = T**: 1.5415

© Siemens 2020

Selection and Ordering data			Article No.	Order code
Barstock thermowells according to DIN 43772 - Form 4			↗ 7MT ■■■■ - ■■■■■ - ■■■■	■■■
↗ Click on the Article No. for the online configuration and configuration check in the PIA Life Cycle Portal.				
Basic model				
Standard	**Process connection**	**Form**		
DIN	Weld-in/flange connection	Form 4/4F	1 4	
External diameter of root D	**External diameter of tip D2**	**Bore hole D3**		
24 mm	12.5 mm	7 mm	1	
26 mm	12.5 mm	7 mm	2	
32 mm	17 mm	11 mm	3	
Thermowell length L				
110 mm			0 1	
140 mm			0 2	
170 mm			0 3	
200 mm			0 4	
260 mm			0 5	
410 mm			0 6	
Thermowell material				
316Ti / 1.4571			A	
316L / 1.4404			B	
Hastelloy C276 / 2.4819			E	
1.7335 Heat-resistant			S	
1.5415 Heat-resistant			T	
PTFE coating (thermowell made of 316/TI/L)			U	
ECTFE (HALAR) (thermowell made of 316/TI/L)			V	
Stellite coating (thermowell made of 316/TI/L)			W	
Customer-specific thermowell			9 8 8 N	Y 9 9 + Y 4 6
Process connection material				
Without (Form 4 for welding)			N	
316Ti / 1.4571			A	
316L / 1.4404			B	
Hastelloy C276 / 2.4819 (flange with flanged wheel)			E	
1.7335 Heat-resistant			S	
1.5415 Heat-resistant			T	
PTFE coating (thermowell made of 316/TI/L)			U	
ECTFE (HALAR) (thermowell made of 316/TI/L)			V	
Stellite coating (thermowell made of 316/TI/L)			W	
Process connection				
Without (Form 4 for welding)			0 0	
Flange according DIN EN 1092-1 Sealing surface Initial: B1 for uncoated variants				
• DN 40, PN 10 - 16			3 2	
• DN 40, PN 25 - 40			3 3	
• DN 50, PN 10 - 16			3 4	
• DN 50, PN 25 - 40			3 5	
Flansch according ASME B16.5 Sealing surface Initial: RF for uncoated variants				
• 1.50 inch; Class 150			6 0	
• 1.50 inch; Class 300			6 1	
• 1.50 inch; Class 600			6 2	
• 2.00 inch; Class 150			6 6	
• 2.00 inch; Class 300			6 7	
• 2.00 inch; Class 600			6 8	
Customer-specific process connection			Z 8 8	K 1 Y
Installation length U				
For welding (no process connection)			0 N	
130 mm			0 A	
190 mm			0 B	
340 mm			0 C	
Customer-specific installation length			8 Y	Y 4 4

© Siemens 2020

Thermowells according to DIN 43772

Selection and Ordering data	Article No.	Order code
Barstock thermowells according to DIN 43772 - Form 4	7 M T ■■■■ - ■■■■■ - ■■■■	■■■
Connection to thermometer E1 (female thread)		
M18x1.5		Q
M20x1.5		R
M27x2.0		T
½-14 NPT		U
G½		W
G¾		X
Special version		Z Q 1 Y
Cone length C		
Without (straight)		0
65 mm		2
73 mm		3
125 mm		4
133 mm		5
275 mm		6

Selection and Ordering data	Order code
Options	
Add "**-Z**" to Article No. and add options, separate extensions with "+".	
Acceptance test certificate according to EN 10204-3.1	
Material certificate for wetted parts	C12
PMI (positive material ident.) for wetted parts	C15
Pressure test	C31
Helium leak test	C32
Dye-penetration-test	C33
Visual, dimensional and functional check	C34
Compliance with order	C35
X-ray test concentricity of bore hole	C47
Ultrasound test concentricity of bore hole	C48
MR-01-75 NACE conformity	C50
MR-01-03 NACE conformity	C53
Grease-free (cleaned for oxygen applications, for example)	C51
Additional options	
Thread protection stainless steel plug and chain	A55
Forged flange	A76
Sealing surface with concentric lines	A77
TAG-marking	Y15

Selection and Ordering data	Order code
Surface treatment, options on request	
Wetted parts stained, neutralized and passivated	W01
Wetted parts electropolished	W02
Additional flange sealing surfaces	
FF-Flat Face according to ASME B16.5	A70
RTJ-Ring-Type Joint according to ASME B16.5	A71
Type B2 according to EN1092-1	A72
Type C according to EN1092-1	A73
Type D according to EN1092-1	A74
Additional information	
Add "**-Z**" to Article No. and specify Order code.	
Additional information in plain text: Process connection (material, type)	K1Y
Additional information in plain text: Connection to thermometer E1	Q1Y
Customer specific production	
Processing and quotation number of special version: specify in plain text	Y99

© Siemens 2020

Dimensional drawings

Thermowells according to ASME B 40.9

7MT21, screwed design, straight, tapered process connection

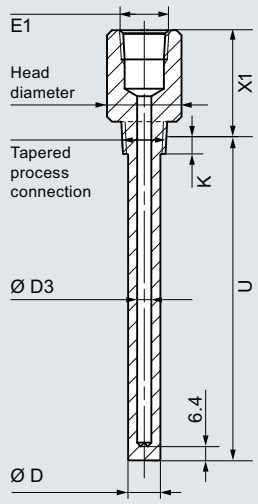

7MT21, screwed design, cylindrical process connection

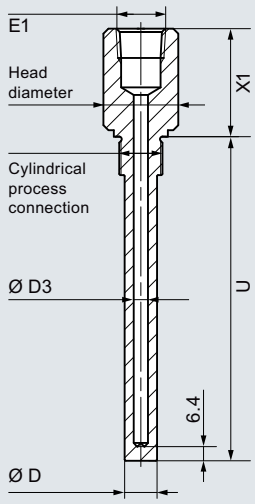

7MT31, for welding, straight

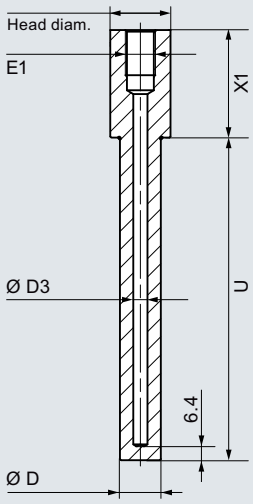

7MT22, screwed design, reduced, tapered process connection

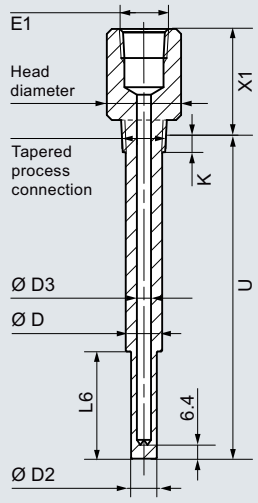

7MT22, screwed design, reduced, cylindrical process connection

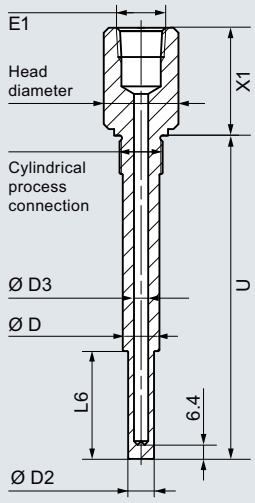

7MT32, for welding, reduced

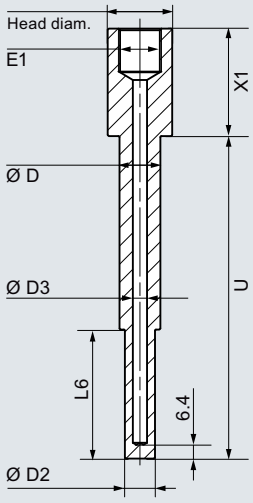

7MT23, screwed design, tapered, tapered process connection

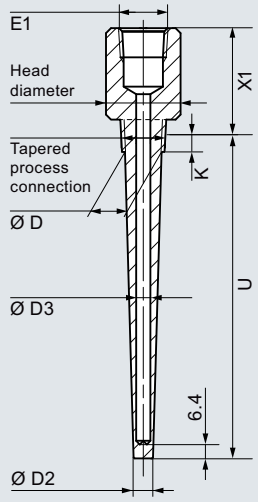

7MT23, screwed design, tapered, cylindrical process connection

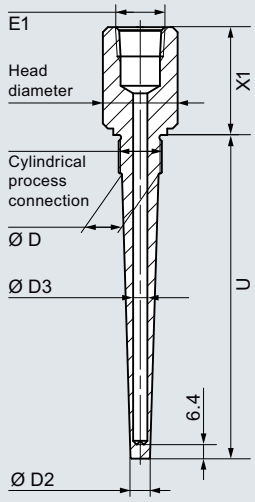

7MT33, for welding, tapered

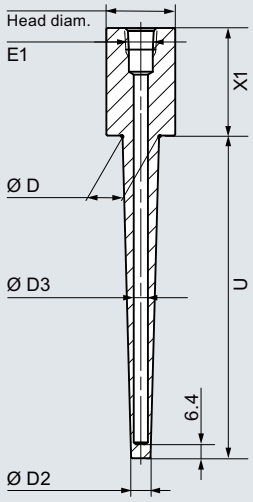

© Siemens 2020

Thermowells according to ASME B40.9

7MT41, flange connection, straight

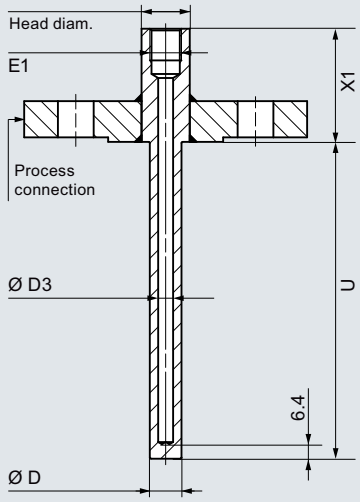

7MT51, Van Stone type, straight

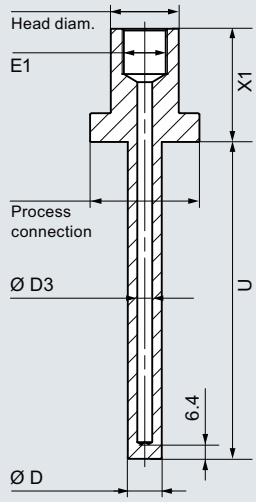

7MT42, flange connection, reduced

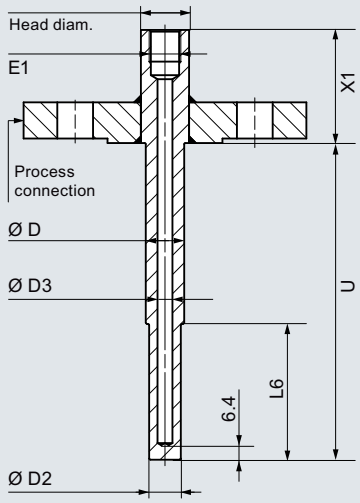

7MT52, Van Stone type, reduced

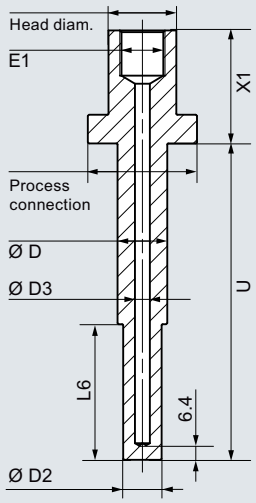

7MT43, flange connection, tapered

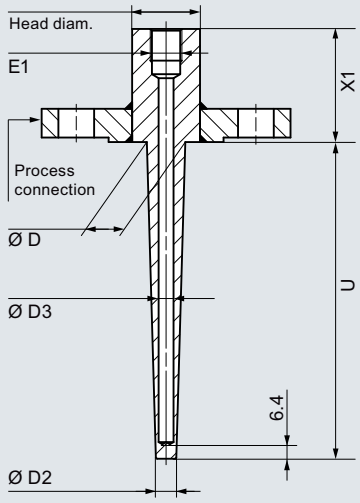

7MT53 Van Stone type, tapered

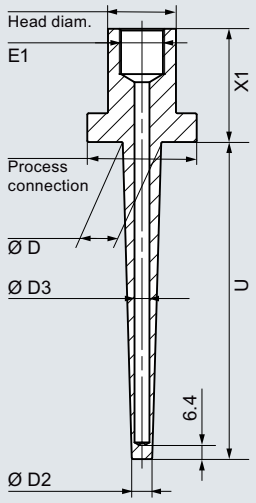

© Siemens 2020

Selection and Ordering data

Article No. 7MT ■■■■ - ■■■■■ - ■■■■ ■■■ Order code

Barstock thermowells according to ASME 40.9

↗ Click on the Article No. for the online configuration and configuration check in the PIA Life Cycle Portal.

Basic model

Standard	Process connection	Form		
ASME	Screwed design	Straight	↗	2 1
ASME	For welding	Straight	↗	3 1
ASME	Flange connection	Straight	↗	4 1
ASME	Van Stone type	Straight	↗	5 1
ASME	Screwed design	Reduced	↗	2 2
ASME	For welding	Reduced	↗	3 2
ASME	Flange connection	Reduced	↗	4 2
ASME	Van Stone type	Reduced	↗	5 2
ASME	Screwed design	Tapered	↗	2 3
ASME	For welding	Tapered	↗	3 3
ASME	Flange connection	Tapered	↗	4 3
ASME	Van Stone type	Tapered	↗	5 3

Connection to thermometer E1

M18x1.5	1
M20x1.5	2
½-14 NPT	5
G½	7
Special version	9 Y 9 9

Head diameter of the thermowell

Screwed design - width across flats	For welding	Flange connection	Van Stone head/ process connection	
	26.7 mm			0
H27	33.4 mm	28.6 mm	33.4 mm / 51 mm	1
	48.3 mm	30 mm	48.3 mm / 73 mm	2
H32		32 mm	60.3 mm / 92 mm	3
H36		34 mm		4
H42		38 mm		5

Head length X1

	Screw-in	Weld-in	Flange	Van Stone	
25 ... 50 mm: Initial 38 mm (7MT2), 45 mm (7MT3/4)	✔	✔	✔		0
51 ... 75 mm: Initial 64 mm	✔	✔	✔	✔	1
76 ... 101 mm: Initial 89 mm	✔	✔	✔	✔	2
102 ... 126 mm: Initial 114 mm	✔	✔	✔	✔	3
127 ... 151 mm: Initial 140 mm	✔	✔	✔	✔	4
152 ... 177 mm: Initial 165 mm	✔	✔	✔	✔	5
178 ... 202 mm: Initial 191 mm	✔	✔	✔		6

Installation length U

25 ... 126 mm: Initial 25 mm	A
127 ... 253 mm: Initial 127 mm	B
254 ... 380 mm: Initial 254 mm	C
381 ... 507 mm: Initial 381 mm	D
508 ... 634 mm: Initial 508 mm	E
635 ... 761 mm: Initial 635 mm	F
762 ... 888 mm: Initial 762 mm	G

© Siemens 2020

Thermowells according to ASME B40.9

Selection and Ordering data

Article No. 7MT ■■■■ - ■■■■■ - ■■■■ ■■■ Order code

Barstock thermowells according to ASME 40.9

Thermowell material

	Screw-in	Weld-in	Flange	Van Stone	
316L / 1.4404	✔	✔	✔	✔	B
Carbon steel / A105	✔	✔	✔		C
Hastelloy C276 / 2.4819 (flange with flanged wheel)			✔	✔	E
Hastelloy C22 / 2.4602 (flange with flanged wheel)			✔	✔	F
304L / 1.4306	✔	✔	✔	✔	H
321 / 1.4541	✔	✔	✔	✔	K
Monel alloy 400 / 2.4360 (flange with flanged wheel)			✔	✔	L
Tantalum (sleeve, thermowell, made of 316/TI/L)			✔		Q
Duplex / 1.4462			✔	✔	P
Super Duplex / 1.4410			✔	✔	R
PTFE coating (thermowell made of 316/TI/L)			✔	✔	U
ECTFE (HALAR) (thermowell made of 316/TI/L)			✔	✔	V
Stellite coating (thermowell made of 316/TI/L)			✔	✔	W
Customer-specific thermowell (head diameter/X1/U/material)	✔		✔	✔	9 8 N N G 1 Y

External diamater of root D/tip D2

Straight thermowell form D	Reduced thermowell form D	Reduced thermowell form D2 (L6 = 60.3 mm/ 2.374 in)	Tapered thermowell form D	Tapered thermowell form D2	
0.50 in (12.7 mm)					0 0
0.625 in (15.9 mm)	0.625 in (15.9 mm)	0.5 in (12.7 mm)	0.625 in (15.9 mm)	0.5 in (12.7 mm)	0 1
0.75 in (19.1 mm)	0.75 in (19.1mm)	0.5 in (12.7 mm)	0.75 in (19.1mm)	0.5 in (12.7 mm)	0 2
1.00 in (25.4 mm)	1.00 in (25.4 mm)	0.5 in (12.7 mm)			0 3
1.25 in (31.8 mm)	1.25 in (31.8 mm)	0.5 in (12.7 mm)	1.00 in (25.4 mm)	0.50 in (12.7 mm)	0 4
1.50 in (38.1 mm)	1.50 in (38.1 mm)	0.5 in (12.7 mm)	1.00 in (25.4 mm)	0.75 in (19.1 mm)	0 5
			1.25 in (31.8 mm)	0.50 in (12.7 mm)	0 7
			1.25 in (31.8 mm)	0.75 in (19.1 mm)	0 8
D = 12 mm (0.47 in)			1.25 in (31.8 mm)	1.00 in (25.4 mm)	1 0
D = 14 mm (0.55 in)					1 1
D = 16 mm (0.63 in)			1.50 in (38.1mm)	0.50 in (12.7 mm)	1 2
D = 19 mm (0.75 in)			1.50 in (38.1 mm)	0.75 in (19.1 mm)	1 3
D = 22 mm (0.87 in)			1.50 in (38.1 mm)	1.00 in (25.4 mm)	1 4
D = 25 mm (0.98 in)			1.50 in (38.1 mm)	1.25 in (31.8 mm)	1 5
D = 27 mm (1.06 in)					1 6
			12 mm (0.47 in)	9 mm (0.35 in)	3 1
			14 mm (0.55 in)	9 mm (0.35 in)	3 3
			16 mm (0.63 in)	9 mm (0.35 in)	3 6
			16 mm (0.63 in)	13 mm (0.51 in)	3 7
			16 mm (0.63 in)	14 mm (0.55 in)	3 8
			19 mm (0.75 in)	9 mm (0.35 in)	4 1
			19 mm (0.75 in)	13 mm (0.51 in)	4 2
			19 mm (0.75 in)	14 mm (0.55 in)	4 3
			22 mm (0.87 in)	9 mm (0.35 in)	4 6
			22 mm (0.87 in)	13 mm (0.51 in)	4 7
			22 mm (0.87 in)	14 mm (0.55 in)	4 8
			22 mm (0.87 in)	16 mm (0.63 in)	5 0
			25 mm (0.98 in)	9 mm (0.35 in)	5 3
			25 mm (0.98 in)	13 mm (0.51 in)	5 4
			25 mm (0.98 in)	14 mm (0.55 in)	5 5
			25 mm (0.98 in)	16 mm (0.63 in)	5 6
			25 mm (0.98 in)	19 mm (0.75 in)	5 7
			27 mm (1.06 in)	9 mm (0.35 in)	6 1
			27 mm (1.06 in)	13 mm (0.51 in)	6 2
			27 mm (1.06 in)	14 mm (0.55 in)	6 3
			27 mm (1.06 in)	16 mm (0.63 in)	6 4
			27 mm (1.06 in)	19 mm (0.75 in)	6 5
			27 mm (1.06 in)	22 mm (0.87 in)	6 6
			32 mm (1.26 in)	9 mm (0.35 in)	7 0
			32 mm (1.26 in)	13 mm (0.51 in)	7 1

© Siemens 2020

Selection and Ordering data					Article No.	Order code
Barstock thermowells according to ASME 40.9					7MT ■■■■ - ■■■■■ - ■■■■	■■■
External diamater of root D/tip D2 (continued)						
Straight thermowell form	**Reduced thermowell form**		**Tapered thermowell form**			
D	**D**	**D2**	**D**	**D2**		
			32 mm (1.26 in)	14 mm (0.55 in)	7 2	
			32 mm (1.26 in)	16 mm (0.63 in)	7 3	
			32 mm (1.26 in)	19 mm (0.75 in)	7 4	
			32 mm (1.26 in)	22 mm (0.87 in)	7 5	
			32 mm (1.26 in)	25 mm (0.98 in)	7 6	
			34 mm (1.34 in)	9 mm (0.35 in)	8 0	
			34 mm (1.34 in)	13 mm (0.51 in)	8 1	
			34 mm (1.34 in)	14 mm (0.55 in)	8 2	
			34 mm (1.34 in)	16 mm (0.63 in)	8 3	
			34 mm (1.34 in)	19 mm (0.75 in)	8 4	
			34 mm (1.34 in)	22 mm (0.87 in)	8 5	
			34 mm (1.34 in)	25 mm (0.98 in)	8 6	
Customer-specific	Customer-specific		Customer-specific		9 0	L 1 Y
Process connection						
Thread for 7MT2... (Screw-in thermowells)						
• G½"					1 A	
• G¾"					1 B	
• G1"					1 C	
• R½"					1 D	
• R¾"					1 E	
• R1"					1 F	
• ½" NPT					1 G	
• ¾" NPT					1 H	
• 1" NPT					1 J	
• M20 x 1.5					1 L	
• M27 x 2					1 M	
• M33 x 2					1 N	
Flange according to EN 1092-1 for 7MT4... (Flange thermowells), Sealing surface Initial: B1 for uncoated variants						
• DN 25, PN 10 - 16					2 D	
• DN 40, PN 10 - 16					2 F	
• DN 50, PN 10 - 16					2 H	
• DN 50, PN 25 - 40					2 J	
Flange according to ASME B16.5 for 7MT4... (Flange thermowells), Sealing surface Initial: RF for uncoated variants						
• 1.00 inch; Class 150					3 E	
• 1.00 inch; Class 300					3 F	
• 1.00 inch; Class 600					3 G	
• 1.50 inch; Class 150					3 K	
• 1.50 inch; Class 300					3 L	
• 1.50 inch; Class 600					3 M	
• 2.00 inch; Class 150					3 R	
• 2.00 inch; Class 300					3 S	
• 2.00 inch; Class 600					3 T	
• 3.00 inch; Class 150					4 C	
• 3.00 inch; Class 300					4 D	
• 3.00 inch; Class 600					4 E	
• 4.00 inch; Class 150					4 G	
• 4.00 inch; Class 300					4 H	
• 4.00 inch; Class 600					4 J	
For 7MT3... and 7MT5... (Weld-in and Van Stone thermowells)						
• Without (optional collar flange for Van-Stone see "Options")					0 N	

© Siemens 2020

Thermowells according to ASME B40.9

Selection and Ordering data	Screw-in	Weld-in	Flange	Van Stone	Article No.	Order code
Barstock thermowells according to ASME 40.9					7 M T ■■■■ - ■■■■■ - ■■■■	■■■
Process connection material (identical to thermowell)						
316L / 1.4404	✔		✔	✔	B	
Carbon steel / A105	✔		✔		C	
Hastelloy C276 / 2.4819 (Flange with flanged wheel)			✔		E	
Hastelloy C22 / 2.4602			✔		F	
304L / 1.4306	✔		✔		H	
321 / 1.4541	✔		✔		K	
Monel alloy 400 / 2.4360 (Flange with flanged wheel)			✔		L	
Tantal (sleeve, thermowell made of 316/TI/L)			✔		Q	
Duplex / 1.4462			✔		P	
Super Duplex			✔		R	
PTFE coating (thermowell made of 316/TI/L)			✔		U	
ECTFE (HALAR) (thermowell made of 316/TI/L)			✔		V	
Stellite coating (thermowell made of 316/TI/L)			✔		W	
Customer-specific	✔		✔	✔	9 N N	N 1 Y
Bore D3						
D3 = 6.6 mm (0.260 in)					2	
Customer-specific					9	R 1 Y

Auswahl- und Bestelldaten	Kurzangabe
Options	
Add "**-Z**" to Article No. and add options, separate extensions with "+".	
Acceptance test certificate according to EN 10204-3.1	
Material certificate for wetted parts	**C12**
PMI (positive material ident.) for wetted parts	**C15**
Pressure test	**C31**
Helium leak test	**C32**
Dye-penetration-test	**C33**
Visual, dimensional and functional check	**C34**
Compliance with order	**C35**
X-ray test for welding seams	**C41**
Ultrasound test for welding seams	**C44**
X-ray test concentricity of bore hole	**C47**
Ultrasound test concentricity of bore hole	**C48**
MR-01-75 NACE conformity	**C50**
MR-01-03 NACE conformity	**C53**
Grease-free (cleaned for oxygen applications, for example)	**C51**
Additional options	
Thread protection stainless steel plug and chain	**A55**
Forged flange	**A76**
Sealing surface with concentric lines	**A77**
TAG-marking	**Y15**
Full penetration options	
Process connection welded	**G02**
Surface treatment, options on request	
Wetted parts stained, neutralized and passivated	**W01**
Wetted parts electropolished	**W02**

Auswahl- und Bestelldaten	Kurzangabe
Additional flange sealing surfaces	
FF-Flat Face according to ASME B16.5	**A70**
RTJ-Ring-Type Joint according to ASME B16.5	**A71**
Type B2 according to EN1092-1	**A72**
Type C according to EN1092-1	**A73**
Type D according to EN1092-1	**A74**
Additional information	
Add "**-Z**" to Article No. and specify Order code.	
Additional information in plain text: Thermowell (head diameter/X1/U/material)	**G1Y**
Additional information in plain text: AD root D / [tip D2]	**L1Y**
Additional information in plain text: Process connection (material/type):	**N1Y**
Additional information in plain text: Bore hole D3:	**R1Y**
Customer specific production	
Length options U: Specify special installation length (in spec. area)	**Y44**
Length options X1: Specify special length extension (in spec. area)	**Y45**
Processing and quotation number of special version: specify in plain text	**Y99**
Optional collar flanges 316L (Van Stone only)	
1.00 inch, Class 150 sealing surface initial: RF	**B24**
1.00 inch, Class 300 sealing surface initial: RF	**B25**
1.00 inch, Class 600 sealing surface initial: RF	**B26**
1.50 inch, Class 150 sealing surface initial: RF	**B29**
1.50 inch, Class 300 sealing surface initial: RF	**B30**
1.50 inch, Class 600 sealing surface initial: RF	**B31**
2.00 inch, Class 150 sealing surface initial: RF	**B35**
2.00 inch, Class 300 sealing surface initial: RF	**B36**
2.00 inch, Class 600 sealing surface initial: RF	**B37**

© Siemens 2020

Overview

The following temperature transmitters are available for installation in the connection head:

SITRANS TH320

Programmable 2-wire temperature transmitter as a 4 to 20 mA version or with HART communication (4 to 20 mA), galvanic isolation. 1 sensor input for resistance thermometer and thermocouples.

SITRANS TH420

Programmable 2-wire temperature transmitter with HART communication (4 to 20 mA), galvanic isolation. 2 sensor inputs for resistance thermometers and thermocouples; therefore expanded functions such as hot backup (redundancy) and drift detection are possible.

SITRANS TH400

Temperature transmitter with PROFIBUS PA or FOUNDATION Fieldbus connection, electrical isolation for resistance thermometers and thermocouple elements.

Note:

- SITRANS TH320/TH420/TH400 can be fitted in the high hinged cover or instead of the terminal base. Retrofitting possible only in the high hinged cover.
- If using intrinsically-safe temperature sensors any installed temperature transmitters must also be intrinsically-safe.

Selection and Ordering data

Detailed information on the transmitters can be found at the respective products under "Compact and head transmitters".

Transmitter to be fitted	Order code
To order the sensor with a built-in temperature transmitter, add "**-Z**" to the article number of the sensor, and supplement with the following order code:	
SITRANS TH320, input 1 x universal, 4 ... 20 mA	**T24**
SITRANS TH320, input 1 x universal, HART	**T34**
SITRANS TH420, input 2 x universal, HART	**T35**
SITRANS TH400, input 1 x universal, PA	**T40**
SITRANS TH400, input 1 x universal, PA, Ex	**T41**
SITRANS TH400, input 1 x universal, FF	**T45**
SITRANS TH400, input 1 x universal, FF, Ex	**T46**
Customer-specific setting of the built-in transmitter (specify settings in plain text)	**Y11**

© Siemens 2020

Design

A thermocouple comprises

- The thermocouple element (sensor) and
- The mounting and connection parts required in each case.

The thermocouple element is formed by two conductors of dissimilar metals or metal alloys which are soldered or welded together at one end, the measuring junction:

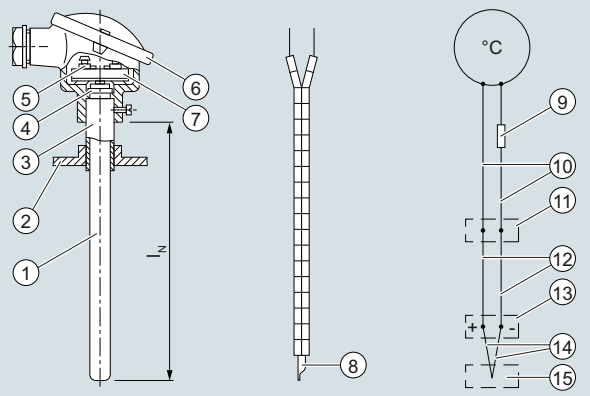

Cross section of thermocouple | Thermocouple element with insulating beads | Connection diagram

l_N Nominal length

1. Ceramic thermowell
2. Locating flange
3. Support tube
4. Retaining ring
5. Terminal
6. Connection head
7. Terminal block
8. Temperature sensor
9. Balancing resistor
10. Lead
11. Cold junction
12. Extension lead
13. Connection point
14. Thermocouple element with positive and negative legs
15. Measuring junction

Thermocouple element

Function

Measuring principle of the thermocouple element

If the measuring junction is exposed to a temperature different from that at the free ends of the thermocouple, a voltage (the thermoelectric voltage, Seebeck effect) is produced at these free ends. The magnitude of the thermoelectric voltage depends on the difference in temperature between the measuring junction and the free ends, and on the combination of materials in the thermocouple. Since a thermocouple always measures a temperature difference, the free ends of the thermocouple must be connected to a reference junction (cold junction) and held constant at a known temperature.

Calibration data for thermoelectric voltages and permissible deviations

The calibration data and the permissible deviations for commonly used thermocouples are defined isee Technical Data, Table "Calibration data for thermoelectric voltages and error limits").

The thermocouples Cu-CuNi and Fe-CuNi to DIN 43710 are used for replacement purposes. Thermocouples of class 2 are supplied as standard. For more accurate measurements, thermocouples are available with half the DIN tolerance or with a test certificate. The tolerances only apply to the condition upon delivery.

During operation at high temperatures, the tolerances of the thermocouples may change due to absorption of foreign matter, oxidation or evaporation of alloy components.

Mode of operation

The thermocouples are extended from the connection point to a point whose temperature is as constant as possible (the cold junction) by means of extension leads.

The extension leads have the same color code as the associated thermocouple elements; the positive pole is marked in red. Correct polarity must be ensured since otherwise large errors will occur. Up to 200 °C, the same calibration data and tolerances apply to the extension leads as to the corresponding thermo-couples.

The influence of temperature changes at the cold junction can be balanced by means of a compensating circuit, e.g. a compensating box. The reference temperature is 0 (32 °F) or 20 °C (68 °F).

It is also possible to keep the cold junctions at a constant temperature of 50, 60 or 70 °C (122, 140 or 158 °F) using a thermostat (for several measuring junctions).

The connections from the cold junction to the measuring or process instrument are made using copper leads. With energy-consuming instruments such as indicators or multipoint recorders, the complete measuring circuit (thermocouple, extension lead and copper lead) must be balanced in the operating condition using a resistor. SITRANS T transmitters and process recorders for connection to thermocouple elements have a built-in compensating circuit for balancing the effect of the ambient temperature on the cold junction. Lead balancing is not necessary in this case because of the high input impedance.

Protection fitting/Thermowells

The thermocouple can be protected against mechanical stress and chemical attack by a ceramic or metal thermowell, which may be mounted using flanges, screwed glands or by welding into the pipe or vessel. The thermocouple element terminates in the connection head.

Installation examples with specification of the recommended thermocouples and thermowell materials can be found under "Integration" in the "Installation examples" table.

Owing to the different operating conditions, no guarantee can be given for protective fittings. The manufacturer is responsible for damages and measuring errors caused by wrong installation in compliance with the General Terms of Delivery if the instruments have been installed by the manufacturer and if the specifications for the operating conditions furnished by the customer were correct and sufficiently detailed.

Thermocouple elements are very compatible since it is almost always possible to adapt them in shape and size to the particular problem. The temperature-responsive part is almost point-shaped. Thermocouple elements are therefore particularly suitable for measuring rapidly changing temperatures.

.

© Siemens 2020

Overview

The straight thermocouple together with a metal thermowell is suitable for temperatures from 0 to 1250 °C (32 to 2282 °F) and can be supplied with a built-in temperature transmitter.

Technical specifications

Thermocouples	Ni Cr/Ni type K
• Number	1 or 2
• Leg diameter	2 ... 3 mm (0.08 ... 0.12 inch)
• Insulation of legs	Insulating beads
Thermowell	Metal
Connection head	Form A; made of cast light alloy, with one cable bushing

Dimensional drawings

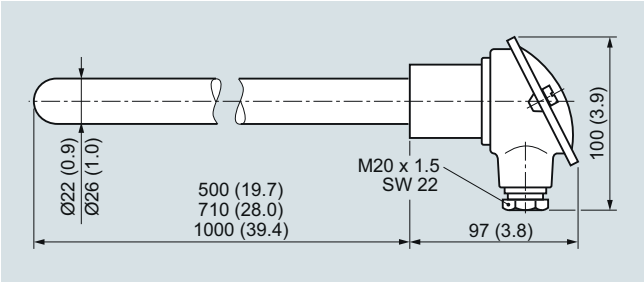

Straight thermocouple, dimensions in mm (inches)

Design

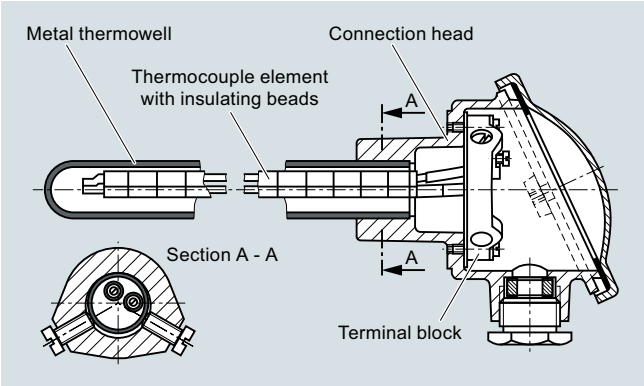

Straight thermocouple with base-metal element Ni Cr/Ni with metal thermowell

Selection and Ordering data

Selection and Ordering data	Article No.				
Straight thermocouple with Ni Cr/Ni thermocouple (type K) with metallic thermowell ↗ Click on the Article No. for the online configuration in the PIA Life Cycle Portal.	↗ **7MC2000 -**	■	■	**0**	■
Nominal length Enter customer specific length with Y44, see Order codes below					
300 ... 500 mm (11.81 ... 19.68 inch) Initial: 500 mm (19.68 inch)		**1**			
501 ... 710 mm (19.72 ... 27.95 inch) Initial: 710 mm (27.95 inch)		**2**			
711 ... 1 000 mm (27.11 ... 39.37 inch) Initial: 1 000 mm (39.37 inch)		**3**			
Thermowell					
to 1 000 °C (1 832 °F) X 10 CrAl 24, material No. 1.4762 Ø 22 mm x 2 mm (0.87 inch x 0.079 inch) Leg diameter 2 mm (0.08 inch)			**D**		
to 1 100 °C (2 012 °F) X 18 CrN28, material No. 1.4749 Ø 26 mm x 4 mm (1.02 inch x 0.16 inch) Leg diameter 3 mm (0.12 inch)			**E**		
to 1 200 °C (2 192 °F) X 15 CrNi Si 24 19, material No. 1.4841 Ø 22 mm x 2 mm (0.87 inch x 0.079 inch) Leg diameter 2 mm (0.08 inch)			**F**		
to 1 250 °C (2 282 °F) CrAl 205 (Kantal AF), material No. 1.4767 Ø 22 mm x 2 mm (0.87 inch x 0.079 inch) Leg diameter 3 mm (0.12 inch)			**H**		
Number of thermocouples					
1 thermocouple				**C**	
2 thermocouples				**D**	
Connection head, form A,					
made of cast light alloy, with 1 cable inlet and - screw cover					**1**
- high hinged cover					**6**

Selection and Ordering data

Selection and Ordering data	Order code
Straight thermocouple with Ni Cr/Ni thermocouple (type K) for temperatures to 1250 °C (2282 °F); with metallic thermowell	
Further designs Please add "**-Z**" to Article No. and specify Order code(s) and plain text.	
Special version, specify in plain text	**Y98**
Process number for special version	**Y99**
TAG plate made of stainless steel specify TAG No. in plain text	**Y15**
Calibration carried out at one point, specify desired temperature in plain text (order equivalent number of times for several calibration points).	**Y33**
Insertion length customer-specific Select range, enter desired length in plain text (No entry = standard length)	**Y44**

To order a temperature transmitter installed in the connection head, see "Temperature transmitters for installation in the connection head" (page 2/113).

Installation of a transmitter is only possible here in the versions with a high hinged cover (7MC2000-....6).

© Siemens 2020

Selection and Ordering data

Metal thermowells for straight thermocouples according to EN 50446

	Article No.
X 10 CrAl 24, material no. 1.4762	
∅ 22 x 2 mm (∅ 0.87 x 0.08 inch), 0.55 ... 1.10 kg (1.21 ... 2.42 lb), dished	
Nominal length/thermowell length in mm (inch):	
• 500 (19.7)/520 (20.5)	**7MC2900-1DA**
• 710 (28.0)/730 (28.7)	**7MC2900-2DA**
• 1 000 (39.4)/1 020 (40.2)	**7MC2900-3DA**
X 18 CrN28, material no. 1.4749	
∅ 26 x 4 mm (∅ 1.02 x 0.16 inch), 1.25 ... 2.20 kg (2.76 ... 4.85 lb), dished	
Nominal length/thermowell length in mm (inch):	
• 500 (19.7)/520 (20.5)	**7MC2900-1EC**
• 710 (28.0)/730 (28.7)	**7MC2900-2EC**
• 1 000 (39.4)/1 020 (40.2)	**7MC2900-3EC**
X 15 CrNiSi 25 20, material no. 1.4841	
∅ 22 x 2 mm (∅ 0.87 x 0.08 inch), 1.05 kg (2.31 lb), dished	
Nominal length/thermowell length in mm (inch):	
• 1 000 (39.4)/1 020 (40.2)	**7MC2900-3FA**
CrAl 205 (Kantal AF), material no. 1.4767	
∅ 22 x 2 mm (∅ 0.87 x 0.05 inch), 0.55 ... 1.10 kg (1.21 ... 2.42 lb)	
Nominal length/thermowell length in mm (inch):	
• 500 (19.7)/520 (20.5)	**7MC2900-1HA**
• 710 (28.0)/730 (28.7)	**7MC2900-2HA**
• 1 000 (39.4)/1 020 (40.2)	**7MC2900-3HA**

Thermocouple elements for straight thermocouples according to EN 50446

	Article No.
Base thermocouple with isolating pipe	
Wire diameter 3 mm (0.12 inch) Ni Cr/Ni, up to 1 000 °C (max. 1 300 °C), (up to 1 832 °F (max. 2 372 °F)) 0.55 ... 2.10 kg (1.21 ... 4.63 lb)	
Nominal length *L1*/Thermowell length *L2* in mm (inch):	
• 500 (19.7)/540 (21.3)	**7MC2903-1CA**
• 710 (28.0)/750 (29.5)	**7MC2903-2CA**
• 1 000 (39.4)/1 040 (40.9)	**7MC2903-3CA**

Connection heads for straight thermocouples

	Article No.
Connection head, type A (without terminal base and terminals), 1 cable entry, degree of protection IP53, 0.35 kg (0.77 lb)	
Light metal casting, screw-on cover, for thermowell diameter in mm (inch) (hole = thermowell diameter +0.5 mm) (0.02 inch)	
• 22 (0.87)	**7MC2905-1AA**
• 26 (1.02)	**7MC2905-1BA**
Light metal, high spring flap, for thermowell diameter in mm (inch) (hole = thermowell diameter +0.5 mm) (0.02 inch)	
• 22 (0.87)	**7MC2905-4AA**
• 26 (1.02)	**7MC2905-4BA**

Installation accessories for connection heads for straight thermocouples

- Terminal base
- Terminal
- Sealing rings
- Washer
- Stop flange
- Threaded sleeve

	Article No.
Terminal base without terminals for base thermocouples; 0.06 kg (0.13 lb)	**7MC2998-1AA**
Terminal for base thermocouples; 0.01 kg (0.02 lb)	**7MC2998-1BA**
Set of sealing rings (100 units) for the lid of the connection head; 0.01 kg (0.02 lb)	**7MC2998-1CA**
Set of washers (100 units) for the terminal base; 0.01 kg (0.02 lb)	**7MC2998-1CB**
Stop flange, adjustable, from GTW	
For thermowell outer diameter 22 mm (0.87 inch); 0.35 kg (0.77 lb)	**7MC2998-2CB**
For thermowell outer diameter 26 mm (1.02 inch); 0.32 kg (0.71 lb)	**7MC2998-2CC**
Threaded sleeve, gas-tight up to 1 bar (14.5 psi), adjustable, material no. 1.0718, with seal; 0.40 kg (0.88 lb)	
For thermowell outer diameter 22 mm (0.87 inch), **G1**	**7MC2998-2DB**
For thermowell outer diameter 26 mm (1.02 inch), **G1**	**7MC2998-2DC**

Dimensional drawings

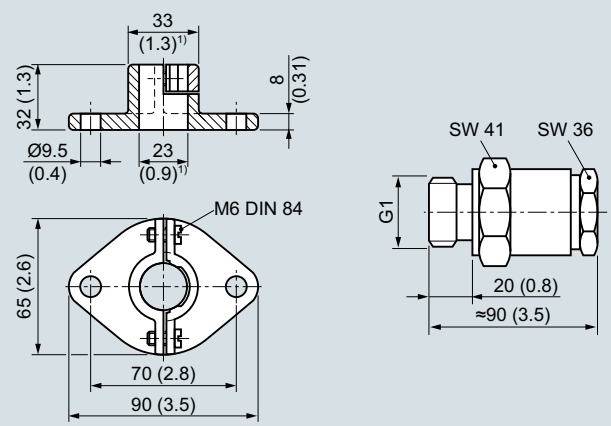

1) For thermowell diameter 22 mm (0.9 inch)

Mounting flange to DIN 43734 (left) and threaded sleeve (right) for installing straight thermocouples, dimensions in mm (inches)

© Siemens 2020

Overview

The following temperature transmitters are available for installation in the connection head::

SITRANS TH100

Programmable 2-wire temperature transmitter (4 to 20 mA), without galvanic isolation, only for Pt100 resistance thermometers.

SITRANS TH320

Programmable 2-wire temperature transmitter as a 4 to 20 mA version or with HART communication (4 to 20 mA), galvanic isolation. 1 sensor input for resistance thermometer and thermocouples.

SITRANS TH420

Programmable 2-wire temperature transmitter with HART communication (4 to 20 mA), galvanic isolation. 2 sensor inputs for resistance thermometers and thermocouples; therefore expanded functions such as hot backup (redundancy) and drift detection are possible..

SITRANS TH400

Temperature transmitter with PROFIBUS PA or FOUNDATION Fieldbus connection, electrical isolation for resistance thermometers and thermocouple elements.

Note:

- SITRANS TH100/TH320/TH420/TH400 can be fitted in the high hinged cover or instead of the terminal base. Retrofitting possible only in the high hinged cover.
- If using intrinsically-safe temperature sensors any installed temperature transmitters must also be intrinsically-safe..

Selection and Ordering Data

Detailed information on the transmitters can be found at the respective products under "Compact and head transmitters".

Transmitter to be fitted	Order code
To order the sensor with a built-in temperature transmitter, add "**-Z**" to the article number of the sensor, and supplement with the following order code:	
SITRANS TH100, input 1 x Pt100, 4 ... 20 mA	**T12**
SITRANS TH320, input 1 x universal, 4 ... 20 mA	**T24**
SITRANS TH320, input 1 x universal, HART	**T34**
SITRANS TH420, input 2 x universal, HART	**T35**
SITRANS TH400, input 1 x universal, PA	**T40**
SITRANS TH400, input 1 x universal, PA, Ex	**T41**
SITRANS TH400, input 1 x universal, FF	**T45**
SITRANS TH400, input 1 x universal, FF, Ex	**T46**
Customer-specific setting of the built-in transmitter (specify settings in plain text)	**Y11**

© Siemens 2020

Flue gas resistance thermometers, with connection head

Overview

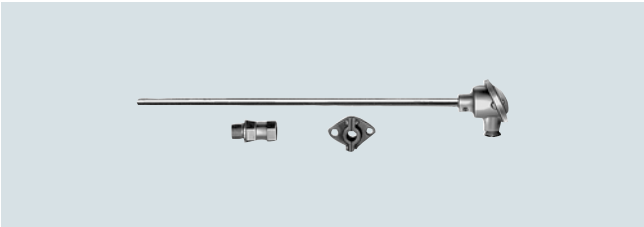

The flue gas resistance thermometer with connection head is suitable for the temperature range from -50 to +600 °C (-58 to +1112 °F) and can also be supplied with a built-in temperature transmitter.

Please order mounting flange or threaded sleeve separately.

Technical specifications

Design	According to DIN 43764: Thermometer without mount
Thermowell	
• Form	1, DIN 43772; cylindrical, 15 mm diameter (0.59 inch), wall thickness 3 mm (0.12 inch), seamless
• Material	St 35.8, mat. No. 1.0305, enamelled
• Loading capacity	1 bar (14.5 psi) above atmospheric, to DIN 43772
Measuring insert	Replaceable, with measuring insert tube (8 mm diameter (0.31 inch)) made of stainless steel; terminal block with clamping springs

Dimensional drawings

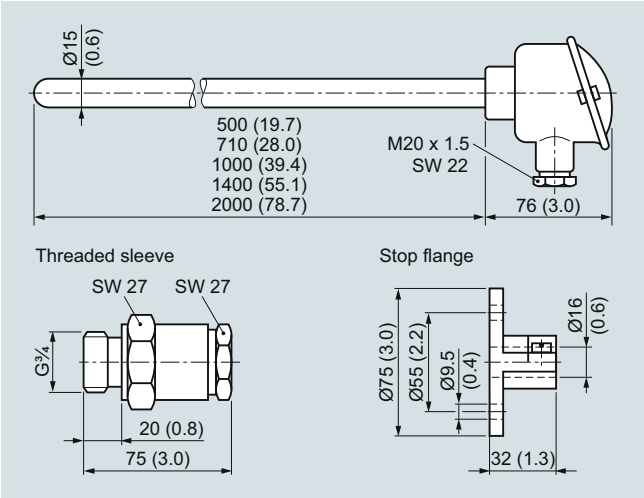

Flue gas resistance thermometer with connection head, dimensions in mm (inches)

Selection and Ordering data

	Article No.
Flue gas resistance thermometer Measuring resistor (winding) embedded in ceramic 1 Pt100 measuring resistor, 3-wire connection	
Mounting length/mm (inch):	
• 300 ... 500 mm: (11.8 ... 19.69 inch): Initial 500 mm (19.7 inch) ↗	**7MC1000 - 1BA2** ■
• 501 ... 710 mm: (19.72 ... 27.95 inch): Initial 710 mm (27.95 inch) ↗	**7MC1000 - 2BA2** ■
• 711 ... 1 000 mm: (28 ... 39.37 inch): Initial 1 000 mm (39.37 inch) ↗	**7MC1000 - 3BA2** ■
• 1 001 ... 1 400 mm: (39.41 ... 55.12 inch): Initial 1 400 mm (19.7 inch) ↗	**7MC1000 - 4BA2** ■
• 1 401 ... 2 000 mm: (55.16 ... 78.7 inch): Initial 2 000 mm (78.7 inch) ↗	**7MC1000 - 5BA2** ■
↗ Click on the Article No. for the online configuration in the PIA Life Cycle Portal.	
Connection head, form B, made of cast light alloy, with 1 cable inlet and	
• Screw cover	**1**
• Standard hinged cover	**4**
• High hinged cover	**6**
Further designs Please add "**-Z**" to Article No. and specify Order code(s) and plain text.	Order code
Special version, specify in plain text	**Y98**
Process number for special version	**Y99**
TAG plate made of stainless steel specify TAG No. in plain text	**Y15**
Calibration carried out at one point, specify desired temperature in plain text (order equivalent number of times for several calibration points).	**Y33**
Accessories	Article No.
Mounting flange Adjustable, to DIN 43734; Material: GTW 35, mat. No. 0.8035, for thermowell diameter 15 mm (0.59 inch), 0.3 kg (0.66 lb)	**7MC2998 - 5CA**
Gas-tight threaded sleeve Material: 9 SMnPb 28 Material No. 1.0718, for thermowell diameter 15 mm (0.59 inch), 0.4 kg (0.88 lb)	
• G¾ internal thread with gasket	**7MC2998 - 5DA**
• G½ internal thread with gasket	**7MC2998 - 5DC**

To order a temperature transmitter installed in the connection head and transmitters for SIL applications, see "Temperature transmitters for mounting in the connection head" (page 2/117).

Individual parts: Measuring inserts, see "Accessories".on page 2/117

© Siemens 2020

Overview

The resistance thermometer for damp rooms is suitable for a temperature range from -30 to +60 °C (-22 to +140 °F).

Technical specifications

Thermowell	Made of stainless steel
Connection head	Made of cast light alloy, with cable bushing; made of plastic on request
Measuring insert	1 or 2 Pt measuring resistors to DIN EN 60751, connection in 2 or 3-wire connection, class B
Degree of protection	IP65 acc. to DIN EN 60529

Dimensional drawings

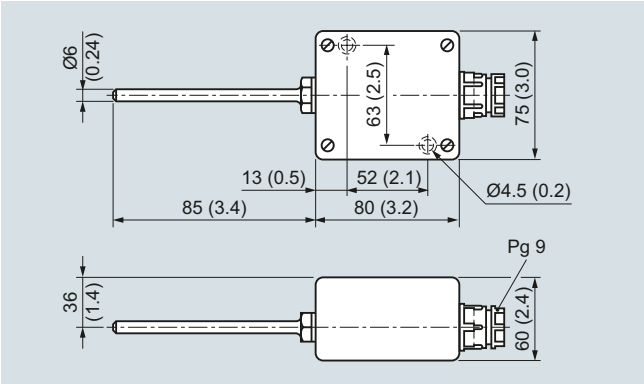

Resistance thermometer for damp rooms, dimensions in mm (inches)

Selection and Ordering data

	Article No.
Resistance thermometer for damp rooms Stainless steel thermowell	
• with one Pt100 measuring resistor 0.1 kg (0.22 kg)	**7MC1027-1AA**
• with two Pt100 measuring resistors 0.1 kg (0.22 kg)	**7MC1027-1AB**
Further designs Please add "-**Z**" to Article No. and specify Order code(s) and plain text.	Order code
Special version, specify in plain text	**Y98**
Process number for special version	**Y99**
TAG plate made of stainless steel specify TAG No. in plain text	**Y15**
Calibration carried out at one point, specify desired temperature in plain text (order equivalent number of times for several calibration points).	**Y33**

To order a temperature transmitter installed in the connection head and transmitters for SIL applications, see "Temperature transmitters for mounting in the connection head" (page 2/117).

Note:

Additional fitting of head mounted transmitter of SITRANS TH series is possible.

© Siemens 2020

Dimensional drawings

Connection head type B for SITRANS TS500

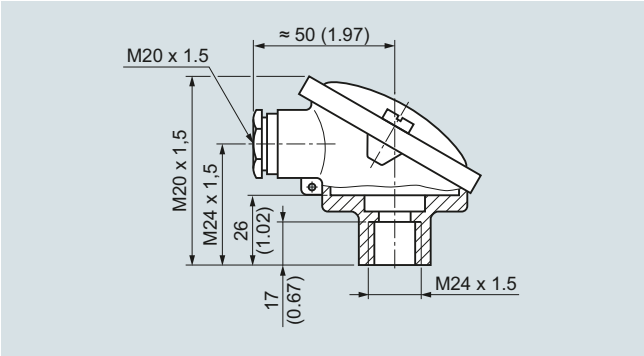

Connection head, Type B, degree of protection IP54, made of aluminium, with screw cover, dimensions in mm (inches)

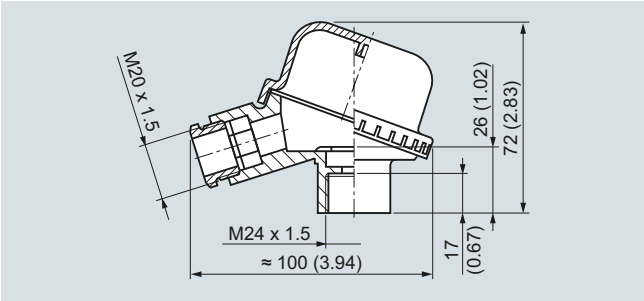

Connection head, Type B, degree of protection IP54, made of plastic, with screw cover, dimensions in mm (inches)

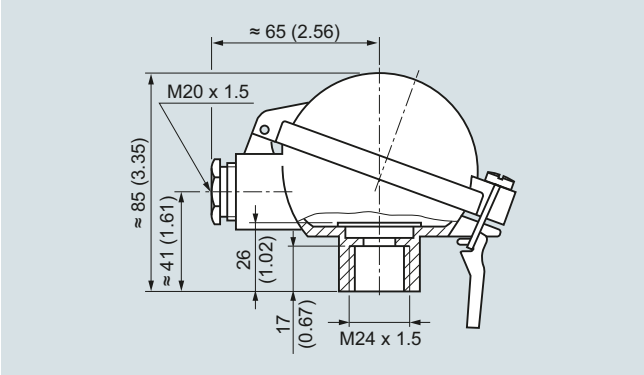

Connection head, Type B, degree of protection IP65, made of aluminium, with standard hinged cover, dimensions in mm (inches)

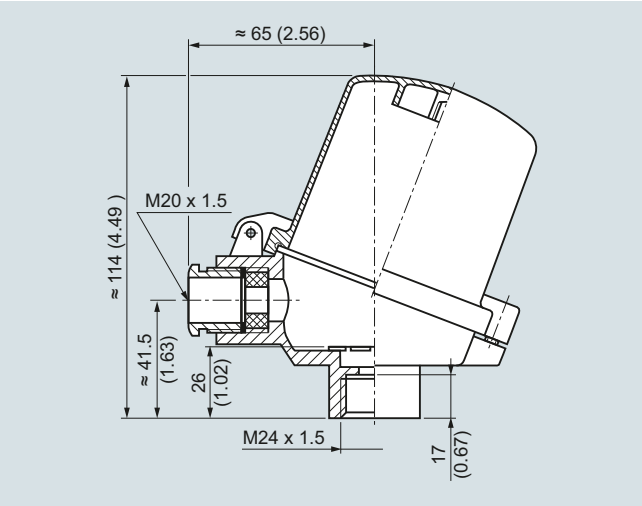

Connection head, Type B, degree of protection IP65, made of aluminium, with high hinged cover, dimensions in mm (inches)

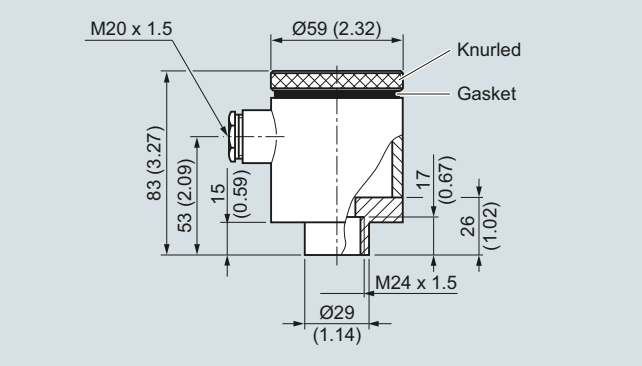

Connection head, Type B-VA, degree of protection IP65, made of stainless steel, with screw cover, dimensions in mm (inches)

Connection heads type B for SITRANS TS500 (accessory resistance thermometer)

	Article No.
Degree of protection IP54	
Connection head type: similar to BA0; aluminum; flange cover	**7MC1907-1BA**
Connection head type: similar to BM0; plastic; screw cover	**7MC1907-1BK**
Degree of protection IP65	
Connection head type: similar to BB0; aluminum; small spring flap	**7MC1907-1BF**
Connection head type: similar to BC0; aluminum; high spring flap	**7MC1907-1BL**
Connection head type: B-VA, stainless steel	**7MC1907-1BV**
Quick-release lock for connection heads BB0, BC0, degree of protection of connection head reduced to IP20, weight: 0.02 kg (0.04 lb)	**7MC1907-1BS**

© Siemens 2020

Overview

SITRANS TH100 Slim is particularly suited for the production of compact thermometers with integrated transmitter.

Its cylindrical stainless steel enclosure is simply welded to the basic body of the compact thermometer.

Its compact design makes the SITRANS TH100 Slim the ideal solution for manufacturers from a wide variety of industries.

For the parameterization, the SIPROM T software is used in combination with the modem for SITRANS TH100/TH200.

Benefits

- Transmitter in 2-wire system with M12 device plug for mounting on compact thermometer.
- Solution for easy and space-saving temperature measurements in a variety of industries.
- Programmable; as a result, the sensor connection, measuring range and much more are programmable.

Application

The SITRANS TH100 Slim transmitter can be used in combination with Pt100 compact resistance thermometers for temperature measurement in all industries. Thanks to its compact design, it can be mounted to all kinds of designs.

The output signal is a load-independent direct current of 4 to 20 mA which is proportional to the temperature.

Parameterization is implemented over the PC using the parameterization software SIPROM T and the modem for SITRANS TH100/TH200. If you already have a "Modem for SITRANS TK" (article number 7NG3190-6KB), you can continue to use this for parameterization of the SITRANS TH100.

Function

Mode of operation

The measured signal supplied by a Pt100 resistance thermometer (2, 3 or 4-wire connection) is amplified in the input stage. The voltage, which is proportional to the input variable, is then converted into digital signals by a multiplexer in an analog-to-digital converter. They are converted in the microcontroller in accordance with the sensor characteristic and additional parameters (measuring range, damping, ambient temperature, etc.).

The signal prepared in this way is converted in an analog-to-digital converter into a load-independent direct current of 4 to 20 mA.

An EMC filter protects the input and output circuits against electromagnetic interferences.

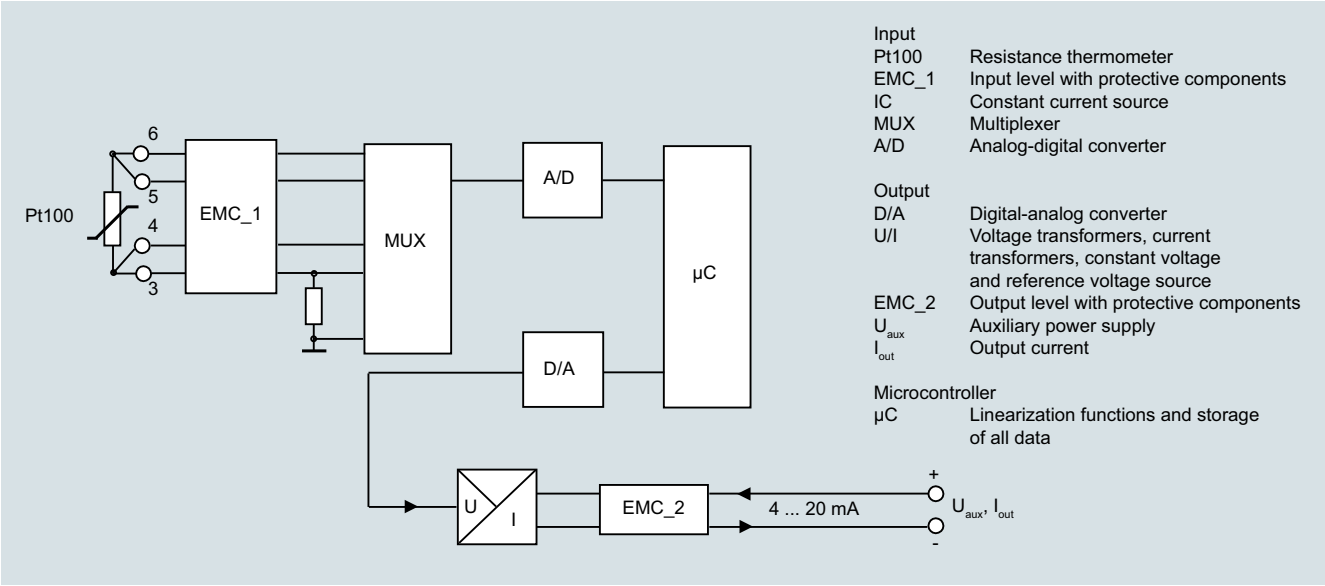

SITRANS TH100 Slim, function block diagram

© Siemens 2020

Technical specifications

Input	
Resistance thermometer	
Measured variable	Temperature
Input type	Pt100 according to IEC 60751
Characteristic curve	Temperature-linear
Type of connection	2, 3, 4-wire connection
Resolution	14 bit
Measuring accuracy	< 0.25 °C (0.45 °F)
Repeatability	< 0.1 °C (0.18 °F)
Measuring current	Approx. 0.4 mA
Measuring cycle	< 0.7 s
Measuring range	-60 ... +160 °C (-76 ... +320 °F)
Measuring span	25 ... 220 °C (45 ... 396 °F)
Unit	°C or °F
Offset	Programmable: -100 ... +100 °C (-180 ... +180 °F)
Wire resistance	Max. 20 Ω (total from feeder and return conductor)
Noise rejection	50 and 60 Hz
Output	
Output signal	4 ... 20 mA, 2-wire
Auxiliary power	8.5 ... 36 V DC (30 V for Ex)
Max. load	$(U_{aux} – 8.5 V)/0.023 A$
Overrange	3.6 ... 23 mA, infinitely adjustable (factory setting: 3.84 ... 20.5 mA)
Error signal (in the event of sensor breakage)	3.6 ... 23 mA, infinitely adjustable (factory setting: 3.6 mA or 22.8 mA)
Damping time	0 ... 30 s
Protection	Against reverse polarity
Resolution	12 bit
Accuracy at 23 °C (73.4 °F)	< 0.1% of measuring span
Temperature effect	< 0.13 %/10 °C (0.13 %/18 °F)
Effect of auxiliary power	< 0.02 % of span/V
Effect of load impedance	< 0.055 % of max. span/100 Ω
Long-term drift	• < 0.025% of the max. span in the first month • < 0.035% of the max. span after one year • < 0.05% of the max. span after 5 years
Ambient conditions	
Ambient temperature range	-40 ... +85 °C (-40 ... +185 °F)
Storage temperature range	-40 ... +85 °C (-40 ... +185 °F)
Relative humidity	98 %, with condensation
Electromagnetic compatibility	According to EN 61326 and NAMUR NE21
Design	
Weight	42 g
Dimensions	See dimensional drawing
Material	316L stainless steel
Degree of protection according to IEC 60529	
• Enclosure	IP67

Software requirements for SIPROM T	
PC operating system	Windows ME, 2000 and XP; also Windows 95, 98 and 98SE, but only in connection with RS232 modem

Factory setting:
- Pt100 (IEC 751) in the 3-wire connection
- Measuring range: 0 ... 100 °C (32 ... 212 °F)
- Fault current in the event of sensor breakage: 22.8 mA
- Sensor offset: 0 °C (0 °F)
- Damping 0.0 s

Selection and ordering data

	Article No.
SITRANS TH100 Slim temperature transmitters for Pt100 For welding to compact thermometers 2-wire system, 4 ... 20 mA, programmable, without galvanic isolation	
• Without explosion protection	**7NG3150-0NN00**
Accessories	
Modem	
Modem with USB interface and SIPROM T software	**7NG3092-8KN**

© Siemens 2020

Dimensional drawings

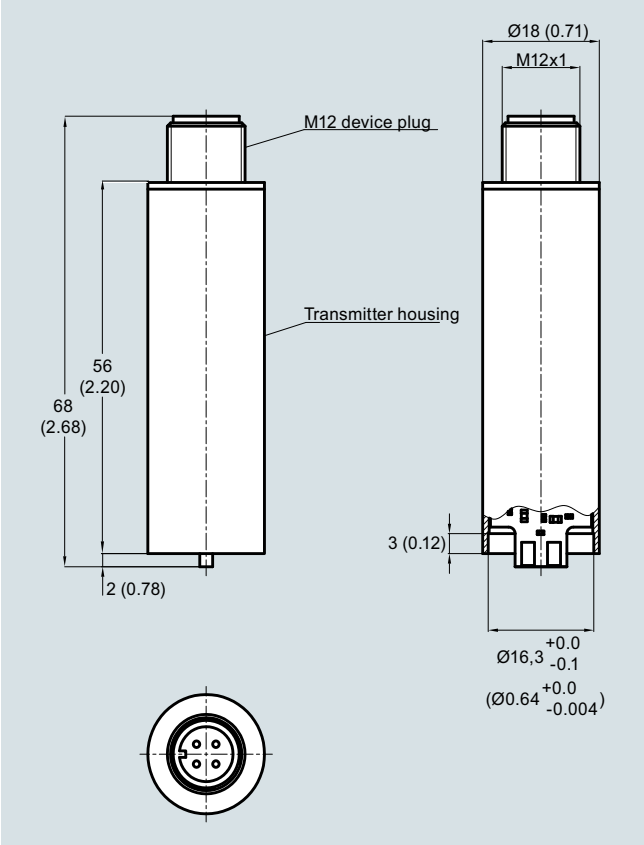

SITRANS TH100 Slim, dimensions in mm (inch)

Circuit diagrams

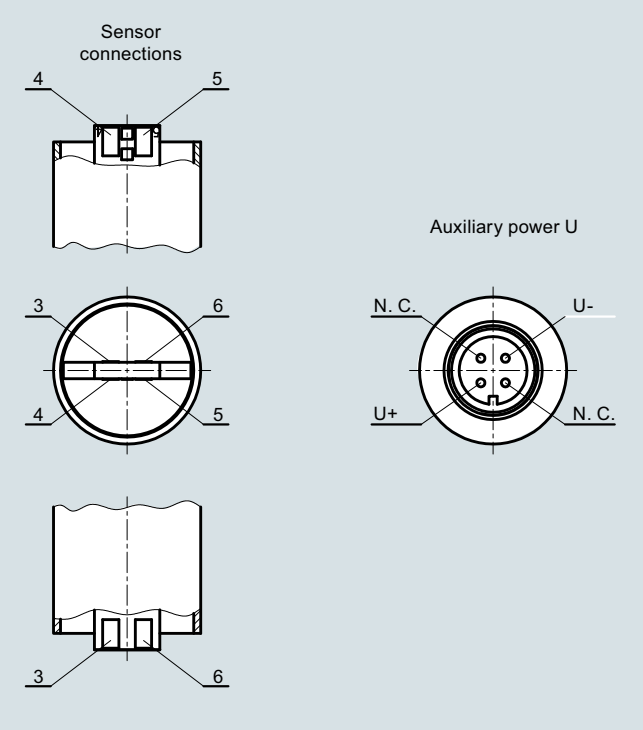

SITRANS TH100 Slim, auxiliary power and sensor connection

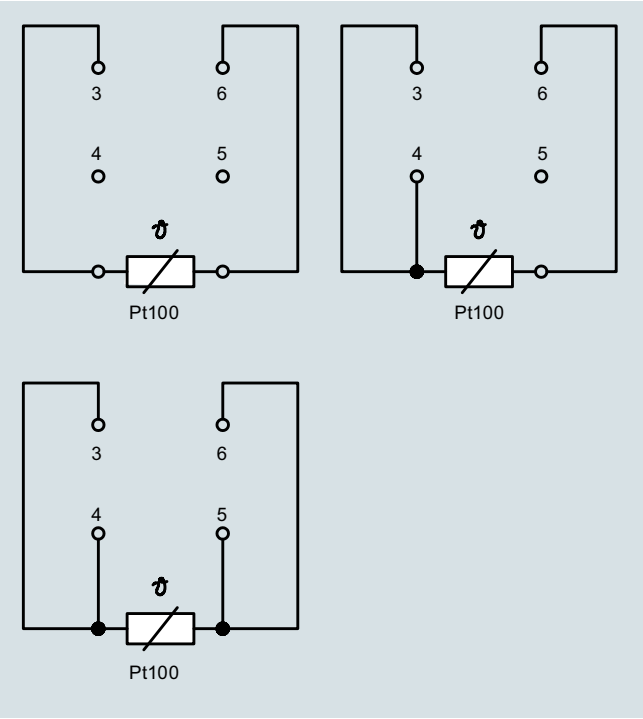

SITRANS TH100 Slim, sensor connection assignment

© Siemens 2020

SITRANS TH100 (4 to 20 mA, Pt100)

Overview

The SITRANS TH100, which represents an economical alternative by dispensing with galvanic isolation and universal sensor connection, is ideally suited for Pt100 measurements.

For the parameterization, the SIPROM T software is used in combination with the modem for SITRANS TH100/TH200.

Its compact design makes the SITRANS TH100 suitable for retrofitting measuring points or replacing analog transmitters.

The transmitter is available in a non-Ex version and in a version suitable for use in hazardous areas.

Benefits

- Transmitter with 2-wire system
- Mounting in connection head, type B or larger or on DIN rail
- Programmable; as a result, the sensor connection, measuring range and much more are programmable
- Intrinsically safe version for use in hazardous areas

Application

The SITRANS TH100 transmitter can be used for temperature measurement with Pt100 resistance thermometers in all industries. Its compact size means that it can be installed in connection heads of type B or larger.

The output signal is a load-independent direct current of 4 to 20 mA which is proportional to the temperature.

Parameterization is implemented over the PC using the parameterization software SIPROM T and the modem for SITRANS TH100/TH200. If you already have a "Modem for SITRANS TK" (article number 7NG3190-6KB), you can continue to use this for parameterization of the SITRANS TH100.

Transmitters of the "intrinsically safe" type of protection can be installed within potentially explosive atmospheres. The devices meet the directive 2014/34/EU (ATEX) as well as the FM and CSA requirements.

Function

Mode of operation

The measured signal supplied by a Pt100 resistance thermometer (2, 3 or 4-wire connection) is amplified in the input stage. The voltage, which is proportional to the input variable, is then converted into digital signals by a multiplexer in an analog-to-digital converter. They are converted in the microcontroller in accordance with the sensor characteristic and further parameters (measuring range, damping, ambient temperature, etc.).

The signal prepared in this way is converted in an analog-to-digital converter into a load-independent direct current of 4 to 20 mA.

An EMC filter protects the input and output circuits against electromagnetic interferences.

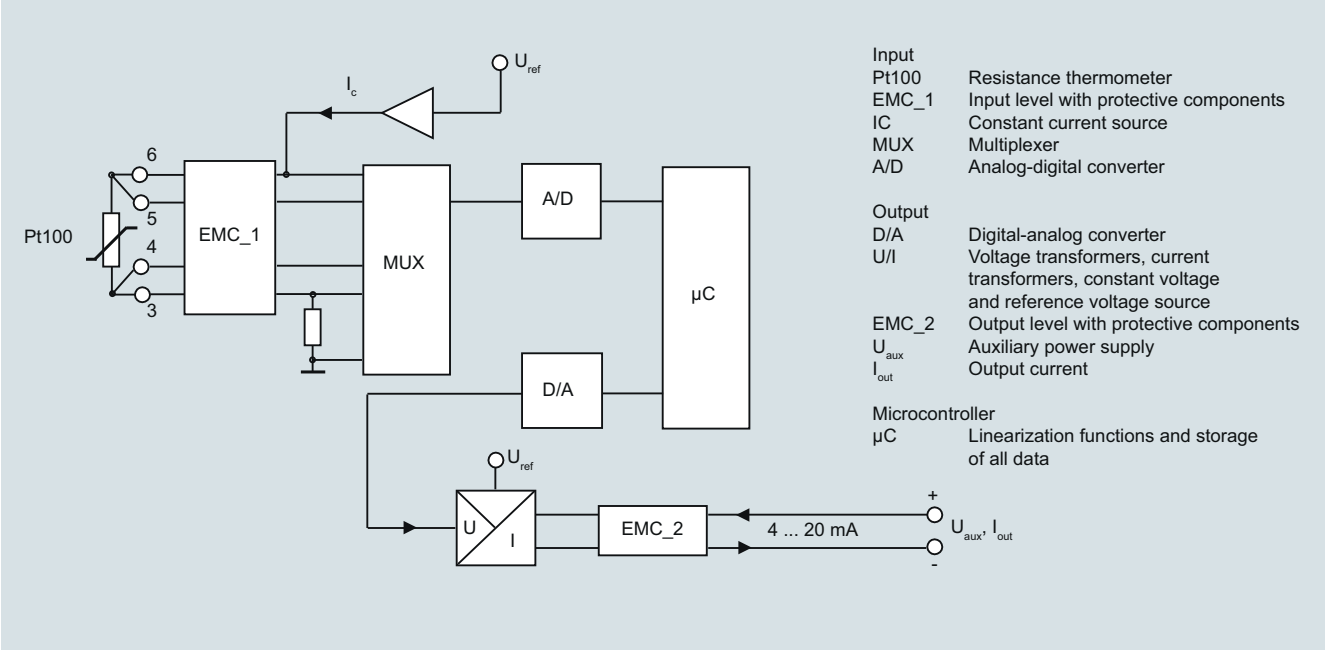

SITRANS TH100, function block diagram

© Siemens 2020

Technical specifications

Input	
Resistance thermometer	
Measured variable	Temperature
Input type	Pt100 according to IEC 60751
Characteristic curve	Temperature-linear
Type of connection	2, 3, 4-wire connection
Resolution	14 bit
Measuring accuracy	
• Span <250 °C (450 °F)	< 0.25 °C (0.45 °F)
• Span >250 °C (450 °F)	< 0.1% of measuring span
Repeatability	< 0.1 °C (0.18 °F)
Measuring current	approx. 0.4 mA
Measuring cycle	< 0.7 s
Measuring range	-200 ... +850 °C (-328 ... +1562 °F)
Measuring span	25 ... 1050 °C (77 ... 1922 °F)
Unit	°C or °F
Offset	Programmable: -100 ... +100 °C (-180 ... +180 °F)
Wire resistance	Max. 20 Ω (total from feeder and return conductor)
Noise rejection	50 and 60 Hz
Output	
Output signal	4 ... 20 mA, 2-wire
Auxiliary power	8.5 ... 36 V DC (30 V with Ex ia and ib; 32 V with Ex nL/ic; 35 V with Ex nA)
Max. load	$(U_{aux} – 8.5 V)/0.023 A$
Overrange	3.6 ... 23 mA, infinitely adjustable (default range: 3.84 ... 20.5 mA)
Error signal (following sensor fault) (conforming to NE43)	3.6 ... 23 mA, infinitely adjustable (default range: 3.6 mA or 22.8 mA)
Damping time	0…30 s (default value: 0 s)
Protection	Against reverse polarity
Resolution	12 bit
Accuracy at 23 °C (73.4 °F)	< 0.1% of measuring span
Temperature effect	< 0.1 %/10 °C (0.1 %/18 °F)
Effect of auxiliary power	< 0.01 % of span/V
Effect of load impedance	< 0.025 % of max. span/100 Ω
Long-term drift	• < 0.025% of the max. span in the first month • < 0.035% of the max. span after one year • < 0.05% of the max. span after 5 years
Ambient conditions	
Ambient temperature	-40 ... +85 °C (-40 ... +185 °F)
Storage temperature	-40 ... +85 °C (-40 ... +185 °F)
Relative humidity	< 98 %, with condensation
Electromagnetic compatibility	According to EN 61326 and NAMUR NE21
Design	
Weight	50 g
Dimensions	See dimensional drawing
Material	Molded plastic
Cross-section of cables	Max. 2.5 mm^2 (AWG 13)
Degree of protection according to IEC 60529	
• Enclosure	IP40
• Terminals	IP00

Certificates and approvals	
Explosion protection ATEX	
EC type-examination certificate	PTB 05 ATEX 2049X
• "Intrinsic gas safety" type of protection	II 1 G Ex ia IIC T6/T4 II (1) 2 G Ex ib [ia Ga] IIC T6/T4 Gb II (1) 3 G Ex ic [ia Ga] IIC T6/T4 Gc II 3 G Ex ic IIC T6/T4 Gc
• "Non-sparking" type of protection	II 3 G Ex nA IIC T6/T4 Gc II 3 G Ex nA [ic] IIC T6/T4 Gc
• "Intrinsic dust safety" type of protection	II 1 D Ex ia IIIC T115 °C Da
Explosion protection: FM for USA	
• FM approval	FM 3024169
• Degrees of protection	IS / Cl I, II, III / Div 1 / GP ABCDEFG T6, T5, T4 Cl I / ZN 0 / AEx ia IIC T6, T5, T4 NI / Cl I / Div 2 / GP ABCDFG T6, T5, T4 NI / Cl I / ZN 2 / IIC T6, T5, T4
Explosion protection to FM for Canada ($_cFM_{US}$)	
• FM approval	FM 3024169C
• Degrees of protection	IS / Cl I, II, III / Div 1/ GP ABCDEFG T6, T5, T4 NI / Cl I / DIV 2 / GP ABCD T6, T5, T4 NIFW / Cl I, II, III / DIV 2 / GP ABCDFG T6, T5, T4 DIP / Cl II, III / Div 2 / GP FG T6, T5, T4 Cl I / ZN 0 / Ex ia IIC T6, T5, T4 Cl I / ZN 2 / Ex nA nL IIC T6, T5, T4
Other certificates	EAC Ex(GOST), NEPSI
Software requirements for SIPROM T	
PC operating system	Windows ME, 2000, XP, Win 7 and Win 8; in connection with RS 232 modem, also Windows 95, 98 and 98SE

Factory setting:
- Pt100 (IEC 751) in the 3-wire connection
- Measuring range: 0 ... 100 °C (32 ... 212 °F)
- Fault current in the event of sensor breakage: 22.8 mA
- Sensor offset: 0 °C (0 °F)
- Damping 0.0 s

© Siemens 2020

Selection and ordering data

	Article No.
SITRANS TH100 Head transmitter for Pt100 For installation in connection head type B, 2-wire system 4 ... 20 mA, programmable, without galvanic isolation	
Without explosion protection	**7NG3211-0NN00**
With explosion protection "Intrinsic safety" type of protection and for zone 2	
• According to ATEX	**7NG3211-0AN00**
• According to FM ($_{C}FM_{US}$)	**7NG3211-0BN00**

Options	Order code
Append suffix "**-Z**" to article no., add order code and plain text, if applicable.	
Test report (5 measuring points)	**C11**
Customer-specific programming	
Measuring range to be set Specify in plain text (max. 5 digits): Y01:... to ... °C, °F	**Y01**[1)]
Measuring point number (TAG) max. 8 characters	**Y17**[2)]
Measuring point description, max. 16 characters	**Y23**[2)]
Pt100 (IEC) 2-wire, R_L = 0 Ω	**U02**[3)]
Pt100 (IEC) 3-wire	**U03**[3)]
Pt100 (IEC) 4-wire	**U04**[3)]
Enter special deviating customer-specific setting in plain text	**Y09**[4)]
Fault current 3.6 mA (instead of 22.8 mA)	**U36**[2)]

1) For customer-specific programming for RTD and TC, the start value and the end value of the required measuring span must be specified here.

2) For this selection, Y01 or Y09 must also be selected.

3) For this selection, Y01 must also be selected.

4) For customer-specific programming for mV and ohm, the start value and the end value of the required measuring span and the unit must be entered here.

Accessories

	Article No.
Additional accessories for assembly, connection and transmitter configuration, see page 2/251.	
Modem Modem with USB interface and SIPROM T software	**7NG3092-8KN**
Mounting rail adapter for head transmitter (Quantity delivered: 5 units)	**7NG3092-8KA**
Connecting cable 4-wire, 200 mm (7.87 inch), for sensor connections when using head transmitters in the high hinged cover (set with 5 units)	**7NG3092-8KC**

For supply units, see Catalog FI01 section "Supplementary components"

Ordering example:

7NG3211-0NN00-Z Y01+Y23+U03

Y01: -10 ... +100 °C

Y23: TICA1234HEAT

Factory setting:

- Pt100 (IEC 751) in the 3-wire connection
- Measuring range: 0 … 100 °C (32 … 212 °C)
- Fault current in the event of sensor breakage: 22.8 mA
- Sensor offset: 0 °C (0 °F)
- Damping 0.0 s

© Siemens 2020

Dimensional drawings

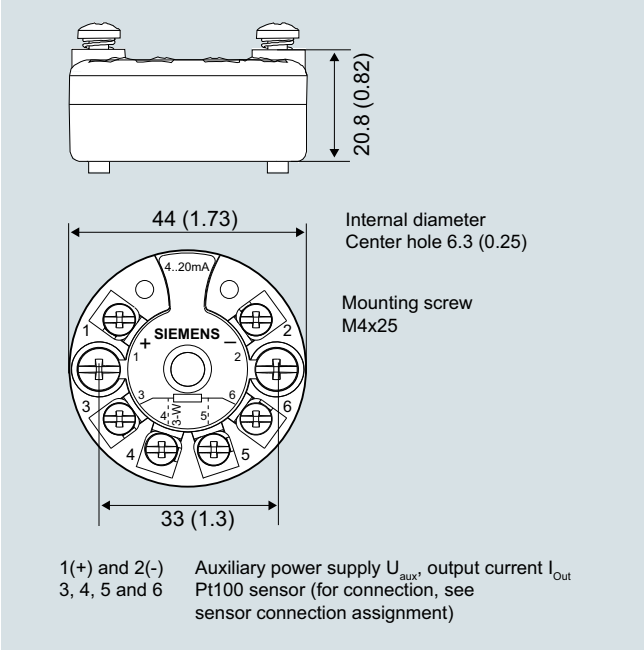

SITRANS TH100, dimensions in mm (inch)

Mounting on DIN rail

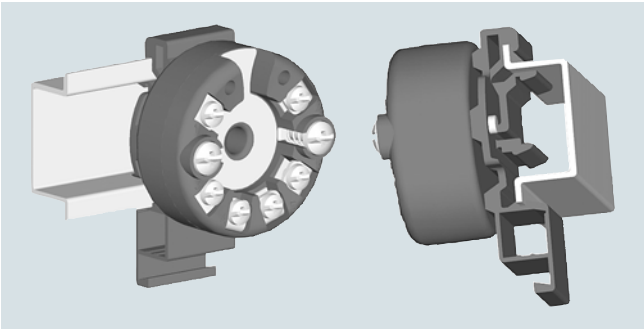

SITRANS TH100, mounting of transmitter on DIN rail

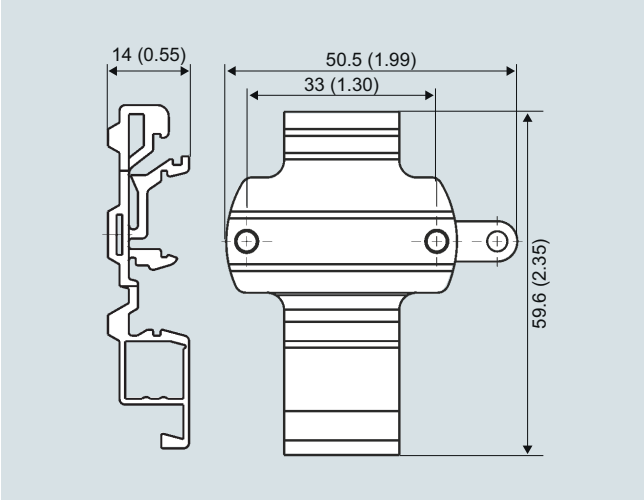

DIN rail adapter, dimensions in mm (inch)

Circuit diagrams

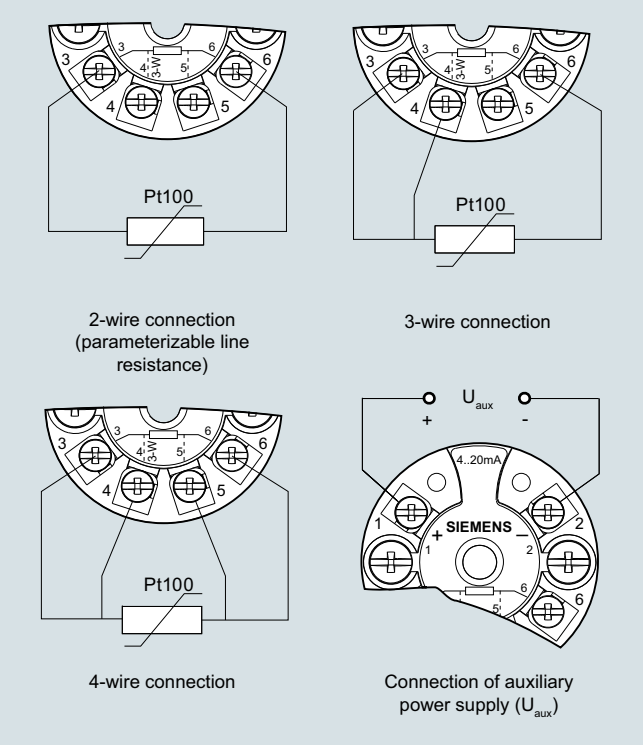

SITRANS TH100, sensor connection assignment

© Siemens 2020

Overview

Ultra flexible - with the universal SITRANS TH200 transmitter

- 2-wire device for 4 to 20 mA
- Mounting in the connection head of the temperature sensor
- Universal input for virtually any type of temperature sensor
- Configurable over PC

Benefits

- Compact design
- Flexible mounting and center hole allow you to select your preferred type of installation
- Galvanic isolation
- Test sockets for multimeters
- Diagnostics LED (green/red)
- Sensor monitoring
  open circuits and short-circuits
- Self-monitoring
- Configuration status stored in EEPROM
- SIL2 (with order note C20), SIL2/3 (with C23)
- Expanded diagnostic functions, such as slave pointer, operating hours counter, etc.
- Special characteristic
- Electromagnetic compatibility to EN 61326 and NE21

Application

SITRANS TH200 transmitters can be used in all industrial sectors. Its compact size means that it can be installed in connection heads of type B or larger. The following sensors/signal sources can be connected over their universal input module:

- Resistance thermometer (2, 3, 4-wire connection)
- Thermocouples
- Resistance-based sensors and DC voltage sources

The output signal is a direct current from 4 to 20 mA in accordance with the sensor characteristic.

Transmitters of the "intrinsically safe" type of protection can be installed within potentially explosive atmospheres. The devices meet the directive 2014/34/EU (ATEX) as well as the FM and CSA requirements.

Function

The SITRANS TH200 is configured over a PC. A USB or RS 232 modem is linked to the output terminals for this purpose. The configuration data can now be edited using the SIPROM T software tool. The configuration data are then permanently stored in the non-volatile memory (EEPROM).

Once the sensors and power supply have been correctly connected, the transmitter outputs a temperature-linear output signal and the diagnostics LED displays a green light. In the case of a sensor break, the LED flashes red, an internal device fault is indicated by a steady red light.

The test socket can be used to connect an ammeter at any time for monitoring purposes and plausibility checks. The output current can be read without any interruption, or even without opening the current loop.

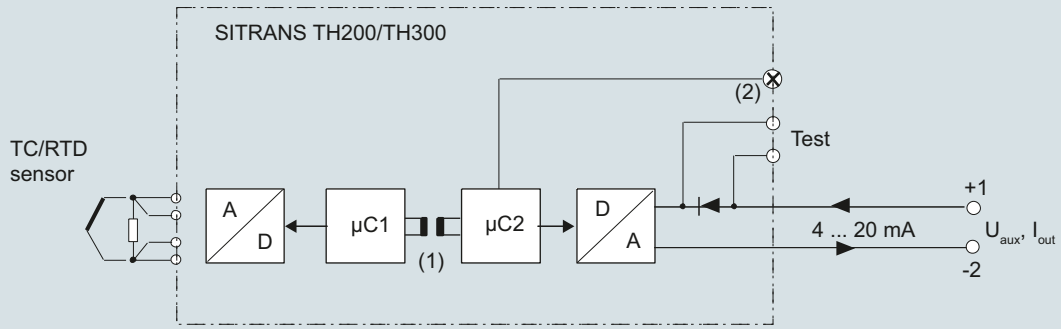

Input		Output			
A/D	Analog-digital converter	µC2	Microcontroller, primary circuit	(1)	Electrically isolated
Sensors	Resistance thermometer, thermocouple, resistance-based sensor, mV sensor	D/A	Digital-analog converter	(2)	LED
		U_{aux}	Auxiliary power supply		
µC1	Microcontroller, secondary circuit	I_{out}	Output current		

SITRANS TH200 function diagram

© Siemens 2020

Technical specifications

Input	
Resistance thermometer	
Measured variable	Temperature
Sensor type	
• According to IEC 60751	Pt25 … Pt1000
• Acc. to JIS C 1604; a = 0.00392 K^{-1}	Pt25 … Pt1000
• According to IEC 60751	Ni25 … Ni1000
• Special type	Via special characteristic (max. 30 points)
Sensor factor	0.25 ... 10 (adaptation of the basic type, e.g. Pt100 to version Pt25 ... 1000)
Units	°C or °F
Connection	
• Standard connection	1 resistance thermometer (RTD) in 2-wire, 3-wire or 4-wire connection
• Averaging	2 identical resistance thermometers in 2-wire connection for generation of average temperature
• Differentiation	2 identical resistance thermometers (RTD) in 2-wire connection (RTD 1 – RTD 2 or RTD 2 – RTD 1)
Connection	
• 2-wire connection	Line resistance can be configured ≤100 Ω (loop resistance)
• 3-wire connection	No trim necessary
• 4-wire connection	No trim necessary
Sensor current	≤ 0.45 mA
Response time	≤ 250 ms for 1 sensor with break monitoring
Break monitoring	Always active (cannot be switched off)
Short-circuit monitoring	Can be switched on/off (default value: ON)
Measuring range	Assignable (see "Digital measuring error" table)
Min. measuring span	10 °C (18 °F)
Characteristic curve	Temperature-linear or special characteristic
Resistance-based sensor	
Measured variable	Actual resistance
Sensor type	Resistance-based, potentiometers
Units	Ω
Connection	
• Standard connection	1 resistance-based sensor (R) in 2-wire, 3-wire or 4-wire connection
• Averaging	2 resistance-based sensors in 2-wire connection for averaging
• Differentiation	2 resistance thermometers in 2-wire connection (R1 – R2 or R2 – R1)
Connection	
• 2-wire connection	Line resistance can be configured ≤100 Ω (loop resistance)
• 3-wire connection	No trim necessary
• 4-wire connection	No trim necessary
Sensor current	≤ 0.45 mA
Response time	≤ 250 ms for 1 sensor with break monitoring
Break monitoring	Always active (cannot be switched off)
Short-circuit monitoring	Can be switched on/off (default value: OFF)
Measuring range	Assignable max. 0 ... 2200 Ω (see "Digital measuring error" table)
Min. measuring span	5 Ω … 25 Ω (see "Digital measuring error" table)
Characteristic curve	Resistance-linear or special characteristic

Thermocouples	
Measured variable	Temperature
Sensor type (thermocouples)	
• Type B	Pt30Rh-Pt6Rh acc. to IEC 584
• Type C	W5%-Re acc. to ASTM 988
• Type D	W3%-Re acc. to ASTM 988
• Type E	NiCr-CuNi acc. to IEC 584
• Type J	Fe-CuNi acc. to IEC 584
• Type K	NiCr-Ni acc. to IEC 584
• Type L	Fe-CuNi acc. to DIN 43710
• Type N	NiCrSi-NiSi acc. to IEC 584
• Type R	Pt13Rh-Pt acc. to IEC 584
• Type S	Pt10Rh-Pt acc. to IEC 584
• Type T	Cu-CuNi acc. to IEC 584
• Type U	Cu-CuNi acc. to DIN 43710
Units	°C or °F
Connection	
• Standard connection	1 thermocouple (TC)
• Averaging	2 thermocouples (TC)
• Differentiation	2 thermocouples (TC) (TC1 – TC2 or TC2 – TC1)
Response time	≤ 250 ms for 1 sensor with break monitoring
Break monitoring	Can be switched off
Reference junction compensation	
• Internal	With integrated Pt100 resistance thermometer
• External	With external Pt100 IEC 60751 (2-wire or 3-wire connection)
• External fixed	Reference junction temperature can be set as fixed value
Measuring range	Assignable (see "Digital measuring error" table)
Min. measuring span	Min. 40 ... 100 °C (72 ... 180 °F) (see "Digital measuring error" table)
Characteristic curve	Temperature-linear or special characteristic
mV sensor	
Measured variable	DC voltage
Sensor type	DC voltage source (DC voltage source possible over an externally connected resistor)
Units	mV
Response time	≤ 250 ms for 1 sensor with break monitoring
Break monitoring	Can be switched off
Measuring range	-10 ... +70 mV -100 … +1100 mV
Min. measuring span	2 mV or 20 mV
Overload capability of the input	-1.5 ... +3.5 V DC
Input resistance	≥ 1 MΩ
Characteristic curve	Voltage-linear or special characteristic

© Siemens 2020

SITRANS TH200 (4 to 20 mA, universal)

Output	
Output signal	4 ... 20 mA, 2-wire
Auxiliary power	11 ... 35 V DC (to 30 V with Ex ia and ib; to 32 V with Ex nA/nL/ic)
Max. load	$(U_{aux} - 11\ V)/0.023\ A$
Overrange	3.6 ... 23 mA, infinitely adjustable (default range: 3.80 mA ... 20.5 mA)
Error signal (e.g. following sensor fault) (conforming to NE43)	3.6 ... 23 mA, infinitely adjustable (default value: 22.8 mA)
Sample cycle	0.25 s nominal
Damping	Software filter 1st order 0 ... 30 s (parameterizable)
Protection	Against reverse polarity
Galvanic isolation	Input against output 2.12 kV DC (1.5 kV_{rms} AC)
Measuring accuracy	
Digital measuring error	See "Digital measuring error" table
Reference conditions	
• Auxiliary power	24 V ± 1 %
• Load	500 Ω
• Ambient temperature	23 °C
• Warming-up time	> 5 min
Error in the analog output (digital/analog converter)	< 0.025 % of measuring span
Error due to internal reference junction	< 0.5 °C (0.9 °F)
Effect of ambient temperature	
• Analog measuring error	0.02 % of meas. span/10 °C (18 °F)
• Digital measuring error	
- with resistance thermometers	0.06 °C (0.11 °F)/10°C (18 °F)
- with thermocouples	0.6 °C (1.1 °F)/10°C (18 °F)
Auxiliary power effect	< 0.001 % of meas. span/V
Effect of load impedance	< 0.002 % of meas. span/100 Ω
Long-term drift	
• In the first month	• < 0.02 % of measuring span
• After one year	• < 0.2 % of measuring span
• After 5 years	• < 0.3 % of measuring span
Rated conditions	
Ambient conditions	
Ambient temperature	-40 ... +85 °C (-40 ... +185 °F)
Storage temperature	-40 ... +85 °C (-40 ... +185 °F)
Relative humidity	< 98 %, with condensation
Electromagnetic compatibility	acc. to EN 61326 and NE21
Design	
Material	Molded plastic
Weight	50 g (0.11 lb)
Dimensions	See "Dimensional drawings"
Cross-section of cables	Max. 2.5 mm^2 (AWG 13)
Degree of protection according to IEC 60529	
• Enclosure	IP40
• Terminals	IP00

Certificates and approvals	
Explosion protection ATEX	
EC type-examination certificate	PTB 05 ATEX 2040X
• "Intrinsic safety" type of protection	II 1 G Ex ia IIC T6/T4 II 2 (1) G Ex ia/ib IIC T6/T4 II 3(1) G Ex ia/ic IIC T6/T4 II 1D Ex iaD 20 T115 °C
• "Non-sparking and energy-limited equipment" type of protection	II 3 G Ex nL IIC T6/T4 II 3 G Ex nA IIC T6/T4
Explosion protection: FM for USA	
• FM approval	FM 3024169
• Degrees of protection	IS / Cl I, II, III / Div 1 / GP ABCDEFG T6, T5, T4 Cl I / ZN 0 / AEx ia IIC T6, T5, T4 NI / Cl I / Div 2 / GP ABCDFG T6, T5, T4 NI / Cl I / ZN 2 / IIC T6, T5, T4
Explosion protection to FM for Canada ($_cFM_{US}$)	
• FM approval	FM 3024169C
• Degrees of protection	IS / Cl I, II, III / Div 1/ GP ABCDEFG T6, T5, T4 NI / Cl I / DIV 2 / GP ABCD T6, T5, T4 NIFW / Cl I, II, III / DIV 2 / GP ABCDFG T6, T5, T4 DIP / Cl II, III / Div 2 / GP FG T6, T5, T4 Cl I / ZN 0 / Ex ia IIC T6, T5, T4 Cl I / ZN 2 / Ex nA nL IIC T6, T5, T4
Other certificates	EAC Ex(GOST), NEPSI, IEC, EXPO-LABS
Software requirements for SIPROM T	
PC operating system	Windows ME, 2000, XP, Win 7 and Win 8; in connection with RS 232 modem, also Windows 95, 98 and 98SE

Factory setting:

- Pt100 (IEC 751) in the 3-wire connection
- Measuring range: 0 ... 100 °C (32 ... 212 °F)
- Fault current: 22.8 mA
- Sensor offset: 0 °C (0 °F)
- Damping 0.0 s

© Siemens 2020

Digital measuring error

Resistance thermometer

Input	Measuring range	Minimum measuring span		Digital accuracy	
	°C (°F)	°C	(°F)	°C	(°F)
According to IEC 60751					
Pt25	-200 ... +850 (-328 ... +1562)	10	(18)	0.3	(0.54)
Pt50	-200 ... +850 (-328 ... +1562)	10	(18)	0.15	(0.27)
Pt100 ... Pt200	-200 ... +850 (-328 ... +1562)	10	(18)	0.1	(0.18)
Pt500	-200 ... +850 (-328 ... +1562)	10	(18)	0.15	(0.27)
Pt1000	-200 ... +350 (-328 ... +662)	10	(18)	0.15	(0.27)
According to JIS C1604-81					
Pt25	-200 ... +649 (-328 ... +1200)	10	(18)	0.3	(0.54)
Pt50	-200 ... +649 (-328 ... +1200)	10	(18)	0.15	(0.27)
Pt100 ... Pt200	-200 ... +649 (-328 ... +1200)	10	(18)	0.1	(0.18)
Pt500	-200 ... +649 (-328 ... +1200)	10	(18)	0.15	(0.27)
Pt1000	-200 ... +350 (-328 ... +662)	10	(18)	0.15	(0.27)
Ni 25 ... Ni1000	-60 ... +250 (-76 ... +482)	10	(18)	0.1	(0.18)

Resistance-based sensor

Input	Measuring range	Minimum measuring span	Digital accuracy
	Ω	Ω	Ω
Resistance	0 ... 390	5	0.05
Resistance	0 ... 2200	25	0.25

Thermocouples

Input	Measuring range	Minimum measuring span		Digital accuracy	
	°C (°F)	°C	(°F)	°C	(°F)
Type B	100 ... 1820 (212 ... 3308)	100	(180)	2[1)]	(3.60)[1)]
Type C (W5)	0 ... 2300 (32 ... 4172)	100	(180)	2	(3.60)
Type D (W3)	0 ... 2300 (32 ... 4172)	100	(180)	1[2)]	(1.80)[2)]
Type E	-200 ... +1000 (-328 ... +1832)	50	(90)	1	(1.80)
Type J	-200 ... +1200 (-328 ... +2192)	50	(90)	1	(1.80)
Type K	-200 ... +1370 (-328 ... +2498)	50	(90)	1	(1.80)
Type L	-200 ... +900 (-328 ... +1652)	50	(90)	1	(1.80)
Type N	-200 ... +1300 (-328 ... +2372)	50	(90)	1	(1.80)
Type R	-50 ... +1760 (-58 ... +3200)	100	(180)	2	(3.60)
Type S	-50 ... +1760 (-58 ... +3200)	100	(180)	2	(3.60)
Type T	-200 ... +400 (-328 ... +752)	40	(72)	1	(1.80)
Type U	-200 ... +600 (-328 ... +1112)	50	(90)	2	(3.60)

1) The digital accuracy in the range 100 to 300 °C (212 to 572 °F) is 3 °C (5.4 °F).

2) The digital accuracy in the range 1750 to 2300 °C (3182 to 4172 °F) is 2 °C (3.6 °F).

mV sensor

Input	Measuring range	Minimum measuring span	Digital accuracy
	mV	mV	µV
mV sensor	-10 ... +70	2	40
mV sensor	-100 ... +1100	20	400

The digital accuracy is the accuracy after the analog/digital conversion including linearization and calculation of the measured value.

An additional error is generated in the output current 4 to 20 mA as a result of the digital/analog conversion of 0.025 % of the set span (digital-analog error).

The total error under reference conditions at the analog output is the sum from the digital error and the digital-analog error (poss. with the addition of reference junction errors in the case of thermocouple measurements).

© Siemens 2020

Selection and ordering data

	Article No.
Head transmitter SITRANS TH200 For installation in connection head type B, 2-wire system 4 ... 20 mA, programmable, with galvanic isolation	
Without explosion protection	**7NG3211-1NN00**
With explosion protection	
• According to ATEX	**7NG3211-1AN00**
• According to FM ($_C$FM$_{US}$)	**7NG3211-1BN00**

Options	**Order code**
Append suffix "**-Z**" to article no., add order code and plain text, if applicable.	
Test report (5 measuring points)	**C11**
Functional safety SIL2	**C20**
Functional safety SIL2/3	**C23**
Customer-specific programming	
Measuring range to be set Specify in plain text (max. 5 digits): Y01:... to ... °C, °F	**Y01**[1]
Measuring point number (TAG) max. 8 characters	**Y17**[2]
Measuring point description, max. 16 characters	**Y23**[2]
Measuring point message, max. 32 characters	**Y24**[2]
Pt100 (IEC) 2-wire, R_L = 0 Ω	**U02**[3]
Pt100 (IEC) 3-wire	**U03**[3]
Pt100 (IEC) 4-wire	**U04**[3]
Type B thermocouple	**U20**[3)4)]
Type C thermocouple (W5)	**U21**[3)4)]
Type D thermocouple (W3)	**U22**[3)4)]
Type E thermocouple	**U23**[3)4)]
Type J thermocouple	**U24**[3)4)]
Type K thermocouple	**U25**[3)4)]
Type L thermocouple	**U26**[3)4)]
Type N thermocouple	**U27**[3)4)]
Type R thermocouple	**U28**[3)4)]
Type S thermocouple	**U29**[3)4)]
Type T thermocouple	**U30**[3)4)]
Type U thermocouple	**U31**[3)4)]
For TC: Cold junction compensation: external (Pt100, 3-wire)	**U41**
For TC: Cold junction compensation: external with fixed value: specify in plain text	**Y50**
Enter special deviating customer-specific setting in plain text	**Y09**[5]
Fault current 3.6 mA (instead of 22.8 mA)	**U36**[2]
Cable extension Transmitter with installed cable extension 200 mm (7.87 inch), for Pt100 in 4-wire connection	**W01**

1) For customer-specific programming for RTD and TC, the start value and the end value of the required measuring span must be specified here.
2) For this selection, Y01 or Y09 must also be selected.
3) For this selection, Y01 must also be selected.
4) nternal reference junction compensation is selected as the default for TC.
5) For customer-specific programming for mV and ohm, the start value and the end value of the required measuring span and the unit must be entered here.

Accessories

	Article No.
Additional accessories for assembly, connection and transmitter configuration, see page 2/251.	
Modem Modem with USB interface and SIPROM T software	**7NG3092-8KN**
Mounting rail adapter for head transmitter (Quantity delivered: 5 units)	**7NG3092-8KA**
Connecting cable 4-wire, 200 mm (7.87 inch), for sensor connections when using head transmitters in the high hinged cover (set with 5 units)	**7NG3092-8KC**

For supply units, see Catalog FI01 section "Supplementary components"

Ordering example 1:

7NG3211-1NN00-Z Y01+Y17+U03

Y01: -10 ... +100 °C

Y17: TICA123

Ordering example 2:

7NG3211-1NN00-Z Y01+Y23+ U25

Y01: -10 ... +100 °C

Y23: TICA1234HEAT

Factory setting:

- Pt100 (IEC 751); 3-wire connection
- Measuring range: 0 … 100 °C (32 … 212 °F)
- Fault current: 22.8 mA
- Sensor offset: 0 °C (0 °F)
- Damping 0.0 s

© Siemens 2020

Dimensional drawings

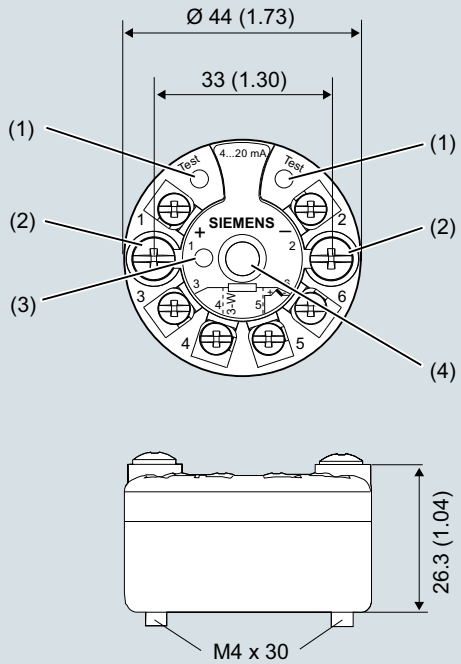

1(+) and 2(-)	Auxiliary power supply U_{aux}, output current I_{Out}
3, 4, 5 and 6	Pt100 sensor (for connections, see sensor connection assignment)
Test (+), Test (-)	Measurement of the output current with a multimeter
(1)	Test terminal
(2)	Mounting screw M4x30
(3)	LED for operation indication
(4)	Internal diameter of center hole 6.3 (0.25)

SITRANS TH200, dimensions and pin assignment, dimensions in mm (inch)

Mounting on DIN rail

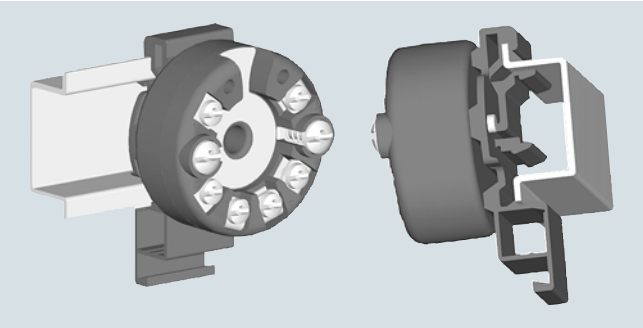

SITRANS TH200, mounting of transmitter on DIN rail

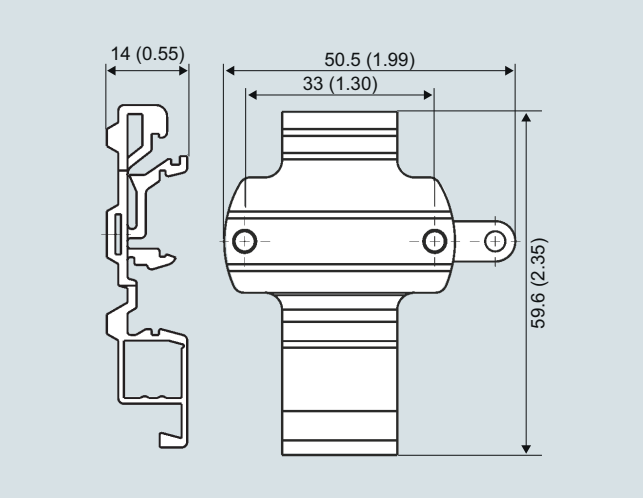

DIN rail adapter, dimensions in mm (inch)

© Siemens 2020

Circuit diagrams

Resistance thermometer

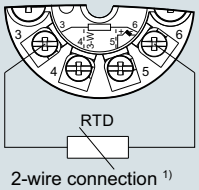

2-wire connection [1)]

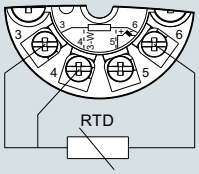

3-wire connection

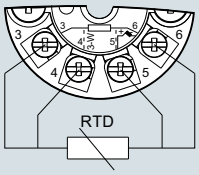

4-wire connection

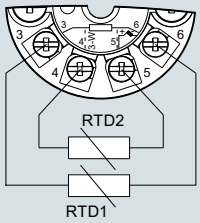

Generation of average value / difference [1)]

Resistance

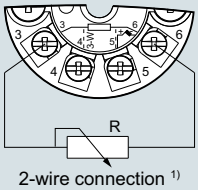

2-wire connection [1)]

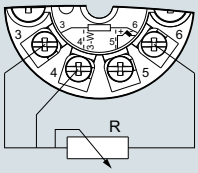

3-wire connection

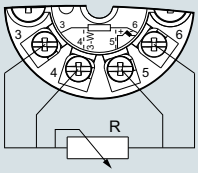

4-wire connection

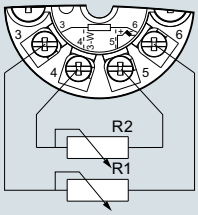

Generation of average value / difference [1)]

Thermocouple

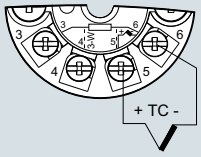

Cold junction compensation
Internal/fixed value

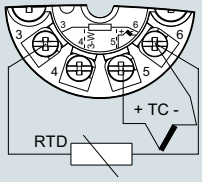

Cold junction compensation with external Pt100 in 2-wire connection [1)]

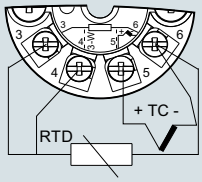

Cold junction compensation with external Pt100 in 3-wire connection

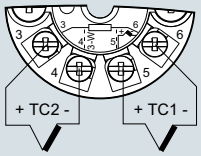

Generation of average value / difference with internal cold junction compensation

[1)] Programmable line resistance for the purpose of correction.

Voltage measurement

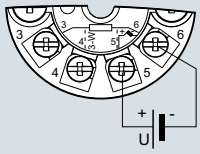

Current measurement

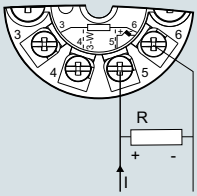

Connection of auxiliary power supply (U_{aux})

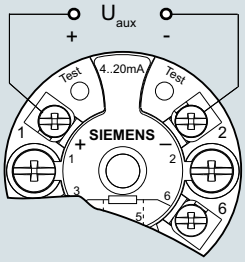

SITRANS TH200, sensor connection assignment

© Siemens 2020

Overview

Robust and durable HART - the universal SITRANS TH300 transmitter

- 2-wire device for 4 to 20 mA, HART
- Mounting in the connection head of the temperature sensor
- Universal input for virtually any type of temperature sensor
- Configurable over HART

Benefits

- Compact design
- Flexible mounting and center hole allow you to select your preferred type of installation
- Galvanic isolation
- Test sockets for multimeters
- Diagnostics LED (green/red)
- Sensor monitoring
  open circuits and short-circuits
- Self-monitoring
- Configuration status stored in EEPROM
- SIL2 (with order note C20), SIL2/3 (with C23)
- Expanded diagnostic functions, such as slave pointer, operating hours counter, etc.
- Special characteristic
- Electromagnetic compatibility to EN 61326 and NE21

Application

SITRANS TH300 transmitters can be used in all industrial sectors. Its compact size means that it can be installed in connection heads of type B or larger. The following sensors/signal sources can be connected over their universal input module:

- Resistance thermometer (2, 3, 4-wire connection)
- Thermocouples
- Resistance-based sensors and DC voltage sources

The output signal is a load-independent direct current of 4 to 20 mA corresponding to the sensor characteristic overlaid by the digital HART signal.

Transmitters of the "intrinsically safe" type of protection can be installed within potentially explosive atmospheres. The devices meet the directive 2014/34/EU (ATEX) as well as the FM and CSA requirements.

Function

The SITRANS TH300 is configured over HART. This can be done using a handheld communicator or even more conveniently with a HART modem and the SIMATIC PDM parameterization software. The configuration data are then permanently stored in the non-volatile memory (EEPROM).

Once the sensors and power supply have been correctly connected, the transmitter outputs a temperature-linear output signal and the diagnostics LED displays a green light. In the case of a sensor break, the LED flashes red, an internal device fault is indicated by a steady red light.

The test socket can be used to connect an ammeter at any time for monitoring purposes and plausibility checks. The output current can be read without any interruption, or even without opening the current loop.

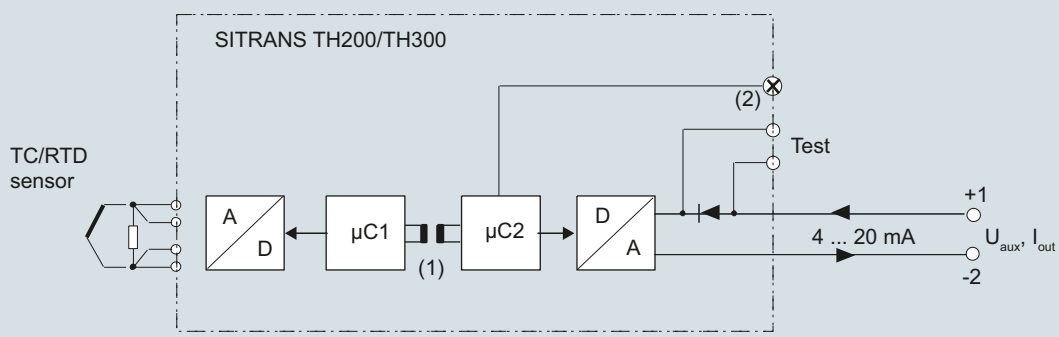

Input		Output		(1)	Electrically isolated
A/D	Analog-digital converter	µC2	Microcontroller, primary circuit	(2)	LED
Sensors	Resistance thermometer, thermocouple, resistance-based sensor, mV sensor	D/A	Digital-analog converter		
		U_{aux}	Auxiliary power supply		
µC1	Microcontroller, secondary circuit	I_{out}	Output current		

SITRANS TH 300 function diagram

© Siemens 2020

Technical specifications

Input	
Resistance thermometer	
Measured variable	Temperature
Sensor type	
• According to IEC 60751	Pt25 … Pt1000
• Acc. to JIS C 1604; a = 0.00392 K^{-1}	Pt25 … Pt1000
• According to IEC 60751	Ni25 … Ni1000
• Special type	Via special characteristic (max. 30 points)
Sensor factor	0.25 ... 10 (adaptation of the basic type, e.g. Pt100 to version Pt25 ... 1000)
Units	°C or °F
Connection	
• Standard connection	1 resistance thermometer (RTD) in 2-wire, 3-wire or 4-wire connection
• Averaging	2 identical resistance thermometers in 2-wire connection for generation of average temperature
• Differentiation	2 identical resistance thermometers (RTD) in 2-wire connection (RTD 1 – RTD 2 or RTD 2 – RTD 1)
Connection	
• 2-wire connection	Line resistance can be configured ≤100 Ω (loop resistance)
• 3-wire connection	No trim necessary
• 4-wire connection	No trim necessary
Sensor current	≤ 0.45 mA
Response time	≤ 250 ms for 1 sensor with break monitoring
Break monitoring	Always active (cannot be switched off)
Short-circuit monitoring	Can be switched on/off (default value: ON)
Measuring range	Assignable (see "Digital measuring error" table)
Min. measuring span	10 °C (18 °F)
Characteristic curve	Temperature-linear or special characteristic
Resistance-based sensor	
Measured variable	Actual resistance
Sensor type	Resistance-based, potentiometers
Units	Ω
Connection	
• Standard connection	1 resistance-based sensor (R) in 2-wire, 3-wire or 4-wire connection
• Averaging	2 resistance-based sensors in 2-wire connection for averaging
• Differentiation	2 resistance thermometers in 2-wire connection (R1 – R2 or R2 – R1)
Connection	
• 2-wire connection	Line resistance can be configured ≤100 Ω (loop resistance)
• 3-wire connection	No trim necessary
• 4-wire connection	No trim necessary
Sensor current	≤ 0.45 mA
Response time	≤ 250 ms for 1 sensor with break monitoring
Break monitoring	Always active (cannot be switched off)
Short-circuit monitoring	Can be switched on/off (default value: OFF)
Measuring range	Assignable max. 0 ... 2200 Ω (see "Digital measuring error" table)
Min. measuring span	5 ... 25 Ω (see "Digital measuring error" table)
Characteristic curve	Resistance-linear or special characteristic

Thermocouples	
Measured variable	Temperature
Sensor type (thermocouples)	
• Type B	Pt30Rh-Pt6Rh acc. to IEC 584
• Type C	W5%-Re acc. to ASTM 988
• Type D	W3%-Re acc. to ASTM 988
• Type E	NiCr-CuNi acc. to IEC 584
• Type J	Fe-CuNi acc. to IEC 584
• Type K	NiCr-Ni acc. to IEC 584
• Type L	Fe-CuNi acc. to DIN 43710
• Type N	NiCrSi-NiSi acc. to IEC 584
• Type R	Pt13Rh-Pt acc. to IEC 584
• Type S	Pt10Rh-Pt acc. to IEC 584
• Type T	Cu-CuNi acc. to IEC 584
• Type U	Cu-CuNi acc. to DIN 43710
Units	°C or °F
Connection	
• Standard connection	1 thermocouple (TC)
• Averaging	2 thermocouples (TC)
• Differentiation	2 thermocouples (TC) (TC1 – TC2 or TC2 – TC1)
Response time	≤ 250 ms for 1 sensor with break monitoring
Break monitoring	Can be switched off
Reference junction compensation	
• Internal	With integrated Pt100 resistance thermometer
• External	With external Pt100 IEC 60751 (2-wire or 3-wire connection)
• External fixed	Reference junction temperature can be set as fixed value
Measuring range	Assignable (see "Digital measuring error" table)
Min. measuring span	Min. 40 ... 100 °C (72 ... 180 °F) (see "Digital measuring error" table)
Characteristic curve	Temperature-linear or special characteristic
mV sensor	
Measured variable	DC voltage
Sensor type	DC voltage source (DC voltage source possible over an externally connected resistor)
Units	mV
Response time	≤ 250 ms for 1 sensor with break monitoring
Break monitoring	Can be switched off
Measuring range	-10 ... +70 mV -100 … +1100 mV
Min. measuring span	2 mV or 20 mV
Overload capability of the input	-1.5 ... +3.5 V DC
Input resistance	≥ 1 MΩ
Characteristic curve	Voltage-linear or special characteristic

© Siemens 2020

Output	
Output signal	4 ... 20 mA, 2-wire with communication acc. to HART Rev. 5.9
Auxiliary power	11 ... 35 V DC (to 30 V with Ex ia and ib; to 32 V with Ex nA/nL/ic)
Max. load	(U_{aux} – 11 V)/0.023 A
Overrange	3.6 ... 23 mA, infinitely adjustable (default range: 3.80 mA ... 20.5 mA)
Error signal (e.g. following sensor fault) (conforming to NE43)	3.6 ... 23 mA, infinitely adjustable (default value: 22.8 mA)
Sample cycle	0.25 s nominal
Damping	Software filter 1st order 0 ... 30 s (parameterizable)
Protection	Against reverse polarity
Galvanic isolation	Input against output 2.12 kV DC (1.5 kV_{rms} AC)
Measuring accuracy	
Digital measuring error	See "Digital measuring error" table
Reference conditions	
• Auxiliary power	24 V ± 1 %
• Load	500 Ω
• Ambient temperature	23 °C
• Warming-up time	> 5 min
Error in the analog output (digital/analog converter)	< 0.025 % of measuring span
Error due to internal reference junction	< 0.5 °C (0.9 °F)
Effect of ambient temperature	
• Analog measuring error	0.02 % of meas. span/10 °C (18 °F)
• Digital measuring error	
- with resistance thermometers	0.06 °C (0.11 °F)/10°C (18 °F)
- with thermocouples	0.6 °C (1.1 °F)/10°C (18 °F)
Auxiliary power effect	< 0.001 % of meas. span/V
Effect of load impedance	< 0.002 % of meas. span/100 Ω
Long-term drift	
• In the first month	< 0.02 % of measuring span
• After one year	< 0.2 % of measuring span
• After 5 years	< 0.3 % of measuring span
Rated conditions	
Ambient conditions	
Ambient temperature	-40 ... +85 °C (-40 ... +185 °F)
Storage temperature	-40 ... +85 °C (-40 ... +185 °F)
Relative humidity	< 98 %, with condensation
Electromagnetic compatibility	According to EN 61326 and NE21
Design	
Material	Molded plastic
Weight	50 g (0.11 lb)
Dimensions	See "Dimensional drawings"
Cross-section of cables	Max. 2.5 mm^2 (AWG 13)
Degree of protection according to IEC 60529	
• Enclosure	IP40
• Terminals	IP00

Certificates and approvals	
Explosion protection ATEX	
EC type-examination certificate	PTB 05 ATEX 2040X
• "Intrinsic safety" type of protection	II 1 G Ex ia IIC T6/T4 II 2 (1) G Ex ia/ib IIC T6/T4 II 3(1) G Ex ia/ic IIC T6/T4 II 1D Ex iaD 20 T115 °C
• "Non-sparking and energy-limited equipment" type of protection	II 3 G Ex nL IIC T6/T4 II 3 G Ex nA IIC T6/T4
Explosion protection: FM for USA	
• FM approval	FM 3024169
• Degrees of protection	IS / Cl I, II, III / Div 1 / GP ABCDEFG T6, T5, T4 Cl I / ZN 0 / AEx ia IIC T6, T5, T4 NI / Cl I / Div 2 / GP ABCDFG T6, T5, T4 NI / Cl I / ZN 2 / IIC T6, T5, T4
Explosion protection to FM for Canada ($_cFM_{US}$)	
• FM approval	FM 3024169C
• Degrees of protection	IS / Cl I, II, III / Div 1/ GP ABCDEFG T6, T5, T4 NI / Cl I / DIV 2 / GP ABCD T6, T5, T4 NIFW / Cl I, II, III / DIV 2 / GP ABCDFG T6, T5, T4 DIP / Cl II, III / Div 2 / GP FG T6, T5, T4 Cl I / ZN 0 / Ex ia IIC T6, T5, T4 Cl I / ZN 2 / Ex nA nL IIC T6, T5, T4
Other certificates	EAC Ex(GOST), NEPSI, IEC, EXPOLABS

Factory setting:

- Pt100 (IEC 751) in the 3-wire connection
- Measuring range: 0 ... 100 °C (32 ... 212 °F)
- Fault current: 22.8 mA
- Sensor offset: 0 °C (0 °F)
- Damping 0.0 s

© Siemens 2020

2

Digital measuring error

Resistance thermometer

Input	Measuring range	Minimum measuring span		Digital accuracy	
	°C (°F)	°C	(°F)	°C	(°F)
According to IEC 60751					
Pt25	-200 ... +850 (-328 ... +1562)	10	(18)	0.3	(0.54)
Pt50	-200 ... +850 (-328 ... +1562)	10	(18)	0.15	(0.27)
Pt100 ... Pt200	-200 ... +850 (-328 ... +1562)	10	(18)	0.1	(0.18)
Pt500	-200 ... +850 (-328 ... +1562)	10	(18)	0.15	(0.27)
Pt1000	-200 ... +350 (-328 ... +662)	10	(18)	0.15	(0.27)
According to JIS C1604-81					
Pt25	-200 ... +649 (-328 ... +1200)	10	(18)	0.3	(0.54)
Pt50	-200 ... +649 (-328 ... +1200)	10	(18)	0.15	(0.27)
Pt100 ... Pt200	-200 ... +649 (-328 ... +1200)	10	(18)	0.1	(0.18)
Pt500	-200 ... +649 (-328 ... +1200)	10	(18)	0.15	(0.27)
Pt1000	-200 ... +350 (-328 ... +662)	10	(18)	0.15	(0.27)
Ni 25 ... Ni1000	-60 ... +250 (-76 ... +482)	10	(18)	0.1	(0.18)

Resistance-based sensor

Input	Measuring range	Minimum measuring span	Digital accuracy
	Ω	Ω	Ω
Resistance	0 ... 390	5	0.05
Resistance	0 ... 2200	25	0.25

Thermocouples

Input	Measuring range	Minimum measuring span		Digital accuracy	
	°C (°F)	°C	(°F)	°C	(°F)
Type B	100 ... 1820 (212 ... 3308)	100	(180)	2[1]	(3.60)[1]
Type C (W5)	0 ... 2300 (32 ... 4172)	100	(180)	2	(3.60)
Type D (W3)	0 ... 2300 (32 ... 4172)	100	(180)	1[2]	(1.80)[2]
Type E	-200 ... +1000 (-328 ... +1832)	50	(90)	1	(1.80)
Type J	-200 ... +1200 (-328 ... +2192)	50	(90)	1	(1.80)
Type K	-200 ... +1370 (-328 ... +2498)	50	(90)	1	(1.80)
Type L	-200 ... +900 (-328 ... +1652)	50	(90)	1	(1.80)
Type N	-200 ... +1300 (-328 ... +2372)	50	(90)	1	(1.80)
Type R	-50 ... +1760 (-58 ... +3200)	100	(180)	2	(3.60)
Type S	-50 ... +1760 (-58 ... +3200)	100	(180)	2	(3.60)
Type T	-200 ... +400 (-328 ... +752)	40	(72)	1	(1.80)
Type U	-200 ... +600 (-328 ... +1112)	50	(90)	2	(3.60)

[1] The digital accuracy in the range 100 to 300 °C (212 to 572 °F) is 3 °C (5.4 °F).

[2] The digital accuracy in the range 1750 to 2300 °C (3182 to 4172 °F) is 2 °C (3.6 °F).

mV sensor

Input	Measuring range	Minimum measuring span	Digital accuracy
	mV	mV	µV
mV sensor	-10 ... +70	2	40
mV sensor	-100 ... +1100	20	400

The digital accuracy is the accuracy after the analog/digital conversion including linearization and calculation of the measured value.

An additional error is generated in the output current 4 to 20 mA as a result of the digital/analog conversion of 0.025 % of the set span (digital-analog error).

The total error under reference conditions at the analog output is the sum from the digital error and the digital-analog error (poss. with the addition of reference junction errors in the case of thermocouple measurements).

© Siemens 2020

Selection and ordering data

	Article No.
SITRANS TH300 head transmitter For installation in connection head type B, 2-wire system 4 ... 20 mA, communication-capable according to HART, with galvanic isolation	
Without explosion protection	**7NG3212-0NN00**
With explosion protection	
• According to ATEX	**7NG3212-0AN00**
• According to FM ($_C$FM$_{US}$)	**7NG3212-0BN00**

Options	Order code
Append suffix "**-Z**" to article no., add order code and plain text, if applicable.	
Test report (5 measuring points)	**C11**
Functional safety SIL2	**C20**
Functional safety SIL2/3	**C23**
Customer-specific programming	
Measuring range to be set Specify in plain text (max. 5 digits): Y01: ... to ... °C, °F	**Y01**[1)]
Measuring point number (TAG) max. 8 characters	**Y17**[2)]
Measuring point description, max. 16 characters	**Y23**[2)]
Measuring point message, max. 32 characters	**Y24**[2)]
Pt100 (IEC) 2-wire, R_L = 0 Ω	**U02**[3)]
Pt100 (IEC) 3-wire	**U03**[3)]
Pt100 (IEC) 4-wire	**U04**[3)]
Type B thermocouple	**U20**[3)4)]
Type C thermocouple (W5)	**U21**[3)4)]
Type D thermocouple (W3)	**U22**[3)4)]
Type E thermocouple	**U23**[3)4)]
Type J thermocouple	**U24**[3)4)]
Type K thermocouple	**U25**[3)4)]
Type L thermocouple	**U26**[3)4)]
Type N thermocouple	**U27**[3)4)]
Type R thermocouple	**U28**[3)4)]
Type S thermocouple	**U29**[3)4)]
Type T thermocouple	**U30**[3)4)]
Type U thermocouple	**U31**[3)4)]
For TC: Cold junction compensation: external (Pt100, 3-wire)	**U41**
For TC: Cold junction compensation: external with fixed value: specify in plain text	**Y50**
Enter special deviating customer-specific setting in plain text	**Y09**[5)]
Fault current 3.6 mA (instead of 22.8 mA)	**U36**[2)]
Cable extension Transmitter with installed cable extension 200 mm (7.87 inch), for Pt100 in 4-wire connection	**W01**

1) For customer-specific programming for RTD and TC, the start value and the end value of the required measuring span must be specified here.

2) For this selection, Y01 or Y09 must also be selected.

3) For this selection, Y01 must also be selected.

4) Internal reference junction compensation is selected as the default for TC.

5) For customer-specific programming for mV and ohm, the start value and the end value of the required measuring span and the unit must be entered here.

Accessories

	Article No.
Additional accessories for assembly, connection and transmitter configuration, see page 2/251.	
Modem	
Modem with USB interface	**7MF4997-1DB**
SIMATIC PDM operating software	See Catalog FI01 section 8
Mounting rail adapter for head transmitter (Quantity delivered: 5 units)	**7NG3092-8KA**
Connecting cable 4-wire, 200 mm (7.87 inch), for sensor connections when using head transmitters in the high hinged cover (set with 5 units)	**7NG3092-8KC**

For supply units, see Catalog FI01 section "Supplementary components"

Ordering example 1:

7NG3212-0NN00-Z Y01+Y17+U03

Y01: -10 ... +100 °C

Y17: TICA123

Ordering example 2:

7NG3212-0NN00-Z Y01+Y23+ U25

Y01: -10 ... +100 °C

Y23: TICA1234HEAT

Factory setting:

- Pt100 (IEC 751); 3-wire connection
- Measuring range: 0 ... 100 °C (32 ... 212 °F)
- Fault current: 22.8 mA
- Sensor offset: 0 °C (0 °F)
- Damping 0.0 s

© Siemens 2020

Dimensional drawings

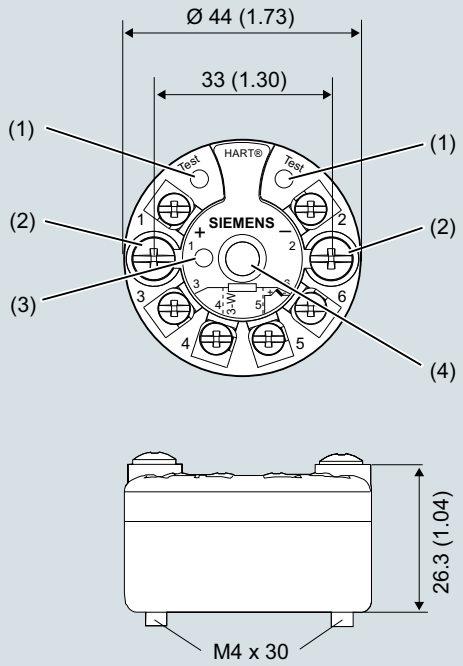

1(+) and 2(-)	Auxiliary power supply U_{aux}, output current I_{Out}
3, 4, 5 and 6	Pt100 sensor (for connections, see sensor connection assignment)
Test (+), Test (-)	Measurement of the output current with a multimeter
(1)	Test terminal
(2)	Mounting screw M4x30
(3)	LED for operation indication
(4)	Internal diameter of center hole 6.3 (0.25)

SITRANS TH300, dimensions and pin assignment, dimensions in mm (inch)

Mounting on DIN rail

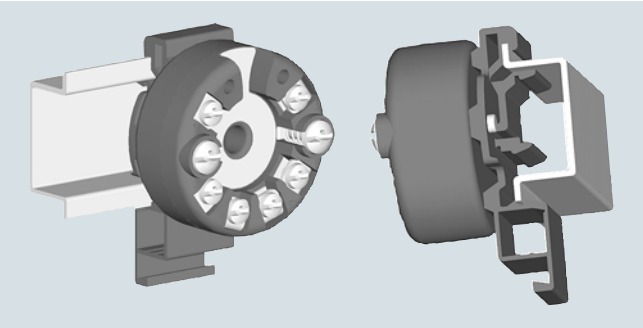

SITRANS TH300, mounting of transmitter on DIN rail

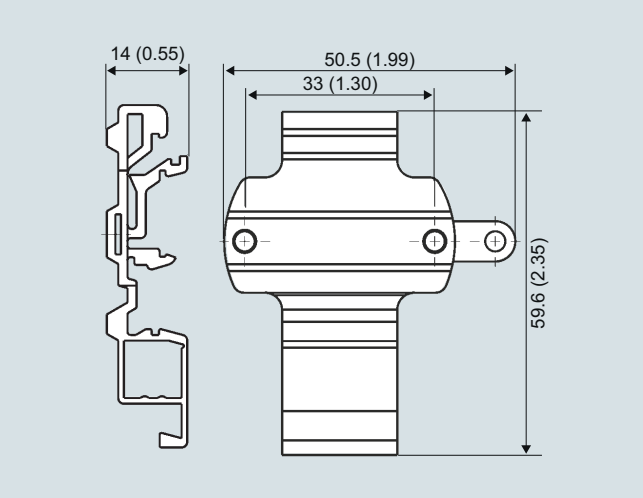

DIN rail adapter, dimensions in mm (inch)

© Siemens 2020

Circuit diagrams

Resistance thermometer

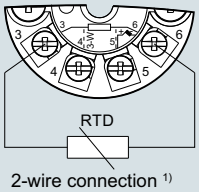

2-wire connection [1)]

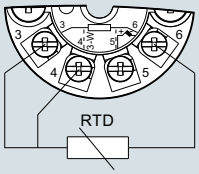

3-wire connection

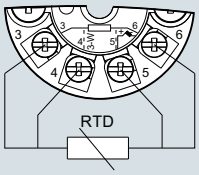

4-wire connection

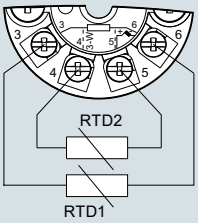

Generation of average value / difference [1)]

Resistance

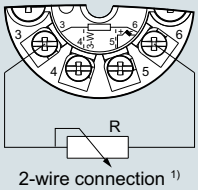

2-wire connection [1)]

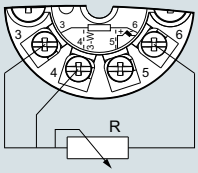

3-wire connection

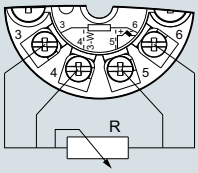

4-wire connection

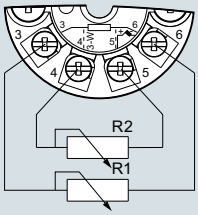

Generation of average value / difference [1)]

Thermocouple

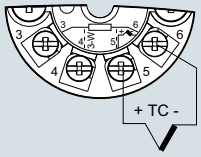

Cold junction compensation
Internal/fixed value

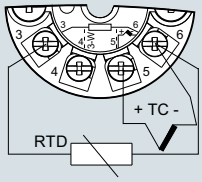

Cold junction compensation with external Pt100 in 2-wire connection [1)]

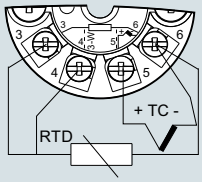

Cold junction compensation with external Pt100 in 3-wire connection

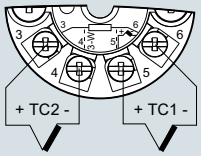

Generation of average value / difference with internal cold junction compensation

[1)] Programmable line resistance for the purpose of correction.

Voltage measurement

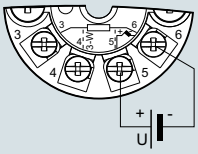

Current measurement

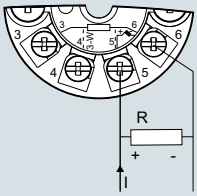

Connection of auxiliary power supply (U_{aux})

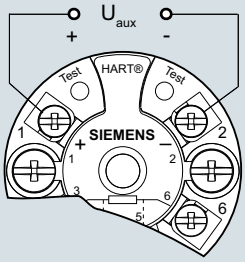

SITRANS TH300, sensor connection assignment

© Siemens 2020

SITRANS TH400, fieldbus transmitter

Overview

SITRANS TH400 fieldbus transmitters

Versions:

- For FOUNDATION fieldbus
- For PROFIBUS PA

The SITRANS TH400 Head transmitter is a small field bus transmitter for mounting in the connection head of form B. Extensive functionality enables the Head transmitter to be precisely adapted to the plant's requirements. Operation is very simple in spite of the numerous setting options. Thanks to its universal concept it can be used in all industries and is easy to integrate in the context of Totally Integrated Automation applications.

Transmitters of the "intrinsically safe" type of protection can be installed within potentially explosive atmospheres. The devices meet the directive 2014/34/EU (ATEX) as well as the FM and CSA requirements.

Installing SITRANS TH400 in temperature sensors turns them into complete, bus-capable measuring points; compact - and in a single device.

Application

- Linearized temperature measurement with resistance thermometers or thermal elements
- Differential, mean-value or redundant temperature measurement with resistance thermometers or thermal elements
- Linear resistance and bipolar millivolt measurements
- Differential, mean-value or redundant resistance and bipolar millivolt measurements

Function

Features

- Mounting in connection head, type B or larger
- Polarity-neutral bus connection
- 24-bit analog-digital converter for high resolution
- Galvanic isolation
- Intrinsically-safe version for use in potentially explosive areas
- Special characteristic
- Sensor redundance

With PROFIBUS PA communication

- Function blocks: 2 x analog

With FOUNDATION Fieldbus communication

- Function blocks: 2 x analog and 1 x PID
- Functionality: Basic or LAS

Mode of operation

The following function diagram explains the mode of operation of the transmitter.

The only difference between the two versions of the SITRANS TH400 (7NG3214-... and 7NG3215-...) is the type of fieldbus protocol used (PROFIBUS PA or FOUNDATION Fieldbus).

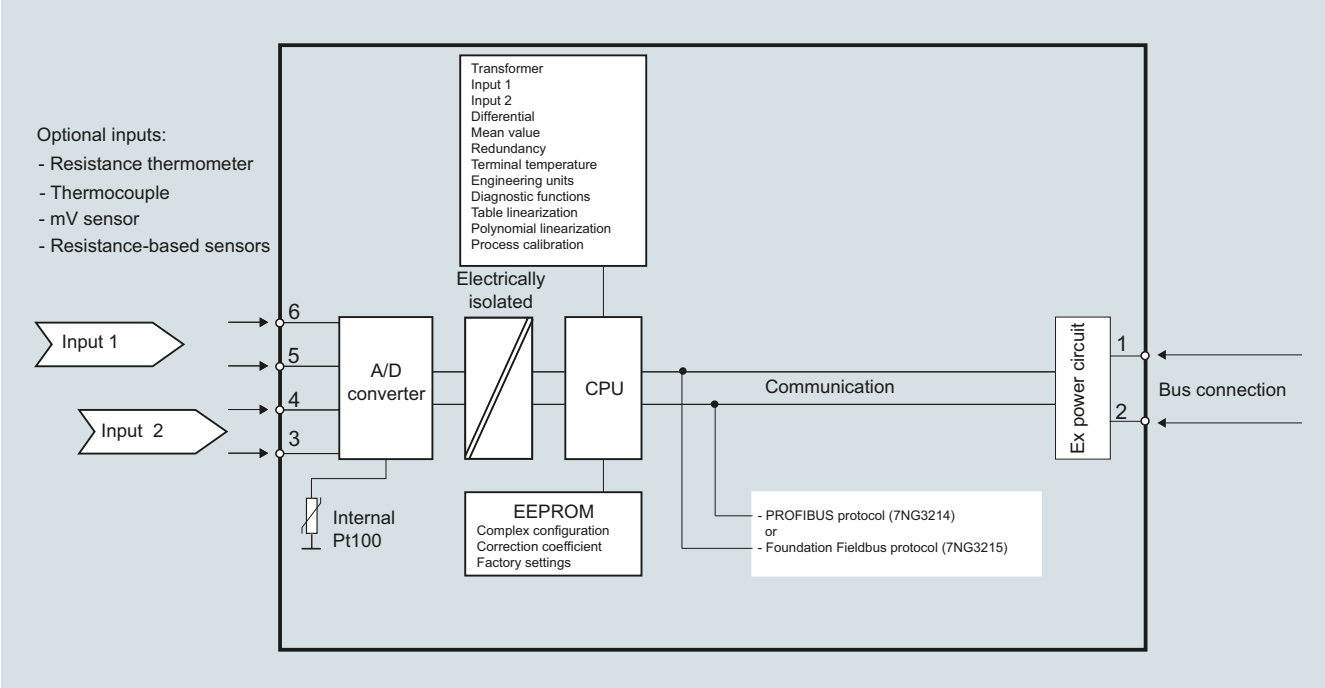

SITRANS TH400, function diagram

© Siemens 2020

System communication

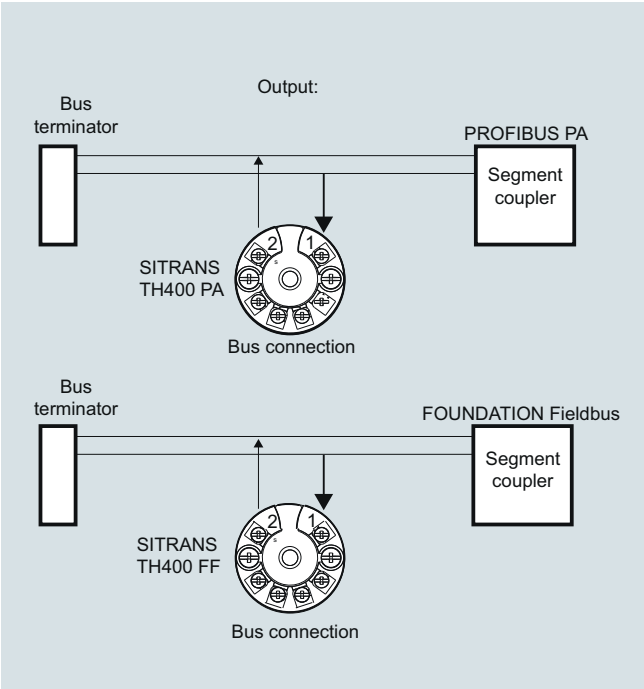

SITRANS TH400, communications interface

Technical specifications

Input	
Analog-to-digital conversion	
• Measurement rate	< 50 ms
• Resolution	24-bit
Resistance thermometer	
Pt25 ... Pt1000 acc. to IEC 60751/JIS C 1604	
• Measuring range	-200 ... +850 °C (-328 ... +1562 °F)
Ni25 ... Ni1000 acc. to DIN 43760	
• Measuring range	-60 ... +250 °C (-76 ... +482 °F)
Cu10 ... Cu1000, α = 0.00427	
• Measuring range	-50 ... +200 °C (-58 ... +392 °F)
Line resistance per sensor cable	Max. 50 Ω
Sensor current	Nominal 0.2 mA
Sensor fault detection	
• Sensor break detection	Yes
• Sensor short-circuit detection	Yes, < 15 Ω
Resistance-based sensor	
Measuring range	0 Ω ... 10 kΩ
Line resistance per sensor cable	Max. 50 Ω
Sensor current	Nominal 0.2 mA
Sensor fault detection	
• Sensor break detection	Yes
• Sensor short-circuit detection	Yes, < 15 Ω
Thermocouple	
According to IEC 584	Measuring range
• Type B	400 ... 1820 °C (752 ... 3308 °F)
• Type E	-100 ... +1000 °C (-148 ... +1832 °F)
• Type J	-100 ... +1000 °C (-148 ... +1832 °F)
• Type K	-100 ... +1200 °C (-148 ... +2192 °F)
• Type N	-180 ... +1300 °C (-292 ... +2372 °F)
• Type R	-50 ... +1760 °C (-58 ... +3200 °F)
• Type S	-50 ... +1760 °C (-58 ... +3200 °F)
• Type T	-200 ... +400 °C (-328 ... +752 °F)
According to DIN 43710	
• Type L	-200 ... +900 °C (-328 ... +1652 °F)
• Type U	-200 ... +600 °C (-328 ... +1112 °F)
According to ASTM E988-90	
• Type W3	0 ... 2300 °C (32 ... +4172 °F)
• Type W5	0 ... 2300 °C (32 ... +4172 °F)
External reference junction compensation	-40 ... +135 °C (-40 ... +275 °F)
Sensor fault detection	
• Sensor break detection	Yes
• Sensor short-circuit detection	Yes, < 3 mV
• Sensor current in the event of open-circuit monitoring	4 µA
mV sensor - voltage input	
Measuring range	-800 ... +800 mV
Input resistance	10 MΩ
Output	
Filter time (programmable)	0 ... 60 s
Update time	< 400 ms
Measuring accuracy	Accuracy is defined as the higher value of general values and basic values.

General values

Type of input	Absolute accuracy	Temperature coefficient
All	≤ ± 0.05 % of the measured value	≤ ± 0.002 % of the measured value/°C

Basic values

Type of input	Basic accuracy	Temperature coefficient
Pt100 and Pt1000	≤ ± 0.1 °C	≤ ± 0.002 °C/°C
Ni100	≤ ± 0.15 °C	≤ ± 0.002 °C/°C
Cu10	≤ ± 1.3 °C	≤ ± 0.02 °C/°C
Resistance-based sensor	≤ ± 0.05 Ω	≤ ± 0.002 Ω/°C
Voltage source	≤ ± 10 µV	≤ ± 0.2 % µV/°C
Thermocouple, type: E, J, K, L, N, T, U	≤ ± 0.5 °C	≤ ± 0.01 °C/°C
Thermocouple, type: B, R, S, W3, W5	≤ ± 1 °C	≤ ± 0.025 °C/°C
Reference junction compensation	≤ ± 0.5 °C	

Reference conditions	
Warming-up time	30 s
Signal-to-noise ratio	Min. 60 dB
Calibration condition	20 ... 28 °C (68 ... 82 °F)

© Siemens 2020

SITRANS TH400, fieldbus transmitter

Rated conditions	
Ambient conditions	
Ambient temperature	-40 ... +85 °C (-40 ... +185 °F)
Storage temperature	-40 ... +85 °C (-40 ... +185 °F)
Relative humidity	≤ 98 %, with condensation
Insulation strength • Test voltage	 500 V AC for 60 s
Mechanical testing • Vibrations (DIN class B) to	 IEC 60068-2-6 and IEC 60068-2-64 4 g/2 ... 100 Hz
Electromagnetic compatibility	
EMC noise voltage influence	< ± 0.1 % of span
Extended EMC noise immunity: NAMUR NE 21, criterion A, Burst	< ± 1 % of span
EMC 2014/30/EU Emission and Noise Immunity according to	EN 61326
Design	
Material	Molded plastic
Weight	55 g (0.12 lb)
Dimensions	See Dimensional drawings
Cross-section of cables	Max. 2.5 mm^2 (AWG 13)
Degree of protection • Transmitter enclosure • Terminal	 IP40 IP00
Auxiliary power	
Supply voltage • Standard, Ex "nA", Ex "nL", NI • ATEX, FM, UL and CSA • In FISCO/FNICO installations	 9.0 ... 32 V DC 9.0 ... 30 V DC 9.0 ... 17.5 V DC
Power consumption	< 11 mA
Max. increase in power consumption in the event of a fault	< 7 mA
Certificates and approvals	
Explosion protection ATEX	
EC type-examination certificate • "Intrinsic safety" type of protection	KEMA 06 ATEX 0264 II 1 G Ex ia IIC T4...T6 II 2(1) G Ex ib[ia] IIC T4...T6 II 1 D Ex iaD
EC type-examination certificate • Type of protection for "equipment is non-arcing"	KEMA 06 ATEX 0263 X II 3 GD Ex nA[nL] IIC T4...T6 II 3 GD Ex nL IIC T4...T6 II 3 GD Ex nA[ic] IIC T4...T6 II 3 GD Ex ic IIC T4...T6
Explosion protection: FM for USA • FM approval • Degrees of protection	 FM 3027985 • IS Class I, Div 1, Groups A, B, C, D T4/T5/T6, FISCO • IS Class I, Zone 0, AEx ia, IIC T4/T5/T6, FISCO • NI Class I, Div 2, Groups A, B, C, D T4/T5/T6, FNICO
Explosion protection CSA for Canada • CSA approval • Degrees of protection	 CSA 1861385 • IS Class I, Div 1, Groups A, B, C, D T4/T5/T6 • Ex ia IIC T4/T5/T6 and Ex ib [ia] IIC T4/T5/T6 • NI Class I, Div 2, Groups A, B, C, D T4/T5/T6 • Ex nA II T4/T5/T6
Other certificates	EAC Ex(GOST), NEPSI, IECEx

Communication	
Parameterization interface • PROFIBUS PA connection	
- Protocol - Address (for delivery)	Profile 3.0 126
• FOUNDATION Fieldbus connection	
- Protocol - Functionality - Version - Function blocks	FF protocol Basic or LAS ITK 4.6 2 x analog and 1 x PID
Factory setting	
only for SITRANS TH400 PA	
Sensor	Pt100 (IEC 751)
Type of connection	3-wire connection
Unit	°C
Failure mode	Last valid value
Filter time	0 s
PA address	126
PROFIBUS Ident No.	Manufacturer-specific
only for SITRANS TH400 FF	
Sensor	Pt100 (IEC 751)
Type of connection	3-wire connection
Unit	°C
Failure mode	Last valid value
Filter time	0 s
Node address	22

© Siemens 2020

Selection and ordering data

	Article No.
Head transmitter SITRANS TH400 For installation in connection head, with electrical isolation, operating instructions must be ordered separately.	
Bus-compatible to PROFIBUS PA	
• No explosion protection or Zone 2/Div 2 according to ATEX/FM/CSA/IECEX/NEPSI/IECEX/NEPSI	**7NG3214-0NN00**
• With explosion protection "Intrinsically safe according to ATEX/FM/CSA/IECEX/NEPSI"	**7NG3214-0AN00**
Bus-compatible to FOUNDATION Fieldbus	
• No explosion protection or Zone 2/Div 2 according to ATEX/FM/CSA/IECEX/NEPSI	**7NG3215-0NN00**
• With explosion protection "Intrinsically safe according to ATEX/FM/CSA/IECEX/NEPSI"	**7NG3215-0AN00**

Options	Order code
Append suffix "**-Z**" to article no., add order code and plain text, if applicable.	
Test report (5 measuring points)	**C11**[1]
Customer-specific programming	
Measuring range to be set Specify in plain text (max. 5 digits): Y01: ... to ... °C, °F	**Y01**[1]
Measuring point number (TAG) max. 8 characters	**Y17**[2]
Measuring point description, max. 16 characters	**Y23**[2]
Measuring point message, max. 32 characters	**Y24**[2]
Specify bus address in plain text	**Y25**[2]
Pt100 (IEC) 2-wire, R_L = 0 W	**U02**[3]
Pt100 (IEC) 3-wire	**U03**[3]
Pt100 (IEC) 4-wire	**U04**[3]
Type B thermocouple	**U20**[3][4]
Type C thermocouple (W5)	**U21**[3][4]
Type D thermocouple (W3)	**U22**[3][4]
Type E thermocouple	**U23**[3][4]
Type J thermocouple	**U24**[3][4]
Type K thermocouple	**U25**[3][4]
Type L thermocouple	**U26**[3][4]
Type N thermocouple	**U27**[3][4]
Type R thermocouple	**U28**[3][4]
Type S thermocouple	**U29**[3][4]
Type T thermocouple	**U30**[3][4]
Type U thermocouple	**U31**[3][4]
For TC: Cold junction compensation: external (Pt100, 3-wire)	**U41**
For TC: Cold junction compensation: external with fixed value: specify in plain text	**Y50**
Enter special deviating customer-specific setting in plain text	**Y09**[5]

1) For customer-specific programming for RTD and TC, the start value and the end value of the required measuring span must be specified here.

2) For this selection, Y01 or Y09 must also be selected.

3) For this selection, Y01 must also be selected.

4) nternal reference junction compensation is selected as the default for TC.

5) For customer-specific programming for mV and ohm, the start value and the end value of the required measuring span and the unit must be entered here.

Accessories

	Article No.
Additional accessories for assembly, connection and transmitter configuration, see page 2/251.	
SIMATIC PDM operating software	See Catalog FI01 section 8
DIN rail adapters for head transmitters (Quantity delivered: 5 units)	**7NG3092-8KA**
Connecting cable 4-wire, 200 mm (7.87 inch), for sensor connections when using head transmitters in the high hinged cover (set with 5 units)	**7NG3092-8KC**
for additional PA components,	See Catalog IK PI

Ordering example 1:

7NG3214-0NN00-Z Y01+Y17+U03

Y01: 0...100 °C

Y17: TICA1234HEAT

Ordering example 2:

7NG3214-0NN00-Z Y01+Y17+Y25+U25

Y01: 0...500 °C

Y17: TICA8HEAT

Y25: 33

Factory setting:

- For SITRANS TH400 PA:
  - Pt100 (IEC 751); 3-wire connection
  - Unit: °C
  - Failure mode: Last valid value
  - Filter time: 0 s
  - PA address: 126
  - PROFIBUS Ident No.: Manufacturer-specific
- For SITRANS TH400 FF:
  - Pt100 (IEC 751); 3-wire connection
  - Unit: °C
  - Failure mode: Last valid value
  - Filter time: 0 s
  - Node address: 22

© Siemens 2020

Dimensional drawings

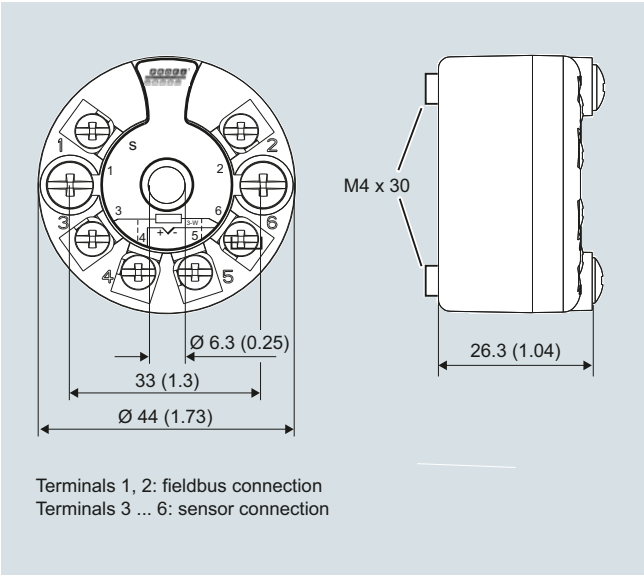

SITRANS TH400 dimensions in mm (inches) and connection diagram

Mounting on DIN rail

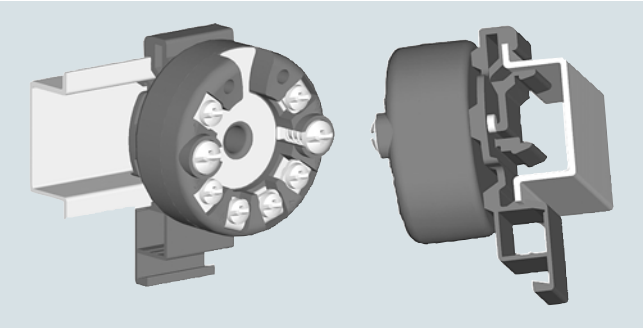

SITRANS TH400, mounting of transmitter on DIN rail

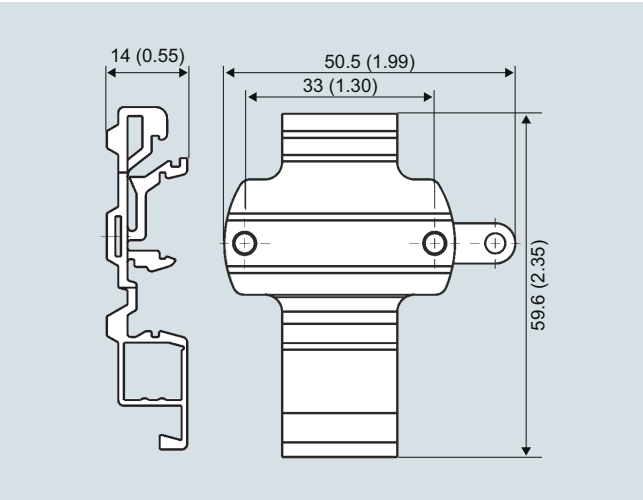

DIN rail adapter, dimensions in mm (inch)

© Siemens 2020

Circuit diagrams

Resistance thermometer

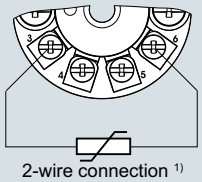

2-wire connection [1)]

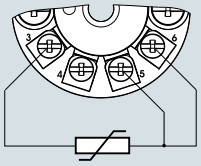

3-wire connection

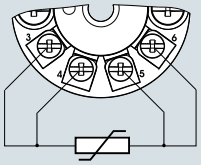

4-wire connection

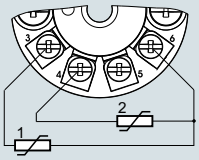

Mean-value/differential or redundancy generation
2 x 2-wire connection [1)]

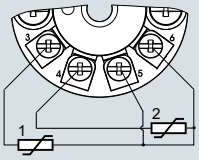

Mean-value/differential or redundancy generation
1 sensor in 2-wire connection [1)]
1 sensor in 3-wire connection

Thermocouple

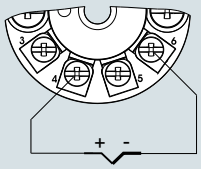

Internal
cold junction compensation

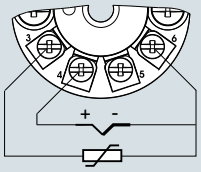

Cold junction compensation
with external Pt100 in 2-wire connection [1)]

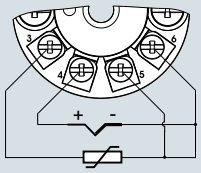

Cold junction compensation
with external Pt100 in 3-wire connection

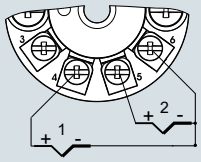

Mean value, differential or redundancy generation with internal cold junction compensation

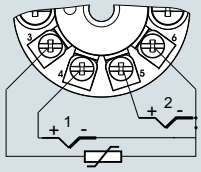

Mean value, differential or redundancy generation and cold junction compensation with internal Pt100 in 2-wire connection [1)]

Resistance

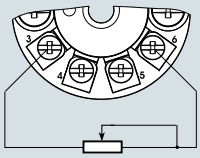

2-wire connection [1)]

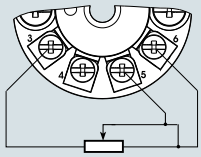

3-wire connection

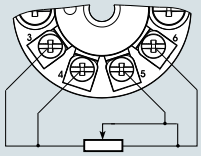

4-wire connection

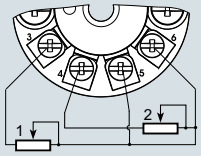

Mean value, differential or redundancy generation
1 resistor in 2-wire connection [1)]
1 resistor in 3-wire connection

Voltage measurement

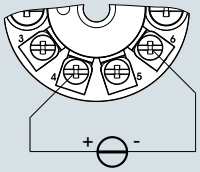

One voltage source

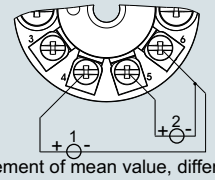

Measurement of mean value, differential and redundancy with 2 voltage sources

[1)] Programmable line resistance for the purpose of correction.

SITRANS TH400, sensor connection assignment

© Siemens 2020

SITRANS TH320 (HART, universal)

Overview

- 2-wire head transmitter with and without HART communications interface
- Mounting in the connection head of the temperature sensor
- Universal input for virtually any type of temperature sensor
- Can be configured via PC, HART 7 or optional local operation

Benefits

- Compact design
- Flexible mounting and center hole allow you to select your preferred type of installation
- Galvanic isolation
- Test terminals for ammeter
- Diagnostics LED (green/red)
- Input monitoring
  Wire break and short-circuit
- Self-monitoring
- Configuration status stored in EEPROM
- SIL2/3 (with order note C20)
- Expanded diagnostic functions, such as slave pointer, operating hours counter, etc.
- Special characteristic
- Electromagnetic compatibility according to DIN EN 61326 and NE21

Application

SITRANS TH320 transmitters can be used in all sectors. Its compact size means that it can be installed in connection heads of type B or larger. The following sensors/signal sources can be connected over their universal input module:

- Resistance thermometer (2-wire, 3-wire, 4-wire connection)
- Thermocouples
- Linear resistance, potentiometer and DC voltage sources

With HART communications interface:

- The output signal is a load-independent direct current from 4 to 20 mA in accordance with the input characteristic, superimposed by the digital HART signal.

Transmitters of the "intrinsically safe or Zone 2 increased safety" type of protection can be installed in hazardous areas. The device meets the requirements of the EU Directive 2014/34/EU (ATEX), the FM and CSA regulations as well as other national approvals.

© Siemens 2020

Function

Without HART communications interface

For the SITRANS TH320 without HART functionality, parameters are assigned with the PC. A special modem and the software tool SIPROM T are available for this purpose.

With HART communications interface

- The SITRANS TH320 is configured via HART. The configuration can be carried out using a handheld communicator or, more conveniently, with a HART modem and the SIMATIC PDM configuration software. The configuration data is then permanently stored in the non-volatile memory (EEPROM).

After correct connection of input and supply voltage, the transmitter outputs a temperature-linear output signal and the diagnostics LED is green. In case of external errors, e.g. sensor short circuit or interruption, the LED flashes red; an internal error is indicated by a permanent red light.

An ammeter can be connected at any time for checking and plausibility via the test terminals. The output current can be read without any interruption, or even without opening the current loop.

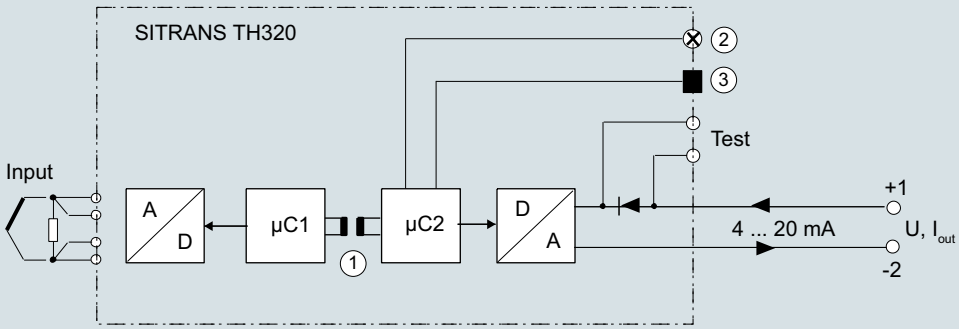

Input		Output	
A/D	Analog-digital converter	µC2	Microcontroller, primary circuit
µC1	Microcontroller, secondary circuit	D/A	Digital-analog converter
		U	Supply Voltage
		I_{out}	Output current
1	Galvanic isolation	2	LED
		3	Extension port

SITRANS TH320 function block diagram

© Siemens 2020

Technical specifications

General	
Supply voltage[1) 2)]	
• Without explosion protection (non-Ex)	7.5 ... 48 V DC
• with explosion protection (Ex i)	7.5 ... 30 V DC
Additional minimum supply voltage when using test terminals	0.8 V
Maximum power loss	≤ 850 mW
Minimum load resistance at supply voltage > 37 V	(V_{supply} - 37 V)/23 mA
Insulation voltage, test/operation	
• Without explosion protection (non-Ex)	2.5 kV AC/55 V AC
• with explosion protection (Ex i)	2.5 kV AC/42 V AC
Polarity protection	All inputs and outputs
Write protection	Open circuits or software
Warming-up time	< 5 min
Starting time	< 2.75 s
Programming	HART
Signal-to-noise ratio	> 60 dB
Long-term stability	Better than: • ± 0.05% of measuring span/year • ± 0.18% of measuring span/5 years
Response time	4 ... 20 mA: ≤ 55 ms HART: ≤ 75 ms (typically 70 ms)
Programmable damping	0 ... 60 s
Signal dynamic	
• Input	24 bit
• Output	18 bit
Influence of change in supply voltage	< 0.005% of measuring span/V DC
Input	
Resistance thermometer (RTD)	
Input type	
• Pt10 ... 10000	• IEC 60751 • JIS C 1604-8 • GOST 6651_2009 • Callendar-Van Dusen
• Ni10 ... 10000	• DIN 43760-1987 • GOST 6651-2009/OIML R84:2003
• Cu5 ... 1000	• Edison Copper Winding No. 15 • GOST 6651-2009/OIML R84:2003
Type of connection	2-wire, 3-wire or 4-wire
Line resistance per wire	Max. 50 Ω
Input current	< 0.15 mA
Effect of the line resistance (with 3-wire and 4-wire connections)	< 0.002 Ω/Ω
Cable, wire-wire capacity	
• Pt1000, Pt10000 (IEC 60751 and JIS C 1604-8)	Max. 30 nF
• All other input types	Max. 50 nF
Fault detection, programmable	None, short-circuited, defective, short-circuited or defective **Note** When the low limit for the configured input type is below the constant detection limit for short-circuited inputs, the detection of short circuits is disabled regardless of the configuration of the fault detection.
Detection limit for short-circuited input	15 Ω
Fault detection time (RTD)	≤ 75 ms (typically 70 ms)
Fault detection time (for 3-wire and 4-wire)	≤ 2 000 ms

Thermocouples (TC)	
Input type	
• B	IEC 60584-1
• E	IEC 60584-1
• J	IEC 60584-1
• K	IEC 60584-1
• L	DIN 43710
• Lr	GOST 3044-84
• N	IEC 60584-1
• R	IEC 60584-1
• S	IEC 60584-1
• T	IEC 60584-1
• U	DIN 43710
• W3	ASTM E988-96
• W5	ASTM E988-96
• LR	GOST 3044-84
Cold junction compensation (CJC)	Constant, internal or external over Pt100 or Ni100 RTD
• Temperature range internal CJC	-50 ... +100 °C (-58 ... +212 °F)
• Connection external CJC	2-wire or 3-wire
• External CJC, line resistance per wire (for 3-wire and 4-wire connections)	50 Ω
• Effect of the line resistance (with 3-wire and 4-wire connections)	< 0.002 Ω/Ω
• Input current external CJC	< 0.15 mA
• Temperature range external CJC	-50 ... +135 °C (-58 ... +275 °F)
• Cable, wire-wire capacity	Max. 50 nF
• Total line resistance	Max. 10 kΩ
• Fault detection, programmable	None, short-circuited, defective, short-circuited or defective **Note** The short-circuited fault detection only applies to the CJC input.
• Fault detection time (TC)	≤ 75 ms (typically 70 ms)
• Fault detection time, external CJC (for 3-wire and 4-wire)	≤ 2 000 ms
Linear resistance	
Input range	0 ... 100 kΩ
Minimum measuring span	25 Ω
Type of connection	2-wire, 3-wire or 4-wire
Line resistance per wire	Max. 50 Ω
Input current	< 0.15 mA
Effect of the line resistance (with 3-wire and 4-wire connections)	< 0.002 Ω/Ω
Cable, wire-wire capacity	
• R > 400 Ω	Max. 30 nF
• R ≤ 400 Ω	Max. 50 nF
Fault detection, programmable	None, defective
Potentiometers	
Input range	10 ... 100 kΩ
Minimum measuring span	25 Ω
Type of connection	3-wire or 4-wire
Line resistance per wire	Max. 50 Ω
Input current	< 0.15 mA
Effect of the line resistance (with 4-wire and 5-wire connections)	< 0.002 Ω/Ω
Cable, wire-wire capacity	
• R > 400 Ω	Max. 30 nF
• R ≤ 400 Ω	Max. 50 nF

© Siemens 2020

Fault detection, programmable	None, short-circuited, defective, short-circuited or defective **Note** When the configured potentiometer size is below the constant detection limit for short-circuited inputs, the detection of short circuits is disabled regardless of the configuration of the fault detection.
Detection limit for short-circuited input	15 Ω
Fault detection time, wiper arm (no short-circuit detection)	≤ 75 ms (typically 70 ms)
Fault detection time, element	≤ 2 000 ms
Fault detection time (for 4-wire and 5-wire)	≤ 2 000 ms
Voltage input	
Measuring range	
• Unipolar	-100 ... 1700 mV
• Bipolar	-800 ... +800 mV
Minimum measuring span	2.5 mV
Input resistance	10 MΩ
Cable, wire-wire capacity	
• Input range: -100 ... 1700 mV	Max. 30 nF
• Input range: -20 ... 100 mV	Max. 50 nF
Fault detection, programmable	None, defective
Fault detection time	≤ 75 ms (typically 70 ms)
Output and HART communication	
Normal range, programmable	3.8 ... 20.5 mA/20.5 ... 3.8 mA
Extended range (output limits), programmable	3.5 ... 23 mA/23 ... 3.5 mA
Programmable input/output limits	
• Fault current	Enable/disable
• Fault current setting	3.5 ... 23 mA
Update time	10 ms
Load (with current output)	≤ (V_{Supply} - 7.5)/0.023 Ω
Load stability	< 0.01% of meas. span/100 Ω (measuring span = currently selected range)
Input fault detection, programmable (detection of input short circuits is ignored with TC and voltage inputs)	3.5 ... 23 mA
NAMUR NE43 Upscale	> 21 mA
NAMUR NE43 Downscale	< 3.6 mA
HART protocol versions	HART 7
Measuring accuracy	
Input accuracy	See "Input accuracy" table
Output accuracy	See "Output accuracy" table
Rated conditions	
Ambient temperature	-50 ... +85 °C (-58 ... +185 °F)
Ambient temperature for devices with functional safety	-40 ... +80 °C (-40 ... +176 °F)
Storage temperature	-50 ... +85 °C (-58 ... +185 °F)
Reference temperature for sensor calibration	24 °C ±1.0 °C (75.2 °F ±1.8 °F)
Relative humidity	< 99% (no condensation)
Degree of protection	
• Transmitter enclosure	IP68
• Terminals	IP00

Design	
Weight	50 g (0.11 lb)
Maximum core cross-section	1 x 1.5 mm² (stranded wire)
Tightening torque for clamping screws	0.4 Nm
Vibrations	IEC 60068-2-6
• 2 ... 25 Hz	± 1.6 mm (0.07 inch)
• 25 ... 100 Hz	± 4 g
Certificates and approvals	
Explosion protection ATEX/IECEx and others	
Certificates[3]	DEKRA 17ATEX0116 X IECEx DEK 17.0054X A5E43700604A-2018X
"Intrinsic safety ia/ib" type of protection	For use in Zone 0, 1, 2, 20, 21, 22
• ATEX	II 1 G Ex ia IIC T6 ... T4 Ga II 2(1) G Ex ib [ia Ga] IIC T6 ... T4 Gb II 1 D Ex ia IIIC Da I M1 Ex ia I Ma
• IECEx and others	Ex ia IIC T6 ... T4 Ga Ex ib [ia Ga] IIC T6 ... T4 Gb Ex ia IIIC Da Ex ia I Ma
"Intrinsic safety ic" type of protection	For use in Zones 2 and 22
• ATEX	II 2 G Ex ic IIC T6…T4 Gc II 2 D Ex ic IIIC Dc
• IECEx and others	Ex ic IIC T6 ... T4 Gc Ex ic IIIC Dc
"Non-sparking/increased safety nA/ec" type of protection	For use in Zones 2 and 22
• ATEX	II 2 G Ex nA IIC T6…T4 Gc II 2 G Ex ec IIC T6…T4 Gc
• IECEx and others	Ex nA IIC T6 ... T4 Gc Ex ec IIC T6 ... T4 Gc
Explosion protection CSA/FM for Canada and USA	
Certificates	CSA 1861385 FM18CA0024 FM18US0046
"Intrinsic safety ia" type of protection	IS, CL I, Div 1, GP ABCD, T6 ... T4 Ex ia IIC T6 … T4 Ga AEx ia IIC T6 … T4 Ga or: Ex ib [ia Ga] IIC T6…T4 Gb AEx ib [ia Ga] IIC T6…T4 Gb
"Non incendive field wiring NIFW" type of protection	NIFW, CL I, Div 2, GP ABCD T6 ... T4
"Non incendive NI" type of protection	NI, CL I, Div 2, GP ABCD T6...T4 Ex nA IIC T6 ... T4 Gc AEx nA IIC T6 ... T4 Gc

1) Note that the minimum supply voltage must correspond to the value measured at the terminals of the SITRANS TH320.
All external voltage drops must be taken into consideration.

2) Protect the device from overvoltage with the help of a suitable power supply or suitable overvoltage protection equipment.

3) Additional available certificates are listed on the Internet at http://www.siemens.com/processinstrumentation/certificates

© Siemens 2020

Measuring ranges/Minimum measuring span

RTD

Input type	Standard	Measuring range in °C (°F)	α_0 in °C^{-1} (°F^{-1})	Minimum measuring span in °C (°F)
Pt10 ... 10000	IEC 60751	-200 ... +850 (-328 ... +1 562)	0.003851 (0.002139)	10 (50)
	JIS C 1604-8	-200 ... +649 (-328 ... +1 200)	0.003916 (0.002176)	10 (50)
	GOST 6651_2009	-200 ... +850 (-328 ... +1 562)	0.003910 (0.002172)	10 (50)
	Callendar-Van Dusen	-200 ... +850 (-328 ... +1 562)	-	10 (50)
Ni10 ... 10000	DIN 43760-1987	-60 ... +250 (-76 ... +482)	0.006180 (0.003433)	10 (50)
	GOST 6651-2009/OIML R84:2003	-60 ... +180 (-76 ... +356)	0.006170 (0.003428)	10 (50)
Cu5 ... 1000	Edison Copper Winding No. 15	-200 ... +260 (-328 ... +500)	0.004270 (0.002372)	100 (212)
	GOST 6651-2009/OIML R84:2003	-180 ... +200 (-292 ... +392)	0.004280 (0.002378)	100 (212)
	GOST 6651-94	-50 ... +200 (-58 ... +392)	0.004260 (0.002367)	100 (212)

TC

Input type	Standard	Measuring range in °C (°F)	Minimum measuring span in °C (°F)
B	IEC 60584-1	0 (85) ... 1 820 (32 (185) ... 3 308)	100 (212)
E	IEC 60584-1	-200 ... +1 000 (-392 ... +1 832)	50 (122)
J	IEC 60584-1	-100 ... +1 200 (-212 ... +2 192)	50 (122)
K	IEC 60584-1	-180 ... +1 372 (-356 ... +2 502)	50 (122)
L	DIN 43710	-200 ... +900 (-392 ... +1 652)	50 (122)
Lr	GOST 3044-84	-200 ... +800 (-392 ... +1 472)	50 (122)
N	IEC 60584-1	-180 ... +1 300 (-356 ... +2 372)	50 (122)
R	IEC 60584-1	-50 ... +1 760 (-122 ... +3 200)	100 (212)
S	IEC 60584-1	-50 ... +1 760 (-122 ... +3 200)	100 (212)
T	IEC 60584-1	-200 ... +400 (-392 ... +752)	50 (122)
U	DIN 43710	-200 ... +600 (-392 ... +1 112)	50 (122)
W3	ASTM E988-96	0 ... 2 300 (32 ... 4 172)	100 (212)
W5	ASTM E988-96	0 ... 2 300 (32 ... 4 172)	100 (212)
LR	GOST 3044-84	-200 ... +800 (-392 ... +1472)	50 (122)

Input accuracy

Basic values

Input type	Basic accuracy	Temperature coefficient[1)]
RTD		
Pt10	≤ ±0.8 °C (1.44 °F)	≤ ±0.020 °C/°C (°F/°F)
Pt20	≤ ±0.4 °C (0.72 °F)	≤ ±0.010 °C/°C (°F/°F)
Pt50	≤ ±0.16 °C (0.288 °F)	≤ ±0.004 °C/°C (°F/°F)
Pt100	≤ ±0.04 °C (0.072 °F)	≤ ±0.002 °C/°C (°F/°F)
Pt200	≤ ±0.08 °C (0.144 °F)	≤ ±0.002 °C/°C (°F/°F)
Pt500	$T_{max.}$ < 180 °C (356 °F) = ≤ ±0.08 °C (0.144 °F) $T_{max.}$ > 180 °C (356 °F) = ≤ ±0.16 °C (0.288 °F)	≤ ±0.002 °C/°C (°F/°F)
Pt1000	≤ ±0.08 °C (0.144 °F)	≤ ±0.002 °C/°C (°F/°F)
Pt2000	$T_{max.}$ < 300 °C (572 °F) = ≤ ±0.08 °C (0.144 °F) $T_{max.}$ > 300 °C (572 °F) = ≤ ±0.4 °C (0.72 °F)	≤ ±0.002 °C/°C (°F/°F)
Pt10000	≤ ±0.16 °C (0.288 °F)	≤ ±0.002 °C/°C (°F/°F)
Pt x	Largest tolerance of neighboring points	Largest temperature coefficient of neighboring points
Ni10	≤ ±1.6 °C (2.88 °F)	≤ ±0.020 °C/°C (°F/°F)
Ni20	≤ ±0.8 °C (1.44 °F)	≤ ±0.010 °C/°C (°F/°F)
Ni50	≤ ±0.32 °C (0.576 °F)	≤ ±0.004 °C/°C (°F/°F)
Ni100	≤ ±0.16 °C (0.288 °F)	≤ ±0.002 °C/°C (°F/°F)
Ni120	≤ ±0.16 °C (0.288 °F)	≤ ±0.002 °C/°C (°F/°F)
Ni200	≤ ±0.16 °C (0.288 °F)	≤ ±0.002 °C/°C (°F/°F)
Ni500	≤ ±0.16 °C (0.288 °F)	≤ ±0.002 °C/°C (°F/°F)
Ni1000	≤ ±0.16 °C (0.288 °F)	≤ ±0.002 °C/°C (°F/°F)

© Siemens 2020

Input type	Basic accuracy	Temperature coefficient[1]
Ni2000	≤ ±0.16 °C (0.288 °F)	≤ ±0.002 °C/°C (°F/°F)
Ni10000	≤ ±0.32 °C (0.576 °F)	≤ ±0.002 °C/°C (°F/°F)
Ni x	Largest tolerance of neighboring points	Largest temperature coefficient of neighboring points
Cu5	≤ ±1.6 °C (2.88 °F)	≤ ±0.040 °C/°C (°F/°F)
Cu10	≤ ±0.8 °C (1.44 °F)	≤ ±0.020 °C/°C (°F/°F)
Cu20	≤ ±0.4 °C (0.72 °F)	≤ ±0.010 °C/°C (°F/°F)
Cu50	≤ ±0.16 °C (0.288 °F)	≤ ±0.004 °C/°C (°F/°F)
Cu100	≤ ±0.08 °C (0.144 °F)	≤ ±0.002 °C/°C (°F/°F)
Cu200	≤ ±0.08 °C (0.144 °F)	≤ ±0.002 °C/°C (°F/°F)
Cu500	≤ ±0.16 °C (0.288 °F)	≤ ±0.002 °C/°C (°F/°F)
Cu1000	≤ ±0.08 °C (0.144 °F)	≤ ±0.002 °C/°C (°F/°F)
Cu x	Largest tolerance of neighboring points	Largest temperature coefficient of neighboring points
Linear resistance		
0 ... 400 Ω	≤ ±40 mΩ	≤ ±2 mΩ/°C (1.11 mΩ/°F)
0 ... 100 kΩ	≤ ±4 Ω	≤ ±0.2 Ω/°C (0.11 Ω/°F)
Potentiometers		
0 ... 100%	< 0.05%	< ± 0.005%
Voltage input		
mV: -20 ... 100 mV	≤ ±5 µV	≤ ±0.2 µV/°C (0.11 µV/°F)
mV: -100 ... 1700 mV	≤ ±0.1 mV	≤ ±36 µV/°C (20 µV/°F)
mV: ± 800 mV	≤ ±0.1 mV	≤ ±32 µV/°C (17.8 µV/°F)
TC		
E	≤ ±0.2 °C (0.36 °F)	≤ ±0.025 °C/°C (°F/°F)
J	≤ ±0.25 °C (0.45 °F)	≤ ±0.025 °C/°C (°F/°F)
K	≤ ±0.25 °C (0.45 °F)	≤ ±0.025 °C/°C (°F/°F)
L	≤ ±0.35 °C (0.63 °F)	≤ ±0.025 °C/°C (°F/°F)
N	≤ ±0.4 °C (0.72 °F)	≤ ±0.025 °C/°C (°F/°F)
T	≤ ±0.25 °C (0.45 °F)	≤ ±0.025 °C/°C (°F/°F)
U	< 0 °C (32 °F) ≤ ±0.8 °C (1.44 °F) ≥ 0 °C (32 °F) ≤ ±0.4 °C (0.72 °F)	≤ ±0.025 °C/°C (°F/°F)
Lr	≤ ±0.2 °C (0.36 °F)	≤ ±0.1 °C/°C (°F/°F)
R	< 200 °C (392 °F) ≤ ±0.5 °C (0.9 °F) ≥ 200 °C (392 °F) ≤ ±1 °C (1.8 °F)	≤ ±0.1 °C/°C (°F/°F)
S	< 200 °C (392 °F) ≤ ±0.5 °C (0.9 °F) ≥ 200 °C (392 °F) ≤ ±1 °C (1.8 °F)	≤ ±0.1 °C/°C (°F/°F)
W3	≤ ±0.6 °C (1.08 °F)	≤ ±0.1 °C/°C (°F/°F)
W5	≤ ±0.4 °C (0.72 °F)	≤ ±0.1 °C/°C (°F/°F)
B[2]	≤ ±1 °C (1.8 °F)	≤ ±0.1 °C/°C (°F/°F)
B[3]	≤ ±3 °C (5.4 °F)	≤ ±0.1 °C/°C (°F/°F)
B[4]	≤ ±8 °C (14.4 °F)	≤ ±0.8 °C/°C (°F/°F)
B[5]	Not specified	Not specified
CJC (internal)	< ±0.5 °C (0.9 °F)	Included in basic accuracy
CJC (external)	≤ ±0.08 °C (0.144 °F)	≤ ±0.002 °C/°C (°F/°F)

1) Temperature coefficients correspond to the specified values or 0.002% of the input span, depending on which value is greater.
2) Accuracy of the specification range > 400 °C (752 °F)
3) Accuracy of the specification range > 160 °C (320 °F) < 400 °C (752 °F)
4) Accuracy of the specification range > 85 °C (185 °F) < 160 °C (320 °F)
5) Accuracy of the specification range < 85 °C (185 °F)

Output accuracy

Output type	Basic accuracy	Temperature coefficient
Analog output	≤ ±1.6 µA (0.01% of the full output span)	≤ ±0.48 µA/K (≤ ±0.003% of the full output span/K)

© Siemens 2020

2

Selection and ordering data

	Article No.
SITRANS TH320 head transmitter with 1 input ↗	**7NG031**
	■ - ■ ■ ■ ■ ■ - 0 ■ ■ ■
↗ Click on the Article No. for the online configuration in the PIA Life Cycle Portal.	
Communication	
With HART	**0**
2-wire, 4 ... 20 mA	**7**
Primary value output	
Input 1	**0**
Input 1, type	
RTD	
• Pt100 (IEC), 3-wire	**B**
• Pt100 (IEC), 4-wire	**C**
• Pt1000 (IEC), 3-wire	**D**
• Pt1000 (IEC), 4-wire	**E**
TC	
• Type B	**F**
• Type E	**G**
• Type J	**H**
• Type K	**J**
• Type L	**K**
• Type N	**L**
• Type R	**N**
• Type S	**P**
• Type T	**Q**
Potentiometer, 4-wire	**R**
Input 1, type customer-specific	
Define customer-specific input configurations in V options	**Y**
Input 2, type	
Without input 2	**A**
CJC configuration for TC	
Without CJC	**0**
Internal CJC	**1**
External CJC Pt100 (IEC), 3-wire	**3**
External CJC Ni100 (DIN), 3-wire	**6**
Materials not in contact with media	
Without	**0**
Type of protection	
General safety (non-Ex); CE, RCM, FM, KCC, EAC	**A**
Intrinsic safety (Ex i) / Non-incendive field wiring (NIFW) / Increased safety zone 2 (Ex ec) / Non incendive (NI) (ATEX, IECEx, EACEx, CSA, FM, NEPSI, Inmetro)	**N**
Electrical connection/cable entry	
Without	**A**
Local HMI	
Without display	**0**

Options	Order code
Append "**-Z**" to Article No., add order code and, if applicable, free text.	
Manufacturer declarations	
Quality inspection certificate, 5-point factory calibration (IEC 60770-2)	**C11**
Certificates for functional safety	
Functional safety SIL2/3 (IEC 61508)	**C20**
Device options	
PDF file with device settings	**D10**
Without labeling of the measuring range on the TAG plate	**D41**
Jumper plug set on device for write protection	**D81**
Jumper plug set on device for fault current > 21 mA (instead of < 3.6 mA) (only non-SIL)	**D82**
Input 1: TC	
Type C W5	**V01**
Type D W3	**V02**
Type U	**V03**
Type Lr	**V04**
Input 1: RTD	
Pt x (IEC), 3-wire, define RTD factor x in option Y21	**V61**
Pt x (IEC), 4-wire, define RTD factor x in option Y21	**V62**
Pt x (JIS C1604-81), 3-wire, define RTD factor x in option Y21	**V64**
Pt x (JIS C1604-81), 4-wire, define RTD factor x in option Y21	**V65**
Pt x (GOST 6651-2009), 3-wire, define RTD factor x in option Y21	**V67**
Pt x (GOST 6651-2009), 4-wire, define RTD factor x in option Y21	**V68**
Ni x (DIN 43760-87), 3-wire, define RTD factor x in option Y21	**V70**
Ni x (DIN 43760-87), 4-wire, define RTD factor x in option Y21	**V71**
Ni x (GOST 6651-2009), 3-wire, define RTD factor x in option Y21	**V73**
Ni x (GOST 6651-2009), 4-wire, define RTD factor x in option Y21	**V74**
Cu x (ECW-15), 2-wire, define line resistance value in option Y51 and RTD factor x in option Y21	**V75**
Cu x (ECW-15), 3-wire, define RTD factor x in option Y21	**V76**
Cu x (ECW-15), 4-wire, define RTD factor x in option Y21	**V77**
Cu x (GOST 6651-94), 2-wire, define line resistance value in option Y51 and RTD factor x in option Y21	**V78**
Cu x (GOST 6651-94), 3-wire, define RTD factor x in option Y21	**V79**
Cu x (GOST 6651-94), 4-wire, define RTD factor x in option Y21	**V80**
Cu x (GOST 6651-2009), 2-wire, define line resistance value in option Y51 and RTD factor x in option Y21	**V81**
Cu x (GOST 6651-2009), 3-wire, define RTD factor x in option Y21	**V82**
Cu x (GOST 6651-2009), 4-wire, define RTD factor x in option Y21	**V83**

© Siemens 2020

Options	Order code
Append "**-Z**" to Article No., add order code and, if applicable, free text.	
Device settings	
Measuring range setting temperature input: Start of scale value (max. 5 characters), full scale value (max. 5 characters), unit (°C, °F, °Ra, K)	**Y01**
Customer-specific programming in plain text (n-lines)	**Y09**
Long tag (device parameter, max. 32 characters), adhesive label	**Y15**
Measuring point description (device parameter, max. 32 characters), adhesive label	**Y16**
Input 1: RTD factor; e.g. factor "200" = Pt200, adhesive label	**Y21**

Accessories

	Article No.
Additional accessories for assembly, connection and transmitter configuration, see page 2/251.	
Modems	
Modem with USB interface	**7MF4997-1DB**
Modem with USB interface and SIPROM T software	**7NG3092-8KN**
SIMATIC PDM parameterization software	See Catalog FI 01 section 8
Mounting rail adapter for head transmitter (Quantity delivered: 5 units)	**7NG3092-8KA**
Connecting cable 4-wire, 200 mm (7.97 inch), for input connections when using head transmitters in the high hinged cover (set with 5 units)	**7NG3092-8KC**

Ordering example

7NG0310-0BA00-0AA0-Z Y01

Y01: -10 ... +100 °C

Factory setting

- Pt100 (IEC 60751); 3-wire connection
- Measuring range: 0 ... 100 °C (32 ... 212 °F)
- Fault current
  - Device error: < 3.6 mA
  - Input circuit wire break: 22.8 mA
  - Input circuit short circuit: 22.4 mA
  - Input monitoring wire break and short-circuit
- No trimming of input and output (offset)
- Damping 0.0 s

Dimensional drawings

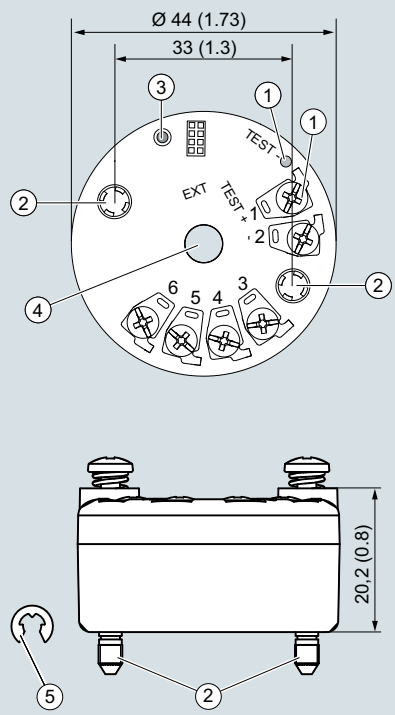

1 Test terminal
2 Mounting screw M4
3 LED
4 Internal diameter of center hole 6.3 (0.25)
5 Lock washer DIN 6799 - 3.2 A2

1(+) and 2(-) Output terminals
3, 4, 5 and 6 Input terminals

SITRANS TH320, dimensions and pin assignment, dimensions in mm (inch)

© Siemens 2020

Circuit diagrams

Connections

Input connection

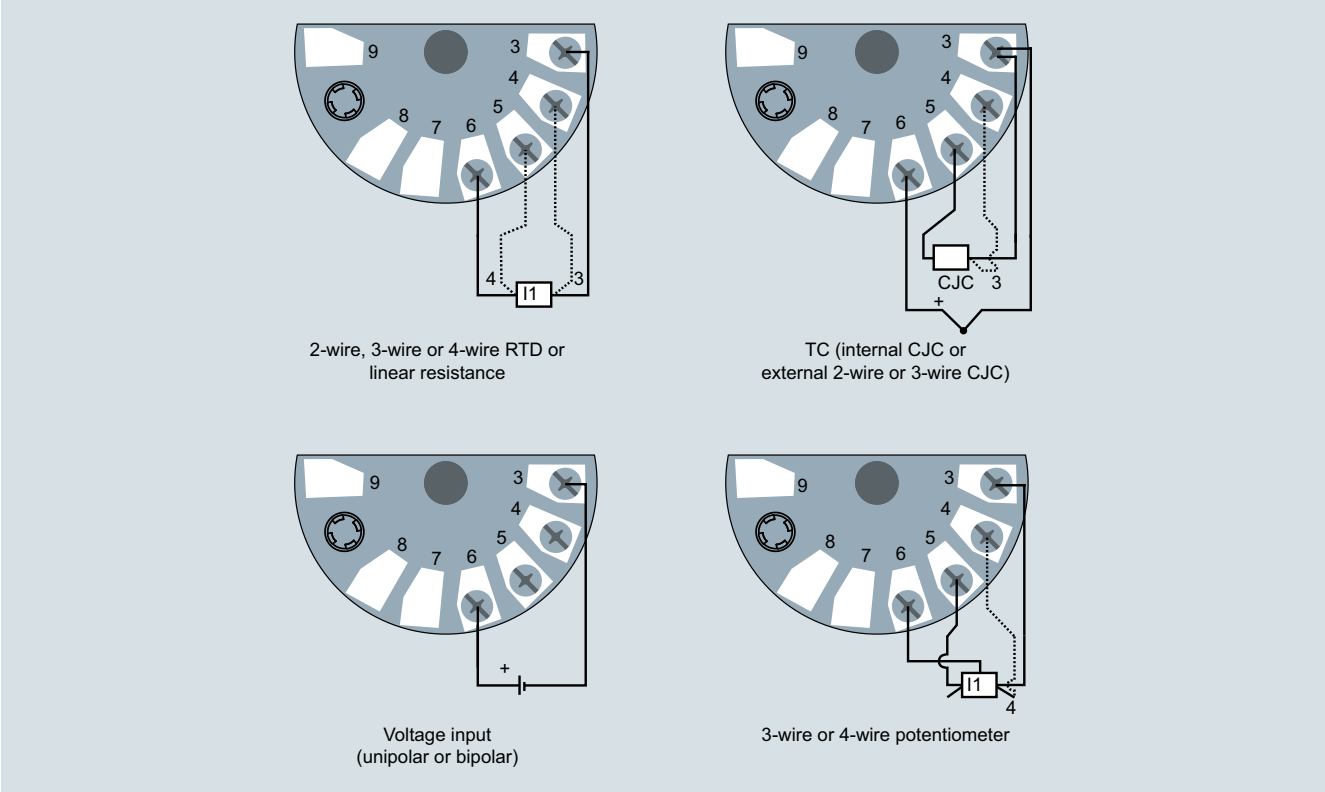

SITRANS TH320, input connection assignment

Output connection

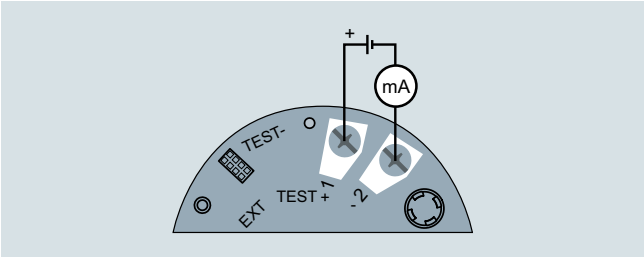

SITRANS TH320, output connection assignment

© Siemens 2020

Overview

- 2-wire head transmitter with HART communications interface
- Mounting in the connection head of the temperature sensor
- Universal input for virtually any type of temperature sensor
- Connection of two independent input circuits for redundant operation (high input availability)
- Input drift detection
- Configurable via HART 7

Benefits

- Compact design
- Connection of two independent input circuits for redundant operation (high input availability)
- Flexible mounting and center hole allow you to select your preferred type of installation
- Galvanic isolation
- Test terminals for ammeter
- Diagnostics LED (green/red)
- Input monitoring
  wire break, short circuit and drift
- Self-monitoring
- Configuration status stored in EEPROM
- SIL2/3 (with order note C20)
- Expanded diagnostic functions, such as slave pointer, operating hours counter, etc.
- Special characteristic
- Electromagnetic compatibility according to DIN EN 61326 and NE21

Application

The SITRANS TH420 transmitter with two inputs can be used in all sectors. Its compact size means that it can be installed in connection heads of type B or larger. Due to its universal input module, the following sensors and signal sources can be connected in redundant operation (high input availability):

- 2 resistance thermometers (2-wire, 3-wire, 4-wire connection)
- 2 thermocouples
- 2 linear resistors, potentiometer and DC voltage sources

The output signal is a load-independent direct current from 4 to 20 mA in accordance with the input characteristic, superimposed by the digital HART signal.

The dual input mode also supports drift detection of the inputs, whereby maintenance intervals can be more easily planned.

Transmitters of the "intrinsically safe or Zone 2 increased safety" type of protection can be installed in hazardous areas. The device meets the requirements of the EU Directive 2014/34/EU (ATEX), the FM and CSA regulations as well as other national approvals.

© Siemens 2020

Function

The SITRANS TH420 is configured via HART. The configuration can be carried out using a handheld communicator or, more conveniently, with a HART modem and the SIMATIC PDM configuration software. The configuration data are then permanently stored in the non-volatile memory (EEPROM).

After correct connection of input and supply voltage, the transmitter outputs a temperature-linear output signal and the diagnostics LED is green. In case of external errors, e.g. sensor short circuit or interruption, the LED flashes red; an internal error is indicated by a permanent red light.

An ammeter can be connected at any time for checking and plausibility via the test terminals. The output current can be read without any interruption, or even without opening the current loop.

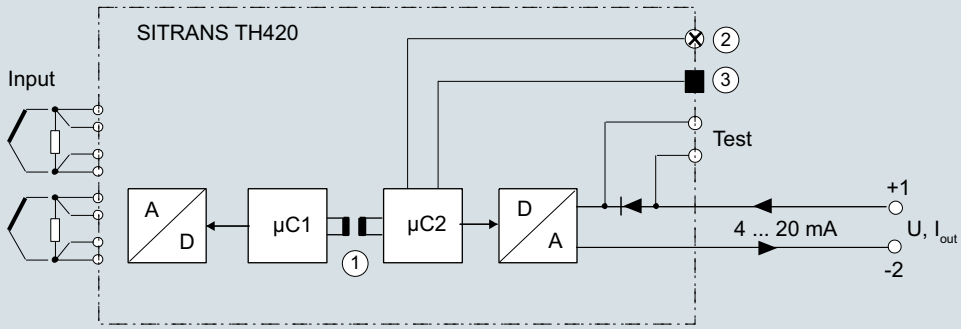

Input		Output	
A/D	Analog-digital converter	µC2	Microcontroller, primary circuit
µC1	Microcontroller, secondary circuit	D/A	Digital-analog converter
		U	Supply Voltage
		I_{out}	Output current
1	Galvanic isolation	2	LED
		3	Extension port

SITRANS TH420, function block diagram

© Siemens 2020

Technical specifications

General	
Supply voltage[1) 2)]	
• Without explosion protection (non-Ex)	7.5 ... 48 V DC
• with explosion protection (Ex i)	7.5 ... 30 V DC
Additional minimum supply voltage when using test terminals	0.8 V
Maximum power loss	≤ 850 mW
Minimum load resistance at supply voltage > 37 V	(V_{supply} - 37 V)/23 mA
Insulation voltage, test/operation	
• Without explosion protection (non-Ex)	2.5 kV AC/55 V AC
• with explosion protection (Ex i)	2.5 kV AC/42 V AC
Polarity protection	All inputs and outputs
Write protection	Open circuits or software
Warming-up time	< 5 min
Starting time	< 2.75 s
Programming	HART
Signal-to-noise ratio	> 60 dB
Long-term stability	Better than: • ± 0.05% of measuring span/year • ± 0.18% of measuring span/5 years
Response time	≤ 75 ms (typically 70 ms)
Programmable damping	0 ... 60 s
Signal dynamic	
• Input	24 bit
• Output	18 bit
Influence of change in supply voltage	< 0.005% of measuring span/V DC
Input	
Resistance thermometer (RTD)	
Input type	
• Pt10 ... 10000	• IEC 60751 • JIS C 1604-8 • GOST 6651_2009 • Callendar-Van Dusen
• Ni10 ... 10000	• DIN 43760-1987 • GOST 6651-2009/OIML R84:2003
• Cu5 ... 1000	• Edison Copper Winding No. 15 • GOST 6651-2009/OIML R84:2003
Type of connection	2-wire, 3-wire or 4-wire
Line resistance per wire	Max. 50 Ω
Input current	< 0.15 mA
Effect of the line resistance (with 3-wire and 4-wire connections)	< 0.002 Ω/Ω
Cable, wire-wire capacity	
• Pt1000, Pt10000 (IEC 60751 and JIS C 1604-8)	Max. 30 nF
• All other input types	Max. 50 nF
Fault detection, programmable	None, short-circuited, defective, short-circuited or defective **Note** When the low limit for the configured input type is below the constant detection limit for short-circuited inputs, the detection of short circuits is disabled regardless of the configuration of the fault detection.
Detection limit for short-circuited input	15 Ω
Fault detection time (RTD)	≤ 75 ms (typically 70 ms)
Fault detection time (for 3-wire and 4-wire)	≤ 2 000 ms

Thermocouples (TC)	
Input type	
• B	IEC 60584-1
• E	IEC 60584-1
• J	IEC 60584-1
• K	IEC 60584-1
• L	DIN 43710
• Lr	GOST 3044-84
• N	IEC 60584-1
• R	IEC 60584-1
• S	IEC 60584-1
• T	IEC 60584-1
• U	DIN 43710
• W3	ASTM E988-96
• W5	ASTM E988-96
• LR	GOST 3044-84
Cold junction compensation (CJC)	Constant, internal or external over Pt100 or Ni100 RTD
• Temperature range internal CJC	-50 ... +100 °C (-58 ... +212 °F)
• Connection external CJC	2-wire, 3-wire or 4-wire
• External CJC, line resistance per wire (for 3-wire and 4-wire connections)	50 Ω
• Effect of the line resistance (with 3-wire and 4-wire connections)	< 0.002 Ω/Ω
• Input current external CJC	< 0.15 mA
• Temperature range external CJC	-50 ... +135 °C (-58 ... +275 °F)
• Cable, wire-wire capacity	Max. 50 nF
• Total line resistance	Max. 10 kΩ
• Fault detection, programmable	None, short-circuited, defective, short-circuited or defective **Note** The short-circuited fault detection only applies to the CJC input.
• Fault detection time (TC)	≤ 75 ms (typically 70 ms)
• Fault detection time, external CJC (for 3-wire and 4-wire)	≤ 2 000 ms
Linear resistance	
Input range	0 ... 100 kΩ
Minimum measuring span	25 Ω
Type of connection	2-wire, 3-wire or 4-wire
Line resistance per wire	Max. 50 Ω
Input current	< 0.15 mA
Effect of the line resistance (with 3-wire and 4-wire connections)	< 0.002 Ω/Ω
Cable, wire-wire capacity	
• R > 400 Ω	Max. 30 nF
• R ≤ 400 Ω	Max. 50 nF
Fault detection, programmable	None, defective
Potentiometers	
Input range	10 ... 100 kΩ
Minimum measuring span	25 Ω
Type of connection	3-wire, 4-wire or 5-wire
Line resistance per wire	Max. 50 Ω
Input current	< 0.15 mA
Effect of the line resistance (with 4-wire and 5-wire connections)	< 0.002 Ω/Ω
Cable, wire-wire capacity	
• R > 400 Ω	Max. 30 nF
• R ≤ 400 Ω	Max. 50 nF

© Siemens 2020

Fault detection, programmable	None, short-circuited, defective, short-circuited or defective **Note** When the configured potentiometer size is below the constant detection limit for short-circuited inputs, the detection of short circuits is disabled regardless of the configuration of the fault detection.
Detection limit for short-circuited input	15 Ω
Fault detection time, wiper arm (no short-circuit detection)	≤ 75 ms (typically 70 ms)
Fault detection time, element	≤ 2 000 ms
Fault detection time (for 4-wire and 5-wire)	≤ 2 000 ms
Voltage input	
Measuring range	
• Unipolar	-100 ... 1700 mV
• Bipolar	-800 ... +800 mV
Minimum measuring span	2.5 mV
Input resistance	10 MΩ
Cable, wire-wire capacity	
• Input range: -100 ... 1700 mV	Max. 30 nF
• Input range: -20 ... 100 mV	Max. 50 nF
Fault detection, programmable	None, defective
Fault detection time	≤ 75 ms (typically 70 ms)
Output and HART communication	
Normal range, programmable	3.8 ... 20.5 mA/20.5 ... 3.8 mA
Extended range (output limits), programmable	3.5 ... 23 mA/23 ... 3.5 mA
Programmable input/output limits	
• Fault current	Enable/disable
• Fault current setting	3.5 ... 23 mA
Update time	10 ms
Load (with current output)	≤ (V_{Supply} - 7.5)/0.023 Ω
Load stability	< 0.01% of meas. span/100 Ω (measuring span = currently selected range)
Input fault detection, programmable (detection of input short circuits is ignored with TC and voltage inputs)	3.5 ... 23 mA
NAMUR NE43 Upscale	> 21 mA
NAMUR NE43 Downscale	< 3.6 mA
HART protocol versions	HART 7
Measuring accuracy	
Input accuracy	See "Input accuracy" table
Output accuracy	See "Output accuracy" table
Rated conditions	
Ambient temperature	-50 ... +85 °C (-58 ... +185 °F)
Ambient temperature for devices with functional safety	-40 ... +80 °C (-40 ... +176 °F)
Storage temperature	-50 ... +85 °C (-58 ... +185 °F)
Reference temperature for sensor calibration	24 °C ±1.0 °C (75.2 °F ±1.8 °F)
Relative humidity	< 99% (no condensation)
Degree of protection	
• Transmitter enclosure	IP68
• Terminals	IP00

Design	
Weight	50 g (0.11 lb)
Maximum core cross-section	1 x 1.5 mm² (stranded wire)
Tightening torque for clamping screws	0.4 Nm
Vibrations	IEC 60068-2-6
• 2 ... 25 Hz	± 1.6 mm (0.07 inch)
• 25 ... 100 Hz	± 4 g
Certificates and approvals	
Explosion protection ATEX/IECEx and others	
Certificates[3]	DEKRA 17ATEX0116 X IECEx DEK 17.0054X A5E43700604A-2018X
"Intrinsic safety ia/ib" type of protection	For use in Zone 0, 1, 2, 20, 21, 22
• ATEX	II 1 G Ex ia IIC T6 ... T4 Ga II 2(1) G Ex ib [ia Ga] IIC T6 ... T4 Gb II 1 D Ex ia IIIC Da I M1 Ex ia I Ma
• IECEx and others	Ex ia IIC T6 ... T4 Ga Ex ib [ia Ga] IIC T6 ... T4 Gb Ex ia IIIC Da Ex ia I Ma
"Intrinsic safety ic" type of protection	For use in Zones 2 and 22
• ATEX	II 2 G Ex ic IIC T6…T4 Gc II 2 D Ex ic IIIC Dc
• IECEx and others	Ex ic IIC T6 ... T4 Gc Ex ic IIIC Dc
"Non-sparking/increased safety nA/ec" type of protection	For use in Zones 2 and 22
• ATEX	II 2 G Ex nA IIC T6…T4 Gc II 2 G Ex ec IIC T6…T4 Gc
• IECEx and others	Ex nA IIC T6 ... T4 Gc Ex ec IIC T6 ... T4 Gc
Explosion protection CSA/FM for Canada and USA	
Certificates	CSA 1861385 FM18CA0024 FM18US0046
"Intrinsic safety ia" type of protection	IS, CL I, Div 1, GP ABCD, T6 ... T4 Ex ia IIC T6 … T4 Ga AEx ia IIC T6 … T4 Ga or: Ex ib [ia Ga] IIC T6…T4 Gb AEx ib [ia Ga] IIC T6…T4 Gb
"Non incendive field wiring NIFW" type of protection	NIFW, CL I, Div 2, GP ABCD T6 ... T4
"Non incendive NI" type of protection	NI, CL I, Div 2, GP ABCD T6...T4 Ex nA IIC T6 ... T4 Gc AEx nA IIC T6 ... T4 Gc

1) Note that the minimum supply voltage must correspond to the value measured at the terminals of the SITRANS TH420.
All external voltage drops must be taken into consideration.

2) Protect the device from overvoltage with the help of a suitable power supply or suitable overvoltage protection equipment.

3) Additional available certificates are listed on the Internet at http://www.siemens.com/processinstrumentation/certificates

© Siemens 2020

Measuring ranges/Minimum measuring span

RTD

Input type	Standard	Measuring range in °C (°F)	α_0 in °C^{-1} (°F^{-1})	Minimum measuring span in °C (°F)
Pt10 ... 10000	IEC 60751	-200 ... +850 (-328 ... +1 562)	0.003851 (0.002139)	10 (50)
	JIS C 1604-8	-200 ... +649 (-328 ... +1 200)	0.003916 (0.002176)	10 (50)
	GOST 6651_2009	-200 ... +850 (-328 ... +1 562)	0.003910 (0.002172)	10 (50)
	Callendar-Van Dusen	-200 ... +850 (-328 ... +1 562)	-	10 (50)
Ni10 ... 10000	DIN 43760-1987	-60 ... +250 (-76 ... +482)	0.006180 (0.003433)	10 (50)
	GOST 6651-2009/OIML R84:2003	-60 ... +180 (-76 ... +356)	0.006170 (0.003428)	10 (50)
Cu5 ... 1000	Edison Copper Winding No. 15	-200 ... +260 (-328 ... +500)	0.004270 (0.002372)	100 (212)
	GOST 6651-2009/OIML R84:2003	-180 ... +200 (-292 ... +392)	0.004280 (0.002378)	100 (212)
	GOST 6651-94	-50 ... +200 (-58 ... +392)	0.004260 (0.002367)	100 (212)

TC

Input type	Standard	Measuring range in °C (°F)	Minimum measuring span in °C (°F)
B	IEC 60584-1	0 (85) ... 1 820 (32 (185) ... 3 308)	100 (212)
E	IEC 60584-1	-200 ... +1 000 (-392 ... +1 832)	50 (122)
J	IEC 60584-1	-100 ... +1 200 (-212 ... +2 192)	50 (122)
K	IEC 60584-1	-180 ... +1 372 (-356 ... +2 502)	50 (122)
L	DIN 43710	-200 ... +900 (-392 ... +1 652)	50 (122)
Lr	GOST 3044-84	-200 ... +800 (-392 ... +1 472)	50 (122)
N	IEC 60584-1	-180 ... +1 300 (-356 ... +2 372)	50 (122)
R	IEC 60584-1	-50 ... +1 760 (-122 ... +3 200)	100 (212)
S	IEC 60584-1	-50 ... +1 760 (-122 ... +3 200)	100 (212)
T	IEC 60584-1	-200 ... +400 (-392 ... +752)	50 (122)
U	DIN 43710	-200 ... +600 (-392 ... +1 112)	50 (122)
W3	ASTM E988-96	0 ... 2 300 (32 ... 4 172)	100 (212)
W5	ASTM E988-96	0 ... 2 300 (32 ... 4 172)	100 (212)
LR	GOST 3044-84	-200 ... +800 (-392 ... +1472)	50 (122)

Input accuracy

Basic values

Input type	Basic accuracy	Temperature coefficient[1)]
RTD		
Pt10	≤ ±0.8 °C (1.44 °F)	≤ ±0.020 °C/°C (°F/°F)
Pt20	≤ ±0.4 °C (0.72 °F)	≤ ±0.010 °C/°C (°F/°F)
Pt50	≤ ±0.16 °C (0.288 °F)	≤ ±0.004 °C/°C (°F/°F)
Pt100	≤ ±0.04 °C (0.072 °F)	≤ ±0.002 °C/°C (°F/°F)
Pt200	≤ ±0.08 °C (0.144 °F)	≤ ±0.002 °C/°C (°F/°F)
Pt500	$T_{max.}$ < 180 °C (356 °F) = ≤ ±0.08 °C (0.144 °F) $T_{max.}$ > 180 °C (356 °F) = ≤ ±0.16 °C (0.288 °F)	≤ ±0.002 °C/°C (°F/°F)
Pt1000	≤ ±0.08 °C (0.144 °F)	≤ ±0.002 °C/°C (°F/°F)
Pt2000	$T_{max.}$ < 300 °C (572 °F) = ≤ ±0.08 °C (0.144 °F) $T_{max.}$ > 300 °C (572 °F) = ≤ ±0.4 °C (0.72 °F)	≤ ±0.002 °C/°C (°F/°F)
Pt10000	≤ ±0.16 °C (0.288 °F)	≤ ±0.002 °C/°C (°F/°F)
Pt x	Largest tolerance of neighboring points	Largest temperature coefficient of neighboring points
Ni10	≤ ±1.6 °C (2.88 °F)	≤ ±0.020 °C/°C (°F/°F)
Ni20	≤ ±0.8 °C (1.44 °F)	≤ ±0.010 °C/°C (°F/°F)
Ni50	≤ ±0.32 °C (0.576 °F)	≤ ±0.004 °C/°C (°F/°F)
Ni100	≤ ±0.16 °C (0.288 °F)	≤ ±0.002 °C/°C (°F/°F)
Ni120	≤ ±0.16 °C (0.288 °F)	≤ ±0.002 °C/°C (°F/°F)
Ni200	≤ ±0.16 °C (0.288 °F)	≤ ±0.002 °C/°C (°F/°F)
Ni500	≤ ±0.16 °C (0.288 °F)	≤ ±0.002 °C/°C (°F/°F)
Ni1000	≤ ±0.16 °C (0.288 °F)	≤ ±0.002 °C/°C (°F/°F)

© Siemens 2020

SITRANS TH420 (HART, universal)

Input type	Basic accuracy	Temperature coefficient[1]
Ni2000	≤ ±0.16 °C (0.288 °F)	≤ ±0.002 °C/°C (°F/°F)
Ni10000	≤ ±0.32 °C (0.576 °F)	≤ ±0.002 °C/°C (°F/°F)
Ni x	Largest tolerance of neighboring points	Largest temperature coefficient of neighboring points
Cu5	≤ ±1.6 °C (2.88 °F)	≤ ±0.040 °C/°C (°F/°F)
Cu10	≤ ±0.8 °C (1.44 °F)	≤ ±0.020 °C/°C (°F/°F)
Cu20	≤ ±0.4 °C (0.72 °F)	≤ ±0.010 °C/°C (°F/°F)
Cu50	≤ ±0.16 °C (0.288 °F)	≤ ±0.004 °C/°C (°F/°F)
Cu100	≤ ±0.08 °C (0.144 °F)	≤ ±0.002 °C/°C (°F/°F)
Cu200	≤ ±0.08 °C (0.144 °F)	≤ ±0.002 °C/°C (°F/°F)
Cu500	≤ ±0.16 °C (0.288 °F)	≤ ±0.002 °C/°C (°F/°F)
Cu1000	≤ ±0.08 °C (0.144 °F)	≤ ±0.002 °C/°C (°F/°F)
Cu x	Largest tolerance of neighboring points	Largest temperature coefficient of neighboring points
Linear resistance		
0 ... 400 Ω	≤ ±40 mΩ	≤ ±2 mΩ/°C (1.11 mΩ/°F)
0 ... 100 kΩ	≤ ±4 Ω	≤ ±0.2 Ω/°C (0.11 Ω/°F)
Potentiometers		
0 ... 100%	< 0.05%	< ± 0.005%
Voltage input		
mV: -20 ... 100 mV	≤ ±5 µV	≤ ±0.2 µV/°C (0.11 µV/°F)
mV: -100 ... 1700 mV	≤ ±0.1 mV	≤ ±36 µV/°C (20 µV/°F)
mV: ± 800 mV	≤ ±0.1 mV	≤ ±32 µV/°C (17.8 µV/°F)
TC		
E	≤ ±0.2 °C (0.36 °F)	≤ ±0.025 °C/°C (°F/°F)
J	≤ ±0.25 °C (0.45 °F)	≤ ±0.025 °C/°C (°F/°F)
K	≤ ±0.25 °C (0.45 °F)	≤ ±0.025 °C/°C (°F/°F)
L	≤ ±0.35 °C (0.63 °F)	≤ ±0.025 °C/°C (°F/°F)
N	≤ ±0.4 °C (0.72 °F)	≤ ±0.025 °C/°C (°F/°F)
T	≤ ±0.25 °C (0.45 °F)	≤ ±0.025 °C/°C (°F/°F)
U	< 0 °C (32 °F) ≤ ±0.8 °C (1.44 °F) ≥ 0 °C (32 °F) ≤ ±0.4 °C (0.72 °F)	≤ ±0.025 °C/°C (°F/°F)
Lr	≤ ±0.2 °C (0.36 °F)	≤ ±0.1 °C/°C (°F/°F)
R	< 200 °C (392 °F) ≤ ±0.5 °C (0.9 °F) ≥ 200 °C (392 °F) ≤ ±1 °C (1.8 °F)	≤ ±0.1 °C/°C (°F/°F)
S	< 200 °C (392 °F) ≤ ±0.5 °C (0.9 °F) ≥ 200 °C (392 °F) ≤ ±1 °C (1.8 °F)	≤ ±0.1 °C/°C (°F/°F)
W3	≤ ±0.6 °C (1.08 °F)	≤ ±0.1 °C/°C (°F/°F)
W5	≤ ±0.4 °C (0.72 °F)	≤ ±0.1 °C/°C (°F/°F)
B[2]	≤ ±1 °C (1.8 °F)	≤ ±0.1 °C/°C (°F/°F)
B[3]	≤ ±3 °C (5.4 °F)	≤ ±0.1 °C/°C (°F/°F)
B[4]	≤ ±8 °C (14.4 °F)	≤ ±0.8 °C/°C (°F/°F)
B[5]	Not specified	Not specified
CJC (internal)	< ±0.5 °C (0.9 °F)	Included in basic accuracy
CJC (external)	≤ ±0.08 °C (0.144 °F)	≤ ±0.002 °C/°C (°F/°F)

1) Temperature coefficients correspond to the specified values or 0.002% of the input span, depending on which value is greater.
2) Accuracy of the specification range > 400 °C (752 °F)
3) Accuracy of the specification range > 160 °C (320 °F) < 400 °C (752 °F)
4) Accuracy of the specification range > 85 °C (185 °F) < 160 °C (320 °F)
5) Accuracy of the specification range < 85 °C (185 °F)

Output accuracy

Output type	Basic accuracy	Temperature coefficient
Average value measurement	Average of accuracy of input 1 and input 2	Average of temperature coefficient of input 1 and input 2
Differential measurement	Sum of accuracy of input 1 and input 2	Sum of temperature coefficient of input 1 and input 2
Analog output	≤ ±1.6 µA (0.01% of the full output span)	≤ ±0.48 µA/K (≤ ±0.003% of the full output span/K)

© Siemens 2020

Selection and ordering data

	Article No.	Order code
SITRANS TH420 ↗ **Head transmitter with 2 inputs**	**7NG041** ■ - ■■■■■ - 0 ■■■	■■■
↗ Click on the Article No. for the online configuration in the PIA Life Cycle Portal.		
Communication		
With HART	**0**	
Primary value output		
Input 1	**0**	
Input 1, input 2 as redundancy	**1**	
Input 2, input 1 as redundancy	**2**	
Average input 1 and input 2, both as redundancy	**3**	
Minimum input 1 and input 2, both as redundancy	**4**	
Maximum input 1 and input 2, both as redundancy	**5**	
Difference input 1 - input 2	**6**	
Difference input 2 - input 1	**7**	
Absolute difference	**8**	
Primary value output, customer-specific		
Minimum input 1 and input 2, without redundancy	**9**	**H 1 A**
Maximum input 1 and input 2, without redundancy	**9**	**H 1 B**
Average input 1 and input 2, without redundancy	**9**	**H 1 C**
Input 2	**9**	**H 1 D**
Input 1, type		
RTD		
• Pt100 (IEC), 3-wire	**B**	
• Pt100 (IEC), 4-wire	**C**	
• Pt1000 (IEC), 3-wire	**D**	
• Pt1000 (IEC), 4-wire	**E**	
TC		
• Type B	**F**	
• Type E	**G**	
• Type J	**H**	
• Type K	**J**	
• Type L	**K**	
• Type N	**L**	
• Type R	**N**	
• Type S	**P**	
• Type T	**Q**	
Potentiometer, 4-wire	**R**	
Input 1, type customer-specific		
Define customer-specific input configurations in V options	**Y**	

	Article No.	Order code
SITRANS TH420 **Head transmitter with 2 inputs**	**7NG041** ■ - ■■■■■ - 0 ■■■	■■■
Input 2, type		
Without input 2	**A**	
RTD		
• Pt100 (IEC), 3-wire	**B**	
• Pt100 (IEC), 4-wire	**C**	
• Pt1000 (IEC), 3-wire	**D**	
• Pt1000 (IEC), 4-wire	**E**	
TC		
• Type B	**F**	
• Type E	**G**	
• Type J	**H**	
• Type K	**J**	
• Type L	**K**	
• Type N	**L**	
• Type R	**N**	
• Type S	**P**	
• Type T	**Q**	
Potentiometer, 4-wire	**R**	
Input 2, type customer-specific		
Define customer-specific input configurations in W options	**Y**	
CJC configuration for TC		
Input 1: no CJC; input 2: No CJC	**0**	
Input 1: internal CJC; input 2: internal CJC	**1**	
Input 1: external CJC; input 2: external CJC; define type in option Jxx	**2**	
Input 1: external CJC; define type in option Jxx; input 2: internal CJC	**3**	
Input 1: internal CJC; input 2: external CJC; define type in option Jxx	**4**	
Input 1: Internal CJC; Input 2: No CJC	**5**	
Input 1: External CJC (define type in option Jxx); input 2: No CJC	**6**	
Materials not in contact with media		
Without	**0**	
Type of protection		
General safety (non-Ex); CE, RCM, FM, KCC, EAC	**A**	
Intrinsic safety (Ex i) / Non-incendive field wiring (NIFW) / Increased safety zone 2 (Ex ec) / Non incendive (NI) (ATEX, IECEx, EACEx, CSA, FM, NEPSI, Inmetro)	**N**	
Electrical connection/cable entry		
Without	**A**	
Local HMI		
Without display		**0**

© Siemens 2020

SITRANS TH420 (HART, universal)

Options	Order code
Append "**-Z**" to Article No., add order code and, if applicable, free text.	
Manufacturer declarations	
Quality inspection certificate, 5-point factory calibration (IEC 60770-2)	**C11**
Certificates for functional safety	
Functional safety SIL2/3 (IEC 61508)	**C20**
Device options	
PDF file with device settings	**D10**
Without labeling of the measuring range on the TAG plate	**D41**
Jumper plug set on device for write protection	**D81**
Jumper plug set on device for fault current > 21 mA (instead of < 3.6 mA) (only non-SIL)	**D82**
External CJC types	
Pt100, IEC 60751, 3-wire	**J02**
Pt100, IEC 60751, 4-wire	**J03**
Ni100, DIN 43760-87, 3-wire	**J05**
Ni100, DIN 43760-87, 4-wire	**J06**
Input 1: TC	
Type C W5	**V01**
Type D W3	**V02**
Type U	**V03**
Type Lr	**V04**
Input 1: Potentiometers	
Potentiometer, 5-wire	**V31**
Input 1: RTD	
Pt x (IEC), 3-wire, define RTD factor x in option Y21	**V61**
Pt x (IEC), 4-wire, define RTD factor x in option Y21	**V62**
Pt x (JIS C1604-81), 3-wire, define RTD factor x in option Y21	**V64**
Pt x (JIS C1604-81), 4-wire, define RTD factor x in option Y21	**V65**
Pt x (GOST 6651-2009), 3-wire, define RTD factor x in option Y21	**V67**
Pt x (GOST 6651-2009), 4-wire, define RTD factor x in option Y21	**V68**
Ni x (DIN 43760-87), 3-wire, define RTD factor x in option Y21	**V70**
Ni x (DIN 43760-87), 4-wire, define RTD factor x in option Y21	**V71**
Ni x (GOST 6651-2009), 3-wire, define RTD factor x in option Y21	**V73**
Ni x (GOST 6651-2009), 4-wire, define RTD factor x in option Y21	**V74**
Cu x (ECW-15), 3-wire, define RTD factor x in option Y21	**V76**
Cu x (ECW-15), 4-wire, define RTD factor x in option Y21	**V77**
Cu x (GOST 6651-94), 3-wire, define RTD factor x in option Y21	**V79**
Cu x (GOST 6651-94), 4-wire, define RTD factor x in option Y21	**V80**
Cu x (GOST 6651-2009), 3-wire, define RTD factor x in option Y21	**V82**
Cu x (GOST 6651-2009), 4-wire, define RTD factor x in option Y21	**V83**
Input 2: TC	
Type C W5	**W01**
Type D W3	**W02**
Type U	**W03**
Type Lr	**W04**

Options	Order code
Append "**-Z**" to Article No., add order code and, if applicable, free text.	
Device settings	
Measuring range setting temperature input: Start of scale value (max. 5 characters), full scale value (max. 5 characters), unit (°C, °F, °Ra, K)	**Y01**
Customer-specific programming in plain text (n-lines)	**Y09**
Input 1: RTD factor; e.g. factor "200" = Pt200, adhesive label	**Y21**
Long tag (device parameter, max. 32 characters), adhesive label	**Y15**
Measuring point description (device parameter, max. 32 characters), adhesive label	**Y16**
Input 1: RTD factor; e.g. factor "200" = Pt200, adhesive label	**Y21**

Accessories

	Article No.
Additional accessories for assembly, connection and transmitter configuration, see page 2/251.	
Modems	
Modem with USB interface	**7MF4997-1DB**
SIMATIC PDM parameterization software	See Catalog FI 01 section 8
Mounting rail adapter for head transmitter (Quantity delivered: 5 units)	**7NG3092-8KA**
Connecting cable 4-wire, 200 mm (7.87 inch), for input connections when using head transmitters in the high hinged cover (set with 5 units)	**7NG3092-8KC**

Ordering example

7NG0410-0BA00-0AA0-Z Y01

Y01: -10 ... +100 °C

Factory setting

- Input 1: Pt100 (IEC 751); 3-wire connection
- Input 2: not configured (inactive)
- Measuring range: 0 ... 100 °C (32 ... 212 °F)
- Fault current
  - Device error: < 3.6 mA
  - Input circuit wire break: 22.8 mA
  - Input circuit short circuit: 22.4 mA
  - Input circuit drift: 22 mA (active when input 2 is active)
  - Input monitoring wire break and short-circuit
- No trimming of input and output (offset)
- Damping 0.0 s

© Siemens 2020

Dimensional drawings

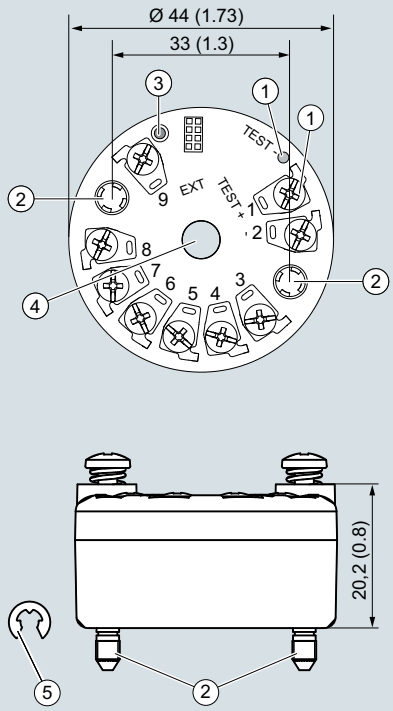

1 Test terminal
2 Mounting screw M4
3 LED
4 Internal diameter of center hole 6.3 (0.25)
5 Lock washer DIN 6799 - 3.2 A2

1(+) and 2(-)	Output terminals
3, 4, 5, 6, 7, 8 and 9	Input terminals

SITRANS TH420, dimensions and pin assignment, dimensions in mm (inch)

© Siemens 2020

Circuit diagrams

Connections

Input connection

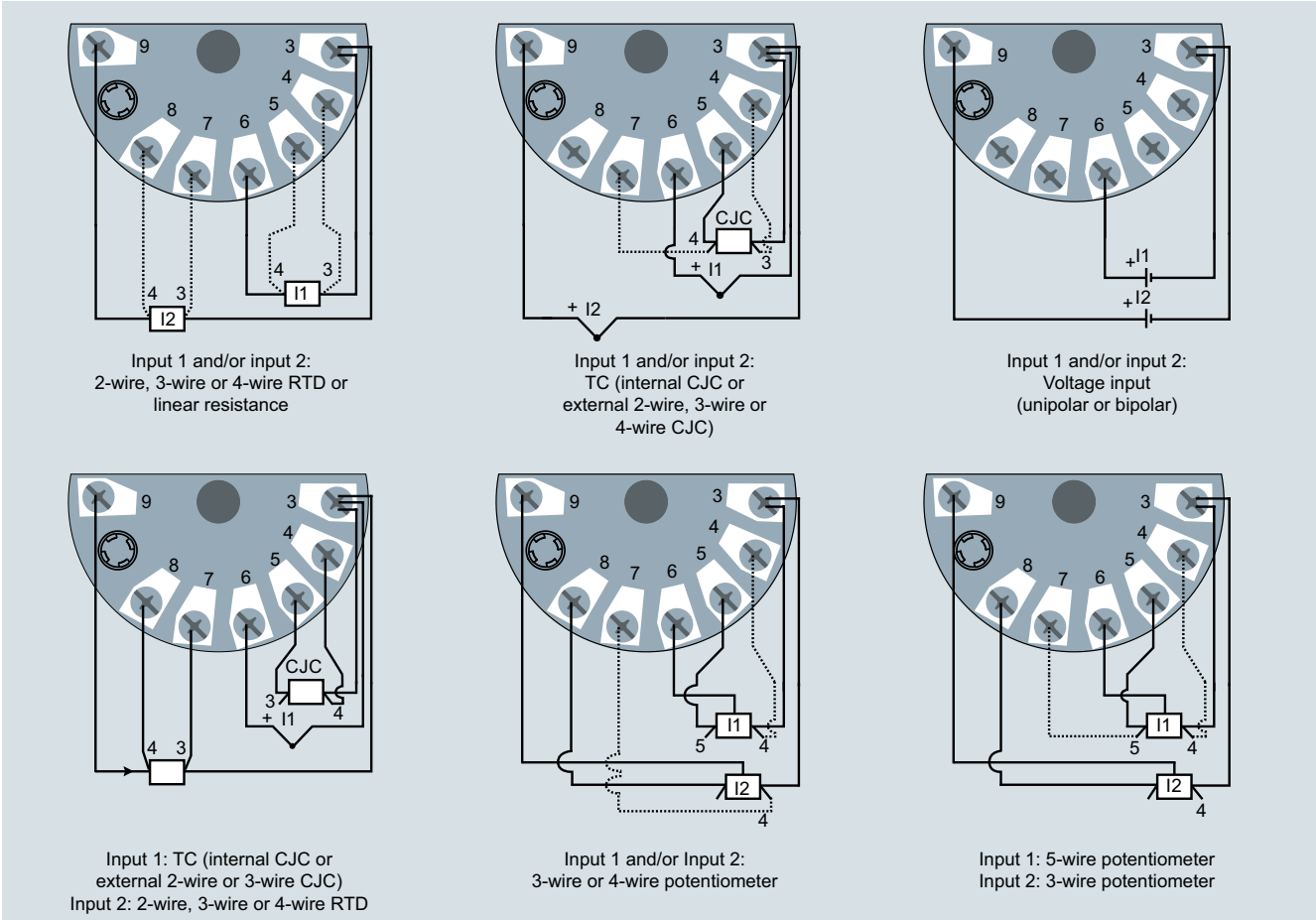

SITRANS TH420, input connection assignment

Output connection

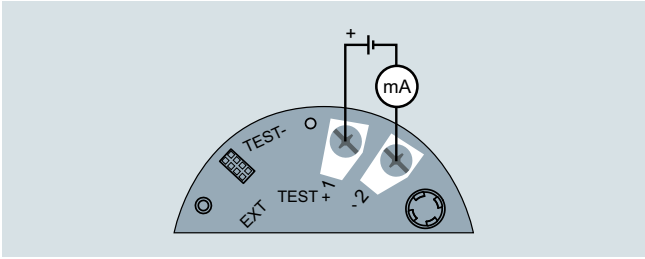

SITRANS TH420, output connection assignment

© Siemens 2020

Overview

Keep flexible - with the universal SITRANS TR200 transmitter

- 2-wire device for 4 to 20 mA
- Enclosure for rail mounting
- Universal input for virtually any type of temperature sensor
- Configurable over PC

Benefits

- Compact design
- Galvanic isolation
- Test sockets for multimeters
- Diagnostics LED (green/red)
- Sensor monitoring
  open circuits and short-circuits
- Self-monitoring
- Configuration status stored in EEPROM
- Expanded diagnostic functions, such as slave pointer, operating hours counter, etc.
- Special characteristic
- Electromagnetic compatibility to EN 61326 and NE21
- SIL2 (with order note C20), SIL2/3 (with C23)

Application

SITRANS TR200 transmitters can be used in all industrial sectors. Their compact design enables simple mounting on standard DIN rails on-site in protective boxes or in control cabinets. The following sensors/signal sources can be connected over their universal input module:

- Resistance thermometer (2, 3, 4-wire connection)
- Thermocouples
- Resistance-based sensors and DC voltage sources

The output signal is a direct current from 4 to 20 mA in accordance with the sensor characteristic.

Transmitters of the "intrinsically safe" type of protection can be installed within potentially explosive atmospheres. The devices meet the directive 2014/34/EU (ATEX).

Function

The SITRANS TR200 is configured over a PC. For this purpose, the USB or RS 232 modem is connected to the output terminals. The configuration data can now be edited using the SIPROM T software tool. The configuration data are then permanently stored in the non-volatile memory (EEPROM).

Once the sensors and power supply have been correctly connected, the transmitter outputs a temperature-linear output signal and the diagnostics LED displays a green light. In the case of a sensor break, the LED flashes red, an internal device fault is indicated by a steady red light.

The test socket can be used to connect an ammeter at any time for monitoring purposes and plausibility checks. The output current can be read without any interruption, or even without opening the current loop.

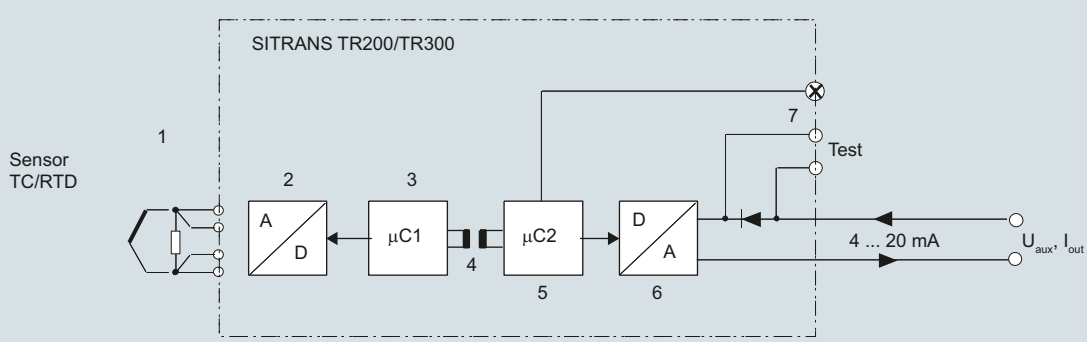

1 Sensor such as resistance thermometer, thermocouple, resistance-based, sensor, mV sensor
2 Analog-digital converter
3 Microcontroller, secondary circuit
4 Electrical isolation
5 Microcontroller, primary circuit
6 Digital-analog converter
7 LED

U_{aux} Auxiliary power supply
I_{out} Output current
Test Test terminals for temporary connection of an amperemeter

SITRANS TR200 function diagram

© Siemens 2020

Technical specifications

Input	
Resistance thermometer	
Measured variable	Temperature
Sensor type	
• According to IEC 60751	Pt25 … Pt1000
• Acc. to JIS C 1604; a=0.00392 K^{-1}	Pt25 … Pt1000
• According to IEC 60751	Ni25 … Ni1000
• Special type	Via special characteristic (max. 30 points)
Sensor factor	0.25 ... 10 (adaptation of the basic type, e.g. Pt100 to version Pt25 ... 1000)
Units	°C or °F
Connection	
• Standard connection	1 resistance thermometer (RTD) in 2-wire, 3-wire or 4-wire connection
• Averaging	2 resistance thermometers in 2-wire connection for generation of average temperature
• Differentiation	2 resistance thermometers (RTD) in 2-wire connection (RTD 1 – RTD 2 or RTD 2 – RTD 1)
Connection	
• 2-wire connection	Line resistance can be configured ≤100 Ω (loop resistance)
• 3-wire connection	No trim necessary
• 4-wire connection	No trim necessary
Sensor current	≤ 0.45 mA
Response time T_{63}	≤ 250 ms for 1 sensor with break monitoring
Break monitoring	Always active (cannot be switched off)
Short-circuit monitoring	Can be switched on/off (default value: ON)
Measuring range	Assignable (see "Digital measuring error" table)
Min. measuring span	10 °C (18 °F)
Characteristic curve	Temperature-linear or special characteristic
Resistance-based sensor	
Measured variable	Actual resistance
Sensor type	Resistance-based, potentiometers
Units	Ω
Connection	
• Standard connection	1 resistance-based sensor (R) in 2-wire, 3-wire or 4-wire connection
• Averaging	2 resistance-based sensors in 2-wire connection for averaging
• Differentiation	2 resistance thermometers in 2-wire connection (R1 – R2 or R2 – R1)
Connection	
• 2-wire connection	Line resistance can be configured ≤100 Ω (loop resistance)
• 3-wire connection	No trim necessary
• 4-wire connection	No trim necessary
Sensor current	≤ 0.45 mA
Response time T_{63}	≤ 250 ms for 1 sensor with break monitoring
Break monitoring	Always active (cannot be switched off)
Short-circuit monitoring	Can be switched on/off (default value: OFF)
Measuring range	Assignable max. 0 ... 2200 Ω (see "Digital measuring error" table)
Min. measuring span	5 ... 25 Ω (see "Digital measuring error" table)
Characteristic curve	Resistance-linear or special characteristic

Thermocouples	
Measured variable	Temperature
Sensor type (thermocouples)	
• Type B	Pt30Rh-Pt6Rh acc. to IEC 584
• Type C	W5%-Re acc. to ASTM 988
• Type D	W3%-Re acc. to ASTM 988
• Type E	NiCr-CuNi acc. to IEC 584
• Type J	Fe-CuNi acc. to IEC 584
• Type K	NiCr-Ni acc. to IEC 584
• Type L	Fe-CuNi acc. to DIN 43710
• Type N	NiCrSi-NiSi acc. to IEC 584
• Type R	Pt13Rh-Pt acc. to IEC 584
• Type S	Pt10Rh-Pt acc. to IEC 584
• Type T	Cu-CuNi acc. to IEC 584
• Type U	Cu-CuNi acc. to DIN 43710
Units	°C or °F
Connection	
• Standard connection	1 thermocouple (TC)
• Averaging	2 thermocouples (TC)
• Differentiation	2 thermocouples (TC) (TC1 – TC2 or TC2 – TC1)
Response time T_{63}	≤ 250 ms for 1 sensor with break monitoring
Break monitoring	Can be switched off
Reference junction compensation	
• Internal	With integrated Pt100 resistance thermometer
• External	With external Pt100 IEC 60751 (2-wire or 3-wire connection)
• External fixed	Reference junction temperature can be set as fixed value
Measuring range	Assignable (see "Digital measuring error" table)
Min. measuring span	Min. 40 ... 100 °C (72 ... 180 °F) (see "Digital measuring error" table)
Characteristic curve	Temperature-linear or special characteristic
mV sensor	
Measured variable	DC voltage
Sensor type	DC voltage source (DC voltage source possible over an externally connected resistor)
Units	mV
Response time T_{63}	≤ 250 ms for 1 sensor with break monitoring
Break monitoring	Can be switched off
Measuring range	Assignable max. -100 … 1100 mV
Min. measuring span	2 mV or 20 mV
Overload capability of the input	-1.5 ... +3.5 V DC
Input resistance	≥ 1 MΩ
Characteristic curve	Voltage-linear or special characteristic

© Siemens 2020

Output	
Output signal	4 ... 20 mA, 2-wire
Auxiliary power	11 ... 35 V DC (to 30 V with Ex i/ic; to 32 V with Ex nA)
Max. load	(U_{aux} – 11 V)/0.023 A
Overrange	3.6 ... 23 mA, infinitely adjustable (default range: 3.84 mA ... 20.5 mA)
Error signal (e.g. following sensor fault) (conforming to NE43)	3.6 ... 23 mA, infinitely adjustable (default value: 22.8 mA)
Sample cycle	0.25 s nominal
Damping	Software filter 1st order 0 ... 30 s (parameterizable)
Protection	Against reverse polarity
Galvanic isolation	Input against output 2.12 kV DC (1.5 kV_{rms} AC)
Measuring accuracy	
Digital measuring error	See "Digital measuring error" table
Reference conditions	
• Auxiliary power	24 V ± 1 %
• Load	500 Ω
• Ambient temperature	23 °C
• Warming-up time	> 5 min
Error in the analog output (digital/analog converter)	< 0.025 % of measuring span
Error due to internal reference junction	< 0.5 °C (0.9 °F)
Effect of ambient temperature	
• Analog measuring error	0.02 % of meas. span/10 °C (18 °F)
• Digital measuring error	
- With resistance thermometer	0.06 °C (0.11 °F)/10 °C (18 °F)
- With thermocouples	0.6 °C (1.1 °F)/10 °C (18 °F)
Auxiliary power effect	< 0.001 % of meas. span/V
Effect of load impedance	< 0.002 % of meas. span/100 Ω
Long-term drift	
• In the first month	< 0.02 % of measuring span
• After one year	< 0.2 % of measuring span
• After 5 years	< 0.3 % of measuring span
Rated conditions	
Ambient conditions	
Ambient temperature	-40 ... +85 °C (-40 ... +185 °F)
Storage temperature	-40 ... +85 °C (-40 ... +185 °F)
Relative humidity	< 98 %, with condensation
Electromagnetic compatibility	According to EN 61326 and NE21
Design	
Material	Plastic, electronic module potted
Weight	122 g
Dimensions	See "Dimensional drawings"
Cross-section of cables	Max. 2.5 mm^2 (AWG 13)
Degree of protection according to IEC 60529	
• Enclosure	IP20

Certificates and approvals	
Explosion protection ATEX	
EC type-examination certificate	PTB 07 ATEX 2032X
• "Intrinsic safety" type of protection	II 2(1) G Ex ia/ib IIC T6/T4 II 3(1) G Ex ia/ic IIC T6/T4 II 3 G Ex ic IIC T6/T4 II 2(1) D Ex iaD/ibD 20/21 T115 °C
• "Non-sparking equipment" type of protection	II 3 G Ex nA IIC T6/T4
Other certificates	NEPSI and EAC Ex
Software requirements for SIPROM T	
PC operating system	Windows ME, 2000, XP, Win 7 and Win 8; in connection with RS 232 modem, also Windows 95, 98 and 98SE

Factory setting:

- Pt100 (IEC 751); 3-wire connection
- Measuring range: 0 ... 100 °C (32 ... 212 °F)
- Fault current: 22.8 mA
- Sensor offset: 0 °C (0 °F)
- Damping 0.0 s

© Siemens 2020

Digital measuring error

Resistance thermometer

Input	Measuring range	Minimum measuring span		Digital accuracy	
	°C (°F)	°C	(°F)	°C	(°F)
According to IEC 60751					
Pt25	-200 ... +850 (-328 ... +1562)	10	(18)	0.3	(0.54)
Pt50	-200 ... +850 (-328 ... +1562)	10	(18)	0.15	(0.27)
Pt100 ... Pt200	-200 ... +850 (-328 ... +1562)	10	(18)	0.1	(0.18)
Pt500	-200 ... +850 (-328 ... +1562)	10	(18)	0.15	(0.27)
Pt1000	-200 ... +350 (-328 ... +662)	10	(18)	0.15	(0.27)
According to JIS C1604-81					
Pt25	-200 ... +649 (-328 ... +1200)	10	(18)	0.3	(0.54)
Pt50	-200 ... +649 (-328 ... +1200)	10	(18)	0.15	(0.27)
Pt100 ... Pt200	-200 ... +649 (-328 ... +1200)	10	(18)	0.1	(0.18)
Pt500	-200 ... +649 (-328 ... +1200)	10	(18)	0.15	(0.27)
Pt1000	-200 ... +350 (-328 ... +662)	10	(18)	0.15	(0.27)
Ni 25 ... Ni1000	-60 ... +250 (-76 ... +482)	10	(18)	0.1	(0.18)

Resistance-based sensor

Input	Measuring range	Minimum measuring span	Digital accuracy
	Ω	Ω	Ω
Resistance	0 ... 390	5	0.05
Resistance	0 ... 2200	25	0.25

Thermocouples

Input	Measuring range	Minimum measuring span		Digital accuracy	
	°C (°F)	°C	(°F)	°C	(°F)
Type B	100 ... 1820 (212 ... 3308)	100	(180)	2[1]	(3.6)[1]
Type C (W5)	0 ... 2300 (32 ... 4172)	100	(180)	2	(3.6)
Type D (W3)	0 ... 2300 (32 ... 4172)	100	(180)	1[2]	(1.8)[2]
Type E	-200 ... +1000 (-328 ... +1832)	50	(90)	1	(1.8)
Type J	-200 ... +1200 (-328 ... +2192)	50	(90)	1	(1.8)
Type K	-200 ... +1370 (-328 ... +2498)	50	(90)	1	(1.8)
Type L	-200 ... +900 (-328 ... +1652)	50	(90)	1	(1.8)
Type N	-200 ... +1300 (-328 ... +2372)	50	(90)	1	(1.8)
Type R	-50 ... +1760 (-58 ... +3200)	100	(180)	2	(3.6)
Type S	-50 ... +1760 (-58 ... +3200)	100	(180)	2	(3.6)
Type T	-200 ... +400 (-328 ... +752)	40	(72)	1	(1.8)
Type U	-200 ... +600 (-328 ... +1112)	50	(90)	2	(3.6)

[1] The digital accuracy in the range 100 to 300 °C (212 to 572 °F) is 3 °C (5.4 °F).

[2] The digital accuracy in the range 1750 to 2300 °C (3182 to 4172 °F) is 2 °C (3.6 °F).

mV sensor

Input	Measuring range	Minimum measuring span	Digital accuracy
	mV	mV	µV
mV sensor	-10 ... +70	2	40
mV sensor	-100 ... +1100	20	400

The digital accuracy is the accuracy after the analog/digital conversion including linearization and calculation of the measured value.

An additional error is generated in the output current 4 to 20 mA as a result of the digital/analog conversion of 0.025% of the set measuring span (digital-analog error).

The total error under reference conditions at the analog output is the sum from the digital error and the digital-analog error (poss. with the addition of reference junction errors in the case of thermocouple measurements).

© Siemens 2020

Selection and ordering data

	Article No.
SITRANS TR200 rail transmitter Installation on mounting rail 2-wire system, 4 to 20 mA, programmable, with galvanic isolation	
• Without explosion protection	**7NG3032-0JN00**
• With explosion protection according to ATEX	**7NG3032-1JN00**

Options	**Order code**
Append suffix "**-Z**" to article no., add order code and plain text, if applicable.	
With test report (5 measuring points)	**C11**
Functional safety SIL2	**C20**
Functional safety SIL2/3	**C23**
Customer-specific programming	
Measuring range to be set Specify in plain text (max. 5 digits): Y01:... to ... °C, °F	**Y01**[1)]
Measuring point number (TAG) max. 8 characters	**Y17**[2)]
Measuring point description, max. 16 characters	**Y23**[2)]
Measuring point message, max. 32 characters	**Y24**[2)]
Text on front plate, max. 16 characters	**Y29**[2)3)]
Pt100 (IEC) 2-wire, R_L = 0 W	**U02**[4)]
Pt100 (IEC) 3-wire	**U03**[4)]
Pt100 (IEC) 4-wire	**U04**[4)]
Type B thermocouple	**U20**[4)5)]
Type C thermocouple (W5)	**U21**[4)5)]
Type D thermocouple (W3)	**U22**[4)5)]
Type E thermocouple	**U23**[4)5)]
Type J thermocouple	**U24**[4)5)]
Type K thermocouple	**U25**[4)5)]
Type L thermocouple	**U26**[4)5)]
Type N thermocouple	**U27**[4)5)]
Type R thermocouple	**U28**[1)4)5)]
Type S thermocouple	**U29**[4)5)]
Type T thermocouple	**U30**[4)5)]
Type U thermocouple	**U31**[4)5)]
For TC: Cold junction compensation: external (Pt100, 3-wire)	**U41**
For TC: Reference junction compensation: external with fixed value: specify in plain text	**Y50**
Enter special deviating customer-specific setting in plain text	**Y09**[6)]
Fault current 3.6 mA (instead of 22.8 mA)	**U36**[2)]

1) For customer-specific programming for RTD and TC, the start value and the end value of the required measuring span must be specified here.
2) For this selection, Y01 or Y09 must also be selected.
3) Text on front plate is not saved in the device.
4) For this selection, Y01 must also be selected.
5) Internal reference junction compensation is selected as the default for TC.
6) For customer-specific programming for mV and ohm, the start value and the end value of the required measuring span and the unit must be entered here.

Accessories

	Article No.
Additional accessories for assembly, connection and transmitter configuration, see page 2/251.	
Modem Modem with USB interface and SIPROM T software	**7NG3092-8KN**

For supply units, see Catalog FI01 section "Supplementary components"

Ordering example 1:

7NG3032-0JN00-Z Y01+Y17+Y29+U03
Y01: -10 ... +100 °C
Y17: TICA123
Y29: TICA123

Ordering example 2:

7NG3032-0JN00-Z Y01+Y17+Y23+Y29+U25
Y01: -10 ... +100 °C
Y17: TICA123
Y23: TICA123HEAT
Y29: TICA123HEAT

Factory setting:

- Pt100 (IEC 751); 3-wire connection
- Measuring range: 0 … 100 °C (32 … 212 °F)
- Fault current: 22.8 mA
- Sensor offset: 0 °C (0 °F)
- Damping 0.0 s

© Siemens 2020

Dimensional drawings

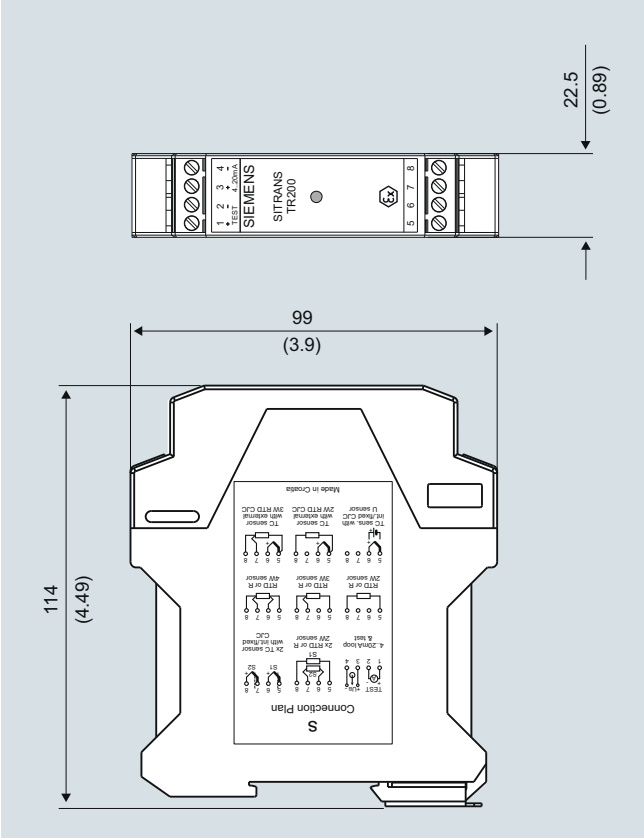

SITRANS TR200, dimensions in mm (inch)

Circuit diagrams

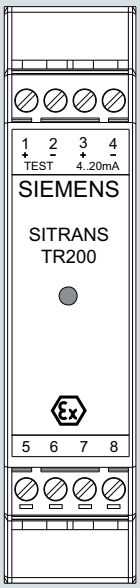

Connections

1 (+) and 2 (-)	Test terminals (test) for measurement of the output current with a multimeter
3 (+) and 4 (-)	Power supply U_{aux}, output current I_{out}
5, 6, 7 and 8	Sensor connection, see schematics

SITRANS TR200, connector assignment

© Siemens 2020

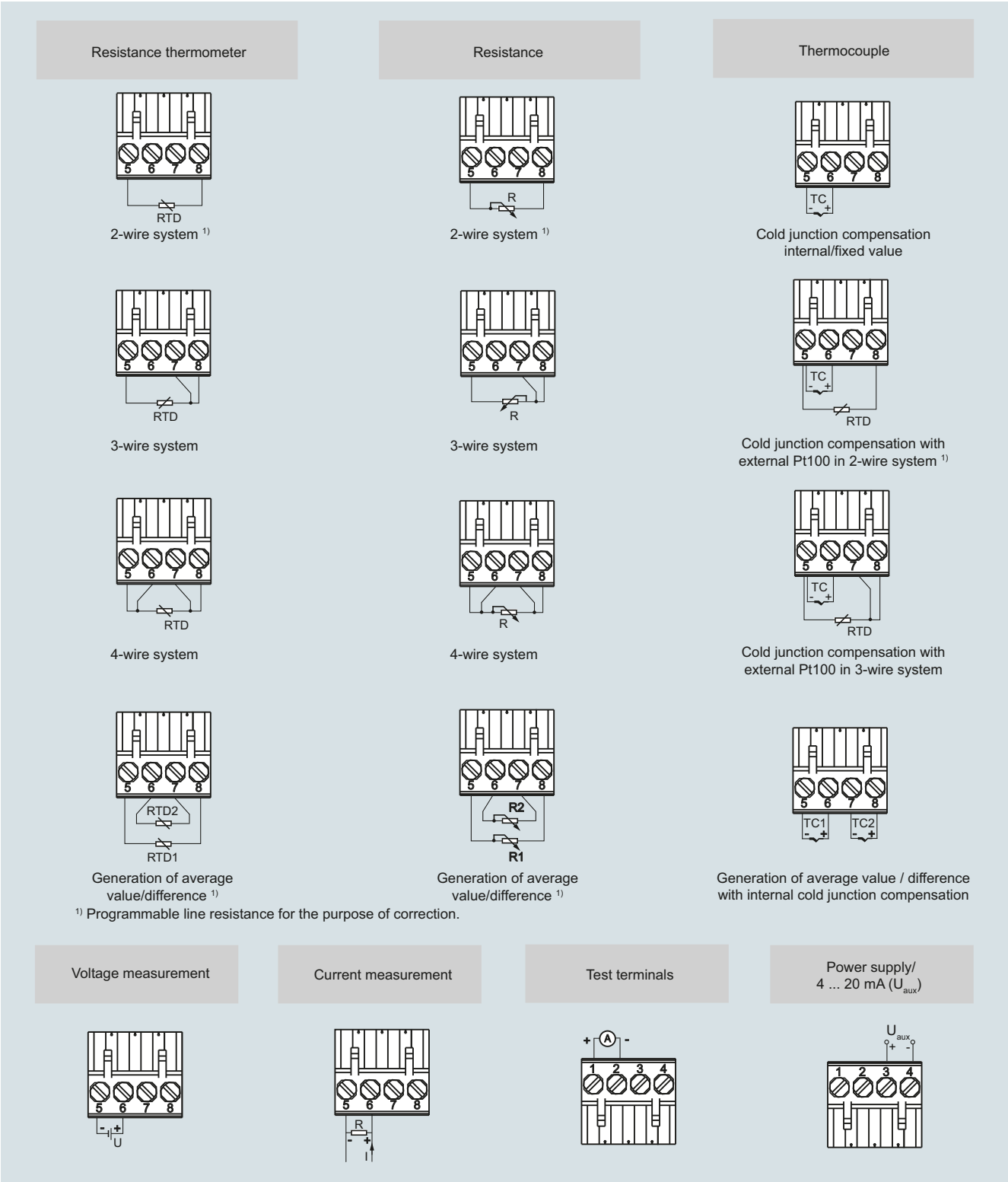

SITRANS TR200, sensor connection assignment

© Siemens 2020

SITRANS TR300 (4 to 20 mA, HART, universal)

Overview

Robust and durable HART - the universal SITRANS TR300 transmitter

- 2-wire device for 4 to 20 mA, HART
- Device for rail mounting
- Universal input for virtually any type of temperature sensor
- Configurable over HART

Benefits

- Compact design
- Galvanic isolation
- Test sockets for multimeters
- Diagnostics LED (green/red)
- Sensor monitoring
  open circuits and short-circuits
- Self-monitoring
- Configuration status stored in EEPROM
- Expanded diagnostic functions, such as slave pointer, operating hours counter, etc.
- Special characteristic
- Electromagnetic compatibility to EN 61326 and NE21
- SIL2 (with order note C20), SIL2/3 (with C23)

Application

SITRANS TR300 transmitters can be used in all industrial sectors. Their compact design enables simple mounting on standard DIN rails on-site in protective boxes or in control cabinets. The following sensors/signal sources can be connected over their universal input module:

- Resistance thermometer (2, 3, 4-wire connection)
- Thermocouples
- Resistance-based sensors and DC voltage sources

The output signal is a direct current from 4 to 20 mA in accordance with the sensor characteristic, superimposed by the digital HART signal.

Transmitters of the "intrinsically safe" type of protection can be installed within potentially explosive atmospheres. The devices meet the directive 2014/34/EU (ATEX).

Function

The SITRANS TR300 is configured over HART. This can be done using a handheld communicator or even more conveniently with a HART modem and the SIMATIC PDM parameterization software. The configuration data are then permanently stored in the non-volatile memory (EEPROM).

Once the sensors and power supply have been correctly connected, the transmitter outputs a temperature-linear output signal and the diagnostics LED displays a green light. In the case of a sensor break, the LED flashes red, an internal device fault is indicated by a steady red light.

The test socket can be used to connect an ammeter at any time for monitoring purposes and plausibility checks. The output current can be read without any interruption, or even without opening the current loop.

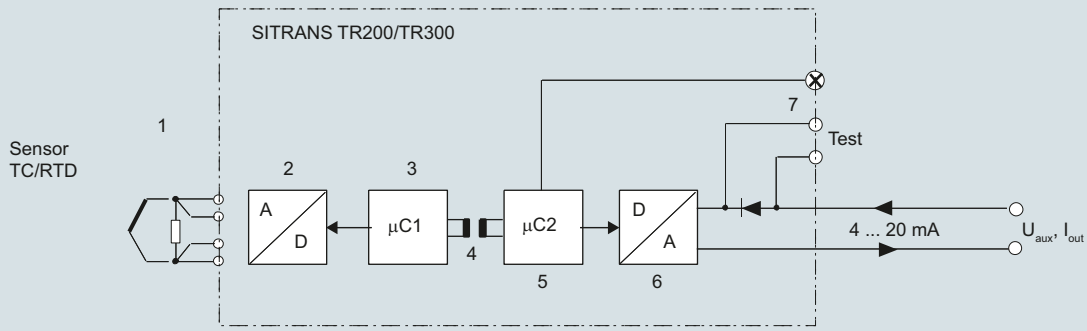

1 Sensor such as resistance thermometer, thermocouple, resistance-based, sensor, mV sensor
2 Analog-digital converter
3 Microcontroller, secondary circuit
4 Electrical isolation
5 Microcontroller, primary circuit
6 Digital-analog converter
7 LED

U_{aux} Auxiliary power supply
I_{out} Output current
Test Test terminals for temporary connection of an amperemeter

SITRANS TR300 function diagram

© Siemens 2020

Technical specifications

Input	
Resistance thermometer	
Measured variable	Temperature
Sensor type	
• According to IEC 60751	Pt25 … Pt1000
• Acc. to JIS C 1604; a=0.00392 K^{-1}	Pt25 … Pt1000
• According to IEC 60751	Ni25 … Ni1000
• Special type	Via special characteristic (max. 30 points)
Sensor factor	0.25 ... 10 (adaptation of the basic type, e.g. Pt100 to version Pt25 ... 1000)
Units	°C or °F
Connection	
• Standard connection	1 resistance thermometer (RTD) in 2-wire, 3-wire or 4-wire connection
• Averaging	2 identical resistance thermometers in 2-wire connection for generation of average temperature
• Differentiation	2 identical resistance thermometers (RTD) in 2-wire connection (RTD 1 – RTD 2 or RTD 2 – RTD 1)
Connection	
• 2-wire connection	Line resistance can be configured ≤100 Ω (loop resistance)
• 3-wire connection	No trim necessary
• 4-wire connection	No trim necessary
Sensor current	≤ 0.45 mA
Response time T_{63}	≤ 250 ms for 1 sensor with break monitoring
Break monitoring	Always active (cannot be switched off)
Short-circuit monitoring	Can be switched on/off (default value: ON)
Measuring range	Assignable (see "Digital measuring error" table)
Min. measuring span	10 °C (18 °F)
Characteristic curve	Temperature-linear or special characteristic
Resistance-based sensor	
Measured variable	Actual resistance
Sensor type	Resistance-based, potentiometers
Units	Ω
Connection	
• Standard connection	1 resistance-based sensor (R) in 2-wire, 3-wire or 4-wire connection
• Averaging	2 resistance-based sensors in 2-wire connection for averaging
• Differentiation	2 resistance thermometers in 2-wire connection (R1 – R2 or R2 – R1)
Connection	
• 2-wire connection	Line resistance can be configured ≤100 Ω (loop resistance)
• 3-wire connection	No trim necessary
• 4-wire connection	No trim necessary
Sensor current	≤ 0.45 mA
Response time T_{63}	≤ 250 ms for 1 sensor with break monitoring
Break monitoring	Always active (cannot be switched off)
Short-circuit monitoring	Can be switched on/off (default value: OFF)
Measuring range	Assignable max. 0 ... 2200 Ω (see "Digital measuring error" table)
Min. measuring span	5 ... 25 Ω (see "Digital measuring error" table)
Characteristic curve	Resistance-linear or special characteristic

Thermocouples	
Measured variable	Temperature
Sensor type (thermocouples)	
• Type B	Pt30Rh-Pt6Rh acc. to IEC 584
• Type C	W5%-Re acc. to ASTM 988
• Type D	W3%-Re acc. to ASTM 988
• Type E	NiCr-CuNi acc. to IEC 584
• Type J	Fe-CuNi acc. to IEC 584
• Type K	NiCr-Ni acc. to IEC 584
• Type L	Fe-CuNi acc. to DIN 43710
• Type N	NiCrSi-NiSi acc. to IEC 584
• Type R	Pt13Rh-Pt acc. to IEC 584
• Type S	Pt10Rh-Pt acc. to IEC 584
• Type T	Cu-CuNi acc. to IEC 584
• Type U	Cu-CuNi acc. to DIN 43710
Units	°C or °F
Connection	
• Standard connection	1 thermocouple (TC)
• Averaging	2 thermocouples (TC)
• Differentiation	2 thermocouples (TC) (TC1 – TC2 or TC2 – TC1)
Response time T_{63}	≤ 250 ms for 1 sensor with break monitoring
Break monitoring	Can be switched off
Reference junction compensation	
• Internal	With integrated Pt100 resistance thermometer
• External	With external Pt100 IEC 60751 (2-wire or 3-wire connection)
• External fixed	Reference junction temperature can be set as fixed value
Measuring range	Assignable (see "Digital measuring error" table)
Min. measuring span	Min. 40 ... 100 °C (72 ... 180 °F) (see "Digital measuring error" table)
Characteristic curve	Temperature-linear or special characteristic
mV sensor	
Measured variable	DC voltage
Sensor type	DC voltage source (DC voltage source possible over an externally connected resistor)
Units	mV
Response time T_{63}	≤ 250 ms for 1 sensor with break monitoring
Break monitoring	Can be switched off
Measuring range	Assignable max. -100 … 1100 mV
Min. measuring span	2 mV or 20 mV
Overload capability of the input	-1.5 ... +3.5 V DC
Input resistance	≥ 1 MΩ
Characteristic curve	Voltage-linear or special characteristic

© Siemens 2020

SITRANS TR300 (4 to 20 mA, HART, universal)

Output	
Output signal	4 ... 20 mA, 2-wire with communication acc. to HART Rev. 5.9
Auxiliary power	11 ... 35 V DC (to 30 V with Ex i/ic; to 32 V with Ex nA)
Max. load	(U_{aux} – 11 V)/0.023 A
Overrange	3.6 ... 23 mA, infinitely adjustable (default range: 3.84 mA ... 20.5 mA)
Error signal (e.g. following sensor fault) (conforming to NE43)	3.6 ... 23 mA, infinitely adjustable (default value: 22.8 mA)
Sample cycle	0.25 s nominal
Damping	Software filter 1st order 0 ... 30 s (parameterizable)
Protection	Against reverse polarity
Galvanic isolation	Input against output 2.12 kV DC (1.5 kV_{rms} AC)
Measuring accuracy	
Digital measuring error	See "Digital measuring error" table
Reference conditions	
• Auxiliary power	24 V ± 1 %
• Load	500 Ω
• Ambient temperature	23 °C
• Warming-up time	> 5 min
Error in the analog output (digital/analog converter)	< 0.025 % of measuring span
Error due to internal reference junction	< 0.5 °C (0.9 °F)
Effect of ambient temperature	
• Analog measuring error of measuring span	< 0.02% of max. meas. span/10 °C (18 °F)
• Digital measuring error	0.06 °C (0.11 °F)/10 °C (18 °F)
- With resistance thermometers	0.6 °C (1.1 °F)/10°C (18 °F)
- With thermocouples	
Auxiliary power effect	< 0.001 % of meas. span/V
Effect of load impedance	< 0.002 % of meas. span/100 Ω
Long-term drift	
• In the first month	< 0.02 % of measuring span
• After one year	< 0.2 % of measuring span
• After 5 years	< 0.3 % of measuring span
Rated conditions	
Ambient conditions	
Ambient temperature	-40 ... +85 °C (-40 ... +185 °F)
Storage temperature	-40 ... +85 °C (-40 ... +185 °F)
Relative humidity	< 98 %, with condensation
Electromagnetic compatibility	According to EN 61326 and NE21
Design	
Material	Plastic, electronic module potted
Weight	122 g
Dimensions	See "Dimensional drawings"
Cross-section of cables	Max. 2.5 mm^2 (AWG 13)
Degree of protection according to IEC 60529	
• Enclosure	IP20
Certificates and approvals	
Explosion protection ATEX	
EC type-examination certificate	PTB 07 ATEX 2032X
• "Intrinsic safety" type of protection	II 2(1) G Ex ia/ib IIC T6/T4 II 3(1) G Ex ia/ic IIC T6/T4 II 3 G Ex ic IIC T6/T4 II 2(1) D Ex iaD/ibD 20/21 T115 °C
• "Non-sparking equipment" type of protection	II 3 G Ex nA IIC T6/T4
Other certificates	EAC Ex(GOST) and NEPSI

Factory setting:

- Pt100 (IEC 751); 3-wire connection
- Measuring range: 0 ... 100 °C (32 ... 212 °F)
- Fault current: 22.8 mA
- Sensor offset: 0 °C (0 °F)
- Damping 0.0 s

© Siemens 2020

Digital measuring error

Resistance thermometer

Input	Measuring range	Minimum measuring span		Digital accuracy	
	°C (°F)	°C	(°F)	°C	(°F)
According to IEC 60751					
Pt25	-200 ... +850 (-328 ... +1562)	10	(18)	0.3	(0.54)
Pt50	-200 ... +850 (-328 ... +1562)	10	(18)	0.15	(0.27)
Pt100 ... Pt200	-200 ... +850 (-328 ... +1562)	10	(18)	0.1	(0.18)
Pt500	-200 ... +850 (-328 ... +1562)	10	(18)	0.15	(0.27)
Pt1000	-200 ... +350 (-328 ... +662)	10	(18)	0.15	(0.27)
According to JIS C1604-81					
Pt25	-200 ... +649 (-328 ... +1200)	10	(18)	0.3	(0.54)
Pt50	-200 ... +649 (-328 ... +1200)	10	(18)	0.15	(0.27)
Pt100 ... Pt200	-200 ... +649 (-328 ... +1200)	10	(18)	0.1	(0.18)
Pt500	-200 ... +649 (-328 ... +1200)	10	(18)	0.15	(0.27)
Pt1000	-200 ... +350 (-328 ... +662)	10	(18)	0.15	(0.27)
Ni 25 ... Ni1000	-60 ... +250 (-76 ... +482)	10	(18)	0.1	(0.18)

Resistance-based sensor

Input	Measuring range	Minimum measuring span	Digital accuracy
	Ω	Ω	Ω
Resistance	0 ... 390	5	0.05
Resistance	0 ... 2200	25	0.25

Thermocouples

Input	Measuring range	Minimum measuring span		Digital accuracy	
	°C (°F)	°C	(°F)	°C	(°F)
Type B	100 ... 1820 (212 ... 3308)	100	(180)	2[1]	(3.6)[1]
Type C (W5)	0 ... 2300 (32 ... 4172)	100	(180)	2	(3.6)
Type D (W3)	0 ... 2300 (32 ... 4172)	100	(180)	1[2]	(1.8)[2]
Type E	-200 ... +1000 (-328 ... +1832)	50	(90)	1	(1.8)
Type J	-200 ... +1200 (-328 ... +2192)	50	(90)	1	(1.8)
Type K	-200 ... +1370 (-328 ... +2498)	50	(90)	1	(1.8)
Type L	-200 ... +900 (-328 ... +1652)	50	(90)	1	(1.8)
Type N	-200 ... +1300 (-328 ... +2372)	50	(90)	1	(1.8)
Type R	-50 ... +1760 (-58 ... +3200)	100	(180)	2	(3.6)
Type S	-50 ... +1760 (-58 ... +3200)	100	(180)	2	(3.6)
Type T	-200 ... +400 (-328 ... +752)	40	(72)	1	(1.8)
Type U	-200 ... +600 (-328 ... +1112)	50	(90)	2	(3.6)

[1] The digital accuracy in the range 100 to 300 °C (212 to 572 °F) is 3 °C (5.4 °F).

[2] The digital accuracy in the range 1750 to 2300 °C (3182 to 4172 °F) is 2 °C (3.6 °F).

mV sensor

Input	Measuring range	Minimum measuring span	Digital accuracy
	mV	mV	µV
mV sensor	-10 ... +70	2	40
mV sensor	-100 ... +1100	20	400

The digital accuracy is the accuracy after the analog/digital conversion including linearization and calculation of the measured value.

An additional error is generated in the output current 4 to 20 mA as a result of the digital/analog conversion of 0.025% of the set measuring span (digital-analog error).

The total error under reference conditions at the analog output is the sum from the digital error and the digital-analog error (poss. with the addition of reference junction errors in the case of thermocouple measurements).

© Siemens 2020

Selection and ordering data

	Article No.
SITRANS TR300 rail transmitter Installation on mounting rail 2-wire system, 4 … 20 mA, HART, with galvanic isolation	
• Without explosion protection	**7NG3033-0JN00**
• With explosion protection according to ATEX	**7NG3033-1JN00**

Options	Order code
Append suffix "**-Z**" to article no., add order code and plain text, if applicable.	
With test report (5 measuring points)	**C11**
Functional safety SIL2	**C20**
Functional safety SIL2/3	**C23**
Customer-specific programming	
Measuring range to be set Specify in plain text (max. 5 digits): Y01:... to ... °C, °F	**Y01**[1)]
Measuring point number (TAG) max. 8 characters	**Y17**[2)]
Measuring point description, max. 16 characters	**Y23**[2)]
Measuring point message, max. 32 characters	**Y24**[2)]
Text on front plate, max. 16 characters	**Y29**[2)3)]
Pt100 (IEC) 2-wire, R_L = 0 Ω	**U02**[4)]
Pt100 (IEC) 3-wire	**U03**[4)]
Pt100 (IEC) 4-wire	**U04**[4)]
Type B thermocouple	**U20**[4)5)]
Type C thermocouple (W5)	**U21**[4)5)]
Type D thermocouple (W3)	**U22**[4)5)]
Type E thermocouple	**U23**[4)5)]
Type J thermocouple	**U24**[4)5)]
Type K thermocouple	**U25**[4)5)]
Type L thermocouple	**U26**[4)5)]
Type N thermocouple	**U27**[4)5)]
Type R thermocouple	**U28**[4)5)]
Type S thermocouple	**U29**[4)5)]
Type T thermocouple	**U30**[4)5)]
Type U thermocouple	**U31**[4)5)]
For TC: Cold junction compensation: external (Pt100, 3-wire)	**U41**
For TC: Cold junction compensation: external with fixed value: specify in plain text	**Y50**
Enter special deviating customer-specific setting in plain text	**Y09**[6)]
Fault current 3.6 mA (instead of 22.8 mA)	**U36**[2)]

1) For customer-specific programming for RTD and TC, the start value and the end value of the required measuring span must be specified here.
2) For this selection, Y01 or Y09 must also be selected.
3) Text on front plate is not saved in the device.
4) For this selection, Y01 must also be selected.
5) Internal reference junction compensation is selected as the default for TC.
6) For customer-specific programming for mV and ohm, the start value and the end value of the required measuring span and the unit must be entered here.

Accessories

	Article No.
Additional accessories for assembly, connection and transmitter configuration, see page 2/251.	
Modem	
Modem with USB interface	**7MF4997-1DB**
SIMATIC PDM operating software	**See section 8**

For supply units, see Catalog FI01 section "Supplementary components"

Ordering example 1:

7NG3033-0JN00-Z Y01+Y17+Y29+U03
Y01: -10 ... +100 °C
Y17: TICA123
Y29: TICA123

Ordering example 2:

7NG3033-0JN00-Z Y01+Y17+Y23+Y29+U25
Y01: -10 ... +100 °C
Y17: TICA123
Y23: TICA123HEAT
Y29: TICA123HEAT

Factory setting:

- Pt100 (IEC 751); 3-wire connection
- Measuring range: 0 ... 100 °C (32 ... 212 °F)
- Fault current in the event of sensor breakage: 22.8 mA
- Sensor offset: 0 °C (0 °F)
- Damping 0.0 s

© Siemens 2020

Dimensional drawings

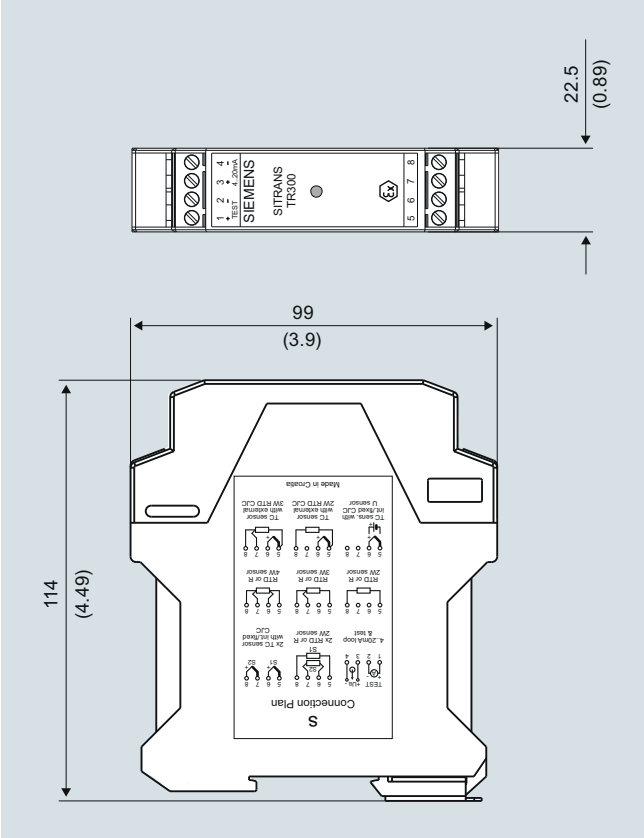

SITRANS TR300, dimensions in mm (inch)

Circuit diagrams

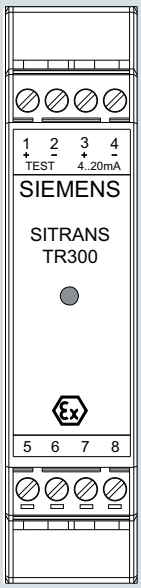

Connections

1 (+) and 2 (-)	Test terminals (Test) for measurement of the output current with a multimeter
3 (+) and 4 (-)	Power supply U_{aux}, Output current I_{out}
5, 6, 7 and 8	Sensor connection, see schematics

SITRANS TR300, connector assignment

© Siemens 2020

SITRANS TR300 (4 to 20 mA, HART, universal)

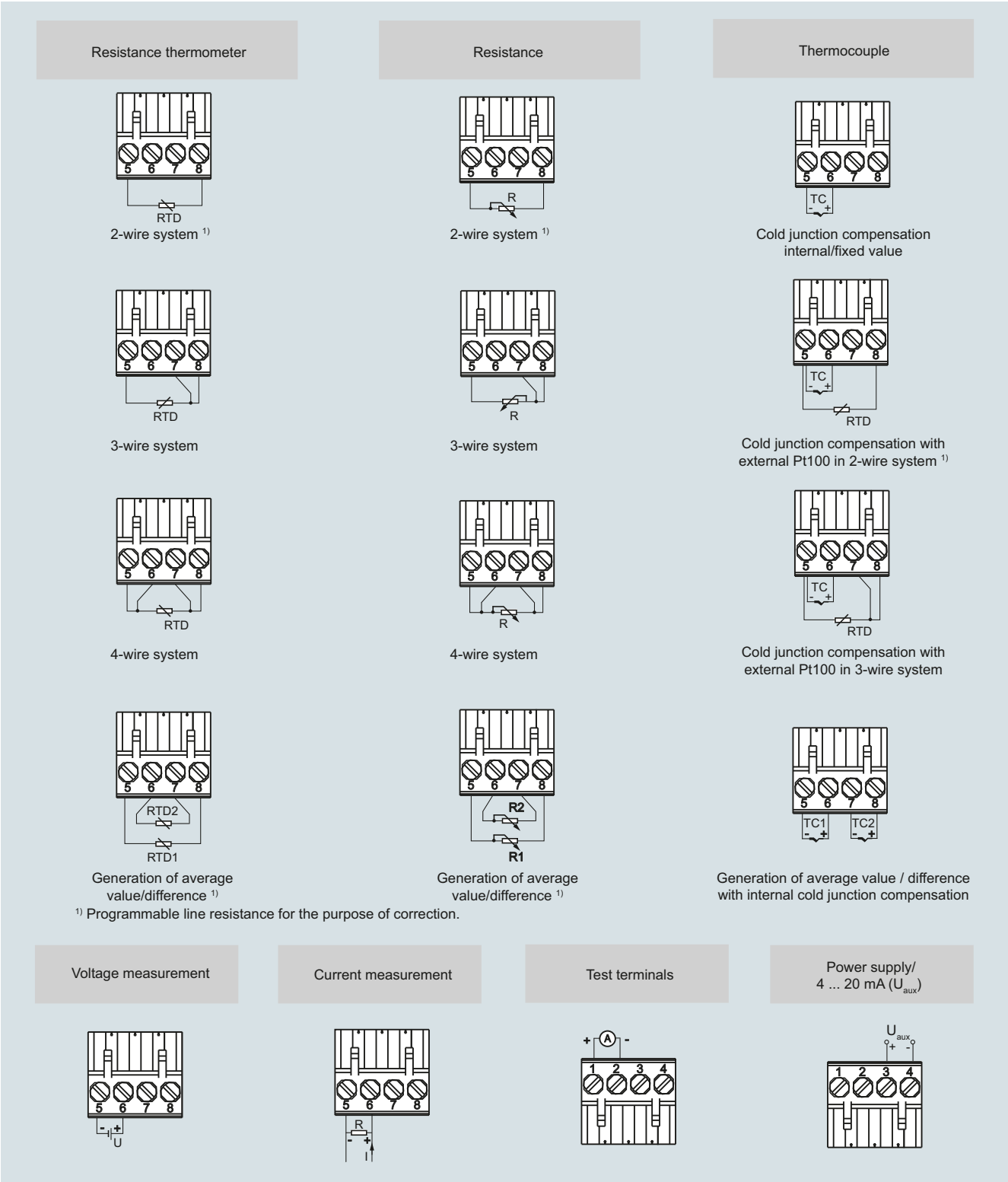

SITRANS TR300, sensor connection assignment

© Siemens 2020

Overview

- 2-wire rail transmitter with and without HART communications interface
- Enclosure for rail mounting
- Universal input for virtually any type of temperature sensor
- Can be configured via PC, HART 7 or optional local operation

Benefits

- Compact design
- Galvanic isolation
- Test terminals for ammeter
- Diagnostics LED (green/red)
- Input monitoring
  Wire break and short-circuit
- Self-monitoring
- Configuration status stored in EEPROM
- Expanded diagnostic functions, such as slave pointer, operating hours counter, etc.
- Special characteristic
- Electromagnetic compatibility according to DIN EN 61326 and NE21
- SIL2/3 (with order note C20)

Application

SITRANS TR320 transmitters can be used in all sectors. Their compact design enables simple mounting on standard DIN rails on-site in protective boxes or in control cabinets. The following sensors/signal sources can be connected over their universal input module:

- Resistance thermometer (2-wire, 3-wire, 4-wire connection)
- Thermocouples
- Linear resistance, potentiometer and DC voltage sources

With HART communication interface:

- The output signal is a load-independent direct current from 4 to 20 mA in accordance with the input characteristic, superimposed by the digital HART signal.

Transmitters of the "intrinsically safe or Zone 2 increased safety" type of protection can be installed in hazardous areas. The device meets the requirements of the EU Directive 2014/34/EU (ATEX), the FM and CSA regulations as well as other national approvals.

© Siemens 2020

Function

Without HART communications interface

For the SITRANS TR320 without HART functionality, parameters are assigned with the PC. Available for this purpose are a special modem and the software tool SIPROM T.

With HART communications interface

- The SITRANS TR320 is configured via HART. The configuration can be carried out using a handheld communicator or, more conveniently, with a HART modem and the SIMATIC PDM configuration software. The configuration data are then permanently stored in the non-volatile memory (EEPROM).

After correct connection of input and supply voltage, the transmitter outputs a temperature-linear output signal and the diagnostics LED is green. In case of external errors, e.g. sensor short circuit or interruption, the LED flashes red; an internal error is indicated by a permanent red light.

An ammeter can be connected at any time for checking and plausibility via the test terminals. The output current can be read without any interruption, or even without opening the current loop.

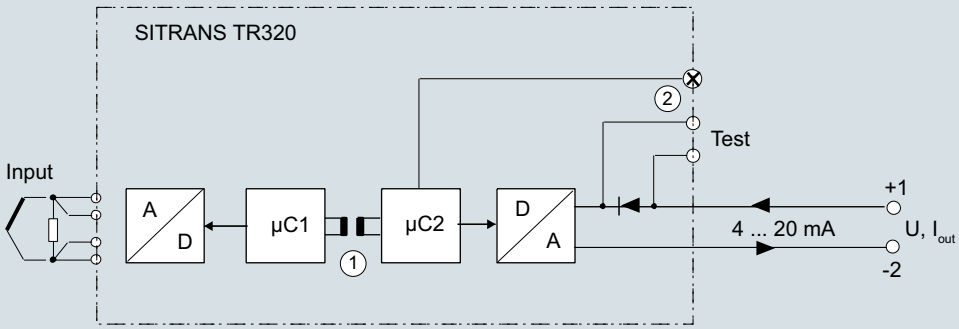

Input		Output	
A/D	Analog-digital converter	µC2	Microcontroller, primary circuit
µC1	Microcontroller, secondary circuit	D/A	Digital-analog converter
		U	Supply Voltage
		I_{out}	Output current
1	Galvanic isolation	2	LED

SITRANS TR320 function block diagram

© Siemens 2020

Technical specifications

General	
Supply voltage[1) 2)]	
• Without explosion protection (non-Ex)	7.5 ... 48 V DC
• with explosion protection (Ex i)	7.5 ... 30 V DC
Additional minimum supply voltage when using test terminals	0.8 V
Maximum power loss	≤ 850 mW
Minimum load resistance at supply voltage > 37 V	(V_{supply} - 37 V)/23 mA
Insulation voltage, test/operation	
• Without explosion protection (non-Ex)	2.5 kV AC/55 V AC
• with explosion protection (Ex i)	2.5 kV AC/42 V AC
Polarity protection	All inputs and outputs
Write protection	Open circuits or software
Warming-up time	< 5 min
Starting time	< 2.75 s
Programming	HART
Signal-to-noise ratio	> 60 dB
Long-term stability	Better than: • ± 0.05% of measuring span/year • ± 0.18% of measuring span/5 years
Response time	4 ... 20 mA: ≤ 55 ms HART: ≤ 75 ms (typically 70 ms)
Programmable damping	0 ... 60 s
Signal dynamic	
• Input	24 bit
• Output	18 bit
Influence of change in supply voltage	< 0.005% of measuring span/V DC
Input	
Resistance thermometer (RTD)	
Input type	
• Pt10 ... 10000	• IEC 60751 • JIS C 1604-8 • GOST 6651_2009 • Callendar-Van Dusen
• Ni10 ... 10000	• DIN 43760-1987 • GOST 6651-2009/OIML R84:2003
• Cu5 ... 1000	• Edison Copper Winding No. 15 • GOST 6651-2009/OIML R84:2003
Type of connection	2-wire, 3-wire or 4-wire
Line resistance per wire	Max. 50 Ω
Input current	< 0.15 mA
Effect of the line resistance (with 3-wire and 4-wire connections)	< 0.002 Ω/Ω
Cable, wire-wire capacity	
• Pt1000, Pt10000 (IEC 60751 and JIS C 1604-8)	Max. 30 nF
• All other input types	Max. 50 nF
Fault detection, programmable	None, short-circuited, defective, short-circuited or defective **Note** When the low limit for the configured input type is below the constant detection limit for short-circuited inputs, the detection of short circuits is disabled regardless of the configuration of the fault detection.
Detection limit for short-circuited input	15 Ω
Fault detection time (RTD)	≤ 75 ms (typically 70 ms)
Fault detection time (for 3-wire and 4-wire)	≤ 2 000 ms

Thermocouples (TC)	
Input type	
• B	IEC 60584-1
• E	IEC 60584-1
• J	IEC 60584-1
• K	IEC 60584-1
• L	DIN 43710
• Lr	GOST 3044-84
• N	IEC 60584-1
• R	IEC 60584-1
• S	IEC 60584-1
• T	IEC 60584-1
• U	DIN 43710
• W3	ASTM E988-96
• W5	ASTM E988-96
• LR	GOST 3044-84
Cold junction compensation (CJC)	Constant, internal or external over Pt100 or Ni100 RTD
• Temperature range internal CJC	-50 ... +100 °C (-58 ... +212 °F)
• Connection external CJC	2-wire or 3-wire
• External CJC, line resistance per wire (for 3-wire and 4-wire connections)	50 Ω
• Effect of the line resistance (with 3-wire and 4-wire connections)	< 0.002 Ω/Ω
• Input current external CJC	< 0.15 mA
• Temperature range external CJC	-50 ... +135 °C (-58 ... +275 °F)
• Cable, wire-wire capacity	Max. 50 nF
• Total line resistance	Max. 10 kΩ
• Fault detection, programmable	None, short-circuited, defective, short-circuited or defective **Note** The short-circuited fault detection only applies to the CJC input.
• Fault detection time (TC)	≤ 75 ms (typically 70 ms)
• Fault detection time, external CJC (for 3-wire and 4-wire)	≤ 2 000 ms
Linear resistance	
Input range	0 ... 100 kΩ
Minimum measuring span	25 Ω
Type of connection	2-wire, 3-wire or 4-wire
Line resistance per wire	Max. 50 Ω
Input current	< 0.15 mA
Effect of the line resistance (with 3-wire and 4-wire connections)	< 0.002 Ω/Ω
Cable, wire-wire capacity	
• R > 400 Ω	Max. 30 nF
• R ≤ 400 Ω	Max. 50 nF
Fault detection, programmable	None, defective
Potentiometers	
Input range	10 ... 100 kΩ
Minimum measuring span	25 Ω
Type of connection	3-wire or 4-wire
Line resistance per wire	Max. 50 Ω
Input current	< 0.15 mA
Effect of the line resistance (with 4-wire and 5-wire connections)	< 0.002 Ω/Ω
Cable, wire-wire capacity	
• R > 400 Ω	Max. 30 nF
• R ≤ 400 Ω	Max. 50 nF

© Siemens 2020

Fault detection, programmable	None, short-circuited, defective, short-circuited or defective **Note** When the configured potentiometer size is below the constant detection limit for short-circuited inputs, the detection of short circuits is disabled regardless of the configuration of the fault detection.
Detection limit for short-circuited input	15 Ω
Fault detection time, wiper arm (no short-circuit detection)	≤ 75 ms (typically 70 ms)
Fault detection time, element	≤ 2 000 ms
Fault detection time (for 4-wire and 5-wire)	≤ 2 000 ms
Voltage input	
Measuring range	
• Unipolar	-100 ... 1700 mV
• Bipolar	-800 ... +800 mV
Minimum measuring span	2.5 mV
Input resistance	10 MΩ
Cable, wire-wire capacity	
• Input range: -100 ... 1700 mV	Max. 30 nF
• Input range: -20 ... 100 mV	Max. 50 nF
Fault detection, programmable	None, defective
Fault detection time	≤ 75 ms (typically 70 ms)
Output and HART communication	
Normal range, programmable	3.8 ... 20.5 mA/20.5 ... 3.8 mA
Extended range (output limits), programmable	3.5 ... 23 mA/23 ... 3.5 mA
Programmable input/output limits	
• Fault current	Enable/disable
• Fault current setting	3.5 ... 23 mA
Update time	10 ms
Load (with current output)	≤ (V_{Supply} - 7.5)/0.023 Ω
Load stability	< 0.01% of meas. span/100 Ω (measuring span = currently selected range)
Input fault detection, programmable (detection of input short circuits is ignored with TC and voltage inputs)	3.5 ... 23 mA
NAMUR NE43 Upscale	> 21 mA
NAMUR NE43 Downscale	< 3.6 mA
HART protocol versions	HART 7
Measuring accuracy	
Input accuracy	See "Input accuracy" table
Output accuracy	See "Output accuracy" table
Rated conditions	
Ambient temperature	-50 ... +85 °C (-58 ... +185 °F)
Ambient temperature for devices with functional safety	-40 ... +80 °C (-40 ... +176 °F)
Storage temperature	-50 ... +85 °C (-58 ... +185 °F)
Reference temperature for sensor calibration	24 °C ±1.0 °C (75.2 °F ±1.8 °F)
Relative humidity	< 99% (no condensation)
Degree of protection	
• Transmitter enclosure	IP20
• Terminals	IP20

Design	
Weight	122 g (0.27 lb)
Maximum core cross-section	2.5 mm² (AWG 13)
Tightening torque for clamping screws	0.5 ... 0.6 Nm
Vibrations	IEC 60068-2-6
• 2 ... 25 Hz	± 1.6 mm (0.07 inch)
• 25 ... 100 Hz	± 4 g
Certificates and approvals	
Explosion protection ATEX/IECEx and others	
Certificates[3]	DEKRA 17ATEX0116 X IECEx DEK 17.0054X A5E43700604A-2018X
"Intrinsic safety ia/ib" type of protection	For use in Zone 0, 1, 2, 20, 21, 22
• ATEX	II 1 G Ex ia IIC T6 ... T4 Ga II 2(1) G Ex ib [ia Ga] IIC T6 ... T4 Gb II 1 D Ex ia IIIC Da I M1 Ex ia I Ma
• IECEx and others	Ex ia IIC T6 ... T4 Ga Ex ib [ia Ga] IIC T6 ... T4 Gb Ex ia IIIC Da Ex ia I Ma
"Intrinsic safety ic" type of protection	For use in Zones 2 and 22
• ATEX	II 2 G Ex ic IIC T6…T4 Gc II 2 D Ex ic IIIC Dc
• IECEx and others	Ex ic IIC T6 ... T4 Gc Ex ic IIIC Dc
"Non-sparking/increased safety nA/ec" type of protection	For use in Zones 2 and 22
• ATEX	II 2 G Ex nA IIC T6…T4 Gc II 2 G Ex ec IIC T6…T4 Gc
• IECEx and others	Ex nA IIC T6 ... T4 Gc Ex ec IIC T6 ... T4 Gc
Explosion protection CSA/FM for Canada and USA	
Certificates	CSA 1861385 FM18CA0024 FM18US0046
"Intrinsic safety ia" type of protection	IS, CL I, Div 1, GP ABCD, T6 ... T4 Ex ia IIC T6 … T4 Ga AEx ia IIC T6 … T4 Ga or: Ex ib [ia Ga] IIC T6…T4 Gb AEx ib [ia Ga] IIC T6…T4 Gb
"Non incendive field wiring NIFW" type of protection	NIFW, CL I, Div 2, GP ABCD T6 ... T4
"Non incendive NI" type of protection	NI, CL I, Div 2, GP ABCD T6...T4 Ex nA IIC T6 ... T4 Gc AEx nA IIC T6 ... T4 Gc

[1] Note that the minimum supply voltage must correspond to the value measured at the terminals of the SITRANS TR320.
All external voltage drops must be taken into consideration.

[2] Protect the device from overvoltage with the help of a suitable power supply or suitable overvoltage protection equipment.

[3] Additional available certificates are listed on the Internet at http://www.siemens.com/processinstrumentation/certificates

© Siemens 2020

Measuring ranges/Minimum measuring span

RTD

Input type	Standard	Measuring range in °C (°F)	α_0 in °C^{-1} (°F^{-1})	Minimum measuring span in °C (°F)
Pt10 ... 10000	IEC 60751	-200 ... +850 (-328 ... +1 562)	0.003851 (0.002139)	10 (50)
	JIS C 1604-8	-200 ... +649 (-328 ... +1 200)	0.003916 (0.002176)	10 (50)
	GOST 6651_2009	-200 ... +850 (-328 ... +1 562)	0.003910 (0.002172)	10 (50)
	Callendar-Van Dusen	-200 ... +850 (-328 ... +1 562)	-	10 (50)
Ni10 ... 10000	DIN 43760-1987	-60 ... +250 (-76 ... +482)	0.006180 (0.003433)	10 (50)
	GOST 6651-2009/OIML R84:2003	-60 ... +180 (-76 ... +356)	0.006170 (0.003428)	10 (50)
Cu5 ... 1000	Edison Copper Winding No. 15	-200 ... +260 (-328 ... +500)	0.004270 (0.002372)	100 (212)
	GOST 6651-2009/OIML R84:2003	-180 ... +200 (-292 ... +392)	0.004280 (0.002378)	100 (212)
	GOST 6651-94	-50 ... +200 (-58 ... +392)	0.004260 (0.002367)	100 (212)

TC

Input type	Standard	Measuring range in °C (°F)	Minimum measuring span in °C (°F)
B	IEC 60584-1	0 (85) ... 1 820 (32 (185) ... 3 308)	100 (212)
E	IEC 60584-1	-200 ... +1 000 (-392 ... +1 832)	50 (122)
J	IEC 60584-1	-100 ... +1 200 (-212 ... +2 192)	50 (122)
K	IEC 60584-1	-180 ... +1 372 (-356 ... +2 502)	50 (122)
L	DIN 43710	-200 ... +900 (-392 ... +1 652)	50 (122)
Lr	GOST 3044-84	-200 ... +800 (-392 ... +1 472)	50 (122)
N	IEC 60584-1	-180 ... +1 300 (-356 ... +2 372)	50 (122)
R	IEC 60584-1	-50 ... +1 760 (-122 ... +3 200)	100 (212)
S	IEC 60584-1	-50 ... +1 760 (-122 ... +3 200)	100 (212)
T	IEC 60584-1	-200 ... +400 (-392 ... +752)	50 (122)
U	DIN 43710	-200 ... +600 (-392 ... +1 112)	50 (122)
W3	ASTM E988-96	0 ... 2 300 (32 ... 4 172)	100 (212)
W5	ASTM E988-96	0 ... 2 300 (32 ... 4 172)	100 (212)
LR	GOST 3044-84	-200 ... +800 (-392 ... +1472)	50 (122)

Input accuracy

Basic values

Input type	Basic accuracy	Temperature coefficient[1)]
RTD		
Pt10	≤ ±0.8 °C (1.44 °F)	≤ ±0.020 °C/°C (°F/°F)
Pt20	≤ ±0.4 °C (0.72 °F)	≤ ±0.010 °C/°C (°F/°F)
Pt50	≤ ±0.16 °C (0.288 °F)	≤ ±0.004 °C/°C (°F/°F)
Pt100	≤ ±0.04 °C (0.072 °F)	≤ ±0.002 °C/°C (°F/°F)
Pt200	≤ ±0.08 °C (0.144 °F)	≤ ±0.002 °C/°C (°F/°F)
Pt500	$T_{max.}$ < 180 °C (356 °F) = ≤ ±0.08 °C (0.144 °F) $T_{max.}$ > 180 °C (356 °F) = ≤ ±0.16 °C (0.288 °F)	≤ ±0.002 °C/°C (°F/°F)
Pt1000	≤ ±0.08 °C (0.144 °F)	≤ ±0.002 °C/°C (°F/°F)
Pt2000	$T_{max.}$ < 300 °C (572 °F) = ≤ ±0.08 °C (0.144 °F) $T_{max.}$ > 300 °C (572 °F) = ≤ ±0.4 °C (0.72 °F)	≤ ±0.002 °C/°C (°F/°F)
Pt10000	≤ ±0.16 °C (0.288 °F)	≤ ±0.002 °C/°C (°F/°F)
Pt x	Largest tolerance of neighboring points	Largest temperature coefficient of neighboring points
Ni10	≤ ±1.6 °C (2.88 °F)	≤ ±0.020 °C/°C (°F/°F)
Ni20	≤ ±0.8 °C (1.44 °F)	≤ ±0.010 °C/°C (°F/°F)
Ni50	≤ ±0.32 °C (0.576 °F)	≤ ±0.004 °C/°C (°F/°F)
Ni100	≤ ±0.16 °C (0.288 °F)	≤ ±0.002 °C/°C (°F/°F)
Ni120	≤ ±0.16 °C (0.288 °F)	≤ ±0.002 °C/°C (°F/°F)
Ni200	≤ ±0.16 °C (0.288 °F)	≤ ±0.002 °C/°C (°F/°F)
Ni500	≤ ±0.16 °C (0.288 °F)	≤ ±0.002 °C/°C (°F/°F)
Ni1000	≤ ±0.16 °C (0.288 °F)	≤ ±0.002 °C/°C (°F/°F)

© Siemens 2020

SITRANS TR320 (HART, universal)

Input type	Basic accuracy	Temperature coefficient[1]
Ni2000	≤ ±0.16 °C (0.288 °F)	≤ ±0.002 °C/°C (°F/°F)
Ni10000	≤ ±0.32 °C (0.576 °F)	≤ ±0.002 °C/°C (°F/°F)
Ni x	Largest tolerance of neighboring points	Largest temperature coefficient of neighboring points
Cu5	≤ ±1.6 °C (2.88 °F)	≤ ±0.040 °C/°C (°F/°F)
Cu10	≤ ±0.8 °C (1.44 °F)	≤ ±0.020 °C/°C (°F/°F)
Cu20	≤ ±0.4 °C (0.72 °F)	≤ ±0.010 °C/°C (°F/°F)
Cu50	≤ ±0.16 °C (0.288 °F)	≤ ±0.004 °C/°C (°F/°F)
Cu100	≤ ±0.08 °C (0.144 °F)	≤ ±0.002 °C/°C (°F/°F)
Cu200	≤ ±0.08 °C (0.144 °F)	≤ ±0.002 °C/°C (°F/°F)
Cu500	≤ ±0.16 °C (0.288 °F)	≤ ±0.002 °C/°C (°F/°F)
Cu1000	≤ ±0.08 °C (0.144 °F)	≤ ±0.002 °C/°C (°F/°F)
Cu x	Largest tolerance of neighboring points	Largest temperature coefficient of neighboring points
Linear resistance		
0 ... 400 Ω	≤ ±40 mΩ	≤ ±2 mΩ/°C (1.11 mΩ/°F)
0 ... 100 kΩ	≤ ±4 Ω	≤ ±0.2 Ω/°C (0.11 Ω/°F)
Potentiometers		
0 ... 100%	< 0.05%	< ± 0.005%
Voltage input		
mV: -20 ... 100 mV	≤ ±5 µV	≤ ±0.2 µV/°C (0.11 µV/°F)
mV: -100 ... 1700 mV	≤ ±0.1 mV	≤ ±36 µV/°C (20 µV/°F)
mV: ± 800 mV	≤ ±0.1 mV	≤ ±32 µV/°C (17.8 µV/°F)
TC		
E	≤ ±0.2 °C (0.36 °F)	≤ ±0.025 °C/°C (°F/°F)
J	≤ ±0.25 °C (0.45 °F)	≤ ±0.025 °C/°C (°F/°F)
K	≤ ±0.25 °C (0.45 °F)	≤ ±0.025 °C/°C (°F/°F)
L	≤ ±0.35 °C (0.63 °F)	≤ ±0.025 °C/°C (°F/°F)
N	≤ ±0.4 °C (0.72 °F)	≤ ±0.025 °C/°C (°F/°F)
T	≤ ±0.25 °C (0.45 °F)	≤ ±0.025 °C/°C (°F/°F)
U	< 0 °C (32 °F) ≤ ±0.8 °C (1.44 °F) ≥ 0 °C (32 °F) ≤ ±0.4 °C (0.72 °F)	≤ ±0.025 °C/°C (°F/°F)
Lr	≤ ±0.2 °C (0.36 °F)	≤ ±0.1 °C/°C (°F/°F)
R	< 200 °C (392 °F) ≤ ±0.5 °C (0.9 °F) ≥ 200 °C (392 °F) ≤ ±1 °C (1.8 °F)	≤ ±0.1 °C/°C (°F/°F)
S	< 200 °C (392 °F) ≤ ±0.5 °C (0.9 °F) ≥ 200 °C (392 °F) ≤ ±1 °C (1.8 °F)	≤ ±0.1 °C/°C (°F/°F)
W3	≤ ±0.6 °C (1.08 °F)	≤ ±0.1 °C/°C (°F/°F)
W5	≤ ±0.4 °C (0.72 °F)	≤ ±0.1 °C/°C (°F/°F)
B[2]	≤ ±1 °C (1.8 °F)	≤ ±0.1 °C/°C (°F/°F)
B[3]	≤ ±3 °C (5.4 °F)	≤ ±0.1 °C/°C (°F/°F)
B[4]	≤ ±8 °C (14.4 °F)	≤ ±0.8 °C/°C (°F/°F)
B[5]	Not specified	Not specified
CJC (internal)	< ±0.5 °C (0.9 °F)	Included in basic accuracy
CJC (external)	≤ ±0.08 °C (0.144 °F)	≤ ±0.002 °C/°C (°F/°F)

1) Temperature coefficients correspond to the specified values or 0.002% of the input span, depending on which value is greater.
2) Accuracy of the specification range > 400 °C (752 °F)
3) Accuracy of the specification range > 160 °C (320 °F) < 400 °C (752 °F)
4) Accuracy of the specification range > 85 °C (185 °F) < 160 °C (320 °F)
5) Accuracy of the specification range < 85 °C (185 °F)

Output accuracy

Output type	Basic accuracy	Temperature coefficient
Analog output	≤ ±1.6 µA (0.01% of the full output span)	≤ ±0.48 µA/K (≤ ±0.003% of the full output span/K)

© Siemens 2020

Selection and ordering data

	Article No
SITRANS TR320 rail transmitter with 1 input ↗	**7NG032** ■ - ■■■■■ - 0 ■■■
↗ Click on the Article No. for the online configuration in the PIA Life Cycle Portal.	
Communication	
With HART	**0**
2-wire, 4 ... 20 mA	**7**
Primary value output	
Input 1	**0**
Input 1, type	
RTD	
• Pt100 (IEC), 3-wire	**B**
• Pt100 (IEC), 4-wire	**C**
• Pt1000 (IEC), 3-wire	**D**
• Pt1000 (IEC), 4-wire	**E**
TC	
• Type B	**F**
• Type E	**G**
• Type J	**H**
• Type K	**J**
• Type L	**K**
• Type N	**L**
• Type R	**N**
• Type S	**P**
• Type T	**Q**
Potentiometer, 4-wire	**R**
Input 1, type customer-specific	
Define customer-specific input configurations with V options	**Y**
Input 2, type	
Without input 2	**A**
CJC configuration for TC	
Without CJC	**0**
Internal CJC	**1**
External CJC Pt100 (IEC), 2-wire, define line resistance value in option Y53	**2**
External CJC Pt100 (IEC), 3-wire	**3**
External CJC Ni100 (DIN), 3-wire	**6**
Materials not in contact with media	
Without	**0**
Type of protection	
General safety (non-Ex); CE, RCM, FM, KCC, EAC	**A**
Intrinsic safety (Ex i) / Non-incendive field wiring (NIFW) / Increased safety zone 2 (Ex ec) / Non incendive (NI) (ATEX, IECEx, EACEx, CSA, FM, NEPSI, Inmetro)	**N**
Electrical connection/cable entry	
Without	**A**
Local HMI	
Without display	**0**

Options	Order code
Append "**-Z**" to Article No., add order code and, if applicable, free text.	
Manufacturer declarations	
Quality inspection certificate, 5-point factory calibration (IEC 60770-2)	**C11**
Certificates for functional safety	
Functional safety SIL2/3 (IEC 61508)	**C20**
Device options	
PDF file with device settings	**D10**
Without labeling of the measuring range on the TAG plate	**D41**
Jumper plug set on device for write protection	**D81**
Jumper plug set on device for fault current > 21 mA (instead of < 3.6 mA) (only non-SIL)	**D82**
Input 1: TC	
Type C W5	**V01**
Type D W3	**V02**
Type U	**V03**
Type Lr	**V04**
Input 1: RTD	
Pt x (IEC), 3-wire, define RTD factor x in option Y21	**V61**
Pt x (IEC), 4-wire, define RTD factor x in option Y21	**V62**
Pt x (JIS C1604-81), 3-wire, define RTD factor x in option Y21	**V64**
Pt x (JIS C1604-81), 4-wire, define RTD factor x in option Y21	**V65**
Pt x (GOST 6651-2009), 3-wire, define RTD factor x in option Y21	**V67**
Pt x (GOST 6651-2009), 4-wire, define RTD factor x in option Y21	**V68**
Ni x (DIN 43760-87), 3-wire, define RTD factor x in option Y21	**V70**
Ni x (DIN 43760-87), 4-wire, define RTD factor x in option Y21	**V71**
Ni x (GOST 6651-2009), 3-wire, define RTD factor x in option Y21	**V73**
Ni x (GOST 6651-2009), 4-wire, define RTD factor x in option Y21	**V74**
Cu x (ECW-15), 2-wire, define line resistance value in option Y51 and RTD factor x in option Y21	**V75**
Cu x (ECW-15), 3-wire, define RTD factor x in option Y21	**V76**
Cu x (ECW-15), 4-wire, define RTD factor x in option Y21	**V77**
Cu x (GOST 6651-94), 3-wire, define RTD factor x in option Y21	**V79**
Cu x (GOST 6651-94), 4-wire, define RTD factor x in option Y21	**V80**
Cu x (GOST 6651-2009), 3-wire, define RTD factor x in option Y21	**V82**
Cu x (GOST 6651-2009), 4-wire, define RTD factor x in option Y21	**V83**
Device settings	
Measuring range setting temperature input: Start of scale value (max. 5 characters), full scale value (max. 5 characters), unit (°C, °F, °Ra, K)	**Y01**
Customer-specific programming in plain text (n-lines)	**Y09**
Long tag (device parameter, max. 32 characters), adhesive label	**Y15**
Measuring point description (device parameter, max. 32 characters), adhesive label	**Y16**
Input 1: RTD factor; e.g. factor "200" = Pt200, adhesive label	**Y21**

© Siemens 2020

Accessories

	Article No.
Additional accessories for assembly, connection and transmitter configuration, see page 2/251.	
Modems	
Modem with USB interface	**7MF4997-1DB**
Modem with USB interface and SIPROM T software	**7NG3092-8KN**
SIMATIC PDM parameterization software	See Catalog FI 01 section 8

Ordering example

7NG0320-0BA00-0AA0-Z Y01

Y01: -10 ... +100 °C

Factory setting

- Pt100 (IEC 751); 3-wire connection
- Measuring range: 0 ... 100 °C (32 ... 212 °F)
- Fault current
  - Device error: < 3.6 mA
  - Input circuit wire break: 22.8 mA
  - Input circuit short circuit: 22.4 mA
  - Input monitoring wire break and short-circuit
- No trimming of input and output (offset)
- Damping 0.0 s

Dimensional drawings

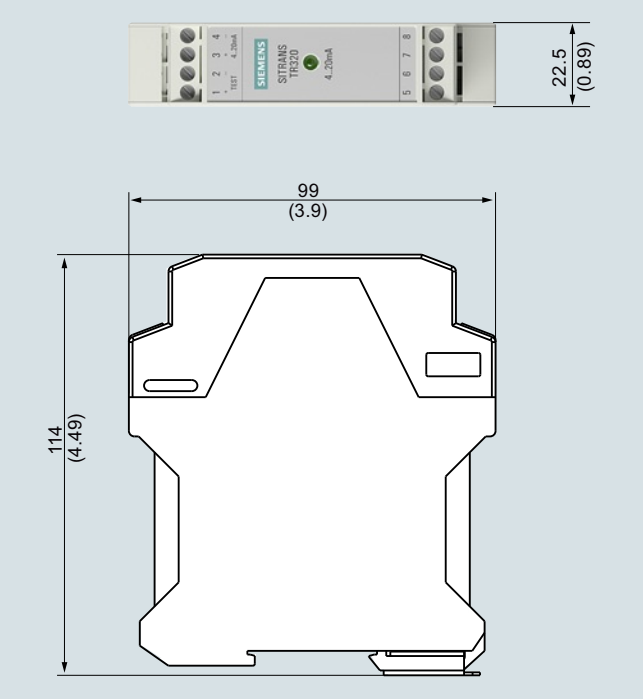

SITRANS TR320, dimensions in mm (inch)

© Siemens 2020

Circuit diagrams

Connections

1 (+) and 2 (-)	Test terminals for measurement of the output current with an amperemeter
3 (+) and 4 (-)	Output terminals
5, 6, 7 and 8	Input terminals

SITRANS TR320, connector assignment

Output and test connection

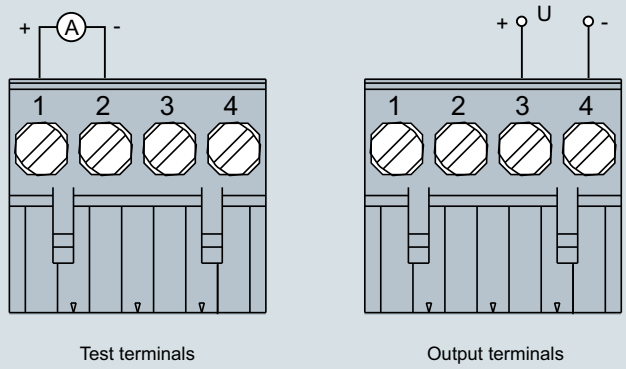

SITRANS TR320, output connection assignment

Input connection

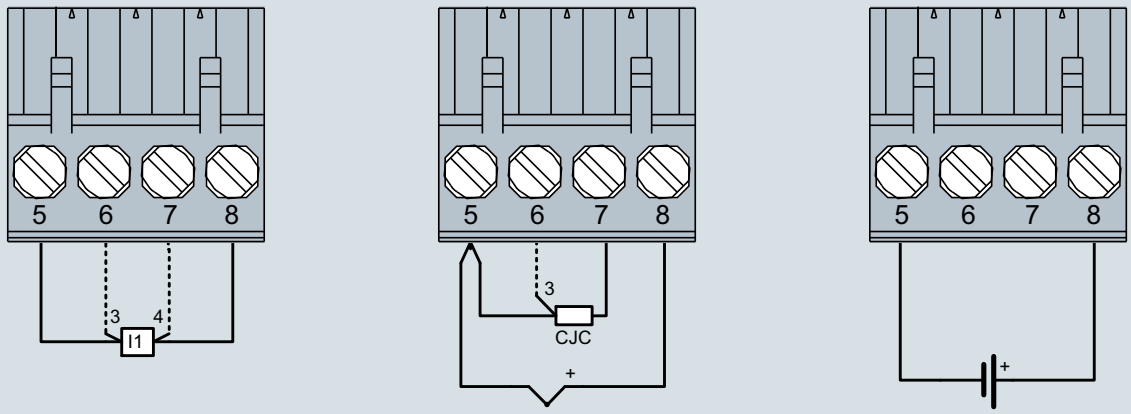

SITRANS TR320, input connection assignment

© Siemens 2020

SITRANS TR420 (HART, universal)

Overview

- 2-wire rail transmitter with HART communications interface
- Device for rail mounting
- Universal input for virtually any type of temperature sensor
- Connection of two independent input circuits for redundant operation (high input availability)
- Input drift detection
- Configurable via HART 7

Benefits

- Compact design
- Connection of two independent input circuits for redundant operation (high input availability)
- Galvanic isolation
- Test terminals for ammeter
- Diagnostics LED (green/red)
- Input monitoring
  Wire break and short-circuit
- Self-monitoring
- Configuration status stored in EEPROM
- Expanded diagnostic functions, such as slave pointer, operating hours counter, etc.
- Special characteristic
- Electromagnetic compatibility according to DIN EN 61326 and NE21
- SIL2/3 (with order note C20)

Application

SITRANS TR420 transmitters with two inputs can be used in all sectors. Their compact design enables simple mounting on standard DIN rails on-site in protective boxes or in control cabinets. The following sensors/signal sources can be connected over their universal input module:

- 2 resistance thermometers (2-wire, 3-wire, 4-wire connection)
- 2 thermocouples
- 2 linear resistors, potentiometer and DC voltage sources

The output signal is a load-independent direct current from 4 to 20 mA in accordance with the input characteristic, superimposed by the digital HART signal.

The dual input mode also supports drift detection of the inputs, whereby maintenance intervals can be more easily planned.

Transmitters of the "intrinsically safe or Zone 2 increased safety" type of protection can be installed in hazardous areas. The device meets the requirements of the EU Directive 2014/34/EU (ATEX), the FM and CSA regulations as well as other national approvals.

© Siemens 2020

Function

The SITRANS TR420 is configured via HART. The configuration can be carried out using a handheld communicator or, more conveniently, with a HART modem and the SIMATIC PDM configuration software. The configuration data are then permanently stored in the non-volatile memory (EEPROM).

After correct connection of input and supply voltage, the transmitter outputs a temperature-linear output signal and the diagnostics LED is green. In case of external errors, e.g. sensor short circuit or interruption, the LED flashes red; an internal error is indicated by a permanent red light.

An ammeter can be connected at any time for checking and plausibility via the test terminals. The output current can be read without any interruption, or even without opening the current loop.

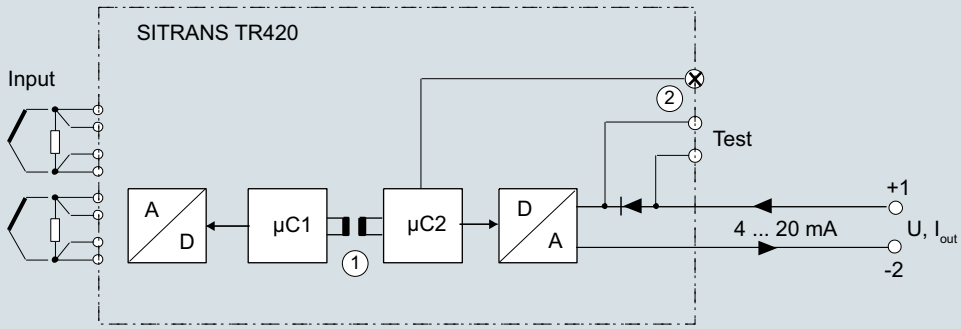

Input		Output	
A/D	Analog-digital converter	µC2	Microcontroller, primary circuit
µC1	Microcontroller, secondary circuit	D/A	Digital-analog converter
		U	Supply Voltage
		I_{out}	Output current
1	Galvanic isolation	2	LED

SITRANS TR420, function block diagram

© Siemens 2020

Technical specifications

General	
Supply voltage[1) 2)]	
• Without explosion protection (non-Ex)	7.5 ... 48 V DC
• with explosion protection (Ex i)	7.5 ... 30 V DC
Additional minimum supply voltage when using test terminals	0.8 V
Maximum power loss	≤ 850 mW
Minimum load resistance at supply voltage > 37 V	(V_{supply} - 37 V)/23 mA
Insulation voltage, test/operation	
• Without explosion protection (non-Ex)	2.5 kV AC/55 V AC
• with explosion protection (Ex i)	2.5 kV AC/42 V AC
Polarity protection	All inputs and outputs
Write protection	Open circuits or software
Warming-up time	< 5 min
Starting time	< 2.75 s
Programming	SIPROM T and HART
Signal-to-noise ratio	> 60 dB
Long-term stability	Better than: • ± 0.05% of measuring span/year • ± 0.18% of measuring span/5 years
Response time	≤ 75 ms (typically 70 ms)
Programmable damping	0 ... 60 s
Signal dynamic	
• Input	24 bit
• Output	18 bit
Influence of change in supply voltage	< 0.005% of measuring span/V DC
Input	
Resistance thermometer (RTD)	
Input type	
• Pt10 ... 10000	• IEC 60751 • JIS C 1604-8 • GOST 6651_2009 • Callendar-Van Dusen
• Ni10 ... 10000	• DIN 43760-1987 • GOST 6651-2009/OIML R84:2003
• Cu5 ... 1000	• Edison Copper Winding No. 15 • GOST 6651-2009/OIML R84:2003
Type of connection	2-wire, 3-wire or 4-wire
Line resistance per wire	Max. 50 Ω
Input current	< 0.15 mA
Effect of the line resistance (with 3-wire and 4-wire connections)	< 0.002 Ω/Ω
Cable, wire-wire capacity	
• Pt1000, Pt10000 (IEC 60751 and JIS C 1604-8)	Max. 30 nF
• All other input types	Max. 50 nF
Fault detection, programmable	None, short-circuited, defective, short-circuited or defective **Note** When the low limit for the configured input type is below the constant detection limit for short-circuited inputs, the detection of short circuits is disabled regardless of the configuration of the fault detection.
Detection limit for short-circuited input	15 Ω
Fault detection time (RTD)	≤ 75 ms (typically 70 ms)
Fault detection time (for 3-wire and 4-wire)	≤ 2 000 ms

Thermocouples (TC)	
Input type	
• B	IEC 60584-1
• E	IEC 60584-1
• J	IEC 60584-1
• K	IEC 60584-1
• L	DIN 43710
• Lr	GOST 3044-84
• N	IEC 60584-1
• R	IEC 60584-1
• S	IEC 60584-1
• T	IEC 60584-1
• U	DIN 43710
• W3	ASTM E988-96
• W5	ASTM E988-96
• LR	GOST 3044-84
Cold junction compensation (CJC)	Constant, internal or external over Pt100 or Ni100 RTD
• Temperature range internal CJC	-50 ... +100 °C (-58 ... +212 °F)
• Connection external CJC	2-wire, 3-wire or 4-wire
• External CJC, line resistance per wire (for 3-wire and 4-wire connections)	50 Ω
• Effect of the line resistance (with 3-wire and 4-wire connections)	< 0.002 Ω/Ω
• Input current external CJC	< 0.15 mA
• Temperature range external CJC	-50 ... +135 °C (-58 ... +275 °F)
• Cable, wire-wire capacity	Max. 50 nF
• Total line resistance	Max. 10 kΩ
• Fault detection, programmable	None, short-circuited, defective, short-circuited or defective **Note** The short-circuited fault detection only applies to the CJC input.
• Fault detection time (TC)	≤ 75 ms (typically 70 ms)
• Fault detection time, external CJC (for 3-wire and 4-wire)	≤ 2 000 ms
Linear resistance	
Input range	0 ... 100 kΩ
Minimum measuring span	25 Ω
Type of connection	2-wire, 3-wire or 4-wire
Line resistance per wire	Max. 50 Ω
Input current	< 0.15 mA
Effect of the line resistance (with 3-wire and 4-wire connections)	< 0.002 Ω/Ω
Cable, wire-wire capacity	
• R > 400 Ω	Max. 30 nF
• R ≤ 400 Ω	Max. 50 nF
Fault detection, programmable	None, defective
Potentiometers	
Input range	10 ... 100 kΩ
Minimum measuring span	25 Ω
Type of connection	3-wire, 4-wire or 5-wire
Line resistance per wire	Max. 50 Ω
Input current	< 0.15 mA
Effect of the line resistance (with 4-wire and 5-wire connections)	< 0.002 Ω/Ω
Cable, wire-wire capacity	
• R > 400 Ω	Max. 30 nF
• R ≤ 400 Ω	Max. 50 nF

© Siemens 2020

Fault detection, programmable	None, short-circuited, defective, short-circuited or defective **Note** When the configured potentiometer size is below the constant detection limit for short-circuited inputs, the detection of short circuits is disabled regardless of the configuration of the fault detection.
Detection limit for short-circuited input	15 Ω
Fault detection time, wiper arm (no short-circuit detection)	≤ 75 ms (typically 70 ms)
Fault detection time, element	≤ 2 000 ms
Fault detection time (for 4-wire and 5-wire)	≤ 2 000 ms
Voltage input	
Measuring range	
• Unipolar	-100 ... 1700 mV
• Bipolar	-800 ... +800 mV
Minimum measuring span	2.5 mV
Input resistance	10 MΩ
Cable, wire-wire capacity	
• Input range: -100 ... 1700 mV	Max. 30 nF
• Input range: -20 ... 100 mV	Max. 50 nF
Fault detection, programmable	None, defective
Fault detection time	≤ 75 ms (typically 70 ms)
Output and HART communication	
Normal range, programmable	3.8 ... 20.5 mA/20.5 ... 3.8 mA
Extended range (output limits), programmable	3.5 ... 23 mA/23 ... 3.5 mA
Programmable input/output limits	
• Fault current	Enable/disable
• Fault current setting	3.5 ... 23 mA
Update time	10 ms
Load (with current output)	≤ (V_{Supply} - 7.5)/0.023 Ω
Load stability	< 0.01% of meas. span/100 Ω (measuring span = currently selected range)
Input fault detection, programmable (detection of input short circuits is ignored with TC and voltage inputs)	3.5 ... 23 mA
NAMUR NE43 Upscale	> 21 mA
NAMUR NE43 Downscale	< 3.6 mA
HART protocol versions	HART 7
Measuring accuracy	
Input accuracy	See "Input accuracy" table
Output accuracy	See "Output accuracy" table
Rated conditions	
Ambient temperature	-50 ... +85 °C (-58 ... +185 °F)
Ambient temperature for devices with functional safety	-40 ... +80 °C (-40 ... +176 °F)
Storage temperature	-50 ... +85 °C (-58 ... +185 °F)
Reference temperature for sensor calibration	24 °C ±1.0 °C (75.2 °F ±1.8 °F)
Relative humidity	< 99% (no condensation)
Degree of protection	
• Transmitter enclosure	IP20
• Terminals	IP20

Design	
Weight	122 g (0.27 lb)
Maximum core cross-section	2.5 mm² (AWG 13)
Tightening torque for clamping screws	0.5 ... 0.6 Nm
Vibrations	IEC 60068-2-6
• 2 ... 25 Hz	± 1.6 mm (0.07 inch)
• 25 ... 100 Hz	± 4 g
Certificates and approvals	
Explosion protection ATEX/IECEx and others	
Certificates[3]	DEKRA 17ATEX0116 X IECEx DEK 17.0054X A5E43700604A-2018X
"Intrinsic safety ia/ib" type of protection	For use in Zone 0, 1, 2, 20, 21, 22
• ATEX	II 1 G Ex ia IIC T6 ... T4 Ga II 2(1) G Ex ib [ia Ga] IIC T6 ... T4 Gb II 1 D Ex ia IIIC Da I M1 Ex ia I Ma
• IECEx and others	Ex ia IIC T6 ... T4 Ga Ex ib [ia Ga] IIC T6 ... T4 Gb Ex ia IIIC Da Ex ia I Ma
"Intrinsic safety ic" type of protection	For use in Zones 2 and 22
• ATEX	II 2 G Ex ic IIC T6…T4 Gc II 2 D Ex ic IIIC Dc
• IECEx and others	Ex ic IIC T6 ... T4 Gc Ex ic IIIC Dc
"Non-sparking/increased safety nA/ec" type of protection	For use in Zones 2 and 22
• ATEX	II 2 G Ex nA IIC T6…T4 Gc II 2 G Ex ec IIC T6…T4 Gc
• IECEx and others	Ex nA IIC T6 ... T4 Gc Ex ec IIC T6 ... T4 Gc
Explosion protection CSA/FM for Canada and USA	
Certificates	CSA 1861385 FM18CA0024 FM18US0046
"Intrinsic safety ia" type of protection	IS, CL I, Div 1, GP ABCD, T6 ... T4 Ex ia IIC T6 … T4 Ga AEx ia IIC T6 … T4 Ga or: Ex ib [ia Ga] IIC T6…T4 Gb AEx ib [ia Ga] IIC T6…T4 Gb
"Non incendive field wiring NIFW" type of protection	NIFW, CL I, Div 2, GP ABCD T6 ... T4
"Non incendive NI" type of protection	NI, CL I, Div 2, GP ABCD T6...T4 Ex nA IIC T6 ... T4 Gc AEx nA IIC T6 ... T4 Gc

1) Note that the minimum supply voltage must correspond to the value measured at the terminals of the SITRANS TR420.
All external voltage drops must be taken into consideration.

2) Protect the device from overvoltage with the help of a suitable power supply or suitable overvoltage protection equipment.

3) Additional available certificates are listed on the Internet at http://www.siemens.com/processinstrumentation/certificates

© Siemens 2020

SITRANS TR420 (HART, universal)

Measuring ranges/Minimum measuring span

RTD

Input type	Standard	Measuring range in °C (°F)	α_0 in °C^{-1} (°F^{-1})	Minimum measuring span in °C (°F)
Pt10 ... 10000	IEC 60751	-200 ... +850 (-328 ... +1 562)	0.003851 (0.002139)	10 (50)
	JIS C 1604-8	-200 ... +649 (-328 ... +1 200)	0.003916 (0.002176)	10 (50)
	GOST 6651_2009	-200 ... +850 (-328 ... +1 562)	0.003910 (0.002172)	10 (50)
	Callendar-Van Dusen	-200 ... +850 (-328 ... +1 562)	-	10 (50)
Ni10 ... 10000	DIN 43760-1987	-60 ... +250 (-76 ... +482)	0.006180 (0.003433)	10 (50)
	GOST 6651-2009/OIML R84:2003	-60 ... +180 (-76 ... +356)	0.006170 (0.003428)	10 (50)
Cu5 ... 1000	Edison Copper Winding No. 15	-200 ... +260 (-328 ... +500)	0.004270 (0.002372)	100 (212)
	GOST 6651-2009/OIML R84:2003	-180 ... +200 (-292 ... +392)	0.004280 (0.002378)	100 (212)
	GOST 6651-94	-50 ... +200 (-58 ... +392)	0.004260 (0.002367)	100 (212)

TC

Input type	Standard	Measuring range in °C (°F)	Minimum measuring span in °C (°F)
B	IEC 60584-1	0 (85) ... 1 820 (32 (185) ... 3 308)	100 (212)
E	IEC 60584-1	-200 ... +1 000 (-392 ... +1 832)	50 (122)
J	IEC 60584-1	-100 ... +1 200 (-212 ... +2 192)	50 (122)
K	IEC 60584-1	-180 ... +1 372 (-356 ... +2 502)	50 (122)
L	DIN 43710	-200 ... +900 (-392 ... +1 652)	50 (122)
Lr	GOST 3044-84	-200 ... +800 (-392 ... +1 472)	50 (122)
N	IEC 60584-1	-180 ... +1 300 (-356 ... +2 372)	50 (122)
R	IEC 60584-1	-50 ... +1 760 (-122 ... +3 200)	100 (212)
S	IEC 60584-1	-50 ... +1 760 (-122 ... +3 200)	100 (212)
T	IEC 60584-1	-200 ... +400 (-392 ... +752)	50 (122)
U	DIN 43710	-200 ... +600 (-392 ... +1 112)	50 (122)
W3	ASTM E988-96	0 ... 2 300 (32 ... 4 172)	100 (212)
W5	ASTM E988-96	0 ... 2 300 (32 ... 4 172)	100 (212)
LR	GOST 3044-84	-200 ... +800 (-392 ... +1472)	50 (122)

Input accuracy

Basic values

Input type	Basic accuracy	Temperature coefficient[1)]
RTD		
Pt10	≤ ±0.8 °C (1.44 °F)	≤ ±0.020 °C/°C (°F/°F)
Pt20	≤ ±0.4 °C (0.72 °F)	≤ ±0.010 °C/°C (°F/°F)
Pt50	≤ ±0.16 °C (0.288 °F)	≤ ±0.004 °C/°C (°F/°F)
Pt100	≤ ±0.04 °C (0.072 °F)	≤ ±0.002 °C/°C (°F/°F)
Pt200	≤ ±0.08 °C (0.144 °F)	≤ ±0.002 °C/°C (°F/°F)
Pt500	$T_{max.}$ < 180 °C (356 °F) = ≤ ±0.08 °C (0.144 °F) $T_{max.}$ > 180 °C (356 °F) = ≤ ±0.16 °C (0.288 °F)	≤ ±0.002 °C/°C (°F/°F)
Pt1000	≤ ±0.08 °C (0.144 °F)	≤ ±0.002 °C/°C (°F/°F)
Pt2000	$T_{max.}$ < 300 °C (572 °F) = ≤ ±0.08 °C (0.144 °F) $T_{max.}$ > 300 °C (572 °F) = ≤ ±0.4 °C (0.72 °F)	≤ ±0.002 °C/°C (°F/°F)
Pt10000	≤ ±0.16 °C (0.288 °F)	≤ ±0.002 °C/°C (°F/°F)
Pt x	Largest tolerance of neighboring points	Largest temperature coefficient of neighboring points
Ni10	≤ ±1.6 °C (2.88 °F)	≤ ±0.020 °C/°C (°F/°F)
Ni20	≤ ±0.8 °C (1.44 °F)	≤ ±0.010 °C/°C (°F/°F)
Ni50	≤ ±0.32 °C (0.576 °F)	≤ ±0.004 °C/°C (°F/°F)
Ni100	≤ ±0.16 °C (0.288 °F)	≤ ±0.002 °C/°C (°F/°F)
Ni120	≤ ±0.16 °C (0.288 °F)	≤ ±0.002 °C/°C (°F/°F)
Ni200	≤ ±0.16 °C (0.288 °F)	≤ ±0.002 °C/°C (°F/°F)
Ni500	≤ ±0.16 °C (0.288 °F)	≤ ±0.002 °C/°C (°F/°F)
Ni1000	≤ ±0.16 °C (0.288 °F)	≤ ±0.002 °C/°C (°F/°F)

© Siemens 2020

Input type	Basic accuracy	Temperature coefficient[1]
Ni2000	≤ ±0.16 °C (0.288 °F)	≤ ±0.002 °C/°C (°F/°F)
Ni10000	≤ ±0.32 °C (0.576 °F)	≤ ±0.002 °C/°C (°F/°F)
Ni x	Largest tolerance of neighboring points	Largest temperature coefficient of neighboring points
Cu5	≤ ±1.6 °C (2.88 °F)	≤ ±0.040 °C/°C (°F/°F)
Cu10	≤ ±0.8 °C (1.44 °F)	≤ ±0.020 °C/°C (°F/°F)
Cu20	≤ ±0.4 °C (0.72 °F)	≤ ±0.010 °C/°C (°F/°F)
Cu50	≤ ±0.16 °C (0.288 °F)	≤ ±0.004 °C/°C (°F/°F)
Cu100	≤ ±0.08 °C (0.144 °F)	≤ ±0.002 °C/°C (°F/°F)
Cu200	≤ ±0.08 °C (0.144 °F)	≤ ±0.002 °C/°C (°F/°F)
Cu500	≤ ±0.16 °C (0.288 °F)	≤ ±0.002 °C/°C (°F/°F)
Cu1000	≤ ±0.08 °C (0.144 °F)	≤ ±0.002 °C/°C (°F/°F)
Cu x	Largest tolerance of neighboring points	Largest temperature coefficient of neighboring points
Linear resistance		
0 ... 400 Ω	≤ ±40 mΩ	≤ ±2 mΩ/°C (1.11 mΩ/°F)
0 ... 100 kΩ	≤ ±4 Ω	≤ ±0.2 Ω/°C (0.11 Ω/°F)
Potentiometers		
0 ... 100%	< 0.05%	< ± 0.005%
Voltage input		
mV: -20 ... 100 mV	≤ ±5 µV	≤ ±0.2 µV/°C (0.11 µV/°F)
mV: -100 ... 1700 mV	≤ ±0.1 mV	≤ ±36 µV/°C (20 µV/°F)
mV: ± 800 mV	≤ ±0.1 mV	≤ ±32 µV/°C (17.8 µV/°F)
TC		
E	≤ ±0.2 °C (0.36 °F)	≤ ±0.025 °C/°C (°F/°F)
J	≤ ±0.25 °C (0.45 °F)	≤ ±0.025 °C/°C (°F/°F)
K	≤ ±0.25 °C (0.45 °F)	≤ ±0.025 °C/°C (°F/°F)
L	≤ ±0.35 °C (0.63 °F)	≤ ±0.025 °C/°C (°F/°F)
N	≤ ±0.4 °C (0.72 °F)	≤ ±0.025 °C/°C (°F/°F)
T	≤ ±0.25 °C (0.45 °F)	≤ ±0.025 °C/°C (°F/°F)
U	< 0 °C (32 °F) ≤ ±0.8 °C (1.44 °F) ≥ 0 °C (32 °F) ≤ ±0.4 °C (0.72 °F)	≤ ±0.025 °C/°C (°F/°F)
Lr	≤ ±0.2 °C (0.36 °F)	≤ ±0.1 °C/°C (°F/°F)
R	< 200 °C (392 °F) ≤ ±0.5 °C (0.9 °F) ≥ 200 °C (392 °F) ≤ ±1 °C (1.8 °F)	≤ ±0.1 °C/°C (°F/°F)
S	< 200 °C (392 °F) ≤ ±0.5 °C (0.9 °F) ≥ 200 °C (392 °F) ≤ ±1 °C (1.8 °F)	≤ ±0.1 °C/°C (°F/°F)
W3	≤ ±0.6 °C (1.08 °F)	≤ ±0.1 °C/°C (°F/°F)
W5	≤ ±0.4 °C (0.72 °F)	≤ ±0.1 °C/°C (°F/°F)
B[2]	≤ ±1 °C (1.8 °F)	≤ ±0.1 °C/°C (°F/°F)
B[3]	≤ ±3 °C (5.4 °F)	≤ ±0.1 °C/°C (°F/°F)
B[4]	≤ ±8 °C (14.4 °F)	≤ ±0.8 °C/°C (°F/°F)
B[5]	Not specified	Not specified
CJC (internal)	< ±0.5 °C (0.9 °F)	Included in basic accuracy
CJC (external)	≤ ±0.08 °C (0.144 °F)	≤ ±0.002 °C/°C (°F/°F)

1) Temperature coefficients correspond to the specified values or 0.002% of the input span, depending on which value is greater.
2) Accuracy of the specification range > 400 °C (752 °F)
3) Accuracy of the specification range > 160 °C (320 °F) < 400 °C (752 °F)
4) Accuracy of the specification range > 85 °C (185 °F) < 160 °C (320 °F)
5) Accuracy of the specification range < 85 °C (185 °F)

Output accuracy

Output type	Basic accuracy	Temperature coefficient
Average value measurement	Average of accuracy of input 1 and input 2	Average of temperature coefficient of input 1 and input 2
Differential measurement	Sum of accuracy of input 1 and input 2	Sum of temperature coefficient of input 1 and input 2
Analog output	≤ ±1.6 µA (0.01% of the full output span)	≤ ±0.48 µA/K (≤ ±0.003% of the full output span/K)

© Siemens 2020

Selection and ordering data

	Article No.	Order code
SITRANS TR420 rail transmitter with 2 inputs ↗	**7NG042** ■ - ■■■■■ - 0 ■■■	■■■
↗ Click on the Article No. for the online configuration in the PIA Life Cycle Portal.		
Communication		
With HART	**0**	
Primary value output		
Input 1	**0**	
Input 1, input 2 as redundancy	**1**	
Input 2, input 1 as redundancy	**2**	
Average input 1 and input 2, both as redundancy	**3**	
Minimum input 1 and input 2, both as redundancy	**4**	
Maximum input 1 and input 2, both as redundancy	**5**	
Difference input 1 - input 2	**6**	
Difference input 2 - input 1	**7**	
Absolute difference	**8**	
Primary value output, customer-specific		
Minimum input 1 and input 2, without redundancy	**9**	**H 1 A**
Maximum input 1 and input 2, without redundancy	**9**	**H 1 B**
Average input 1 and input 2, without redundancy	**9**	**H 1 C**
Input 2	**9**	**H 1 D**
Input 1, type		
RTD		
• Pt100 (IEC), 3-wire	**B**	
• Pt100 (IEC), 4-wire	**C**	
• Pt1000 (IEC), 3-wire	**D**	
• Pt1000 (IEC), 4-wire	**E**	
TC		
• Type B	**F**	
• Type E	**G**	
• Type J	**H**	
• Type K	**J**	
• Type L	**K**	
• Type N	**L**	
• Type R	**N**	
• Type S	**P**	
• Type T	**Q**	
Potentiometer, 4-wire	**R**	
Input 1, type customer-specific		
Define customer-specific input configurations in V options	**Y**	

	Article No.	Order code
SITRANS TR420 rail transmitter with 2 inputs	**7NG042** ■ - ■■■■■ - 0 ■■■	■■■
Input 2, type		
Without input 2	**A**	
RTD		
• Pt100 (IEC), 3-wire	**B**	
• Pt100 (IEC), 4-wire	**C**	
• Pt1000 (IEC), 3-wire	**D**	
• Pt1000 (IEC), 4-wire	**E**	
TC		
• Type B	**F**	
• Type E	**G**	
• Type J	**H**	
• Type K	**J**	
• Type L	**K**	
• Type N	**L**	
• Type R	**N**	
• Type S	**P**	
• Type T	**Q**	
Potentiometer, 4-wire	**R**	
Input 2, type customer-specific		
Define customer-specific input configurations in W options	**Y**	
CJC configuration for TC		
Input 1: no CJC; input 2: No CJC	**0**	
Input 1: internal CJC; input 2: internal CJC	**1**	
Input 1: external CJC; input 2: external CJC; define type in option Jxx	**2**	
Input 1: external CJC; define type in option Jxx; input 2: internal CJC	**3**	
Input 1: internal CJC; input 2: external CJC; define type in option Jxx	**4**	
Input 1: Internal CJC; Input 2: No CJC	**5**	
Input 1: External CJC (define type in option Jxx); input 2: No CJC	**6**	
Materials not in contact with media		
Without	**0**	
Type of protection		
General safety (non-Ex); CE, RCM, FM, KCC, EAC	**A**	
Intrinsic safety (Ex i) / Non-incendive field wiring (NIFW) / Increased safety zone 2 (Ex ec) / Non incendive (NI) (ATEX, IECEx, EACEx, CSA, FM, NEPSI, Inmetro)	**N**	
Electrical connection/ cable entry		
Without	**A**	
Local HMI		
Without display		**0**

© Siemens 2020

Options	Order code
Append "**-Z**" to Article No., add order code and, if applicable, free text.	
Manufacturer declarations	
Quality inspection certificate, 5-point factory calibration (IEC 60770-2)	**C11**
Certificates for functional safety	
Functional safety SIL2/3 (IEC 61508)	**C20**
Device options	
PDF file with device settings	**D10**
Without labeling of the measuring range on the TAG plate	**D41**
Jumper plug set on device for write protection	**D81**
Jumper plug set on device for fault current > 21 mA (instead of < 3.6 mA) (only non-SIL)	**D82**
External CJC types	
Pt100, IEC 60751, 3-wire	**J02**
Pt100, IEC 60751, 4-wire	**J03**
Ni100, DIN 43760-87, 3-wire	**J05**
Ni100, DIN 43760-87, 4-wire	**J06**
Input 1: TC	
Type C W5	**V01**
Type D W3	**V02**
Type U	**V03**
Type Lr	**V04**
Input 1: Potentiometers	
Potentiometer, 5-wire	**V31**
Input 1: RTD	
Pt x (IEC), 3-wire, define RTD factor x in option Y21	**V61**
Pt x (IEC), 4-wire, define RTD factor x in option Y21	**V62**
Pt x (JIS C1604-81), 3-wire, define RTD factor x in option Y21	**V64**
Pt x (JIS C1604-81), 4-wire, define RTD factor x in option Y21	**V65**
Pt x (GOST 6651-2009), 3-wire, define RTD factor x in option Y21	**V67**
Pt x (GOST 6651-2009), 4-wire, define RTD factor x in option Y21	**V68**
Ni x (DIN 43760-87), 3-wire, define RTD factor x in option Y21	**V70**
Ni x (DIN 43760-87), 4-wire, define RTD factor x in option Y21	**V71**
Ni x (GOST 6651-2009), 3-wire, define RTD factor x in option Y21	**V73**
Ni x (GOST 6651-2009), 4-wire, define RTD factor x in option Y21	**V74**
Cu x (ECW-15), 3-wire, define RTD factor x in option Y21	**V76**
Cu x (ECW-15), 4-wire, define RTD factor x in option Y21	**V77**
Cu x (GOST 6651-94), 3-wire, define RTD factor x in option Y21	**V79**
Cu x (GOST 6651-94), 4-wire, define RTD factor x in option Y21	**V80**
Cu x (GOST 6651-2009), 3-wire, define RTD factor x in option Y21	**V82**
Cu x (GOST 6651-2009), 4-wire, define RTD factor x in option Y21	**V83**
Input 2: TC	
Type C W5	**W01**
Type D W3	**W02**
Type U	**W03**
Type Lr	**W04**

Options	Order code
Append "**-Z**" to Article No., add order code and, if applicable, free text.	
Device settings	
Measuring range setting temperature input: Start of scale value (max. 5 characters), full scale value (max. 5 characters), unit (°C, °F, °Ra, K)	**Y01**
Customer-specific programming in plain text (n-lines)	**Y09**
Long tag (device parameter, max. 32 characters), adhesive label	**Y15**
Measuring point description (device parameter, max. 32 characters), adhesive label	**Y16**
Input 1: RTD factor; e.g. factor "200" = Pt200, adhesive label	**Y21**

Accessories

	Article No.
Additional accessories for assembly, connection and transmitter configuration, see page 2/251.	
Modem	
Modem with USB interface	**7MF4997-1DB**
SIMATIC PDM parameterization software	See Catalog FI 01 section 8

Ordering example

7NG0420-0BA00-0AA0-Z Y01

Y01: -10 ... +100 °C

Factory setting

- Input 1: Pt100 (IEC 751); 3-wire connection
- Input 2: not configured (inactive)
- Measuring range: 0 ... 100 °C (32 ... 212 °F)
- Fault current
  - Device error: < 3.6 mA
  - Input circuit wire break: 22.8 mA
  - Input circuit short circuit: 22.4 mA
  - Input circuit drift: 22 mA (active when input 2 is active)
  - Input monitoring wire break and short-circuit
- No trimming of input and output (offset)
- Damping 0.0 s

© Siemens 2020

Dimension drawings

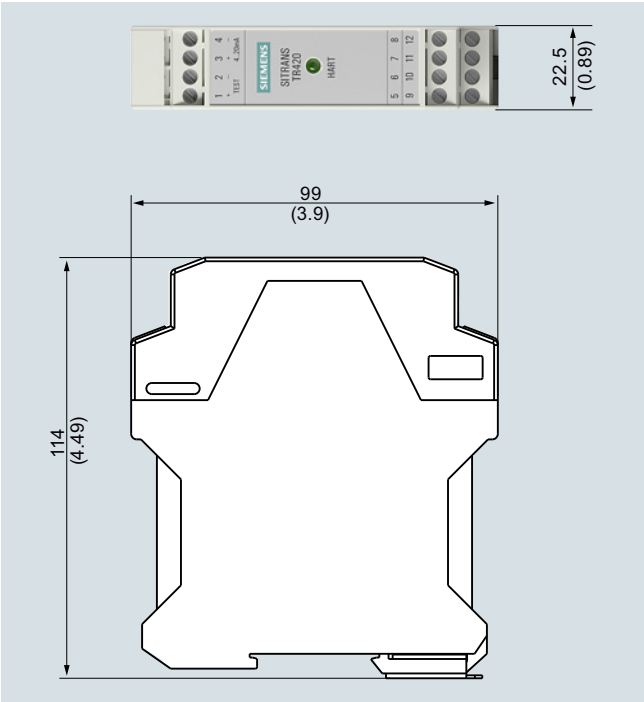

SITRANS TR420, dimensions in mm (inch)

Circuit diagrams

Connections

1 (+) and 2 (-)	Test terminals for measurement of the output current with an amperemeter
3 (+) and 4 (-)	Output terminals
5, 6, 7 and 8	Input 1 terminals
9, 10, 11 and 12	Input 2 terminals

SITRANS TR420, connector assignment

Output and test connection

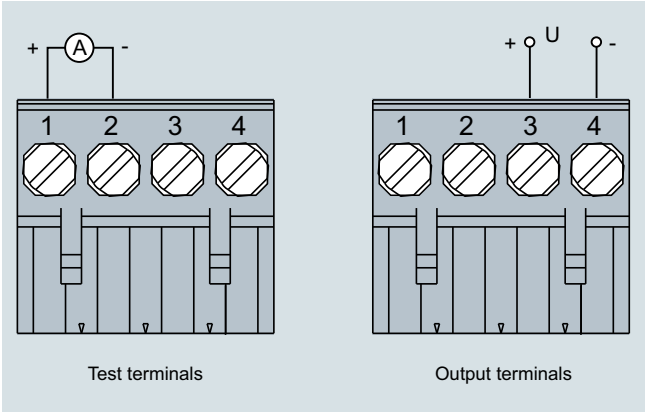

SITRANS TR420, output connection assignment

© Siemens 2020

Input connection

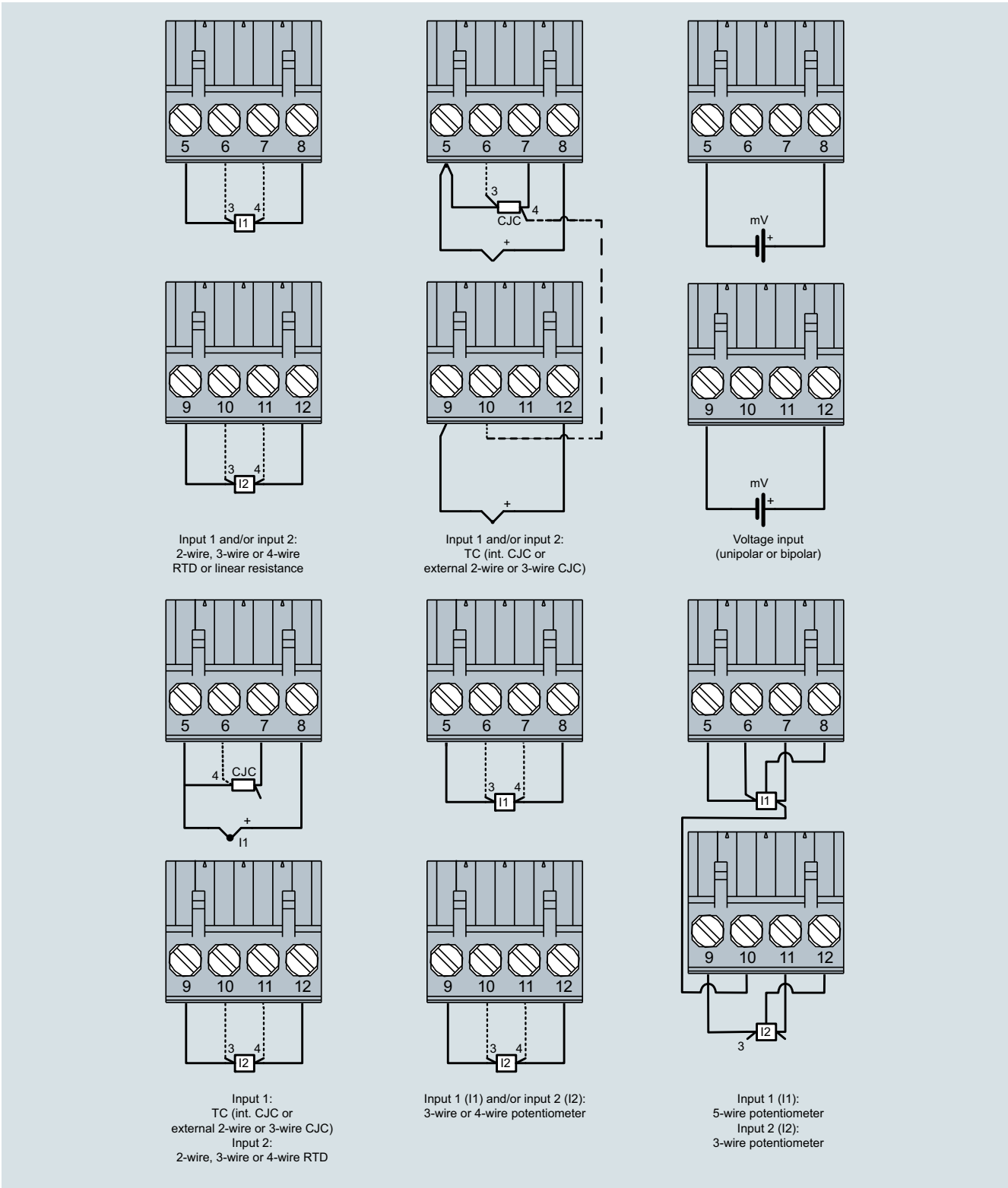

SITRANS TR420, input connection assignment

© Siemens 2020

SITRANS TF - Transmitter, 2-wire system and SITRANS TF - Field indicator for 4 to 20 mA

Overview

Our field devices for heavy industrial use

- HART, Universal
- 4 to 20 mA, universal
- Field indicator for 4 to 20 mA signals

The temperature transmitter SITRANS TF works where others feel uncomfortable.

Benefits

- Universal use
  - as transmitter for resistance thermometer, thermocouple element, Ω or mV signal
  - as field indicator for any 4 to 20 mA signals
- Local sensing of measured values over digital display
- Rugged two-chamber enclosure in die-cast aluminum or stainless steel
- IP66/67/68 degree of protection
- Test terminals for direct read-out of the output signal without breaking the current loop
- Can be mounted elsewhere if the measuring point
  - is difficult to access
  - has high temperatures
  - experiences vibrations due to the process cell
  - is to avoid long neck pipes and thermowells
- Can be mounted directly on American-design sensors
- Wide range of approvals for use in potentially explosive atmospheres. Types of protection "Intrinsically safe, non-sparking and flameproof", for Europe and the USA.
- SIL2 (with order note C20), SIL2/3 (with C23)

Application

SITRANS TF can be used everywhere where temperatures need to be measured under particularly adverse conditions, or where a convenient local display is ideal. Which is why users from all industries have opted for this field device. The rugged enclosure protects the electronics. The stainless steel model is almost completely resistant to sea water and other aggressive substances. The inner workings offer high measuring accuracy, universal input and a wide range of diagnostic options.

Function

Configuration

The communication capability over the HART protocol V 5.9 of the SITRANS TF with an integrated SITRANS TH300 permits parameterization using a PC or HART communicator (hand-held communicator). The SIMATIC PDM makes it easy.

For the SITRANS TF with integrated programmable SITRANS TH200, parameters are assigned with the PC. Available for this purpose are a special modem and the software tool SIPROM T.

Mode of operation

Mode of operation of SITRANS TF as temperature transmitter

The sensor signal, whether resistance thermometer, thermocouple element or Ω or mV signal, is amplified and linearized. Sensor and output side are electrically isolated. An internal cold junction is integrated for measurements with thermocouples.

The device outputs a temperature-linear direct current of 4 to 20 mA. As well as the analog transmission of measured values from 4 to 20 mA, the HART version also supports digital communication for online diagnostics, measured value transmission and configuration.

SITRANS TF automatically detects when a sensor should be interrupted or is indicating a short-circuit. The practical test terminals allow direct measurement of 4 to 20 mA signals over an ammeter without interrupting the output current loop.

Mode of operation of SITRANS TF as field indicator

Any 4 to 20 mA signal can be applied to the generous terminal block. As well as a range of predefined measurement units, the adjustable indicator also supports the input of customized units. This means that any 4 to 20 mA signal can be represented in any unit, e.g. pressure, flow rate, level or temperature.

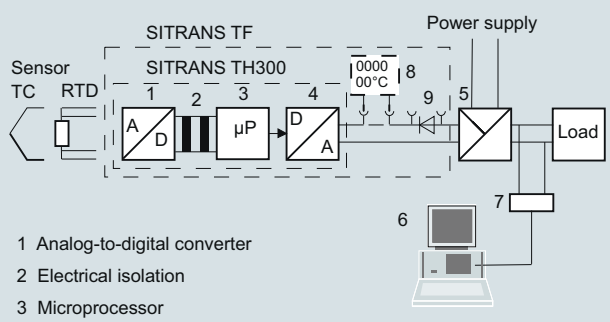

1 Analog-to-digital converter
2 Electrical isolation
3 Microprocessor
4 Digital-to-analog converter
5 Power supply
6 PC/laptop
7 HART modem
8 Digital display (option)
9 Test connector

Mode of operation of SITRANS TF with integrated SITRANS TH300 and digital display

© Siemens 2020

Technical specifications

Input	
Resistance thermometer	
Measured variable	Temperature
Input type	
• According to IEC 60751	Pt25 … Pt1000
• Acc. to JIS C 1604; a=0.00392 K-1	Pt25 … Pt1000
• According to IEC 60751	Ni25 … Ni1000
Units	°C and °F
Connection	
• Standard connection	1 resistance thermometer (RTD) in 2-wire, 3-wire or 4-wire connection
• Averaging	Series or parallel connection of several resistance thermometers in the 2-wire connection for the generation of average temperatures or for adaptation to other device types
• Differentiation	2 resistance thermometers (RTD) in 2-wire connection (RTD 1 – RTD 2 or RTD 2 – RTD 1)
Connection	
• 2-wire connection	Line resistance can be configured ≤100 Ω (loop resistance)
• 3-wire connection	No trim necessary
• 4-wire connection	No trim necessary
Sensor current	≤ 0.45 mA
Response time	≤ 250 ms for 1 sensor with break monitoring
Break monitoring	Always active (cannot be switched off)
Short-circuit monitoring	Can be switched on/off (default value: ON)
Measuring range	Assignable (see "Digital measuring error" table)
Min. measuring span	10 °C (18 °F)
Characteristic curve	Temperature-linear or special characteristic
Resistance-based sensor	
Measured variable	Actual resistance
Sensor type	Resistance-based, potentiometers
Units	Ω
Connection	
• Standard connection	1 resistance-based sensor (R) in 2-wire, 3-wire or 4-wire connection
• Averaging	2 resistance-based sensors in 2-wire connection for averaging
• Differentiation	2 resistance-based sensors in 2-wire connection (R 1 – R 2 or R 2 – R 1)
Connection	
• 2-wire connection	Line resistance can be configured ≤100 Ω (loop resistance)
• 3-wire connection	No trim necessary
• 4-wire connection	No trim necessary
Sensor current	≤ 0.45 mA
Response time	≤ 250 ms for 1 sensor with break monitoring
Break monitoring	Can be switched off
Short-circuit monitoring	Can be switched off (value is adjustable)
Measuring range	Assignable max. 0 ... 2200 Ω (see "Digital measuring error" table)
Min. measuring span	5 ... 25 Ω (see "Digital measuring error" table)
Characteristic curve	Resistance-linear or special characteristic

Thermocouples	
Measured variable	Temperature
Sensor type (thermocouples)	
• Type B	Pt30Rh-Pt6Rh acc. to IEC 584
• Type C	W5%-Re acc. to ASTM 988
• Type D	W3%-Re acc. to ASTM 988
• Type E	NiCr-CuNi acc. to IEC 584
• Type J	Fe-CuNi acc. to IEC 584
• Type K	NiCr-Ni acc. to IEC 584
• Type L	Fe-CuNi acc. to DIN 43710
• Type N	NiCrSi-NiSi acc. to IEC 584
• Type R	Pt13Rh-Pt acc. to IEC 584
• Type S	Pt10Rh-Pt acc. to IEC 584
• Type T	Cu-CuNi acc. to IEC 584
• Type U	Cu-CuNi acc. to DIN 43710
Units	°C or °F
Connection	
• Standard connection	1 thermocouple (TC)
• Averaging	2 thermocouples (TC)
• Differentiation	2 thermocouples (TC) (TC 1 – TC 2 or TC 2 – TC 1)
Response time	≤ 250 ms for 1 sensor with break monitoring
Break monitoring	Can be switched off
Reference junction compensation	
• Internal	With integrated Pt100 resistance thermometer
• External	With external Pt100 IEC 60751 (2-wire or 3-wire connection)
• External fixed	Reference junction temperature can be set as fixed value
Measuring range	Assignable (see "Digital measuring error" table)
Min. measuring span	Min. 40 ... 100 °C (72 ... 180 °F) (see "Digital measuring error" table)
Characteristic curve	Temperature-linear or special characteristic
mV sensor	
Measured variable	DC voltage
Sensor type	DC voltage source (DC voltage source possible over an externally connected resistor)
Units	mV
Response time	≤ 250 ms for 1 sensor with break monitoring
Break monitoring	Can be switched off
Measuring range	-10 ... +70 mV -100 ... +1100 mV
Min. measuring span	2 mV or 20 mV
Overload capability of the input	-1.5 ... +3.5 V DC
Input resistance	≥ 1 MΩ
Characteristic curve	Voltage-linear or special characteristic

© Siemens 2020

SITRANS TF - Transmitter, 2-wire system and SITRANS TF - Field indicator for 4 to 20 mA

Output	
Output signal	4 ... 20 mA, 2-wire
Communication with SITRANS TH300	According to HART Rev. 5.9
Digital display	
Digital display (optional)	In current loop
Display	Max. 5 digits
Digit height	9 mm (0.35")
Display range	-99 999 ... +99 999
Units	Any (max. 5 char.)
Setting: Zero point, full-scale value and unit	Using 3 buttons
Load voltage	2.1 V
Measuring accuracy	
Digital measuring error	See "Digital measuring error" table
Reference conditions	
• Auxiliary power	24 V ± 1 %
• Load	500 Ω
• Ambient temperature	23 °C (73.4 °F)
• Warming-up time	> 5 min
Error in the analog output (digital/analog converter)	< 0.025 % of measuring span
Error due to internal reference junction	< 0.5 °C (0.9 °F)
Effect of ambient temperature	
• Analog measuring error	0.02 % of meas. span/10 °C (18 °F)
• Digital measuring error	
• with resistance thermometers	0.06 °C (0.11 °F)/10°C (18 °F)
• with thermocouples	0.6 °C (1.1 °F)/10°C (18 °F)
Auxiliary power effect	< 0.001 % of meas. span/V
Effect of load impedance	< 0.002 % of meas. span/100 Ω
Long-term drift	
• In the first month	< 0.02 % of measuring span
• After one year	< 0.2 % of measuring span
• After 5 years	< 0.3 % of measuring span
Rated conditions	
Ambient conditions	
Ambient temperature	-40 ... +85 °C (-40 ... +185 °F)
Condensation	Permissible
Electromagnetic compatibility	According to EN 61326 and NAMUR NE21
Degree of protection acc. to EN 60529	IP66/67/68
Design	
Weight	Approx. 1.5 kg (3.3 lb) without options
Dimensions	See "Dimensional drawings"
Enclosure material	Die-cast aluminum, low in copper, GD-AlSi 12 or stainless steel, polyester-based lacquer, stainless steel rating plate
Electrical connection, sensor connection	Screw terminals, cable inlet via M20 x 1.5 or ½-14 NPT screwed gland
Mounting bracket (optional)	Steel, galvanized and chrome-plated or stainless steel
Auxiliary power	
Without digital display	11 ... 35 V DC (30 V with Ex ib; 32 V with Ex ic and Ex nA)
With digital display	13.1 ... 35 V DC (30 V with Ex ib; 32 V with Ex ic and Ex nA)
Galvanic isolation	Between input and output
• Test voltage	U_{eff} = 1 kV, 50 Hz, 1 min

Certificates and approvals	
Explosion protection ATEX	
• "Intrinsic safety" type of protection	With digital display: II 2 (1) G Ex ib [ia Ga] IIC T4 Gb II 2 G Ex ib IIC T4 Gb II 1D Ex ia IIIC T100 °C Da Without digital display: II 2 (1) G Ex ib [ia Ga] IIC T6 Gb II 2 G Ex ib IIC T6 Gb II 1D Ex ia IIIC T100 °C Da
• EC type-examination certificate	ZELM 11 ATEX 0471 X
• "Non-sparking and energy-limited equipment for Zone 2" type of protection	II 3 G Ex ic IIC T6/T4 Gc II 3 G Ex nA IIC T6/T4 Gc II 3 G Ex nA [ic] IIC T6/T4 Gc
• EC type-examination certificate	ZELM 11 ATEX 0471 X
• "Flameproof enclosure" type of protection	II 2 G Ex d IIC T6/T5 Gb II 2 D Ex tb IIIC T100 °C Db
• EC type-examination certificate	ZELM 11 ATEX 0472 X
Explosion protection acc. to FM	Certificate of Compliance 3017742
• Identification (XP, DIP, NI, S)	• XP/I/1/BCD/T5 Ta = 85 °C (185 °F), T6 Ta = 60 °C (140 °F), Type 4X • DIP/II, III/1/EFG/T5 Ta = 85 °C (185 °F), T6 Ta = 60 °C (140 °F), Type 4X • NI/I/2/ABCD/T5 Ta = 85 °C (185 °F), T6 Ta = 60 °C (140 °F), Type 4X • S/II, III/2/FG/T5 Ta = 85 °C (185 °F), T6 Ta = 60 °C (140 °F), Type 4X
Other certificates	IECEx, EAC Ex(GOST), INMETRO, NEPSI, KOSHA
Hardware and software requirements	
• For the SIPROM T parameterization software for SITRANS TF with TH200	
• Personal computer	PC with CD-ROM drive and USB interface
• PC operating system	Windows 98, NT, 2000, XP, 7 and Win 8
• For the SIMATIC PDM parameterization software for SITRANS TH300	See section 8 "Digitalization and communication", "SIMATIC PDM"
Communication	
Load for HART connection	230 ... 1100 Ω
• Two-core shielded	≤ 3.0 km (1.86 mi)
• Multi-core shielded	≤ 1.5 km (0.93 mi)
Protocol	HART protocol, version 5.9

Factory setting of the transmitter:

- Pt100 (IEC 751); 3-wire connection
- Measuring range: 0 ... 100 °C (32 ... 212 °F)
- Fault current: 22.8 mA
- Sensor offset: 0 °C (0 °F)
- Damping 0.0 s

© Siemens 2020

Digital measuring error

Resistance thermometer

Input	Measuring range	Minimum measuring span		Digital accuracy	
	°C (°F)	°C	(°F)	°C	(°F)
According to IEC 60751					
Pt25	-200 ... +850 (-328 ... +1562)	10	(18)	0.3	(0.54)
Pt50	-200 ... +850 (-328 ... +1562)	10	(18)	0.15	(0.27)
Pt100 ... Pt200	-200 ... +850 (-328 ... +1562)	10	(18)	0.1	(0.18)
Pt500	-200 ... +850 (-328 ... +1562)	10	(18)	0.15	(0.27)
Pt1000	-200 ... +350 (-328 ... +662)	10	(18)	0.15	(0.27)
According to JIS C1604-81					
Pt25	-200 ... +649 (-328 ... +1200)	10	(18)	0.3	(0.54)
Pt50	-200 ... +649 (-328 ... +1200)	10	(18)	0.15	(0.27)
Pt100 ... Pt200	-200 ... +649 (-328 ... +1200)	10	(18)	0.1	(0.18)
Pt500	-200 ... +649 (-328 ... +1200)	10	(18)	0.15	(0.27)
Pt1000	-200 ... +350 (-328 ... +662)	10	(18)	0.15	(0.27)
Ni 25 ... Ni1000	-60 ... +250 (-76 ... +482)	10	(18)	0.1	(0.18)

Resistance-based sensor

Input	Measuring range	Minimum measuring span	Digital accuracy
	Ω	Ω	Ω
Resistance	0 ... 390	5	0.05
Resistance	0 ... 2200	25	0.25

Thermocouples

Input	Measuring range	Minimum measuring span		Digital accuracy	
	°C (°F)	°C	(°F)	°C	(°F)
Type B	100 ... 1820 (212 ... 3308)	100	(180)	2 [1]	(3.6) [1]
Type C (W5)	0 ... 2300 (32 ... 4172)	100	(180)	2	3.6
Type D (W3)	0 ... 2300 (32 ... 4172)	100	(180)	1[2]	(1.8)[2]
Type E	-200 ... +1000 (-328 ... +1832)	50	(90)	1	(1.8)
Type J	-200 ... +1200 (-328 ... +2192)	50	(90)	1	(1.8)
Type K	-200 ... +1370 (-328 ... +2498)	50	(90)	1	(1.8)
Type L	-200 ... +900 (-328 ... +1652)	50	(90)	1	(1.8)
Type N	-200 ... +1300 (-328 ... +2372)	50	(90)	1	(1.8)
Type R	-50 ... +1760 (-58 ... +3200)	100	(180)	2	(3.6)
Type S	-50 ... +1760 (-58 ... +3200)	100	(180)	2	(3.6)
Type T	-20 ... +400 (-328 ... +752)	40	(72)	1	(1.8)
Type U	-200 ... +600 (-328 ... +1112)	50	(90)	2	(3.6)

[1] The digital accuracy in the range 100 to 300 °C (212 to 572 °F) is 3 °C (5.4 °F).

[2] The digital accuracy in the range 1750 to 2300 °C (3182 to 4172 °F) is 2 °C (3.6 °F).

mV sensor

Input	Measuring range	Minimum measuring span	Digital accuracy
	mV	mV	µV
mV sensor	-10 ... +70	2	40
mV sensor	-100 ... +1100	20	400

The digital accuracy is the accuracy after the analog/digital conversion including linearization and calculation of the measured value.

An additional error is generated in the output current 4 to 20 mA as a result of the digital/analog conversion of 0.025% of the set measuring span (digital-analog error).

The total error under reference conditions at the analog output is the sum from the digital error and the digital-analog error (poss. with the addition of reference junction errors in the case of thermocouple measurements).

© Siemens 2020

Selection and ordering data

	Article No.
Temperature transmitter in field enclosure ↗ 2-wire system 4 ... 20 mA, with electrical isolation	**7NG313** ■ - ■ ■ ■ ■ ■
↗ Click on the Article No. for the online configuration in the PIA Life Cycle Portal.	
Built-in transmitter	
SITRANS TH200, programmable	
• Without Ex protection	**5 0**
• With Ex ia (ATEX + IECEx)	**5 1**
• With Ex nAL for Zone 2 (ATEX + IECEx)	**5 2**
• Total device SITRANS TF Ex d (ATEX + IECEx)[1]	**5 4**
• Total device SITRANS TF according to FM (XP, DIP, NI, S)[1]	**5 5**
SITRANS TH300, communication-capable according to HART V 5.9	
• Without Ex protection	**6 0**
• With Ex ia (ATEX + IECEx)	**6 1**
• With Ex nAL for Zone 2 (ATEX + IECEx)	**6 2**
• Total device SITRANS TF Ex d (ATEX + IECEx)[1]	**6 4**
• Total device SITRANS TF according to FM (XP, DIP, NI, S)[1]	**6 5**
Enclosure	
Die-cast aluminum	**A**
Stainless steel precision casting	**E**
Connections/cable inlet	
Screwed glands M20x1.5	**B**
½-14 NPT glands	**C**
Digital indicator	
Without	**0**
With	**1**
Mounting bracket and fastening parts	
Without	**0**
Made of steel	**1**
Made of stainless steel	**2**

[1] Without cable gland.

Options	Order code
Append suffix "**-Z**" to article no., add order code and plain text, if applicable.	
Test report (5 measuring points)	**C11**
Functional safety SIL2	**C20**
Functional safety SIL2/3	**C23**
Explosion protection	
• Explosion protection Ex ia according to INMETRO (Brazil) (only for 7NG313.-1...)	**E25**[1]
• Explosion protection Ex d according to INMETRO (Brazil) (only for 7NG313.-4...)	**E26**[1]
• Explosion protection Ex nA according to INMETRO (Brazil) (only for 7NG313.-2...)	**E27**[1]
• Explosion protection Ex i according to NEPSI (China) (only for 7NG313.-1...)	**E55**[1]
• Explosion protection Ex d according to NEPSI (China) (only for 7NG313.-4...)	**E56**[1]
• Explosion protection Ex nA according to NEPSI (China) (only for 7NG313.-2...)	**E57**[1]
• Explosion protection Ex d according to KOSHA (Korea) (only for 7NG313.-4...)	**E70**[1]
• Explosion protection Ex i according to EAC (Russia/Belarus/Kazahstan) (only for 7NG313.-1...)	**E81**[1]
• Explosion protection Ex d according to EAC (Russia/Belarus/Kazahstan) (only for 7NG313.-4...)	**E82**[1]
• Explosion protection Ex nA according to EAC (Russia/Belarus/Kazakhstan) (only for 7NG313.-2...)	**E83**[1]
Marine approvals	
• Det Norske Veritas Germanischer Lloyd (DNV GL)	**D01**
• Bureau Veritas (BV)	**D02**
• Lloyd's Register of Shipping (LR)	**D04**
• American Bureau of Shipping (ABS)	**D05**
Two-layer coating of enclosure and cover (PU on epoxy)	**G10**
Transient protection	**J01**
Cable gland CAPRI ½ NPT ADE 4F, nickel-plated brass (CAPRI 848694 and 810634) included	**D57**
Cable gland ½ NPT ADE 1F, cable diameter 6 ... 12 (CAPRI 818694 and 810534) included	**D58**
Cable gland ½ NPT ADE 4F, Stainless steel (CAPRI 848699 and 810634) included	**D59**
Cable gland ½ NPT ADE 1F, cable diameter 4 ... 8.5 (CAPRI 818674 and 810534) included	**D60**

© Siemens 2020

Options	Order code
Append suffix "**-Z**" to article no., add order code and plain text, if applicable.	
Customer-specific programming	
Measuring range to be set Specify in plain text (max. 5 digits): Y01:... to ... °C, °F	**Y01**[2]
Measuring point number (TAG) max. 8 characters	**Y17**[3]
Measuring point description, max. 16 characters	**Y23**[4]
Measuring point description, max. 32 characters	**Y24**[4]
Labeling of measuring point plate only, specify in plain text: Measuring range	**Y22**[4]
Pt100 (IEC) 2-wire, $R_L = 0\ \Omega$	**U02**[5]
Pt100 (IEC) 3-wire	**U03**[5]
Pt100 (IEC) 4-wire	**U04**[5]
Type B thermocouple	**U20**[5][6]
Type C thermocouple (W5)	**U21**[5][6]
Type D thermocouple (W3) [5][6]	**U22**[5][6]
Type E thermocouple	**U23**[5][6]
Type J thermocouple	**U24**[5][6]
Type K thermocouple	**U25**[5][6]
Type L thermocouple	**U26**[5][6]
Type N thermocouple	**U27**[5][6]
Type R thermocouple	**U28**[5][6]
Type S thermocouple	**U29**[5][6]
Type T thermocouple	**U30**[5][6]
Type U thermocouple	**U31**[5][6]
For TC: Cold junction compensation: external (Pt100, 3-wire)	**U41**
For TC: Reference junction compensation: external with fixed value: specify in plain text	**Y50**
Enter special deviating customer-specific setting in plain text	**Y09**[7]
Fault current 3.6 mA (instead of 22.8 mA)	**U36**[3]

1) 1) Option does not include ATEX/IECEx approval, only country-specific approval.

2) For customer-specific programming for RTD and TC, the start value and the end value of the required measuring span must be specified here. For specification on TAG plate, please select Y22.

3) For this selection, Y01 or Y09 must also be selected. For specification on TAG plate, please select Y23.

4) If only Y22, Y23 or Y24 is ordered and if the labeling is only noted on the measuring point plate, do not specify Y01.

5) For this selection, Y01 must also be selected.

6) Internal reference junction compensation is selected as the default for TC.

7) For customer-specific programming, for example mV and ohm, the start value and the end value of the required measuring span and the unit must be entered here.

Accessories

	Article No.
Additional accessories for assembly, connection and transmitter configuration, see page 2/251.	
Modems	
Modem with USB interface	**7MF4997-1DB**
Modem with USB interface and SIPROM T software	**7NG3092-8KN**
SIMATIC PDM parameterization software Also for SITRANS TH300	**See section 8**
Mounting bracket and fastening parts	
Made of steel for 7NG313.-..B..	**7MF4997-1AC**
Made of steel for 7NG313.-..C..	**7MF4997-1AB**
Made of stainless steel for 7NG313.-..B..	**7MF4997-1AJ**
Made of stainless steel for 7NG313.-..C..	**7MF4997-1AH**
Made of stainless steel 316L for 7NG313.-..B..	**7MF4997-1AQ**
Made of stainless steel 316L for 7NG313.-..C..	**7MF4997-1AP**
Digital display[1]	**7MF4997-1BS**
Connection board	**A5E02226423**

For supply units, see Catalog FI 01 section "Supplementary components".

1) Retrofitting not possible with Ex devices.

Ordering example 1

7NG3135-0AB11-Z Y01+Y23+U03

Y01: -10 ... +100 °C

Y23: TICA1234HEAT

Ordering example 2

7NG3136-0AC11-Z Y01+Y23+Y24+U25

Y01: -10 ... +100 °C

Y23: TICA 1234 ABC

Y24: HEATING BOILER 56789

Factory setting of the transmitter

- Pt100 (IEC 751); 3-wire connection
- Measuring range: 0 ... 100 °C (32 ... 212 °F)
- Fault current 22.8 mA
- Sensor offset: 0 °C (0 °F)
- Damping 0.0 s

© Siemens 2020

SITRANS TF - Transmitter, 2-wire system and SITRANS TF - Field indicator for 4 to 20 mA

	Article No.					
SITRANS TF field indicator ↗ For 4 ... 20 mA signals	**7NG3130 -**	■	■	■	■	■
↗ Click on the Article No. for the online configuration in the PIA Life Cycle Portal.						
Without Ex protection		**0**			**1**	
With Ex ia (ATEX + IECEx)		**1**			**1**	
With Ex nAL for Zone 2 (ATEX + IECEx)		**2**			**1**	
Total device SITRANS TF Ex d (ATEX + IECEx)[1]		**4**			**1**	
Total device SITRANS TF according to FM (XP, DIP, NI, S)[1]		**5**			**1**	
Enclosure						
Die-cast aluminum			**A**			
Stainless steel precision casting			**E**			
Connections/cable inlet						
Screwed glands M20x1.5				**B**		
½-14 NPT glands				**C**		
Digital indicator						
With					**1**	
Mounting bracket and fastening parts						
Without						**0**
Made of steel						**1**
Made of stainless steel						**2**

[1] Without cable gland

Options	Order code
Append suffix "**-Z**" to article no., add order code and plain text, if applicable.	
Test report (5 measuring points)	**C11**
Explosion protection	
• Explosion protection Ex ia according to INMETRO (Brazil) (only for 7NG313.-1...)	**E25**[1]
• Explosion protection Ex d according to INMETRO (Brazil) (only for 7NG313.-4...)	**E26**[1]
• Explosion protection Ex nA according to INMETRO (Brazil) (only for 7NG313.-2...)	**E27**[1]
• Explosion protection Ex i according to NEPSI (China) (only for 7NG313.-1...)	**E55**[1]
• Explosion protection Ex d according to NEPSI (China) (only for 7NG313.-4...)	**E56**[1]
• Explosion protection Ex nA according to NEPSI (China) (only for 7NG313.-2...)	**E57**[1]
• Explosion protection Ex d according to KOSHA (Korea) (only for 7NG313.-4...)	**E70**[1]
• Explosion protection Ex i according to EAC (Russia/Belarus/Kazahstan) (only for 7NG313.-1...)	**E81**[1]
• Explosion protection Ex d according to EAC (Russia/Belarus/Kazahstan) (only for 7NG313.-4...)	**E82**[1]
• Explosion protection Ex nA according to EAC (Russia/Belarus/Kazakhstan) (only for 7NG313.-2...)	**E83**[1]
Marine approvals	
• Det Norske Veritas Germanischer Lloyd (DNV GL)	**D01**
• Bureau Veritas (BV)	**D02**
• Lloyd's Register of Shipping (LR)	**D04**
• American Bureau of Shipping (ABS)	**D05**
Two-layer coating of enclosure and cover (PU on epoxy)	**G10**
Transient protection	**J01**
Cable gland CAPRI ½ NPT ADE 4F, nickel-plated brass (CAPRI 848694 and 810634) included	**D57**
Cable gland ½ NPT ADE 1F, cable diameter 6 ... 12 (CAPRI 818694 and 810534) included	**D58**

Options	Order code
Append suffix "**-Z**" to article no., add order code and plain text, if applicable.	
Cable gland ½ NPT ADE 4F, Stainless steel (CAPRI 848699 and 810634) included	**D59**
Cable gland ½ NPT ADE 1F, cable diameter 4 ... 8.5 (CAPRI 818674 and 810534) included	**D60**
Customer-specific programming	
Measuring range to be set Specify in plain text (max. 5 digits): Y01:... to ... °C, °F	**Y01**[2]
Labeling of measuring point plate only, specify in plain text: Measuring range	**Y22**[3]
Measuring point description, max. 16 characters	**Y23**[3]
Measuring point description, max. 32 characters	**Y24**[3]
Enter special deviating customer-specific setting in plain text	**Y09**[4]

[1] Option does not include ATEX/IECEx approval, only country-specific approval.

[2] For customer-specific programming for RTD and TC, the start value and the end value of the required measuring span must be specified here.

[3] If only Y22, Y23 or Y24 is ordered and if the labeling is only noted on the measuring point plate, do not specify Y01.

[4] For customer-specific programming, for example mV and ohm, the start value and the end value of the required measuring span and the unit must be entered here.

[5] Retrofitting not possible with Ex devices.

Accessories

	Article No.
Additional accessories for assembly, connection and transmitter configuration, see page 2/251.	
Mounting bracket and fastening parts	
Made of steel for 7NG313.-..B..	**7MF4997-1AC**
Made of steel for 7NG313.-..C..	**7MF4997-1AB**
Made of stainless steel for 7NG313.-..B..	**7MF4997-1AJ**
Made of stainless steel for 7NG313.-..C..	**7MF4997-1AH**
Made of stainless steel 316L for 7NG313.-..B..	**7MF4997-1AQ**
Made of stainless steel 316L for 7NG313.-..C..	**7MF4997-1AP**
Digital display[1]	**7MF4997-1BS**
Connection board For supply units, see Catalog FI 01 section "Supplementary components".	**A5E02226423**

Ordering example 1

7NG3130-0AB10-Z Y01+Y23

Y01: -5 ... 100 °C

Y23: TICA1234HEAT

Ordering example 2

7NG3130-0AC11-Z Y01+Y23+Y24

Y01: 0 ... 20 BAR

Y23: PICA 1234 ABC

Y24: HEATING BOILER 67890

Factory setting of the display

4 ... 20 m

© Siemens 2020

Dimensional drawings

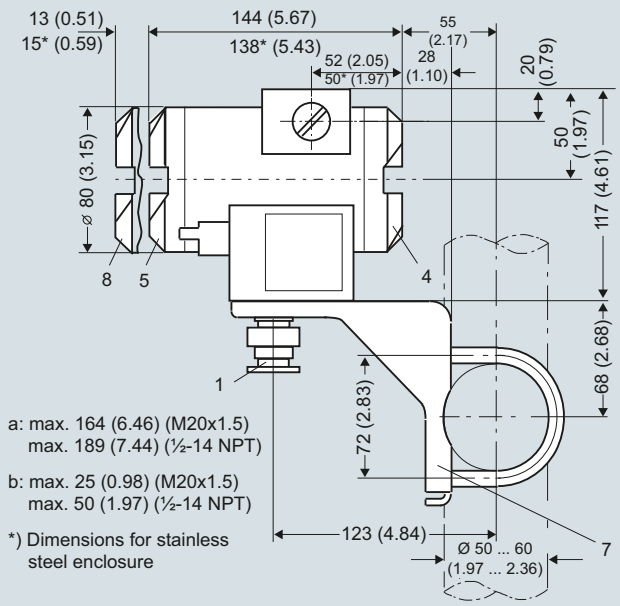

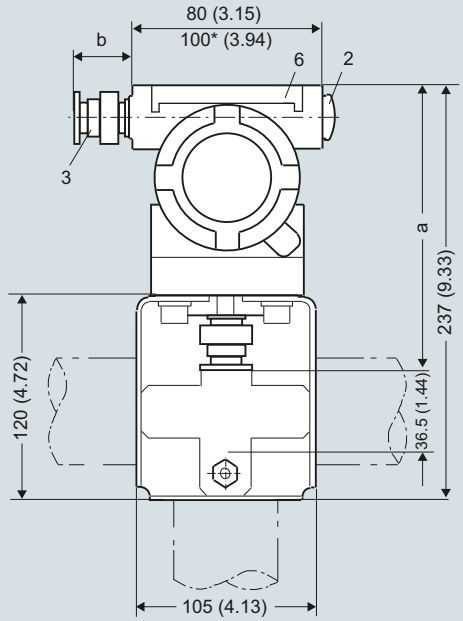

1 Sensor connection (screwed gland M20x1.5 or ½-14 NPT)

2 Blanking plug

3 Electrical connection (screwed gland M20x1.5 or ½-14 NPT)

4 Terminal side, output signal

5 Terminal side, sensor

6 Protective cover (without function)

7 Mounting bracket (option) with clamp for securing to a vertical or horizontal pipe

8 Cover with window for digital display

SITRANS TF, dimensions in mm (inches)

© Siemens 2020

Circuit diagrams

Resistance thermometer

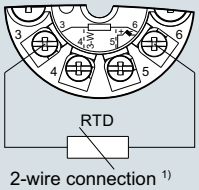

2-wire connection [1)]

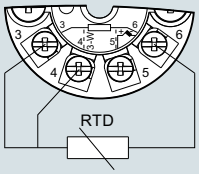

3-wire connection

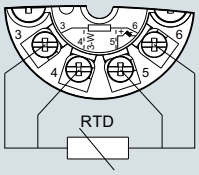

4-wire connection

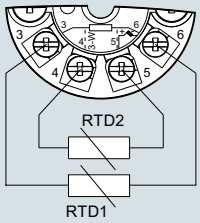

Generation of average value / difference [1)]

Resistance

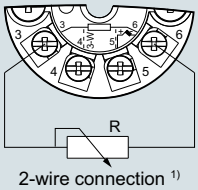

2-wire connection [1)]

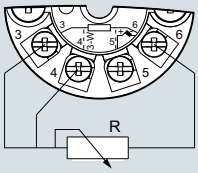

3-wire connection

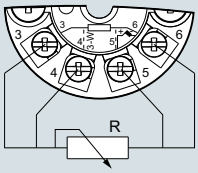

4-wire connection

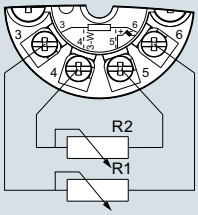

Generation of average value / difference [1)]

Thermocouple

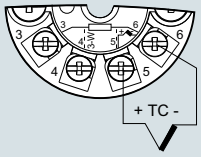

Cold junction compensation
Internal/fixed value

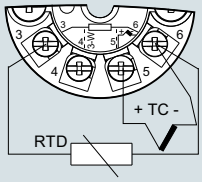

Cold junction compensation with external Pt100 in 2-wire connection [1)]

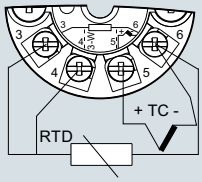

Cold junction compensation with external Pt100 in 3-wire connection

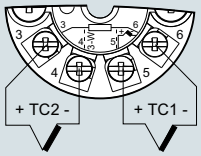

Generation of average value / difference with internal cold junction compensation

[1)] Programmable line resistance for the purpose of correction.

Voltage measurement

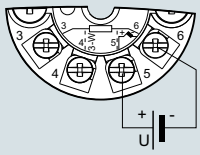

Current measurement

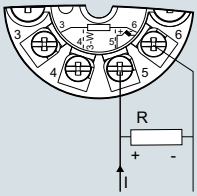

SITRANS TF, sensor connection assignment

© Siemens 2020

Overview

Our field devices for heavy industrial use

- FOUNDATION fieldbus
- PROFIBUS PA

The SITRANS TF temperature transmitter works where others can't cope.

Benefits

- For universal use as a transmitter for resistance thermometers, thermocouple elements, Ω or mV signals
- Rugged two-chamber enclosure in die-cast aluminum or stainless steel
- IP66/67/68 degree of protection
- Can be mounted elsewhere if the measuring point
  - is difficult to access
  - has high temperatures
  - experiences vibrations due to the process cell
  - is to avoid long neck pipes and thermowells
- Can be mounted directly on American-design sensors
- Wide range of approvals for use in potentially explosive atmospheres. "Intrinsically safe, non-sparking and flameproof" type of protection, for Europe and USA

Application

The SITRANS TF can be used everywhere where temperatures need to be measured under particularly harsh conditions. Which is why users from all industries have opted for this field device. The rugged enclosure protects the electronics. The stainless steel model is almost completely resistant to sea water and other aggressive substances. The inner workings offer high measuring accuracy, universal input and a wide range of diagnostic options.

Function

Features

General

- Polarity-neutral bus connection
- 24-bit analog-digital converter for high resolution
- Galvanic isolation
- Version for use in hazardous areas
- Special characteristic
- Sensor redundance

Transmitter with PROFIBUS PA communication

- Function blocks: 2 x analog

Transmitter with FOUNDATION fieldbus communication

- Function blocks: 2 x analog and 1 x PID
- Functionality: Basic or LAS

Mode of operation

The following function diagram explains the mode of operation of the transmitter.

The only difference between the two versions of the SITRANS TF (7NG3137-... and 7NG3138-...) is the type of field bus protocol used (PROFIBUS PA or FOUNDATION fieldbus).

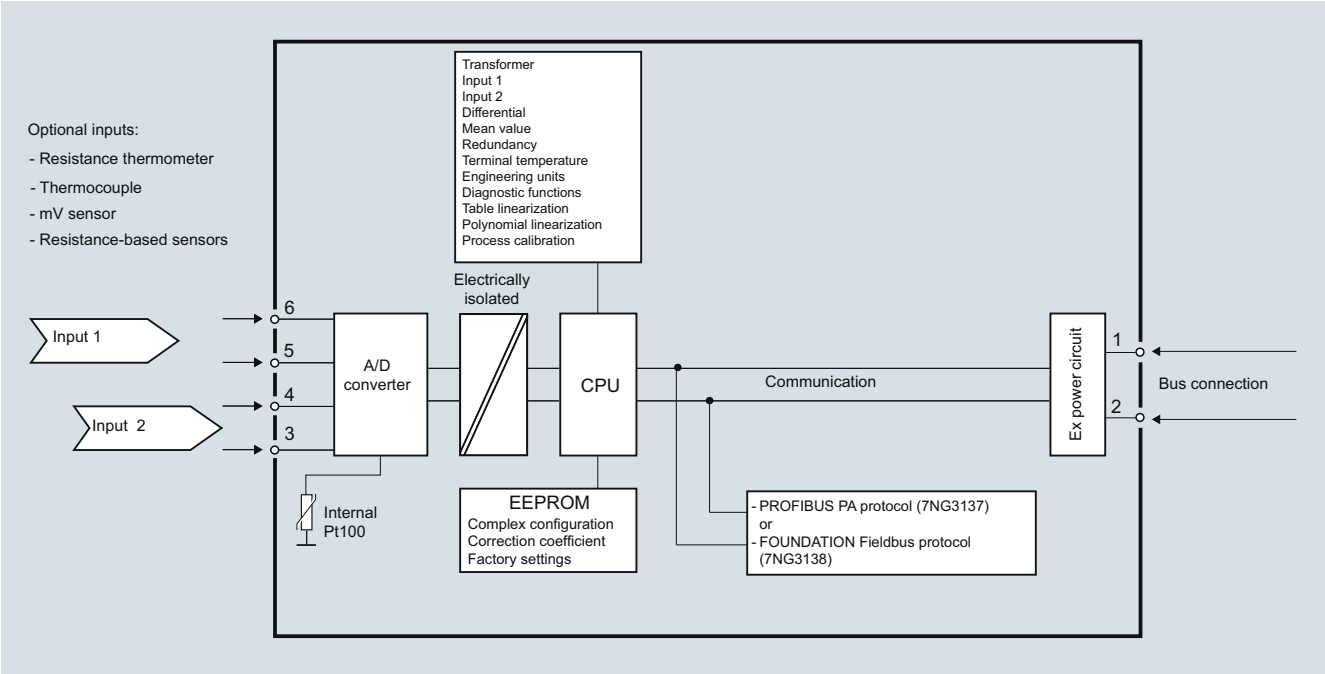

SITRANS TF with TH400, function diagram

© Siemens 2020

System communication

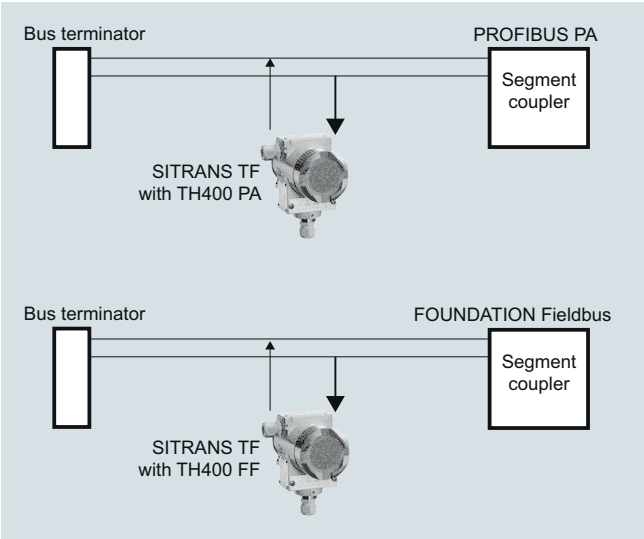

SITRANS TF with TH400, communication interface

Technical specifications

Input	
Analog/digital conversion	
• Measurement rate	< 50 ms
• Resolution	24-bit
Resistance thermometer	
Pt25 ... Pt1000 acc. to IEC 60751/JIS C 1604	
• Measuring range	-200 ... +850 °C (-328 ... +1562 °F)
Ni25 ... Ni1000 acc. to DIN 43760	
• Measuring range	-60 ... +250 °C (-76 ... +482 °F)
Cu10 ... Cu1000, α = 0.00427	
• Measuring range	-50 ... +200 °C (-58 ... +392 °F)
Line resistance per sensor cable	Max. 50 Ω
Sensor current	Nominal 0.2 mA
Sensor fault detection	
• Sensor break detection	Yes
• Sensor short-circuit detection	Yes, < 15 Ω
Resistance-based sensor	
Measuring range	0 ... 10 kΩ
Line resistance per sensor cable	Max. 50 Ω
Sensor current	Nominal 0.2 mA
Sensor fault detection	
• Sensor break detection	Yes
• Sensor short-circuit detection	Yes, < 15 Ω

Thermocouple	
According to IEC 584	Measuring range
• Type B	400 ... 1820 °C (752 ... 3308 °F)
• Type E	-100 ... +1000 °C (-148 ... +1832 °F)
• Type J	-100 ... +1000 °C (-148 ... +1832 °F)
• Type K	-100 ... +1200 °C (-148 ... +2192 °F)
• Type N	-180 ... +1300 °C (-292 ... +2372 °F)
• Type R	-50 ... +1760 °C (-58 ... +3200 °F)
• Type S	-50 ... +1760 °C (-58 ... +3200 °F)
• Type T	-200 ... +400 °C (-328 ... +752 °F)
According to DIN 43710	
• Type L	-200 ... +900 °C (-328 ... +1652 °F)
• Type U	-200 ... +600 °C (-328 ... +1112 °F)
According to ASTM E988-90	
• Type W3	0 ... 2300 °C (32 ... 4172 °F)
• Type W5	0 ... 2300 °C (32 ... 4172 °F)
External reference junction compensation	-40 ... +135 °C (-40 ... +275 °F)
Sensor fault detection	
• Sensor break detection	Yes
• Sensor short-circuit detection	Yes, < 3 mV
• Sensor current in the event of open-circuit monitoring	4 μA
mV sensor - voltage input	
Measuring range	-800 ... +800 mV
Input resistance	10 MΩ
Output	
Filter time (programmable)	0 ... 60 s
Update time	< 400 ms

Measuring accuracy
Accuracy is defined as the higher value of general values and basic values.

General values		
Type of input	Absolute accuracy	Temperature coefficient
All	≤ ± 0.05 % of the measured value	≤ ± 0.002 % of the measured value/°C
Basic values		
Type of input	Basic accuracy	Temperature coefficient
Pt100 and Pt1000	≤ ± 0.1 °C	≤ ± 0.002 °C/°C
Ni100	≤ ± 0.15 °C	≤ ± 0.002 °C/°C
Cu10	≤ ± 1.3 °C	≤ ± 0.02 °C/°C
Resistance-based sensor	≤ ± 0.05 Ω	≤ ± 0.002 Ω/°C
Voltage source	≤ ± 10 μV	≤ ± 0.2 μV/°C
Thermocouple, type: E, J, K, L, N, T, U	≤ ± 0.5 °C	≤ ± 0.01 °C/°C
Thermocouple, type: B, R, S, W3, W5	≤ ± 1 °C	≤ ± 0.025 °C/°C
Reference junction compensation	≤ ± 0.5 °C	
Reference conditions		
Warming-up time	30 s	
Signal-to-noise ratio	Min. 60 dB	

© Siemens 2020

Rated conditions	
Ambient conditions	
Ambient temperature	-40 ... +85 °C (-40 ... +185 °F)
Storage temperature	-40 ... +85 °C (-40 ... +185 °F)
Relative humidity	≤ 98 %, with condensation
Insulation strength	
• Test voltage	500 V AC for 60 s
• Continuous operation	50 V AC/75 V DC
Electromagnetic compatibility	
NAMUR	NE21
EMC 2014/30/EU Emission and Noise Immunity	EN 61326-1, EN 61326-2-5
Design	
Weight	Approx. 1.5 kg (3.3 lb) without options
Dimensions	See "Dimensional drawings"
Enclosure materials	• Die-cast aluminum, low in copper, GD-AlSi 12 or stainless steel • Polyester-based lacquer for GD AlSi 12 enclosure • Stainless steel rating plate
Electrical connection, sensor connection	• Screw terminals • Cable inlet via M20 x 1.5 or ½-14 NPT screwed gland • Bus connection with M12 device plug (optional)
Mounting bracket (optional)	Steel, galvanized and chrome-plated or stainless steel
Degree of protection	IP66/67/68 according to EN 60529
Auxiliary power	
Supply voltage	
• Standard, Ex "d", Ex "nA", Ex "nL", XP, NI	10.0 ... 32 V DC
• Ex "ia", Ex "ib"	10.0 ... 30 V DC
• In FISCO/FNICO installations	10.0 ... 17.5 V DC
Power consumption	< 11 mA
Max. increase in power consumption in the event of a fault	< 7 mA
Certificates and approvals	
Explosion protection ATEX	
EC type-examination certificate	ZELM 11 ATEX 0471 X
• "Intrinsic safety" type of protection (version: 7NG313x-1xxxx)	II 2 (1) G Ex ib [ia Ga] IIC T6 Gb II 2 G Ex ib IIC T6 Gb II 1D Ex ia IIIC T100 °C Da
Conformity statement	ZELM 11 ATEX 0471 X
• "Non-sparking and energy-limited equipment" type of protection (version: 7NG313x-2xxxx)	II 3 G Ex ic IIC T6/T4 Gc II 3 G Ex nA IIC T6/T4 Gc II 3 G Ex nA [ic] IIC T6/T4 Gc
EC type-examination certificate	ZELM 11 ATEX 0472 X
• "Flame-proof enclosure" type of protection (version: 7NG313x-4xxxx)	II 2 G Ex d IIC T6/T5 Gb II 2 D Ex tb IIIC T100 °C Db
Explosion protection: FM for USA	
• FM approval	FM 3017742
• Type of protection XP, DIP, NI and S (version 7NG313x-5xxxx)	• XP / I / 1 / BCD / T5,T6; Type 4X • DIP / II, III / 1 / EFG / T5,T6; Type 4X • NI / I / 2 / ABCD / T5,T6; Type 4X • S / II, III / 2 / FG T5,T6; Type 4X
Other certificates	EAC Ex(GOST), INMETRO, NEPSI, KOSHA

Communication	
Parameterization interface	
• PROFIBUS PA connection	
- Protocol	A&D profile, Version 3.0
- Protocol standard	EN 50170 Volume 2
- Address (for delivery)	126
- Function blocks	2 x analog
• FOUNDATION Fieldbus connection	
- Protocol	FF protocol
- Protocol standard	FF design specifications
- Functionality	Basic or LAS
- Version	ITK 4.6
- Function blocks	2 x analog and 1 x PID
Factory setting	
For SITRANS TH400 PA	
Sensor	Pt100 (IEC)
Type of connection	3-wire connection
Unit	°C
Failure mode	Last valid value
Filter time	0 s
PA address	126
PROFIBUS Ident No.	Manufacturer-specific
For SITRANS TH400 FF	
Sensor	Pt100 (IEC)
Type of connection	3-wire connection
Unit	°C
Failure mode	Last valid value
Filter time	0 s
Node address	22

© Siemens 2020

Selection and ordering data

	Article No.						
Temperature transmitter in field enclosure ↗ With fieldbus communication and electrical isolation	**7NG313**	■	-	■	■	**0**	■
↗ Click on the Article No. for the online configuration in the PIA Life Cycle Portal.							
Built-in transmitter							
SITRANS TH400 with PROFIBUS PA							
• Without Ex protection		**7**	**0**				
• With Ex ia (ATEX)		**7**	**1**				
• With Ex nAL for Zone 2 (ATEX)		**7**	**2**				
• Total device SITRANS TF Ex d (ATEX + IECEx)[1]		**7**	**4**				
• Total device SITRANS TF according to FM (XP, DIP, NI, S)[1]		**7**	**5**				
SITRANS TH400, with FOUNDATION Fieldbus							
• Without Ex protection		**8**	**0**				
• With Ex ia (ATEX)		**8**	**1**				
• With Ex nAL for Zone 2 (ATEX)		**8**	**2**				
• Total device SITRANS TF Ex d (ATEX + IECEx)[1]		**8**	**4**				
• Total device SITRANS TF according to FM (XP, DIP, NI, S)[1]		**8**	**5**				
Enclosure							
Die-cast aluminum				**A**			
Stainless steel precision casting				**E**			
Connections/cable inlet							
Screwed glands M20x1.5					**B**		
½-14 NPT glands					**C**		
Mounting bracket and fastening parts							
Without						**0**	
Made of steel						**1**	
Made of stainless steel						**2**	

[1] Without cable gland

Options	Order code
Append suffix "**-Z**" to article no., add order code and plain text, if applicable.	
Test report (5 measuring points)	**C11**
Bus connection	
• M12 device plug (metal) without mating connector	**M00**[1]
• M12 device plug (metal) with mating connector	**M01**[1]
Explosion protection	
• Explosion protection Ex ia according to INMETRO (Brazil) (only for 7NG313.-1...)	**E25**[2]
• Explosion protection Ex d according to INMETRO (Brazil) (only for 7NG313.-4...)	**E26**[2]
• Explosion protection Ex nA according to INMETRO (Brazil) (only for 7NG313.-2...)	**E27**[2]
• Explosion protection Ex i according to NEPSI (China) (only for 7NG313.-1...)	**E55**[2]
• Explosion protection Ex d according to NEPSI (China) (only for 7NG313.-4...)	**E56**[2]
• Explosion protection Ex nA according to NEPSI (China) (only for 7NG313.-2...)	**E57**[2]
• Explosion protection Ex d according to KOSHA (Korea) (only for 7NG313.-4...)	**E70**[2]
• Explosion protection Ex i according to EAC (Russia/Belarus/Kazahstan) (only for 7NG313.-1...)	**E81**[2]
• Explosion protection Ex d according to EAC (Russia/Belarus/Kazahstan) (only for 7NG313.-4...)	**E82**[2]
• Explosion protection Ex nA according to EAC (Russia/Belarus/Kazakhstan) (only for 7NG313.-2...)	**E83**[2]
Marine approvals	
• Det Norske Veritas Germanischer Lloyd (DNV GL)	**D01**
• Bureau Veritas (BV)	**D02**
• Lloyd's Register of Shipping (LR)	**D04**
• American Bureau of Shipping (ABS)	**D05**
Two-layer coating of enclosure and cover (PU on epoxy)	**G10**
Transient protection	**J01**
Cable gland CAPRI ½ NPT ADE 4F, nickel-plated brass (CAPRI 848694 and 810634) included	**D57**
Cable gland ½ NPT ADE 1F, cable diameter 6 ... 12 (CAPRI 818694 and 810534) included	**D58**
Cable gland ½ NPT ADE 4F, Stainless steel (CAPRI 848699 and 810634) included	**D59**
Cable gland ½ NPT ADE 1F, cable diameter 4 ... 8.5 (CAPRI 818674 and 810534) included	**D60**

© Siemens 2020

Options	Order code
Append suffix "**-Z**" to article no., add order code and plain text, if applicable.	
Customer-specific programming	
Measuring range to be set Specify in plain text (max. 5 digits): Y01:... to ... °C, °F	**Y01**[3]
Measuring point number (TAG) max. 8 characters	**Y15**[4]
Measuring point description, max. 16 characters	**Y23**[4]
Measuring point description, max. 32 characters	**Y24**[5]
Specify bus address in plain text	**Y25**[4]
Pt100 (IEC) 2-wire, $R_L = 0\ \Omega$	**U02**[6]
Pt100 (IEC) 3-wire	**U03**[6]
Pt100 (IEC) 4-wire	**U04**[6]
Type B thermocouple	**U20**[6][7]
Type C thermocouple (W5)	**U21**[6][7]
Type D thermocouple (W3)	**U22**[6][7]
Type E thermocouple	**U23**[6][7]
Type J thermocouple	**U24**[6][7]
Type K thermocouple	**U25**[6][7]
Type L thermocouple	**U26**[6][7]
Type N thermocouple	**U27**[6][7]
Type R thermocouple	**U28**[6][7]
Type S thermocouple	**U29**[6][7]
Type T thermocouple	**U30**[6][7]
Type U thermocouple	**U31**[6][7]
For TC: Cold junction compensation: external (Pt100, 3-wire)	**U41**
For TC: Reference junction compensation: external with fixed value: specify in plain text	**Y50**
Enter special deviating customer-specific setting in plain text	**Y09**[8]

1) Not possible with explosion protection Ex d or XP.
2) Option does not include ATEX/IECEx approval, only country-specific approval. For specification on TAG plate, please select Y22.
3) For customer-specific programming for RTD and TC, the start value and the end value of the required measuring span must be specified here. For specification on TAG plate, please select Y23.
4) If only Y15, Y23 or Y25 is ordered and if the labeling is only noted on the measuring point plate, do not specify Y01.
5) For this selection, Y01 or Y09 must also be selected.
6) For this selection, Y01 must also be selected.
7) Internal reference junction compensation is selected as the default for TC.
8) For customer-specific programming, for example mV and ohm, the start value and the end value of the required measuring span and the unit must be entered here.

Accessories

	Article No.
Additional accessories for assembly, connection and transmitter configuration, see page 2/251.	
SIMATIC PDM parameterization software Also for SITRANS TH300	**See section 8**
Mounting bracket and fastening parts	
Made of steel for 7NG313.-..B..	**7MF4997-1AC**
Made of steel for 7NG313.-..C..	**7MF4997-1AB**
Made of stainless steel for 7NG313.-..B..	**7MF4997-1AJ**
Made of stainless steel for 7NG313.-..C..	**7MF4997-1AH**
Made of stainless steel 316L for 7NG313.-..B..	**7MF4997-1AQ**
Made of stainless steel 316L for 7NG313.-..C..	**7MF4997-1AP**
Connection board	**A5E02226423**

For supply units, see Catalog FI 01 section "Supplementary components".

Ordering example 1

7NG3137-0AB01-Z Y01+Y15+Y25+U03
Y01: -10 ... +100 °C
Y15: TICA1234HEAT
Y25: 33

Ordering example 2

7NG3137-0AC01-Z Y01+Y15+Y25+U25
Y01: -10 ... +100 °C
Y15: TICA 1234 ABC 5678
Y25: 35

Factory setting

For SITRANS TH400 PA:
- Pt100 (IEC); 3-wire connection
- Unit: °C
- Failure mode: Last valid value
- Filter time: 0 s - PA address: 126
- PROFIBUS Ident No.: Manufacturer-specific

For SITRANS TH400 FF:
- Pt100 (IEC); 3-wire connection
- Unit: °C
- Failure mode: Last valid value
- Filter time: 0 s
- Node address: 22

© Siemens 2020

Dimensional drawings

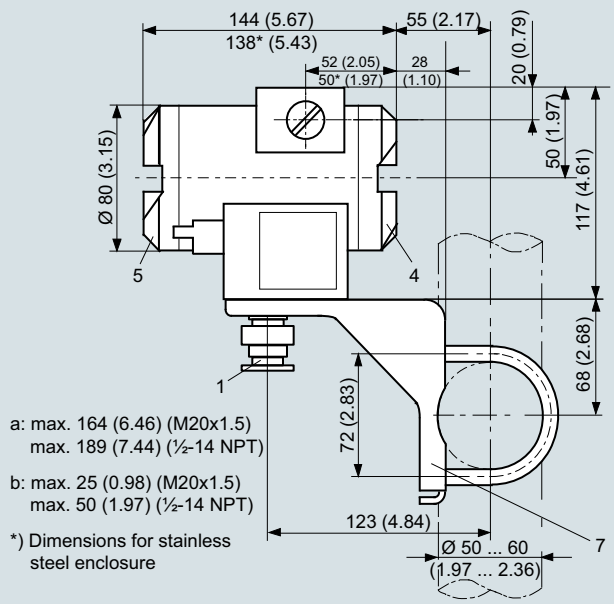

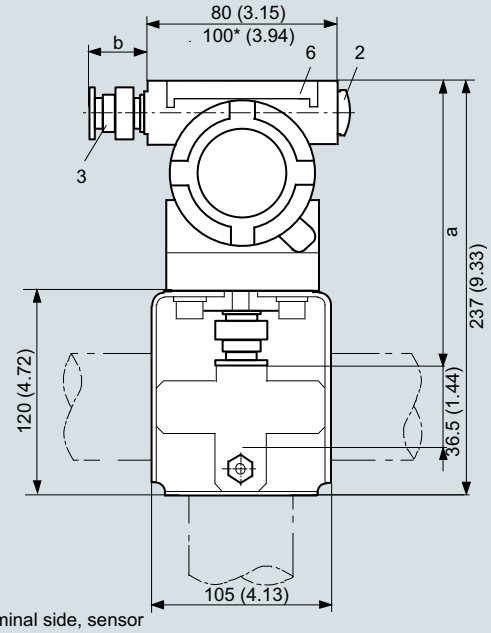

1 Sensor connection (screwed gland M20x1.5 or ½-14 NPT)
2 Blanking plug
3 Electrical connection (screwed plug M20x1.5 orr ½-14 NPT), optional M12 device plug
4 Terminal side, bus connection
5 Terminal side, sensor
6 Protective cover (without function)
7 Mounting bracket (optional) with clamp securing to a vertical or horizontal pipe

SITRANS TF with TH400, dimensions in mm (inches)

© Siemens 2020

Circuit diagrams

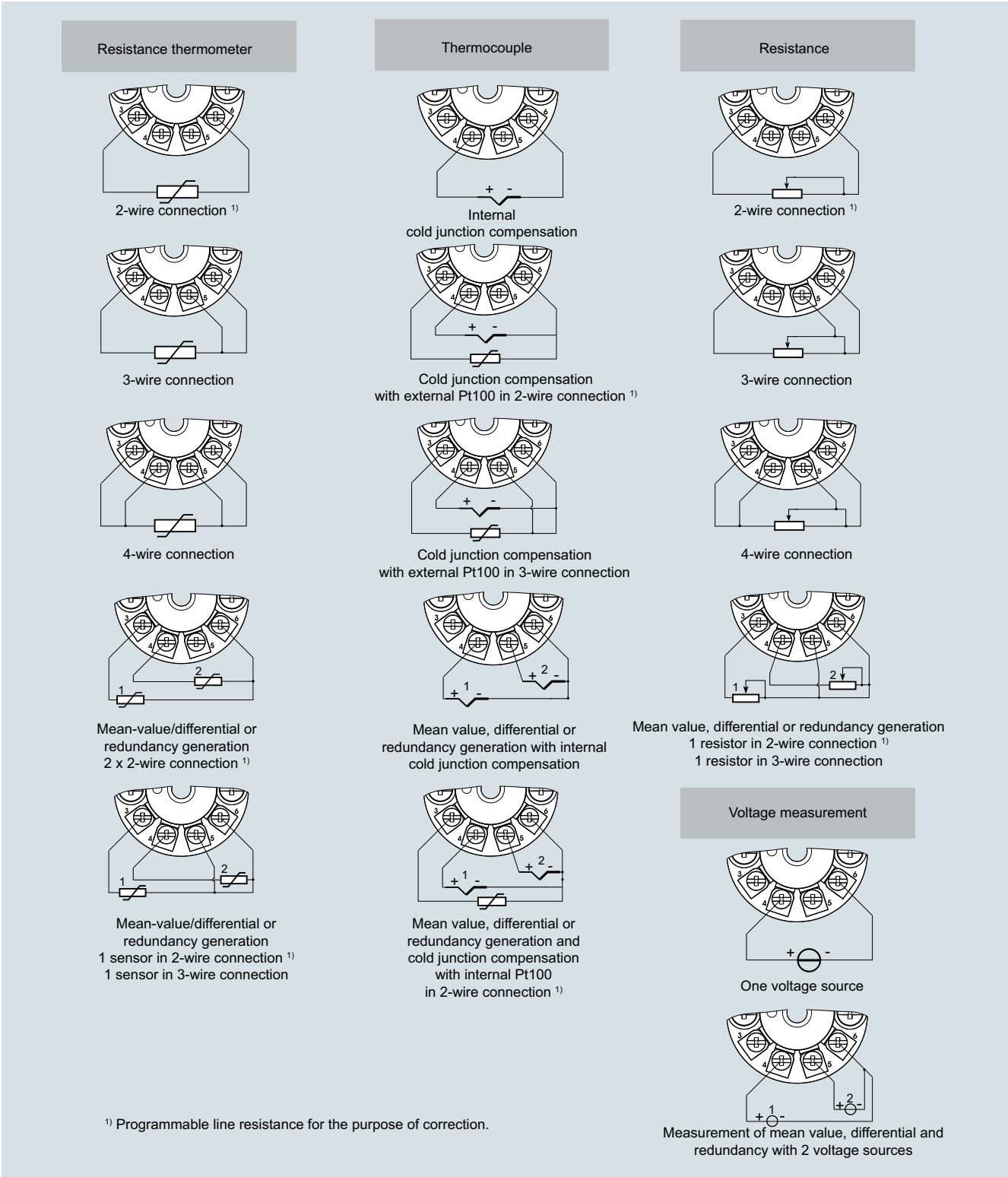

1) Programmable line resistance for the purpose of correction.

SITRANS TF with TH400, sensor connection assignment

© Siemens 2020

SITRANS TF320 (HART, universal)

Overview

SITRANS TF320 in dual chamber enclosure

SITRANS TF320 in single chamber enclosure

- 2-wire temperature transmitter with and without HART communication interface
- Universal input for virtually any type of temperature sensor
- Can be configured via PC, HART 7 or optional local operation

Benefits

- Universally applicable as a temperature transmitter with galvanic isolation for:
  - Resistance thermometer (2-wire, 3-wire, 4-wire connection)
  - Thermocouples
  - Linear resistances, potentiometer and DC voltage sources
- Local operation of the temperature transmitter via display (single chamber enclosure) or control keys accessible from outside (dual chamber enclosure)
- Rugged single or dual chamber enclosure made of die-cast aluminum or stainless steel 316L
- Electronic compartment isolated (watertight) from terminal compartment in dual chamber enclosure
- Degree of protection IP66/67/68 (1.5 m/2 h)
- Electromagnetic compatibility according to DIN EN 61326 and NE21
- Test terminals for direct read-out of the output signal without breaking the current loop
- Remote installation option:
  - Measuring point is difficult to access
  - Measuring point is subjected to high temperatures
  - Measuring point is subjected to vibration through plant
  - Long neck pipes and thermowells must be avoided
- Mounted directly on sensors
- Temperature transmitters of the "intrinsically safe protection type, increased safety for zone 2, flameproof and dust-protected" type of protection can be installed in hazardous areas. The transmitter meets the requirements of the EU Directive 2014/34/EU (ATEX), the FM and CSA regulations as well as other national approvals, e.g. EACEx, NEPSI, KCs, Inmetro.
- SIL2/3 (with order note C20)

Application

SITRANS TF320 can be used everywhere where temperatures need to be measured under particularly adverse conditions and where a user-friendly local display is ideal. Which is why users from all industries have opted for this field device. The rugged enclosure protects the electronics. The stainless steel model is almost completely resistant to sea water and other aggressive substances. The inner workings offer high measuring accuracy, universal input and a wide range of diagnostic options.

© Siemens 2020

Function

Configuration

The communication capability over the HART protocol V 7 permits parameterization using a PC or HART communicator (handheld communicator). The SIMATIC PDM makes it easy.

For the SITRANS TF320 without HART functionality, parameters are assigned with the PC. A special modem and the software tool SIPROM T are available for this purpose.

The optional local operation on the device gives you the possibility to configure the device's most important functions very quickly.

Principle of operation

SITRANS TF320 as temperature transmitter

The input signal, whether resistance thermometer (RTD), thermocouple (TC), Ω or mV signal, is amplified and linearized. Input and output side are galvanically isolated. An internal cold junction is integrated for measurements with thermocouples.

The device outputs a temperature-linear direct current from 4 to 20 mA. As well as the analog transmission of measured values from 4 to 20 mA, the HART version also supports digital communication for online diagnostics, measured value transmission, and configuration.

SITRANS TF320 automatically detects when a sensor should be interrupted or is indicating a short-circuit. The practical test terminals allow direct measurement of 4 to 20 mA signals over an ammeter without interrupting the output current loop.

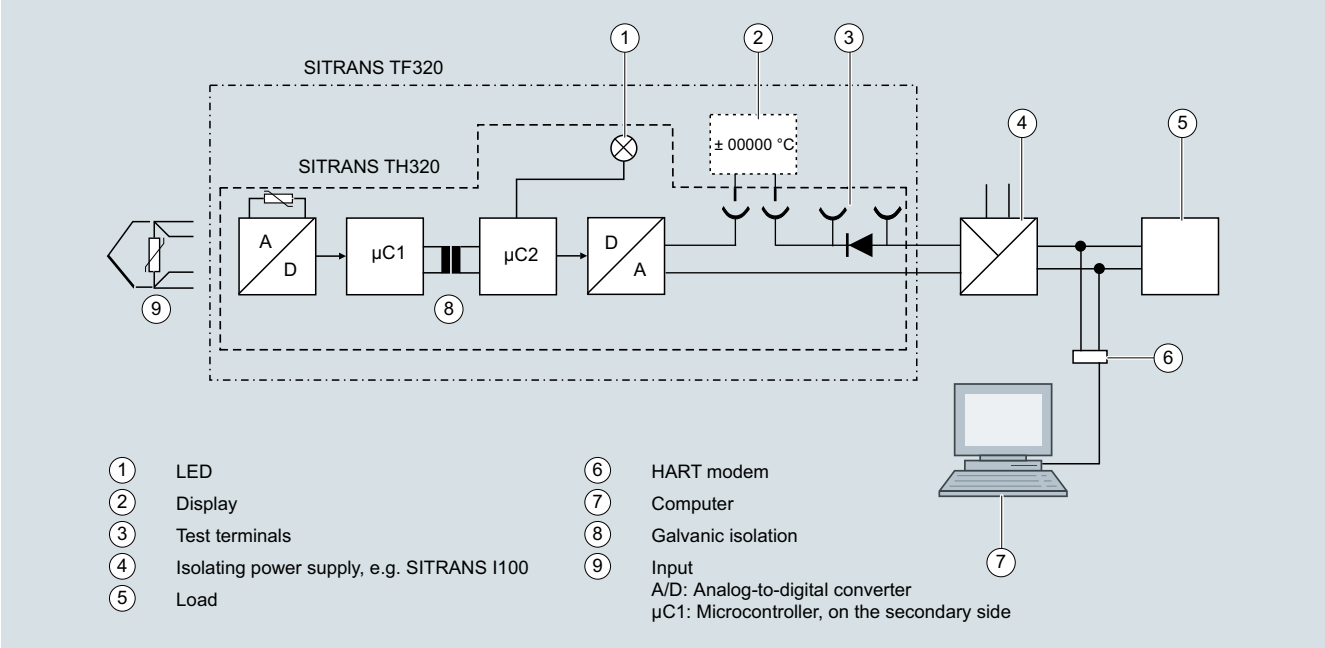

Function block diagram SITRANS TF320 with integrated SITRANS TH320

© Siemens 2020

Technical specifications

General	
Supply voltage[1) 2)]	
• Without explosion protection (non-Ex)	10.5 ... 48 V DC
• with explosion protection (Ex i)	10.5 ... 30 V DC
Additional minimum supply voltage when using test terminals	0.8 V
Maximum power loss	≤ 850 mW
Minimum load resistance at supply voltage > 37 V	(V_{supply} - 37 V)/23 mA
Insulation voltage, test/operation	
• Without explosion protection (non-Ex)	2.5 kV AC/55 V AC
• with explosion protection (Ex i)	2.5 kV AC/42 V AC
Polarity protection	All inputs and outputs
Write protection	Wire jumper (transmitter), switch (on display) or software
Warm-up time	< 5 min
Starting time	< 2.75 s
Programming	SIPROM T and HART
Signal-to-noise ratio	> 60 dB
Long-term stability	Better than: • ± 0.05% of measuring span/year • ± 0.18% of measuring span/5 years
Response time	4 ... 20 mA: ≤ 55 ms HART: ≤ 75 ms (typically 70 ms)
Programmable damping	0 ... 60 s
Signal dynamic	
• Input	24 bit
• Output	18 bit
Influence of change in supply voltage	< 0.005% of measuring span/V DC
Input	
Resistance thermometer (RTD)	
Input type	
• Pt10 ... 10000	• IEC 60751 • JIS C 1604-8 • GOST 6651_2009 • Callendar-Van Dusen
• Ni10 ... 10000	• DIN 43760-1987 • GOST 6651-2009/OIML R84:2003
• Cu5 ... 1000	• Edison Copper Winding No. 15 • GOST 6651-2009/OIML R84:2003
Type of connection	2-wire, 3-wire or 4-wire
Line resistance per wire	Max. 50 Ω
Input current	< 0.15 mA
Effect of the line resistance (with 3-wire and 4-wire connections)	< 0.002 Ω/Ω
Cable, wire-wire capacity	
• Pt1000, Pt10000 (IEC 60751 and JIS C 1604-8)	Max. 30 nF
• All other input types	Max. 50 nF
Fault detection, programmable	None, short-circuited, defective, short-circuited or defective **Note** When the low limit for the configured input type is below the constant detection limit for short-circuited inputs, the detection of short circuits is disabled regardless of the configuration of the fault detection.
Detection limit for short-circuited input	15 Ω
Fault detection time (RTD)	≤ 75 ms (typically 70 ms)
Fault detection time (for 3-wire and 4-wire)	≤ 2 000 ms
Thermocouples (TC)	
Input type	
• B	IEC 60584-1
• E	IEC 60584-1
• J	IEC 60584-1
• K	IEC 60584-1
• L	DIN 43710
• Lr	GOST 3044-84
• N	IEC 60584-1
• R	IEC 60584-1
• S	IEC 60584-1
• T	IEC 60584-1
• U	DIN 43710
• W3	ASTM E988-96
• W5	ASTM E988-96
• LR	GOST 3044-84
Cold junction compensation (CJC)	Constant, internal or external over Pt100 or Ni100 RTD
• Temperature range internal CJC	-50 ... +100 °C (-58 ... +212 °F)
• Connection external CJC	2-wire or 3-wire
• External CJC, line resistance per wire (for 3-wire and 4-wire connections)	50 Ω
• Effect of the line resistance (with 3-wire and 4-wire connections)	< 0.002 Ω/Ω
• Input current external CJC	< 0.15 mA
• Temperature range external CJC	-50 ... +135 °C (-58 ... +275 °F)
• Cable, wire-wire capacity	Max. 50 nF
• Total line resistance	Max. 10 kΩ
• Fault detection, programmable	None, short-circuited, defective, short-circuited or defective **Note** The short-circuited fault detection only applies to the CJC input.
• Fault detection time (TC)	≤ 75 ms (typically 70 ms)
• Fault detection time, external CJC (for 3-wire and 4-wire)	≤ 2 000 ms
Linear resistance	
Input range	0 ... 100 kΩ
Minimum measuring span	25 Ω
Type of connection	2-wire, 3-wire or 4-wire
Line resistance per wire	Max. 50 Ω
Input current	< 0.15 mA
Effect of the line resistance (with 3-wire and 4-wire connections)	< 0.002 Ω/Ω
Cable, wire-wire capacity	
• R > 400 Ω	Max. 30 nF
• R ≤ 400 Ω	Max. 50 nF
Fault detection, programmable	None, defective

© Siemens 2020

Potentiometers	
Input range	10 Ω ... 100 kΩ
Minimum measuring span	25 Ω
Type of connection	2-wire, 3-wire or 4-wire
Line resistance per wire	Max. 50 Ω
Input current	< 0.15 mA
Effect of the line resistance (with 4-wire and 5-wire connections)	< 0.002 Ω/Ω
Cable, wire-wire capacity	
• R > 400 Ω	Max. 30 nF
• R ≤ 400 Ω	Max. 50 nF
Fault detection, programmable	None, short-circuited, defective, short-circuited or defective
	Note
	When the configured potentiometer size is below the constant detection limit for short-circuited inputs, the detection of short circuits is disabled regardless of the configuration of the fault detection.
Detection limit for short-circuited input	15 Ω
Fault detection time, wiper arm (no short-circuit detection)	≤ 75 ms (typically 70 ms)
Fault detection time, element	≤ 2 000 ms
Fault detection time (for 4-wire and 5-wire)	≤ 2 000 ms
Supply voltage	
Measuring range	
• Unipolar	-100 ... 1700 mV
• Bipolar	-800 ... +800 mV
Minimum measuring span	2.5 mV
Input resistance	10 MΩ
Cable, wire-wire capacity	
• Input range: -100 ... 1700 mV	Max. 30 nF
• Input range: -20 ... 100 mV	Max. 50 nF
Fault detection, programmable	None, defective
Fault detection time	≤ 75 ms (typically 70 ms)
Output and HART communication	
Normal range, programmable	3.8 ... 20.5 mA/20.5 ... 3.8 mA
Extended range (output limits), programmable	3.5 ... 23 mA/23 ... 3.5 mA
Programmable input/output limits	
• Fault current	Enable/disable
• Fault current setting	3.5 ... 23 mA
Update time	10 ms
Load (with current output)	≤ (V_{Supply} - 10.5)/0.023 Ω
Load stability	< 0.01% of measuring span/100 Ω (measuring span = currently selected range)
Input fault detection, programmable (detection of input short circuits is ignored with TC and voltage inputs)	3.5 ... 23 mA
NAMUR NE43 Upscale	> 21 mA
NAMUR NE43 Downscale	< 3.6 mA
HART protocol versions	HART 7
Measuring accuracy	
Input accuracy	See "Input accuracy" table
Output accuracy	See "Output accuracy" table

Rated conditions	
Ambient temperature	
• Without local operation in single chamber enclosure	-50 ... +85 °C (-58 ... +185 °F)
• With local operation	-40 ... +85 °C (-40 ... +185 °F)
• For transmitters with functional safety	-40 ... +80 °C (-40 ... +176 °F)
Storage temperature	-50 ... +85 °C (-58 ... +185 °F)
Reference temperature for sensor calibration	24 °C ±1.0 °C (75.2 °F ±1.8 °F)
Relative humidity	< 99% (no condensation)
Degree of protection	
• Temperature transmitter enclosure	IP66/IP67/IP68
• Terminals	IP00
Mechanical construction	
Weight	
• Single chamber enclosure	0.85 kg (1.87 lb)
• Dual chamber enclosure	• Aluminum: 1.3 kg (2.87 lb) • Stainless steel: 3.3 kg (7.28 lb)
Maximum core cross-section	
• Single chamber enclosure	1.5 mm² (AWG 16)
• Dual chamber enclosure	2.5 mm² (AWG 14)
Tightening torque for clamping screws	0.5 ... 0.6 Nm
Vibrations	IEC 60068-2-6
• 2 ... 25 Hz	± 1.6 mm (0.07 inch)
• 25 ... 100 Hz	± 4 g
Certificates and approvals	
Explosion protection ATEX/IECEx and others	
Certificates[3)]	IECEx DEK 19.0069X DEKRA 19ATEX0106 X (Category 1) DEKRA 19ATEX0107 X (Category 3)
"Intrinsic safety ia/ib" type of protection	For use in Zone 0, 1, 2
• ATEX	II 1 G Ex ia IIC T6 ... T4 Ga II 2(1) G Ex ib [ia Ga] IIC T6 ... T4 Gb
• IECEx and others	Ex ia IIC T6 ... T4 Ga Ex ib [ia Ga] IIC T6 ... T4 Gb
• EACEx	Ex ia IIC T6 ... T4 Ga Ex ib [ia Ga] IIC T6 ... T4 Gb
"Intrinsic safety ic" type of protection	For use in Zones 2
• ATEX	II 2 G Ex ic IIC T6…T4 Gc
• IECEx and others	Ex ic IIC T6 ... T4 Gc
• EACEx	2Ex ic IIC T6…T4 Gc X
"Non-sparking/increased safety nA/ec" type of protection	For use in Zones 2
• ATEX	II 2 G Ex nA IIC T6…T4 Gc II 2 G Ex ec IIC T6…T4 Gc
• IECEx and others	Ex nA IIC T6 ... T4 Gc Ex ec IIC T6 ... T4 Gc
• EACEx	2Ex nA IIC T6…T4 Gc
• "Flameproof enclosure db" type of protection	For use in Zone 1
• ATEX	II 2 G Ex db IIC T6…T4 Gb
• IECEx and others	Ex db IIC T6 ... T4 Gb
• EACEx	1Ex d IIC T6…T4 Gb X
• "Protection by enclosure tb" type of protection	For use in Zone 21
• ATEX	II 2 D Ex tb IIC T100°C Db
• IECEx and others	Ex tb IIC T100°C Db
• EACEx	Ex tb IIC T100°C Db X

© Siemens 2020

Explosion protection CSA/FM for Canada and USA	
Certificates	FMxxCAxxxx FMxxUSxxxx
"Intrinsic safety ia" type of protection	IS, CL I, Div 1, GP ABCD, T6 ... T4 Ex ia IIC T6 … T4 Ga AEx ia IIC T6 … T4 Ga or: Ex ib [ia Ga] IIC T6…T4 Gb AEx ib [ia Ga] IIC T6…T4 Gb
"Non incendive field wiring NIFW" type of protection	NIFW, CL I, Div 2, GP ABCD T6 ... T4
"Non incendive NI" type of protection	NI, CL I, Div 2, GP ABCD T6...T4 Ex nA IIC T6 ... T4 Gc AEx nA IIC T6 ... T4 Gc
"Explosion-proof XP" type of protection	XP/ CL I / DIV1 / GP ABCD / T6....T4 CL I / Zn1 / AEx/Ex d IIC T6...T4 Gb
"Dust-protected DIP" type of protection	DIP/ CL II, III / DIV 1 / GP EFG / T6...T4 Zn21 / AEx/Ex tb IIIC T100°C Gb

1) Note that the minimum supply voltage must correspond to the value measured at the terminals of the SITRANS TF320.
All external voltage drops must be taken into consideration.

2) Protect the device from overvoltage with the help of a suitable power supply or suitable overvoltage protection equipment.

3) Additional available certificates are listed on the Internet at http://www.siemens.com/processinstrumentation/certificates

Measuring ranges/Minimum measuring span

RTD

Input type	Standard	Measuring range in °C (°F)	α_0 in °C^{-1} (°F^{-1})	Minimum measuring span in °C (°F)
Pt10 ... 10000	IEC 60751	-200 ... +850 (-328 ... +1 562)	0.003851 (0.002139)	10 (50)
	JIS C 1604-8	-200 ... +649 (-328 ... +1 200)	0.003916 (0.002176)	10 (50)
	GOST 6651_2009	-200 ... +850 (-328 ... +1 562)	0.003910 (0.002172)	10 (50)
	Callendar-Van Dusen	-200 ... +850 (-328 ... +1 562)	-	10 (50)
Ni10 ... 10000	DIN 43760-1987	-60 ... +250 (-76 ... +482)	0.006180 (0.003433)	10 (50)
	GOST 6651-2009/OIML R84:2003	-60 ... +180 (-76 ... +356)	0.006170 (0.003428)	10 (50)
Cu5 ... 1000	Edison Copper Winding No. 15	-200 ... +260 (-328 ... +500)	0.004270 (0.002372)	100 (212)
	GOST 6651-2009/OIML R84:2003	-180 ... +200 (-292 ... +392)	0.004280 (0.002378)	100 (212)
	GOST 6651-94	-50 ... +200 (-58 ... +392)	0.004260 (0.002367)	100 (212)

TC

Input type	Standard	Measuring range in °C (°F)	Minimum measuring span in °C (°F)
B	IEC 60584-1	0 (85) ... 1 820 (32 (185) ... 3 308)	100 (212)
E	IEC 60584-1	-200 ... +1 000 (-392 ... +1 832)	50 (122)
J	IEC 60584-1	-100 ... +1 200 (-212 ... +2 192)	50 (122)
K	IEC 60584-1	-180 ... +1 372 (-356 ... +2 502)	50 (122)
L	DIN 43710	-200 ... +900 (-392 ... +1 652)	50 (122)
Lr	GOST 3044-84	-200 ... +800 (-392 ... +1 472)	50 (122)
N	IEC 60584-1	-180 ... +1 300 (-356 ... +2 372)	50 (122)
R	IEC 60584-1	-50 ... +1 760 (-122 ... +3 200)	100 (212)
S	IEC 60584-1	-50 ... +1 760 (-122 ... +3 200)	100 (212)
T	IEC 60584-1	-200 ... +400 (-392 ... +752)	50 (122)
U	DIN 43710	-200 ... +600 (-392 ... +1 112)	50 (122)
W3	ASTM E988-96	0 ... 2 300 (32 ... 4 172)	100 (212)
W5	ASTM E988-96	0 ... 2 300 (32 ... 4 172)	100 (212)
LR	GOST 3044-84	-200 ... +800 (-392 ... +1472)	50 (122)

© Siemens 2020

Input accuracy

Basic values

Input type	Basic accuracy	Temperature coefficient[1)]
RTD		
Pt10	≤ ±0.8 °C (1.44 °F)	≤ ±0.020 °C/°C (°F/°F)
Pt20	≤ ±0.4 °C (0.72 °F)	≤ ±0.010 °C/°C (°F/°F)
Pt50	≤ ±0.16 °C (0.288 °F)	≤ ±0.004 °C/°C (°F/°F)
Pt100	≤ ±0.04 °C (0.072 °F)	≤ ±0.002 °C/°C (°F/°F)
Pt200	≤ ±0.08 °C (0.144 °F)	≤ ±0.002 °C/°C (°F/°F)
Pt500	$T_{max.}$ < 180 °C (356 °F) = ≤ ±0.08 °C (0.144 °F) $T_{max.}$ > 180 °C (356 °F) = ≤ ±0.16 °C (0.288 °F)	≤ ±0.002 °C/°C (°F/°F)
Pt1000	≤ ±0.08 °C (0.144 °F)	≤ ±0.002 °C/°C (°F/°F)
Pt2000	$T_{max.}$ < 300 °C (572 °F) = ≤ ±0.08 °C (0.144 °F) $T_{max.}$ > 300 °C (572 °F) = ≤ ±0.4 °C (0.72 °F)	≤ ±0.002 °C/°C (°F/°F)
Pt10000	≤ ±0.16 °C (0.288 °F)	≤ ±0.002 °C/°C (°F/°F)
Pt x	Largest tolerance of neighboring points	Largest temperature coefficient of neighboring points
Ni10	≤ ±1.6 °C (2.88 °F)	≤ ±0.020 °C/°C (°F/°F)
Ni20	≤ ±0.8 °C (1.44 °F)	≤ ±0.010 °C/°C (°F/°F)
Ni50	≤ ±0.32 °C (0.576 °F)	≤ ±0.004 °C/°C (°F/°F)
Ni100	≤ ±0.16 °C (0.288 °F)	≤ ±0.002 °C/°C (°F/°F)
Ni120	≤ ±0.16 °C (0.288 °F)	≤ ±0.002 °C/°C (°F/°F)
Ni200	≤ ±0.16 °C (0.288 °F)	≤ ±0.002 °C/°C (°F/°F)
Ni500	≤ ±0.16 °C (0.288 °F)	≤ ±0.002 °C/°C (°F/°F)
Ni1000	≤ ±0.16 °C (0.288 °F)	≤ ±0.002 °C/°C (°F/°F)
Ni2000	≤ ±0.16 °C (0.288 °F)	≤ ±0.002 °C/°C (°F/°F)
Ni10000	≤ ±0.32 °C (0.576 °F)	≤ ±0.002 °C/°C (°F/°F)
Ni x	Largest tolerance of neighboring points	Largest temperature coefficient of neighboring points
Cu5	≤ ±1.6 °C (2.88 °F)	≤ ±0.040 °C/°C (°F/°F)
Cu10	≤ ±0.8 °C (1.44 °F)	≤ ±0.020 °C/°C (°F/°F)
Cu20	≤ ±0.4 °C (0.72 °F)	≤ ±0.010 °C/°C (°F/°F)
Cu50	≤ ±0.16 °C (0.288 °F)	≤ ±0.004 °C/°C (°F/°F)
Cu100	≤ ±0.08 °C (0.144 °F)	≤ ±0.002 °C/°C (°F/°F)
Cu200	≤ ±0.08 °C (0.144 °F)	≤ ±0.002 °C/°C (°F/°F)
Cu500	≤ ±0.16 °C (0.288 °F)	≤ ±0.002 °C/°C (°F/°F)
Cu1000	≤ ±0.08 °C (0.144 °F)	≤ ±0.002 °C/°C (°F/°F)
Cu x	Largest tolerance of neighboring points	Largest temperature coefficient of neighboring points
Linear resistance		
0 ... 400 Ω	≤ ±40 mΩ	≤ ±2 mΩ/°C (1.11 mΩ/°F)
0 ... 100 kΩ	≤ ±4 Ω	≤ ±0.2 Ω/°C (0.11 Ω/°F)
Potentiometers		
0 ... 100%	< 0.05%	< ± 0.005%
Supply voltage		
mV: -20 ... 100 mV	≤ ±5 µV	≤ ±0.2 µV/°C (0.11 µV/°F)
mV: -100 ... 1700 mV	≤ ±0.1 mV	≤ ±36 µV/°C (20 µV/°F)
mV: ± 800 mV	≤ ±0.1 mV	≤ ±32 µV/°C (17.8 µV/°F)
TC		
E	≤ ±0.2 °C (0.36 °F)	≤ ±0.025 °C/°C (°F/°F)
J	≤ ±0.25 °C (0.45 °F)	≤ ±0.025 °C/°C (°F/°F)
K	≤ ±0.25 °C (0.45 °F)	≤ ±0.025 °C/°C (°F/°F)
L	≤ ±0.35 °C (0.63 °F)	≤ ±0.025 °C/°C (°F/°F)
N	≤ ±0.4 °C (0.72 °F)	≤ ±0.025 °C/°C (°F/°F)
T	≤ ±0.25 °C (0.45 °F)	≤ ±0.025 °C/°C (°F/°F)
U	< 0 °C (32 °F) ≤ ±0.8 °C (1.44 °F) ≥ 0 °C (32 °F) ≤ ±0.4 °C (0.72 °F)	≤ ±0.025 °C/°C (°F/°F)
Lr	≤ ±0.2 °C (0.36 °F)	≤ ±0.1 °C/°C (°F/°F)
R	< 200 °C (392 °F) ≤ ±0.5 °C (0.9 °F) ≥ 200 °C (392 °F) ≤ ±1 °C (1.8 °F)	≤ ±0.1 °C/°C (°F/°F)
S	< 200 °C (392 °F) ≤ ±0.5 °C (0.9 °F) ≥ 200 °C (392 °F) ≤ ±1 °C (1.8 °F)	≤ ±0.1 °C/°C (°F/°F)

© Siemens 2020

SITRANS TF320 (HART, universal)

Input type	Basic accuracy	Temperature coefficient[1]
W3	≤ ±0.6 °C (1.08 °F)	≤ ±0.1 °C/°C (°F/°F)
W5	≤ ±0.4 °C (0.72 °F)	≤ ±0.1 °C/°C (°F/°F)
B[2]	≤ ±1 °C (1.8 °F)	≤ ±0.1 °C/°C (°F/°F)
B[3]	≤ ±3 °C (5.4 °F)	≤ ±0.1 °C/°C (°F/°F)
B[4]	≤ ±8 °C (14.4 °F)	≤ ±0.8 °C/°C (°F/°F)
B[5]	Not specified	Not specified
CJC (internal)	< ±0.5 °C (0.9 °F)	Included in basic accuracy
CJC (external)	≤ ±0.08 °C (0.144 °F)	≤ ±0.002 °C/°C (°F/°F)

1) Temperature coefficients correspond to the specified values or 0.002% of the input span, depending on which value is greater.
2) Accuracy of the specification range > 400 °C (752 °F)
3) Accuracy of the specification range > 160 °C (320 °F) < 400 °C (752 °F)
4) Accuracy of the specification range > 85 °C (185 °F) < 160 °C (320 °F)
5) Accuracy of the specification range < 85 °C (185 °F)

Output accuracy

Output type	Basic accuracy	Temperature coefficient
Analog output	≤ ±1.6 µA (0.01% of the full output span)	≤ ±0.48 µA/K (≤ ±0.003% of the full output span/K)

© Siemens 2020

Selection and ordering data

Single chamber enclosure

	Article No.
SITRANS TF320 Temperature transmitter with single chamber enclosure for wall or pipe mounting, one configurable input and a galvanically isolated 2-wire output. ↗	**7NG034** ■ - ■■■■■ - 0 ■■■
↗ Click on the Article No. for the online configuration in the PIA Life Cycle Portal.	
Communication	
With HART (4 ... 20 mA)	**0**
Without HART (4 ... 20 mA)	**7**
Primary value output	
Input 1	**0**
Input 1, type	
RTD	
• Pt100 (IEC 60751), 3-wire	**B**
• Pt100 (IEC 60751), 4-wire	**C**
• Pt1000 (IEC 60751), 3-wire	**D**
• Pt1000 (IEC 60751), 4-wire	**E**
TC	
• Type B	**F**
• Type E	**G**
• Type J	**H**
• Type K	**J**
• Type L	**K**
• Type N	**L**
• Type R	**N**
• Type S	**P**
• Type T	**Q**
Potentiometer, 4-wire	**R**
Input 2, type	
Without input 2	**A**
CJC configuration for TC	
None CJC	**0**
Internal CJC	**1**
External CJC RTD Pt100 (IEC 60751), 3-wire	**3**
External CJC RTD Ni100 (DIN 43760-87), 3-wire	**6**
Material of non-wetted parts	
Die-cast aluminum enclosure	**1**
Type of protection (Ex)	
General purpose	**A**
Intrinsic safety (Ex i) / Non-incendive field wiring (NIFW)	**B**
Flameproof enclosure (Ex d) / Explosion proof (XP)	**C**
Dust ignition protection by enclosure zone 21/22 (Ex t) / Dust ignition proof (DIP) / Increased safety zone 2 (Ex ec) / Non-incendive (NI)	**L**
Flameproof enclosure (Ex d) / Intrinsic safety (Ex i) / Dust ignition protection by enclosure zone 21/22 (Ex t) / Increased safety zone 2 (Ex ec)	**S**
Electrical connection/cable entries	
2x M20 x 1.5	**F**
2x ½'' NPT	**M**
Local operation	
Without local operation	**0**
Local operation (closed lid)	**1**
Local operation (lid with glass window)	**2**

Options	Order Code
Append "**-Z**" to Article No., add order code and, if applicable, free text.	
Cable gland included	
Plastic	**A00**
Metal	**A01**
Stainless steel	**A02**
Stainless steel 316L/1.4404	**A03**
CMP, for XP devices	**A10**
CAPRI ADE 4F, CuZn, cable inner diameter 7 ... 12 mm, cable outer diameter 10 ... 16 mm	**A11**
CAPRI ADE 4F, stainless steel, cable inner diameter 7 ... 12 mm, cable outer diameter 10 ... 16 mm	**A12**
Mounting cable glands/plugs	
Cable gland mounted	**A97**
Device plug for output, mounted right	**A98**
Device options	
Degree of protection IP66 / IP68 (not for device plugs M12 and Han)	**D30**
General approval without Ex approval	
Worldwide (CE, RCM) except EAC, FM, KCC	**E00**
Explosion protection certificates	
ATEX (Europe) and IECEx (world)	**E47**
Mounting system (only single chamber enclosures)	
Pipe mounting kit for single chamber enclosure, stainless steel 316L	**H06**
Wall mounting kit for single chamber enclosure, stainless steel 316L	**H07**

© Siemens 2020

Selection and ordering data

Dual chamber enclosure

	Article No.
SITRANS TF320 Temperature transmitter with dual chamber enclosure for wall or pipe mounting, one configurable input and a galvanically isolated 2-wire output. ↗	**7NG035** ■ - ■■■■■ - 0 ■■
↗ Click on the Article No. for the online configuration in the PIA Life Cycle Portal.	
Communication	
With HART (4 ... 20 mA)	**0**
Without HART (4 ... 20 mA)	**7**
Primary value output	
Input 1	**0**
Input 1, type	
RTD	
• Pt100 (IEC 60751), 3-wire	**B**
• Pt100 (IEC 60751), 4-wire	**C**
• Pt1000 (IEC 60751), 3-wire	**D**
• Pt1000 (IEC 60751), 4-wire	**E**
TC	
• Type B	**F**
• Type E	**G**
• Type J	**H**
• Type K	**J**
• Type L	**K**
• Type N	**L**
• Type R	**N**
• Type S	**P**
• Type T	**Q**
Potentiometer, 4-wire	**R**
Input 2, type	
Without input 2	**A**
CJC configuration for TC	
Without CJC	**0**
Internal CJC	**1**
External CJC RTD Pt100 (IEC 60751), 3-wire	**3**
External CJC RTD Ni100 (DIN 43760-87), 3-wire	**6**
Material of non-wetted parts	
Die-cast aluminum enclosure	**1**
Enclosure made of stainless steel precision casting CF3M/1.4409 (similar to 316L)	**2**
Type of protection (Ex)	
General purpose	**A**
Intrinsic safety (Ex i) / Non-incendive field wiring (NIFW)	**B**
Flameproof enclosure (Ex d) / Explosion proof (XP)	**C**
Dust ignition protection by enclosure zone 21/22 (Ex t) / Dust ignition proof (DIP) / Increased safety zone 2 (Ex ec) / Non-incendive (NI)	**L**
Flameproof enclosure (Ex d) / Intrinsic safety (Ex i) / Dust ignition protection by enclosure zone 21/22 (Ex t) / Increased safety zone 2 (Ex ec)	**S**
Electrical connection/cable entries	
2x M20 x 1.5	**F**
2x ½" NPT	**M**
Local operation	
Without local operation	**0**
Local operation (closed lid)	**1**
Local operation (lid with glass window)	**2**

Options	Order Code
Append "**-Z**" to Article No., add order code and, if applicable, free text.	
Cable gland included	
Plastic	**A00**
Metal	**A01**
Stainless steel	**A02**
Stainless steel 316L/1.4404	**A03**
CMP, for XP devices	**A10**
CAPRI ADE 4F, CuZn, cable inner diameter 7 ... 12 mm, cable outer diameter 10 ... 16 mm	**A11**
CAPRI ADE 4F, stainless steel, cable inner diameter 7 ... 12 mm, cable outer diameter 10 ... 16 mm	**A12**
Mounting cable glands/plugs	
Cable gland mounted	**A97**
Device plug for output, mounted right	**A98**
Device options	
Double layer coating (epoxy resin and polyurethane) 120 µm of enclosure and lid	**D20**
Degree of protection IP66 / IP68 (not for device plugs M12 and Han)	**D30**
Stainless steel Ex plate 1.4404/316L	**D42**
General approval without Ex approval	
Worldwide (CE, RCM) except EAC, FM, KCC	**E00**
Explosion protection certificates	
ATEX (Europe) and IECEx (world)	**E47**
Mounting brackets (only dual chamber enclosure)	
Wall/pipe mounting bracket for dual chamber enclosure, steel	**H01**
Wall/pipe mounting bracket for dual chamber enclosure, stainless steel 304	**H02**
Wall/pipe mounting bracket for dual chamber enclosure, stainless steel 316L	**H03**

© Siemens 2020

Accessories

	Article No.
Additional accessories for assembly, connection and transmitter configuration, see page 2/251.	
Modems	
Modem with USB interface and SIPROM T software	**7NG3092-8KN**
HART modem with USB interface	**7MF4997-1DB**
Thread adapter	
Thread adapter M20x1.5 (male thread) to ½-14 NPT (female thread)	**7MP1990-0BA00**
Thread adapter M20x1.5 (male thread) to G½ (female thread)	**7MP1990-0BB00**
Local operation	
Local operation for temperature transmitter in dual chamber enclosure	**7MF7902-1AD**
Mounting system for local operation 7MF7902-1AD in single chamber enclosure	**7MF7902-1AS**
Mounting brackets (only dual chamber enclosure)	
Wall/pipe mounting bracket for dual chamber enclosure, steel, 5/16-24UNF	**7MF7900-1AB**
Wall/pipe mounting bracket for dual chamber enclosure, steel, M8	**7MF7900-1AC**
Wall/pipe mounting bracket for dual chamber enclosure, stainless steel 316L, 5/16-24UNF	**7MF7900-1AH**
Wall/pipe mounting bracket for dual chamber enclosure, stainless steel 316L, M8	**7MF7900-1AJ**
Mounting system (only single chamber enclosures)	
Pipe mounting kit for single chamber enclosure, stainless steel 316L	**7MF7900-1AK**
Wall mounting kit for single chamber enclosure, stainless steel 316L	**7MF7900-1AL**
Cable gland	
Cable gland, gray, non-Ex, M20	**7MF7906-1AB**
Cable gland, gray, non-Ex, NPT	**7MF7906-1BB**
Cable gland, metal, non-Ex, NPT	**7MF7906-1BD**
Cable gland, metal, non-Ex, M20	**7MF7906-1AD**
Cable gland, metal, Ex-d, NPT	**7MF7906-1BE**
Cable gland, metal, Ex-d, M20	**7MF7906-1AE**
Cable gland, 316L, non-Ex, NPT	**7MF7906-1BH**
Cable gland, 316L, non-Ex, M20	**7MF7906-1AH**
Cable gland, 316L, Ex-d, NPT	**7MF7906-1BJ**
Cable gland, 316L, Ex-d, M20	**7MF7906-1AJ**
Cable gland, E1FX Tri-Star ½-14 NPT, CMP	**7MF7906-1NE**
Cable gland, ½ NPT Capri ADE 4F cpl., CuZn	**7MF7906-1PE**
Cable gland, ½ NPT Capri ADE 4F cpl., stainless steel	**7MF7906-1PJ**

	Article No.
Plug and cable socket	
Plug Han 7D, plastic, straight	**7MF7906-2AB**
Plug Han 7D, plastic, angled	**7MF7906-2AC**
Plug Han 7D, metal, straight, blue	**7MF7906-2AQ**
Plug Han 7D, metal, straight, grey	**7MF7906-2AN**
Plug Han 7D, metal, angled, blue	**7MF7906-2AR**
Plug Han 7D, metal, angled, grey	**7MF7906-2AP**
Plug Han 8D, plastic, straight	**7MF7906-2EB**
Plug Han 8D, plastic, angled	**7MF7906-2EC**
Plug Han 8D, metal, straight, blue	**7MF7906-2EQ**
Plug Han 8D, metal, straight, grey	**7MF7906-2EN**
Plug Han 8D, metal, angled, blue	**7MF7906-2ER**
Plug Han 8D, metal, angled, grey	**7MF7906-2EP**
Cable socket, plastic, for plug Han 7D	**7MF7906-2BB**
Cable socket, plastic, for plug Han 8D	**7MF7906-2FB**
Cable socket, metal, for Han 7D blue	**7MF7906-2BQ**
Cable socket, metal, for Han 8D blue	**7MF7906-2FQ**
Cable socket, metal, for Han 7D grey	**7MF7906-2BN**
Cable socket, metal, for Han 8D grey	**7MF7906-2FN**
Plug M12 with cable socket, stainless steel	**7MF7906-3AB**
Overvoltage protection	
Overvoltage protection up to 20 kV, M20	**7MF7906-3AC**
Overvoltage protection up to 20 kV, NPT	**7MF7906-3AD**
Lid	
Closed lid aluminum, painted 2x, without glass window, with seal NBR	**7MF7901-1BB**
Closed lid aluminum, painted 2x, without glass window, with seal FVMQ	**7MF7901-1BC**
Lid aluminum 2x coated, with glass window, with seal NBR	**7MF7901-1BG**
Lid aluminum 2x coated, with glass window, with seal FVMQ	**7MF7901-1BH**
Closed lid stainless steel precision casting, without glass window, with seal NBR	**7MF7901-2AB**
Closed lid stainless steel precision casting, without glass window, with seal FVMQ	**7MF7901-2AC**
Lid stainless steel precision casting, with glass window, with seal NBR	**7MF7901-2AG**
Lid stainless steel precision casting, with glass window, with seal FVMQ	**7MF7901-2AH**

Ordering example

SITRANS TF320 (single chamber enclosure)

7NG0340-0BA01-0AF2-Z Y01+Y17+P10

Y01: -10 ... +100 °C

Y17: TICA123

Factory setting

- Pt100 (IEC 60751) in 3-wire connection
- Measuring range: 0 ... 100 °C (32 ... 212 °F)
- Fault current
  - Input circuit wire break: 22.8 mA
  - Input circuit short circuit: 22.4 mA
  - Input monitoring wire break and short-circuit
- No trimming of input and output (offset)
- Damping 0.0 s

© Siemens 2020

Dimensional drawings

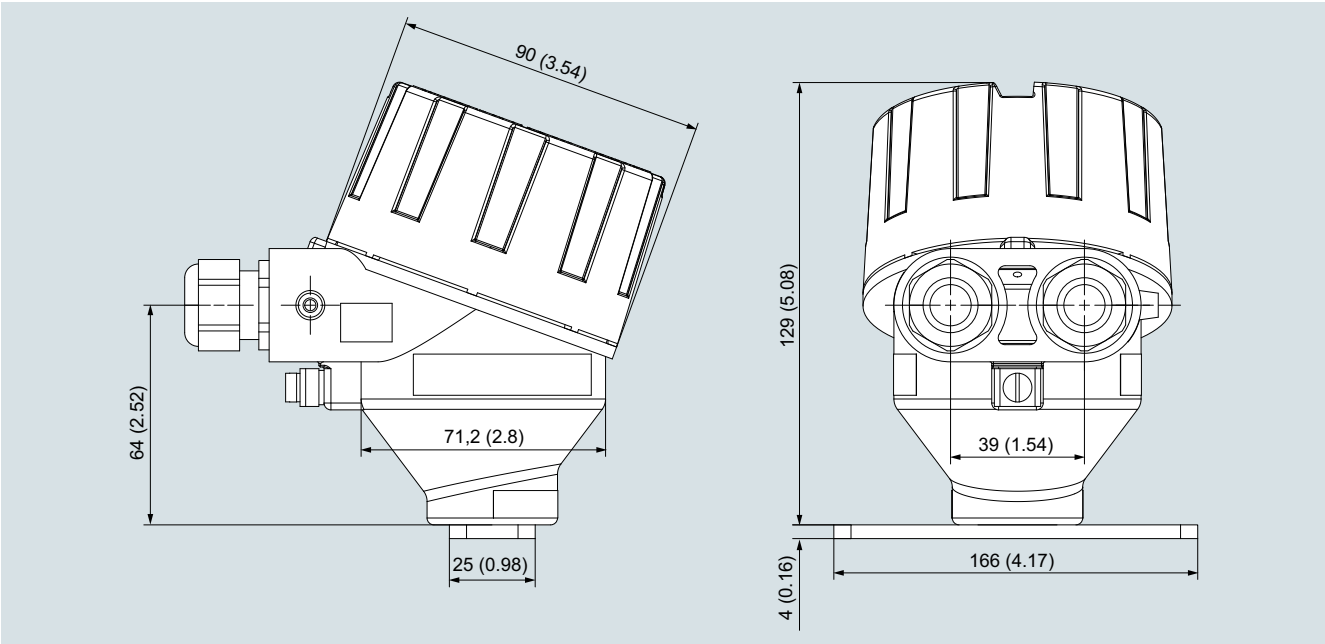

SITRANS TF320, single chamber enclosure, dimensions in mm (inch)

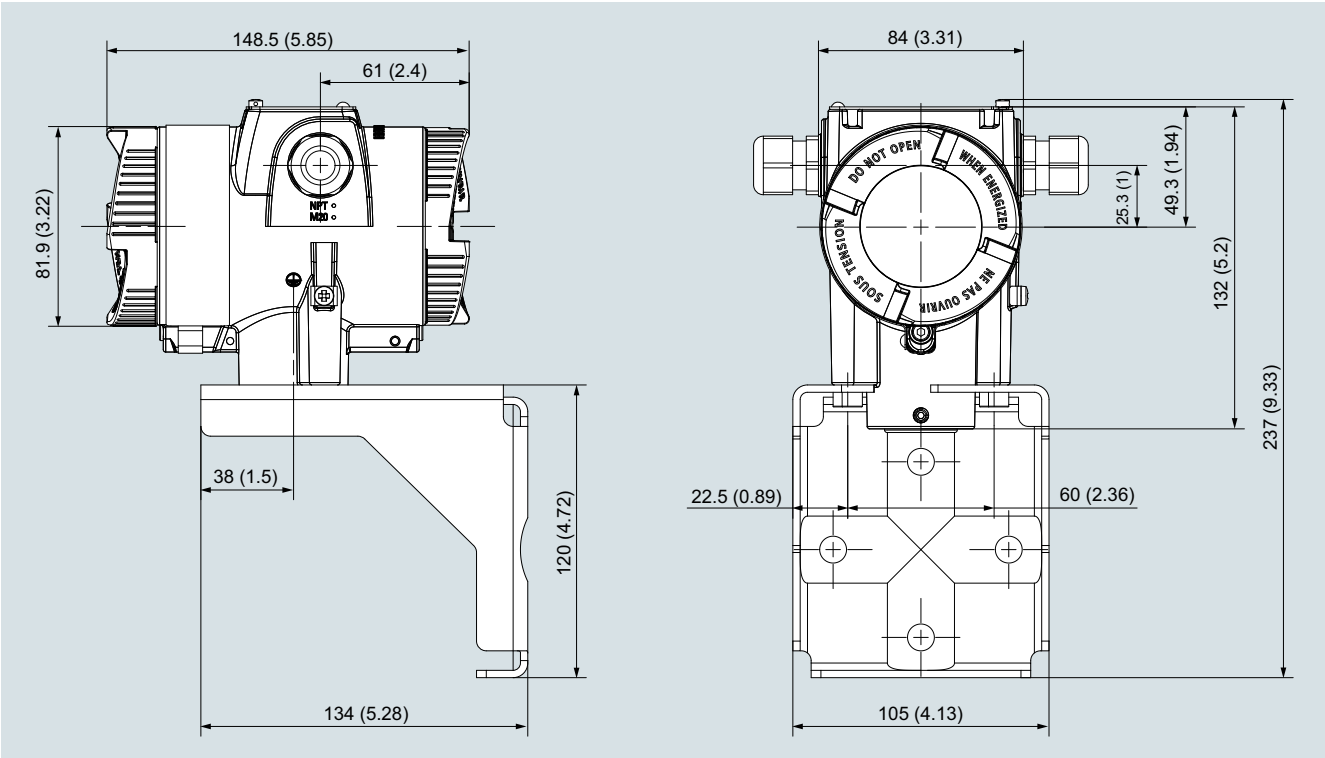

SITRANS TF320, dual chamber enclosure, dimensions in mm (inch)

© Siemens 2020

Circuit diagrams

Connections

Input connection

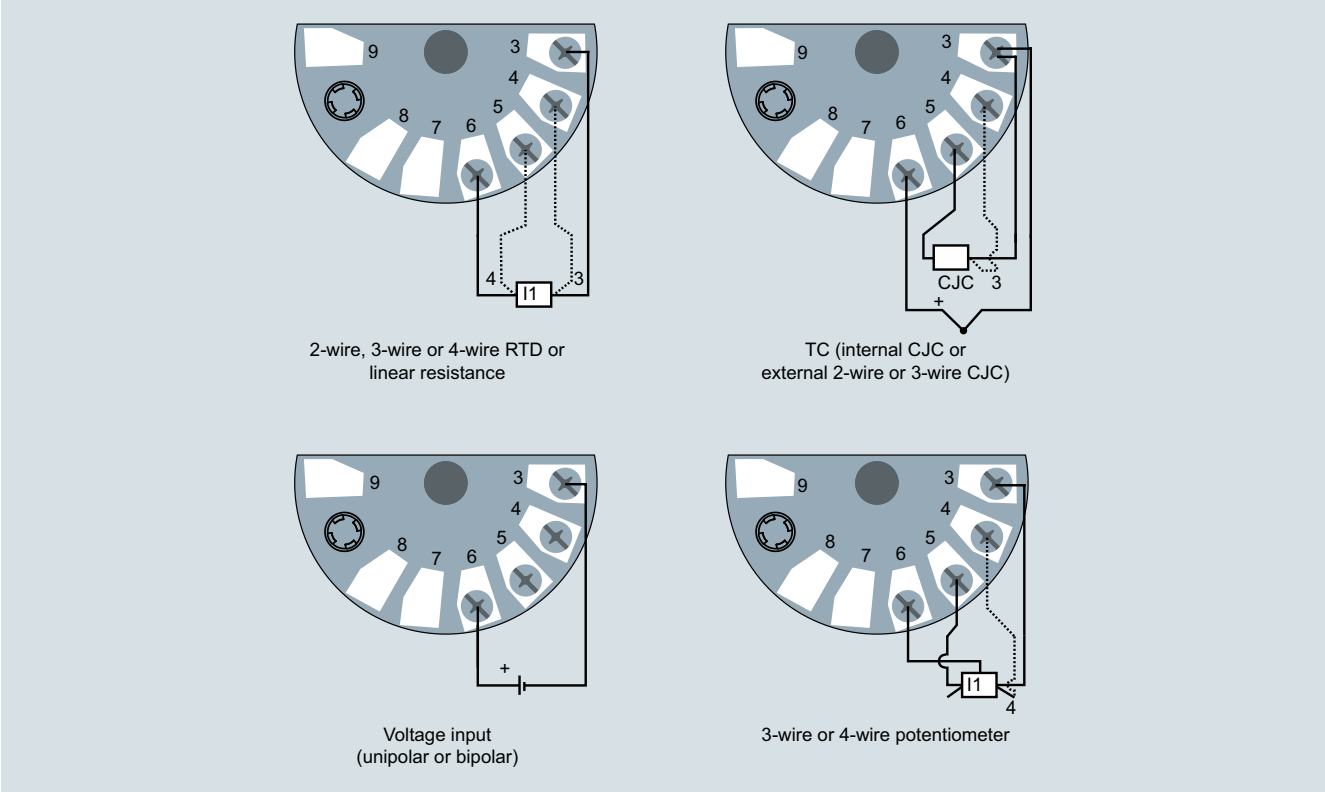

SITRANS TF320 in single chamber enclosure (7NG034*), input connection assignment

© Siemens 2020

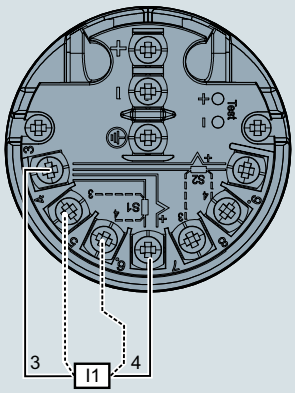

2-wire, 3-wire or 4-wire RTD or linear resistance I1: Input 1

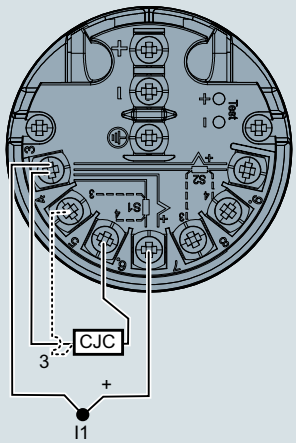

TC (internal CJC or external 2-wire or 3-wire CJC)

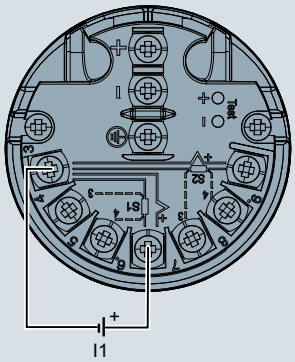

Voltage input (unipolar or bipolar)

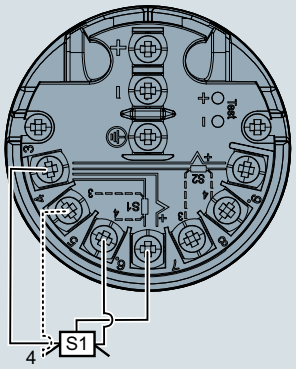

3-wire or 4-wire potentiometer

SITRANS TF320 in dual chamber enclosure (7NG035*), input connection assignment

Output connection

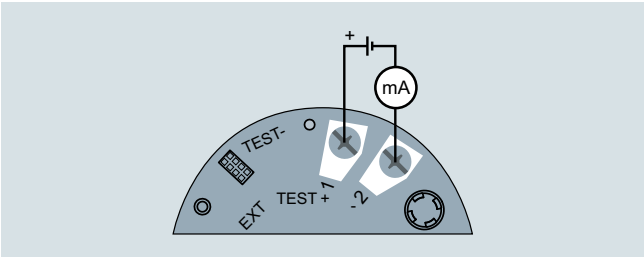

SITRANS TF320 in single chamber enclosure (7NG034*), output connection assignment

© Siemens 2020

Overview

SITRANS TF420 in dual chamber enclosure

SITRANS TF420 in single chamber enclosure

- 2-wire temperature transmitter with HART communication interface
- Universal input for virtually any type of temperature sensor
- Connection of two independent input circuits for redundant operation (high input availability)
- Input drift detection
- Can be configured via PC, HART 7 or optional local operation

Benefits

- Universally applicable as a temperature transmitter with galvanic isolation for:
  - Resistance thermometer (2-wire, 3-wire, 4-wire connection)
  - Thermocouples
  - Linear resistances, potentiometer and DC voltage sources
- Local operation of the temperature transmitter via display (single chamber enclosure) or control keys accessible from outside (dual chamber enclosure)
- Rugged single or dual chamber enclosure made of die-cast aluminum or stainless steel 316/316L
- Electronic compartment isolated (watertight) from terminal compartment in dual chamber enclosure
- Degree of protection IP66/67/68 (1.5 m/2 h)
- Electromagnetic compatibility according to DIN EN 61326 and NE21
- Test terminals for direct read-out of the output signal without breaking the current loop
- Remote installation option:
  - Measuring point is difficult to access
  - Measuring point is subjected to high temperatures
  - Measuring point is subjected to vibration through plant
  - Long neck pipes and thermowells must be avoided
- Mounted directly on sensors
- Temperature transmitters of the "intrinsically safe protection type, increased safety for zone 2, flameproof and dust-protected" type of protection can be installed in hazardous areas. The transmitter meets the requirements of the EU Directive 2014/34/EU (ATEX), the FM and CSA regulations as well as other national approvals, e.g. EACEx, NEPSI, KCs, Inmetro.
- SIL2/3 (with order note C20)

Application

SITRANS TF420 with its two sensor inputs can be used everywhere where temperatures need to be measured without interruption under particularly adverse conditions and where a convenient local display is ideal. Which is why users from all industries have opted for this field device. The rugged enclosure protects the electronics. The stainless steel model is almost completely resistant to sea water and other aggressive substances. The inner workings offer high measuring accuracy, universal input and a wide range of diagnostic options.

© Siemens 2020

Function

Configuration

The communication capability over the HART protocol V 7 permits parameterization using a PC or HART communicator (handheld communicator). The SIMATIC PDM makes it easy.

The optional local operation on the device gives you the possibility to configure the device's most important functions very quickly.

Principle of operation

SITRANS TF420 as temperature transmitter

Two sensor signals, whether resistance thermometers (RTD), thermocouples (TC), Ω or mV signals, are amplified and linearized. Input and output side are galvanically isolated. An internal cold junction is integrated for measurements with thermocouples.

The device outputs a temperature-linear direct current from 4 to 20 mA. As well as the analog transmission of measured values from 4 to 20 mA, the HART version also supports digital communication for online diagnostics, measured value transmission, and configuration.

SITRANS TF420 automatically detects when a sensor should be interrupted or is indicating a short-circuit. If the back-up functionality has been selected in the primary value display, the SITRANS TF420 automatically switches to the 2nd input without interrupting the measured value; e.g. primary value input 1 with input 2 as backup. The practical test terminals allow direct measurement of 4 to 20 mA signals over an ammeter without interrupting the output current loop.

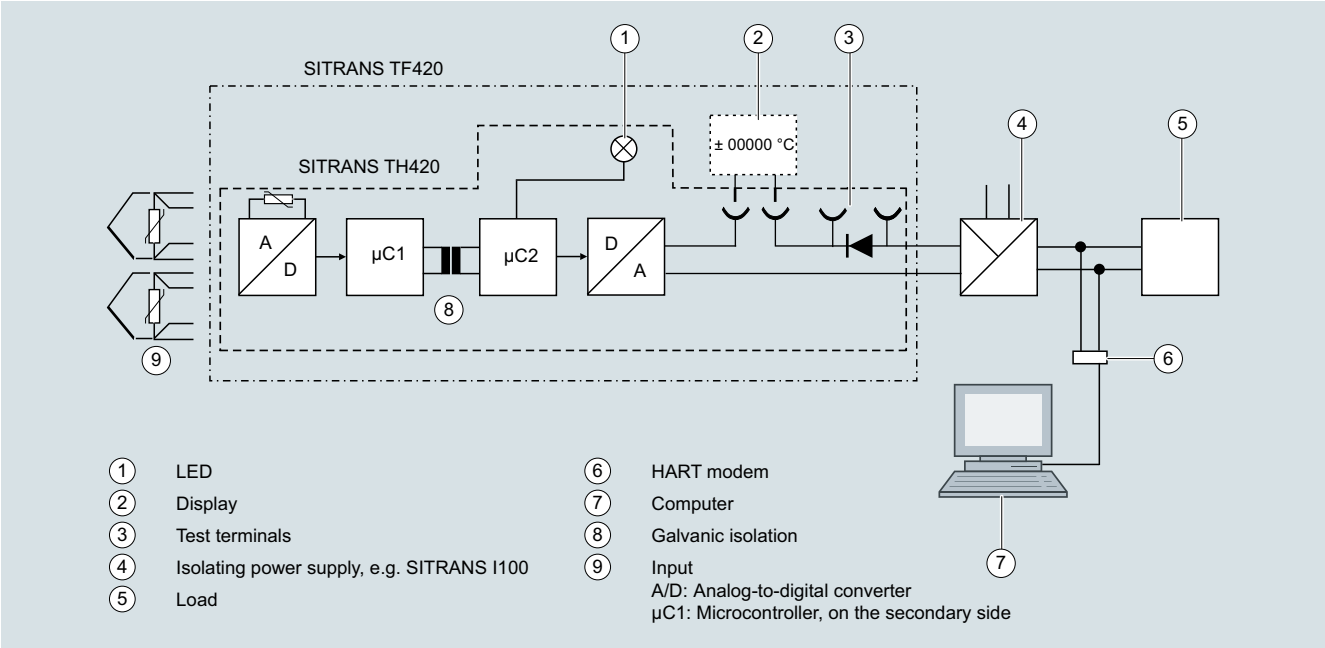

Function block diagram SITRANS TF420 with integrated SITRANS TH420

© Siemens 2020

Technical specifications

General	
Supply voltage[1) 2)]	
• Without explosion protection (non-Ex)	10.5 ... 48 V DC
• with explosion protection (Ex i)	10.5 ... 30 V DC
Additional minimum supply voltage when using test terminals	0.8 V
Maximum power loss	≤ 850 mW
Minimum load resistance at supply voltage > 37 V	(V_{supply} - 37 V)/23 mA
Insulation voltage, test/operation	
• Without explosion protection (non-Ex)	2.5 kV AC/55 V AC
• with explosion protection (Ex i)	2.5 kV AC/42 V AC
Polarity protection	All inputs and outputs
Write protection	Wire jumper (transmitter), switch (on display) or software
Warm-up time	< 5 min
Starting time	< 2.75 s
Programming	HART
Signal-to-noise ratio	> 60 dB
Long-term stability	Better than: • ± 0.05% of measuring span/year • ± 0.18% of measuring span/5 years
Response time	4 ... 20 mA: ≤ 55 ms HART: ≤ 75 ms (typically 70 ms)
Programmable damping	0 ... 60 s
Signal dynamic	
• Input	24 bit
• Output	18 bit
Influence of change in supply voltage	< 0.005% of measuring span/V DC
Input	
Resistance thermometer (RTD)	
Input type	
• Pt10 ... 10000	• IEC 60751 • JIS C 1604-8 • GOST 6651_2009 • Callendar-Van Dusen
• Ni10 ... 10000	• DIN 43760-1987 • GOST 6651-2009/OIML R84:2003
• Cu5 ... 1000	• Edison Copper Winding No. 15 • GOST 6651-2009/OIML R84:2003
Type of connection	2-wire, 3-wire or 4-wire
Line resistance per wire	Max. 50 Ω
Input current	< 0.15 mA
Effect of the line resistance (with 3-wire and 4-wire connections)	< 0.002 Ω/Ω
Cable, wire-wire capacity	
• Pt1000, Pt10000 (IEC 60751 and JIS C 1604-8)	Max. 30 nF
• All other input types	Max. 50 nF
Fault detection, programmable	None, short-circuited, defective, short-circuited or defective **Note** When the low limit for the configured input type is below the constant detection limit for short-circuited inputs, the detection of short circuits is disabled regardless of the configuration of the fault detection.
Detection limit for short-circuited input	15 Ω
Fault detection time (RTD)	≤ 75 ms (typically 70 ms)
Fault detection time (for 3-wire and 4-wire)	≤ 2 000 ms
Thermocouples (TC)	
Input type	
• B	IEC 60584-1
• E	IEC 60584-1
• J	IEC 60584-1
• K	IEC 60584-1
• L	DIN 43710
• Lr	GOST 3044-84
• N	IEC 60584-1
• R	IEC 60584-1
• S	IEC 60584-1
• T	IEC 60584-1
• U	DIN 43710
• W3	ASTM E988-96
• W5	ASTM E988-96
• LR	GOST 3044-84
Cold junction compensation (CJC)	Constant, internal or external over Pt100 or Ni100 RTD
• Temperature range internal CJC	-50 ... +100 °C (-58 ... +212 °F)
• Connection external CJC	2-wire or 3-wire
• External CJC, line resistance per wire (for 3-wire and 4-wire connections)	50 Ω
• Effect of the line resistance (with 3-wire and 4-wire connections)	< 0.002 Ω/Ω
• Input current external CJC	< 0.15 mA
• Temperature range external CJC	-50 ... +135 °C (-58 ... +275 °F)
• Cable, wire-wire capacity	Max. 50 nF
• Total line resistance	Max. 10 kΩ
• Fault detection, programmable	None, short-circuited, defective, short-circuited or defective **Note** The short-circuited fault detection only applies to the CJC input.
• Fault detection time (TC)	≤ 75 ms (typically 70 ms)
• Fault detection time, external CJC (for 3-wire and 4-wire)	≤ 2 000 ms
Linear resistance	
Input range	10 Ω ... 100 kΩ
Minimum measuring span	25 Ω
Type of connection	2-wire, 3-wire or 4-wire
Line resistance per wire	Max. 50 Ω
Input current	< 0.15 mA
Effect of the line resistance (with 3-wire and 4-wire connections)	< 0.002 Ω/Ω
Cable, wire-wire capacity	
• R > 400 Ω	Max. 30 nF
• R ≤ 400 Ω	Max. 50 nF
Fault detection, programmable	None, defective

© Siemens 2020

Potentiometers	
Input range	0 ... 100 kΩ
Minimum measuring span	25 Ω
Type of connection	2-wire, 3-wire or 4-wire
Line resistance per wire	Max. 50 Ω
Input current	< 0.15 mA
Effect of the line resistance (with 4-wire and 5-wire connections)	< 0.002 Ω/Ω
Cable, wire-wire capacity	
• R > 400 Ω	Max. 30 nF
• R ≤ 400 Ω	Max. 50 nF
Fault detection, programmable	None, short-circuited, defective, short-circuited or defective
	Note
	When the configured potentiometer size is below the constant detection limit for short-circuited inputs, the detection of short circuits is disabled regardless of the configuration of the fault detection.
Detection limit for short-circuited input	15 Ω
Fault detection time, wiper arm (no short-circuit detection)	≤ 75 ms (typically 70 ms)
Fault detection time, element	≤ 2 000 ms
Fault detection time (for 4-wire and 5-wire)	≤ 2 000 ms
Supply voltage	
Measuring range	
• Unipolar	-100 ... 1700 mV
• Bipolar	-800 ... +800 mV
Minimum measuring span	2.5 mV
Input resistance	10 MΩ
Cable, wire-wire capacity	
• Input range: -100 ... 1700 mV	Max. 30 nF
• Input range: -20 ... 100 mV	Max. 50 nF
Fault detection, programmable	None, defective
Fault detection time	≤ 75 ms (typically 70 ms)
Output and HART communication	
Normal range, programmable	3.8 ... 20.5 mA/20.5 ... 3.8 mA
Extended range (output limits), programmable	3.5 ... 23 mA/23 ... 3.5 mA
Programmable input/output limits	
• Fault current	Enable/disable
• Fault current setting	3.5 ... 23 mA
Update time	10 ms
Load (with current output)	≤ (V_{Supply} - 10.5)/0.023 Ω
Load stability	< 0.01% of measuring span/100 Ω (measuring span = currently selected range)
Input fault detection, programmable (detection of input short circuits is ignored with TC and voltage inputs)	3.5 ... 23 mA
NAMUR NE43 Upscale	> 21 mA
NAMUR NE43 Downscale	< 3.6 mA
HART protocol versions	HART 7
Measuring accuracy	
Input accuracy	See "Input accuracy" table
Output accuracy	See "Output accuracy" table

Rated conditions	
Ambient temperature	
• Without local operation in single chamber enclosure	-50 ... +85 °C (-58 ... +185 °F)
• With local operation	-40 ... +85 °C (-40 ... +185 °F)
• For transmitters with functional safety	-40 ... +80 °C (-40 ... +176 °F)
Storage temperature	-50 ... +85 °C (-58 ... +185 °F)
Reference temperature for sensor calibration	24 °C ±1.0 °C (75.2 °F ±1.8 °F)
Relative humidity	< 99% (no condensation)
Degree of protection	
• Temperature transmitter enclosure	IP66/IP67/IP68
• Terminals	IP00
Mechanical construction	
Weight	
• Single chamber enclosure	0.85 kg (1.87 lb)
• Dual chamber enclosure	• Aluminum: 1.3 kg (2.87 lb) • Stainless steel: 3.3 kg (7.28 lb)
Maximum core cross-section	
• Single chamber enclosure	1.5 mm² (AWG 16)
• Dual chamber enclosure	2.5 mm² (AWG 14)
Tightening torque for clamping screws	0.5 ... 0.6 Nm
Vibrations	IEC 60068-2-6
• 2 ... 25 Hz	± 1.6 mm (0.07 inch)
• 25 ... 100 Hz	± 4 g
Certificates and approvals	
Explosion protection ATEX/IECEx and others	
Certificates[3)]	IECEx DEK 19.0069X DEKRA 19ATEX0106 X (Category 1) DEKRA 19ATEX0107 X (Category 3)
"Intrinsic safety ia/ib" type of protection	For use in Zone 0, 1, 2
• ATEX	II 1 G Ex ia IIC T6 ... T4 Ga II 2(1) G Ex ib [ia Ga] IIC T6 ... T4 Gb
• IECEx and others	Ex ia IIC T6 ... T4 Ga Ex ib [ia Ga] IIC T6 ... T4 Gb
• EACEx	Ex ia IIC T6 ... T4 Ga Ex ib [ia Ga] IIC T6 ... T4 Gb
"Intrinsic safety ic" type of protection	For use in Zones 2
• ATEX	II 2 G Ex ic IIC T6…T4 Gc
• IECEx and others	Ex ic IIC T6 ... T4 Gc
• EACEx	2Ex ic IIC T6…T4 Gc X
"Non-sparking/increased safety nA/ec" type of protection	For use in Zones 2
• ATEX	II 2 G Ex nA IIC T6…T4 Gc II 2 G Ex ec IIC T6…T4 Gc
• IECEx and others	Ex nA IIC T6 ... T4 Gc Ex ec IIC T6 ... T4 Gc
• EACEx	2Ex nA IIC T6…T4 Gc
• "Flameproof enclosure db" type of protection	For use in Zone 1
• ATEX	II 2 G Ex db IIC T6…T4 Gb
• IECEx and others	Ex db IIC T6 ... T4 Gb
• EACEx	1Ex d IIC T6…T4 Gb X
• "Protection by enclosure tb" type of protection	For use in Zone 21
• ATEX	II 2 D Ex tb IIC T100°C Db
• IECEx and others	Ex tb IIC T100°C Db
• EACEx	Ex tb IIC T100°C Db X

© Siemens 2020

Explosion protection CSA/FM for Canada and USA	
Certificates	FMxxCAxxxx FMxxUSxxxx
"Intrinsic safety ia" type of protection	IS, CL I, Div 1, GP ABCD, T6 ... T4 Ex ia IIC T6 … T4 Ga AEx ia IIC T6 … T4 Ga or: Ex ib [ia Ga] IIC T6…T4 Gb AEx ib [ia Ga] IIC T6…T4 Gb
"Non incendive field wiring NIFW" type of protection	NIFW, CL I, Div 2, GP ABCD T6 ... T4
"Non incendive NI" type of protection	NI, CL I, Div 2, GP ABCD T6...T4 Ex nA IIC T6 ... T4 Gc AEx nA IIC T6 ... T4 Gc
"Explosion-proof XP" type of protection	XP/ CL I / DIV1 / GP ABCD / T6....T4 CL I / Zn1 / AEx/Ex d IIC T6...T4 Gb
"Dust-protected DIP" type of protection	DIP/ CL II, III / DIV 1 / GP EFG / T6...T4 Zn21 / AEx/Ex tb IIIC T100°C Gb

1) Note that the minimum supply voltage must correspond to the value measured at the terminals of the SITRANS TF420.
All external voltage drops must be taken into consideration.

2) Protect the device from overvoltage with the help of a suitable power supply or suitable overvoltage protection equipment.

3) Additional available certificates are listed on the Internet at http://www.siemens.com/processinstrumentation/certificates

Measuring ranges/Minimum measuring span

RTD

Input type	Standard	Measuring range in °C (°F)	α_0 in °C^{-1} (°F^{-1})	Minimum measuring span in °C (°F)
Pt10 ... 10000	IEC 60751	-200 ... +850 (-328 ... +1 562)	0.003851 (0.002139)	10 (50)
	JIS C 1604-8	-200 ... +649 (-328 ... +1 200)	0.003916 (0.002176)	10 (50)
	GOST 6651_2009	-200 ... +850 (-328 ... +1 562)	0.003910 (0.002172)	10 (50)
	Callendar-Van Dusen	-200 ... +850 (-328 ... +1 562)	-	10 (50)
Ni10 ... 10000	DIN 43760-1987	-60 ... +250 (-76 ... +482)	0.006180 (0.003433)	10 (50)
	GOST 6651-2009/OIML R84:2003	-60 ... +180 (-76 ... +356)	0.006170 (0.003428)	10 (50)
Cu5 ... 1000	Edison Copper Winding No. 15	-200 ... +260 (-328 ... +500)	0.004270 (0.002372)	100 (212)
	GOST 6651-2009/OIML R84:2003	-180 ... +200 (-292 ... +392)	0.004280 (0.002378)	100 (212)
	GOST 6651-94	-50 ... +200 (-58 ... +392)	0.004260 (0.002367)	100 (212)

TC

Input type	Standard	Measuring range in °C (°F)	Minimum measuring span in °C (°F)
B	IEC 60584-1	0 (85) ... 1 820 (32 (185) ... 3 308)	100 (212)
E	IEC 60584-1	-200 ... +1 000 (-392 ... +1 832)	50 (122)
J	IEC 60584-1	-100 ... +1 200 (-212 ... +2 192)	50 (122)
K	IEC 60584-1	-180 ... +1 372 (-356 ... +2 502)	50 (122)
L	DIN 43710	-200 ... +900 (-392 ... +1 652)	50 (122)
Lr	GOST 3044-84	-200 ... +800 (-392 ... +1 472)	50 (122)
N	IEC 60584-1	-180 ... +1 300 (-356 ... +2 372)	50 (122)
R	IEC 60584-1	-50 ... +1 760 (-122 ... +3 200)	100 (212)
S	IEC 60584-1	-50 ... +1 760 (-122 ... +3 200)	100 (212)
T	IEC 60584-1	-200 ... +400 (-392 ... +752)	50 (122)
U	DIN 43710	-200 ... +600 (-392 ... +1 112)	50 (122)
W3	ASTM E988-96	0 ... 2 300 (32 ... 4 172)	100 (212)
W5	ASTM E988-96	0 ... 2 300 (32 ... 4 172)	100 (212)
LR	GOST 3044-84	-200 ... +800 (-392 ... +1472)	50 (122)

© Siemens 2020

Input accuracy

Basic values

Input type	Basic accuracy	Temperature coefficient[1)]
RTD		
Pt10	≤ ±0.8 °C (1.44 °F)	≤ ±0.020 °C/°C (°F/°F)
Pt20	≤ ±0.4 °C (0.72 °F)	≤ ±0.010 °C/°C (°F/°F)
Pt50	≤ ±0.16 °C (0.288 °F)	≤ ±0.004 °C/°C (°F/°F)
Pt100	≤ ±0.04 °C (0.072 °F)	≤ ±0.002 °C/°C (°F/°F)
Pt200	≤ ±0.08 °C (0.144 °F)	≤ ±0.002 °C/°C (°F/°F)
Pt500	$T_{max.}$ < 180 °C (356 °F) = ≤ ±0.08 °C (0.144 °F) $T_{max.}$ > 180 °C (356 °F) = ≤ ±0.16 °C (0.288 °F)	≤ ±0.002 °C/°C (°F/°F)
Pt1000	≤ ±0.08 °C (0.144 °F)	≤ ±0.002 °C/°C (°F/°F)
Pt2000	$T_{max.}$ < 300 °C (572 °F) = ≤ ±0.08 °C (0.144 °F) $T_{max.}$ > 300 °C (572 °F) = ≤ ±0.4 °C (0.72 °F)	≤ ±0.002 °C/°C (°F/°F)
Pt10000	≤ ±0.16 °C (0.288 °F)	≤ ±0.002 °C/°C (°F/°F)
Pt x	Largest tolerance of neighboring points	Largest temperature coefficient of neighboring points
Ni10	≤ ±1.6 °C (2.88 °F)	≤ ±0.020 °C/°C (°F/°F)
Ni20	≤ ±0.8 °C (1.44 °F)	≤ ±0.010 °C/°C (°F/°F)
Ni50	≤ ±0.32 °C (0.576 °F)	≤ ±0.004 °C/°C (°F/°F)
Ni100	≤ ±0.16 °C (0.288 °F)	≤ ±0.002 °C/°C (°F/°F)
Ni120	≤ ±0.16 °C (0.288 °F)	≤ ±0.002 °C/°C (°F/°F)
Ni200	≤ ±0.16 °C (0.288 °F)	≤ ±0.002 °C/°C (°F/°F)
Ni500	≤ ±0.16 °C (0.288 °F)	≤ ±0.002 °C/°C (°F/°F)
Ni1000	≤ ±0.16 °C (0.288 °F)	≤ ±0.002 °C/°C (°F/°F)
Ni2000	≤ ±0.16 °C (0.288 °F)	≤ ±0.002 °C/°C (°F/°F)
Ni10000	≤ ±0.32 °C (0.576 °F)	≤ ±0.002 °C/°C (°F/°F)
Ni x	Largest tolerance of neighboring points	Largest temperature coefficient of neighboring points
Cu5	≤ ±1.6 °C (2.88 °F)	≤ ±0.040 °C/°C (°F/°F)
Cu10	≤ ±0.8 °C (1.44 °F)	≤ ±0.020 °C/°C (°F/°F)
Cu20	≤ ±0.4 °C (0.72 °F)	≤ ±0.010 °C/°C (°F/°F)
Cu50	≤ ±0.16 °C (0.288 °F)	≤ ±0.004 °C/°C (°F/°F)
Cu100	≤ ±0.08 °C (0.144 °F)	≤ ±0.002 °C/°C (°F/°F)
Cu200	≤ ±0.08 °C (0.144 °F)	≤ ±0.002 °C/°C (°F/°F)
Cu500	≤ ±0.16 °C (0.288 °F)	≤ ±0.002 °C/°C (°F/°F)
Cu1000	≤ ±0.08 °C (0.144 °F)	≤ ±0.002 °C/°C (°F/°F)
Cu x	Largest tolerance of neighboring points	Largest temperature coefficient of neighboring points
Linear resistance		
0 ... 400 Ω	≤ ±40 mΩ	≤ ±2 mΩ/°C (1.11 mΩ/°F)
0 ... 100 kΩ	≤ ±4 Ω	≤ ±0.2 Ω/°C (0.11 Ω/°F)
Potentiometers		
0 ... 100%	< 0.05%	< ± 0.005%
Supply voltage		
mV: -20 ... 100 mV	≤ ±5 µV	≤ ±0.2 µV/°C (0.11 µV/°F)
mV: -100 ... 1700 mV	≤ ±0.1 mV	≤ ±36 µV/°C (20 µV/°F)
mV: ± 800 mV	≤ ±0.1 mV	≤ ±32 µV/°C (17.8 µV/°F)
TC		
E	≤ ±0.2 °C (0.36 °F)	≤ ±0.025 °C/°C (°F/°F)
J	≤ ±0.25 °C (0.45 °F)	≤ ±0.025 °C/°C (°F/°F)
K	≤ ±0.25 °C (0.45 °F)	≤ ±0.025 °C/°C (°F/°F)
L	≤ ±0.35 °C (0.63 °F)	≤ ±0.025 °C/°C (°F/°F)
N	≤ ±0.4 °C (0.72 °F)	≤ ±0.025 °C/°C (°F/°F)
T	≤ ±0.25 °C (0.45 °F)	≤ ±0.025 °C/°C (°F/°F)
U	< 0 °C (32 °F) ≤ ±0.8 °C (1.44 °F) ≥ 0 °C (32 °F) ≤ ±0.4 °C (0.72 °F)	≤ ±0.025 °C/°C (°F/°F)
Lr	≤ ±0.2 °C (0.36 °F)	≤ ±0.1 °C/°C (°F/°F)
R	< 200 °C (392 °F) ≤ ±0.5 °C (0.9 °F) ≥ 200 °C (392 °F) ≤ ±1 °C (1.8 °F)	≤ ±0.1 °C/°C (°F/°F)
S	< 200 °C (392 °F) ≤ ±0.5 °C (0.9 °F) ≥ 200 °C (392 °F) ≤ ±1 °C (1.8 °F)	≤ ±0.1 °C/°C (°F/°F)

© Siemens 2020

Input type	Basic accuracy	Temperature coefficient[1]
W3	≤ ±0.6 °C (1.08 °F)	≤ ±0.1 °C/°C (°F/°F)
W5	≤ ±0.4 °C (0.72 °F)	≤ ±0.1 °C/°C (°F/°F)
B[2]	≤ ±1 °C (1.8 °F)	≤ ±0.1 °C/°C (°F/°F)
B[3]	≤ ±3 °C (5.4 °F)	≤ ±0.1 °C/°C (°F/°F)
B[4]	≤ ±8 °C (14.4 °F)	≤ ±0.8 °C/°C (°F/°F)
B[5]	Not specified	Not specified
CJC (internal)	< ±0.5 °C (0.9 °F)	Included in basic accuracy
CJC (external)	≤ ±0.08 °C (0.144 °F)	≤ ±0.002 °C/°C (°F/°F)

1) Temperature coefficients correspond to the specified values or 0.002% of the input span, depending on which value is greater.
2) Accuracy of the specification range > 400 °C (752 °F)
3) Accuracy of the specification range > 160 °C (320 °F) < 400 °C (752 °F)
4) Accuracy of the specification range > 85 °C (185 °F) < 160 °C (320 °F)
5) Accuracy of the specification range < 85 °C (185 °F)

Output accuracy

Output type	Basic accuracy	Temperature coefficient
Average value measurement	Average of accuracy of input 1 and input 2	Average of temperature coefficient of input 1 and input 2
Differential measurement	Sum of accuracy of input 1 and input 2	Sum of temperature coefficient of input 1 and input 2
Analog output	≤ ±1.6 µA (0.01% of the full output span)	≤ ±0.48 µA/K (≤ ±0.003% of the full output span/K)

© Siemens 2020

Selection and ordering data

Single chamber enclosure

	Article No.
SITRANS TF420 Temperature transmitter with single chamber enclosure for wall or pipe mounting, two separately configurable inputs and a galvanically isolated 2-wire output. ↗	**7NG044** ■ - ■■■■■ - 0 ■■■
↗ Click on the Article No. for the online configuration in the PIA Life Cycle Portal.	
Communication	
With HART (4 ... 20 mA)	**0**
Primary value output	
Input 1	**0**
Input 1, input 2 as redundancy (hot backup)	**1**
Input 2, input 1 as redundancy (hot backup)	**2**
Average input 1 and input 2, both as redundancy (hot backup)	**3**
Minimum input 1 and input 2, both as redundancy (hot backup)	**4**
Maximum input 1 and input 2, both as redundancy (hot backup)	**5**
Difference input 1 - input 2	**6**
Difference input 2 - input 1	**7**
Absolute difference	**8**
Input 1, type	
RTD	
• Pt100 (IEC 60751), 3-wire	**B**
• Pt100 (IEC 60751), 4-wire	**C**
• Pt1000 (IEC 60751), 3-wire	**D**
• Pt1000 (IEC 60751), 4-wire	**E**
TC	
• Type B	**F**
• Type E	**G**
• Type J	**H**
• Type K	**J**
• Type L	**K**
• Type N	**L**
• Type R	**N**
• Type S	**P**
• Type T	**Q**
Potentiometer, 4-wire	**R**
RTD	
• Pt100 (IEC 60751), 3-wire	**B**
• Pt100 (IEC 60751), 4-wire	**C**
• Pt1000 (IEC 60751), 3-wire	**D**
• Pt1000 (IEC 60751), 4-wire	**E**
TC	
• Type B	**F**
• Type E	**G**
• Type J	**H**
• Type K	**J**
• Type L	**K**
• Type N	**L**
• Type R	**N**
• Type S	**P**
• Type T	**Q**
Potentiometer, 4-wire	**R**

	Article No.
SITRANS TF420 Temperature transmitter with single chamber enclosure for wall or pipe mounting, two separately configurable inputs and a galvanically isolated 2-wire output.	**7NG044** ■ - ■■■■■ - 0 ■■■
CJC configuration for TC	
Input 1: None CJC; Input 2: No CJC	**0**
Input 1: Internal CJC; Input 2: Internal CJC	**1**
Input 1: External CJC; input 2: External CJC; define type in option Jxx	**2**
Input 1: External CJC; define type in option Jxx; input 2: Internal CJC	**3**
Input 1: Internal CJC; Input 2: External CJC; define type in option Jxx	**4**
Input 1: Internal CJC; Input 2: No CJC	**5**
Input 1: External CJC (define type in option Jxx); input 2: No CJC	**6**
Material of non-wetted parts	
Die-cast aluminum enclosure	**1**
Type of protection (Ex)	
General purpose	**A**
Intrinsic safety (Ex i) / Non-incendive field wiring (NIFW)	**B**
Flameproof enclosure (Ex d) / Explosion proof (XP)	**C**
Dust ignition protection by enclosure zone 21/22 (Ex t) / Dust ignition proof (DIP) / Increased safety zone 2 (Ex ec) / Non-incendive (NI)	**L**
Flameproof enclosure (Ex d) / Intrinsic safety (Ex i) / Dust ignition protection by enclosure zone 21/22 (Ex t) / Increased safety zone 2 (Ex ec)	**S**
Electrical connection/cable entries	
2x M20 x 1.5	**F**
2x ½'' NPT	**M**
Local operation	
Without local operation	**0**
Local operation (closed lid)	**1**
Local operation (lid with glass window)	**2**

© Siemens 2020

Options	Order Code
Append "**-Z**" to Article No., add order code and, if applicable, free text.	
Cable gland included	
Plastic	**A00**
Metal	**A01**
Stainless steel	**A02**
Stainless steel 316L/1.4404	**A03**
CMP, for XP devices	**A10**
CAPRI ADE 4F, CuZn, cable inner diameter 7 ... 12 mm, cable outer diameter 10 ... 16 mm	**A11**
CAPRI ADE 4F, stainless steel, cable inner diameter 7 ... 12 mm, cable outer diameter 10 ... 16 mm	**A12**
Mounting cable glands/plugs	
Cable gland mounted	**A97**
Device plug for output, mounted right	**A98**
Device options	
Degree of protection IP66 / IP68 (not for device plugs M12 and Han)	**D30**
General approval without Ex approval	
Worldwide (CE, RCM) except EAC, FM, KCC	**E00**
Explosion protection certificates	
ATEX (Europe) and IECEx (world)	**E47**
Mounting system (only single chamber enclosures)	
Pipe mounting kit for single chamber enclosure, stainless steel 316L	**H06**
Wall mounting kit for single chamber enclosure, stainless steel 316L	**H07**

© Siemens 2020

Selection and ordering data

Dual chamber enclosure

	Article No.
SITRANS TF420 Temperature transmitter with dual chamber enclosure for wall or pipe mounting, two separately configurable inputs and a galvanically isolated 2-wire output. ↗	**7NG045** ■ - ■■■■■ - 0 ■■■
↗ Click on the Article No. for the online configuration in the PIA Life Cycle Portal.	
Communication	
With HART (4 ... 20 mA)	**0**
Primary value output	
Input 1	**0**
Input 1, input 2 as redundancy (hot backup)	**1**
Input 2, input 1 as redundancy (hot backup)	**2**
Average input 1 and input 2, both as redundancy (hot backup)	**3**
Minimum input 1 and input 2, both as redundancy (hot backup)	**4**
Maximum input 1 and input 2, both as redundancy (hot backup)	**5**
Difference input 1 - input 2	**6**
Difference input 2 - input 1	**7**
Absolute difference	**8**
Input 1, type	
RTD	
• Pt100 (IEC 60751), 3-wire	**B**
• Pt100 (IEC 60751), 4-wire	**C**
• Pt1000 (IEC 60751), 3-wire	**D**
• Pt1000 (IEC 60751), 4-wire	**E**
TC	
• Type B	**F**
• Type E	**G**
• Type J	**H**
• Type K	**J**
• Type L	**K**
• Type N	**L**
• Type R	**N**
• Type S	**P**
• Type T	**Q**
Potentiometer, 4-wire	**R**
Input 2, type	
Without input 2	**A**
RTD	
• Pt100 (IEC 60751), 3-wire	**B**
• Pt100 (IEC 60751), 4-wire	**C**
• Pt1000 (IEC 60751), 3-wire	**D**
• Pt1000 (IEC 60751), 4-wire	**E**
TC	
• Type B	**F**
• Type E	**G**
• Type J	**H**
• Type K	**J**
• Type L	**K**
• Type N	**L**
• Type R	**N**
• Type S	**P**
• Type T	**Q**
Potentiometer, 4-wire	**R**

	Article No.
SITRANS TF420 Temperature transmitter with dual chamber enclosure for wall or pipe mounting, two separately configurable inputs and a galvanically isolated 2-wire output.	**7NG045** ■ - ■■■■■ - 0 ■■■
CJC configuration for TC	
Input 1: None CJC; Input 2: No CJC	**0**
Input 1: Internal CJC; Input 2: Internal CJC	**1**
Input 1: External CJC; input 2: External CJC; define type in option Jxx	**2**
Input 1: External CJC; define type in option Jxx; input 2: Internal CJC	**3**
Input 1: Internal CJC; Input 2: External CJC; define type in option Jxx	**4**
Input 1: Internal CJC; Input 2: No CJC	**5**
Input 1: External CJC (define type in option Jxx); input 2: No CJC	**6**
Material of non-wetted parts	
Die-cast aluminum enclosure	**1**
Enclosure made of stainless steel precision casting CF3M/1.4409 (similar to 316L)	**2**
Type of protection (Ex)	
General purpose (non-Ex)	**A**
Intrinsic safety (Ex i) / Non-incendive field wiring (NIFW)	**B**
Flameproof enclosure (Ex d) / Explosion proof (XP)	**C**
Dust ignition protection by enclosure zone 21/22 (Ex t) / Dust ignition proof (DIP) / Increased safety zone 2 (Ex ec) / Non-incendive (NI)	**L**
Flameproof enclosure (Ex d) / Intrinsic safety (Ex i) / Dust ignition protection by enclosure zone 21/22 (Ex t) / Increased safety zone 2 (Ex ec)	**S**
Electrical connection/cable entries	
2x M20 x 1.5	**F**
2x ½" NPT	**M**
Local operation	
Without local operation	**0**
Local operation (closed lid)	**1**
Local operation (lid with glass window)	**2**

© Siemens 2020

Options	Order Code
Append "**-Z**" to Article No., add order code and, if applicable, free text.	
Cable gland included	
Plastic	**A00**
Metal	**A01**
Stainless steel	**A02**
Stainless steel 316L/1.4404	**A03**
CMP, for XP devices	**A10**
CAPRI ADE 4F, CuZn, cable inner diameter 7 ... 12 mm, cable outer diameter 10 ... 16 mm	**A11**
CAPRI ADE 4F, stainless steel, cable inner diameter 7 ... 12 mm, cable outer diameter 10 ... 16 mm	**A12**
Cable gland accessories	
Dual hole insert included	**A20**
Mounting cable glands/plugs	
Cable gland mounted	**A97**
Device plug for output, mounted right	**A98**
Device options	
Double layer coating (epoxy resin and polyurethane) 120 µm of enclosure and lid	**D20**
Degree of protection IP66 / IP68 (not for device plugs M12 and Han)	**D30**
Stainless steel Ex plate 1.4404/316L	**D42**
General approval without Ex approval	
Worldwide (CE, RCM) except EAC, FM, KCC	**E00**
Explosion protection certificates	
ATEX (Europe) and IECEx (world)	**E47**
Mounting brackets (only dual chamber enclosure)	
Wall/pipe mounting bracket for dual chamber enclosure, steel	**H01**
Wall/pipe mounting bracket for dual chamber enclosure, stainless steel 304	**H02**
Wall/pipe mounting bracket for dual chamber enclosure, stainless steel 316L	**H03**

Accessories

	Article No.
Additional accessories for assembly, connection and transmitter configuration, see page 2/251.	
Modems	
Modem with USB interface and SIPROM T software	**7NG3092-8KN**
HART modem with USB interface	**7MF4997-1DB**
Thread adapter	
Thread adapter M20x1.5 (male thread) to ½-14 NPT (female thread)	**7MP1990-0BA00**
Thread adapter M20x1.5 (male thread) to G½ (female thread)	**7MP1990-0BB00**
Local operation	
Local operation for temperature transmitter in dual chamber enclosure	**7MF7902-1AD**
Mounting system for local operation 7MF7902-1AD in single chamber enclosure	**7MF7902-1AS**
Mounting brackets (only dual chamber enclosure)	
Wall/pipe mounting bracket for dual chamber enclosure, steel, 5/16-24UNF	**7MF7900-1AB**
Wall/pipe mounting bracket for dual chamber enclosure, steel, M8	**7MF7900-1AC**
Wall/pipe mounting bracket for dual chamber enclosure, stainless steel 316L, 5/16-24UNF	**7MF7900-1AH**
Wall/pipe mounting bracket for dual chamber enclosure, stainless steel 316L, M8	**7MF7900-1AJ**
Mounting system (only single chamber enclosures)	
Pipe mounting kit for single chamber enclosure, stainless steel 316L	**7MF7900-1AK**
Wall mounting kit for single chamber enclosure, stainless steel 316L	**7MF7900-1AL**
Cable gland	
Cable gland, gray, non-Ex, M20	**7MF7906-1AB**
Cable gland, gray, non-Ex, NPT	**7MF7906-1BB**
Cable gland, metal, non-Ex, NPT	**7MF7906-1BD**
Cable gland, metal, non-Ex, M20	**7MF7906-1AD**
Cable gland, metal, Ex-d, NPT	**7MF7906-1BE**
Cable gland, metal, Ex-d, M20	**7MF7906-1AE**
Cable gland, 316L, non-Ex, NPT	**7MF7906-1BH**
Cable gland, 316L, non-Ex, M20	**7MF7906-1AH**
Cable gland, 316L, Ex-d, NPT	**7MF7906-1BJ**
Cable gland, 316L, Ex-d, M20	**7MF7906-1AJ**
Cable gland, E1FX Tri-Star 1/2-14NPT, CMP	**7MF7906-1NE**
Cable gland, ½ NPT Capri ADE 4F cpl., CuZn	**7MF7906-1PE**
Cable gland, ½ NPT Capri ADE 4F cpl., stainless steel	**7MF7906-1PJ**
Dual hole gasket for 2 cables in cable gland	**7MF7906-1WN**

© Siemens 2020

SITRANS TF420 (HART, universal)

	Article No.
Plug and cable socket	
Plug Han 7D, plastic, straight	**7MF7906-2AB**
Plug Han 7D, plastic, angled	**7MF7906-2AC**
Plug Han 7D, metal, straight, blue	**7MF7906-2AQ**
Plug Han 7D, metal, straight, grey	**7MF7906-2AN**
Plug Han 7D, metal, angled, blue	**7MF7906-2AR**
Plug Han 7D, metal, angled, grey	**7MF7906-2AP**
Plug Han 8D, plastic, straight	**7MF7906-2EB**
Plug Han 8D, plastic, angled	**7MF7906-2EC**
Plug Han 8D, metal, straight, blue	**7MF7906-2EQ**
Plug Han 8D, metal, straight, grey	**7MF7906-2EN**
Plug Han 8D, metal, angled, blue	**7MF7906-2ER**
Plug Han 8D, metal, angled, grey	**7MF7906-2EP**
Cable socket, plastic, for plug Han 7D	**7MF7906-2BB**
Cable socket, plastic, for plug Han 8D	**7MF7906-2FB**
Cable socket, metal, for Han 7D blue	**7MF7906-2BQ**
Cable socket, metal, for Han 8D blue	**7MF7906-2FQ**
Cable socket, metal, for Han 7D grey	**7MF7906-2BN**
Cable socket, metal, for Han 8D grey	**7MF7906-2FN**
Plug M12 with cable socket, stainless steel	**7MF7906-3AB**
Overvoltage protection	
Overvoltage protection up to 20 kV, M20	**7MF7906-3AC**
Overvoltage protection up to 20 kV, NPT	**7MF7906-3AD**
Lid	
Closed lid aluminum, painted 2x, without glass window, with seal NBR	**7MF7901-1BB**
Closed lid aluminum, painted 2x, without glass window, with seal FVMQ	**7MF7901-1BC**
Lid aluminum 2x coated, with glass window, with seal NBR	**7MF7901-1BG**
Lid aluminum 2x coated, with glass window, with seal FVMQ	**7MF7901-1BH**
Closed lid stainless steel precision casting, without glass window, with seal NBR	**7MF7901-2AB**
Closed lid stainless steel precision casting, without glass window, with seal FVMQ	**7MF7901-2AC**
Lid stainless steel precision casting, with glass window, with seal NBR	**7MF7901-2AG**
Lid stainless steel precision casting, with glass window, with seal FVMQ	**7MF7901-2AH**

Ordering example

SITRANS TF420 (single chamber enclosure)

7NG0450-0BA02-0AF2-Z Y01+Y17+P10

Y01: -10 ... +100 °C (32 ... 212 °F)

Y17: TICA123

Factory setting

- Input 1: Pt100 (IEC 751); 3-wire connection
- Input 2: not configured (inactive)
- Measuring range: 0 ... 100 °C (32 ... 212 °F)
- Fault current
  - Input circuit wire break: 22.8 mA
  - Input circuit short circuit: 22.4 mA
  - Input circuit drift: 22 mA (active when input 2 is active)
  - Input monitoring wire break and short-circuit
- No trimming of input and output (offset)
- Damping 0.0 s

© Siemens 2020

Dimensional drawings

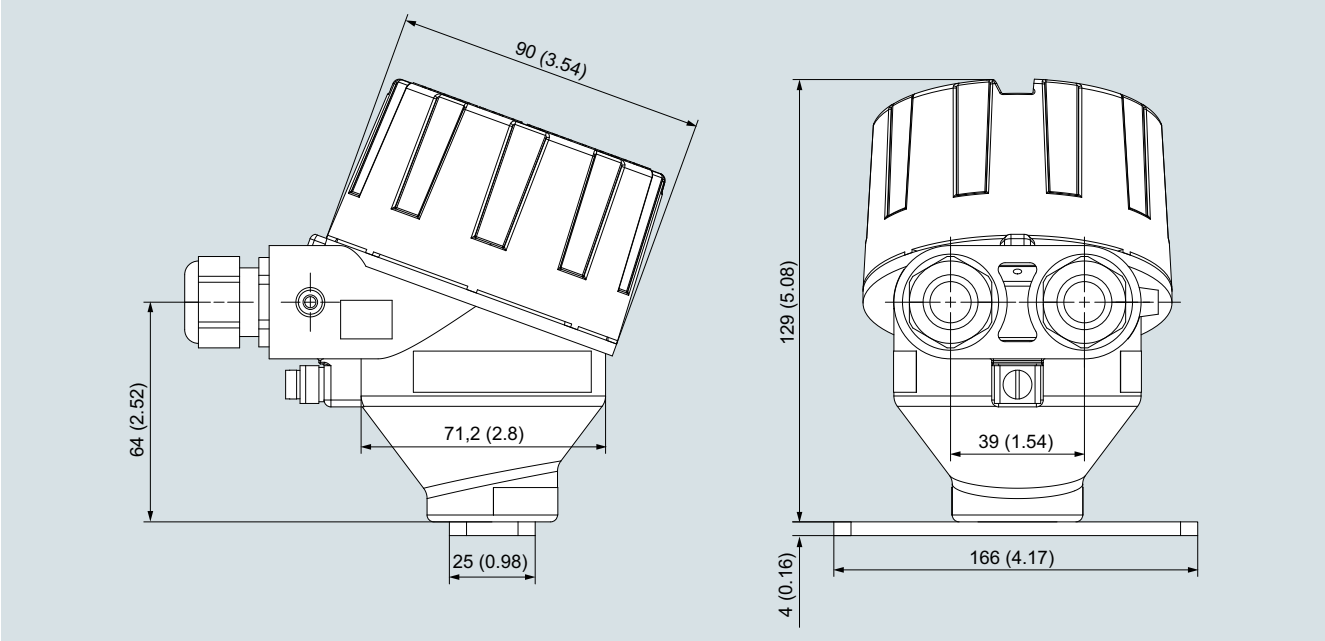

SITRANS TF420, single chamber enclosure, dimensions in mm (inch)

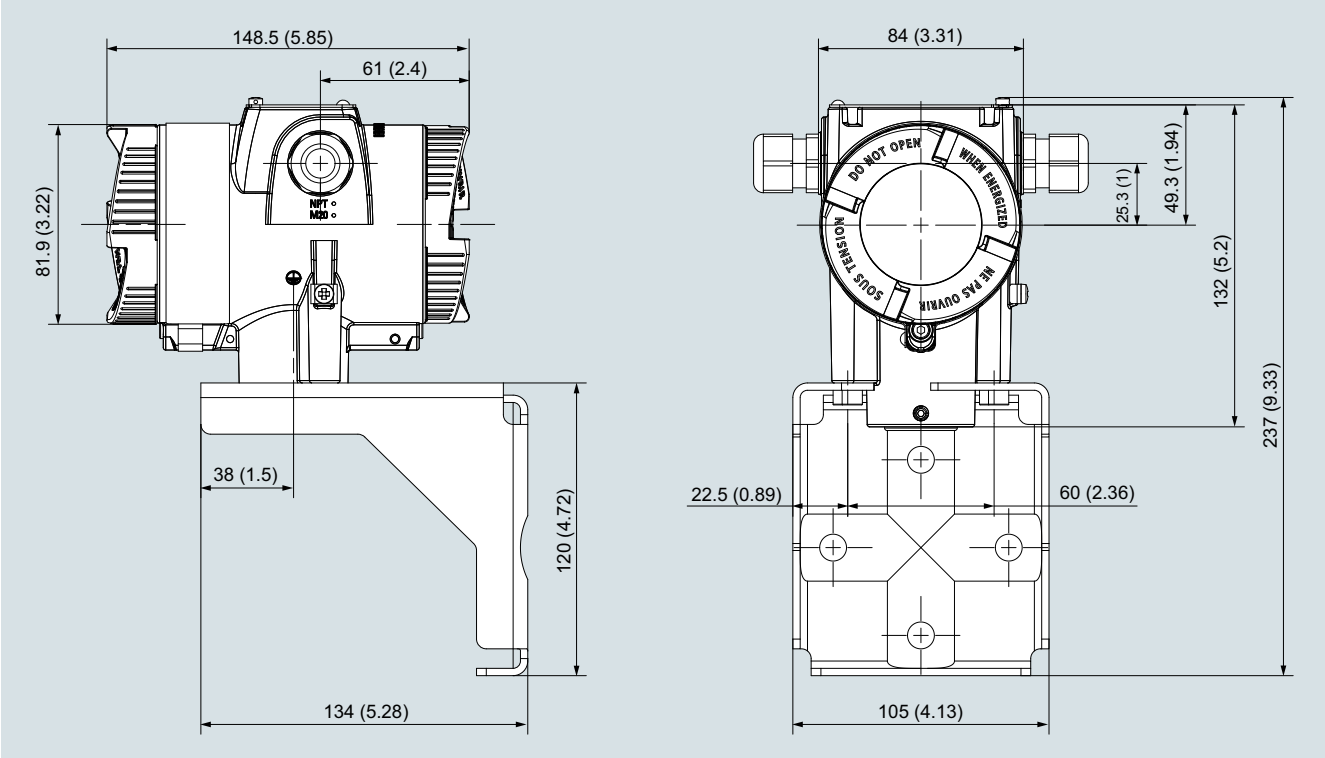

SITRANS TF420, dual chamber enclosure, dimensions in mm (inch)

© Siemens 2020

Circuit diagrams

Connections

Input connection

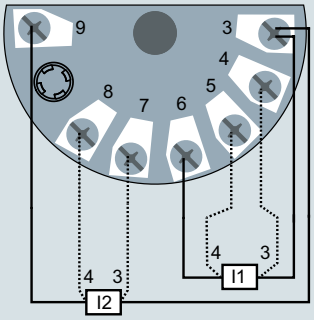

Input 1 and/or input 2:
2-wire, 3-wire or 4-wire RTD or
linear resistance

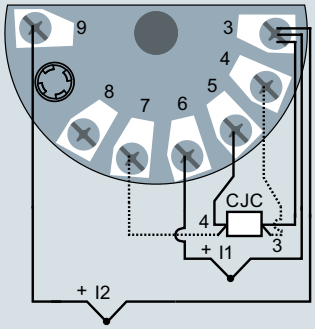

Input 1 and/or input 2:
TC (internal CJC or
external 2-wire, 3-wire or
4-wire CJC)

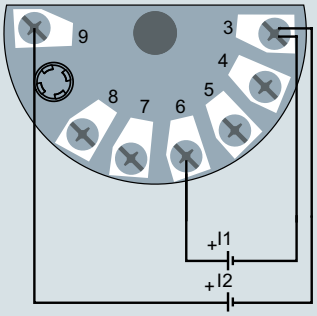

Input 1 and/or input 2:
Voltage input
(unipolar or bipolar)

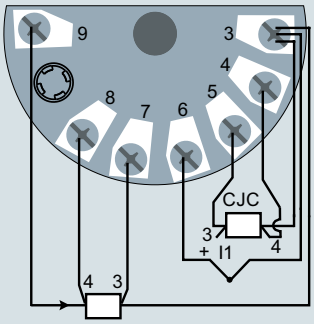

Input 1: TC (internal CJC or
external 2-wire or 3-wire CJC)
Input 2: 2-wire, 3-wire or 4-wire RTD

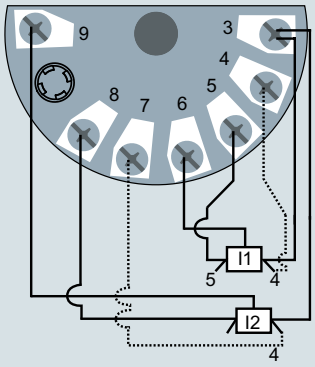

Input 1 and/or Input 2:
3-wire or 4-wire potentiometer

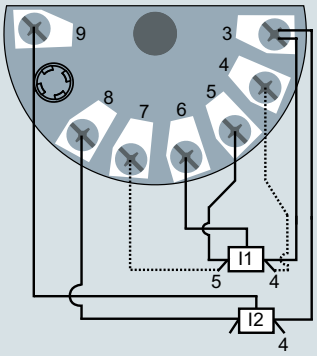

Input 1: 5-wire potentiometer
Input 2: 3-wire potentiometer

SITRANS TF420 in single chamber enclosure (7NG044*), input connection assignment

© Siemens 2020

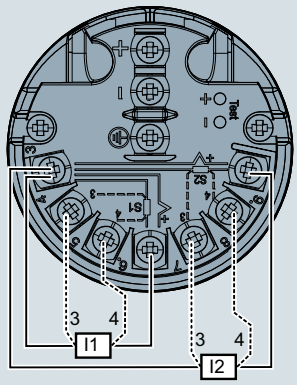

Input 1 (I1) and/or input 2 (I2):
2-wire, 3-wire or 4-wire RTD or
linear resistance

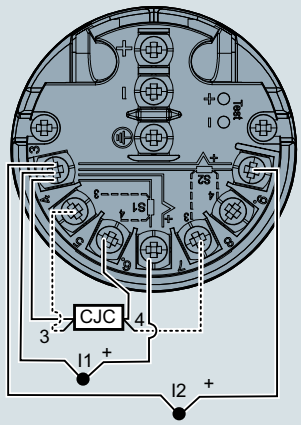

Input 1 (I1) and/or input 2 (I2):
TC (internal CJC or
external 2-wire, 3-wire or
4-wire CJC)

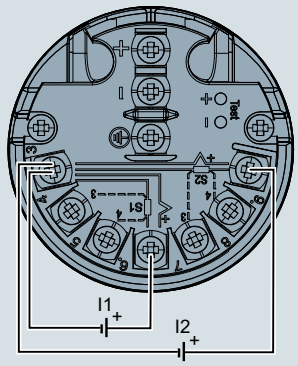

Input 1 (I1) and/or input 2 (I2):
Voltage input
(unipolar or bipolar)

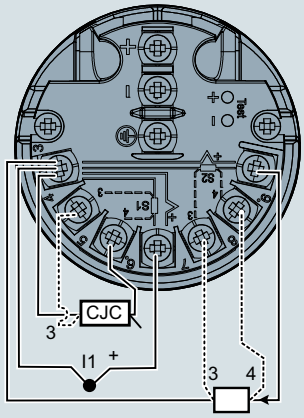

Input 1: TC (internal CJC or
external 2-wire or 3-wire CJC)
Input 2: 2-wire, 3-wire or 4-wire RTD

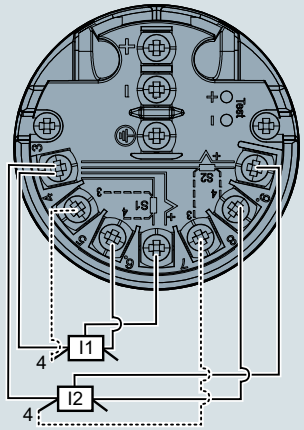

Input 1 (I1) and/or input 2 (I2):
3-wire or 4-wire potentiometer

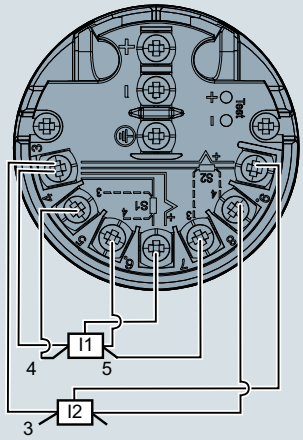

Input 1 (I1): 5-wire potentiometer
Input 2 (I2): 3-wire potentiometer

SITRANS TF420 in dual chamber enclosure (7NG045*), input connection assignment

Output connection

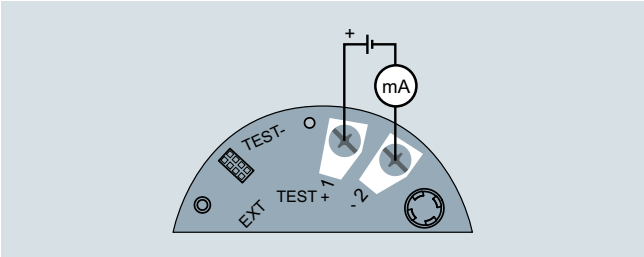

SITRANS TF420 in single chamber enclosure (7NG044*), output connection assignment

© Siemens 2020

SITRANS TO500, multipoint temperature transmitter

Overview

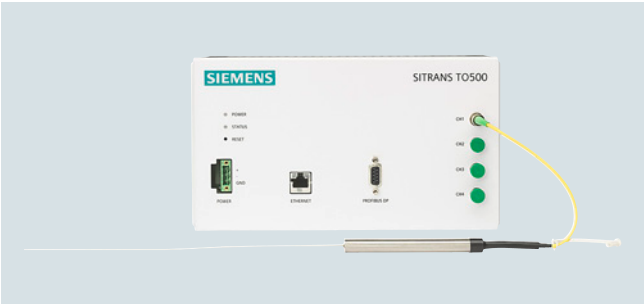

SITRANS TO500 is a multipoint temperature transmitter for measuring temperatures and temperature profiles with fiber-optic multipoint measuring lances.

Benefits

- Evaluation of a large number of sensors (Fiber Bragg Grating (FBG)) in one temperature transmitter
- Low space requirements of the multipoint measuring lance
- 4 multipoint measuring lance channels per temperature transmitter
- Easy to install
- PROFIBUS DP - Simple integration into control system
- Fast response to temperature changes
- Exact, no recalibration required due to internal reference
- Also suitable for high process temperatures

Application

SITRANS TO500 is used for evaluating a high number of sensors that are arranged on a fiber-optic multipoint measuring lance.

Up to 4 multipoint measuring lances, each with as many as 48 sensors (Fiber Bragg Grating (FBG)), can be simultaneously processed by one SITRANS TO500.

Accurate and fast determination of temperature profiles enables process optimization in terms of service life, quality and output.

Locations of excessive temperature rise are quickly and accurately detected, thereby preventing damage to the process, equipment and environment.

Wherever temperature profiles must be determined and installation space is limited, the SITRANS TO500 with fiber-optic temperature measurement is the right choice.

Design

The SITRANS TO500 multipoint temperature transmitter is located in the control cabinet in a compact aluminum enclosure for mounting onto DIN rails.

The connectors are easy to access on the front:

- 4 x connector for multipoint measuring lances
- 1 x connector for power supply
- 1 x connector PROFIBUS DP
- 1 x connector Ethernet

The status displays are also located on the front.

Mode of operation

In the SITRANS TO500 multipoint temperature transmitter, light with a wavelength from 1 500 to 1 600 nm is generated with a continuously adjustable laser and decoupled to the multipoint measuring lance. Fiber Bragg Gratings (FBG) are mounted at freely defined points on the multipoint measuring lances. Each FBG reflects light of a defined wavelength. The wavelength reflected by the FBG varies depending on the temperature. The reflection at the FBGs is thus a measurement of the temperature at the corresponding measuring point. A maximum of 48 FBGs per channel can be evaluated, depending on the temperature range.

A gas cell with fixed absorption line serves as a reference in the SITRANS TO500 and the wavelength determination is continuously adjusted by it.

Function

The SITRANS TO500 has 4 channels which are evaluated simultaneously. The wavelength reflected at each sensor in the multipoint measuring lance depends on the temperature, and this wavelength is output in the multipoint temperature transmitter. All 4 channels are read at the same time and updated once per second. The temperature can be determined and displayed accurately at up to 48 sensors per channel. The positions of the sensors can be specified by the customer. This leads to a flexible and application-specific solution for the customer.

The measured temperatures are transferred to the control system by PROFIBUS DP. The parameters of the SITRANS TO500 are set via the integrated Ethernet interface.

© Siemens 2020

Technical specifications

Input	
Channels	4
Measured variable	Temperature
Input type	max. 48 sensors (FBGs) per channel
Characteristics	Temperature-linear
Resolution	0.1 K
Measuring accuracy	< 0.5 K
Repeatability	< 0.5 K
Measuring cycle	1 s
Measuring range	-180 ... +800 °C (-292 ... +1472 °F) depending on the multipoint measuring lance
Unit	°C
Power supply	24 V DC + 20%
Power consumption	Max. 15 W
Protection	Against reverse polarity
Measuring velocity • Measurement rate	 1 Hz independent of the number of APCBs
Output	
Output signal	PROFIBUS DP
Optical power	≤ 1 mW per channel
Laser protection class	Class 1
Rated conditions	
Ambient conditions • Ambient temperature • Storage temperature • Relative humidity • Electromagnetic compatibility	 0 ... 50 °C (32 ... 122 °F) -40 ... +85 °C (-40 ... +185 °F) < 80%, non condensing at 50 °C (122 °F) According to EN 61326 and NAMUR NE21
Degree of protection to EN 60529 • Enclosure	 IP20
Design	
Weight	2.4 kg (5.3 lb)
Dimensions	See "Dimensional drawings"
DIN rail adapter	Rear-mounted
Material	Aluminum
Displays and control elements	
LEDs	• "Power-on" (continuous light) • "Status" (flashing during startup; otherwise continuous light)
Pushbutton	"Reset" (system restart or address reset)

Selection and Ordering data

	Article No.
SITRANS TO500 **multipoint temperature transmitter** Communication: PROFIBUS DP Channels: 4 Power supply: 24 V DC Optical connection: FC/APC plug Enclosure: Aluminum, IP20	**7NG9551-4AA00-0AA0**

© Siemens 2020

Dimensional drawings

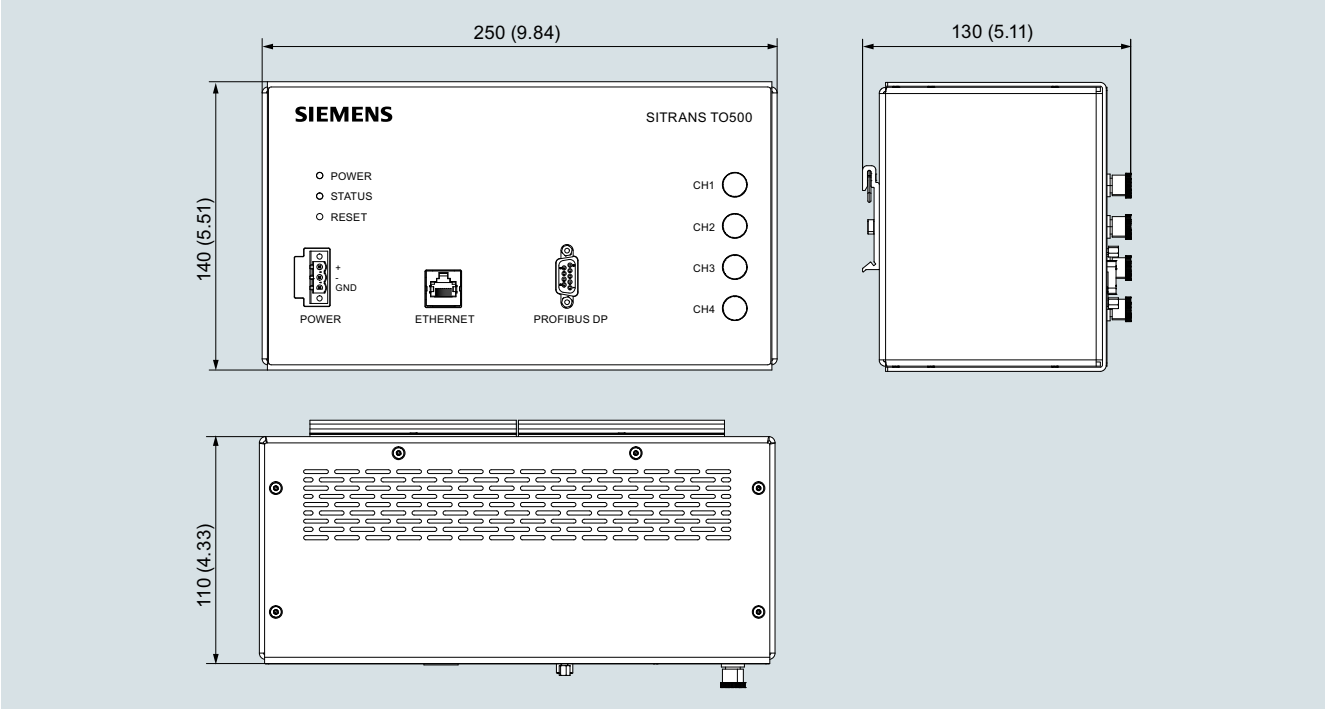

SITRANS TO500, front, rear and side view; dimensions in mm (inch)

Circuit diagrams

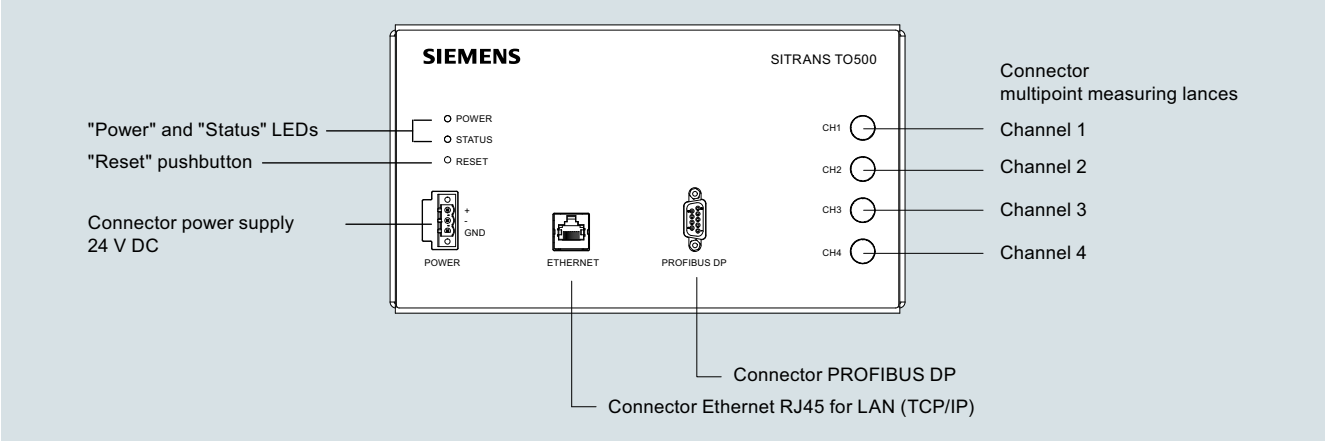

SITRANS TO500, connector assignment

© Siemens 2020

Overview

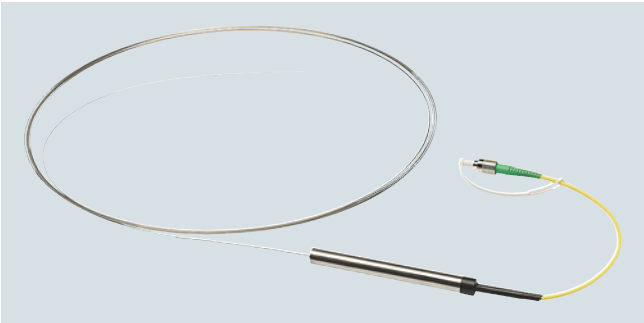

The SITRANS TO multipoint measuring lance for measuring temperatures and temperature profiles using fiber-optic Fiber Bragg Grating (FBG).

Benefits

- Fast response to temperature changes
- Easy to install
- Low space requirements
- Freely selectable sensor arrangement (≤ 20 sensors per multipoint measuring lance)
- Freely selectable measuring lance length (≤ 20 m/787 inch)
- Also suitable for high process temperatures (≤ 450 °C/842 °F)

Application

The SITRANS TO multipoint measuring lance is used for measuring temperatures determined using fiber-optic Fiber Bragg Gratings.

Up to 20 temperature sensors can be arranged on a multipoint measuring lance simultaneously. Depending on the process, the position of the sensor points can be freely selected; minimum distance is 50 mm (2 inch).

Design

The SITRANS TO multipoint measuring lance consists of an optical fiber to which the Fiber Bragg Grating has been applied with a laser.

The fiber is surrounded by a stainless steel capillary.

The multipoint measuring lance is inserted into the measurement environment in a thermowell on the process side, e.g. reactor, vessel.

Mode of operation

From the supplied light with a wavelength range of 1500 to 1600 nm, each grid in the fiber reflects a value that is specific for the position and the temperature. This specific value is evaluated in the SITRANS TO500 multi-point temperature transmitter.

Function

Accurate and fast determination of temperature profiles enables process optimization in terms of service life, quality and output.

Local overheating is detected quickly and precisely located, thereby preventing damage to the process, equipment and environment.

Wherever temperature profiles must be determined and installation space is limited, the SITRANS TO500 and fiber-optic temperature measurement are the right choice.

Integration

Connection to SITRANS TO500 is made via single-mode patch cable.

© Siemens 2020

Technical specifications

Input	
Measured variable	Temperature
Measuring system	FBG sensors
Working area	1 500 ... 1 600 nm
Resolution	0.1 K
Measuring accuracy	< 1 K or 1% of measuring span; the larger value applies
Repeatability	< 0.5 K
Measuring range	-40 ... +450 °C (-40 ... +842 °F), other ranges on request
Number of sensors	1 ... 20; maximum number depending on the measuring range, numbers > 20 on request
Response time (T0.9)	
• Multipoint measuring lance without thermowell	< 2 s
• Multipoint measuring lance with thermowell, stainless steel, wall thickness 1 mm; example:	
- Outer diameter 3 mm	18 s
- Outer diameter 6 mm	43 s
Rated conditions	
Ambient conditions	
• Ambient temperature	-20 ... +80 °C (-4 ... +176 °F)
• Storage temperature	-40 ... +85 °C (-40 ... +185 °F)
• Operation	Vertically extended or horizontally (+1 K measuring error)
• Relative humidity	5 ... 95 %
• Condensing moisture	Not permitted
Bending radius of the multipoint measuring lance during transportation and installation	> 500 mm (19.7 inch); briefly 250 mm (9.8 inch)
Other conditions	Avoid direct contact of the sensor with aggressive and corroding chemicals such as halogens, NO_X and SO_X
IP degree of protection (handpiece and multipoint measuring lance without connectors)	IP67
Pigtail	
• Bending radius	> 60 mm (2.4 inch)
• Tensile force	< 5 N
Design	
Weight	60 g (0.13 lb) + 2 g/m + 0.0044 lb/m)
Connectors	FC/APC Clean with a suitable cleaning agent before connecting. Close with cap if not in use.
Capillary material	AISI 316L
Dimensions	See "Dimensional drawings"
• Length	0.1 … 20 m (3.9 … 787 inch)
• Diameter	0.8 mm (0.031 inch)
Thermowell inside diameter (recommended)	
• Measuring lance < 2 m (79 inch)	≥ 2 mm (0.0787 inch)
• Measuring lance < 5 m (197 inch)	≥ 3 mm (0.118 inch)
• Measuring lance < 10 m (394 inch)	≥ 4 mm (0.157 inch)
• Measuring lance > 10 m (394 inch)	≥ 6 mm (0.236 inch)
Distance from last sensor to tip of multipoint measuring lance	10 mm (0.39 inch)
Length of sensor point	6 mm (0.236 inch)
Positioning accuracy of sensor	±3 mm (0.118 inch)
Distance between 2 sensors	> 50 mm (2 inch); smaller on request
Length FOC connection to the transmitter	10 000 m (39 3701 inch)

Displays and control elements	
Displays and buttons	
• Without	
Installation instructions	
Mechanical shock	Avoid mechanical shocks to the multipoint measuring lance, such as: Falls from heights > 0.5 m (19.7 inch) or whipping and/or snapping of the capillaries.
Concentrated pressure	Avoid concentrated pressure on the capillaries. For example, do not hold with pliers or other similar tools. After several hours at an ambient temperature > 250 °C (482 °F), the steel loses its elasticity.
Removal and reinstallation	Extreme caution must be exercised during transport, storage and installation if removing or reinstalling. The multipoint measuring lance is irreversibly damaged at temperatures > 550 °C (1 022 °F).

© Siemens 2020

Selection and ordering data

	Article No.	Order code
SITRANS TO multipoint measuring lance (coating: stainless steel) ↗	**7MC7700-** ■■■■-■■■■	■■■
↗ Click on the Article no. for the online configuration in the PIA Life Cycle Portal.		
Number of sensors		
1	**0 A**	
2	**0 B**	
3	**0 C**	
4	**0 D**	
5	**0 E**	
6	**0 F**	
7	**0 G**	
8	**0 H**	
9	**0 J**	
10	**0 K**	
11	**0 L**	
12	**0 M**	
13	**0 N**	
14	**0 P**	
15	**0 Q**	
16	**0 R**	
17	**0 S**	
18	**0 T**	
19	**0 U**	
20	**0 V**	
Customer-specific design: Add order code; enter number of sensors and high temperature limit in plain text.	**9 X**	**H 1 Y**
Installation length U; customer-specific		
0.1 m < U ≤ 2 m (4 inch < U ≤ 79 inch)	**A**	
2 m < U ≤ 4 m (79 inch < U ≤ 157.5 inch)	**B**	
4 m < U ≤ 6 m (157.5 inch < U ≤ 236 inch)	**C**	
6 m < U ≤ 8 m (236 inch < U ≤ 315 inch)	**D**	
8 m < U ≤ 10 m (315 inch < U ≤ 394 inch)	**E**	
10 m < U ≤ 12 m (394 inch < U ≤ 472 inch)	**F**	
12 m < U ≤ 14 m (472 inch < U ≤ 551 inch)	**G**	
14 m < U ≤ 16 m (551 inch < U ≤ 630 inch)	**H**	
16 m < U ≤ 18 m (630 inch < U ≤ 709 inch)	**J**	
18 m < U ≤ 20 m (709 inch < U ≤ 787 inch)	**K**	
Customer-specific design: Add order code and specify required length in plain text.	**X**	**Y 4 4**
High temperature limit		
100 °C (212 °F)	**1 0**	
150 °C (302 °F)	**1 1**	
200 °C (392 °F)	**1 2**	
250 °C (482 °F)	**1 3**	
300 °C (572 °F)	**1 4**	
350 °C (662 °F)	**1 5**	
400 °C (752 °F)	**1 6**	
450 °C (842 °F)	**1 7**	
Customer-specific design	**8 8**	

	Article No.	Order code
SITRANS TO multipoint measuring lance (coating: stainless steel)	**7MC7700-** ■■■■-■■■■	■■■
Optical connector		
FC/APC connector	**0**	
Mechanically reinforced connector	**1**	
Connecting cable length LC		
LC = 200 mm for standard connection	**B**	
0.2 m < LC ≤ 2 m (define precise length in option Y45)	**C**	
Customer-specific design (LC > 2 m): Add order code and specify required length in plain text.	**Z**	**P 1 Y**
Temperature measurement range		
100 K	**A**	
150 K	**B**	
200 K	**C**	
250 K	**D**	
300 K	**E**	
350 K	**F**	
400 K	**G**	
500 K	**H**	
Customer-specific design: Add order code and specify required temperature measuring range in plain text.	**Z**	**Q 1 Y**
Wavelength bandwidth distribution		
Without (no color code; 1 multipoint measuring lance per channel)	**0**	
Dual split (2 multipoint measuring lances per channel)		
• 1 500 ... 1 550 nm (white color code; multipoint measuring lance 1 of 2)	**1**	
• 1 551 ... 1 600 nm (black color code; multipoint measuring lance 2 of 2)	**2**	
Quad split (4 multipoint measuring lances per channel)		
• 1 500 ... 1 525 nm (blue color code; multipoint measuring lance 1 of 4)	**3**	
• 1 526 ... 1 550 nm (red color code; multipoint measuring lance 2 of 4)	**4**	
• 1 551 ... 1 575 nm (green color code; multipoint measuring lance 3 of 4)	**5**	
• 1 576 ... 1 600 nm (yellow color code; multipoint measuring lance 4 of 4)	**6**	
Customer-specific design: Add order code and specify required number of multipoint measuring lances per channel in plain text.	**9**	**R 1 Y**

© Siemens 2020

SITRANS TO, multipoint measuring lance

Options	Order code
Append suffix "**-Z**" to article no., add order code and plain text, if applicable.	
Sensors	
Working temperature of high temperature limit < 100 °C (212 °F)	**Y02**
Tag plate	
Tag plate	**Y15**
Lengths	
Customer-specific installation length (in m)	**Y44**
Customer-specific length of the connecting cable (in m)	**Y45**
Special versions	
Description of the special version	**Y98**
Reference/offer no. - application data sheet with sensor positioning	**Y99**

Dimensional drawings

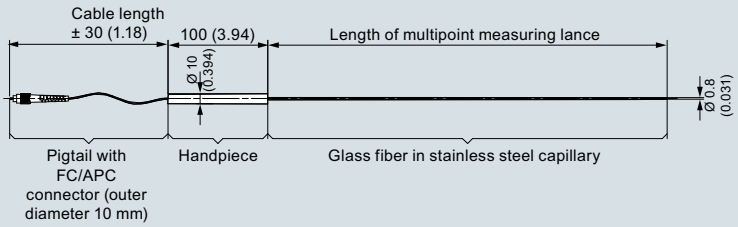

SITRANS TO multipoint measuring lance with FC/APC connector, pigtail and handpiece; dimensions in mm (inch)

© Siemens 2020

Overview

Additional accessories for assembly, connection and transmitter configuration

- Transmitter configuration for SITRANS TH / TR / TF and SITRANS TS
- Cable glands and adapters for SITRANS TF and SITRANS TS
- Lightning protection for SITRANS TF (SITRANS TS on request)
- Connectors for SITRANS TF and SITRANS TS
- Indicator for SITRANS TS500
- Connection and mounting accessories for SITRANS TH
- Connection and mounting accessories for field transmitter SITRANS TF
- Measurement inserts for SITRANS TS500 Measurement inserts: see SITRANS TSinsert.
- Connection heads type B for SITRANS TS500 (accessory resistance thermometer)
- Enclosure gaskets for SITRANS TS500
- Connection heads type A and accessories for straight thermocouples
- Installation accessories for connection heads for straight thermocouples

Selection and ordering data

Transmitter configuration for SITRANS TH / TR / TF and SITRANS TS

	Article No.
Modems	
Modem with USB interface and SIPROM T software for; 4 ... 20 mA: • With USB connection • For SITRANS TH100, TH200, TH320, TR200, TR320, TF320, TF420 and TF, with TH200	**7NG3092-8KN**
Modem with USB interface for all HART devices: • With USB connection • For SITRANS TH300, TH320, TH420, TR300, TR320, TR420, TF320, TF420,TF in HART	**7MF4997-1DB**
SIMATIC PDM parameter assignment software for: SITRANS TH300, TR300, TH400, TF320, TF420, TF in HART / PROFIBUS PA / FOUNDATION Fieldbus	**siehe Kap. 8**

Cable glands and adapters for SITRANS TF and SITRANS TS

	Article No.
M20 x 1.5 nickel-plated brass; with Ex-d approval	**7MF4997-2FR**
½-NPT nickel-plated brass; with Ex-d approval	**7MF4997-2FU**
CAPRI screw connection M20 x 1.5 nickel-plated brass; with Ex-d approval	**7MF4997-2LA**
CAPRI screw connection, M20 x 1.5 stainless steel; with Ex-d approval	**7MF4997-2LB**
CAPRI screw connection ½-14 NPT nickel-plated brass; with Ex-d approval	**7MF4997-2LC**
CAPRI screw connection ½-14 NPT stainless steel; with Ex-d approval	**7MF4997-2LD**
Threaded adapter M20 x 1.5 (male thread) to ½-14 NPT (female thread)	**7MP1990-0BA00**
Threaded adapter M20 x 1.5 (male thread) to G½ (female thread)	**7MP1990-0BB00**

Lightning protection for SITRANS TF (SITRANS TS on request)

	Article No.
Transient protector M20 x 1.5 (lightning protection)	**7MF4997-2DU**
Transient protector ½-14 NPT (lightning protection)	**7MF4997-2DV**

Selection and ordering data

Plug for SITRANS TF and SITRANS TS

	Article No.
Han 7D plug made of plastic	**7MF4997-2FB**
Han 7D plug made of metal	**7MF4997-2FC**
M12 socket angled for 4 ... 6 mm cable diameter -25 ... +85 °C (-13 ... 185 °F)	**3RK1902-4CA00-4AA0**

Indicator for SITRANS TS500

	Article No.
Digital indicator loop-powered HW05 for SITRANS TS500	**A5E33119275**

Connection and mounting accessories for SITRANS TH

	Article No.
Mounting rail adapter for head transmitter (order quantity: 5 units)	**7NG3092-8KA**
Connecting cable 4-wire, 200 mm (7.87 inch), for input connections when using head transmitters in the high hinged cover (set with 5 units)	**7NG3092-8KC**

Connection and mounting accessories for field transmitter SITRANS TF

	Article No.
Mounting bracket and fastening parts	
Made of steel for 7NG313. -..B.. and 7MP1110	**7MF4997-1AC**
Made of steel for 7NG313 . -..C..	**7MF4997-1AB**
Made of stainless steel 304 for 7NG313. -..B.. and 7MP1110	**7MF4997-1AJ**
Made of stainless steel 304 for 7NG313. -..C..	**7MF4997-1AH**
Made of stainless steel 316L for 7NG313. -..B..	**7MF4997-1AQ**
Made of stainless steel 316L for 7NG313. -..C..	**7MF4997-1AP**
Digital indicator for SITRANS TF[1)]	**7MF4997-1BS**
Connection board for SITRANS TF	**A5E02391790**
Lid, die-cast aluminum, without inspection window	**7MF4997-1BB**
Lid, die-cast aluminum, with inspection window	**7MF4997-1BE**

1) Retrofitting not possible with Ex devices.

© Siemens 2020

Selection and ordering data

Measuring inserts for SITRANS TS500

For measurement inserts, see SITRANS TSinsert page 2/100.

Connection heads type B for SITRANS TS500 (accessory resistance thermometer)

	Article No.
Degree of protection IP54	
Connection head type: similar to BA0; aluminum; flange cover	**7MC1907-1BA**
Connection head type: similar to BM0; plastic; screw cover	**7MC1907-1BK**
Degree of protection IP65	
Connection head type: similar to BB0; aluminum; small spring flap	**7MC1907-1BF**
Connection head type: similar to BC0; aluminum; high spring flap	**7MC1907-1BL**
Connection head type: B-VA, stainless steel	**7MC1907-1BV**
Quick-release lock for connection heads BB0, BC0, degree of protection of connection head reduced to IP20, weight: 0.02 kg (0.04 lb)	**7MC1907-1BS**

Spare parts/enclosure gaskets for SITRANS TF320/TF420 and SITRANS TS500

	Article No.
Lid gasket SITRANS TF320/TF420 single chamber enclosure as well as for SITRANS TS500 housing AG0, AV0, AU0, AV0	**7MF7901-3AB**

Connection heads type A and accessories for straight thermocouples

Metal thermowells for straight thermocouples according to EN 50446

	Article No.
X 10 CrAl 24, material no. 1.4762	
∅ 22 x 2 mm (∅ 0.87 x 0.08 inch), 0.55 ... 1.10 kg (1.21 ... 2.42 lb), dished	
Nominal length/thermowell length in mm (inch):	
• 500 (19.7)/520 (20.5)	**7MC2900-1DA**
• 710 (28.0)/730 (28.7)	**7MC2900-2DA**
• 1 000 (39.4)/1 020 (40.2)	**7MC2900-3DA**
X 18 CrN28, material no. 1.4749	
∅ 26 x 4 mm (∅ 1.02 x 0.16 inch), 1.25 ... 2.20 kg (2.76 ... 4.85 lb), dished	
Nominal length/thermowell length in mm (inch):	
• 500 (19.7)/520 (20.5)	**7MC2900-1EC**
• 710 (28.0)/730 (28.7)	**7MC2900-2EC**
• 1 000 (39.4)/1 020 (40.2)	**7MC2900-3EC**
X 15 CrNiSi 25 20, material no. 1.4841	
∅ 22 x 2 mm (∅ 0.87 x 0.08 inch), 1.05 kg (2.31 lb), dished	
Nominal length/thermowell length in mm (inch):	
• 1 000 (39.4)/1 020 (40.2)	**7MC2900-3FA**
CrAl 205 (Kantal AF), material no. 1.4767	
∅ 22 x 2 mm (∅ 0.87 x 0.05 inch), 0.55 ... 1.10 kg (1.21 ... 2.42 lb)	
Nominal length/thermowell length in mm (inch):	
• 500 (19.7)/520 (20.5)	**7MC2900-1HA**
• 710 (28.0)/730 (28.7)	**7MC2900-2HA**
• 1 000 (39.4)/1 020 (40.2)	**7MC2900-3HA**

Thermocouple elements for straight thermocouples according to EN 50446

	Article No.
Base thermocouple with isolating pipe	
Wire diameter 3 mm (0.12 inch) Ni Cr/Ni, up to 1 000 °C (max. 1 300 °C), (up to 1 832 °F (max. 2 372 °F)) 0.55 ... 2.10 kg (1.21 ... 4.63 lb)	
Nominal length *L1*/Thermowell length *L2* in mm (inch):	
• 500 (19.7)/540 (21.3)	**7MC2903-1CA**
• 710 (28.0)/750 (29.5)	**7MC2903-2CA**
• 1 000 (39.4)/1 040 (40.9)	**7MC2903-3CA**

Connection heads for straight thermocouples

	Article No.
Connection head, type A (without terminal base and terminals), 1 cable entry, degree of protection IP53, 0.35 kg (0.77 lb)	
Light metal casting, screw-on cover, for thermowell diameter in mm (inch) (hole = thermowell diameter +0.5 mm) (0.02 inch)	
• 22 (0.87)	**7MC2905-1AA**
• 26 (1.02)	**7MC2905-1BA**
Light metal, high spring flap, for thermowell diameter in mm (inch) (hole = thermowell diameter +0.5 mm) (0.02 inch)	
• 22 (0.87)	**7MC2905-4AA**
• 26 (1.02)	**7MC2905-4BA**

Installation accessories for connection heads for straight thermocouples

- Terminal base
- Terminal
- Sealing rings
- Washer
- Stop flange
- Threaded sleeve

	Article No.
Terminal base without terminals for base thermocouples; 0.06 kg (0.13 lb)	**7MC2998-1AA**
Terminal for base thermocouples; 0.01 kg (0.02 lb)	**7MC2998-1BA**
Set of sealing rings (100 units) for the lid of the connection head; 0.01 kg (0.02 lb)	**7MC2998-1CA**
Set of washers (100 units) for the terminal base; 0.01 kg (0.02 lb)	**7MC2998-1CB**
Stop flange, adjustable, from GTW	
For thermowell outer diameter 22 mm (0.87 inch); 0.35 kg (0.77 lb)	**7MC2998-2CB**
For thermowell outer diameter 26 mm (1.02 inch); 0.32 kg (0.71 lb)	**7MC2998-2CC**
Threaded sleeve, gas-tight up to 1 bar (14.5 psi), adjustable, material no. 1.0718, with seal; 0.40 kg (0.88 lb)	
For thermowell outer diameter 22 mm (0.87 inch), **G1**	**7MC2998-2DB**
For thermowell outer diameter 26 mm (1.02 inch), **G1**	**7MC2998-2DC**

© Siemens 2020

3/2 Product overview
3/2 Overview

3/9 Introduction
3/9 Criteria for selection of flowmeter

3/11 SITRANS FM (electromagnetic)
3/11 System information
3/29 SITRANS FM Verificator
3/31 Transmitters
3/31 - MAG 5000/6000
3/43 - MAG 6000 I/6000 I Ex
3/48 Flow sensors
3/48 - MAG 1100 and MAG 1100 HT
3/56 - MAG 1100 F
3/66 - MAG 3100 and MAG 3100 HT
3/82 - MAG 3100 P
3/91 - MAG 5100 W
3/104 - SITRANS FM100
3/109 - Transmitter TRANSMAG 2 with sensor MAG 911/E
3/119 Battery-operated water meter MAG 8000
3/128 - MAG 8000 for abstraction and distribution network application (7ME6810)
3/133 - MAG 8000 CT for revenue and bulk metering (7ME6820)
3/140 - MAG 8000 3G/UMTS Wireless Communication Module
3/141 - Accessories and spare parts for MAG 8000

3/144 SITRANS FC (Coriolis)
3/144 System information
3/155 Transmitters
3/155 - SITRANS FCT030
3/161 - SITRANS FCT010
3/164 - SITRANS FCT070
3/167 Sensors and Flowmeter systems
3/167 - SITRANS FCS300 flow sensor
3/176 - SITRANS FC330 flowmeter system
3/180 - SITRANS FC310 flowmeter system
3/183 - SITRANS FCS300 with FCT070 transmitter
3/187 - SITRANS FCS400 flow sensor
3/193 - SITRANS FC430 flowmeter for OEM customers
3/197 - SITRANS FC410 flowmeter for OEM customers
3/200 - SITRANS FCS400 with FCT070 transmitter
3/203 - SITRANS FC MASS 2100 and FC300 DN 4 sensors
3/218 - MASS 2100 / FC300 DN 4 with FCT030 transmitter
3/223 - MASS 2100 / FC300 DN 4 with FCT010 transmitter
3/227 - MASS 2100 / FC300 DN 4 with FCT070 transmitter
3/231 Spare parts
3/231 - Digital - Spare parts
3/236 - MASS 6000 Generation - Spare parts
3/240 - SIFLOW FC070

3/244 SITRANS FS (ultrasonic)
3/244 Inline ultrasonic flowmeters
3/245 - System information
3/252 - SITRANS FUS060 transmitter
3/259 - SITRANS FUS080/FUE080 transmitter
3/268 - SONO 3300/FUS060 flowmeter
3/273 - SONO 3100/FUS060 flowmeter
3/282 - SONOKIT flowmeter (with FUS060 or FUS080)
3/292 - SITRANS FUS380 standard flowmeter
3/301 - SITRANS FUE380 flowmeter with CT approval
3/308 - SITRANS FUS380/FUE380 dimensional drawings and circuit diagrams
3/311 - SITRANS FUE950 energy calculator
3/320 - Pt500 temperature sensor pairs
3/322 Clamp-on ultrasonic flowmeters
3/322 - SITRANS FS230 ultrasonic flowmeter
3/324 - SITRANS FSS200 ultrasonic flow sensor
3/329 - SITRANS FST030 transmitter, wall mount housing
3/333 - Selection and ordering data for SITRANS FS230
3/344 - SITRANS FS220 ultrasonic flowmeter
3/353 - SITRANS FST020 transmitter, wall mount housing
3/357 - Thickness gauge
3/358 - Accessories and spare parts

3/361 SITRANS FX (Vortex)
3/361 SITRANS FX300
3/379 SITRANS FX330

3/395 SITRANS FVA
3/395 SITRANS FVA250

3/405 SITRANS FP (differential pressure flow measurement)
3/405 Introduction
3/410 SITRANS FP230/FPS200 primary elements according to ISO 5167
3/413 - Orifice plate with pressure tappings
3/421 - Orifice plate with annular chamber
3/428 - Orifice meter run
3/434 - Orifice plate
3/437 - Orifice plate with orifice flange according to ASME B16.36
3/441 SITRANS FP330/FPS300 averaging pitot tube
3/443 - Averaging pitot tube for gas and liquids
3/450 - Averaging pitot tube for steam
3/455 - Averaging pitot tube with FASTLOK

You can download all instructions, catalogs and certificates for SITRANS F free of charge at: www.siemens.com/flow-measurement

© Siemens 2020

Overview

	Application	Description	Catalog page	Software for parameterization
SITRANS FM electromagnetic flowmeters – Pulsed DC magnetic flowmeter				
	Designed in robust IP67 polyamide enclosures for compact or remote mounting. 19", back of panel and front of panel enclosure program.	**Transmitter MAG 5000/6000** • Superior signal resolution for optimum turn down ratio • Comprehensively self-diagnostic, for error indication and logging • Multi-lingual display and keypad interface • Communication modules: HART, Modbus, PROFIBUS, FOUNDATION Fieldbus, DeviceNet • Custody transfer approval: MI-001, PTB K7.2	3/31	SIMATIC PDM
	Designed in robust die-cast aluminum enclosure for demanding applications and where explosion proof protection is necessary.	**Transmitter MAG 6000 I/6000 I Ex** • Remote and compact mounting with all sensors • Communication modules: HART, Modbus, PROFIBUS, FOUNDATION Fieldbus, DeviceNet • Ex Approval: ATEX, IECEx, FM, UL, CSA • Multi-lingual display and touchpad keypad • Comprehensively self-diagnostic	3/43	SIMATIC PDM
	Designed for the general industry environment. The obstructionless performance of the MAG 1100 is unaffected by the suspended solids, viscosity and temperature challenges.	**Flow sensors MAG 1100 and MAG 1100 HT** • Metering tube DN 2 ... 100 (1/12 ... 4") flangeless design. • Corrosion-resistant AISI 316 stainless steel housing. • Highly resistant liner (ceramic or PFA) and electrodes fitting most extreme process media. • Temperature rating up to 200 °C (390 °F) • Ex Approval: ATEX, FM	3/48	
	Specially designed for the food & beverage and pharmaceutical industry. CERTIFIED EHEDG TYPE EL SEPTEMBER 2001	**Flow sensor MAG 1100 F** • AISI 316 stainless steel enclosure • Hygienic seal, 3A and EHEDG • Easy to clean • Supplied with connections according to your specification • Ex Approval: ATEX, FM	3/56	
	The MAG 3100 series with its flexibility in the choice of liner, electrode and flange material allows the measurement of even the most extreme process media.	**Flow sensors MAG 3100 and MAG 3100 HT** • For a wide range of pipe dimensions: DN 15 ... 2000 (½ ... 78") • Wide range of liner and electrode materials • High-temperature version for application with temperatures up to 180 °C (355 °F) • High-pressure solutions	3/78	

© Siemens 2020

Overview (continued)

	Application	Description	Catalog page	Software for parameterization
	The SITRANS FM MAG 3100 P sensor is designed to meet the most common specifications within the chemical and process industries.	**Flow sensor MAG 3100 P** • For pipe dimensions DN 15 ... 300 (½ ... 12") • Fully welded construction that is extremely rugged and can withstand special process conditions using extreme measurement electrodes • Approvals for hazardous areas: ATEX, FM, CSA, IEcEx • Comprehensive self-diagnostic for error indication and error logging • Temperature resistant up to 150 °C (302 °F)	3/82	
	Designed for all water and waste water applications in water plants and industrial applications.	**Flow sensor MAG 5100 W** • Metering tube DN 15 ... 1200 (DN 2000) (½"" ... 48" (78“)) • Hard Rubber or EPDM lining • Integral grounding electrodes as standard • Increased low flow accuracy for water leak detection • Drinking water approvals and custody transfer approvals , OIML R 49, MI-001 and PTB K7.2	3/91	
	The SITRANS FM100 is an electromagnetic flow meter for measuring and monitoring small and medium flows.	**Flow meter SITRANS FM100** NEW • Connection ½", ¾", 1", 2" • Flow- and temperature measurement • IO-Link communication • Dosing function with external control output • Flexible usage in different applications due to two individual configurable outputs • Bidirectional measuring • Robust stainless-steel design	3/104	
SITRANS FM electromagnetic flowmeters – High-power AC magnetic flowmeter				
	Designed for heavy-duty applications like pulp & paper stock over 3%; heavy mining slurries and mining slurries with magnetic particles.	**Transmitter Transmag 2** • Magnetic flowmeter with a very strong pulsed AC magnetic field • PROFIBUS PA or HART communication • Comprehensive self-test function	3/109	SIMATIC PDM
	Designed for heavy-duty applications like pulp & paper stock over 3%; heavy mining slurries and mining slurries with magnetic particles.	**Flow sensor MAG 911/E** • Metering tube: DN 15 ... DN 1000 (½" ... 40") • Metering tube liner: Hard Rubber, Linatex, Soft rubber, PTFE and Novolak • Integral smartPLUG for storing of calibration values • Multi-lingual display and touchpad keypad • Only remote version	3/109	
SITRANS FM electromagnetic flowmeters – Battery-operated magnetic water meter				
	Battery-operated electromagnetic water meter for water applications within abstraction, distribution network and revenue metering.	**Water meter MAG 8000** • Battery- and/or mains power operated water meter • Metering tube DN 25 ... 1200 (1 ... 48") • Remote and compact installation IP68/NEMA 6P enclosure • Custody transfer approval: PTB K7.2, OIML R 49 and MI-001 • Drinking water approvals • Communication modules: GSM/GPRS, Modbus, Encoder	3/119	SIMATIC PDM and Flow Tool

© Siemens 2020

3

Overview (continued)

	Application	Description	Catalog page	Software for parameterization
SITRANS FC mass flowmeters				
	Designed for a variety of liquid and gas applications in the process Industry. Measurement of mass flow, density, temperature and fraction.	**Flowmeters FC330 (Dual tube design)** • DN 15, DN 25, DN 50, DN 80, DN 100 and DN 150 • Flow from 70 ... 860 000 kg/h - water • Pipe material: AISI 316L or Nickel-Alloy C4 • Accuracy, typically: Flow: ≤ 0.1 % or 0.2 % version, Density: down to ≤ 0.002 g/cm³ • Liquid temperature/pressure: -50 ... +205 °C (-58 ... +400 °F)/ up to 100 bar (1450 psi) • Approvals: ATEX, IECEx, cCSAus, CRN, PED (depending on configuration)	3/176	
	Designed for a variety of liquid and gas applications Measurement of mass flow, density, temperature Modbus RS 485-RTU communication for direct integration into skids, OEM and pre-assembled plant packages	**Flowmeters FC310 (Dual tube design)** • DN 15, DN 25, DN 50, DN 80, DN 100 and DN 150 • Flow from 70 ... 860 000 kg/h • Pipe material: AISI 316L or Nickel-Alloy C4 • Accuracy, typically: Flow: ≤ 0.1 % or 0.2 % version, Density: down to ≤ 0.002 g/cm³ • Liquid temperature/pressure: -50 ... +205 °C (-58 ... +400 °F)/ up to 100 bar (1450 psi) • Approvals: ATEX, IECEx, cCSAus, Germanischer Lloyd/det Norske Veritas, Bureau Veritas, Lloyds of London, American Bureau of Shipping (depending on configuration)	3/180	
	Designed for a variety of liquid and gas applications Measurement of mass flow, density, temperature and fraction	**Flowmeters FC430 (Dual tube design)** • DN 15, DN 25, DN 50 • Flow from 20 ... 70 700 kg/h - water • Pipe material: AISI 316L • Accuracy, typically: Flow: ≤ 0.1 %, Density: down to 0.005 g/cm³ • Liquid temperature/pressure: -50 ... +200 °C (-58 ... + 392 °F)/ up to 100 bar (1450 psi) • Approvals: ATEX, IECEx, EAC Ex, cCSAus, NEPSI, CRN, PED, Germanischer Lloyd/det Norske Veritas, Bureau Veritas, Lloyds of London, American Bureau of Shipping	3/193	
	Designed for a variety of liquid and gas applications Measurement of mass flow, density, temperature Modbus RS-485 RTU communication for direct integration into skids, OEM and pre-assembled plant packages	**Flowmeters FC410 (Dual tube design)** • DN 15, DN 25, DN 50 • Flow from 20 ... 70 700 kg/h • Pipe material: AISI 316L • Accuracy, typically: Flow: ± 0.1 %, Density: down to ± 0.005 g/cm³ • Liquid temperature/pressure: -50 ... +200 °C (-58 ... +392 °F)/ up to 100 bar (1450 psi) • Approvals: ATEX, IECEx, EAC Ex, cCSAus, NEPSI, Germanischer Lloyd/det Norske Veritas, Bureau Veritas, Lloyds of London, American Bureau of Shipping	3/197	

© Siemens 2020

Overview (continued)

	Application	Description	Catalog page	Software for parameterization
	Designed for low flow applications	**Flowmeter MASS 2100 and FC300 with transmitter FCT010 or FCT030 (single tube design)** • MASS 2100: DI 1.5, DI 3, DI 6, DI 15 • FC300: DN 4 • Flow from 0.1 ... 5600 kg/h • Pipe material: Stainless steel AISI 316L/ 1.4435; Hastelloy C22/2.4602 • Accuracy, typically: - Flow: down to 0.1 % - Density: down to 0.0005 g/cm^3 • Liquid temp./pressure: -50 ... +180°C (-58 ... +356 °F) / Up to 410 bar (5946 psi) • Approvals: ed according to ATEX, IECEx, c-UL-us, CRN, PED	3/203	
	SITRANS FCT070 can be connected to all Coriolis type Sensors FCS300; FCS400; MASS 2100 and FC300 DN4 FCT070 can be used for machine builders and in the process industry plants. The meters are suitable for measuring on liquid and gas. With ET 200SP ST & HF the SITRANS FCT070 can be installed decentralized in small stations, with fast communication to the control room. The faceplates for TIA-Portal and PCS 7 offer the direct full remote access to the flow meter.	**Transmitter SITRANS FCT070** NEW • Easy integration into automation process control as TIA portal and PCS7 • Cost effective integration of Coriolis flow meters for PLC controlled machines • SITRANS FCT070 is a ET 200SP technology module and can combined with all other SIMATIC ET 200S SP ST & HF modules • Fast and trouble-free communication between the flow meter and the PLC through digital data communication with up to 10 ms update rate • ATEX Zone 2 FM Class 1 Div 2 approvals. • Included advanced batch functionality without additional modules.	3/164	
SITRANS FS Inline ultrasonic flowmeters				
	SITRANS FST030 Inline is designed for all ultrasonic flow metering. FST030 is released for water application on SONOKIT up to all pipe sizes in dual path	**SITRANS FST030 transmitter** • For SONOKIT up to DN 3000 and more • 1 or 2 path option • Analog output and relay • FDK085X6329 - HART • FDK085X6366 - Modbus	3/329	SIMATIC PDM
	SITRANS FUS060 is a time-based transmitter designed for ultrasonic flowmetering in pipes for the F US inline industry series up to DN 3000	**SITRANS FUS060 transmitter** • Die cast aluminum enclosure • Ex approved according to ATEX • HART communication + 1 analog output, 1 digital output for frequency or pulse and 1 relay output for alarms and flow direction • PROFIBUS PA communication with 1 digital output for frequency or pulse	3/252	SIMATIC PDM
	SITRANS FUS080 is a time-based transmitter designed for ultrasonic flowmetering in pipes for the SONOKIT, FUS380 and FUE380 series up to DN 1200	**SITRANS FUS080/FUE080 transmitter** • Battery or mains-powered • Easy one-button operation • Bidirectional measuring • IrDA optical eye communication • Robust poyamide enclosure	3/259	SIMATIC PDM

© Siemens 2020

3

Overview (continued)

	Application	Description	Catalog page	Software for parameterization
	The main application for SONO 3300 ultrasonic flowmeters is to measure the volume flow of: • Water and treated waste water • Hot water/cooling systems	**SONO 3300/FUS060** • ATEX-approved • DN 50 … DN 500 (2" … 12") steel pipes • PN 10 ... PN 40 or class 150 ... class 300 pressure rates • Flow 0.3 … 3 200 m^3/h (1.3 ... 14 089 GPM) • No pressure drop • FUS060 transmitter for separate mounting • Signal cables from sensor to transducer are highly protected from aggressive environment by stainless steel pipes	3/268	SIMATIC PDM
	The main application for SONO 3100 ultrasonic flowmeters is to measure the volume flow of: • Water and treated waste water • District heating systems	**SONO 3100/FUS060** • DN 100 ... DN 600 (4" ... 24") • Pipe in carbon steel • Transducers can be replaced under pressure • FUS060 transmitter for separate mounting • ATEX-approved • Measure of all liquids less than 350 Cst, conductive or non-conductive • No pressure drop • 1-track, 2-path; 4-path on request • Special material on request	3/273	SIMATIC PDM
	Installation of one, two or four transducer sets in existing concrete or steel pipes. Typically installed in pipes with large diameters or in hot/cold water applications	**SONOKIT** • FUS060 or FUS080 transmitter for separate mounting • DN 100 ... 3000 (4 ... 120") • Control and display unit • Temperature of medium: -20 ... +200 °C (-4 ... +395 °F) • Installation on empty pipes or pipes under pressure (hot-tap installation) • Standard 1-path or 2-path (4-path on request)	3/282	SIMATIC PDM
	Battery or mains-powered ultrasonic flowmeter for use within water-based district heating, cooling systems and utility. The FUS380 can also be used for water irrigation systems. SITRANS FUS380/FUE380 are designed to work with the SITRANS FUE950 energy calculator.	**FUS380/FUE380** • FUS380/FUE380: DN 50 ... 1200 (2 ... 48") • FUE380: Approved for custody transfer according to MID MI004 (according to EN 1434 Class 2, OIML R 75) • FUS380/FUE380: Red brass or painted carbon steel flanges and metering tube. AISI transducers • Water temperatures 2 … 200 °C (35.6 ... 392 °F) • Battery or mains-powered	3/292	SIMATIC PDM
	Universal thermal energy calculator for district heating and cooling applications.	**SITRANS FUE950** • Battery or mains-powered • 24 periods memory • 2 ports for plug-in modules as data output, extra input, M-Bus, RS 232/RS 485, current output • Complete set with temperature sensors and pockets • MID heating approval, PTB K7.2 cooling approval, MI004 type approval	3/311	

© Siemens 2020

Overview (continued)

	Application	Description	Catalog page	Software for parameterization
SITRANS FS clamp-on ultrasonic flowmeters				
	SITRANS FS clamp-on ultrasonic flowmeters provide highly accurate measurement while minimizing installation time and maintenance expense. These dedicated flowmeters are suitable for a wide variety of liquid applications, including those in the: • Water Industry • Wastewater Industry • HVAC Industry • Power Industry • Processing Industry • Hydrocarbon Industry	**SITRANS FS230** • Suitable for virtually any liquid, even those with high aeration or suspended solids • Hydrocarbon functions are ideal for applications carrying crude oil, refined petroleum or liquefied gas • Choice of single and dual path versions to suit your operating conditions and requirements. • Easy installation; no need to cut pipe or stop flow • Minimal maintenance; external sensors do not require periodic cleaning • Easy to read display with intuitive menu system • Hazardous area approvals for ATEX Zone 2, IECEx Zone 2 FMc Class I Div. 2	3/322	
	SITRANS FS220 basic is a fast-to-install clamp-on ultrasonic flowmeter for accurate measurements with minimal maintenance. Based on latest technology, this flow meter is ideal suitable for applications like: • Water Industry • Wastewater Industry • HVAC Industry • Power Industry • Process controls	**SITRANS FS220** • Easy installation during process condition, no need to cut pipe or stop flow • Minimal maintenance; external sensors do not require periodic cleaning • No media-contacting parts, no wear, no pressure drop, no energy loss • Wide turn-down ratio, very sensitive in low flow condition • Optional WideBeam technology ensures high performance • Compatible with all previously fielded transit time sensors	3/344	
	The thickness gauge can be used in any field application where there is a need for flow measurement. Including but not limited to: • Water and waste water • Energy measurement • Oil and gas industries	**Thickness gauge** The hand-held micro-processor controlled gauge is designed to measure the thickness of various metallic or non-metallic pipes. • Materials include steel, aluminum, titanium, plastics and ceramics • Measurements shown in millimeter or inches • Simple-to-read 4-digit LCD display • Weights 150 g (5.3 oz) • Battery operation for 250 h	3/357	
SITRANS FX Vortex flowmeter				
	Measurement of steam, gases and liquids in: • Chemical • HVAC / Power plants • Oil & Gas • Food & Beverage • Pharma	**SITRANS FX300** • Flange DN 15 … DN 300 (½" … 12") • Sandwich DN 15 … DN 100 (½" … 4") • 2-wire device 4 ... 20 mA, with integrated temperature and pressure sensors for compensation • HART communication • Medium temp.: -40 ... +240 °C (-40 ... +464 °F) • Medium pressure: up to 100 bar (1450 psi) • Hazardous area approvals: FM, CSA, ATEX • Compact or remote mounted transmitter	3/361	

© Siemens 2020

3

Overview (continued)

	Application	Description	Catalog page	Software for parameterization
	Very versatile and flexible for use in many process applications. Flow sensors combines flow, pressure and temperature measurement into one user-friendly, two-wire device. • Measurement of saturated steam and superheated steam • Heat metering of steam and hot water • Measurement of consumption in compressed air systems • Evaluation of Free Air Delivery (FAD) • SIP and CIP processes in the food, beverage and pharmaceutical industries • Measurement of conductive and non-conductive liquids • Safety-related measurement in SIL applications (SIL2).	**SITRANS FX330** • Integrated pressure and temperature compensation • Temperature compensation for saturated steam included as standard • SIL2 certified according to IEC 61508 Edition 2 • Use in hazardous areas • Integrated reduction of nominal diameter for space-saving and economic installation • Exchange of electronics without loss of calibration and configuration data • Gross and net heat calculation to support energy management • Remote version with cable length up to 50 m (164 ft)	3/379	
SITRANS FVA variable area meters				
	Measurement of flow of liquids and gases, also highly suitable for corrosive media, high temperatures and high pressures.	**FVA250** • All-metal variable area meter with various float materials • Connections: DN 15 ... DN 100 (½" ... 4") • Temperature of medium: -20 °C ... +300 °C (-4 ... +572 °F) • Optionally available with analog output or contacts	3/395	
SITRANS FP differential pressure flow measurement *NEW*				
	SITRANS FP product line is suitable for all kinds of applications – liquids, dry or wet gases and steam. Due to the robust though variable design it has been and still is one of the main technologies for flow measurement in various industries. A new digital sizing process ensures minimum effort during presales and full traceability in aftersales. The differential pressure portfolio consists of • pitot tube measuring system SITRANS FPS300 • differential pressure sensors acc. to ISO 5167 (orifices) SITRANS FPS200	• Suitable for a vast range of different applications • Available as pre-mounted compact system as well as remote parts • Advanced intelligent sizing procedure • Web-based sizing and data storage enables full traceability and easy communication • All benefits of SITRANS P320 available	3/405	

© Siemens 2020

Overview

Criteria for selection of flowmeter

Each method for measuring flow has specific properties, and each flow measuring point is characterized by specific requirements. The table shown below compares the properties of the various measuring instruments and thus provides assistance in selection of the optimum device.

This section of the field device catalog includes the following instruments for measuring flow:

- Electromagnetic
- Coriolis mass flow
- Ultrasonic
- Vortex volumetric- and mass flow
- Variable area meter
- Orifice plate

Measurement principle		**Electromagnetic**	**Coriolis**	**Ultrasonic (inline)**	**Ultrasonic (clamp-on)**	**Vortex**	**Variable area meter**	**Orifice plate**
Medium		Liquid (conductive)	Liquid or gas	Liquid	Liquid or gas	Steam/vapor, gases, liquid	Liquid or gas	Liquid, vapor, gas
Nominal size		DN 2 … 2000 (0.08" … 78")	1.5 … 150 mm (0.06" … 6")	DN 50 ... 3000 (2" ... 120")	6.4 mm ... 9.14 m (0.25" ... 360")	DN 15 … 300 (½" … 12")	DN 10 … 100 (0.4" … 4") G½" … G3"	DN 10 … 1000 (0.4" … 40")
Temperature range	°C (°F)	-40 … +200 (-40 … +392)	-50 … +180 (-58 … +356)	-20 ... +200 (-4 ... +392)	-40 ... +120 (-40 ... +248)	-40 ... +240 (-40 ... +464)	-20 … +300 (-4 … +572)	-200 … +500 (-328 … +932)
Max. pressure	bar (psi)	160 (2 320), optional higher	Up to 410 (Up to 5 950)	40 (580)	Unlimited	100 (1 450)	100 (1 450)	315 (4 569)
Accuracy	%	± 0,25 or ± 0,4	± 0,1 or ± 0,15	± 0,5 … ± 2	0,5 ... 1,0 % of flow, for velocities greater than 0,3 m/s (1 ft/s)	± 0,75 … ± 1	± 1.6 ... ± 2.0	± 0,5 … ± 2
Repeatability	%	0,1/0,2	0,05	0,25	0,15% of flow, for velocities greater than 0,3 m/s (1 ft/s)	0,1	0,5	0,5
Dynamic response range		1:100	1:100	1:100	1:100	1:25	1:10	1:6
Start-of-scale value	m/s (ft/s)	0 (0)	0 (0)	0,1 (0.33)	0 (0)	0,4 (1.31) 2,0 (6.56)	0,2 (0.66)	Re > 500
Full-scale value					± 36/120			Re < 10^8
• For liquids	m/s (ft/s)	0,25 … 10 (0.825 … 32.8)	10 (32.8)	10 (32.8)	± 12/40	10 (32.8)	3,5 (11.4)	3 (9.8)
• For steam/vapor, gases	m/s (ft/s)		Approx. 300 (1000)		± 12/40	80 (262.5)	60 (197)	50/25 (164/82)
Measured values								
Volume flow		•	•	•	•	•	•	•
Sound velocity				•	•			
Sound amplitude				•	•			
Density			•		•			
Mass flow			•	•	•	•		
Bidirectional measurement		•	•	•	•			•
Use								
• For custody transfer		•	•	•	•			
• As batching system		•	•		•			
• In viscosity range	mPa·s (cp)	0,1 … 100 000 (0.1 … 100 000)	0 ... 100 000 (0 ... 100 000)	0 ... 350 (0 ... 350)	0,5 ... 2800 (0.5 ... 2800)	0 … 10 (0 … 10)	0,5 … 100 (0.5 … 100)	0 … 10 (0 … 10)
Power supply		Mains or battery	Mains	Mains or battery	90... 240 V AC, 50...60 Hz, 15 VA or 9 ... 36 V DC, 10 W	2-wire	non	2-wire

© Siemens 2020

Overview (continued)

Communication solutions

Product	HART	PROFIBUS PA	PROFIBUS DP	FOUNDATION Fieldbus H1	DeviceNet	Modbus RTU	GSM/GPRS
SITRANS FM MAG 5000	• 1) 2) 4)						
SITRANS FM MAG 6000	• 1) 2) 4) 5)	• 1) 5) 6) 7)	• 1) 5) 6) 7)	• 2) 4) 5)	• 5)	• 1) 5) 10)	
SITRANS FM MAG 5000/6000 CT[8)]							
SITRANS FM MAG 6000 I	• 1) 2) 4) 5)	• 1) 5) 6) 7)	• 1) 5) 6) 7)	• 2) 4) 5)	• 5)	• 1) 5) 10)	
SITRANS FM MAG 6000 I Ex	• 1) 2) 4) 5)	• 1) 5) 6) 7)		• 2) 4) 5)			
SITRANS FM TRANSMAG 2	• 1) 4)	• 1) 6)					
SITRANS FM MAG 8000						• 1) 3) 10) 11) 12)	• 14)
SITRANS F C FCT010						• 1) 10)	
SITRANS F C FCT030	• 1) 2) 4) 8)	• 1) 2) 4) 8)	• 1) 2) 4) 8)			• 1) 2) 4) 8)	
SITRANS F C MASS 6000	• 1) 2) 4) 5)	• 1) 5) 6) 7)	• 1) 5) 6) 7)	• 2) 4) 5)	• 5)	• 1) 10)	
SITRANS F C MASS 6000 Ex d	• 1) 2) 4) 5)	• 1) 5) 6) 7)		• 2) 4) 5)	• 5)		
SIFLOW FC070			• 13)			• 1) 10) 11)	
SITRANS FUS060	• 1)	• 1) 6)					
SITRANS FUS080		• 1) 8) 12)					
SITRANS FUS1010[9)]						• 9) 10) 11)	
SITRANS FX300	• 1)						
SITRANS FX330	• 1)						
SITRANS P DS III Differential pressure and flow	• 1) 2)	• 1) 2) 7)		• 2)			

1) Supports SIMATIC PDM
2) Supports AMS
3) Supports Siemens Flow Tool
4) Supports HH275/375
5) Pluggable add-on module
6) Profile 2
7) Profile 3
8) CT versions are not approved with communication modules.
9) All wall mount models
10) RS 485
11) RS 232
12) IrDA (Infrared)
13) Connected to ET200M PROFIBUS interface
14) Only with 7ME6810

© Siemens 2020

Overview

SITRANS FM electromagnetic flowmeters are designed for measuring the flow of electrically conductive mediums.

The full SITRANS FM program consists of three different types of flowmeters making Siemens unique in that it covers all possible applications where electromagnetic flowmeters are a suitable match:

Modular pulsed DC flowmeters cover all ordinary applications within all industries. The wide variety of combinations and versions from the modular system means that ideal adaptation is possible to each measuring task and application.

SITRANS FM products

Battery-operated water meters (fully electronic) are the perfect match for drinking water applications like network distribution, revenue metering and irrigation where mains power is not available. In addition, it complies with the MID (EU) and OIML R 49 water meter standards and has the MCERTS certificate.

SITRANS FM MAG 8000

High-powered flowmeters are used for difficult applications where other flowmeters cannot stand up to the task. This flowmeter can handle liquids and heavy slurries in industries such as mining, cement and pulp and paper.

TRANSMAG 2

SITRANS FM MAG 911/E

© Siemens 2020

Benefits

Greater flexibility

- Wide product program
- Compact or remote installation using the same transmitter and sensor
- USM II communication platform for easy integration with all systems

Easier commissioning of MAG 5000, 6000, 6000 I

All SITRANS FM pulsed DC electromagnetic flowmeters feature a unique SENSORPROM memory unit which stores sensor calibration data and transmitter settings for the lifetime of the product.

At commissioning the flowmeter commences measurement without any initial programming.

The factory settings matching the sensor size are stored in the SENSORPROM unit. Also customer specified settings are downloaded to the unit. Should the transmitter be replaced, the new transmitter will upload all previous settings and resume measurement without any need for reprogramming.

Further, the "fingerprint" used in connection with the SITRANS FM Verificator is stored during the initial sensor calibration.

Easier service

Transmitter replacement requires no programming. SENSORPROM automatically updates all settings after initialization.

Room for growth

USM II the Universal Signal Module with "plug & play" simplicity, makes it easy to access and integrate the flow measurement with almost any system and bus-protocol and it ensures the flowmeter will be easy to upgrade to future communication/bus platforms.

Application

Electromagnetic flowmeters are suitable for measuring the flow of almost all electrically conductive liquids, pastes and slurries.

A prerequisite is that the medium must have a minimum conductivity. The temperature, pressure, density and viscosity have no influence on the result.

The main applications of the electromagnetic flowmeters can be found in the following sectors:

- Water and waste water
- Chemical industries
- Pharmaceutical industries
- Food and beverage industry
- Mining, aggregates and cements industries
- Pulp and paper industry
- Steel industry
- Power; utility and chilled water industry

The wide variety of combinations and versions from the modular system means that ideal adaptation is possible to each measuring task.

© Siemens 2020

Application (continued)

Please see Product selector on the Internet, because some constrains might be related to some of the features:
http://www.pia-selector.automation.siemens.com

	FM100	**MAG 1100**	**MAG 1100 HT**	**MAG 1100 F**	**MAG 3100**	**MAG 3100 HT**	**MAG 3100 P**	**MAG 5100 W**	**MAG 5100 W**	**MAG 911/E**	**MAG 8000/ MAG 8000 CT**
	7ME6010	**7ME6110**	**7ME6120**	**7ME6140**	**7ME6310**	**7ME6320**	**7ME6340**	**7ME6520**	**7ME6580**	**7ME5610**	**7ME6810 7ME6820**
Industry											
Water/waste water		**XX**			**XX**		**X**	**XXX**	**XXX**	**X**	**XXX**[1]
Chemical	•	**XXX**	**XXX**	**XX**	**XXX**	**XXX**	**XXX**	**X**			**X**
Pharmaceutical	•	**XX**	**XX**	**XXX**	**XX**	**XX**	**XX**	**X**	**X**		**X**
Food and beverage		**XX**		**XXX**	**X**	**X**	**X**	**X**	**X**		**X**
Mining, aggregates and cement		**XX**			**XXX**			**X**	**X**	**XXX**	**X**
HPI		**XX**	**X**		**XX**	**X**	**XX**	**X**	**X**		**X**
Other	•	**XX**	**XX**	**XX**	**XX**	**XX**	**XX**	**XX**	**XX**	**XXX**	**X**
Design											
Compact	•	•		•	•	•	•	•	•		•
Remote	•	•	•	•	•	•	•	•	•	•	•
Constant field (DC)		•	•	•	•	•	•	•	•		•
Alternating field (AC)										•	
Battery-operated constant field (DC)											•
Size											
DN 2 ($^1/_{12}$")		•									
DN 3 ($^1/_8$")		•									
DN 6 (¼")		•									
DN 10 ($^3/_8$")		•		•							
DN 15 (½")	•	•	•	•	•	•	•	•		•	
DN 25 (1")	•	•	•	•	•	•	•	•	•	•	•
DN 32 (1¼")				• [2]							
DN 40 (1½")		•	•	•	•	•	•	•	•	•	•
DN 50 (2")	•	•	•	•	•	•	•	•	•	•	•
DN 65 (2½")		•	•	•	•	•	•	•	•	•	•
DN 80 (3")		•	•	•	•	•	•	•	•	•	•
DN 100 (4")		•	•	•	•	•	•	•	•	•	•
DN 125 (5")					•	•	•	•	•	•	•
DN 150 (6")					•	•	•	•	•	•	•
DN 200 (8")					•	•	•	•	•	•	•
DN 250 (10")					•	•	•	•	•	•	•
DN 300 (12")					•	•	•	•	•	•	•
DN 350 (14")					•			•	•	•	•
DN 400 (16")					•			•	•	•	•
DN 450 (18")					•			•	•	•	•
DN 500 (20")					•			•	•	•	•
DN 600 (24")					•			•	•	•	•
DN 700 (28")					•			•	•	•	•
DN 750 (30")					•			•	•	•	•
DN 800 (32")					•			•	•	•	•
DN 900 (36")					•			•	•	•	•
DN 1000 (40")					•			•	•	•	•
DN 1050 (42")					•			•	•		•
DN 1100 (44")					•			•	•		•
DN 1200 (48")					•			•	•		•

• = available, **X** = can be used, **XX** = often used, **XXX** = most often used

[1] Not suitable for wastewater applications

[2] Only in combination with DN 32 adapter A5E02054637, A5E02218297, FDK:083G2120 and FDK:083G2160

© Siemens 2020

Application (continued)

Please see Product selector on the Internet, because some constrains might be related to some of the features:
http://www.pia-selector.automation.siemens.com

	FM100	MAG 1100	MAG 1100 HT	MAG 1100 F	MAG 3100	MAG 3100 HT	MAG 3100 P	MAG 5100 W	MAG 5100 W	MAG 911/E	MAG 8000/ MAG 8000 CT
	7ME6010	7ME6110	7ME6120	7ME6140	7ME6310	7ME6320	7ME6340	7ME6520	7ME6580	7ME5610	7ME6810 7ME6820
Size (continued)											
DN 1400 (56")					•				•		
DN 1500 (60")					•				•		
DN 1600 (66")					•				•		
DN 1800 (72")					•				•		
DN 2000 (78")					•				•		
Process connection											
Wafer design		•	•								
Sanitary process connections				•							
Flanges					•	•	•	•	•	•	•
Pressure ratings[1]											
EN 1092-1 PN 6					•				•		
EN 1092-1 PN 10					•	•	•	•	•	•	•
EN 1092-1 PN 16		•		•	•	•	•	•	•	•	•
EN 1092-1 PN 25					•	•				•	
EN 1092-1 PN 40		•	•	•	•	•	•	•	•	•	•
EN 1092-1 PN 63					•						
EN 1092-1 PN 100					•						
ANSI B 16.5 class 150					•	•	•	•	•	•	•
ANSI B 16.5 class 300					•	•				•	
ANSI B 16.5 class 600					•						
ASME B 16.47 class 150					•						
AWWA class D					•			•	•	•	•
AS 2129 table E					•	•					
AS 4087, PN 16					•	•		•	•		•
AS 4087, PN 21					•	•					
AS 4087, PN 35					•	•					
JIS B 2220:2004 K10					•			•	•	•	
JIS B 2220:2004 K20					•						
Accuracy											
Flow error ± 0.2 % of rate		•	•	•	•	•	•	•	•		•
Flow error ± 0.4 % of rate		•	•	•	•	•	•	•	•		•
Flow error ± 0.5 % of rate										•	
Repeatability[2]											
0.1 %		•	•	•	•	•	•	•	•		
0.2 %	•									•	
Grounding electrodes											
Grounding electrodes, incl.					•		•	•	•	(•)	•

• = available

[1] Pressure may be limited by the liner material chosen.

[2] Of actual flow for v ≥ 0.5 m/s (15 ft/s) and conductivity > 10 µS/cm

© Siemens 2020

Application (continued)

Please see Product selector on the Internet, because some constrains might be related to some of the features:
http://www.pia-selector.automation.siemens.com

	FM100	**MAG 1100**	**MAG 1100 HT**	**MAG 1100 F**	**MAG 3100**	**MAG 3100 HT**	**MAG 3100 P**	**MAG 5100 W**	**MAG 5100 W**	**MAG 911/E**	**MAG 8000/ MAG 8000 CT**
	7ME6010	**7ME6110**	**7ME6120**	**7ME6140**	**7ME6310**	**7ME6320**	**7ME6340**	**7ME6520**	**7ME6580**	**7ME5610**	**7ME6810 7ME6820**
Materials/temperature:											
Liner material/max. temperatures											
NBR: 70 °C (158 °F)								•			
EPDM: 70 °C (158 °F)					•			•			•
Soft rubber: 70 °C (158 °F)					•					•	
PTFE: 100 °C (212 °F)					•						
PTFE: 150 °C (302°F)						•	•			•	
PTFE: 180 °C (356 °F)						•				•	
Ebonite: 95 °C (203 °F)					•				•[3]	•	
Linatex: 70 °C (158 °F)					•					•	
Ceramic: 150 °C (302 °F)		•		•							
Ceramic: 200 °C (392 °F)			•[2]								
PFA: 100 °C (212 °F)					•						
PFA: 150 °C (302 °F)		•		•		•	•				
Novolak: 130 °C (266 °F)										•	
Electrodes											
Stainless steel	•				•	•				•	
Hastelloy C		•		•	•	•	•	•	•	•	•
Platinum		•	•	•	•	•	(•)[1]			•	
Titanium					•	•				•	
Tantalum					•	•	(•)[1]			•	
Ceramic coated stainless steel					•						
Ceramic coated Hastelloy C					•						
Flange/housing material											
Carbon steel					•	•	•	•	•	•	•
Stainless steel/carbon steel	•				•	•				•	
Polished stainless steel		•	•	•	•	•					
Approvals											
Custody transfer											
Cold Water – MI-001 (EU)								•			•
Cold water approval - OIML R 49/OIML R 49 MAA											•[4]
NMI 10 (Australia)								•[4]			•[4]
Chilled water pattern approval - PTB K 7.2								•[4]			
OE 12/C 040 (Austria) Chilled water pattern approval								•			
KIWA water approval								•			•
Marine											
ABS								•			
Bureau Veritas								•			
DNV-GL								•			
Lloyd's Register								•			

• = available
[1] Only for PTFE
[2] Ex sensor: 180 °C (356 °F)
[3] 70 °C (158 °F)
[4] For verification submit Product Variation Request (PVR)

© Siemens 2020

Application (continued)

Please see Product selector on the Internet, because some constrains might be related to some of the features:
http://www.pia-selector.automation.siemens.com

	FM100	**MAG 1100**	**MAG 1100 HT**	**MAG 1100 F**	**MAG 3100**	**MAG 3100 HT**	**MAG 3100 P**	**MAG 5100 W**	**MAG 5100 W**	**MAG 911/E**	**MAG 8000/ MAG 8000 CT**
	7ME6010	**7ME6110**	**7ME6120**	**7ME6140**	**7ME6310**	**7ME6320**	**7ME6340**	**7ME6520**	**7ME6580**	**7ME5610**	**7ME6810 7ME6820**
Approvals (continued)											
Hazardous areas											
ATEX – 2 GD (Zone 1/21)		•	•	•	•	•	•				
IECEx Zone 1/21					•	•	•				
FM Class I/II/III, Div 1					•[7]	•[7]	•[7]				
FM Class I, Zone 1/21					•	•	•				
FM - Class I, Div 2		•	•	•	•	•	•	•	•		
FM - Class I, Zone 2		•	•	•	•	•	•	•	•		
CSA Class I, Zone 1/21					•	•	•				
CSA - Class I, Div 2					•	•	•	•	•		
NEPSI Zone 1					•		•				
EAC Ex		•	•	•	•	•	•				
Hygienic											
EHEDG				•							
3A				•							
EC 1935:2004 European food contact material				•							
Drinking water											
WRAS (WR_C)					•			•[2]	•		•
ANSI/NSF 61 (US) [7]					•[3]			•	•		•
ACS (FR)					•			•			•
Belgaqua (B)					•			•			•
DVGW-W270 (D)					•			•			•
KIWA (NL)					•			•			•
AS/NZS 4020 (AU)					•			•			•
Other											
CRN (Canada)		•[8]			•	•	•	•	•		•
FM Fire Service (class number 1044)								•[6]			•[6]
MCERTS (GB)					•[4]			•[2]			•
EAC (Russia, Belarus, and Kasakhstan)		•	•	•	•	•	•	•	•	•	•
CPA (China)		•	•	•	•	•	•	•	•	•	•
VdS								•[5]			
Verificator											
Verificator compatible		•[1]	•[1]	•[1]	•[1]	•[1]	•[1]	•[1]	•[1]		

• = available

[1] Only in combination with MAG 5000 and MAG 6000 transmitters

[2] EPDM liner

[3] Only EPDM with Hastelloy electrodes

[4] EPDM or PTFE liner with AISI 316 or Hastelloy electrodes

[5] Only valid for DN 50 to DN 300 (2" to 12")

[6] Sizes: DN 50, DN 80, DN 100, DN 150, DN 200, DN 250, and DN 300 (2", 3", 4", 6", 8", 10", and 12") with ANSI B16.5 Class 150 flanges

[7] Only DN 15 to DN 300 (½" to 12") with MAG 6000 I Ex, compact mounted

[8] Only PFA liner

© Siemens 2020

Application (continued)

Please see Product selector on the Internet, because some constrains might be related to some of the features: http://www.pia-selector.automation.siemens.com							
	MAG 5000	**MAG 6000**	**MAG 6000 I**	**MAG 6000 I Ex**	**MAG 6000 + Safety barrier**	**TRANSMAG 2**	**MAG 8000/ MAG 8000 CT**
	7ME6910	**7ME6920**	**7ME6930**	**7ME6930**	**7ME6920**	**7ME5034**	**7ME6810 7ME6820**
Industry							
Water/waste water	**XXX**	**XXX**	**XX**	**X**		**X**	**XXX**
Chemical	**X**	**XX**	**XX**	**XXX**	**X**		**X**
Pharmaceutical	**X**	**XXX**	**XX**	**XXX**	**X**		**X**
Food and beverage	**XX**	**XXX**	**XX**				**X**
Mining, aggregates and cement	**XX**	**X**	**XX**	**X**		**XXX**	**X**
HPI	**X**	**X**	**X**	**XX**			**X**
Other	**XX**	**XX**	**XX**	**XX**		**XX**	**X**
Design							
Compact	•	•	•	•			•
Remote	•	•	•	•	•	•	•
Constant field (DC)	•	•	•	•	•		•
Alternating field (AC)						•	
Battery-operated constant field (DC)							•
Enclosure transmitter							
Polyamide, IP67	•	•					
Die-cast aluminum			•	•		•	
Stainless steel		•					•[1]
19” rack	•	•			•		
Front panel mounting	•	•			•		
Panel mounting	•	•			•		
IP66 wall mounting	•	•	•	•	•		
Accuracy							
Flow error ± 0.2 % of rate		•	•	•	•		•
Flow error ± 0.4 % of rate	•						•
Flow error ± 0.5 % of rate						•	
Repeatability[3]							
0.1 %	•	•	•	•	•		
0.2 %						•	
Communication							
HART	•	•	•	•	•	•	
PROFIBUS PA		•	•	•	•	•	
PROFIBUS DP		•	•		•		
FOUNDATION Fieldbus H1		•	•	•	•		
DeviceNet		•	•		•		
Modbus RTU/RS 485		•	•		•		•[2]
Encoder interface module (Sensus protocol) for Itron 200WP radio							•
GSM/GPRS module							•
Batching							
Batching		•	•	•	•		

• = available, **X** = can be used, **XX** = often used, **XXX** = most often used

1) IP68 enclosure

2) Modbus RTU also as serial RS 232

3) Of actual flow for v ≥ 0.5 m/s (1.5 ft/s) and conductivity > 10 µS/cm

© Siemens 2020

Application (continued)

Please see Product selector on the Internet, because some constrains might be related to some of the features: http://www.pia-selector.automation.siemens.com							
	MAG 5000	**MAG 6000**	**MAG 6000 I**	**MAG 6000 I Ex**	**MAG 6000 + Safety barrier**	**TRANSMAG 2**	**MAG 8000/ MAG 8000 CT**
	7ME6910	**7ME6920**	**7ME6930**	**7ME6930**	**7ME6920**	**7ME5034**	**7ME6810 7ME6820**
Power supply							
24 V	• [1]	• [1]	•	•			• [1][2]
115 V - 230 V	•	•	•	•	•	•	• [2]
Battery							•
Approvals							
Custody transfer							
Cold water - MI-001 (EU)	•	•					•
Cold water approval - OIML R 49/OIML R 49 MAA							•
NMI 10 (Australia)		• [5]					• [5]
Chilled water pattern approval PTB K 7.2	• [5]	• [5]					• [5]
OE12/C 040 (Austria) Chilled water pattern approval	•	•					
KIWA water approval		•					•
Marine							
ABS	•	•					
Bureau Veritas	•	•					
DNV-GL	•	•					
Lloyd's Register	•	•					
Hazardous areas							
ATEX - 2G GD (Zone 1/21)				•	(•) [3]		
IECEx Gb Zone 1/21				•			
FM Class I/II/III, Div 1				• [4]			
FM Class I, Zone 1/21				•			
FM Class I, Div 2	•	•	•				
FM Class I, Zone 2	•	•	•				
CSA Class I, Zone 1/21				•			
CSA Class I, Div 2	•	•	•				
UL/C-UL-general safety	•	•			•		
NEPSI Zone 1				•			
EAC Ex				•	•		
Other							
FM Fire Service (1044)	•	•					•
KCs (South Korea)	•	•	•	•	•		
EAC (Russia, Belarus, Kazakhstan)	•	•	•	•	•	•	•
CPA (China)	•	•	•	•	•	•	•
VdS	•	•					
Other national approvals, see internet	•	•	•	•	•	•	•
Verificator							
Verificator compatible	•	•					

• = available

1) 12/24 V AC/DC

2) Main power with battery backup

3) Only sensor in hazardous area

4) Only with sensors sizes DN 15 to DN 300 (½" to 12") compact

5) For verification submit Product Variation Request (PVR)

For more national approvals please check our internet page
http://support.automation.siemens.com/WW/view/en/10806954/134200

© Siemens 2020

Application (continued)

Practical examples of ordering

SITRANS FM compact installation

Example

Sensor	**7ME6310-3TC11-1JA1**
Pipe size	DN 100
Liner	Soft rubber
Electrodes	SS 316
Flanges	EN 1092-1, PN 16
Transmitter	**MAG 6000, Polyamide, 115 … 230 V AC**
Accuracy	± 0.2 % ± 1 mm/s
Supply	230 V AC

Note:
MAG 5000/6000 transmitters, sensors and communication modules are packed in separate boxes, the final assembly takes place during installation at the customer's place.

SITRANS FM remote installation

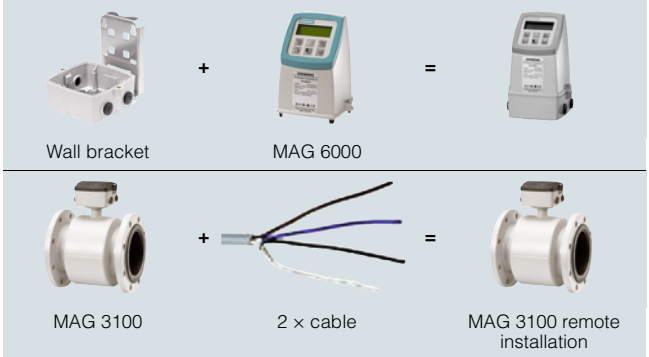

Example

Sensor	**7ME6310-3TC11-1AA1**
Pipe size	DN 100
Liner	Soft rubber
Electrodes	SS 316
Flanges	EN 1092-1, PN 16
Transmitter	**7ME6920-1AA10-0AA0**
Accuracy	± 0.2 % ± 1 mm/s
Supply	230 V AC
Wall mounting kit	**FDK:085U1018**
Cable kit with sensor cable and electrode cable	**A5E01181647**

© Siemens 2020

Technical specifications

Flowmeter Calibration and traceability

To ensure continuous accurate measurement, flowmeters must be calibrated. The calibration is conducted at Siemens facilities with traceable instruments referring directly to the physical unit of measurement according to the International System of Units (SI).

Therefore, the calibration certificate ensures recognition of the test results worldwide, including the US (NIST traceability).

Siemens offers accredited calibrations assured to ISO 17025 in the flow range from 0.0001 m^3/h to 10 000 m^3/h.

The calibration follows the ISO 4185 performing calibrations under two methods: Static Weighing and Reference meter. Providing a measurement uncertainty of ±0.1 %.

Siemens accredited laboratories are recognized by ILAC MRA (International Laboratory Accreditation Corporation - Mutual Recognition Arrangement) ensuring international traceability and recognition of the test results worldwide.

A calibration certificate is shipped with every sensor and calibration data are stored in the SENSORPROM memory unit.

Flowmeter uncertainty

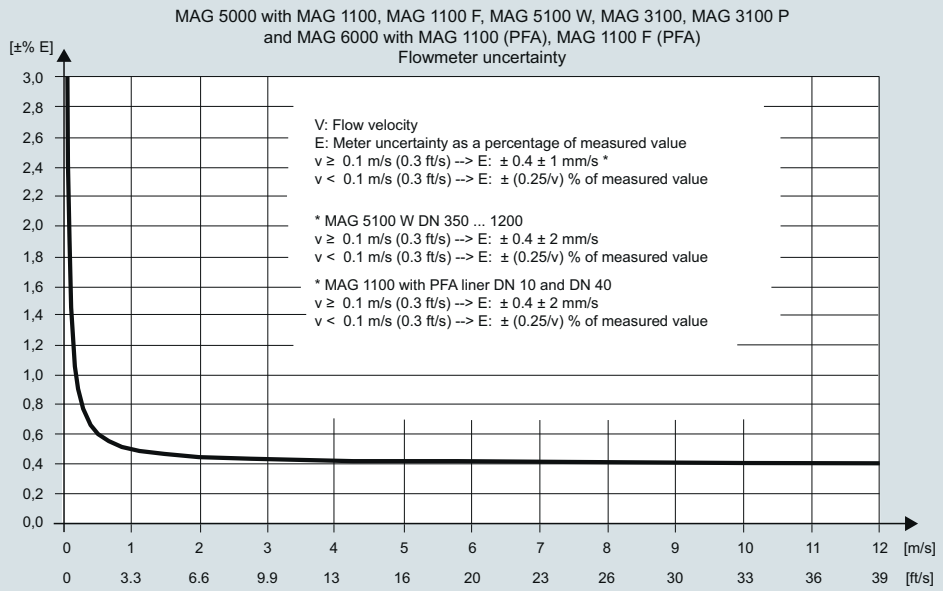

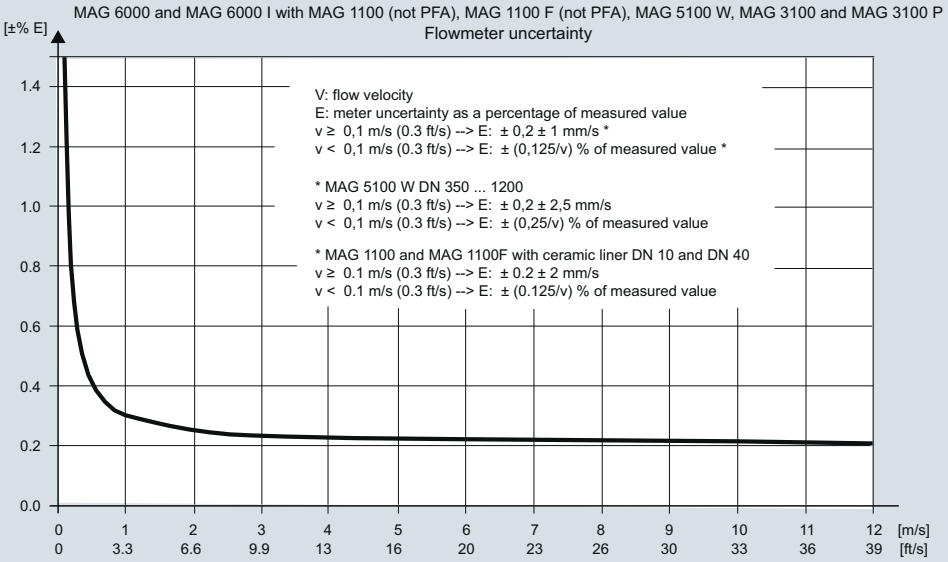

© Siemens 2020

Technical specifications (continued)

Calibration reference conditions

Reference conditions (ISO 9104 and DIN EN 29104)	
Temperature medium	20 °C ± 10 K (68 °F ± 18 °F)
Temperature ambient	25 °C ± 10 K (77 °F ± 18 °F)
Supply voltage	U_n ± 1 %
Warming-up time	30 minutes
Incorporation in conductive pipe section	
• Inlet section	10 x DN (DN ≤ 1200/48")
	5 x DN (DN > 1200/48")
• Outlet section	5 x DN (DN ≤ 1200/48")
	3 x DN (DN > 1200/48")
Flow conditions	Developed flow profile
Additions in the event of deviations from reference conditions	
Current output	As pulse output (± 0,1 % of actual flow +0,05 % FSO)
Effect of ambient temperature	
• Display frequency/pulse output	< ± 0,003 %/K act.
• Current output	< ± 0,005 %/K act.
Effect of supply voltage	< 0,005 % of measuring value on 1 % change
Repeatability	± 0,1 % of actual flow for v ≥ 0,5 m/s (1.5 ft/s) and conductivity > 10 µS/cm
Certificates	
• EN 10204-2.1	Certificate of conformity, stating that the delivered parts are made of the material quality that was ordered. Available as Z option C15.
• EN 10204-2.2	Test report certificate, a non batch specific material analysis of the ordered material. Available as Z option C14.
• EN 10204-3.1	Material analysis certificate, a batch specific analysis of the material issued by an independent inspector. Certification covers all pressure containing and wetted parts. Available as Z option C12.

Calibration test point

Test points for default calibration at 25% and 90% of factory Q_{max}.

Size	Q_{max}	90%	25%
mm	m^3/h	m^3/h	m^3/h
2	0.055	0.0495	0.01375
3	0.127	0.1143	0.03175
6	0.5	0.45	0.125
10	1.4	1.26	0.35
15	3	2.7	0.75
25	9	8.1	2.25
40	23	20.7	5.75
50	35	31.5	8.75
65	60	54	15
80	90	81	22.5
100	140	126	35
125	220	198	55
150	320	288	80
200	550	495	137.5
250	900	810	225
300	1300	1170	325
350	1700	1530	425
400	2250	2025	562.5
450	2800	2520	700
500	2800	2520	700
600	2800	2520	700
700	6000	5400	1500
750	6000	5400	1500
800	6000	5400	1500
900	6000	5400	1500
1000	6000	5400	1500
1050	6000	5400	1500
1100	6000	5400	1500
1200	6000	5400	1500
1400	7000	6300	1750
1500	7000	6300	1750
1600	7000	6300	1750
1800	7000	6300	1750
2000	7000	6300	1750

© Siemens 2020

Technical specifications (continued)

Technical specifications PROFIBUS PA/DP

General specifications	
PROFIBUS device profile	3.00 Class B
Certified	No
MS0 connections	1
MS1 connections	1
MS2 connections	2

Electrical specification DP

Physical layer specifications	
Applicable standard	IEC 61158/EN 50170
Physical Layer (Transmission technology)	RS 485
Transmission speed	≤ 1.5 Mbits/s
Number of stations	Up to 32 per line segment, (maximum total of 126)
Cable specification (Type A)	
Cable design	Two-wire twisted pair
Shielding	CU shielding braid or shielding braid and shielding foil
Impedance	35 up to 165 Ω at frequencies from 3 … 20 MHz
Cable capacity	< 30 pF per meter
Core diameter	> 0,34 mm^2, corresponds to AWG 22
Resistance	< 110 Ω per km
Signal attenuation	Max. 9 dB over total length of line section
Max. bus length	200 m at 1500 kbit/s, up to 1.2 km at 93.75 kbit/s. Extendable by repeaters

Electrical specification PA

Physical layer specifications	
Applicable standard	IEC 61158/EN 50170
Physical Layer (Transmission technology)	IEC-61158-2
Transmission speed	31.25 Kbits/second
Number of stations	Up to 32 per line segment, (maximum total of 126)
Max. basic current [I_B]	14 mA
Fault current [I_{FDE}]	0 mA
Bus voltage	9 … 32 V (non Ex)
Preferred cable specification (Type A)	
Cable design	Two wire twisted pair
Conductor area (nominal)	0,8 mm^2 (AWG 18)
Loop resistance	44 Ω/km
Impedance	100 Ω ± 20 %
Wave attenuation at 39 kHz	3 dB/km
Capacitive asymmetry	2 nF/km
Bus termination	Passive line termination at both
Max. bus length	Up to 1,9 km. Extendable by repeaters

IS (Intrinsic Safety) data	
Required sensor electronics	Compact or remote mounted SITRANS FM MAG 6000 I Ex
FISCO	YES
Max. U_I	17,5 V
Max. I_I	380 mA
Max. P_I	5,32 V
Max. L_I	0 µH
Max. C_I	0 nF
FISCO cable requirements	
Loop resistance R_C	15 … 150 Ω/km
Loop inductance L_C	0,4 … 1 mH/km
Capacitance C_C	80 … 200 nF/km
Max. Spur length in IIC and IIB	30 m
Max. Trunk length in IIC	1 km
Max. Trunk length in IIB	5 km

PROFIBUS parameter support

The following parameters are accessible using a MS0 relationship from a Class 1 Master.
MS0 specifies cyclic Data Exchange between a Master and a Slave.

Cyclic services		
Input (Master view)	**Parameter**	**MAG 6000/MAG 6000 I**
	Mass flow	
	Volume flow	✓
	Temperature	
	Density	
	Fraction A	
	Fraction B	
	Pct Fraction A	
	Totalizer 1	✓
	Totalizer 2[1)]	✓
	Batch progress[1)]	✓
	Batch setpoint	✓
	Batch compensation	✓
	Batch status (running …)	✓
Output (Master view)	Set Totalizer 1+2	✓
	Set Mode Totalizer 1+2	✓
	Batch control (start, stop …)	✓
	Batch setpoint	✓
	Batch compensation	✓

[1)] Value returned is dependent on the BATCH function.
When ON, Batch progress is returned.
When OFF, TOTALIZER 2 is returned.

© Siemens 2020

Technical specifications (continued)

Flow and speed chart

Metric

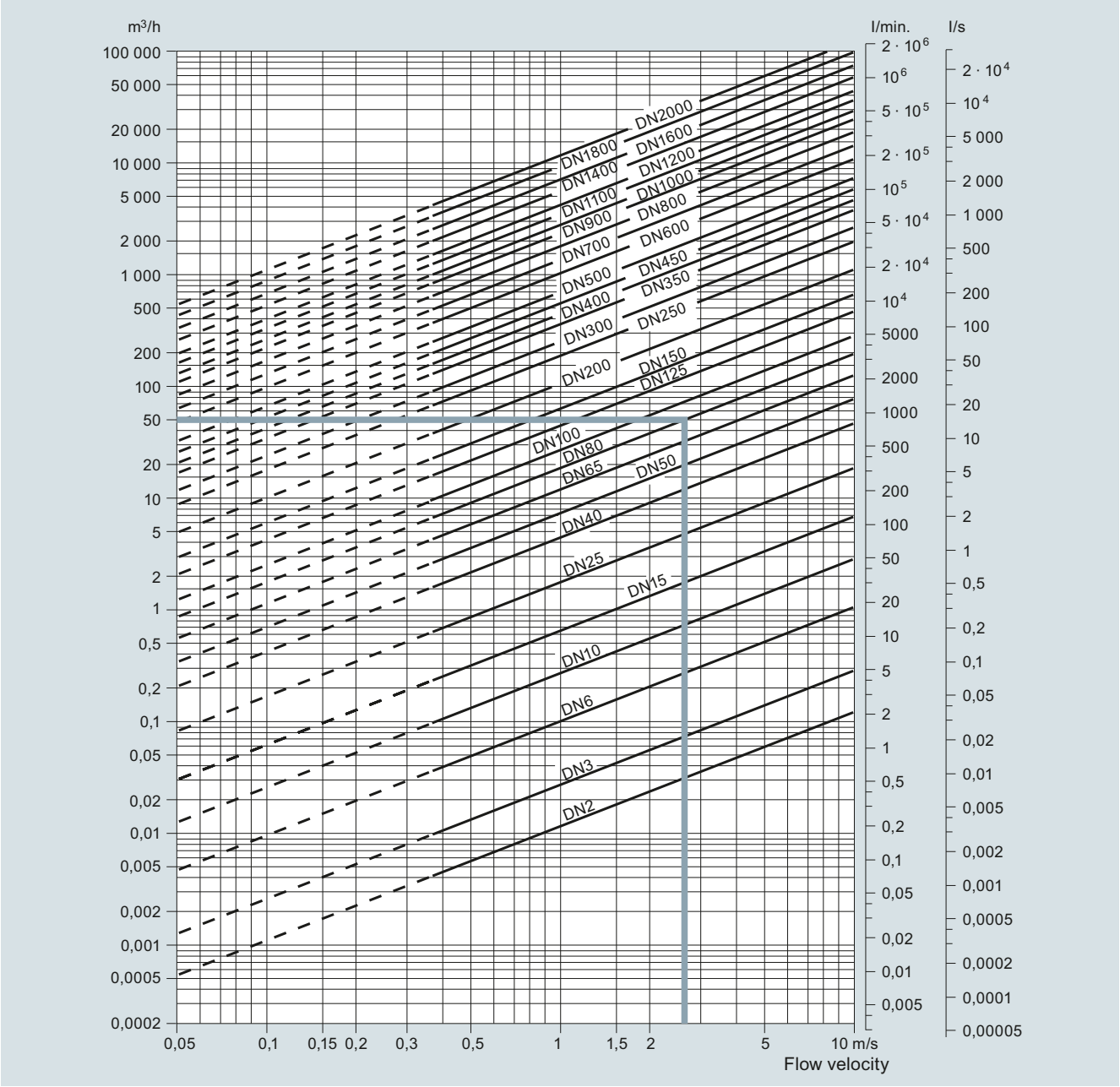

Sizing table (DN 2 … DN 2000)

The table shows the relationship between flow velocity v, flow quantity Q and sensor dimension DN.

Guidelines for selection of sensor

Min. measuring range: 0 … 0.25 m/s

Max. measuring range: 0 … 10 m/s

Normally the sensor size is selected so that nominal flow velocity v lies within the measuring range 1 to 3 m/s.

Example:

Flow quantity of 50 m^3/h and a sensor dimension of DN 80 gives a flow velocity of 2.7 m/s, which is within the recommended measuring range of 1 to 3 m/s.

Flow velocity calculation formula	Units
$v = 1273.24 \cdot Q/DN^2$ or	v: [m/s], Q: [l/s], DN: [mm]
$v = 353.68 \cdot Q/DN^2$	v: [m/s], Q: [m³/h], DN: [mm]

For more information visit:
https://new.siemens.com/global/en/products/automation/process-instrumentation/flow-measurement/electromagnetic.html

© Siemens 2020

3

Technical specifications (continued)

Imperial

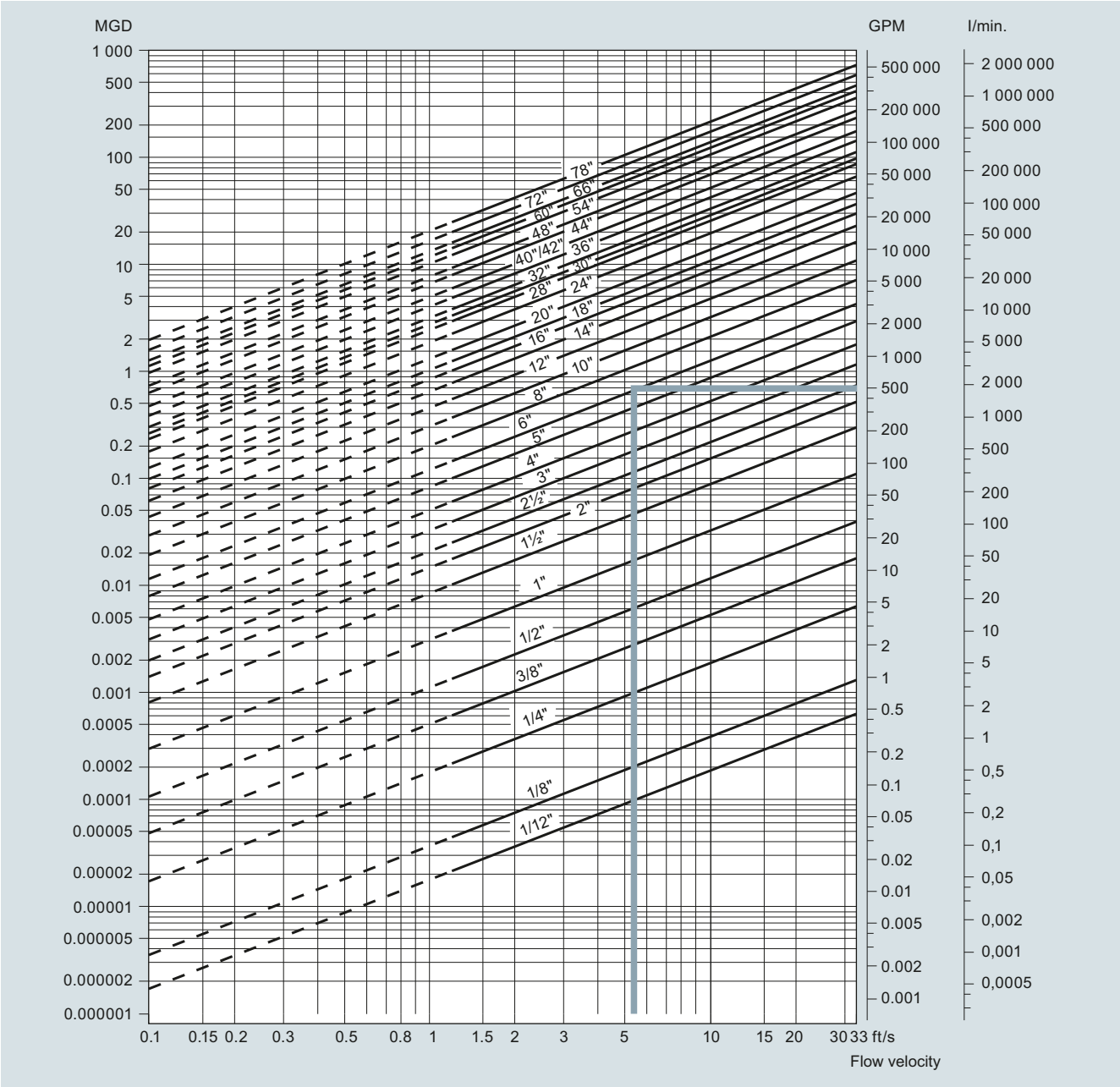

Sizing table (1/12" … 78")

The table shows the relationship between flow velocity v, flow quantity Q and sensor dimension size.

Guidelines for selection of sensor

Min. measuring range: 0 … 0.8 ft/s

Max. measuring range: 0 … 33 ft/s

Normally the sensor size is selected so that nominal flow velocity v lies within the measuring range 3 to 10 ft/s.

Example:

Flow quantity of 500 GPM and a sensor dimension of 6" gives a flow velocity of 5.6 ft/s, which is within the recommended measuring range of 3 to 10 ft/s.

Flow velocity calculation formula	Units
$v = 0.408 \cdot Q/(\text{Pipe I.D.})^2$ or	v: [ft/s], Q: [GPM], Pipe I.D.: [inch]
$v = 283.67 \cdot Q/(\text{Pipe I.D.})^2$	v: [ft/s], Q: [MGD], Pipe I.D.: [inch]

For more information visit:
https://new.siemens.com/global/en/products/automation/process-instrumentation/flow-measurement/electromagnetic.html

© Siemens 2020

Technical specifications (continued)

Installation conditions

Vibrations

Strong vibrations should be avoided.

In applications with strong vibrations, remote mounting of the transmitter is recommended.

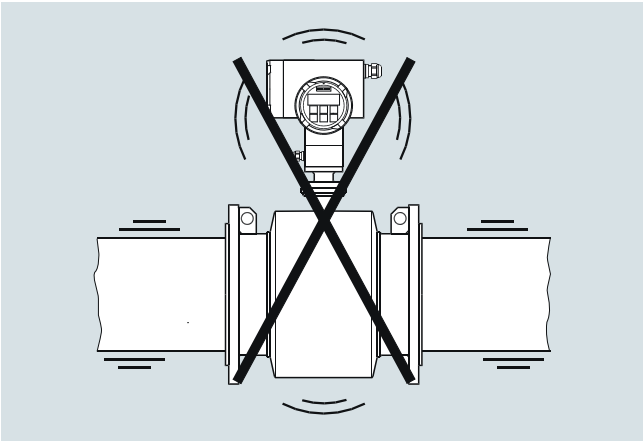

The sensor must always be completely filled with liquid.

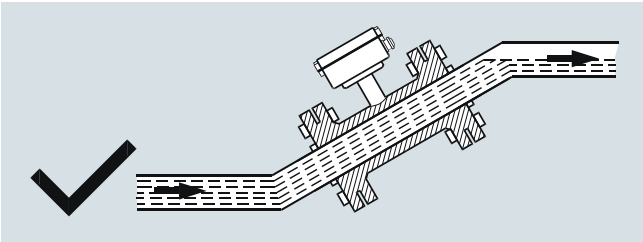

Install in pipelines which are always full

The sensor must always be completely filled with liquid. Therefore avoid:

- Installation at the highest point in the pipe system
- Installation in vertical pipes with free outlet

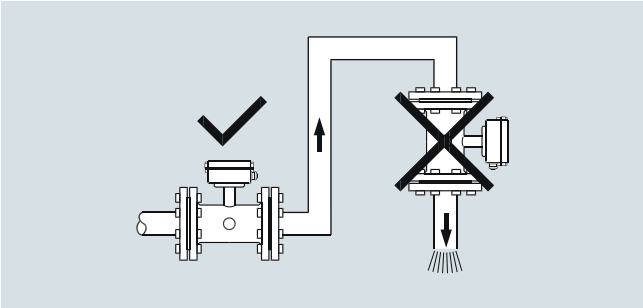

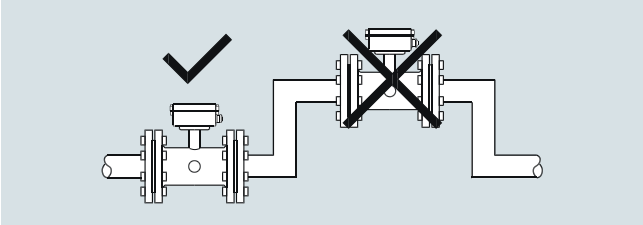

Do not install in pipelines which can run empty

For partially filled pipes or pipes with downward flow and free outlet the flowmeter should be located in a U-Tube.

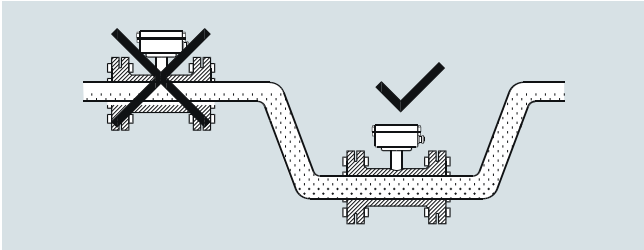

Install in U-tubes when pipe is partially filled

Installation in vertical pipes

Recommended flow direction: upwards. This minimizes the effect on the measurement of any gas/air bubbles in the liquid.

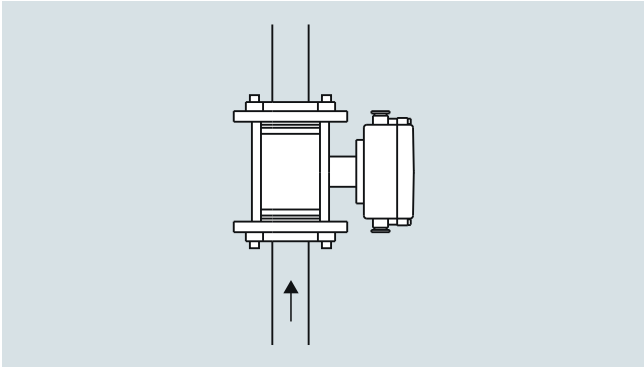

Install in vertical pipes with upward flow direction

Installation in horizontal pipes

The sensor must be mounted as shown in the below figure. Do not mount the sensor as shown in the lower figure. This will position the electrodes at the top where there is possibility for air bubbles and at the bottom where there is possibility for mud, sludge, sand etc.

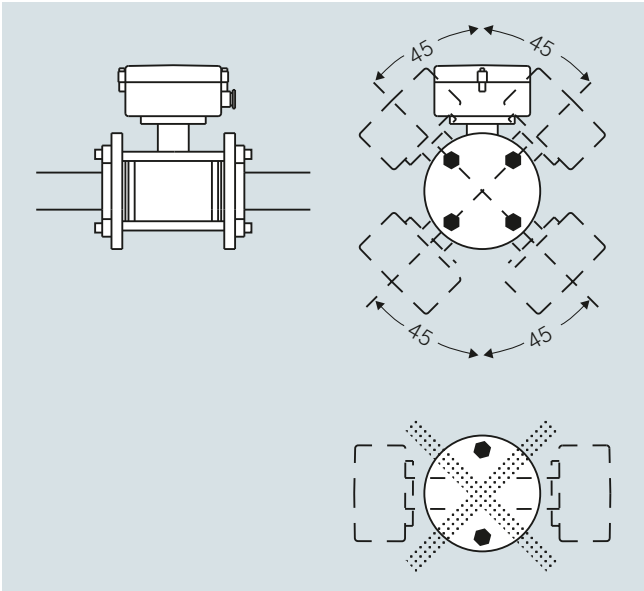

© Siemens 2020

3

Technical specifications (continued)

Measuring abrasive liquids and liquids containing particles

Recommended installation is in a vertical/inclined pipe to minimize the wear and deposits in the sensor.

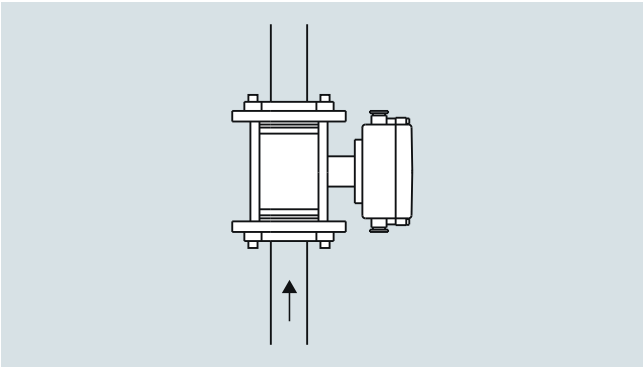

Install in vertical pipelines with upward flow direction if measuring abrasive liquids

Inlet and outlet conditions

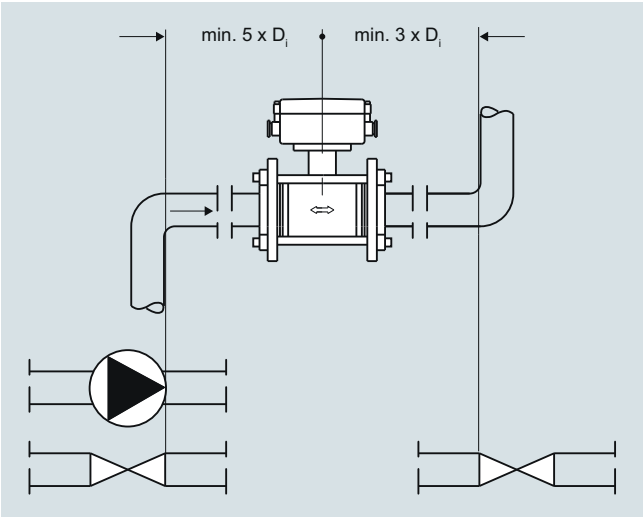

Recommended straight pipe lengths up and downstream for installations between elbows, pumps and valves

To achieve maximum accurate flow measurement it is essential to have straight pipe lengths up and downstream. Practical experience has proved that the MAG 5100 W and MAG 8000 are capable to operate in non-optimal piping arrangements and still provide acceptable accuracy even with zero diameters upstream and downstream of straight run pipe.

It is also important to center the flowmeter in relation to pipe flange and gaskets.

Ambient temperature-Installation

Temperature changes can cause expansion or contraction in the pipe system. To avoid damage on the sensor use of proper gasket and torque should be ensured. For more information see sensor instruction.

Potential equalization

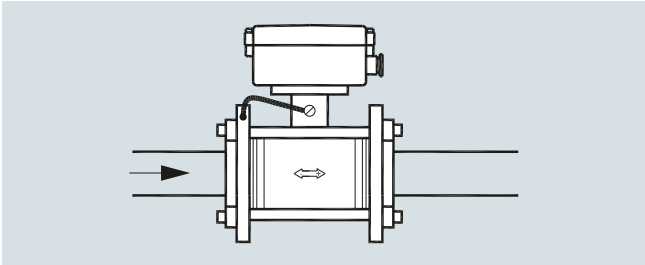

Potential equalization

The electrical potential of the liquid must always be equal to the electrical potential of the sensor. This can be achieved in different ways depending on the application:

- Wire jumper between sensor and adjacent flange (MAG 1100, MAG 3100)
- Direct metallic contact between sensor and fittings (MAG 1100 F)
- Built-in grounding electrodes (MAG 3100, MAG 5100 W)
- Optional grounding/protection flanges/rings (MAG 1100, MAG 3100, MAG 8000)
- Optional graphite gaskets on MAG 1100 (standard for MAG 1100 High Temperature)
- MAG 8000 installed in plastic or coated pipes: two grounding rings to be used.

Grounding

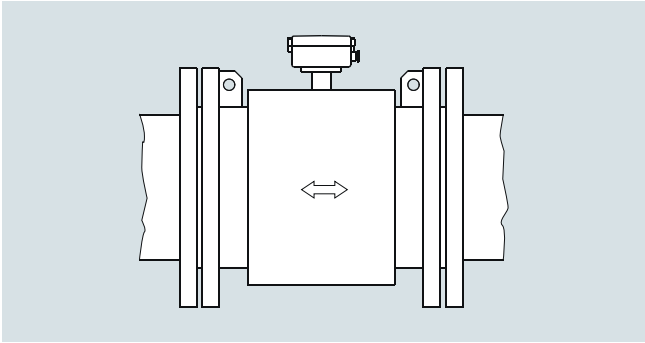

MAG 3100 and MAG 5100 W: with grounding electrodes in conductive and non-conductive pipes (no further action necessary)

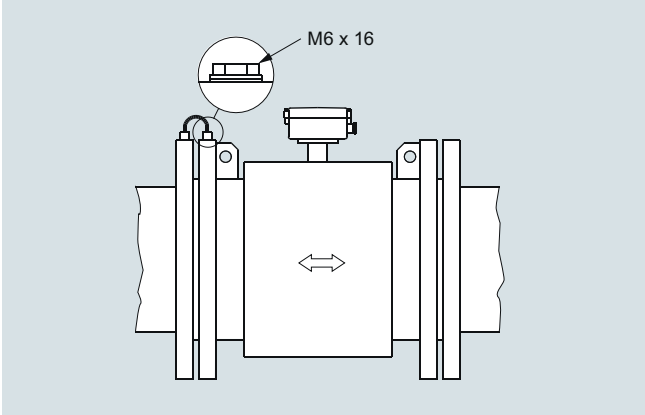

MAG 1100 and MAG 3100; without grounding electrodes in conductive pipes (MAG 1100 use graphite gasket)

© Siemens 2020

Technical specifications (continued)

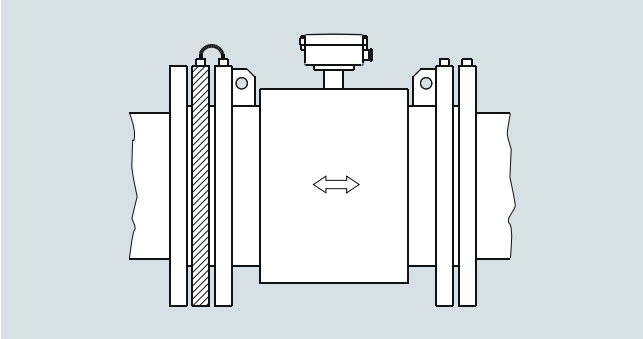

Without grounding electrodes in non-conductive pipes use grounding ring(MAG 1100 use graphite gasket)

MAG 1100 F grounding via process connections. MAG 8000 grounding see the section about MAG 8000.

Vacuum

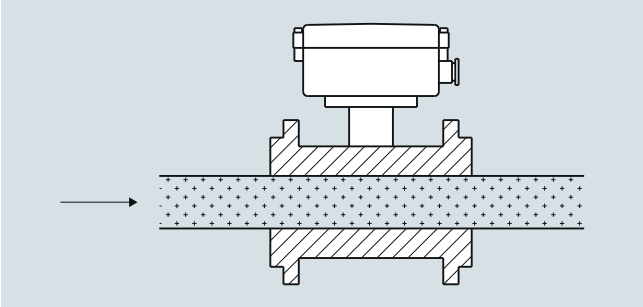

In order to prevent damages of liner when operating meters under vacuum please take note of the information "Operating pressure" given in section "Technical specification".

Installation in large pipes

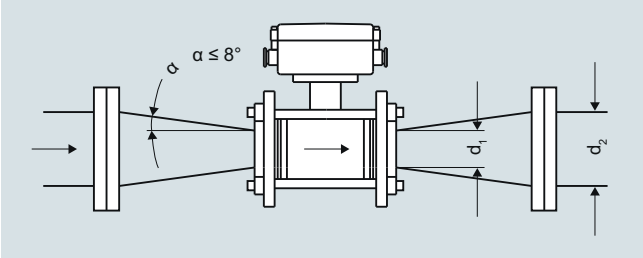

Reduction in nominal pipe diameter

The flowmeter can be installed between two reducers (e.g. DIN 28545). Assuming that at 8° the following pressure drop curve applies. The curves are applicable to water.

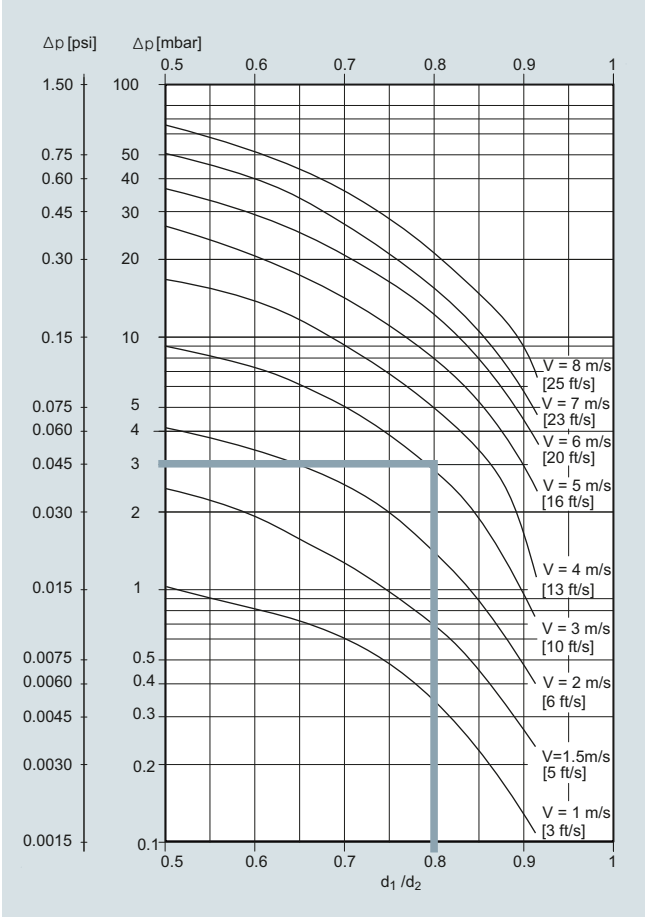

Pressure drop as function of diameter reduction between reducers

Example:

Flow velocity (v) of 3 m/s (10 ft/s) in a sensor with a diameter reduction DN 100 (4") to DN 80 (3") (d_1/d_2 = 0.8) gives a pressure drop of 2.9 mbar (0.04 psi).

Ambient temperature

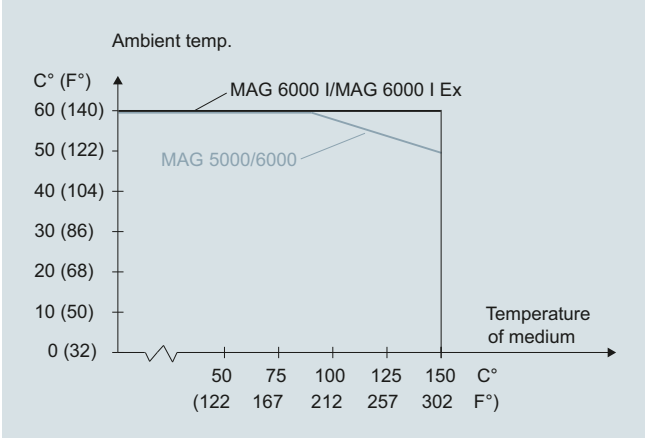

Max. ambient temperature as a function of temperature of medium

The transmitter can be installed either compact or remote.

With compact installation the temperature of medium must be according to the graph.

© Siemens 2020

Technical specifications (continued)

Sensor cables and conductivity of medium

Compact installation:

Liquids with an electrical conductivity ≥ 5 µS/cm.

Note for MAG 1100 sizes DN 2 and DN 3:

- The media conductivity must be ≥ 30 uS/cm

Note for MAG 8000:

- The media conductivity must be ≥ 20 uS/cm

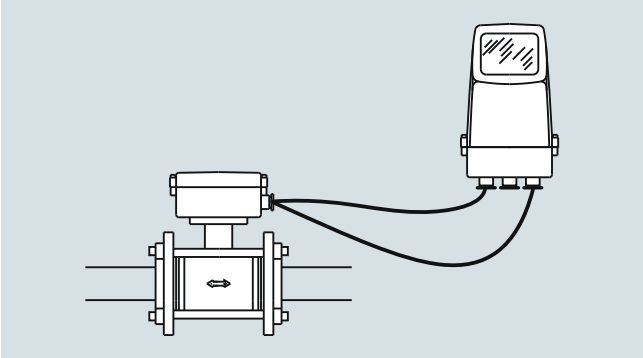

Remote installation

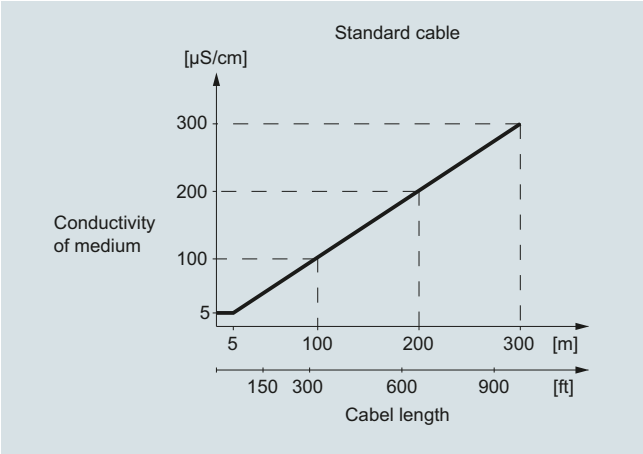

Minimum conductivity of medium (using standard electrode cable)

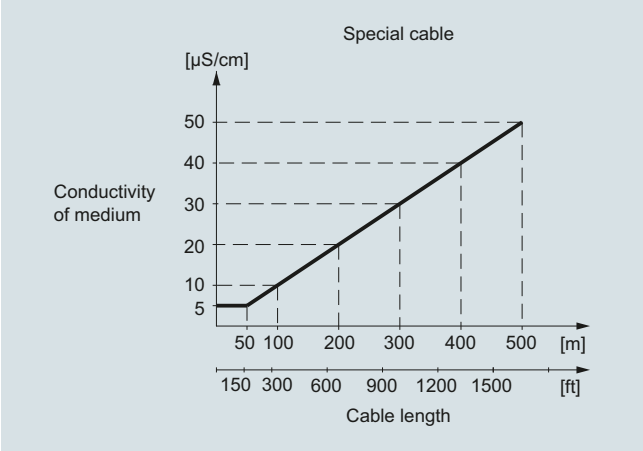

Minimum conductivity of medium (using special electrode cable)

Empty pipe detection

The installation has to fulfill the following limitations for usage of the empty pipe detection function:

- Media conductivity ≥ 20 µS/cm
- Length of cable at remote installation ≤ 50 m (150 ft)
- Special shield cable must be used

Note for MAG 1100 sizes DN 2 and DN 3:

- Empty pipe detection is not available

Note for MAG 5000/6000 CT:

- Empty pipe detection is not available

© Siemens 2020

Function

All electromagnetic flowmeters are based on Faraday's law of induction:

$U_M = B \cdot v \cdot d \cdot k$

U_M = Measured voltage induced in the medium perpendicular to the magnetic field and the flow direction. The voltage is tapped at two point electrodes.

B = Magnetic flux density which permeates the flowing medium perpendicular to the flow direction.

v = flow velocity of medium

d = internal diameter of metering tube

k = proportionality factor or sensor constant

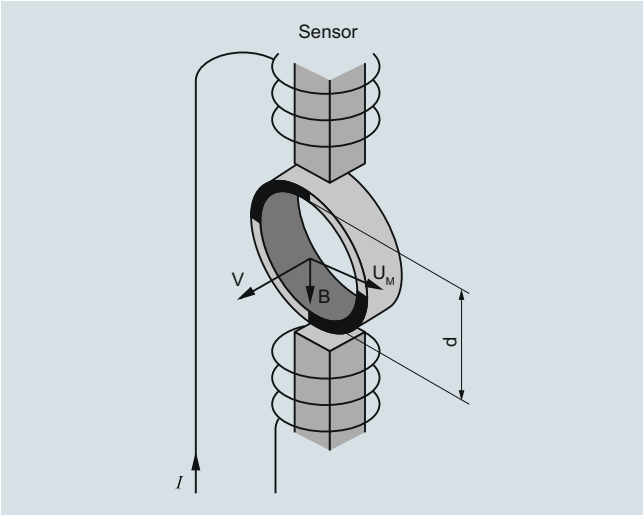

Function and measuring principle of electromagnetic measurement

An electromagnetic flowmeter generally consists of a magnetically non-conducting metering tube with an internal electrically non-conducting surface, magnet coils connected in series and mounted diametrically on the tube, and at least two electrodes which are inserted through the pipe wall and are in contact with the measured medium. The magnet field coils through which the current passes generate a pulsed electromagnetic field with the magnetic flux density B perpendicular to the pipe axis.

This magnetic field penetrates the magnetically non-conducting metering tube and the medium flowing through it, which must have a minimum electrical conductivity.

According to Faraday's law of induction, a voltage U_M is generated in an electrically conducting medium, and is proportional to the flow velocity v of the medium, the magnetic flux density B, and the distance between the electrodes d (internal diameter of pipe).

The signal voltage U_M is tapped by the electrodes which are in contact with the medium, and passed through the insulating pipe wall. The signal voltage U_M which is proportional to the flow velocity is converted by an associated transmitter into appropriate standard signals such as 4 to 20 mA.

SITRANS FM diagnostics

The diagnostic functions are all internal tools in the meter:

- Identification in clear text and error log
- Error categories: function; warning; permanent and fatal errors
- Transmitter self-check including all outputs and the accuracy
- Sensor check: coil and electrode circuit test
- Overflow
- Empty pipe: partial filling; low conductivity; electrode fouling

SITRANS FM Verificator (MAG 5000 and 6000)

The SITRANS FM Verificator is an external tool designed for MAG 5000 and MAG 6000 with MAG 1100, MAG 1100 F, MAG 3100, MAG 3100 P or MAG 5100 W sensors to verify the entire product, the installation and the application.

The goal is to improve operation, reduce downtime and maintain measurement accuracy as long as possible.

The SITRANS FM Verificator is highly advanced and carries out the complex verification and performance check of the entire flowmeter system, according to unique SIEMENS patented principles. The whole verification test is automated and easy to operate so there is no opportunity for human error or influence. The system is traceable to international standards and tested by WRc (Water Research Council).

SITRANS FM Verificator

- Stand alone Verificator to measure a number of selected parameters in the flow sensor and a transmitter which affects the integrity of the flow measurement.
- Up to 20 measurements can be stored in the Verificator.
- The Verificator can be connected via a serial cable to a PC enabling download of the data. A Windows program enables printing and management of verificator reports.

Verification - Steps

Verification of a SITRANS FM flowmeter consists of the following test routines:

1. Transmitter test
2. Flowmeter and cable insulation test
3. Sensor magnetism test

© Siemens 2020

Function (continued)

1. Transmitter test

The transmitter test is the traditional way of on-site testing on the market and checks the complete electronic system from signal input to output.

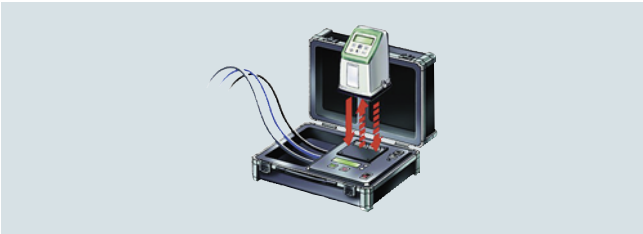

Transmitter test

Using the excitation power output, which is generated to drive the magnetic field of the sensor, the verificator simulates flow signal to the transmitter input. By measuring the transmitter outputs the verificator calculates its accuracy against defined values. Test includes:

- Excitation power to drive the magnetic field
- Signal function from signal input to output
- Signal processing – gain, offset and linearity
- Test of analogue and frequency output

2. Insulation test

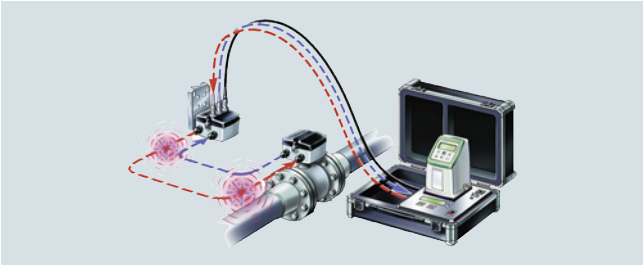

Flowmeter insulation test

The verification test of the flowmeter insulation is a “cross-talk” test of the entire flowmeter which ensures that the flow signal generated in the sensor is not affected by any external influences.

In the “cross-talk” test the verificator generates a high voltage disturbance within the coil circuit and then looks for any “cross-talk” induced in the flow signal circuit. By generating dynamic disturbances close-coupled to the flow signal, the flowmeter is tested for noise immunity to a maximum level:

- EMC influence on the flow signal
- Moisture in sensor, connection and terminal box
- Non-conductive deposit coating the electrodes within the sensor
- Missing or poor grounding, shielding and cable connection

3. Sensor magnetism test

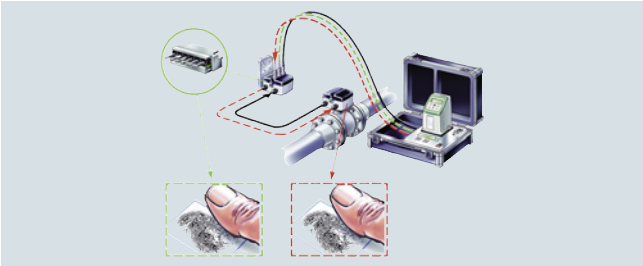

Sensor magnetism test

The verification of the sensor magnetism is a “boost” test of the magnetic field coil. The test ensures that the magnetism behaviour is like the first time, by comparing the current sensor magnetism with the “fingerprint” which was determined during initial calibration and stored in the SENSORPROM memory unit.

In the “boost” test the verificator changes the magnetic field in certain pattern and with high voltage to get quick stable magnetic condition. This unique test is fulfilled without any interference or compensation of surrounding temperature or interconnecting cabling.

- Changes in dynamic magnetic behaviour
- Magnetic influence inside and outside the sensor
- Missing or poor coil wire and cable connection

Certificate

The test certificate generated by a PC contains:

- Test result with passed or failed
- Installation specification
- Flowmeter specification and configuration
- Verificator specification with date of calibration ensuring traceability to international standards.

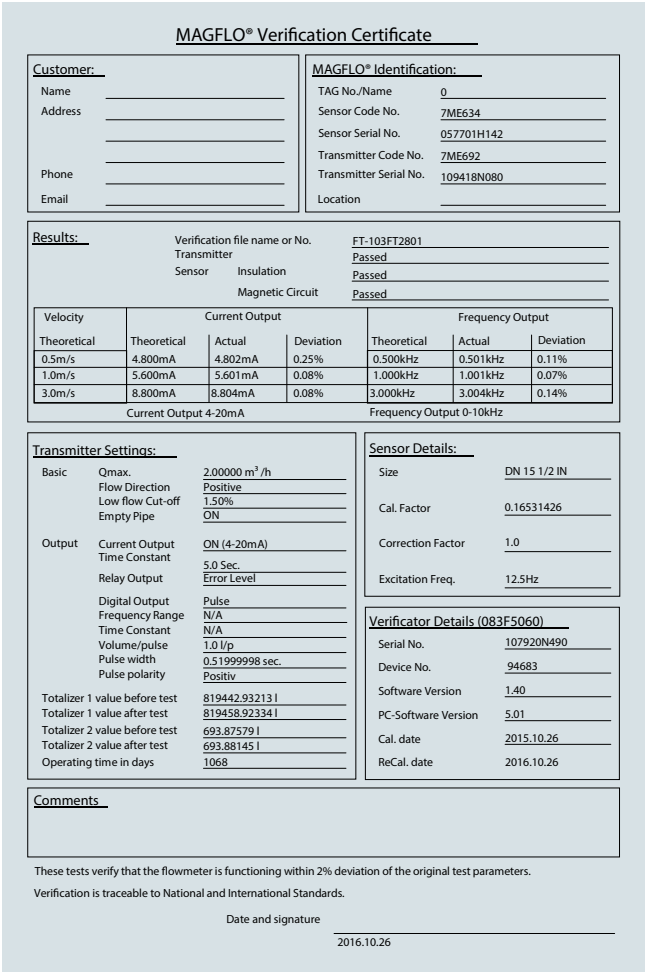

MAGFLO® Verification Certificate

Customer:
Name
Address
Phone
Email

MAGFLO® Identification:
TAG No./Name 0
Sensor Code No. 7ME634
Sensor Serial No. 057701H142
Transmitter Code No. 7ME692
Transmitter Serial No. 109418N080
Location

Results:
Verification file name or No. FT-103FT2801
Transmitter Passed
Sensor Insulation Passed
Magnetic Circuit Passed

Velocity	Current Output			Frequency Output		
Theoretical	Theoretical	Actual	Deviation	Theoretical	Actual	Deviation
0.5m/s	4.800mA	4.802mA	0.25%	0.500kHz	0.501kHz	0.11%
1.0m/s	5.600mA	5.601mA	0.08%	1.000kHz	1.001kHz	0.07%
3.0m/s	8.800mA	8.804mA	0.08%	3.000kHz	3.004kHz	0.14%
	Current Output 4-20mA			Frequency Output 0-10kHz		

Transmitter Settings:
Basic
Qmax. 2.00000 m³/h
Flow Direction Positive
Low flow Cut-off 1.50%
Empty Pipe ON
Output
Current Output ON (4-20mA)
Time Constant 5.0 Sec.
Relay Output Error Level
Digital Output Pulse
Frequency Range N/A
Time Constant N/A
Volume/pulse 1.0 l/p
Pulse width 0.51999998 sec.
Pulse polarity Positiv
Totalizer 1 value before test 819442.93213 l
Totalizer 1 value after test 819458.92334 l
Totalizer 2 value before test 693.87579 l
Totalizer 2 value after test 693.88145 l
Operating time in days 1068

Sensor Details:
Size DN 15 1/2 IN
Cal. Factor 0.16531426
Correction Factor 1.0
Excitation Freq. 12.5Hz

Verificator Details (083F5060)
Serial No. 107920N490
Device No. 94683
Software Version 1.40
PC-Software Version 5.01
Cal. date 2015.10.26
ReCal. date 2016.10.26

Comments

These tests verify that the flowmeter is functioning within 2% deviation of the original test parameters.
Verification is traceable to National and International Standards.

Date and signature
2016.10.26

Description	Article No.
SITRANS FM Verificator	
11 … 30 V DC, 11 … 24 V AC, 115 … 230 V, 50 Hz	**FDK:083F5060**
11 … 30 V DC, 11 … 24 V AC, 115 … 230 V, 60 Hz	**FDK:083F5061**

Note:
It is mandatory to have the Verificator returned to the factory once a year for check and re-verification.

© Siemens 2020

Overview

Transmitter MAG 5000/6000 compact version (left) and 19" insert version (right)

The MAG 5000 and 6000 are transmitters engineered for high performance, easy installation, commissioning and maintenance. The transmitters evaluate the signals from the SITRANS FM sensors type MAG 1100, MAG 1100 F, MAG 3100, MAG 3100 P and MAG 5100 W.

Transmitter types:

- MAG 5000: Max. measuring error ± 0.4 % ± 1 mm/s (incl. sensor)
- MAG 6000: Max. measuring error ± 0.2 % ± 1 mm/s (incl. sensor, see also sensor specifications) and with additional features such as: "plug & play" add-on bus modules; integrated batch functions.

Benefits

- Superior signal resolution for optimum turn down ratio
- Digital signal processing with many possibilities
- Automatic reading of SENSORPROM data for easy commissioning
- User configurable operation menu with password protection
- 3 lines, 20 characters display in 11 languages
- Flow rate in various units
- Totalizer for forward, reverse and net flow as well as additional information available
- Multiple functional outputs for process control, minimum configuration with analogue, pulse/frequency and relay output (status, flow direction, limits)
- Comprehensive self-diagnostic for error indication and error logging (see SITRANS FM diagnostics)
- Batch control (MAG 6000 only)
- Custody transfer approval: MI-001 for cold water, PTB K 7.2 and OE12/C 040 for chilled water
- MAG 6000 with add-on bus modules for HART, FOUNDATION Fieldbus H1, DeviceNet, Modbus RTU/RS485, PROFIBUS PA and DP

Application

The SITRANS FM flowmeters are suitable for measuring the flow of almost all electrically conductive liquids, pastes and slurries. The main applications can be found in:

- Water and waste water
- Chemical and pharmaceutical industries
- Food and beverage industries
- Power generation and utility

Design

The transmitter is designed as either IP67 NEMA 4X/6 enclosure for compact or wall mounting or 19" version as a 19" insert as a base to be used in:

- 19" rack systems
- Front panel mounting IP65/NEMA 2
- Panel mounting IP20/NEMA 1
- Wall mounting IP66/NEMA 4X

Several options on 19" versions are available such as:

- Transmitters mounted in safe area for Ex ATEX approved flow sensors (incl. barriers)
- Transmitters with electrode cleaning unit on request

© Siemens 2020

Function

The MAG 5000/6000 are transmitters with a built-in alphanumeric display in several languages. The transmitters evaluate the signals from the associated electromagnetic sensors and also fulfil the task of a power supply unit which provides the magnet coils with a constant current.

Further information on connection, mode of operation and installation can be found in the data sheets for the sensors.

Displays and controls

Operation of the transmitter can be carried out using:

- Control and display unit
- HART communicator
- PC/laptop and SIMATIC PDM software via HART communication
- PC/laptop and SIMATIC PDM software using PROFIBUS or Modbus communication

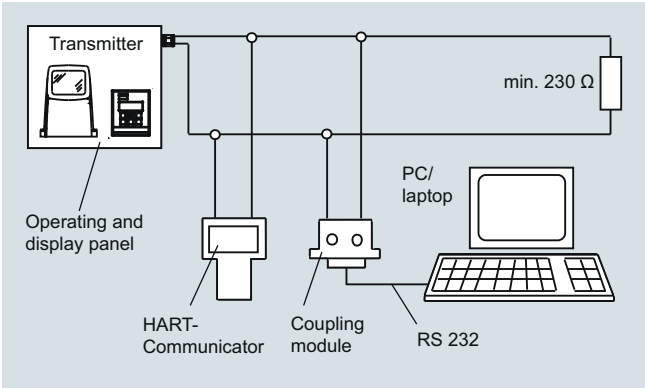

HART communication

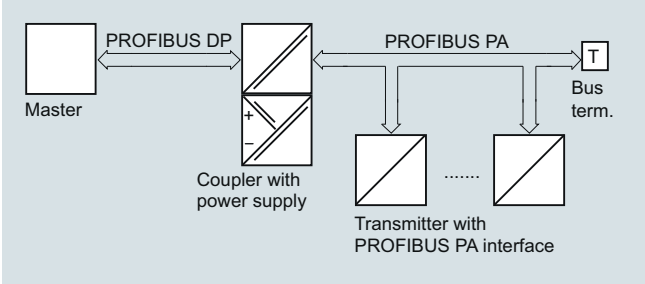

PROFIBUS PA communication

© Siemens 2020

Technical specifications

Mode of operation and design	
Measuring principle	Electromagnetic with pulsed constant field
Empty pipe	Detection of empty pipe (special cable required in remote mounted installation)
Excitation frequency	Depend on sensor size
Electrode input impedance	> 1 x 10^{14} Ω
Input	
Digital input	11 ... 30 V DC, R_i = 4. 4 KΩ
• Activation time	50 ms
• Current	$I_{11\ V\ DC}$ = 2.5 mA, $I_{30\ V\ DC}$ = 7 mA
Output	
Current output	
• Signal range	0 ... 20 mA or 4 ... 20 mA
• Load	< 800 Ω
• Time constant	0.1 … 30 s, adjustable
Digital output	
• Frequency	0 ... 10 kHz, 50 % duty cycle (uni/bidirectional)
• Pulse (active)	24 V DC, 30 mA, 1 kΩ ≤ R_i ≤ 10 kΩ, short-circuit-protected (power supplied from flowmeter)
• Pulse (passive)	3 … 30 V DC, max. 110 mA, 200 Ω ≤ R_i ≤ 10 kΩ powered from connected equipment)
• Time constant	0.1 … 30 s, adjustable
Relay output	
• Time constant	Changeover relay, same as current output
• Load	42 V AC/2 A, 24 V DC/1 A
Low flow cut off	0 ... 9.9 % of maximum flow
Galvanic isolation	All inputs and outputs are galvanically isolated
Max. measuring error (incl. sensor and zero point) (for detailed accuracy specifications see "System information")	
• MAG 5000	± 0.4 % ± 1 mm/s
• MAG 6000	± 0.2 % ± 1 mm/s
Rated operation conditions	
Ambient temperature	
• Operation	• Display version: -20 ... +60 C (-4 ... +140 F) • Blind version: -20 ... +60 C (-4 ... +140 F) • Custody transfer (CT) version -20 ... +50 °C (-4 ... +122 °F)
• Storage	-40 ... +70 C (-40 ... +158 F°)
Mechanical load (vibration)	
Compact version	18 ... 1000 Hz, 3.17 g RMS, sinusoidal in all directions to IEC 68-2-36
19“ insert	1 ... 800 Hz, 1 G, sinusoidal in all directions to IEC 68-2-36
Degree of protection	
Compact version	IP67/NEMA 4X/6 to IEC 529 and DIN 40050 (1 mH_2O 30 min.)
19“ insert	IP20/NEMA 1 to IEC 529 and DIN 40050
EMC performance	IEC/EN 61326-1 (all environments) IEC/EN 61326-2-5
Display and keypad	
Totalizer	Two eight-digit counters for forward, net or reverse flow
Display	Background illumination with alphanumeric text, 3 x 20 characters to indicate flow rate, totalized values, settings and faults; Reverse flow indicated by negative sign
Time constant	Time constant as current output time constant
Design	
Enclosure material	
• Compact version	Fiber glass reinforced polyamide; stainless steel AISI 316/1.4436 (IP65)
• 19“-insert	Standard 19“ insert of aluminium/steel (DIN 41494), width: 21 TE, height: 3 HE
• Back of panel	IP20/NEMA 1; Aluminium
• Panel mounting	IP20/NEMA 1 (prepared for IP65/NEMA 2 display side); ABS plastic
• Wall mounting	IP66/NEMA 4X; ABS plastic
Dimensions	
• Compact version	See dimensional drawings
• 19“ insert	See dimensional drawings
Weight	
• Compact version	0.75 kg (2 lbs)
• 19“ insert	See dimensional drawings
Power supply	• 115 ... 230 V AC +10 % -15 %, 50 ... 60 Hz • 11 ... 30 V DC or 11 ... 24 V AC
Power consumption	• 230 V AC: 17 VA • 24 V AC: 9 VA, I_N = 380 mA, I_{ST} = 8 A (30 ms) • 12 V DC: 11 W, I_N = 920 mA, I_{ST} = 4 A (250 ms) • 24 V DC: 8.4 VA, I_N = 350 mA, I_{ST} = 4 A (10 ms) I_{ST}= 4 A (250 ms): For solar panel please securestable current supply
Certificates and approvals	
General purpose	• CE (LVD, EMC, PED, RoHS) • UL (c-UL-us)
Hazardous area	• FM, CSA - NI Class I Div. 2 Groups A, B, C, D
Custody transfer	• Cold water: MI-001 • Chilled water - PTB K 7.2 (Germany) - OE 12/C 040 (Austria)
Marine (only for remote version with MAG 5100 W, DN 50 ... DN 300)	• ABS • Bureau Veritas • DNV-GL • Lloyd's Register
Others	• CPA (China) • EAC (Russia, Belarus, Kazakhstan) • KCs (South Korea)
Communication	
Standard	
• MAG 5000	HART 5.2 optional
• MAG 6000	Optional as add-on modules: • HART 5.2 • Modbus RTU/RS 485, • FOUNDATION Fieldbus H1 • DeviceNet, • PROFIBUS PA • PROFIBUS DP

© Siemens 2020

Technical specifications (continued)

Safety barrier (e/ia)

Application	**For use with MAG 5000/6000 19" and MAG 1100 Ex/MAG 3100 Ex**		
Ex approval	MAG 1100 Ex [EEx e ia] IIB ATEX, EAC Ex		
	MAG 3100 Ex [EEx e ia] IIC ATEX, EAC Ex		
Cable parameter	Group	Capacity in µF	Inductance in mH
Electrode	IIC	≤ 4.1	≤ 80
	IIB	≤ 45	≤ 87
	IIA	≤ 45	≤ 87
Ambient temperature			
• During operation	-20 ... +50 °C (-4 ... +122 °F)		
• During storage	-20 ... +70 °C (-4 ... +158 °F)		
Enclosure			
• Material	Standard 19" insert in aluminum/steel (DIN 41494)		
• Width	21 TE (4.75")		
• Height	3 HE (5.25")		
• Rating	IP20/NEMA 1 to EN 60529		
• Mechanical load	1 g, 1 … 800 Hz sinusoidal in all directions to EN 60068-2-36		

Selection and ordering data

Transmitter MAG 5000

Description	Article No.	
Transmitter MAG 5000 Blind for compact and wall mounting; IP67/NEMA 4X/6, fibre glass reinforced polyamide		
• 11 … 30 V DC/11 … 24 V AC	**7ME6910-1AA30-0AA0**	
• 115 … 230 V AC, 50/60 Hz	**7ME6910-1AA10-0AA0**	
Transmitter MAG 5000 Display for compact and wall mounting; IP67/NEMA 4X, fibre glass reinforced polyamide		
• 11 … 30 V DC/11 … 24 V AC	**7ME6910-1AA30-1AA0**	
• 115 … 230 V AC, 50/60 Hz	**7ME6910-1AA10-1AA0**	
• 115 … 230 V AC, 50/60 Hz, with HART	**7ME6910-1AA10-1BA0**	
Transmitter MAG 5000 CT for compact and wall mounting, approved for custody transfer, without verification (no approval marks - only a complete flowmeter can be verified, i.e. sensor together with the transmitter); IP67/NEMA 4X/6, fibre glass reinforced polyamide		
• 11 … 30 V DC/11 … 24 V AC	**7ME6910-1AA30-1AD0**	
• 115 … 230 V AC, 50/60 Hz	**7ME6910-1AA10-1AD0**	
Transmitter MAG 5000 for 19" rack and wall mounting		
• 11 … 30 V DC/11 … 24 V AC	**7ME6910-2CA30-1AA0**	
• 115 … 230 V AC, 50/60 Hz	**7ME6910-2CA10-1AA0**	

Transmitter MAG 6000

Description	Article No.	
Transmitter MAG 6000 Blind for compact and wall mounting; IP67/NEMA 4X/6, fibre glass reinforced polyamide		
• 11 … 30 V DC/11 … 24 V AC	**7ME6920-1AA30-0AA0**	
• 115 … 230 V AC, 50/60 Hz	**7ME6920-1AA10-0AA0**	
Transmitter MAG 6000 Display for compact and wall mounting; IP67/NEMA 4X, fibre glass reinforced polyamide		
• 11 … 30 V DC/11 … 24 V AC	**7ME6920-1AA30-1AA0**	
• 115 … 230 V AC, 50/60 Hz	**7ME6920-1AA10-1AA0**	
Transmitter MAG 6000 for compact and wall mounting; IP65/NEMA 4, stainless steel AISI 316/1.4436 (only for sensor with stainless steel terminal box) (for remote version order stainless steel terminal box separately)		
• 11 … 30 V DC/11 … 24 V AC	**7ME6920-1QA30-1AA0**	
• 115 … 230 V AC, 50/60 Hz	**7ME6920-1QA10-1AA0**	

© Siemens 2020

Selection and ordering data (continued)

Description	Article No.	
Transmitter MAG 6000 CT for compact and wall mounting, approved for custody transfer, without verification (no approval marks - only a complete flowmeter can be verified, i.e. sensor together with the transmitter); IP67/NEMA 4X/6, fibre glass reinforced polyamide		
• 11 … 30 V DC/11 … 24 V AC	**7ME6920-1AA30-1AD0**	
• 115 … 230 V AC, 50/60 Hz	**7ME6920-1AA10-1AD0**	
Transmitter MAG 6000 SV for compact and wall mounting; special excitation frequency 44 Hz for Batch application DN ≤ 25/1" IP67/NEMA 4X/6, fibre glass reinforced polyamide		
• 11 … 30 V DC/11 … 24 V AC	**7ME6920-1AB30-1AA0**	
• 115 … 230 V AC, 50/60 Hz	**7ME6920-1AB10-1AA0**	
Transmitter MAG 6000 for 19" rack and wall mounting		
• 11 … 30 V DC/11 … 24 V AC	**7ME6920-2CA30-1AA0**	
• 115 … 230 V AC, 50/60 Hz	**7ME6920-2CA10-1AA0**	
Transmitter MAG 6000 SV for 19" rack and wall mounting; special excitation frequency 44 Hz for Batch application DN ≤ 25/1"		
• 11 … 30 V DC/11 … 24 V AC	**7ME6920-2CB30-1AA0**	
• 115 … 230 V AC, 50/60 Hz	**7ME6920-2CB10-1AA0**	
MAG 6000 19" insert, complete mounted with IP66/NEMA 4X wall mounting enclosure in ABS plastic;115 ... 230 V AC, 50/60 Hz; cable gland PG13.5	**7ME6920-2EA10-1AA0**	
MAG 6000 19" insert with safety barrier for Ex-approved sensors, complete mounted with IP66/NEMA 4X wall mounting enclosure in ABS plastic, 115 ... 230 V AC, 50/60 Hz; cable gland PG13.5		
• For ATEX 2G D sensors	**7ME6920-2MA11-1AA0**	
MAG 6000 SV 19" insert, complete mounted with IP66/NEMA 4X wall mounting enclosure in ABS plastic, special excitation frequency 44 Hz for Batch application DN ≤ 25/1"; cable gland PG13.5		
• 11 … 30 V DC/11 … 24 V AC	**7ME6920-1EB30-1AA0**	
• 115 … 230 V AC, 50/60 Hz	**7ME6920-1EB10-1AA0**	

Operating instructions for SITRANS FM MAG 5000/6000

Description	Article No.
For SITRANS FM MAG 5000/6000 IP67	
• English	**A5E02338368**
• German	**A5E02944982**
For SITRANS FM MAG 5000/6000 19"	
• English	**A5E02082880**

All literature is available to download for free, in a range of languages, at
http://www.siemens.com/processinstrumentation/documentation

Communication modules for MAG 6000

Description	Article No.
HART (not for MAG 6000 I)	**FDK:085U0226**
Modbus RTU/RS485	**FDK:085U0234**
PROFIBUS PA Profile 3	**FDK:085U0236**
PROFIBUS DP Profile 3	**FDK:085U0237**
DeviceNet	**FDK:085U0229**
FOUNDATION Fieldbus H1	**A5E02054250**

Operating instructions for SITRANS F add-on modules

Description	Article No.
HART	
• English	**A5E03089708**
PROFIBUS PA/DP	
• English	**A5E00726137**
• German	**A5E01026429**
Modbus	
• English	**A5E00753974**
• German	**A5E03089262**
FOUNDATION Fieldbus	
• English	**A5E02318728**
• German	**A5E02488856**
DeviceNet	
• English	**A5E03089720**

This device is shipped with Safety Notes and a DVD containing further SITRANS FM literature.

All literature is available to download for free, in a range of languages, at
http://www.siemens.com/processinstrumentation/documentation

© Siemens 2020

Selection and ordering data (continued)

Accessories for MAG 5000 and MAG 6000

Description	Article No.	
Accessory kit for remote use of sensor with two 5-pin terminal blocks	**A5E34827189**	
Wall mounting unit for MAG 5000/6000 with IP67/NEMA 4X/6, terminal box in polyamide[2)]		
• 4 × M20 cable glands	**FDK:085U1018**	
• 4 × ½" NPT cable glands	**FDK:085U1053**	
Special wall mounting unit for MAG 5000/6000 IP67/NEMA 4X/6, mounting bracket in stainless steel AISI 316 (1.4401), terminal box in polyamide		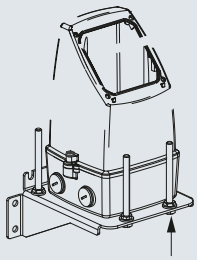
• 4 × M20 cable glands	**A5E36699702**	
• 4 × ½" NPT cable glands	**A5E36699938**	
Sun lid for MAG 5000/6000 transmitter (Frame and lid)	**A5E02328485**	
Standard coil or electrode cable, 3 × 1.5 mm²/18 gage, single shielded with PVC jacket; Temperature range -30 °C … +70 °C (-22 °F … +158 °F)		
• 5 m (16.5 ft)	**A5E02296523**	
• 10 m (33 ft)	**FDK:083F0121**	
• 20 m (65 ft)	**FDK:083F0210**	
• 30 m (98 ft)	**A5E02297309**	
• 40 m (131 ft)	**FDK:083F0211**	
• 50 m (164 ft)	**A5E02297317**	
• 60 m (197 ft)	**FDK:083F0212**	
• 100 m (328 ft)	**FDK:083F0213**	
• 150 m (492 ft)	**FDK:083F3052**	
• 200 m (656 ft)	**FDK:083F3053**	
• 500 m (1640 ft)	**FDK:083F3054**	
Special electrode cable[1)] (empty pipe detection or low conductivity), 3 × 0.25 mm² double shielded with PVC jacket, Temperature range -30 °C … +70 °C (-22 °F … +158 °F)		
• 10 m (33 ft)	**FDK:083F3020**	
• 20 m (65 ft)	**FDK:083F3095**	
• 40 m (131 ft)	**FDK:083F3094**	
• 60 m (197 ft)	**FDK:083F3093**	
• 100 m (328 ft)	**FDK:083F3092**	
• 150 m (492 ft)	**FDK:083F3056**	
• 200 m (656 ft)	**FDK:083F3057**	
• 500 m (1640 ft)	**FDK:083F3058**	

Description	Article No.	
Low-noise electrode coaxial cable for low conductivity and high vibration levels, 3 × 0.13 mm², Temperature range -25 °C … +85 °C (-13 °F … +185 °F)		
• 2 m (6.6 ft)	**A5E02272692**	
• 5 m (16.5 ft)	**A5E02272723**	
• 10 m (33 ft)	**A5E02272730**	
Cable kit including standard coil cable (3 × 1.5 mm²/18 gage, single shielded with PVC jacket) and special electrode cable[1)] (3 × 0.25 mm², double shielded with PVC jacket). Temperature range -30 °C … +70 °C (-22 °F … +158 °F)		
• 5 m (16.5 ft)	**A5E02296329**	
• 10 m (33 ft)	**A5E01181647**	
• 15 m (49 ft)	**A5E02296464**	
• 20 m (65 ft)	**A5E01181656**	
• 25 m (82 ft)	**A5E02296490**	
• 30 m (98 ft)	**A5E02296494**	
• 40 m (131 ft)	**A5E01181686**	
• 50 m (164 ft)	**A5E02296498**	
• 60 m (197 ft)	**A5E01181689**	
• 100 m (328 ft)	**A5E01181691**	
• 150 m (492 ft)	**A5E01181699**	
• 200 m (656 ft)	**A5E01181703**	
• 500 m (1640 ft)	**A5E01181705**	
Potting kit for IP68/NEMA 6P sealing of sensor junction box	**FDK:085U0220**	
19" safety barrier (21 TE)[1)] [EEx e ia] IIC for MAG 1100 Ex sensors 12 ... 24 V, 115 ... 230 V and MAG 3100 Ex sensors, incl. back plate (A5E02559810)	**FDK:083F5034**	
Front panel mounting enclosure IP65/NEMA 2 in ABS plastic for 19" insert (21 TE)	**FDK:083F5030**	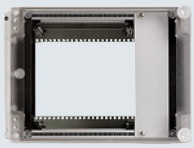
Front panel mounting enclosure IP65/NEMA 2 in ABS plastic for 19" insert (42 TE)	**FDK:083F5031**	

1) Safety cables cannot be used with 19" safety barrier

2) For stainless steel wall mounting kit, order:
- M20: FDK:085U1018 and A5E00836867
- ½ NPT: FDK:085U1053 and A5E00836868

© Siemens 2020

Selection and ordering data (continued)

Description	Article No.	
Panel mounting enclosure IP20/NEMA 1 in aluminum for 19“ insert (21 TE)	**FDK:083F5032**	
Panel mounting enclosure IP20/NEMA 1 in aluminum for 19“ insert (42 TE)	**FDK:083F5033**	
Wall mounting enclosure IP66/NEMA 4X in ABS plastic for 19" insert (cable glands and connection board not included).		
• 21 TE	**FDK:083F5037**	
• 42 TE	**FDK:083F5038**	
Front cover (7TE) for panel mounting enclosure	**FDK:083F4525**	
Sun shield for MAG 5000/6000 transmitter in remote design	**A5E01209496**	
Sun Shield for MAG 5000/6000 transmitter in compact design on MAG 3100 (DN 15 ... 2000 (½" ... 78") or MAG 5100 W (DN 150 ... 1200 (6" ... 48")	**A5E01209500**	

Spare parts

Description	Article No.	
Connection board (for polyamide terminalbox)		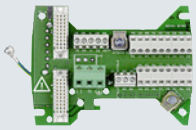
• 12 … 24 V	**A5E02559817**	
• 115 … 230 V	**A5E02559816**	
Connection board (for stainless steel terminalbox)		
• 12 … 24 V	**A5E02604280**	
• 115 … 230 V	**A5E02604272**	
Connection board MAG 5000/6000 19" insert for panel mounting enclosure, 12 ... 24 V/115 ... 230 V	**A5E02559809**	
Connection board MAG 5000/6000 19" insert with safety barrier for panel mounting enclosure, 12 ... 24 V/115 ... 230 V	**A5E02559810**	
Connection board MAG 5000/6000 19" insert with safety barrier for panel mounting enclosure, 12 ... 24 V/115 ... 230 V (only for sensors produced before October 2007)	**A5E02559811**	
Connection board MAG 5000/6000 19" insert with cleaning unit for panel mounting enclosure, 12 ... 24 V/115 ... 230 V	**FDK:083F4123**	
SENSORPROM memory unit (Sensor code and serial numbers must be specified on order)		
• 2 kB (for MAG 5000/6000/6000 I)		
- 1 pc.	**FDK:085U1005**	
- 10 pcs.	**FDK:083F5052**	
• 250 B (for MAG 2500/3000)	**FDK:085U1008**	
Display unit for MAG 5000/6000		
• Black neutral front	**FDK:085U1038**	
• SIEMENS front	**FDK:085U1039**	
HW key	**On request**	

© Siemens 2020

Selection and ordering data (continued)

Description	Article No.	
Cable glands (polyamide), 4 pcs. • M20 • ½" NPT • PG 13.5, 2 pcs.	 **A5E00822490** **A5E00822501** **FDK:083G0228**	 ½" NPT M20
Sealing screws for sensor/transmitter, 2 pcs.	**FDK:085U0221**	
Terminal box, in polyamide, inclusive lid, terminal blocks, gasket and screws • M20 • ½" NPT	 **FDK:085U1050** **FDK:085U1052**	
Terminal box lid, in polyamide	**FDK:085U1003**	
Terminal box, in stainless steel, inclusive lid, terminal blocks, gasket and screws, for MAG 6000 in stainless steel and for all Ex sensors • M20 • ½" NPT	 **A5E00836867** **A5E00836868**	
Terminal box (3A) for MAG 1100 F in polyamide, inclusive lid, terminal blocks, gasket and screws • M20 • ½" NPT	 **A5E00822478** **A5E00822479**	
Gasket for terminal box lid in polyamide or for MAG 5000/ 6000 IP67/ NEMA 4X/6 enclosure in polyamide (5 pcs.)	**A5E37086797**	
Spare part kit for remote use of sensor with twenty 5-pin terminal blocks	**A5E34346873**	
Display frame in polyamide for MAG 5000/6000 IP67/ NEMA 4X/6 (5 pcs.)	**A5E43491675**	
Connection board MAG 5000/6000 19" insert for wall mounting enclosure, 12 ... 24 V/115 ... 230 V	**A5E02559813**	

Description	Article No.	
Connection board MAG 5000/6000 19" insert with safety barrier for wall mounting enclosure, 12 ... 24 V/115 ... 230 V	**A5E02559814**	
Connection board MAG 5000/6000 19" insert with safety barrier for wall mounting enclosure, 12 ... 24 V/115 ... 230 V (only for sensors produced before October 2007)	**A5E02559812**	
Connection board MAG 5000/6000 19" insert with cleaning unit for wall mounting enclosure, 12 ... 24 V/115 ... 230 V	**A5E02559815**	
SENSORPROM programmer with RS 232 interface	**FDK:083H4246**	

© Siemens 2020

Dimensional drawings

Transmitter IP67/NEMA 4X/6 compact polyamide

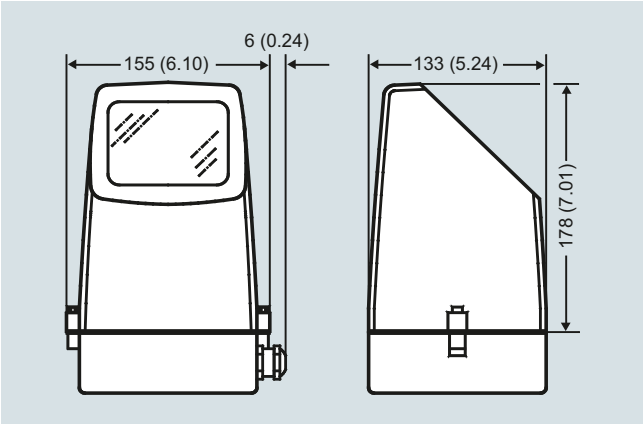

Transmitter compact mounted, dimensions in mm (inch)

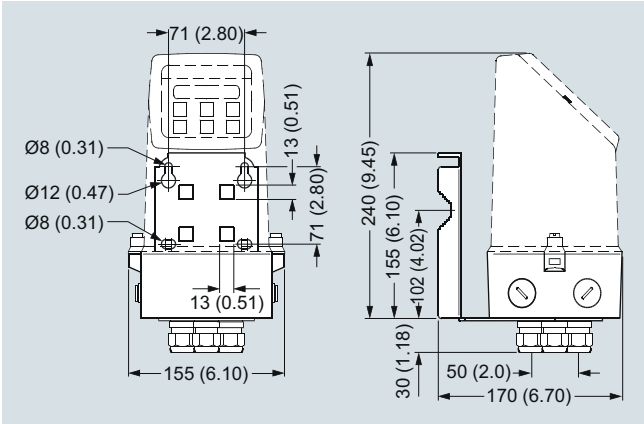

Transmitter wall mounted, dimensions in mm (inch)

Transmitter, 19" IP20/NEMA 1 standard unit

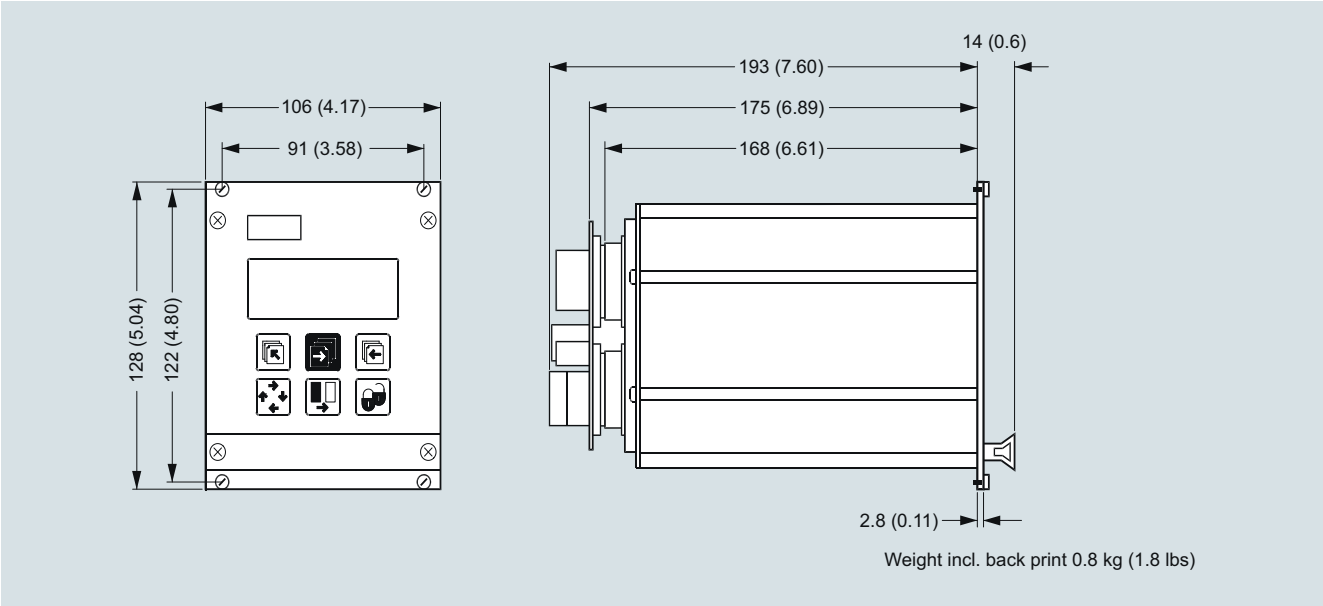

Dimensions in mm (inch)

© Siemens 2020

Dimensional drawings (continued)

Transmitter, wall mounting IP66/NEMA 4X, 21 TE

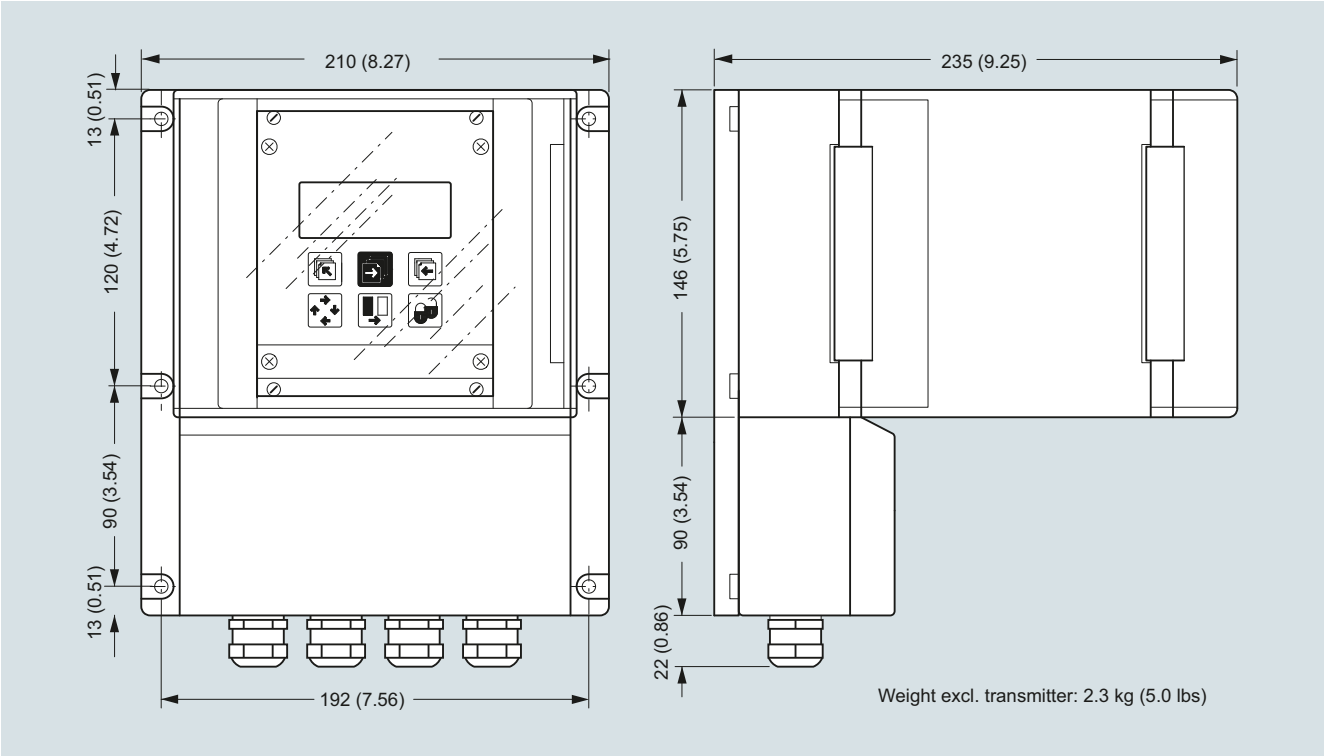

Dimensions in mm (inch)

Transmitter, wall mounting IP66/NEMA 4X, 42 TE

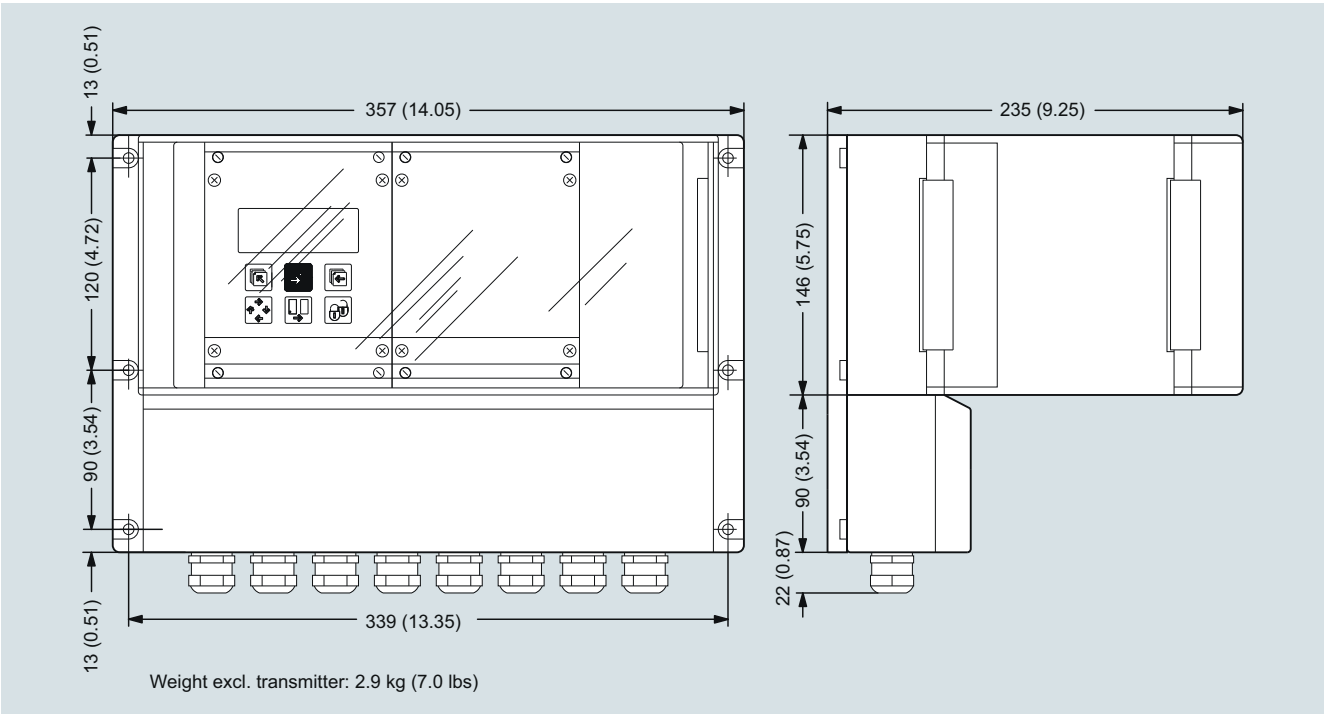

Dimensions in mm (inch)

© Siemens 2020

Dimensional drawings (continued)

Transmitter, front panel mounting IP65/NEMA 2, 21 TE

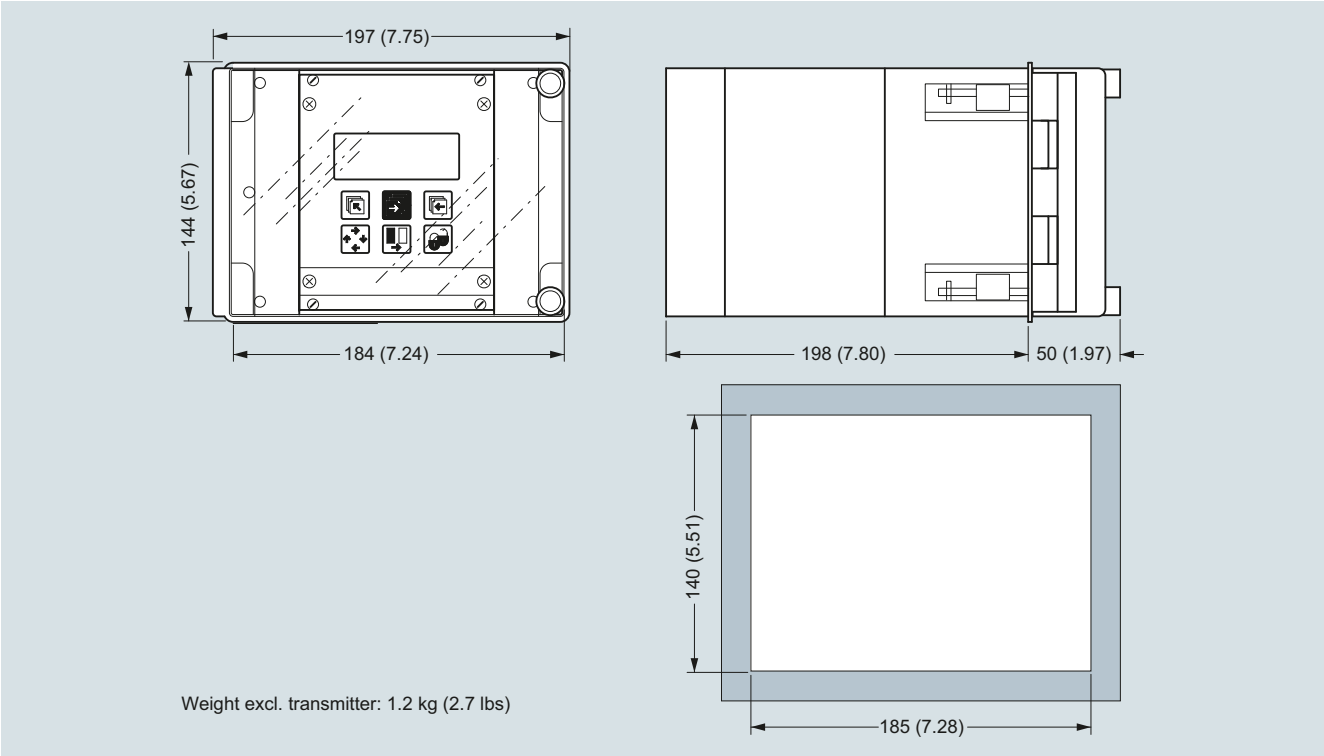

Dimensions in mm (inch)

Transmitter, front panel mounting IP65/NEMA 2, 42 TE

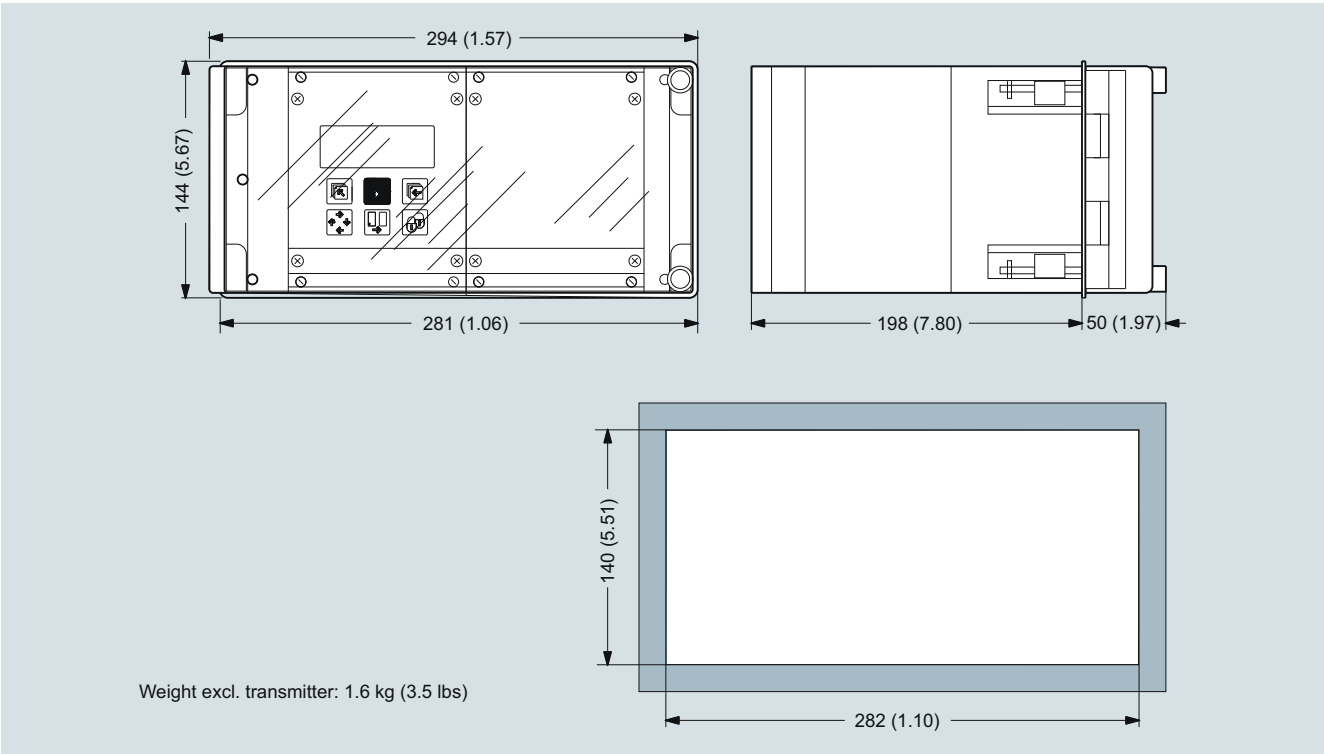

Dimensions in mm (inch)

© Siemens 2020

Dimensional drawings (continued)

Transmitter, panel mounting IP20/NEMA 1, 21 TE

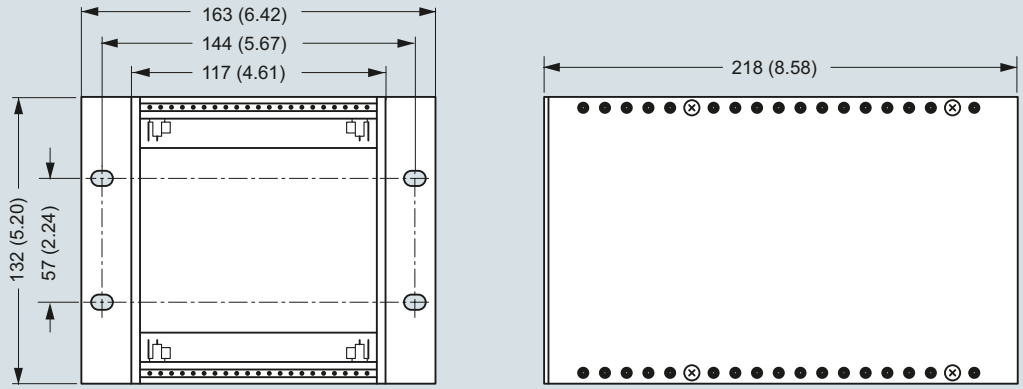

Weight: 0.7 kg (1.6 lbs)

Dimensions in mm (inch)

Transmitter, panel mounting IP20/NEMA 1, 42 TE

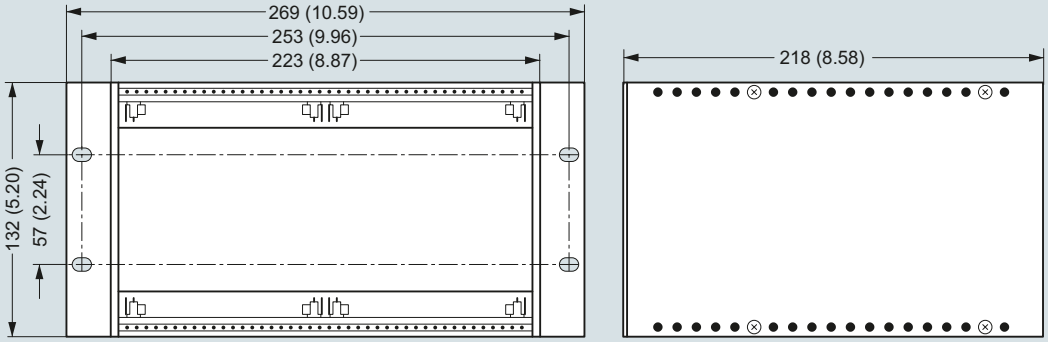

Weight: 0.9 kg (2.0 lbs)

Dimensions in mm (inch)

© Siemens 2020

Overview

The SITRANS FM MAG 6000 I/MAG 6000 I Ex de transmitter is designed for the demands in the process industry. The robust die cast aluminum housing provides superb protection, even in the most harsh industrial environments. Full input and output functionality is given even in the Ex version.

Benefits

- Full range of Ex-rated flowmeters with intrinsically safe rated input and outputs
- For compact or remote installation
- HART, FOUNDATION Fieldbus H1, DeviceNet, PROFIBUS PA and DP, Modbus RTU/RS485 add-on communication modules available
- Superior signal resolution for optimum turn down ratio
- Digital signal processing with many possibilities
- Automatic reading of SENSORPROM data for easy commissioning
- User configurable operation menu with password protection
  - 3 lines, 20 characters display in 11 languages
  - Flow rate in various units
  - Totalizer for forward, reverse and net flow as well as much more information available
- Multiple functional outputs for process control, minimum configuration with analogue, pulse/frequency and relay output (status, flow direction, limits)
- Comprehensive self-diagnostic for error indication and error logging
- Batch control
- MAG 6000 I NAMUR: compliant with NAMUR NE 21, NE 32, NE 43, NE 53 and NE 70

Design

The transmitter is designed for either compact or remote installation in non-hazardous or hazardous areas (compact mounted transmitter to be ordered together with the sensor).

Function

The following functions are available:

- Flow rate
- 2 measuring ranges
- 2 totalizers
- Low flow cut-off
- Flow direction
- Error system
- Operating time
- Uni-/bidirectional flow
- Limit switches and pulse output
- Batch control

The MAG 6000 I/6000 I Ex de is a microprocessor-based transmitter with a built-in alphanumeric display in several languages. The transmitters evaluate the signals from the associated electromagnetic sensors and also fulfil the task of a power supply unit which provides the magnet coils with a constant current.

Further information on connection, mode of operation and installation can be found in the data sheets for the sensors.

Displays and keypads

Operation of the transmitter can be carried out using:

- Keypad and display unit
- HART communicator
- PC/laptop and SIMATIC PDM software via HART communication
- PC/laptop and SIMATIC PDM software using PROFIBUS or Modbus communication

© Siemens 2020

Technical specifications

Mode of operation and design	
Measuring principle	Electromagnetic with pulsed constant field
Empty pipe	Detection of empty pipe (special cable required in remote mounted installation)
Excitation frequency	Depend on sensor size
Electrode input impedance	> 1 x 10^{14} Ω
Input	
Digital input	11 … 30 V DC, Ri = 4.4 kΩ
• Activation time	50 ms
• Current	$I_{11\ V\ DC}$ = 2.5 mA, $I_{30\ V\ DC}$ = 7 mA
Output	
Current output	
• Signal range	4 … 20 mA (active/passive)
• Load	< 560 Ω
• Time constant	0.1 … 30 s, adjustable
Digital output	
• Frequency	0 … 10 kHz, 50 % duty cycle (uni-/bidirectional)
• Time constant	0.1 … 30 s, adjustable
• Pulse (passive)	3 … 30 V DC, max. 110 mA (30 mA Ex version), 200 Ω ≤ Ri ≤ 10 kΩ (powered from connected equipment)
• Time constant	0.1 … 30 s, adjustable
Relay output	
• Time constant	Changeover relay, same as current output
• Load	42 V AC/2 A, 24 V DC/1 A
Low flow cut off	0 … 9.9 % of maximum flow
Galvanic isolation	All inputs and outputs are galvanic isolated.
Max. measuring error	
MAG 6000 I/MAG 6000 I Ex (incl. sensor)	± 0.2 % ± 1 mm/s
Rated operation conditions	
Ambient temperature	
• Operation	
- MAG 6000 I	-25 … +60 °C (-13 … +140 °F)
- MAG 6000 I Ex	-25 … +60 °C (-13 … 140 °F)
• Storage	-40 … +70 °C (-40 … +158 °F)
Mechanical load	18 … 1000 Hz random in x, y, z, directions for 2 hours according to EN 60068-2-36
	Transmitter: 1.14 g RMS
Degree of protection	IP67/NEMA 4X to IEC 529 and DIN 40050 (1 mH_2O 30 min.)
EMC performance	IEC/EN 61326-1 (all environments) IEC/EN 61326-2-5 NAMUR NE 21
Display and keypad	
Totalizer	Two eight-digit counters for forward, net or reverse flow
Display	Background illumination with alphanumeric text, 3 x 20 characters to indicate flow rate, totalized values, settings and faults; Reverse flow indicated by negative sign
Keypad	Capacitive touch keypad with LED light for feedback indication
Time constant	Time constant as current output time constant

Design	
Enclosure material	Die cast aluminum, with corrosion resistant Basic Polyester powder coating (min. 60 µm)
• Wall mounting	Wall mounting bracket enclosed for remote version
Dimensions	See dimensional drawings
Weight	See dimensional drawings
Power supply	• Standard transmitter: 18 … 90 V DC; 115 … 230 V AC; 50 … 60 Hz
	• Ex transmitter: 18 … 30 V DC
	• Ex transmitter: 115 … 230 V AC; 50 … 60 Hz
	• Ex transmitter NAMUR: 18 … 30 V DC; 115 … 230 V AC; 50 … 60 Hz
Power consumption	• 230 V AC: 20 VA
	• 24 V DC: 9.6 W, I_N = 0.4 A, I_{ST} = 1 A (3 ms)
Certificates and approvals	
General purpose	• CE (LVD, EMC, PED, RoHS)
Hazardous areas	• ATEX, IECEx, FM, CSA, EAC Ex, NEPSI - Zone 1 Ex d e [ia] ia IIC T6 Gb • ATEX, IECEx, CSA - Zone 21 Ex tD A21 IP67 T85 °C • FM - XP IS Class I Div. 1 Groups A, B, C, D - DIP Class II+III Div. 1 Groups E, F, G
Others	• CPA (China) • EAC (Russia, Belarus, Kazakhstan) • KCs (South Korea)
Cable entries	
MAG 6000 I	
• Power supply and outputs	2 x M20 (HART)/M25 (PROFIBUS) or 2 x ½" NPT (HART)
• Sensor connection	2 x M16 or 2 x ½" NPT
MAG 6000 I Ex ATEX 2GD	
• Power supply and outputs	2 x M20
• Sensor connection	2 x M16
Communication	
Standard versions	HART, Modbus RTU/RS 485, FOUNDATION Fieldbus H1, DeviceNet, PROFIBUS PA, PROFIBUS DP add-on modules
Ex versions	HART, PROFIBUS PA (not for Ex version)

[1] Applicable for: Compact mounted MAG 6000 I Ex on MAG 3100 (sizes DN 15 ... DN 300 (½" ... 12")).

© Siemens 2020

Selection and ordering data

	Article No.								
SITRANS FM Transmitter MAG 6000 I ↗	**7ME6930-**								
Remote with standard wall mounting bracket, local display, die cast aluminum	**2**	**B**	**A**	■	■	**-**	**1**	■	**A** ■
↗ Click on the Article No. for the online configuration in the PIA Life Cycle Portal.									
Supply voltage									
Standard transmitter: 18 ... 90 V DC; 115 ... 230 V AC, 50 ... 60 Hz			**2**						
Standard transmitter (NAMUR): 18 ... 30 V DC; 115 ... 230 V AC, 50 ... 60 Hz			**3**						
Ex transmitter: 18 ... 30 V DC			**4**						
Ex transmitter: 115 ... 230 V AC, 50 ... 60 Hz			**5**						
Ex transmitter (NAMUR): 18 ... 30 V DC; 115 ... 230 V AC, 50 ... 60 Hz			**6**						
Ex approval									
Standard sensor: FM Class I, Div 2, CSA Class I, Div 2					**0**				
Ex sensor: Hazardous area (ATEX 2 GD; FM Class I, Zone 1; CSA Class I, Zone 1)					**2**				
Communication									
None							**A**		
HART							**B**		
PROFIBUS PA Profile 3							**F**		
PROFIBUS DP Profile 3 (not for Ex version)							**G**		
Modbus RTU/RS 485 (not for Ex version)							**E**		
FOUNDATION Fieldbus H1							**J**		
Cable gland entries									
Metric									**0**
½" NPT									**2**

Further design	Order code
Please add "**-Z**" to Article No. and specify Order code(s) and plain text	
Tag name plate, stainless steel (specify in plain text)	**Y17**
Tag name plate, plastic (self adhesive)	**Y18**
Special version (specify in plain text)	**Y99**

Operating instructions for SITRANS FM MAG 6000 I

Description	Article No.
• English	**A5E02083319**
• German	**A5E02210835**

All literature is available to download for free, in a range of languages, at
http://www.siemens.com/processinstrumentation/documentation

Communication modules for MAG 6000 I (All standard outputs can still be used)

Description	Article No.
HART (only for MAG 6000 I/Ex)	**FDK:085U0321**
Modbus RTU/RS 485[1)]	**FDK:085U0234**
PROFIBUS PA Profile 3	**FDK:085U0236**
PROFIBUS DP Profile 3[1)]	**FDK:085U0237**
DeviceNet[1)]	**FDK:085U0229**
FOUNDATION Fieldbus H1	**A5E02054250**

[1)] Not for Ex versions

Operating instructions for SITRANS F add-on modules

Description	Article No.
HART	
• English	**A5E03089708**
PROFIBUS PA/DP	
• English	**A5E00726137**
• German	**A5E01026429**
Modbus	
• English	**A5E00753974**
• German	**A5E03089262**
FOUNDATION Fieldbus	
• English	**A5E02318728**
• German	**A5E02488856**
DeviceNet, Englisch	**A5E03089720**

All literature is available to download for free, in a range of languages, at
http://www.siemens.com/processinstrumentation/documentation

© Siemens 2020

Selection and ordering data (continued)

Accessories for MAG 6000 I/6000 I Ex

Description	Article No.	
Standard coil or electrode cable, 3 × 1.5 mm²/ 18 gage, single shielded with PVC jacke Temperature range: -30 ... +70 °C (-22 ... +158 °F)		
• 5 m (16.5 ft)	**A5E02296523**	
• 10 m (33 ft)	**FDK:083F0121**	
• 20 m (65 ft)	**FDK:083F0210**	
• 30 m (98 ft)	**A5E02297309**	
• 40 m (131 ft)	**FDK:083F0211**	
• 50 m (164 ft)	**A5E02297317**	
• 60 m (197 ft)	**FDK:083F0212**	
• 100 m (328 ft)	**FDK:083F0213**	
• 150 m (492 ft)	**FDK:083F3052**	
• 200 m (656 ft)	**FDK:083F3053**	
• 500 m (1640 ft)	**FDK:083F3054**	
Special electrode cable (empty pipe detection or low conductivity), 3 × 0.25 mm², double shielded with PVC jacket Temperature range: -30 ... +70 °C (-22 ... +158 °F)		
• 10 m (33 ft)	**FDK:083F3020**	
• 20 m (65 ft)	**FDK:083F3095**	
• 40 m (131 ft)	**FDK:083F3094**	
• 60 m (197 ft)	**FDK:083F3093**	
• 100 m (328 ft)	**FDK:083F3092**	
• 150 m (492 ft)	**FDK:083F3056**	
• 200 m (656 ft)	**FDK:083F3057**	
• 500 m (1640 ft)	**FDK:083F3058**	
Cable kit including standard coil cable (3 × 1.5 mm²/ 18 gage, single shielded with PVC jacket) and special electrode cable (3 × 0.25 mm², double shielded with PVC jacket) Temperature range: -30 ... +70 °C (-22 ... +158 °F)		
• 5 m (16.5 ft)	**A5E02296329**	
• 10 m (33 ft)	**A5E01181647**	
• 15 m (49 ft)	**A5E02296464**	
• 20 m (65 ft)	**A5E01181656**	
• 25 m (82 ft)	**A5E02296490**	
• 30 m (98 ft)	**A5E02296494**	
• 40 m (131 ft)	**A5E01181686**	
• 50 m (164 ft)	**A5E02296498**	
• 60 m (197 ft)	**A5E01181689**	
• 100 m (328 ft)	**A5E01181691**	
• 150 m (492 ft)	**A5E01181699**	
• 200 m (656 ft)	**A5E01181703**	
• 500 m (1640 ft)	**A5E01181705**	
Low noise electrode coax cable for low conductivity and high vibration levels, 3 × 0.13 mm² Temperature range -25 °C … +85 °C (-13 °F … +185 °F)		
• 2 m (6.6 ft)	**A5E02272692**	
• 5 m (16.5 ft)	**A5E02272723**	
• 10 m (33 ft)	**A5E02272730**	

Spare parts

Description	Article No.	
Display unit	**FDK:085U3122**	
Accessory bag including cable gland inserts and connectors for sensor cables	**FDK:085U3144**	
Display lid (Ex) in die-cast aluminum, with corrosions resitant coating (min. 60 µm)	**7ME5933-0AC01**	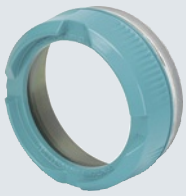
Blind lid for sensor cables connection compartment (only remote version) in die-cast aluminum, with corrosion resistant coating (min. 60 µm) incl. O-ring seal	**7ME5933-0AC02**	
Blind lid (mains supply, input/outputs) in die-cast aluminum, with corrosion resistant coating (min. 60 µm)	**7ME5933-0AC03**	
Safety clamp	**7ME5933-0AC06**	
Standard wall-mounting bracket, stainless steel AISI 316L/1.4404	**7ME5933-0AC04**	
Special wall-mounting bracket, BI 2.5 DIN 59382 X6Cr17	**7ME5933-0AC05**	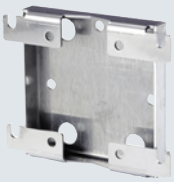

© Siemens 2020

Selection and ordering data (continued)

Complete spare part PCB unit

Description	Article No.	
MAG 6000 I std. (not for Ex), 18 ... 30 V DC; 115 ... 230 V AC Spare PCBA	**FDK:085U3123**	
MAG 6000 I std. (NAMUR), 18 ... 30 V DC; 115 ... 230 V AC Spare PCBA	**A5E31426892**	
MAG 6000 I Ex (NAMUR), 18 ... 30 V DC; 115 ... 230 V AC Spare PCBA for use with Ex sensors with increased safety e (for Ex sensors: 7ME6110, 7ME6120, 7ME6140, 7ME6310, 7ME6320, 7ME6340) (for 7ME6330 > DN300)[1]	**A5E31426877**	
MAG 6000 I Ex d 115 ... 230 V AC Spare PCBA for use with ATEX sensors with increased safety e	**A5E01013127** [1]	
MAG 6000 I Ex d 18 ... 30 V DC Spare PCBA for use with ATEX sensors with increased safety e	**A5E01013340** [1]	

[1] Spare pcba for MAG 6000 I Ex produced after 12/2012.

Please use online Product selector to get latest updates.

Product selector link:
http://www.pia-selector.automation.siemens.com

Dimensional drawings

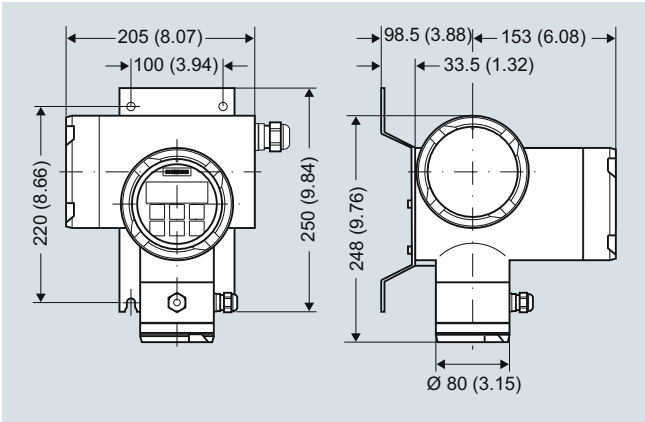

SITRANS FM transmitter MAG 6000 I with wall-mounting bracket, dimensions in mm (inch)

© Siemens 2020

MAG 1100 and MAG 1100 HT

Overview

The SITRANS FM MAG 1100 is an electromagnetic flow sensor in a compact wafer design designed for flow applications in the process industry.

Benefits

- Sensor sizes: DN 2 … 100 ($^1/_{12}$" … 4")
- Compact wafer design meets EN 1092, DIN and ANSI flange standards
- Corrosion resistant AISI 316 stainless steel sensor housing
- Highly resistant liner and electrodes fitting most extreme process media
- Temperature rating up to 200 °C (392 °F)
- Hose proof IP67/NEMA 4X enclosure rating
- Designed that patented in-situ verification can be conducted. Using SENSORPROM fingerprints.

Application

The main applications of the SITRANS FM electromagnetic flow sensors can be found in the following fields:

- Process industry
- Chemical industry
- Pharmaceutical industry
- Water treatment like e.g. chemical dosing

Design

- Compact or remote mounting possible
- Easy “plug & play” field changeability of transmitter
- Simple on site upgrade to IP68/NEMA 6P terminal box
- ATEX 2G D version
- FM Class I Div 2

Mode of operation

The flow measuring principle is based on Faraday’s law of electromagnetic induction according to which the sensor converts the flow into an electrical voltage proportional to the velocity of the flow.

Integration

The complete flowmeter consists of a flow sensor and an associated transmitter SITRANS FM MAG 5000, 6000 or 6000 I. The flexible communication concept USM II simplifies integration and update to a variety of fieldbus systems such as HART, FOUNDATION Fieldbus H1, DeviceNet, PROFIBUS DP and PA, Modbus RTU/RS 485.

© Siemens 2020

Technical specifications

Version	MAG 1100	MAG 1100 HT (High temperature)
Measuring principle	Electromagnetic induction	Electromagnetic induction
Excitation frequency (Mains supply: 50 Hz/60 Hz)	DN 2 … 65 (1/12“ … 2½"): 12.5 Hz/15 Hz DN 80, 100 (3", 4"): 6.25 Hz/7.5 Hz	DN 15 … 50 (½" … 2"): 12.5 Hz/15 Hz DN 80, 100 (3", 4"): 6.25 Hz/7.5 Hz
Process connection		
Nominal size		
• MAG 1100 (Ceramic)	DN 2 … DN 100 (1/12" … 4")	DN 15 … DN 100 (½" … 4")
• MAG 1100 (PFA)	DN 10 … DN 100 (3/8" … 4")	
Mating flanges	EN 1092-1 (DIN 2501), ANSI B 16.5 class 150 and 300 or equivalent Option: DN 2 … 10 (1/12" … 3/8"): G½"/NPT ½" pipe connection adapters	EN 1092-1 (DIN 2501), ANSI B 16.5 class 150 and 300 or equivalent
Rated operating conditions		
Ambient conditions		
Ambient temperature		
• Standard sensor	-40 … +100 °C (-40 … +212 °F)	-40 … +100 °C (-40 … +212 °F)
• Ex sensor	-20 … +60 °C (-4 … +140 °F)	-20 … +60 °C (-4 … +140 °F)
• Compact with transmitter MAG 5000/6000	-20 … +60 °C (-4 … +140 °F)	
• Compact with transmitter MAG 6000 I	-20 … +60 °C (-4 … +140 °F)	
• Compact with transmitter MAG 6000 I Ex	-20 … +60 °C (-4 … 140 °F)	
Temperature of medium		
• MAG 1100 (Ceramic)	-20 … +150 °C (-4 … +302 °F)	-20 … +200 °C (-4 … +392 °F)
• MAG 1100 Ex (Ceramic)	-20 … +150 °C (-4 … +302 °F)	-20 … +180 °C (-4 … +356 °F)
• MAG 1100 (PFA)	-30 … +130 °C (-22 … +266 °F) Suitable for steam sterilization at 150 °C (302 °F)	
Temperature shock		
• MAG 1100 (Ceramic)		
- Duration ≤ 1 min, followed by 10 min rest	• DN 2, 3 (1/12", 1/8") No limitations	• DN 15, 25: Max. ΔT ≤ 80 °C/min (½", 1": Max. ΔT ≤ 144 °F/min)
	• DN 6, 10, 15, 25: Max. ΔT ≤ 80 °C/min (¼", 3/8", ½", 1": Max. ΔT ≤ 144 °F/min)	• DN 40, 50: Max. ΔT ≤ 70 °C/min (1½", 2": Max. ΔT ≤ 126 °F/min)
	• DN 40, 50, 65: Max. ΔT ≤ 70 °C/min (1½", 2", 2½": Max. ΔT ≤ 126 °F/min)	• DN 80, 100: Max. ΔT ≤ 60 °C/min (3", 4": Max. ΔT ≤ 108 °F/min)
	• DN 80, 100: Max. ΔT ≤ 60 °C/min (3", 4": Max. ΔT ≤ 108 °F/min)	
• MAG 1100 (PFA)	Max. ± 100 °C (212 °F) momentarily	
Operating pressure		
• MAG 1100 (Ceramic)	• DN 2 … 65: 40 bar (1/12" … 2½": 580 psi)	• DN 15 … 50: 40 bar (½" … 2": 580 psi)
	• DN 80: 37.5 bar (3": 540 psi)	• DN 80: 37.5 bar (3": 540 psi)
	• DN 100: 30 bar (4": 435 psi)	• DN 100: 30 bar (4": 435 psi)
	Vacuum: 1 x 10^{-6} bar_{abs} (1.5 x 10^{-5} psi_{abs})	Vacuum: 1 x 10^{-6} bar_{abs} (1.5 x 10^{-5} psi_{abs})
• MAG 1100 (PFA)	20 bar (290 psi) Vacuum: 0.02 bar_{abs} (0.3 psi_{abs}) DN 80 … DN 100: CO_2 pressure max. 7 bar (101.5 psi)	
Mechanical load (vibration)	• 18 … 1000 Hz random in x, y, z, directions for 2 hours according to EN 60068-2-36	• 18 … 1000 Hz random in x, y, z, directions for 2 hours according to EN 60068-2-36
	• Sensor: 3.17 g RMS	• Sensor: 3.17 g RMS
	• Sensor with compact MAG 5000/6000 mounted transmitter: 3.17 g RMS	
	• Sensor with compact MAG 6000 I/6000 I Ex mounted transmitter: 1.14 g RMS	
	• For compact installation with the MAG 6000 I, transmitter to be supported to avoid tension on sensor part.	
Enclosure rating (standard)	IP67 to EN 60529 (NEMA 4X), 1 mH_2O for 30 min	IP67 to EN 60529 (NEMA 4X), 1 mH_2O for 30 min
EMC	2014/30/EU	2014/30/EU

© Siemens 2020

Technical specifications (continued)

Version	MAG 1100	MAG 1100 HT (High temperature)
Design		
Weight	See Dimensional drawings	See Dimensional drawings
Material		
• Enclosure		
- MAG 1100	Stainless steel AISI 316L/1.4404	Stainless steel AISI 316L/1.4404
• Terminal box		
- Standard	Fibre glass reinforced polyamide (not for Ex)	Stainless steel AISI 316/1.4436
- Option	Stainless steel AISI 316/1.4436	
• Fixing studs	Stainless steel AISI 304/1.4301, Number and size to EN 1092-1:2001	Stainless steel AISI 304/1.4301, Number and size to EN 1092-1:2001
• Gaskets		
- Standard	EPDM (max. 150 °C, PN 40 (max. 302 °F, 600 psi))	Graphite (max. 200 °C, PN 40 (max. 392 °F, 600 psi))
- Option	• Graphite (max. 200 °C, PN 40 (max. 392 °F, 600 psi)) • PTFE (max. 130 °C, PN 25 (max. 266 °F, 300 psi))	
• Pipe connection adapters: DN 2, 3, 6 and 10 (1/12", 1/8", ¼" and 3/8")	• Stainless steel, AISI 316 /1.4436 • Hastelloy C22/2.4602 • PVDF	
Liner		
• MAG 1100 (Ceramic)	• DN 2, 3 (1/12", 1/8"): Zirconium oxide (ZrO_2) (ceramic) • DN 6 … 100 (¼" … 4"): Aluminum oxide Al_2O_3	DN 15 … 100 (½", 4"): Aluminum oxide Al_2O_3
• MAG 1100 (PFA)	Reinforced PFA (not for Ex)	
Electrodes		
• MAG 1100 (Ceramic)	• DN 10 … 100 (3/8" … 4"): Platinum with gold/Titanium brazing alloy • DN 2 … 6 (1/12" … ¼"): Platinum	Platinum with gold/Titanium brazing alloy
• MAG 1100 (PFA)	• DN 10 … 15 (3/8" … ½"): Hastelloy C276/2.4819 • DN 25 … 100 (1" … 4"): Hastelloy C22/2.4602	
Cable entries	• Remote installation 2 x M20 or 2 x ½" NPT • Compact installation - MAG 5000/MAG 6000: 4 x M20 or 4 x ½" NPT - MAG 6000 I: 2 x M25 (for supply/output) - MAG 6000 I Ex: 2 x M25 (for supply/output)	Remote installation 2 x M20 or 2 x ½" NPT
Certificates and approvals		
Calibration		
• Default calibration	Zero-point, 2 x 25 %, 2 x 90 %	Zero-point, 2 x 25 %, 2 x 90 %
• Special calibration	5-point calibration: 20 %, 40 %, 60 %, 80 %, 100 % of factory Q_{max} 10-point calibration: ascending and descending at 20 %, 40 %, 60 %, 80 %, 100 % of factory Q_{max} Matched-pair calibration: default, 5-point or 10-point	
Hazardous areas		
• MAG 1100 F (Ceramic)		
- Ex-sensor in compact or remote version with MAG 6000 I Ex	• ATEX, EAC Ex - Zone 1 Ex d e ia IIB T6 Gb • ATEX - Zone 21 Ex tD A21 IP67	• ATEX, EAC Ex - Zone 1 Ex d e ia IIB T6 Gb • ATEX - Zone 21 Ex tD A21 IP67
- Standard sensor in compact or remote version with MAG 5000/6000/6000 I	• FM - NI Class I Div. 2 Groups A, B, C, D	• FM - NI Class I Div. 2 Groups A, B, C, D
• MAG 1100 F (PFA)		
- Standard sensor in compact or remote version with MAG 5000/6000/6000 I	• FM - NI Class I Div. 2 Groups A, B, C, D	
Pressure equipment	• PED – 2014/68/EU • CRN (only PFA)	• PED – 2014/68/EU
Others	• EAC (Russia, Belarus, Kazakhstan)	• EAC (Russia, Belarus, Kazakhstan)

For technical specification for transmitter - please see section about transmitters.

© Siemens 2020

Selection and ordering data

	Article No.
Sensor SITRANS FM MAG 1100 ↗	**7ME6110-**
EPDM gaskets included	■ ■ A ■ 0 - ■ ■ ■ ■
↗ Click on the Article No. for the online configuration in the PIA Life Cycle Portal.	
Diameter	
DN 2 (1/12“)	1 D
DN 3 (1/8“)	1 H
DN 6 (¼“)	1 M
DN 10 (3/8“)	1 R
DN 15 (½“)	1 V
DN 25 (1“)	2 D
DN 40 (1½“)	2 R
DN 50 (2“)	2 Y
DN 65 (2½“)	3 F
DN 80 (3“)	3 M
DN 100 (4“)	3 T
Liner material	
PFA - DN 10 ... 100 (3/8“ ... 4“)	1
Ceramic	2
Electrode material	
Hastelloy C (only with PFA liner)	1
Platinum (only with ceramic liner)	2
Transmitter	
Standard sensor for remote transmitter (order transmitter separately)	A
Ex sensor for remote transmitter (order transmitter separately)	B
MAG 6000 I, Aluminum 18 ... 90 V DC, 115 ... 230 V AC	C
MAG 6000 I, Aluminum 18 ... 30 V DC, Ex	D
MAG 6000 I, Aluminum 115 ... 230 V AC, Ex	E
MAG 6000 Polyamide, 11 ... 30 V DC/11 … 24 V AC	H
MAG 6000, Polyamide, 115 ... 230 V AC	J
MAG 5000, Polyamide, 11 ... 30 V DC/11 ... 24 V AC	K
MAG 5000, Polyamide, 115 ... 230 V AC	L
Communication	
No communication, add-on possible	A
HART	B
PROFIBUS PA Profile 3 (only MAG 6000/MAG 6000 I)	F
PROFIBUS DP Profile 3 (not for Ex) (only MAG 6000/MAG 6000 I)	G
Modbus RTU/RS 485 (not for Ex) (only MAG 6000/MAG 6000 I)	E
FOUNDATION Fieldbus H1 (only MAG 6000/MAG 6000 I)	J
Cable glands/terminal box	
Metric: Polyamide terminal box or MAG 6000 I compact	1
½" NPT: Polyamide terminal box or MAG 6000 I compact	2
Metric: Stainless steel terminal box	3
½" NPT: Stainless steel terminal box	4

[1] Quick ship only in combination with Ceramic liner

	Order code
Additional information	
Please add “**-Z**“ to Article No. and specify Order code(s) and plain text.	
Certificates	
• Material certificate according to EN 10204-3.1	**C12**
• Factory certificate according to EN 10204-2.2	**C14**
• Factory certificate according to EN 10204-2.1	**C15**
Special calibration	
• 5-point calibration[1]	**D01**
• 10-point calibration[2]	**D06**
• Default (2 × 25 % and 2 × 90 %) matched-pair calibration	**D11**
• 5-point, matched-pair calibration[1]	**D15**
• 10-point, matched-pair calibration[2]	**D18**
Terminal blocks	
• Factory mounted terminal blocks	**N02**
Country specific label	
• CRN (Canadian Registration Number)	**H25**
Tag name plate, stainless steel (specify in plain text)	**Y17**
Tag name plate, plastic (self adhesive)	**Y18**
Customer-specific transmitter setting	**Y20**
Factory mounted sensor cables	
• Sensor cables wired (specify Article No. for sensor cables and order cables separately)	**Y40**
• Sensor cables wired and IP68 sealing (specify Article No. for sensor cables and order cables separately)	**Y41**
Additional calibrations	
• Accredited matched-pair calibration acc. to ISO/IEC 17025: 2005	**On request**[3]
• Customer-specified calibration up to 10 points	**On request**[3]
• Customer-witnessed calibration Any of above calibration	**On request**[3]

[1] 20 %, 40 %, 60 %, 80 %, 100 % of factory Q_{max}

[2] Ascending and descending at 20 %, 40 %, 60 %, 80 %, 100 % of factory Q_{max}

[3] Product Variation Request (PVR)

© Siemens 2020

Selection and ordering data

	Article No.
Sensor SITRANS FM MAG 1100 HT ↗ **High Temperature**	**7ME6120-**
Ceramic liner, Platinum electrode, Graphite gaskets included	■ ■ A 2 0 - 2 ■ A ■
↗ Click on the Article No. for the online configuration in the PIA Life Cycle Portal.	
Diameter	
DN 15 (½")	1 V
DN 25 (1")	2 D
DN 40 (1½")	2 R
DN 50 (2")	2 Y
DN 80 (3")	3 M
DN 100 (4")	3 T
Transmitter	
Standard sensor for remote transmitter (order transmitter separately)	A
Ex sensor for remote transmitter (order transmitter separately)	B
Cable glands/terminal box	
Metric: Stainless steel terminal box	3
½" NPT: Stainless steel terminal box	4

Additional information	Order code
Please add "**-Z**" to Article No. and specify Order code(s) and plain text.	
Certificates	
• Material certificate according to EN 10204-3.1	**C12**
• Factory certificate according to EN 10204-2.2	**C14**
• Factory certificate according to EN 10204-2.1	**C15**
Special calibration	
• 5-point calibration[1)]	**D01**
• 10-point calibration[2)]	**D06**
• Default (2 × 25 % and 2 × 90 %) matched-pair calibration	**D11**
• 5-point, matched-pair calibration[1)]	**D15**
• 10-point, matched-pair calibration[2)]	**D18**
Terminal blocks	
• Factory mounted terminal blocks	**N02**
Tag name plate, stainless steel (specify in plain text)	**Y17**
Tag name plate, plastic (self adhesive)	**Y18**
Customer-specific transmitter setting	**Y20**
Factory mounted sensor cables	
• Sensor cables wired (specify Article No. for sensor cables and order cables separately)	**Y40**
• Sensor cables wired and IP68 sealing (specify Article No. for sensor cables and order cables separately)	**Y41**
Additional calibrations	
• Accredited matched-pair calibration acc. to ISO/IEC 17025: 2005	**On request**[3)]
• Customer-specified calibration up to 10 points	**On request**[3)]
• Customer-witnessed calibration Any of above calibration	**On request**[3)]

1) 20 %, 40 %, 60 %, 80 %, 100 % of factory Q_{max}
2) Ascending and descending at 20 %, 40 %, 60 %, 80 %, 100 % of factory Q_{max}
3) Product Variation Request (PVR)

Operating instructions for SITRANS FM MAG 1100

Description	Article No.
• English	**A5E02435647**

All literature is available to download for free, in a range of languages, at
https://www.siemens.com/processinstrumentation/documentation

Accessories

Description	Article No.	
Potting kit for IP68/ NEMA 6P sealing of sensor junction box	**FDK:085U0220**	

© Siemens 2020

Selection and ordering data

Accessories for MAG 1100 sensor

	Article No.
Pipe connection ½" external thread	
For DN 2 ... 10 (1/12" ... 3/8") sensor, material: Stainless steel AISI 316L 2 pcs. pipe connections, 2 pcs. EPDM gaskets, 12 pcs. M4x12 screws	
• R½" ISO 7-1 tappered thread	**FDK:083G0080**
• ½" NPT thread	**FDK:083G4330**
For DN 2 … 10 (1/12" … 3/8") sensor, material: Hastelloy C, 2 pcs. pipe connections, 2 pcs. PTFE gaskets, 12 pcs. M4x12 screws	
• R½" ISO 7-1 tapered thread	**FDK:083G4332**
• ½" NPT thread	**FDK:083G4331**
For DN 2 … 10 (1/12" … 3/8") sensor, material PVDF (Kynar 1000) 2 pcs. pipe connections (max. 70 °C, PN 8 bar/max 158 °F, 116 PSI), 1 pc. grounding ring 1), 1 pc. grounding wire, 3 pcs. PTFE gaskets, 2 pcs. space rings, 6 pcs. M4x12 and 6 pcs. M4x20 screws	
• R½" ISO 7-1 tapered thread incl. grounding ring	**A5E01018395**
• ½" NPT thread incl. grounding ring	**A5E01018400**
EPDM gaskets	
Material: EPDM; each set includes: 2 pcs. EPDM gaskets, 1 pc. grounding wire, 1 pc. M6 screw, 1 pc. nut, 1 pc. washer, 1 pc. bolt grounding plate	
• DN 2 … 10 (1/12" … 3/8")	**FDK:083G3116**
• DN 15 (½"")	**FDK:083G3117**
• DN 25 (1")	**FDK:083G3119**
• DN 40 (1½")	**FDK:083G3121**
• DN 50 (2")	**FDK:083G3122**
• DN 65 (2½")	**FDK:083G3123**
• DN 80 (3")	**FDK:083G3124**
• DN 100 (4")	**FDK:083G3125**
PTFE gaskets	
Material: PTFE; each set includes: 2 pcs. gaskets, 2 pcs. grounding wires, 3 pcs. M6 screws (DN 2 … DN 10: 12 pcs. M4x14)	
• DN 2 … 10 (1/12" … 3/8")	**FDK:083G0156**
• DN 15 (½")	**FDK:083G0157**
• DN 25 (1")	**FDK:083G0159**
• DN 40 (1½")	**FDK:083G0161**
• DN 50 (2")	**FDK:083G0162**
• DN 65 (2½")	**FDK:083G0163**
• DN 80 (3")	**FDK:083G0164**
• DN 100 (4")	**FDK:083G0165**
Graphite gaskets	
Material: Graphite; conductive, each set includes: 2 pcs. gaskets (can also be used as grounding ring)	
• DN 2 … 10 (1/12" … 3/8")	**FDK:083G0116**
• DN 15 (½")	**FDK:083G0117**
• DN 25 (1")	**FDK:083G0119**
• DN 40 (1½")	**FDK:083G0121**
• DN 50 (2")	**FDK:083G0122**
• DN 65 (2½")	**FDK:083G0123**
• DN 80 (3")	**FDK:083G0124**
• DN 100 (4")	**FDK:083G0125**

	Article No.
Grounding ring (stainless steel)	
Material: AISI 316/1.4436; each set includes: 1 pc. grounding ring[1)], 3 pcs. PTFE gaskets, 1 pc. earth wire, 1 pc. M6 screw	
• DN 2 … 10 (1/12" … 3/8")	**FDK:083G0686**
• DN 15 (½")	**FDK:083G0687**
• DN 25 (1")	**FDK:083G0689**
• DN 40 (1½")	**FDK:083G0691**
• DN 50 (2")	**FDK:083G0692**
• DN 65 (2½")	**FDK:083G0693**
• DN 80 (3")	**FDK:083G0694**
• DN 100 (4")	**FDK:083G0695**
Grounding ring (Hastelloy C)	
Material: Hastelloy C22/2.4602; each set includes: 1 pc. grounding ring[1)], 3 pcs. PTFE gaskets, 1 pc. earth wire, 1 pc. M6 screw	
• DN 2 … 10 (1/12" … 3/8")	**FDK:083G3256**
• DN 15 (½")	**FDK:083G3257**
• DN 25 (1")	**FDK:083G3259**
• DN 40 (1½")	**FDK:083G3261**
• DN 50 (2")	**FDK:083G3262**
• DN 65 (2½")	**FDK:083G3263**
• DN 80 (3")	**FDK:083G3264**
• DN 100 (4")	**FDK:083G3265**
Grounding ring (Tantalum)	
Material: Tantalum; each set includes: 1 pc. grounding ring[1)], 3 pcs. PTFE gaskets, 1 pc. earth wire, 1 pc. M6 screw	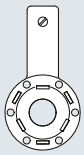
• DN 2 … 10 (1/12" … 3/8")	**A5E01181599**
• DN 15 (½")	**A5E01181606**
• DN 25 (1")	**A5E01181610**
• DN 40 (1½")	**A5E01181613**
• DN 50 (2")	**A5E01181615**
• DN 65 (2½")	**A5E01181616**
• DN 80 (3")	**A5E01181619**
• DN 100 (4")	**A5E01181622**
Studs and nuts	
for DN 100 PN 25/40, 8 pcs. M20 studs, 16 pcs. M20 nuts Material: AISI 304/1.4305	
• DN 100 (4")	**FDK:083G0226**
Mounting kit	
Material: Stainless steel 300 series, each kit includes: 1 pc. clamp block, 1 pc. clamp, 1 pc. bracket, 4 pcs. M8x20 screw, 2 pcs. M8 nut, 6 pcs. M8 split lockwasher, 2 pcs. M6 U-bolts	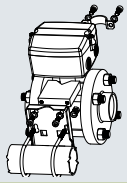
• DN 2 … 100 (1/12" … 4")	**A5E38288519**

[1)] Thickness of grounding ring is 2 mm (0.08 inch), material Hastelloy C22/2.4602.

© Siemens 2020

3

Dimensional drawings

Sensor MAG 1100, compact/remote

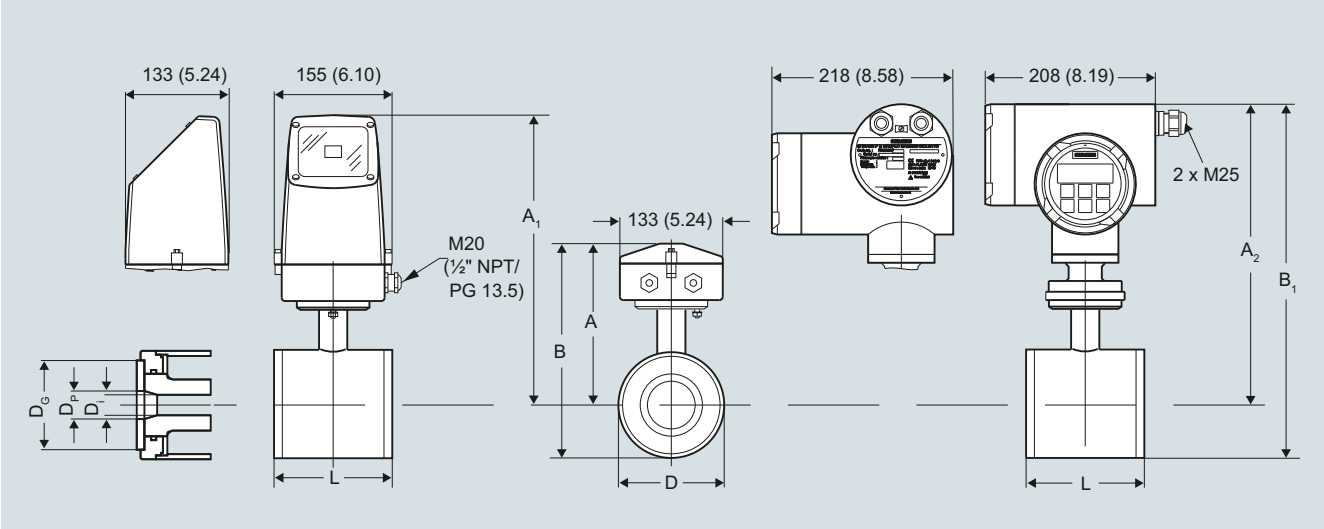

Dimensions in mm (inch)

Important note: For compact installation with MAG 6000 I/Ex - transmitter to be supported to avoid tension on the sensor part

Size DN	A[1] [mm]	B[1] [mm]	A_1/A_2 [3] [mm]	B_1 [mm]	D [mm]	D_i [mm]	D_i (PFA) [mm]	D_P [mm]	D_G [mm]	Weight[2] [kg]
2	161	186	315	340	48.7	2		17.3	34	2.2
3	161	186	315	340	48.7	3		17.3	34	2.2
6	161	186	315	340	48.7	6		17.3	34	2.2
10	161	186	315	340	48.7	10	10	13.6	34	2.2
15	161	186	315	340	48.7	15	16	17.3	40	2.2
25	169	201	323	354	63.5	25	26	28.5	56	2.7
40	179	221	333	375	84.0	40	38	43.4	75	3.4
50	188	239	342	393	101.6	50	50	54.5	90	4.2
65	198	258	351	412	120.9	65	66	68.0	112	5.5
80	204	270	357	424	133.0	80	81	82.5	124	7.0
100	217	296	370	450	159.0	100	100	107.1	150	10.0

Size [inch]	A[1] [inch]	B[1] [inch]	A_1/A_2 [3] [inch]	B_1 [inch]	D [inch]	D_i [inch]	D_i (PFA) [inch]	D_P [inch]	D_G [inch]	Weight[2] [lbs]
1/12	6.34	7.33	12.40	13.39	1.92	0.08		0.68	1.34	4.8
1/8	6.34	7.33	12.40	13.39	1.92	0.12		0.68	1.34	4.8
¼	6.34	7.33	12.40	13.39	1.92	0.24		0.68	1.34	4.8
3/8	6.34	7.33	12.40	13.39	1.92	0.39	0.39	0.53	1.34	4.8
½	6.34	7.33	12.40	13.39	1.92	0.59	0.63	0.68	1.57	4.8
1	6.66	7.92	12.72	13.94	2.50	0.98	1.02	1.12	2.20	5.9
1½	7.05	8.70	13.11	14.76	3.31	1.57	1.50	1.71	2.95	7.5
2	7.40	9.41	13.47	15.47	4.00	1.97	1.97	2.15	3.54	9.2
2½	7.80	10.16	13.82	16.22	4.76	2.56	2.60	2.68	4.41	12
3	8.03	10.63	14.06	16.70	5.24	3.15	3.19	3.25	4.88	15
4	8.54	11.65	14.57	17.72	6.26	3.94	3.94	4.22	5.91	22

1) 14.5 mm (0.571") shorter when the stainless steel terminal box is used (Ex or high temperature 200 °C (392 °F) version).

2) With transmitter MAG 5000 or MAG 6000 installed, weight is increased by approximately 0.8 kg (1.8 lb).
With MAG 6000 I weight is increased with 5.5 kg (12.1 lbs).

3) A_2 is 3 mm (0.12") shorter than A_1

© Siemens 2020

Dimensional drawings (continued)

The total built-in length “L” [mm]/[inch] before assembling depends on the gasket selected.

Size		EPDM		Graphite		PTFE (Teflon)		Without gasket		Grounding ring	
DN	Inch	[mm]	[inch]	[mm]	[inch]	[mm]	[inch]	[mm]	[inch]	[mm]	[inch]
2 … 10 [1]	$^1/_{12}$ … $^3/_8$	64	2.52	66	2.60	70	2.75	64	2.52	77	3.03
15	½	65	2.56	66	2.60	70	2.75	64	2.52	77	3.03
25	1	80	3.15	81	3.19	85	3.35	79	3.10	92	3.62
40	1½	95	3.74	96	3.78	100	3.94	94	3.70	107	4.21
50	2	105	4.13	106	4.17	110	4.33	104	4.05	117	4.61
65	2½	130	5.12	131	5.15	135	5.31	129	5.05	142	5.60
80	3	155	6.10	156	6.14	160	6.30	154	6.00	167	6.57
100	4	185	7.28	186	7.31	190	7.48	184	7.20	197	7.76

[1] Mounting between two flanges

Sensor MAG 1100 DN 2 … 10 ($^1/_{12}$" … $^3/_8$") with adapters

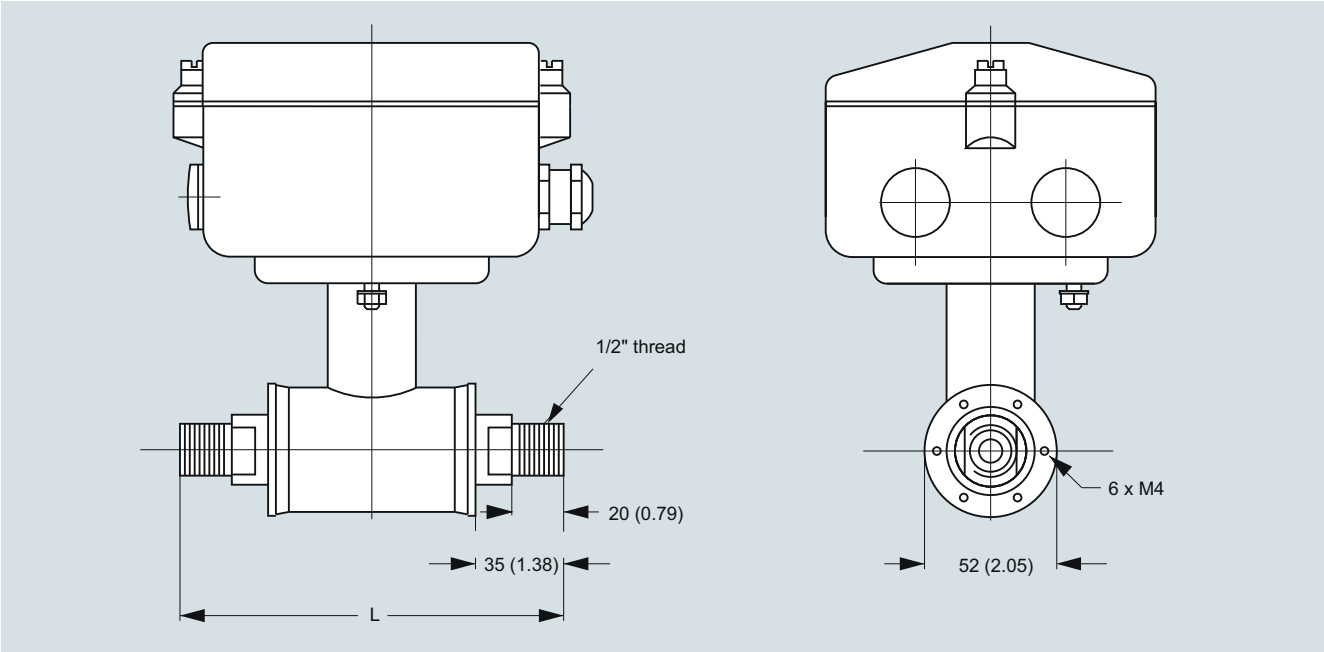

The MAG 1100 DN 2, 3, 6 and 10 ($^1/_{12}$", $^1/_8$", ¼" and $^3/_8$") are prepared for assembly with the ½" pipe connections. Dimensions in mm (inch)

The length “L“ varies dependent on the gasket choice.

Stainless steel and Hastelloy pipe connections								PVDF pipe connections	
Without gasket		EPDM		Graphite		PTFE		PTFE	
[mm]	[inch]	[mm]	[inch]	[mm]	[inch]	[mm]	[inch]	[mm]	[inch]
150	5.9	150	5.9	152	6.0	156	6.1	133	5.2

Important note:
For compact installation with the MAG 6000 I, transmitter to be supported to avoid tension on sensor part.

© Siemens 2020

Overview

The electromagnetic sensor SITRANS FM MAG 1100 F is designed to meet applications in the food and beverage industry.

Benefits

- Sensor sizes: DN 10 to DN 100 (3/8" to 4")
- AISI 316 stainless steel enclosure
- Sensor: Hygienic connection, 3A approval and EHEDG certified
- Sanitary design for CIP/SIP cleaning
- Easy commissioning, the SENSORPROM unit automatically updates settings
- Hose proof IP67/NEMA 4X enclosure rating
- Designed that patented in-situ verification can be conducted. Using SENSORPROM fingerprints.

Application

The main applications of the SITRANS FM electromagnetic sensors can be found in the following fields:

- Food industry
- Beverage industry
- Pharmaceutical industry

Design

- Unique mechanical design with a wide range of customer specified sanitary connection
- Compact or remote mounting possible easy “plug & play” field changeable
- Simple on site upgrade to IP68/NEMA 6P terminal box
- ATEX 2G D version for hazardous areas (ceramic liner)

Mode of operation

The flow measuring principle is based on Faraday’s law of electromagnetic induction according to which the sensor converts the flow into an electrical voltage proportional to the velocity of the flow.

Integration

The complete flowmeter consists of a sensor and an associated transmitter SITRANS FM MAG 5000, 6000 and 6000 I. The flexible communication concept USM II simplifies integration and update to a variety of fieldbus systems such as PROFIBUS DP and PA, Modbus RTU/RS 485, HART,
FOUNDATION Fieldbus H1, DeviceNet.

Pressure/temperature curve; material AISI 316L/1.4404

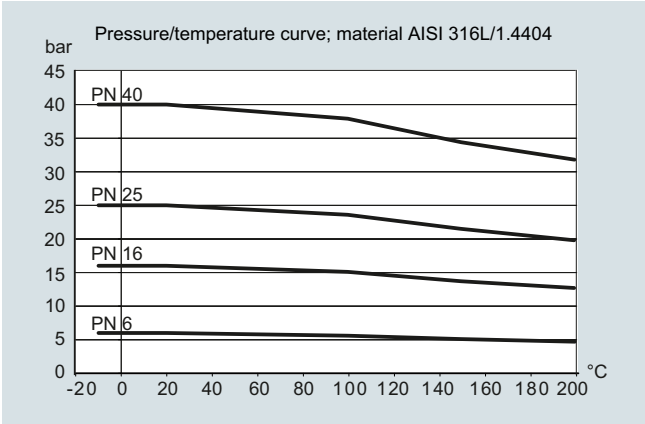

Pressure/temperature curve; material AISI 316L/1.4404

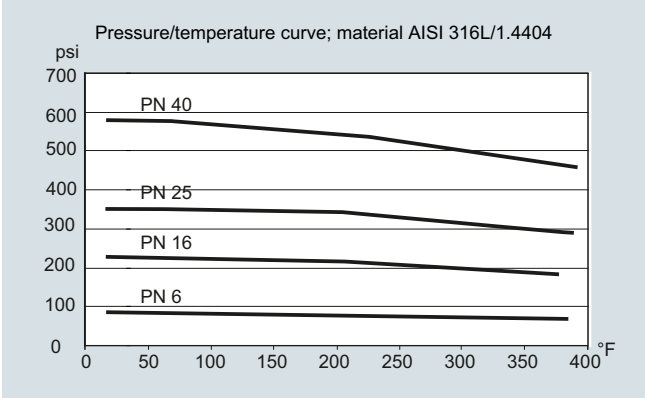

© Siemens 2020

Technical specifications

Measuring principle	Electromagnetic induction
Excitation frequency (Mains supply: 50 Hz/60 Hz)	DN 10 … 65 (¼" … 2½"): 12.5 Hz/15 Hz DN 80 … 100 (3", 4"): 6.25 Hz/7.5 Hz
Process connection	
Nominal size	DN 10 … DN 100 (3/8" … 4")
Process connection	Hygienic adapters available for: • Direct welding onto pipe • Clamp fitting • Threaded fitting
Rated operating conditions	
Ambient conditions	
Ambient temperature	
• Sensor	-40 … +100 °C (-40 … +212 °F)
• Ex sensor	-20 … +60 °C (-4 … +140 °F)
• Compact with transmitter MAG 5000/6000	-20 … +60 °C (-4 … +140 °F)
• Compact with transmitter MAG 6000 I	-20 … +60 °C (-4 … +140 °F)
• Compact with transmitter MAG 6000 I Ex	-10 … +60 °C (14 … 140 °F)
Temperature of medium	
MAG 1100 F (Ceramic)	-20 … +150 °C (-4 … +302 °F) Suitable for steam sterilization
MAG 1100 F (PFA)	-30 … +130 °C (-22 … +266 °F) Suitable for steam steralization at 150 °C (302 °F)
Temperature shock	
MAG 1100 F	
• Duration ≤ 1 min, followed by 10 min rest	• DN 10, 15, 25: Max. ΔT ≤ 80 °C/min (3/8", ½", 1": Max. ΔT ≤ 144 °F/min) • DN 40, 50, 65: Max. ΔT ≤ 70 °C/min (1½", 2", 2½": Max. ΔT ≤ 126 °F/min) • DN 80, 100: Max. ΔT ≤ 60 °C/min (3", 4": Max. ΔT ≤ 108 °F/min)
MAG 1100 F (PFA)	Max. ± 100 °C (212 °F) momentarily
Operating pressure	
MAG 1100 F (Ceramic)	DN 10 … 65: 40 bar (3/8" … 2½": 580 psi) DN 80: 25 bar (3": 363 psi) DN 100: 25 bar (4": 363 psi) Vacuum: 1 x 10^{-6} bar_{abs} (1.5 x 10^{-5} psi_{abs})
MAG 1100 F (PFA)	20 bar (290 psi) Vacuum: 0.02 bar_{abs} (0.3 psi_{abs}) DN 80 … DN 100: CO_2 pressure max. 7 bar (101.5 psi)
Mechanical load (vibration)	18 … 1 000 Hz random in x, y, z, directions for 2 hours according to EN 60068-2-36 Sensor: 3.17 g RMS Sensor with compact MAG 5000/6000 mounted transmitter: 3.17 grms Sensor with compact MAG 6000 I/MAG 6000 I Ex mounted transmitter: 1.14 grms For compact installation with the MAG 6000 I/MAG 6000 I Ex, transmitter to be supported to avoid tension on sensor part.
Enclosure rating	IP67 to EN 60529 (NEMA 4X), 1 mH_2O for 30 min
EMC	2014/30/EU

Design	
Weight	See Dimensional drawings
Material	
Enclosure	
• MAG 1100 F	Stainless steel AISI 316L/1.4404
Terminal box (remote version only)	
• Standard	Fibre glass reinforced polyamide
• Option	Stainless steel AISI 316/1.4436
• Ex ATEX (remote version only)	Stainless steel AISI 316/1.4436
Liner	
MAG 1100 F (Ceramic)	Aluminum oxide Al_2O_3 (ceramics)
MAG 1100 F (PFA)	Reinforced PFA (teflon) (not for Ex)
Electrodes	
MAG 1100 F (Ceramic)	Platinum with gold/Titanium brazing alloy
MAG 1100 F (PFA)	• DN 10 … 15 (3/8" … ½"): Hastelloy C276/2.4819 • DN 25 … 100 (1" … 4"): Hastelloy C22/2.4602
Cable entries	• Remote installation 2 x M20 or 2 x ½" NPT • Compact installation - MAG 5000/MAG 6000: 4 x M20 or 4 x ½" NPT - MAG 6000 I: 2 x M25 (for supply/output) - MAG 6000I Ex: 2 x M25 (for supply/output)
Certificates and approvals	
Calibration	
• Default calibration	Zero-point, 2 x 25 %, 2 x 90 %
Hazardous areas	
• MAG 1100 F (Ceramic)	
- Ex-sensor in compact or remote version with MAG 6000 I Ex	• ATEX, EAC Ex - Zone 1 Ex d e ia IIB T6 Gb • ATEX - Zone 21 Ex tD A21 IP67
- Standard sensor in compact or remote version with MAG MAG 5000/6000/6000 I Ex	• FM - NI Class I Div. 2 Groups A, B, C, D
• MAG 1100 F (PFA)	
- Standard sensor in compact or remote version with MAG MAG 5000/6000/6000 I Ex	• FM - NI Class I Div. 2 Groups A, B, C, D
Hygienic	
• MAG 1100 F (Ceramic)	• 3A (remote version with Polyamide terminal box)
• MAG 1100 F (PFA)	• 3A (remote version with Polyamide terminal box) • EHEDG (remote version with Polyamide terminal box, DN 25 ... 100 /1 ... 4") • Hygienic EC 1935:2004 European food contact material
Pressure equipment	PED - 2014/68/EU
Others	• EAC (Russia, Belarus, Kazakhstan) • KCC (South Korea)

© Siemens 2020

Technical specifications (continued)

Accessories

Weld-in adapter	
Adapter for welding onto dairy pipe, stainless steel 1.4404	Tri-Weld ISO 2037, DIN 11850, SMS 3008, BS 4825-1
• DN 10, 15, 25, 40, 50 and 65 (3/8", ½", 1", 1½", 2" and 2½")	PN 40 (600 psi)
• DN 8 and DN 100 (3" and 4")	PN 25 (350 psi)
Clamp adapter	Tri-Clamp, ISO 2852, DIN 32676, SMS 3016, BS 4825-3
DN 10, 15, 25, 40 and 50 (3/8", ½", 1", 1½" and 2")	PN 16 (200 psi)
DN 65, 80 and 100 (2½", 3" and 4")	PN 10 (150 psi)
Thread adapter	
DIN 11851	
• DN 10, 15, 25, and 40 (3/8", ½", 1", and 1½")	PN 40 (600 psi)
• DN 50, 65, 80 and 100 (2", 2½", 3" and 4")	PN 25 (350 psi)
ISO 2853, BS 4825-4	
• DN 10, 15, 25, 40, 50, 65 and 80 (3/8", ½", 1", 1½", 2", 2½" and 3")	PN 16 (200 psi)
SMS 1145	
• DN 25, 40, 50, 65 and 80 (1", 1½", 2", 2½" and 3")	PN 6 (80 psi)
Design	
Material	
Adapter	Stainless steel AISI 316/1.4436
Gasket	
• MAG 1100 F (Ceramic)	FKM/FPM with stainless steel insert (AISI 304/1.4301) (-20 … +150 °C (-4 … +302 °F))
	EPDM (-20 … +150 °C (-4 … +302 °F))
• MAG 1100 F (PFA)	EPDM (-20 … +150 °C (-4 … +302 °F))
	NBR (-20 … +100 °C (-4 … +212 °F))

Note:

When combined sensor and adapter, the operating pressure is the lower rated of the pair.

Selection and ordering data

	Article No.
Sensor SITRANS FM MAG 1100 F ↗	**7ME6140-** ■■■■■-■■■■
↗ Click on the Article No. for the online configuration in the PIA Life Cycle Portal.	
Diameter	
DN 10 (3/8")	1 R
DN 15 (½")	1 V
DN 25 (1")	2 D
DN 40 (1½")	2 R
DN 50 (2")	2 Y
DN 65 (2½")	3 F
DN 80 (3")	3 M
DN 100 (4")	3 T
Process connections	
None (not suitable for 3A approval)	A
Weld in	
DIN 11850	B
ISO 2037 (SMS 3008)	C
Tri-Weld/BS 4825-1	D
Clamp type	
DIN 32676	G
ISO 2852 (SMS 3016)	H
Tri-Clamp/BS 4825-3	J
Threaded type	
DIN 11851	M
SMS 1145[1)]	N
Liner material	
PFA	1
Ceramic	2
Gasket material[1)]	
EPDM flat gasket (3A)	0
FPM/FKM (3A) (only with ceramic liner)	2
EPDM-P gasket (only for PFA) (EHEDG, 3A)	3
Electrode material	
Hastelloy C (only with PFA liner)	1
Platinum (only with ceramic liner)	2
Transmitter	
Standard sensor for remote transmitter (order transmitter separately), 3A approved	A
Ex sensor for remote transmitter (order transmitter separately) 3A approved	B
MAG 6000 I, Alu.18 ... 90 V DC, 115 ... 230 V AC	C
MAG 6000 I, Aluminum 18 ... 30 V DC, Ex	D
MAG 6000 I, Aluminum 115 ... 230 V AC, Ex	E
MAG 6000, Polyamide, 11 ... 30 V DC/11 ... 24 V AC	H
MAG 6000, Polyamide, 115 ... 230 V AC	J
MAG 5000, Polyamide, 11 ... 30 V DC/11 ... 24 V AC	K
MAG 5000, Polyamide, 115 ... 230 V AC	L

© Siemens 2020

Selection and ordering data

	Article No.
Sensor SITRANS FM MAG 1100 F ↗	**7ME6140-** ■■■■■-■■■■
↗ Click on the Article No. for the online configuration in the PIA Life Cycle Portal.	
Communication	
No communication, add-on possible	**A**
HART	**B**
PROFIBUS PA Profile 3 (only MAG 6000/MAG 6000 I)	**F**
PROFIBUS DP Profile 3 (not for Ex) (only MAG 6000/MAG 6000 I)	**G**
Modbus RTU/RS 485 (not for Ex) (only MAG 6000/MAG 6000 I)	**E**
FOUNDATION Fieldbus H1 (only MAG 6000/MAG 6000 I)	**J**
Cable glands/terminal box	
Metric: Polyamide terminal box or MAG 6000 I compact	**1**
½" NPT: Polyamide terminal box or MAG 6000 I compact	**2**
Metric: Stainless steel terminal box	**3**
½" NPT: Stainless steel terminal box	**4**

1) SMS 1145 standard is not approved by 3A

Additional information	Order code
Please add "**-Z**" to Article No. and specify Order code(s) and plain text.	
Certificates	
• Pressure test certificate according to EN 10204-3.1	**C01**
• Material certificate according to EN 10204-3.1	**C12**
• Factory certificate according to EN 10204-2.2	**C14**
• Factory certificate according to EN 10204-2.1	**C15**
Terminal blocks	
• Factory mounted terminal blocks	**N02**
Tag name plate, stainless steel (specify in plain text)	**Y17**
Tag name plate, plastic (self adhesive)	**Y18**
Customer-specific transmitter setting	**Y20**
Factory mounted sensor cables	
• Sensor cables wired (specify Article No. for sensor cables and order cables separately)	**Y40**
• Sensor cables wired and IP68 sealing (specify Article No. for sensor cables and order cables separately)	**Y41**
Additional calibrations	
• Matched-pair calibration	**On request**[1)]
• Accredited matched-pair calibration acc. to ISO/IEC 17025: 2005	**On request**[1)]
• Customer-specified calibration up to 10 points	**On request**[1)]
• Customer-witnessed calibration Any of above calibration	**On request**[1)]

1) Product Variation Request (PVR)

Operating instructions for SITRANS FM MAG 1100 F

Description	Article No.
• English	**A5E02435647**

All literature is available to download for free, in a range of languages, at
https://www.siemens.com/processinstrumentation/documentation

Accessories

Description	Article No.	
Potting kit for IP68/ NEMA 6P sealing of sensor junction box	**FDK:085U0220**	

© Siemens 2020

3

Selection and ordering data

Accessories for MAG 1100 F sensor

Weld-in connection fittings for use with P gaskets (Stainless steel)

Material: AISI 316L (1.4404)
Only for liner PFA
2 pcs. fittings
2 pcs. clamps (to join flow sensor and fitting),
P gaskets not included

DIN 11850[1)]

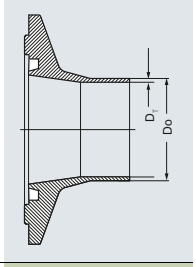

Adapter DN (mm)	D_o (mm)	D_T (mm)	Sensor DN (mm)	Article No.
10[2)]	13	1.5	10	**A5E02054630**
15[2)]	19	1.5	15	**A5E02054633**
20	23	1.5	15	**A5E02054634**
25	29	1.5	25	**A5E02054635**
32	35	1.5	25	**A5E02054637**
40	41	1.5	40	**A5E02054638**
50	53	1.5	50	**A5E02054640**
65	70	2.0	65	**A5E02054643**
80	85	2.0	80	**A5E02054644**
100	104	2.0	100	**A5E02054646**

ISO 2037[1)]

Adapter DN (mm)	D_o (mm)	D_T (mm)	Sensor DN (mm)	Article No.
12.7	12.7	1.0	10	**A5E03727946**
17.2	17.2	1.0	15	**A5E03728098**
25	25	1.6	25	**A5E02196073**
33	33.7	1.6	25	**A5E02196074**
38	38	1.6	40	**A5E02196075**
40	40	1.6	40	**A5E02196076**
51	51	1.6	50	**A5E02196077**
63.5	63.5	1.6	65	**A5E02196078**
76.1	76.1	1.6	80	**A5E02196080**
101.6	101.6	2.0	100	**A5E02196082**

Tri-Weld (BS 4825-1)[1)]

Adapter DN (mm)	D_o (mm)	D_T (mm)	Sensor DN (mm)	Article No.
12.7	12.7	1.2	10	**A5E02199113**
19.05	19.05	1.2	15	**A5E02199114**
25.4	25.4	1.6	25	**A5E02199115**
38.1	38.1	1.6	40	**A5E02199116**
50.8	50.8	1.6	50	**A5E02199117**
63.5	63.5	1.6	65	**A5E02199118**
76.2	76.2	1.6	80	**A5E02199119**
101.6	101.6	2.0	100	**A5E02199120**

Clamp-type connection fittings for use with P gaskets (Stainless steel)

Material: AISI 316L (1.4404)
Only for liner PFA
2 pcs. fittings
2 pcs. clamps (to join flow sensor and fitting),
P gaskets not included

DIN 32676[1)]

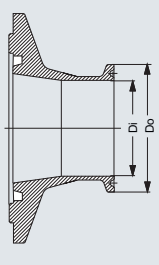

Adapter DN (mm)	D_o (mm)	D_i (mm)	Sensor DN (mm)	Article No.
10	34	10	10	**A5E02211143**
15	34	16	15	**A5E02211144**
25	50.5	22.6	25	**A5E02211146**
40	50.5	38	40	**A5E02211147**
50	64	50	50	**A5E02211148**
65	91	66	65	**A5E02211151**
80	106	81	80	**A5E02211152**
100	119	100	100	**A5E02211153**

ISO 2852[1)]

Adapter DN (mm)	D_o (mm)	D_i (mm)	Sensor DN (mm)	Article No.
25	50.5	22.6	25	**A5E02213581**
33.7	50.5	31.3	25	**A5E02213582**
38	50.5	35.6	40	**A5E02213583**
51	64	48.6	50	**A5E02213584**
63.5	77.5	60.3	65	**A5E02213585**
76.1	91	72.9	80	**A5E02213586**
101.6	119	97.6	100	**A5E02213587**

Tri-Clamp (BS 4825-3)[1)]

Adapter DN (mm)	D_o (mm)	D_i (mm)	Sensor DN (mm)	Article No.
12.7	25.4	9.5	10	**A5E02213596**
19.05	25.4	15.85	15	**A5E02213597**
25.4	50.5	22.2	25	**A5E02213598**
38.1	50.5	34.9	40	**A5E02213599**
50.8	64	47.6	50	**A5E02213600**
63.5	77.5	60.3	65	**A5E02213601**
76.2	91	73	80	**A5E02213602**
101.6	119	97.6	100	**A5E02213603**

D_o: Outer diameter
D_i: Inner diameter
1) Suitable for EHEDG
2) Not suitable for EHEDG

© Siemens 2020

Selection and ordering data

Threaded type connection fittings for use with P gaskets (Stainless steel)

Material: AISI 316L (1.4404)
Only for liner PFA
2 pcs. fittings
2 pcs. clamps (to join flow sensor and fitting),
P gaskets not included

DIN 11851[1)]

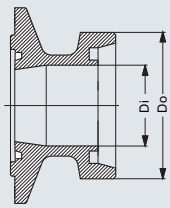

Adapter DN (mm)	D_O (mm)	D_T (mm)	Sensor DN (mm)	Article No.
10	28	10	10	**A5E02218293**
15	34	16	15	**A5E02218294**
20	44	20	15	**A5E02218295**
25	52	26	25	**A5E02218296**
32	58	32	25	**A5E02218297**
40	65	38	40	**A5E02218298**
50	78	50	50	**A5E02218299**
65	95	66	65	**A5E02218300**
80	110	81	80	**A5E02218301**
100	130	100	100	**A5E02218302**

SMS 1145[1)]

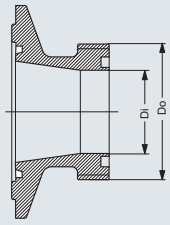

Adapter DN (mm)	D_O (mm)	D_i (mm)	Sensor DN (mm)	Article No.
25	40	22.6	25	**A5E02218310**
38	60	35.6	40	**A5E02218312**
51	70	48.6	50	**A5E02218313**
63.5	85	60.3	65	**A5E02218314**
76	98	72	65	**A5E02218315**

D_O: Outer diameter
D_i: Inner diameter
1) Suitable for EHEDG

Weld-in connection fittings for use with flat gaskets (Stainless steel)

Material: AISI 316L (1.4404)
For liner PFA and ceramic
2 pcs. fittings
2 pcs. clamps (to join flow sensor and fitting),
Flat gaskets not included

DIN 11850[1)]

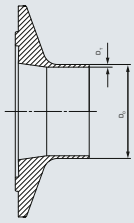

Adapter DN (mm)	D_O (mm)	D_T (mm)	Sensor DN (mm)	Article No.
10	13	1.5	10	**FDK:083G2116**
15	19	1.5	15	**FDK:083G2117**
20	23	1.5	15	**FDK:083G2118**
25	29	1.5	25	**FDK:083G2119**
32	35	1.5	25	**FDK:083G2120**
40	41	1.5	40	**FDK:083G2121**
50	53	1.5	50	**FDK:083G2122**
65	70	2.0	65	**FDK:083G2123**
80	85	2.0	80	**FDK:083G2124**
100	104	2.0	100	**FDK:083G2125**

ISO 2037[1)]

Adapter DN (mm)	D_O (mm)	D_T (mm)	Sensor DN (mm)	Article No.
12.7	12.7	1.0	10	**A5E03720273**
17.2	17.2	1.0	15	**FDK:083G2107**
25	25.6	1.6	25	**FDK:083G2109**
33.7	33.7	1.6	25	**FDK:083G2100**
38	38	1.6	40	**FDK:083G2111**
40	40	1.6	40	**FDK:083G2101**
51	51	1.6	50	**FDK:083G2112**
63.5	63.5	1.6	65	**FDK:083G2113**
76.1	76.1	1.6	80	**FDK:083G2114**
101.6	101.6	2.0	100	**FDK:083G2115**
114.3	118.3	2.0	100	**FDK:083G2105**

Tri-Weld (BS 4825-1)[1)]

Adapter DN (mm)	D_O (mm)	D_T (mm)	Sensor DN (mm)	Article No.
12.7	12.7	1.2	10	**FDK:083G2276**
19.05	19.05	1.2	15	**FDK:083G2277**
25.4	25.4	1.6	25	**FDK:083G2279**
38	38.1	1.6	40	**FDK:083G2281**
50.8	50.8	1.6	50	**FDK:083G2282**
63.5	63.5	1.6	65	**FDK:083G2283**
76.2	76.2	1.6	80	**FDK:083G2284**
101.6	101.6	2.0	100	**FDK:083G2285**

© Siemens 2020

3

Selection and ordering data

Clamp-type connection fittings for use with flat gaskets (Stainless steel)

Material: AISI 316L (1.4404)
For liner PFA and ceramic
2 pcs. fittings
2 pcs. clamps (to join flow sensor and fitting),
Flat gaskets not included

DIN 32676[1)]

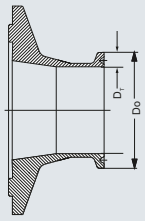

Adapter DN (mm)	D_O (mm)	D_T (mm)	Sensor DN (mm)	Article No.
10	34	10	10	**FDK:083G2186**
15	34	16	15	**FDK:083G2187**
25	50.5	26	25	**FDK:083G2179**
40	50.5	38	40	**FDK:083G2181**
50	64	50	50	**FDK:083G2182**
65	91	66	65	**FDK:083G2183**
80	106	81	80	**FDK:083G2184**
100	119	100	100	**FDK:083G2185**

ISO 2852[1)]

Adapter DN (mm)	D_O (mm)	D_T (mm)	Sensor DN (mm)	Article No.
25	50.5	22.6	25	**FDK:083G2189**
33.7	50.5	31.3	25	**FDK:083G2190**
38	50.5	35.6	40	**FDK:083G2191**
51	64	48.6	50	**FDK:083G2192**
63.5	77.5	60.3	65	**FDK:083G2193**
76.1	91	72.9	80	**FDK:083G2194**
101.6	119	97.6	100	**FDK:083G2195**

Tri-Clamp (BS 4825-3)[1)]

Adapter DN (mm)	D_O (mm)	D_T (mm)	Sensor DN (mm)	Article No.
12.7	25.4	9.5	10	**FDK:083G2286**
19.05	25.4	15.85	15	**FDK:083G2287**
25.4	50.5	22.2	25	**FDK:083G2289**
38.1	50.5	34.9	40	**FDK:083G2291**
50.8	64	47.6	50	**FDK:083G2292**
63.5	77.5	60.3	65	**FDK:083G2293**
76.2	91	73	80	**FDK:083G2294**
101.6	119	97.6	100	**FDK:083G2295**

1) D_O: Outer diameter
2) D_i: Inner diameter
3) 1) Suitable for 3A

Threaded type connection fittings for use with flat gaskets (Stainless steel)

Material: AISI 316L (1.4404)
For liner PFA and ceramic
2 pcs. fittings
2 pcs. clamps (to join flow sensor and fitting),
Flat gaskets not included

DIN 11851[1)]

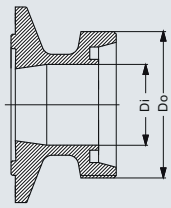

Adapter DN (mm)	D_O (mm)	D_i (mm)	Sensor DN (mm)	Article No.
10	28	10	10	**FDK:083G2156**
15	34	16	15	**FDK:083G2157**
20	44	20	15	**FDK:083G2158**
25	52	26	25	**FDK:083G2159**
32	58	32	25	**FDK:083G2160**
40	65	38	40	**FDK:083G2161**
50	78	50	50	**FDK:083G2162**
65	95	66	65	**FDK:083G2163**
80	110	81	80	**FDK:083G2164**
100	130	100	100	**FDK:083G2165**

ISO 2853[1)]

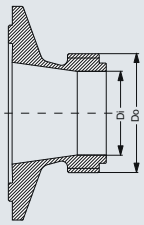

Adapter DN (mm)	D_O (mm)	D_i (mm)	Sensor DN (mm)	Article No.
25	37	22.6	25	**FDK:083G2149**
38	51	35.6	40	**FDK:083G2151**
51	64	48.6	50	**FDK:083G2152**
63.5	78	60.3	65	**FDK:083G2153**
76.1	91	72.9	80	**FDK:083G2154**

BS 4825-4[1)]

Adapter DN (mm)	D_O (mm)	D_i (mm)	Sensor DN (mm)	Article No.
101.6	126	97.6	100	**FDK:083G2145**

SMS 1145[2)]

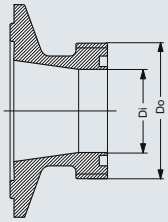

Adapter DN (mm)	D_O (mm)	D_i (mm)	Sensor DN (mm)	Article No.
25	40	22.6	25	**FDK:083G2139**
38	60	35.6	40	**FDK:083G2141**
51	70	48.6	50	**FDK:083G2142**
63.5	85	60.3	65	**FDK:083G2143**
76	98	72	65	**FDK:083G2144**

D_O: Outer diameter
D_i: Inner diameter
1) Suitable for 3A
2) Not suitable for 3A

© Siemens 2020

Selection and ordering data

Spare parts for MAG 1100 F sensor

	Article No.
Gaskets	
(delivered in pairs, to be placed between flow sensor and adapter)	
MAG 1100 F (PFA) - P gaskets	
Rubber: EPDM	
• DN 10	**A5E02055286**
• DN 15	**A5E02055287**
• DN 25	**A5E02055290**
• DN 40	**A5E02055291**
• DN 50	**A5E02055292**
• DN 65	**A5E02055293**
• DN 80	**A5E02055295**
• DN 100	**A5E02055297**
MAG 1100 F (ceramic) - Flat gaskets	
Rubber: FKM/FPM	
• DN 10	**A5E00915707**
• DN 15	**A5E00915764**
• DN 25	**A5E00915771**
• DN 40	**A5E00915773**
• DN 50	**A5E00915775**
• DN 65	**A5E00915780**
• DN 80	**A5E00915782**
• DN 100	**A5E00915784**
MAG 1100 F (PFA, ceramic) - Flat gaskets	
Rubber: EPDM	
• DN 10	**FDK:083G2206**
• DN 15	**FDK:083G2207**
• DN 25	**FDK:083G2209**
• DN 40	**FDK:083G2211**
• DN 50	**FDK:083G2212**
• DN 65	**FDK:083G2213**
• DN 80	**FDK:083G2214**
• DN 100	**FDK:083G2215**
Rubber: NBR	
• DN 10	**FDK:083G2216**
• DN 15	**FDK:083G2217**
• DN 25	**FDK:083G2219**
• DN 40	**FDK:083G2221**
• DN 50	**FDK:083G2222**
• DN 65	**FDK:083G2223**
• DN 80	**FDK:083G2224**
• DN 100	**FDK:083G2225**

© Siemens 2020

3

Dimensional drawings

Sensor MAG 1100 F compact/remote

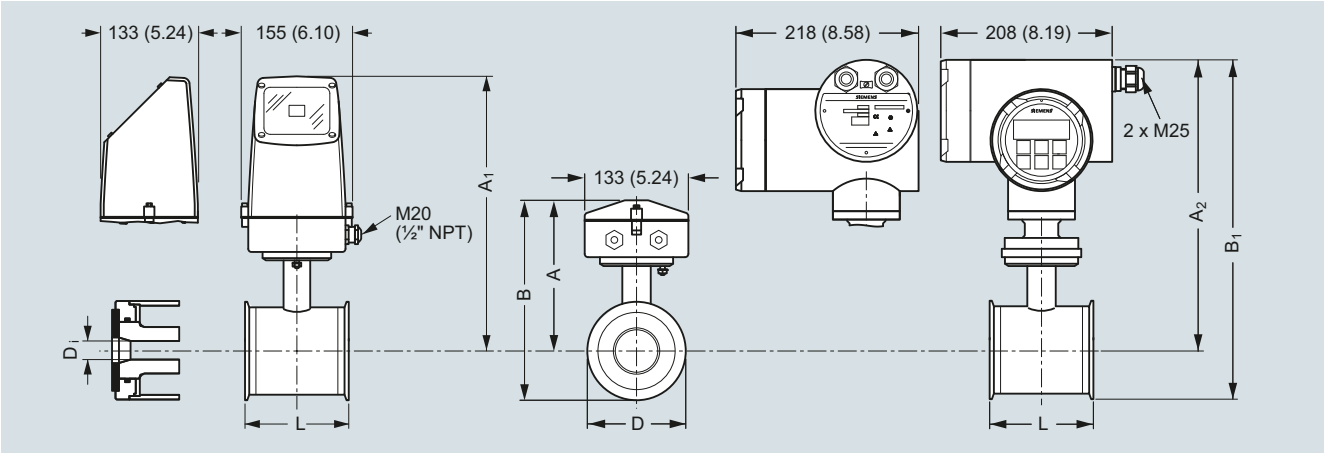

Dimensions in mm (inch)

Important note:
For compact installation with MAG 6000 I/Ex - Supports the transmitter to avoid tension on the sensor part.

Size DN	L [mm]	A [mm]	A_1 3) [mm]	B 2) [mm]	B_1 [mm]	D [mm]	D_i (Al_2O_3) [mm]	D_i PFA [mm]	Weight 1) [kg]
10	64	161	315	193.7	344.7	64.0	10	10	2.2
15	64	161	315	193.7	344.7	64.0	15	16	2.2
25	79	169	323	207.5	359.0	77.5	25	26	2.7
40	94	179	333	228.0	379.0	91.0	40	38	3.4
50	104	188	342	247.7	398.7	119.0	50	50	4.2
65	131	197.5	351	262.6	413.6	130.0	65	66	5.5
80	156	204	357	281.0	432.0	155.0	80	81	7.0
100	186	217	370	308.0	459.0	183.0	100	100	10.0

Size [inch]	L [inch]	A [inch]	A_1 3) [inch]	B 2) [inch]	B_1 [inch]	D [inch]	D_i (Al_2O_3) [inch]	D_i PFA [inch]	Weight 1) [lb]
3/8	2.52	6.34	12.40	7.62	13.57	2.52	0.39	0.39	4.8
½	2.52	6.34	12.40	7.62	13.57	2.52	0.59	0.63	4.8
1	3.11	6.66	12.72	8.17	14.13	3.05	0.98	1.02	4.9
1½	3.70	7.05	13.11	8.98	14.92	3.58	1.57	1.50	7.5
2	4.09	7.40	13.47	9.75	15.70	4.68	1.97	1.97	9.2
2½	5.16	7.78	13.82	10.34	16.28	5.12	2.56	2.60	12.0
3	6.14	8.03	14.06	11.06	17.01	6.10	3.15	3.19	15.0
4	7.32	8.54	14.57	12.13	18.07	7.20	3.94	3.94	22.0

1) With transmitter MAG 5000 or MAG 6000 compact, weight is increased by approximately 0.8 kg (1.8 lb).
With MAG 6000 I weight is increased with 5.5 kg (12.1 lbs)

2) 14.5 mm (0.571") shorter when the stainless steel terminal box is used (always Ex version).

3) A_2 is 3 mm (0.12") shorter than A_1

© Siemens 2020

Dimensional drawings (continued)

Sensor MAG 1100 F compact/separate – built-in length

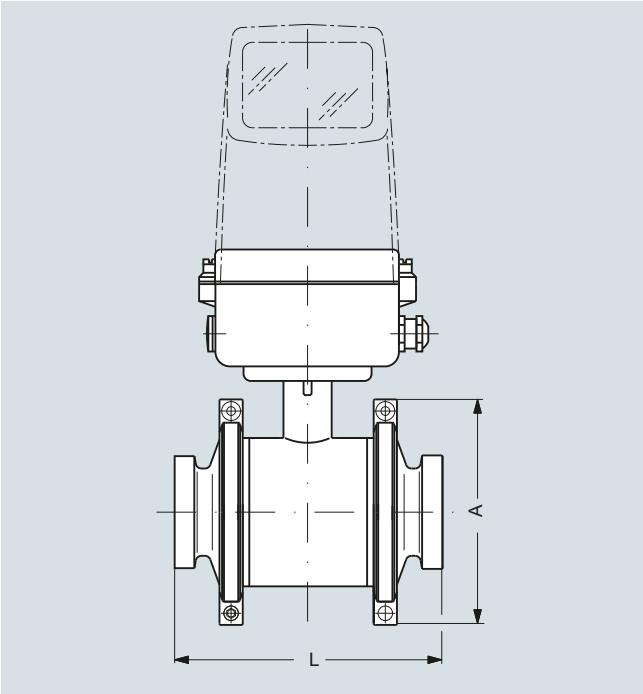

Size		A		L [1]	
DN	**Inch**	**[mm]**	**[inch]**	**[mm]**	**[inch]**
10	3/8	99	3.90	146	5.75
15	½	99	3.90	146	5.75
25	1	113	4.45	161	6.34
40	1½	126	4.96	176	6.93
50	2	154	6.06	186	7.32
65	2½	165	6.50	223	8.78
80	3	200	7.87	258	10.16
100	4	225	8.86	288	11.34

[1] The total built-in length “L” is independent of the adapter type selected.

© Siemens 2020

Overview

The SITRANS FM MAG 3100 is an electromagnetic flow sensor in a large variety that meets the demands of almost every flow application.

Benefits

- Wide range of sizes: DN 15 to DN 2000 (½" to 78")
- The flexible design is for all applications not covered by the standard industry-specific sensors: MAG 1100, MAG 1100 F, MAG 3100 P and MAG 5100 W
- Wide pressure range: PN 6 to PN 100
- ANSI Class 150/300, AS 2129, AS 4087, JIS K10 and K20. On request up to 690 bar (10 000 psi)
- Wide range of electrode and liner material to fit even the most extreme process media
- Fully welded construction provides a ruggedness that suits the toughest applications and environments.
- Easy commissioning, the SENSORPROM unit automatically updates settings.
- Designed to allow patented SITRANS FM in-situ verification using the SENSORPROM fingerprints.

Application

The main applications of the SITRANS FM electromagnetic flow sensors can be found in the following fields:

- Process industry
- Chemical industry
- Steel industry
- Mining
- Utility
- Power generation and distribution
- Oil and gas/HPI
- Water and waste water

Design

- Compact or remote mounting possible
- Easy “plug & play” field changeability of transmitter
- ATEX and FM/CSA versions
- High temperature sensor for applications with temperatures up to 180 °C (356 °F)
- Meets EEC directives: PED, 2014/68/EU pressure directive for EN 1092-1 flanges
- Built-in length according to ISO 20456, the standard includes sizes up to DN 400
- Onsite or factory upgrade to IP68/NEMA 6P of a standard sensor.

Mode of operation

The flow measuring principle is based on Faraday’s law of electromagnetic induction according to which the sensor converts the flow into an electrical voltage proportional to the velocity of the flow.

Integration

The complete flowmeter consists of a flow sensor and an associated transmitter MAG 5000, 6000 and 6000 I.

The flexible communication concept USM II simplifies integration and update to a variety of fieldbus systems such as HART, FOUNDATION Fieldbus H1, DeviceNet, PROFIBUS DP and PA, Modbus RTU/RS485.

© Siemens 2020

Integration (continued)

Pressure/temperature curve; material AISI 316L/1.4404 AS 2129, Class E

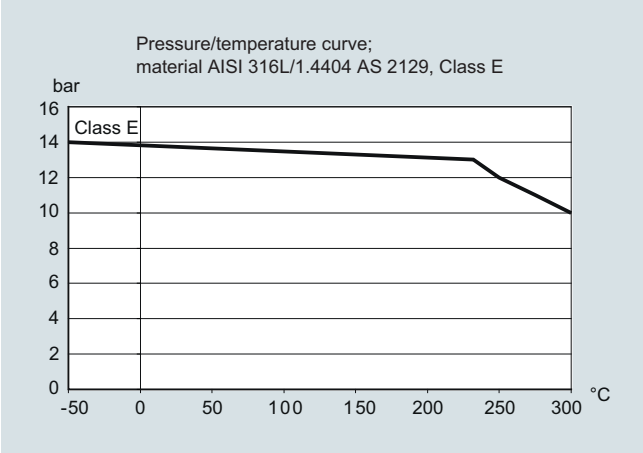

Pressure/temperature curve to EN (DIN) flanges AISI 304

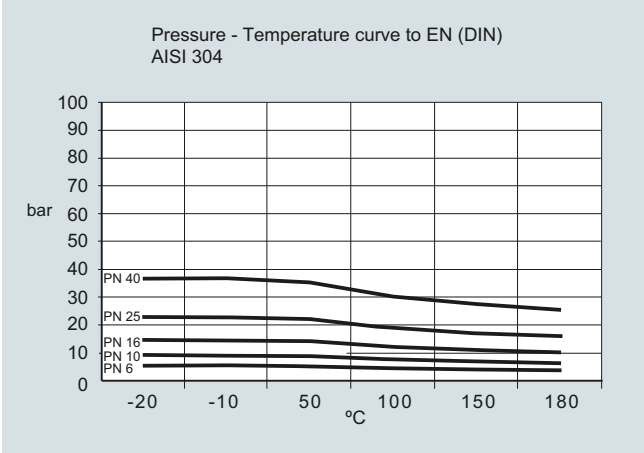

Pressure/temperature curve - JIS 2200

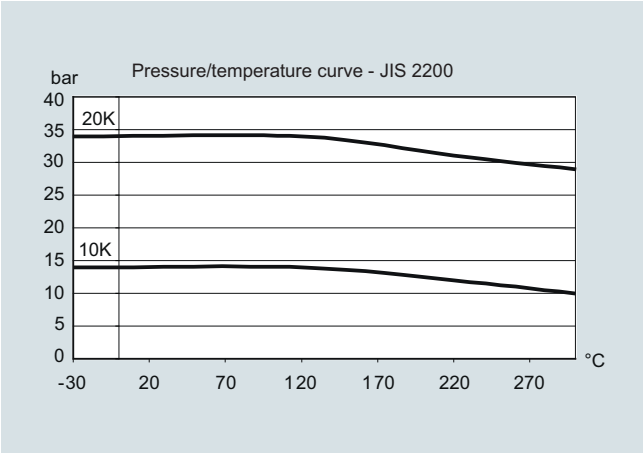

Pressure/temperature curve to EN (DIN) flanges AISI 316

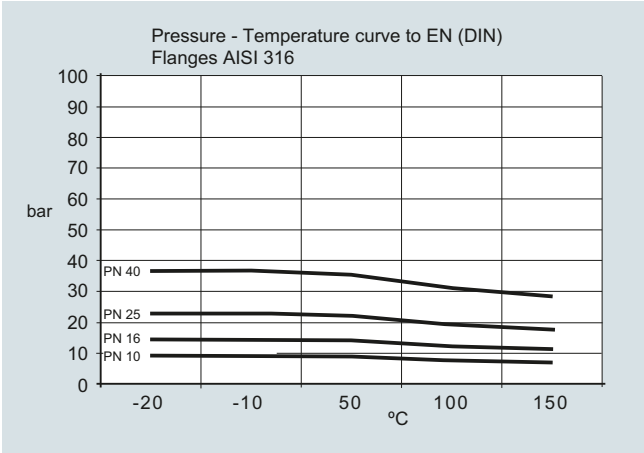

Pressure/temperature curve to EN (DIN) flanges, material A 105 carbon steel

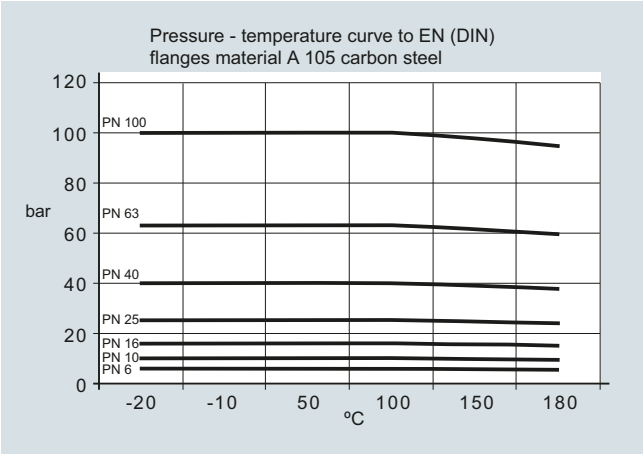

Pressure/temperature curve to ANSI B16.5 flanges

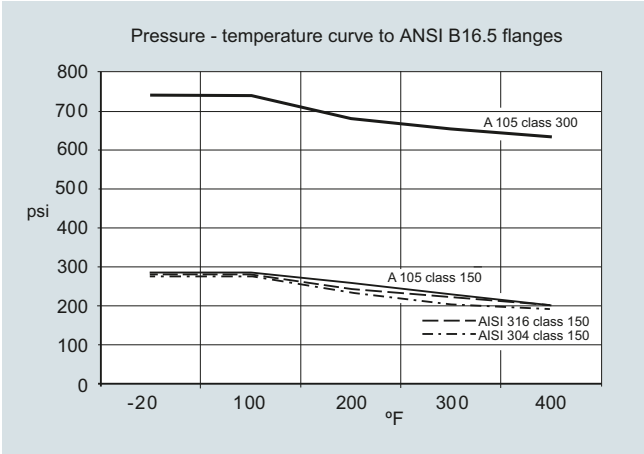

Note: The pressure-temperature curves only assist in the selection of a system. No responsibility is taken for the correctness of the information. For further information on PED standard see Pressure Equipment Directive in Appendix (chapter 10).

© Siemens 2020

Technical specifications

Version	MAG 3100	MAG 3100 HT (High Temperature)
Product characteristic	Flexible product program	Flexible product program
Nominal size	DN 15 … DN 2000 (½" … 78")	DN 15 … DN 300 (½" … 12")
Measuring principle	Electromagnetic induction	Electromagnetic induction
Excitation frequency (Mains supply: 50 Hz/60 Hz)	• DN 15 … 65 (½" … 2½"): 12.5 Hz/15 Hz • DN 80 … 150 (3" … 6"): 6.25 Hz/7.5 Hz • DN 200 … 1200 (8" … 48"): 3.125 Hz/3.75 Hz • DN 1400 … 2000 (54" … 78"): 1.5625 Hz/1.875 Hz	• DN 15 … 65 (½" … 2½"): 12.5 Hz/15 Hz • DN 80 … 150 (3" … 6"): 6.25 Hz/7.5 Hz • DN 200 … 300 (8" … 12"): 3.125 Hz/3.75 Hz
Process connection		
Flanges	EN 1092-1, raised face[1)] (EN 1092-1, DIN 2501 & BS 4504 have the same mating dimensions) • DN 65 … 2000 (2½" … 78"): PN 6 (87 psi) • DN 200 … 2000 (8" … 78"): PN 10 (145 psi) • DN 65 … 2000 (2½" … 78"): PN 16 (232 psi) • DN 200 … 600 (8" … 24"): PN 25 (362 psi) • DN 15 … 600 (½" … 24"): PN 40 (580 psi) • DN 50 … 300 (2" … 12"): PN 63 (913 psi) • DN 25 … 300 (1" … 12"): PN 100 (1450 psi) ANSI B16.5 (~BS 1560), raised face: • ½" … 24": Class 150 (20 bar (290 psi)) • ½" … 24": Class 300 (50 bar (725 psi)) • ½" … 18": Class 600 (100 bar (1450 psi)) AWWA C-207, flat face 28" … 78": Class D (10 bar) AS 2129, raised face ½" … 48": Table E AS 4087, raised face: • PN 16 (DN 50 … 1200, 16 bar (232 psi)) • PN 21 (DN 50 … 600, 21 bar (304 psi)) • PN 35 (DN 50 … 600, 35 bar (508 psi)) JIS B 2220:2004 • K10 (1" … 24") • K20 (1" … 24") Other flanges and pressure ratings on request	EN 1092-1, raised face (EN 1092-1, DIN 2501 & BS 4504 have the same mating dimensions) • DN 15 … 300 (½" … 12"): PN 40 (580 psi) • DN 65 … 300 (2½" … 12"): PN 16 (232 psi) • DN 200 … 300 (8" … 12"): PN 10 (145 psi) • DN 200 … 300 (8" … 12"): PN 25 (362 psi) ANSI B16.5 (~BS 1560), raised face: • ½" … 12": Class 150 (20 bar (290 psi)) • ½" … 12": Class 300 (50 bar (725 psi)) AS 2129, raised face ½" … 12": Table E Other flanges and pressure ratings on request
Rated operation conditions		
Ambient temperature (conditions also dependent on liner characteristiques)		
• Standard sensor	-40 … +100 °C (-40 … +212 °F)	-40 … +100 °C (-40 … +212 °F)
• Ex sensor	-20 … +60 °C (-4 … +140 °F)	For medium temperature up to 150 °C (302 °F): -20 … +60 °C (-4 … +140 °F) For medium temperature 150 … 180 °C (302 … 356 °F): -20 … +50 °C (-4 … +122 °F)
• Compact with transmitter		
- MAG 5000/6000	-20 … +60 °C (-4 … +140 °F)	-20 … +60 °C (-4 … +140 °F)
- MAG 6000 I	-20 … +60 °C (-4 … +140 °F)	-20 … +60 °C (-4 … +140 °F)
- MAG 6000 I Ex	-20 … +60 °C (-4 … +140 °F)	-20 … +60 °C (-4 … +140 °F)

© Siemens 2020

Technical specifications (continued)

Version	MAG 3100	MAG 3100 HT (High Temperature)
Operating pressure	• Softrubber 0.01 … 100 bar (0.15 … 1450 psi)	
[abs. bar] (maximum operating pressure decreases with increasing operating temperature and with stainless steel flanges)	• EPDM 0.01 … 40 bar (0.15 … 580 psi)	
	• Linatex 0.01 … 40 bar (0.15 ... 580 psi)	
	• Ebonite 0.01 … 100 bar (0.15 … 1450 psi)	
	• PTFE	• PTFE Teflon
	- DN ≤ 300 (≤ 12"): 0.3 … 50 bar (4 … 725 psi)	- DN 15 … 300 (½" … 12"): 0.3/0.6 … 50 bar (4/8 … 725 psi) (180 °C (356 °F). Factory mounted grounding rings type E in stainless steel and stainless steel terminal box. Can nly be used with remote transmitter.
	- 350 ≤ DN ≤ 600 (14"≤ DN ≤ 24"): 0.3 … 40 bar (4 … 580 psi)	
	• PFA	• PFA
	- DN 15 … 150 (½" … 6"): Vacuum 0.02 … 50 bar (0.29 … 725 psi)	- DN 15 … 150 (½" … 6"): Vacuum 0.02 … 50 bar (0.29 … 725 psi)
Enclosure rating	IP67 to EN 60529/NEMA 6P/10, 1 mH_2O for 30 min	IP67 to EN 60529/NEMA 4X/6, 1 mH_2O for 30 min
	Option: IP68 to EN 60529/NEMA 6P,10 mH_2O cont.	Option: IP68 to EN 60529/NEMA 6P,10 mH_2O cont.
Pressure drop at 3 m/s	As straight pipe	
Test pressure	1.5 x PN (where applicable)	
Mechanical load (vibration)	18 … 1000 Hz random in x, y, z, directions for 2 hours according to EN 60068-2-36	18 … 1000 Hz random in x, y, z, directions for 2 hours according to EN 60068-2-36
	Sensor: 3.17 g RMS	Sensor: 3.17 g RMS
	Sensor with compact MAG 5000/6000 mounted transmitter: 3.17 g RMS	Sensor with compact MAG 5000/6000 mounted transmitter: 3.17 g RMS
	Sensor with compact MAG 6000 I/6000 I Ex mounted transmitter: 1.14 g RMS	Sensor with compact MAG 6000 I/6000 I Ex mounted transmitter: 1.14 g RMS
Temperature of medium	• Soft rubber 0 … +70 °C (32 … 158 °F)	• PTFE -20 … +130 °C (-4 … +266 °F)
	• EPDM -10 … +70 °C (14 … 158 °F)	• PTFE -20 … +180 °C (-4 … +356 °F) Factory mounted grounding rings type E in stainless steel and stainless steel terminal box. Can only be used with remote transmitter.
	• Linatex (rubber) -40 … +70 °C (-40 … +158 °F) (for temperatures below -20 °C (-4 °F) AISI 304 or 316 flanges must be used)	• PFA -20 … +150 °C (-4 … +300 °F)
	• Ebonite 0 … 95 °C (32 … 203 °F)	
	• PTFE -20 … +100 °C (-4 … +212 °F)	
	• PFA -20 … +100 °C (-4 … +212 °F)	
EMC	2014/30/EU	2014/30/EU
Design		
Weight	See dimensional drawings	
Flange and housing material	Carbon steel ASTM A 105, with corrosion resistant coating of category C4 or C5 according to ISO 12944-2	Carbon steel ASTM A 105, with corrosion resistant coating of category C4 according to ISO 12944-2
	or	or
	Stainless steel AISI 304/1.4301flanges and carbon steel housing, with corrosion resistant coating of category C4 or C5 according to ISO 12944-2	Stainless steel AISI 304/1.4301 flanges and carbon steel housing, with corrosion resistant coating of category C4 according to ISO 12944-2
	or	or
	Stainless steel AISI 316L/1.4404 flanges and housing, polished	Stainless steel AISI 316L/1.4404 flanges and housing, polished
Measuring pipe material	Stainless steel AISI 304/1.4301	Stainless steel AISI 304/1.4301
Electrode material	• Stainless steel AISI 316Ti/1.4571	• Stainless steel AISI 316Ti/1.4571
	• Hastelloy C276/2.4819 (PFA: Hastelloy C22/2.4602)	• Hastelloy C276/2.4819 (PFA: Hastelloy C22/2.4602)
	• Platinum	• Platinum
	• Titanium	• Titanium
	• Tantalum	• Tantalum
	• Ceramic coated stainless steel	
	• Ceramic coated Hastelloy C	
Grounding electrode material	• Soft rubber, EPDM, Linatex, Ebonite: grounding electrodes built-in by default for stainless steel and Hastelloy C.	
	• PTFE: optional in Stainless steel, Hastelloy C, Titanium, Platinum or Tantalum	• PTFE: no grounding electrodes
	• PFA: optional in Hastelloy, Tantalum or Platinum	• PFA: optional in Hastelloy, Tantalum or Platinum
	• Ceramic coated stainless steel and Hastelloy C276: grounding electrodes built-in by default	

© Siemens 2020

Technical specifications (continued)

Version	MAG 3100	MAG 3100 HT (High Temperature)
Design (continued)		
Terminal box (remote version only)	• Standard fibre glass reinforced polyamide	• Standard fibre glass reinforced polyamide (max. 150 °C (302 °F))
	• Option Stainless steel AISI 316/1.4436	• Stainless steel AISI 316/1.4436
	• Ex Stainless steel AISI 316/1.4436	• Ex Stainless steel AISI 316/1.4436
Cable entries	• Remote installation 2 x M20 or 2 x ½" NPT	• Remote installation 2 x M20 or 2 x ½" NPT
	• Compact installation	
	• MAG 5000/MAG 6000: 4 x M20 or 4 x ½" NPT	
	• MAG 6000 I: 2 x M25 or 2 x ½" NPT (for supply/output)	
	• MAG 6000 I Ex: 2 x M25 or 2 x ½" NPT (for supply/output)	
Certificates and approvals		
Calibration		
• Default calibration	Zero-point, 2 x 25 % and 2 x 90 % (default)	Zero-point, 2 x 25 % and 2 x 90 %
• Special calibration	5-point calibration: 20%, 40%, 60%, 80%, 100% of factory Q_{max} 10-point calibration: ascending and descending at 20%, 40%, 60%, 80%, 100% of factory Q_{max} Matched pair calibration: default, 5-point or 10-point	
Hazardous areas[2]		
• Ex-sensor in compact or remote version with MAG 6000 I Ex	• ATEX, FM, CSA, IECEx, EAC Ex, NEPSI - Zone 1 Ex d e ia IIC T6 Gb[4] - Zone 1 Ex e ia IIC T6 Gb[5] • ATEX, FM, CSA, IECEx - Zone 21 Ex tD A21 IP67 • FM - XP IS Class I Div. 1 Groups A, B, C, D[6] - DIP Class II+III Div. 1 Groups E, F, G[6]	• ATEX, FM, CSA, IECEx, EAC Ex, NEPSI - Zone 1 Ex d e ia IIC T6 Gb[4] - Zone 1 Ex e ia IIC T6 Gb[5] • ATEX, FM, CSA, IECEx - Zone 21 Ex tD A21 IP67 • FM - XP IS Class I Div. 1 Groups A, B, C, D[6] - DIP Class II+III Div. 1 Groups E, F, G[6]
• Standard sensor with/without MAG 5000/6000/6000 I	• FM - NI Class I Div. 2 Groups A, B, C, D - NI Class I Zone 2 Groups IIC	• FM - NI Class I Div. 2 Groups A, B, C, D - NI Class I Zone 2 Groups IIC
Drinking water	EPDM liner: • WRAS (WRc, BS690 cold water, GB) • NSF/ANSI Standard 617) (Cold water, US) • ACS listed (F) • DVGW W270 (D) • Belgaqua (B) • MCERTS (GB) (EPDM or PTFE lining with AISI 316 or Hastelloy electrodes)	
Pressure equipment	• PED conforming: All EN1092-1 flanges - 2014/68/EU[3] • CRN	• PED conforming: All EN1092-1 flanges - 2014/68/EU[3] • CRN
Others	• EAC (Russia, Belarus, Kzakhstan) • KCC (South Korea) • CMC/CPA (China)	• EAC (Russia, Belarus, Kzakhstan) • KCC (South Korea)

Technical specification for transmitter - please see section about transmitters.

1) PN 6-40: DN ≤ 600 type 01 (SORF); DN > 600 type 11 (WNRF); PN 63-100: type 11 (WNRF)

2) Not for sensors with 300 µm coating.

3) For sizes larger than 600 mm (24") in PN 16 PED conformity is available as a cost-added option. The basic unit will carry the LVD (Low Voltage Directive) and EMC approval. All products sold outside of EU and EFTA are excluded from the Pressure Equipment directive, also products sold into certain market sectors are excluded. These include

a) Meters used in networks for the supply, distribution and discharge of water.

b) Meters used in pipelines for the conveyance of any fluid from offshore to onshore.

c) Meters used in the extraction of petroleum or gas, including christmas tree and manifold equipment.

d) Any meter mounted on a ship or mobile offshore platform. For further information on the PED standard and requirements see Pressure Equipment Directive in Appendix (chapter 10).

4) In remote version with sensor size DN 15 ... DN 300 (½" ... 12")

5) In remote version with sensor size DN 350 ... DN 2000 (14" ... 48")

6) In compact version with sensor size DN 15 ... DN 300 (½" ... 12")

7) Has to be ordered with the meter. It is not possible to order the certificate afterwards.

© Siemens 2020

Selection and ordering data

Sensor SITRANS FM MAG 3100 ↗	Article No. 7ME6310-															Ord. code
	■	■	■	■	■	-	■	■	■	■			■	■	■	
↗ Click on the Article No. for the online configuration in the PIA Life Cycle Portal.																
Diameter																
DN 15 (½") (PTFE and PFA liner)	1	V														
DN 25 (1")	2	D														
DN 32 (11/4")	2	H														
DN 40 (1½")	2	R														
DN 50 (2")	2	Y														
DN 65 (2½")	3	F														
DN 80 (3")	3	M														
DN 100 (4")	3	T														
DN 125 (5")	4	B														
DN 150 (6")	4	H														
DN 200 (8")	4	P														
DN 250 (10")	4	V														
DN 300 (12")	5	D														
DN 350 (14")	5	K														
DN 400 (16")	5	R														
DN 450 (18")	5	Y														
DN 500 (20")	6	F														
DN 600 (24")	6	P														
DN 700 (28")	6	Y														
DN 750 (30") (AWWA and AS 2129 only)	7	D														
DN 800 (32")	7	H														
DN 900 (36")	7	M														
DN 1000 (40")	7	R														
DN 1050 (42") (AWWA only)	7	U														
DN 1100 (44") (AWWA only)	7	V														
DN 1200 (48")	8	B														
DN 1400 (54")	8	F														
DN 1500 (60")	8	K														
DN 1600 (66")	8	P														
DN 1800 (72")	8	T														
DN 2000 (78")	8	Y														
Flange norm and pressure rating																
EN 1092-1																
PN 6 (DN 65 ... 2000 (2½" ... 78"))			A													
PN 10 (DN 200 ... 2000 (8" ... 78"))			B													
PN 16 (DN 65 ... 1200 (2½" ... 48"))			C													
PN 16, non-PED (DN 700 ... 2000 (28" ... 78"))			D													
PN 25 (DN 200 ... 600 (8" ... 24"))			E													
PN 40 (DN 15 ... 600 (½" ... 24"))			F													
PN 63 (DN 50 ... 300 (2" ... 12"))			G													
PN 100 (DN 25 ... 300 (1" ... 12"))			H													
ANSI B16.5																
Class 150 (½" ... 24")			J													
Class 300 (½" ... 24")			K													
Class 600 (½" ... 18")			U													
AWWA C-207																
Class D (28" ... 78")			L													
AS																
2129, table E			M													
4087, PN 16 (DN 50 ... 1200 (2" ... 48")) (Not PTFE and PFA)			N													
4087, PN 21 (DN 50 ... 600 (2" ... 24")) (Not PTFE and PFA)			P													
4087, PN 35 (DN 50 ... 600 (2" ... 24")) (Not PTFE and PFA)			Q													
JIS B 2220:2004																
K10 (1" ... 24")			R													
K20 (1" ... 24")			S													

Sensor SITRANS FM MAG 3100	Article No. 7ME6310-															Ord. code
	■	■	■	■	■	-	■	■	■	■			■	■	■	
Flange material and coating																
Carbon steel flanges ASTM A 105, corrosion-resistant coating of category C4			1													
Stainless steel flanges, AISI 304/1.4301, corrosion-resistant coating of category C4			2													
Stainless steel flanges and sensor body, AISI 316L/1.4404, polished			3													
Carbon steel flanges ASTM A 105, 300 mm corrosion-resistant coating of category C5			4													
Stainless steel flanges, AISI 304/1.4301, 300 mm corrosion-resistant coating of category C5			5													
Liner material																
Soft rubber				1												
EPDM				2												
PTFE (DN ≤ 300, PN ≤ 50 bar / ≤ 12", PN ≤ 725 psi), PTFE (350 ≤ DN ≤ 600, PN ≤ 40 bar / 14" ≤ DN ≤ 24", PN ≤ 580 psi)				3												
Ebonite				4												
Linatex (PN ≤ 40 bar (580 psi) DN ≤ 600 (24"))				5												
PFA (DN 15 ... 150 (½" ... 6")) (PN ≤ 40 bar (580 psi))				7												
Electrode material																
(Grounding electrodes not for pressure rating PN 100)																
AISI 316Ti/1.4571 (not for PFA)						1										
Hastelloy C276/2.4819 (PFA liner: Hastelloy C22/2.4602)						2										
Platinum (DN ≤ 300 (12")) (not for Ebonite)						3										
Titanium (not for PFA) (DN ≤ 600/24")						4										
Tantalum (DN ≤ 600/24") (not for Ebonite)						5										
Hastelloy C incl. grounding electrodes (only PFA and PTFE)						6										
Platinum incl. grounding electrodes (only PFA and PTFE)						7										
Tantalum incl. grounding electrodes (only PFA and PTFE)						8										
Ceramic coated stainless steel						9							N	0	A	
Ceramic coated Hastelloy C						9							N	0	B	
AISI 316Ti incl. grounding electrodes (only PTFE)						9							N	0	C	
Titanium incl. grounding electrodes (only PTFE)						9							N	0	D	
Transmitter																
Standard sensor for remote transmitter (order transmitter separately)							A									
Ex sensor for remote transmitter (order transmitter separately)							B									
MAG 6000 I, Alu.18 ... 90 V DC, 115 ... 230 V AC							C									
MAG 6000 I Alu. 18 ... 30 V DC, Ex							D									
MAG 6000 I Alu. 115 ... 230 V, Ex							E									
MAG 6000 Polyamide, 11… 30 V DC / 11…24 V AC							H									
MAG 6000, Polyamide, 115 ... 230 V AC							J									
MAG 5000, Polyamide, 11… 30 V DC / 11…24 V AC							K									
MAG 5000, Polyamide, 115 ... 230 V AC							L									
Communication																
No communication, add-on possible								A								
HART								B								
PROFIBUS PA Profile 3 (only MAG 6000/MAG 6000 I)								F								
PROFIBUS DP Profile 3 (not for Ex) (only MAG 6000/MAG 6000 I)								G								
Modbus RTU/RS 485 (not for Ex) (only MAG 6000/MAG 6000 I)								E								
FOUNDATION Fieldbus H1 (only MAG 6000/MAG 6000 I)								J								

© Siemens 2020

Selection and ordering data

	Article No.	
Sensor SITRANS FM MAG 3100	**7ME6310-** ■■■■■ - ■■■■	Ord. code ■■■
Cable glands/terminal box		
Metric: Polyamide terminal box or MAG 6000 I compact	**1**	
½" NPT: Polyamide terminal box or MAG 6000 I compact	**2**	
Metric: Stainless steel terminal box	**3**	
½" NPT: Stainless terminal box	**4**	

Additional information Please add "**-Z**" to Article No. and specify Order code(s) and plain text.	Order code
Certificates	
• Pressure test certificate according to EN 10204-3.1	**C01**
• Material certificate according to EN 10204-3.1	**C12**
• Factory certificate according to EN 10204-2.2	**C14**
• Factory certificate according to EN 10204-2.1	**C15**
Special calibration	
• 5-point calibration for DN 15 ... DN 200[1)]	**D01**
• 5-point calibration for DN 250 ... DN 600[1)]	**D02**
• 5-point calibration for DN 700 ... DN 1200[1)]	**D03**
• 10-point calibration for DN 15 ... DN 200[2)]	**D06**
• 10-point calibration for DN 250 ... DN 600[2)]	**D07**
• 10-point calibration for DN 700 ... DN 1200[2)]	**D08**
• Default (2 × 25 % and 2 × 90 %) match-pair calibration for DN 15 ... DN 200	**D11**
• Default (2 × 25 % and 2 × 90 %) match-pair calibration for DN 250 ... DN 600	**D12**
• Default (2 × 25 % and 2 × 90 %) match-pair calibration for DN 700 ... DN 1200	**D13**
• 5-point, matched-pair calibration for DN 15 ... DN 200[1)]	**D15**
• 5-point, matched-pair calibration for DN 250 ... DN 600[1)]	**D16**
• 5-point, matched-pair calibration for DN 700 ... DN 1200[1)]	**D17**
• 10-point, matched-pair calibration for DN 15 ... DN 200[2)]	**D18**
• 10-point, matched-pair calibration for DN 250 ... DN 600[2)]	**D19**
• 10-point, matched-pair calibration for DN 700 ... DN 1200[2)]	**D20**
Terminal blocks	
• Factory mounted terminal blocks	**N02**
Country specific label	
• CRN (Canadian Registration Number)	**H25**
Tag name plate, stainless steel (specify in plain text)	**Y17**
Tag name plate, plastic (self adhesive)	**Y18**
Customer-specific transmitter setting	**Y20**
Factory mounted sensor cables	
• Sensor cables wired (specify Article No. for sensor cables and order cables separately)	**Y40**
• Sensor cables wired and IP68 sealing (specify Article No. for sensor cables and order cables separately)	**Y41**
Additional calibrations	
• Accredited matched-pair calibration acc. to ISO/IEC 17025: 2005	**On request**[3)]
• Customer-specified calibration up to 10 points	**On request**[3)]
• Customer-witnessed calibration Any of above calibration	**On request**[3)]

1) 20 %, 40 %, 60 %, 80 %, 100 % of factory Q_{max}
2) Ascending and descending at 20 %, 40 %, 60 %, 80 %, 100 % of factory Q_{max}
3) Product Variation Request (PVR)

Operating instructions for SITRANS FM MAG 3100

Description	Article No.
• English	**A5E03005599**
• German	**A5E03086288**

All literature is available to download for free, in a range of languages, at
http://www.siemens.com/processinstrumentation/documentation

Accessories

Description	Article No.	
Potting kit for IP68/NEMA 6P sealing of sensor junction box	**FDK-085U0220**	

Please use online Product selector to get latest updates.

Product selector link:
http://www.pia-selector.automation.siemens.com

© Siemens 2020

Selection and ordering data

	Article No.
Sensor SITRANS FM MAG 3100 HT (High Temperature) ↗	**7ME6320-** ■ ■ ■ ■ ■ - ■ ■ ■
↗ Click on the Article No. for the online configuration in the PIA Life Cycle Portal.	
Diameter	
DN 15 (½")	1 V
DN 25 (1")	2 D
DN 40 (1½")	2 R
DN 50 (2")	2 Y
DN 65 (2½")	3 F
DN 80 (3")	3 M
DN 100 (4")	3 T
DN 125 (5")	4 B
DN 150 (6")	4 H
DN 200 (8")	4 P
DN 250 (10")	4 V
DN 300 (12")	5 D
Flange norm and pressure rating	
EN 1092-1	
PN 10 (DN 200 ... 300 (8" ... 12"))	B
PN 16 (DN 65 ... 300 (2½" ... 12"))	C
PN 25 (DN 200 ... 300 (8" ... 12"))	E
PN 40 (DN 15 ... 300 (½" ... 12"))	F
ANSI B16.5	
Class 150 (½" ... 12")	J
Class 300 (½" ... 12")	K
AS	
2129, table E	M
Flange material	
Carbon steel flanges ASTM A 105	1
Stainless steel flanges, AISI 304/1.4301	2
Stainless steel flanges and sensor body, AISI 316L/1.4404, polished	3
Liner material	
PTFE (150 °C (302 °F))	2
PTFE including type E protection rings AISI 316/1.4436 (180 °C (356 °F))	3
PFA (150 °C (302 °F)) (DN 15 ... 150 (½" ... 6"))	7
Electrode material	
AISI 316Ti/1.4571 (not for PFA)	1
Hastelloy C276/2.4819 (PFA liner: Hastelloy C22/2.4602)	2
Platinum	3
Titanium (not for PFA)	4
Tantalum	5
Hastelloy C22/2.4602 incl. grounding electrodes (only PFA)	6
Platinum incl. grounding electrodes (only PFA)	7
Tantalum incl grounding electrodes (only PFA)	8
Transmitter	
Standard sensor for remote transmitter (Order transmitter separately)	A
Ex sensor for remote transmitter (Order transmitter separately)	B
MAG 6000 I, Alu.18 ... 90 V DC, 115 ... 230 V AC	C
MAG 6000 I, Alu. 18 ... 30 V DC, Ex	D
MAG 6000 I, Alu. 115 ... 230 V AC, Ex	E
MAG 6000, Polyamide, 11 ... 30 V DC/11 ... 24 V AC	H
MAG 6000, Polyamide, 115 ... 230 V AC	J
MAG 5000, Polyamide, 11 ... 30 V DC/11 ... 24 V AC	K
MAG 5000, Polyamide, 115 ... 230 V AC	L

	Article No.
Sensor SITRANS FM MAG 3100 HT (High Temperature)	**7ME6320-** ■ ■ ■ ■ ■ - ■ ■ ■
Communication	
No communication, add-on possible	A
HART	B
PROFIBUS PA Profile 3 (only MAG 6000/MAG 6000 I)	F
PROFIBUS DP Profile 3 (only MAG 6000/MAG 6000 I)	G
Modbus RTU/RS 485 (only MAG 6000/MAG 6000 I)	E
FOUNDATION Fieldbus H1 (only MAG 6000/MAG 6000 I)	J
Cable glands/terminal box	
Metric: Polyamide terminal box (max. 150 °C (302 °F)) or MAG 6000 I compact	1
½" NPT: Polyamide terminal box (max. 150 °C (302 °F)) or MAG 6000 I compact	2
Metric: Stainless steel terminal box	3
½" NPT: Stainless steel terminal box	4

Additional information	**Order code**
Please add "**-Z**" to Article No. and specify Order code(s) and plain text.	
Certificates	
• Pressure test certificate according to EN 10204-3.1	**C01**
• Material certificate according to EN 10204-3.1	**C12**
• Factory certificate according to EN 10204-2.2	**C14**
• Factory certificate according to EN 10204-2.1	**C15**
Terminal blocks	
• Factory mounted terminal blocks	**N02**
Country specific label	
• CRN (Canadian Registration Number)	**H25**
Tag name made, stainless steel (specify in plain text)	**Y17**
Tag name plate, plastic (self adhesive)	**Y18**
Customer-specific transmitter setting	**Y20**
Factory mounted sensor cables	
• Sensor cables wired (specify Article No. for sensor cables and order cables separately)	**Y40**
• Sensor cables wired and IP68 sealing (specify Article No. for sensor cables nd order cables separately)	**Y41**
Additional calibrations	
• Matched-pair calibration	**On request**[1)]
• Accredited matched-pair calibration acc. to ISO/IEC 17025: 2005	**On request**[1)]
• Customer-specified calibration up to 10 points	**On request**[1)]
• Customer-witnessed calibration Any of above calibration	**On request**[1)]

[1)] Product Variation Request (PVR).

© Siemens 2020

Selection and ordering data — Article No.

Accessories for MAG 3100 and MAG 3100 HT sensor

Grounding and protection ring - Type C (Stainless steel)[1)]

- Material AISI 304
- For all liners except PTFE and PFA
- 1 pc.

3

Size DN	Nominale pressure PN 6 Article No.	PN 10 Article No.	PN 16 Article No.	PN 25 Article No.	PN 40 Article No.	AS 2129 Table E Article No.
DN 25					FDK:083N8361	FDK:083N8361
DN 40					FDK:083N8362	FDK:083N8362
DN 50					FDK:083N8344	FDK:083N8344
DN 65	FDK:083N8345		FDK:083N8345		FDK:083N8345	FDK:083N8346
DN 80	FDK:083N8347		FDK:083N8347		FDK:083N8347	FDK:083N8347
DN 100	FDK:083N8070		FDK:083N8025		FDK:083N8025	FDK:083N8025
DN 125	FDK:083N8071		FDK:083N8071		FDK:083N8071	FDK:083N8071
DN 150	FDK:083N8072		FDK:083N8008		FDK:083N8073	FDK:083N8008
DN 200	FDK:083N8074	FDK:083N8011	FDK:083N8011	FDK:083N8011	FDK:083N8075	FDK:083N8011
DN 250	FDK:083N8078	FDK:083N8013	FDK:083N8013	FDK:083N8013	FDK:083N8079	FDK:083N8013
DN 300	FDK:083N8080	FDK:083N8012	FDK:083N8012	FDK:083N8081	FDK:083N8082	FDK:083N8012
DN 350	FDK:083N8083	FDK:083N8039	FDK:083N8039	FDK:083N8084	FDK:083N8085	FDK:083N8039
DN 400	FDK:083N8099	FDK:083N8100	FDK:083N8100	FDK:083N8101	FDK:083N8102	FDK:083N8100
DN 450	FDK:083N8103	FDK:083N8103	FDK:083N8104	FDK:083N8104	FDK:083N8105	FDK:083N8104
DN 500	FDK:083N8107	FDK:083N8107	FDK:083N8108	FDK:083N8108	FDK:083N8109	FDK:083N8108
DN 600	FDK:083N8111	FDK:083N8111	FDK:083N8112	FDK:083N8112		FDK:083N8113
DN 700	FDK:083N8300	FDK:083N8294	FDK:083N8294			FDK:083N8372
DN 750						
DN 800	FDK:083N8303	FDK:083N8304	FDK:083N8304			FDK:083N8373
DN 900	FDK:083N8306	FDK:083N8307	FDK:083N8307			FDK:083N8396
DN 1000	FDK:083N8309	FDK:083N8310	FDK:083N8310			FDK:083N8397
DN 1100		FDK:083N8367	FDK:083N8367			FDK:083N8367
DN 1200	FDK:083N8312	FDK:083N8313	FDK:083N8313			FDK:083N8398
DN 1400	FDK:083N8467	FDK:083N8468	FDK:083N8469			
DN 1500	FDK:083N8471	FDK:083N8472	FDK:083N8473			
DN 1600	FDK:083N8475	FDK:083N8476	FDK:083N8477			
DN 1800	FDK:083N8479	FDK:083N8480	FDK:083N8481			
DN 2000	FDK:083N8483	FDK:083N8484	FDK:083N8485			

[1)] Also for MAG 5100 W (7ME6520 > DN 300/12 inch and 7ME6580).

Size Inch	ANSI Class 150 Article No.	Class 300 Article No.	JIS K10 Article No.	JIS K20 Article No.
1“	FDK:083N8361	FDK:083N8361	FDK:083N8361	FDK:083N8361
1½“	FDK:083N8362	FDK:083N8362	FDK:083N8362	FDK:083N8362
2“	FDK:083N8344	FDK:083N8344	FDK:083N8344	FDK:083N8344
2½“	FDK:083N8345	FDK:083N8345	FDK:083N8345	FDK:083N8345
3“	FDK:083N8347	FDK:083N8347	FDK:083N8347	FDK:083N8347
4“	FDK:083N8025	FDK:083N8025	FDK:083N8070	FDK:083N8025
5“	FDK:083N8071	FDK:083N8071	FDK:083N8071	FDK:083N8071
6“	FDK:083N8008	FDK:083N8073	FDK:083N8008	FDK:083N8008
8“	FDK:083N8011	FDK:083N8076	FDK:083N8011	FDK:083N8011
10“	FDK:083N8013	FDK:083N8079	FDK:083N8013	FDK:083N8079
12“	FDK:083N8012	FDK:083N8082	FDK:083N8012	FDK:083N8081
14“	FDK:083N8039	FDK:083N8085	FDK:083N8083	FDK:083N8039
16“	FDK:083N8100	FDK:083N8102	FDK:083N8100	FDK:083N8101
18“	FDK:083N8104	FDK:083N8106	FDK:083N8103	FDK:083N8104
20“	FDK:083N8107	FDK:083N8110	FDK:083N8107	FDK:083N8108
24“	FDK:083N8113	FDK:083N8114	FDK:083N8111	FDK:083N8112

Size Inch	AWWA C-207 Article No.
28“	FDK:083N8302
30“	FDK:083N8366
32“	FDK:083N8305
36“	FDK:083N8308
40“	FDK:083N8311
42“	FDK:083N8394
44“	FDK:083N8395
48“	FDK:083N8314
54“	FDK:083N8470
60“	FDK:083N8474
66“	FDK:083N8478
72“	FDK:083N8482
78“	FDK:083N8486

© Siemens 2020

Selection and ordering data (continued)

Grunding and protection ring - Type E (Stainless steel)

- Material: AISI 316
- For all PTFE liners
- 1 pc. incl. straps and screws

Note:

For MAG 3100 HT High temperature version 7ME6320... for PTFE 180 °C (356 °C) versions - grounding ring type E is included and factory mounted.

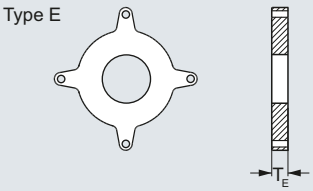

Size	Nominale pressure					
DN	**PN 6**	**PN 10**	**PN 16**	**PN 25**	**PN 40**	**AS2129, Table E**
	Article No.	Article No.	Article No.	Article No.	Article No.	Article No.
DN 15					**FDK:083N8365**	**FDK:083N8365**
DN 25					**FDK:083N8271**	**FDK:083N8272**
DN 40					**FDK:083N8278**	**FDK:083N8280**
DN 50					**FDK:083N8282**	**FDK:083N8281**
DN 65	**FDK:083N8284**		**FDK:083N8285**		**FDK:083N8286**	**FDK:083N8284**
DN 80	**FDK:083N8288**		**FDK:083N8289**		**FDK:083N8290**	**FDK:083N8293**
DN 100	**FDK:083N8116**		**FDK:083N8117**		**FDK:083N8118**	**FDK:083N8117**
DN 125	**FDK:083N8120**		**FDK:083N8121**		**FDK:083N8122**	**FDK:083N8121**
DN 150	**FDK:083N8124**		**FDK:083N8125**		**FDK:083N8126**	**FDK:083N8128**
DN 200	**FDK:083N8129**	**FDK:083N8130**	**FDK:083N8130**	**FDK:083N8131**	**FDK:083N8132**	**FDK:083N8134**
DN 250	**FDK:083N8135**	**FDK:083N8136**	**FDK:083N8137**	**FDK:083N8138**	**FDK:083N8139**	**FDK:083N8143**
DN 300	**FDK:083N8144**	**FDK:083N8144**	**FDK:083N8145**	**FDK:083N8146**	**FDK:083N8147**	**FDK:083N8151**
DN 350	**FDK:083N8152**	**FDK:083N8153**	**FDK:083N8154**	**FDK:083N8155**	**FDK:083N8156**	**FDK:083N8153**
DN 400	**FDK:083N8160**	**FDK:083N8161**	**FDK:083N8162**	**FDK:083N8163**	**FDK:083N8164**	**FDK:083N8161**
DN 450	**FDK:083N8168**	**FDK:083N8169**	**FDK:083N8170**	**FDK:083N8171**	**FDK:083N8172**	**FDK:083N8176**
DN 500	**FDK:083N8177**	**FDK:083N8178**	**FDK:083N8179**	**FDK:083N8180**	**FDK:083N8181**	**FDK:083N8185**
DN 600	**FDK:083N8186**	**FDK:083N8187**	**FDK:083N8188**	**FDK:083N8189**		**A5E32710253**

Size	ANSI			
Inch	**Class 150**	**Class 300**	**JIS K10**	**JIS K20**
	Article No.	Article No.	Article No.	Article No.
½“	**FDK:083N8365**	**FDK:083N8365**		
1“	**FDK:083N8272**	**FDK:083N8272**	**FDK:083N8271**	**FDK:083N8271**
1½“	**FDK:083N8279**	**FDK:083N8279**	**FDK:083N8278**	**FDK:083N8278**
2“	**FDK:083N8283**	**FDK:083N8283**	**FDK:083N8282**	**FDK:083N8282**
2½“	**FDK:083N8287**	**FDK:083N8287**	**FDK:083N8285**	**FDK:083N8285**
3“	**FDK:083N8291**	**FDK:083N8292**	**FDK:083N8288**	**FDK:083N8289**
4“	**FDK:083N8118**	**FDK:083N8119**	**FDK:083N8116**	**FDK:083N8117**
5“	**FDK:083N8122**	**FDK:083N8123**	**FDK:083N8121**	**FDK:083N8122**
6“	**FDK:083N8126**	**FDK:083N8127**	**FDK:083N8125**	**FDK:083N8126**
8“	**FDK:083N8370**	**FDK:083N8133**	**FDK:083N8130**	**FDK:083N8370**
10“	**FDK:083N8140**	**FDK:083N8141**	**FDK:083N8137**	**FDK:083N8139**
12“	**FDK:083N8148**	**FDK:083N8149**	**FDK:083N8144**	**FDK:083N8146**
14“	**FDK:083N8157**	**FDK:083N8158**	**FDK:083N8152**	**FDK:083N8154**
16“	**FDK:083N8165**	**FDK:083N8166**	**FDK:083N8160**	**FDK:083N8165**
18“	**FDK:083N8173**	**FDK:083N8174**	**FDK:083N8169**	**FDK:083N8171**
20“	**FDK:083N8182**	**FDK:083N8183**	**FDK:083N8178**	**FDK:083N8180**
24“	**FDK:083N8190**	**FDK:083N8191**	**A5E32709738**	**A5E32710253**

Note:

For use as protection ring order 2 pcs.
For use as grounding ring order 1 pc.

© Siemens 2020

Selection and ordering data — Article No.

Grounding and protecting ring - Type E (Hastelloy)[1)]

- Material: Hastelloy C276
- For all PTFE liners
- 1 pc. incl. straps and screws

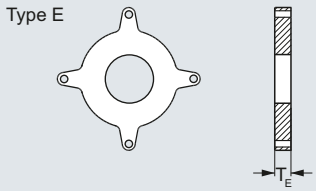

Size DN	Nominale pressure PN 6 Article No.	PN 16 Article No.	PN 40 Article No.	Size Inch	ANSI Class 150 Article No.	Class 300 Article No.
DN 15			**FDK:083N8487**	½“	**FDK:083N8487**	**FDK:083N8487**
DN 25			**FDK:083N8488**	1“	**FDK:083N8489**	**FDK:083N8489**
DN 40			**FDK:083N8490**	1½“	**FDK:083N8491**	**FDK:083N8491**
DN 50			**FDK:083N8492**	2“	**FDK:083N8493**	**FDK:083N8493**
DN 65	**FDK:083N8494**	**FDK:083N8495**	**FDK:083N8496**	2½“	**FDK:083N8497**	**FDK:083N8497**
DN 80	**FDK:083N8498**	**FDK:083N8499**	**FDK:083N8500**	3“	**FDK:083N8501**	**FDK:083N8502**
DN 100	**FDK:083N8503**	**FDK:083N8504**	**FDK:083N8505**	4“	**FDK:083N8506**	**FDK:083N8507**

1) Also for MAG 5100 W (7ME6580).

Grounding ring - Type Flat ring (Stainless steel)

- Material: AISI 316
- For all liners (PTFE max. 150 °C (302 °F))
- 1 pc. incl. straps and screws

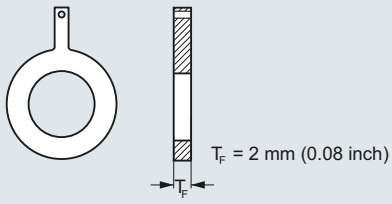

Size DN	Nominale pressure PN 10 Article No.	PN 16 Article No.	PN 40 Article No.	Size Inch	ANSI Class 150 Article No.	Class 300 Article No.
DN 15			**A5E01191968**	½“	**A5E01191969**	
DN 25			**A5E01150880**	1“	**A5E01150022**	**A5E01150378**
DN 40			**A5E01191952**	1½“	**A5E01191961**	
DN 50		**A5E01192006**	**A5E01150918**	2“	**A5E01151121**	**A5E01151194**
DN 65		**A5E01191940**	**A5E01191954**	2½“	**A5E01191962**	
DN 80		**A5E01152876**	**A5E01152876**	3“	**A5E01152910**	**A5E01153422**
DN 100		**A5E01158875**	**A5E01159072**	4“	**A5E01159146**	**A5E01159628**
DN 125		**A5E01191941**	**A5E01191956**	5“	**A5E01191963**	
DN 150		**A5E01191943**	**A5E01191957**	6“	**A5E01191964**	
DN 200	**A5E01191951**	**A5E01191944**	**A5E01191958**	8“	**A5E01191965**	
DN 250	**A5E01191950**	**A5E01191946**	**A5E01191959**	10“	**A5E01191966**	
DN 300	**A5E01191949**	**A5E01191947**	**A5E01191960**	12“	**A5E01191967**	

© Siemens 2020

Selection and ordering data (continued)

Grounding ring - Type Flat ring (Hastelloy)

- Material: Hastelloy C276
- For all liners (PTFE max. 150 °C (302 °F))
- 1 pc. incl. straps and screws

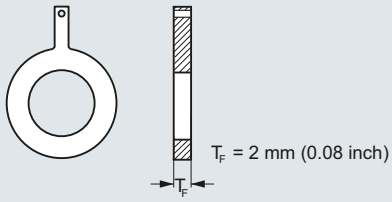

Size	Nominale pressure			Size	ANSI	
DN	**PN 6**	**PN 16**	**PN 40**	**Inch**	**Class 150**	**Class 300**
	Article No.	Article No.	Article No.		Article No.	Article No.
DN 15			**A5E01191981**	½“	**A5E01191989**	
DN 25			**A5E01150882**	1“	**A5E01150028**	**A5E01150379**
DN 40			**A5E01191982**	1½“	**A5E01191990**	
DN 50			**A5E01150922**	2“	**A5E01151124**	**A5E01151197**
DN 65		**A5E01191971**	**A5E01191983**	2½“	**A5E01191991**	
DN 80		**A5E01152889**	**A5E01152889**	3“	**A5E01152913**	**A5E01153424**
DN 100		**A5E01158886**	**A5E01159074**	4“	**A5E01159150**	**A5E01159629**
DN 125		**A5E01191973**	**A5E01191984**	5“	**A5E01191992**	
DN 150		**A5E01191974**	**A5E01191985**	6“	**A5E01191993**	
DN 200	**A5E01191978**	**A5E01191975**	**A5E01191986**	8“	**A5E01191994**	
DN 250	**A5E01191979**	**A5E01191976**	**A5E01191987**	10“	**A5E01191995**	
DN 300	**A5E01191980**	**A5E01191977**	**A5E01191988**	12“	**A5E01191996**	

Grounding ring - Type Flat ring (Tantalum)

- Material: Tantalum
- For all liners (PTFE max. 150 °C (302 °F))
- 1 pc. incl. straps and screws

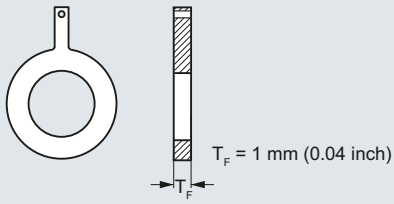

Size	Nominale pressure		Size	ANSI	
DN	**PN 16**	**PN 40**	**Inch**	**Class 150**	**Class 300**
	Article No.	Article No.		Article No.	Article No.
DN 15		**A5E01192007**	½“	**A5E01192010**	
DN 25		**A5E01150883**	1“	**A5E01150030**	**A5E01150381**
DN 40		**A5E01192008**	1½“	**A5E01192011**	
DN 50		**A5E01150926**	2“	**A5E01151129**	**A5E01151199**
DN 65	**A5E01192005**	**A5E01192009**	2½“	**A5E01192012**	
DN 80	**A5E01152890**	**A5E01152890**	3“	**A5E01152916**	**A5E01153427**
DN 100	**A5E01158891**	**A5E01159076**	4“	**A5E01159156**	**A5E01159631**

© Siemens 2020

Dimensional drawings

MAG 3100 and MAG 3100 HT sensor with compact or remote transmitter

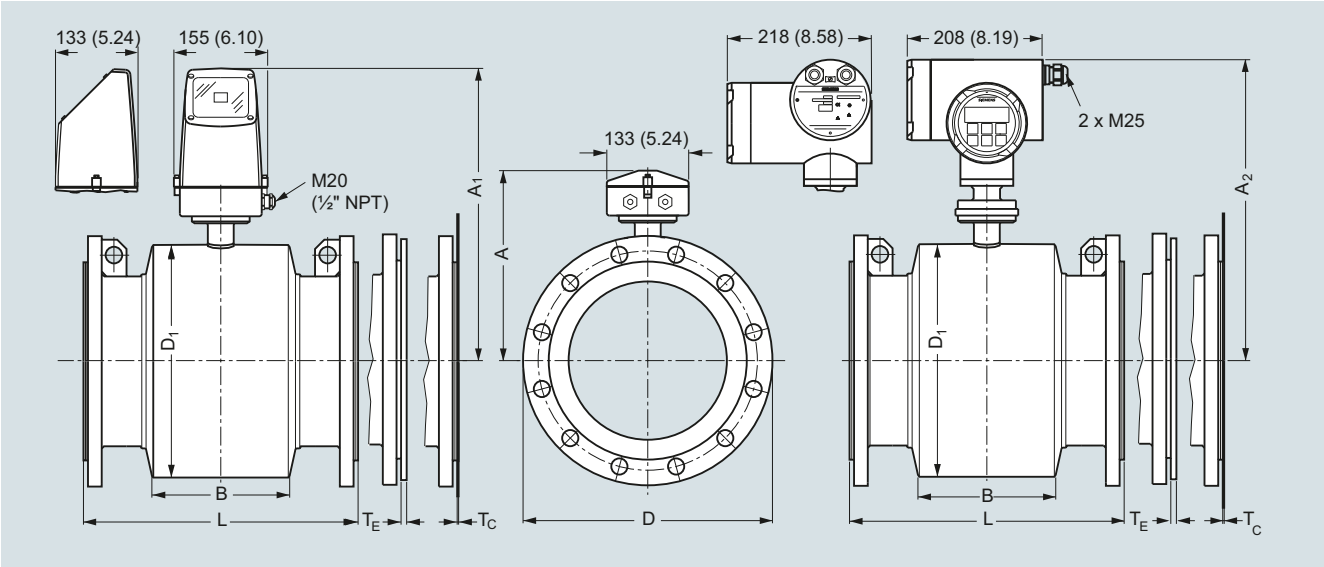

Dimensions in mm (inch)

Metric

DN	A[1)]	A_1	A_2	B	D_1	L[2)3)]							
						EN 1092-1-201						ANSI 16.5	
						PN 6, 10	PN 16/PN 16 non-PED	PN 25	PN 40	PN 63	PN 100	Class 150	Class 300
[mm]	[mm]	[mm]	[mm]	[mm]	[mm]	[mm]	[mm]	[mm]	[mm]	[mm]	[mm]	[mm]	[mm]
15	187	341	338	59	104	-	-	-	200	-	-	200	200
25	187	341	338	59	104	-	-	-	200	-	260	200	200
40	197	351	348	82	124	-	-	-	200	-	280	200	200
50	205	359	356	72	139	-	-	-	200	276	300	200	200
65	212	366	363	72	154	200	200/-	-	200	320	350	200	272
80	222	376	373	72	174	200	200/-	-	272[4)]	323	340	272[4)]	272[4)]
100	242	396	393	85	214	250	250/-	-	250	380	400	250	310
125	255	409	406	85	239	250	250/-	-	250	420	450	250	335
150	276	430	427	85	282	300	300/-	-	300	415	450	300	300
200	304	458	455	137	338	350	350/-	350	350	480	530	350	350
250	332	486	483	157	393	450	450/-	450	450	550	620	450	450
300	357	511	508	157	444	500	500/-	500	500	600	680	500	500
350	362	516	513	270	451	550	550/-	550	550	-	-	550	550
400	387	541	538	270	502	600	600/-	600	600	-	-	600	600
450	418	572	569	310	563	600	600/-	600	600	-	-	600	640
500	443	597	594	350	614	600	600/-	625	680	-	-	600	730
600	494	648	645	320	715	600	600/-	750	800	-	-	600	860
700	544	698	695	450	816	700	875/700	800	-	-	-	800	-
750	571	725	722	556	869	-	-/-	-	-	-	-	950	-
800	606	760	757	560	927	800	1000/800	900	-	-	-	900	-
900	653	807	804	630	1032	900	1125/900	1000	-	-	-	1100	-
1000	704	858	855	670	1136	1000	1250/1000	1100	-	-	-	1100	-
1050	704	858	855	670	1136	-	-/-	-	-	-	-	-	-
1100	755	904	901	770	1238	-	-/-	-	-	-	-	-	-
1200	810	964	961	792	1348	1200	1500/1200	1300	-	-	-	1400	-
1400	925	1079	1076	1000	1574	1400	-/1400	-	-	-	-	-	-
1500	972	1126	1123	1020	1672	1500	-/1500	-	-	-	-	-	-
1600	1025	1179	1176	1130	1774	1600	-/1600	-	-	-	-	-	-
1800	1123	1277	1274	1250	1974	1800	-/1800	-	-	-	-	-	-
2000	1223	1377	1374	1375	2174	2000	-/2000	-	-	-	-	-	-

1) 14.5 mm shorter with stainless steel terminal box (Ex and high temperature version)

2) When grounding rings are used, the thickness of the grounding ring must be added to the built-in length

3) Tolerances on built-in length (PN 6, PN 10, PN 16, PN 25 and PN 40):
DN 15 to DN 200: +0/-3 mm, DN 250 to DN 400: +0/-5 mm, DN 450 to DN 600: +5/-5 mm, DN 700 to DN 2000: +10/-10 mm
Tolerances on built-in length (PN 63 and PN 100): All sizes +8/-8 mm

4) Not according to ISO 20456

© Siemens 2020

Dimensional drawings (continued)

DN	L[1)2)]				T_C[3)]	T_E[3)]	T_F[3)]	Weight[4)]
	AS 2129 E AS 4087 PN 16, 21, 35	AWWA C-207 Class D	JIS K10	JIS K20				
[mm]	[mm]	[mm]	[mm]	[mm]	[mm]	[mm]	[mm]	[kg]
15	200	-	200	200	-	6	2	4
25	200	-	200	200	1.2	6	2	5
40	200	-	200	240	1.2	6	2	8
50	200	-	200	240	1.2	6	2	9
65	200	-	200	272	1.2	6	2	11
80	200 [5)]	-	200[9)]	272[9)]	1.2	6	2	12
100	250	-	250	310	1.2	6	2	16
125	250	-	250	335	1.2	6	2	19
150	300	-	300	300	1.2	6	2	27
200	350	-	350	350	1.2	8	2	40
250	450	-	450	450	1.2	8	2	60
300	500	-	500	500	1.6	8	2	80
350	550	-	550	550	1.6	8	-	110
400	600	-	600	600	1.6	10	-	125
450	600	-	600	640	1.6	10	-	175
500	600[6)]	-	600	680	1.6	10	-	200
600	600[7)]	-	600	800	1.6	10	-	287
700	700[8)]	700	-	-	2.0	-	-	330
750	750[8)]	750	-	-	2.0	-	-	360
800	800[8)]	800	-	-	2.0	-	-	450
900	900[8)]	900	-	-	2.0	-	-	530
1000	1000[8)]	1000	-	-	2.0	-	-	660
1050	-	1000	-	-	2.0	-	-	660
1100	-	1100	-	-	2.0	-	-	1140
1200	1200[6)]	1200	-	-	2.0	-	-	1180
1400	-	1400	-	-	2.0	-	-	1600
1500	-	1500	-	-	3.0	-	-	2460
1600	-	1600	-	-	3.0	-	-	2525
1800	-	1800	-	-	3.0	-	-	2930
2000	-	2000	-	-	3.0	-	-	3665

1) When grounding rings are used, the thickness of the grounding ring must be added to the built-in length.

2) Tolerances on built-in length (PN 6, PN 10, PN 16, PN 25 and PN 40):
DN 15 to DN 200: +0/-3 mm, DN 250 to DN 400: +0/-5 mm, DN 450 to DN 600: +5/-5 mm, DN 700 to DN 2000: +10/-10 mm
Tolerances on built-in length (PN 63 and PN 100): All sizes +8/-8 mm

3) T_C = Protection ring type C , T_E = Grounding ring type E (included and factory mounted for 180 °C PTFE liner), T_F = Grounding ring Type Flat ring

4) Weights are approx. (for PN 16) without transmitter.

5) PN 35 DN 80 = 272 mm (not according to ISO 20456)

6) PN 35 DN 500 = 680 mm

7) PN 35 DN 600 = 750 mm

8) Not AS 4087 PN 21 or PN 35

9) Not according to ISO 20456

D = Outside diameter of flange, see flange tables

© Siemens 2020

Dimensional drawings (continued)

Imperial

DN	A[1]	A_1	A_2	B	D_1	L[2)3)]								
						EN 1092-1-201						ANSI 16.5/ASME B16.47[4]		
						PN 6, 10	PN 16/PN 16 non-PED	PN 25	PN 40	PN 63	PN 100	Class 150	Class 300	Class 600
[inch]	[inch]	[inch]	[inch]	[inch]	[inch]	[inch]	[inch]	[inch]	[inch]	[inch]	[inch]	[inch]	[inch]	[inch]
½	7.36	13.31	13.25	2.32	4.09	-	-	-	7.87	-	-	7.87	7.87	-
1	7.36	13.31	13.25	2.32	4.09	-	-	-	7.87	-	10.24	7.87	7.87	11.02
1½	7.76	13.70	13.64	3.23	4.88	-	-	-	7.87	-	11.02	7.87	7.87	12.60
2	8.07	14.01	13.95	2.83	5.47	-	-	-	7.87	10.87	11.81	7.87	7.87	12.99
2½	8.35	14.29	14.23	2.83	6.06	7.87	7.87/-	-	7.87	12.60	13.78	7.87	10.71	on request
3	8.74	14.69	14.63	2.83	6.85	7.87	7.87/-	-	10.71[5]	12.72	13.39	10.71[5]	10.71[5]	13.78
4	9.53	15.47	15.41	3.35	8.43	9.84	9.84/-	-	9.84	14.96	-	9.84	12.20	18.11
5	10.04	15.98	15.92	3.35	9.41	9.84	9.84/-	-	9.84	16.54	-	9.84	13.10	18.90
6	10.87	16.81	16.75	5.39	11.10	11.81	11.81/-	-	11.81	16.34	-	11.81	11.81	19.68
8	11.97	17.91	17.85	5.39	13.31	13.78	13.78/-	13.78	13.78	18.90	-	13.78	13.78	23.62
10	13.07	19.02	18.96	6.18	15.47	17.72	17.72/-	17.72	17.72	-	-	17.72	17.72	23.62
12	14.05	20.00	19.94	6.18	17.48	19.69	19.69/-	19.69	19.69	-	-	19.69	19.69	27.56
14	14.25	20.20	20.14	10.63	17.76	21.65	21.65/-	21.65	21.65	-	-	21.65	21.65	-
16	15.24	21.18	21.12	10.63	19.76	23.62	23.62/-	23.62	23.62	-	-	23.62	23.62	-
18	16.45	22.40	22.34	12.20	22.16	23.62	23.62/-	23.62	23.62	-	-	23.62	23.62	-
20	17.44	23.39	23.33	13.78	24.17	23.62	23.62/-	24.61	26.77	-	-	23.62	28.70	-
24	19.45	25.39	25.33	12.59	28.15	23.62	23.62/-	29.53	31.50	-	-	23.62	33.80	-
28	21.42	27.36	27.30	17.72	32.13	27.56	34.45/27.56	31.50	-	-	-	31.50	-	-
30	22.48	28.43	28.37	21.89	34.21	-	-/-	-	-	-	-	37.41	-	-
32	23.86	29.80	29.74	22.05	36.50	31.50	39.37/31.50	35.44	-	-	-	35.44	-	-
36	25.71	31.65	31.59	24.80	40.63	35.43	44.29/35.43	39.38	-	-	-	43.32	-	-
40	27.72	33.85	33.79	26.38	44.72	39.37	49.21/39.37	43.32	-	-	-	43.32	-	-
42	27.72	33.85	33.79	26.38	44.72	-	-/-	-	-	-	-	-	-	-
44	29.72	35.67	35.61	30.31	48.74	-	-/-	-	-	-	-	-	-	-
48	31.89	37.83	37.77	31.18	53.07	47.24	59.06/47.24	51.19	-	-	-	55.12	-	-
54	36.42	42.36	42.30	39.37	61.97	55.12	-/55.12	-	-	-	-	-	-	-
60	38.27	44.21	44.15	40.15	65.83	59.06	59.06/59.06	-	-	-	-	-	-	-
66	40.35	46.30	46.24	44.49	69.84	62.99	-/62.99	-	-	-	-	-	-	-
72	44.21	50.16	50.10	49.21	77.72	70.87	-/70.87	-	-	-	-	-	-	-
78	48.15	54.09	54.03	54.13	85.59	78.74	-/78.74	-	-	-	-	-	-	-

1) 0.571 inch shorter with stainless steel terminal box (Ex and high temperature version)

2) When grounding rings are used, the thickness of the grounding ring must be added to the built-in length

3) Tolerances on built-in length (PN 6, PN 10, PN 16, PN 25 and PN 40):
½" to 8": +0/-0.12", 10" to DN 16" : +0/-0.20", 18" to DN 24" : +0.20/-0.20", 28" to DN 78" : +0.39/-0.39"
Tolerances on built-in length (PN 63 and PN 100): All sizes +0.31"/-0.31"

4) ANSI 16.5 for DN ≤ 24"; ASME B16.47 for DN ≥ 28"

5) Not according to ISO 20456

© Siemens 2020

Dimensional drawings (continued)

DN	L[1)2)]				T_C[3)]	T_E[3)]	T_F[3)]	Weight[4)]
	AS 2129 E AS 4087 PN 16, 21, 35	AWWA C-207 Class D	JIS K10	JIS K20				
[inch]	[inch]	[inch]	[inch]	[inch]	[inch]	[inch]	[inch]	[lb]
½	7.87	-	7.87	7.87	-	0.24	0.08	9
1	7.87	-	7.87	7.87	0.05	0.24	0.08	11
1½	7.87	-	7.87	9.44	0.05	0.24	0.08	17
2	7.87	-	7.87	9.44	0.05	0.24	0.08	20
2½	7.87	-	7.87	10.70	0.05	0.24	0.08	24
3	7.875)	-	7.878)	10.709)	0.05	0.24	0.08	26
4	9.84	-	9.84	12.20	0.05	0.24	0.08	35
5	9.84	-	9.84	13.18	0.05	0.24	0.08	42
6	11.81	-	11.81	11.81	0.05	0.24	0.08	60
8	13.78	-	13.77	13.77	0.05	0.31	0.08	88
10	17.72	-	17.71	17.71	0.05	0.31	0.08	132
12	19.69	-	19.68	19.68	0.06	0.31	0.08	176
14	21.65	-	21.65	21.65	0.06	0.31	-	242
16	23.62	-	23.62	23.62	0.06	0.39	-	275
18	23.62	-	23.62	25.19	0.06	0.39	-	385
20	23.626)	-	23.62	26.77	0.06	0.39	-	440
24	23.627)	-	23.62	31.49	0.06	0.39	-	633
28	27.568)	27.56	-	-	0.08	-	-	728
30	29.538)	29.52	-	-	0.08	-	-	794
32	31.807)	31.50	-	-	0.08	-	-	992
36	35.438)	35.43	-	-	0.08	-	-	1168
40	39.378)	39.37	-	-	0.08	-	-	1455
42	-	39.37	-	-	0.08	-	-	1455
44	-	43.31	-	-	0.08	-	-	2513
48	47.248)	47.24	-	-	0.08	-	-	2601
54	-	55.12	-	-	0.12	-	-	3528
60	-	59.06	-	-	0.12	-	-	5423
66	-	63.00	-	-	0.12	-	-	5566
72	-	70.87	-	-	0.12	-	-	6460
78	-	78.74	-	-	0.12	-	-	8080

1) When grounding rings are used, the thickness of the grounding ring must be added to the built-in length.

2) Tolerances on built-in length (PN 6, PN 10, PN 16, PN 25 and PN 40):
½" to 8": +0/-0.12", 10" to 16" : +0/-0.20", 18" to 24" : +0.2/-0.2", 28" to 78" : +0.39/-0.39"
Tolerances on built-in length (PN 63 and PN 100): All sizes +0.31"/-0.31"

3) T_C = Protection ring type C , T_E = Grounding ring type E (included and factory mounted for 180 °C PTFE liner), T_F = Grounding ring Type Flat ring

4) Weights are for ANSI 150 without transmitter.

5) PN 35 DN 80 = 10.07 inch

6) PN 35 DN 500 = 26.77 inch

7) PN 35 DN 600 = 2.53 inch

8) Not AS 4087 PN 21 or PN 35

9) Not according to ISO 20456

D = Outside diameter of flange, see flange tables

© Siemens 2020

Overview

The SITRANS FM MAG 3100 P is designed to meet the most common specifications within chemical and process industries.

Benefits

- DN 15 to DN 300 (½" to 12")
- Included in Quick Ship Program (delivery time see PIA LCP)
- Most used flowmeter in the chemical and process industries with PTFE/PFA liner and Hastelloy electrodes
- Excellent chemical resistance
- Full scope of global approvals for hazardous areas:
  - ATEX, FM, CSA, IEcEx
  - 24 V and 115/230 V Ex compact and remote
  - intrinsically safe ia analog output
- Comprehensive self-diagnostic for error indication and error logging
- Fully welded construction provides a ruggedness that suits the toughest applications and environments.
- Easy commissioning, the SENSORPROM unit automatically updates settings.
- MAG 6000 I full NAMUR compliance
  - compliant with NE 21, NE 32, NE 43, NE 53 and NE70

Application

The main applications of the SITRANS FM electromagnetic flow sensors can be found in the following fields:

- Chemical industry
- Process industry
- Pulp and paper
- Industrial waste water

Design

- Compact or remote mounting possible
- Easy “plug & play“ field changeability of transmitter
- High temperature sensor for applications with temperatures up to 150 °C (302 °F)
- Meets EEC directives: PED, 2014/68/EU pressure directive for EN 1092-1 flanges
- Build-in length according to ISO 20456
- Onsite or factory upgrade to IP68/NEMA 6P of a standard sensor.

Mode of operation

The flow measuring principle is based on Faraday’s law of electromagnetic induction according to which the sensor converts the flow into an electrical voltage proportional to the velocity of the flow.

© Siemens 2020

Integration

The complete flowmeter consists of a flow sensor and an associated transmitter MAG 5000, 6000 and 6000 I.

The flexible communication concept USM II simplifies integration and update to a variety of fieldbus systems such as HART, FOUNDATION Fieldbus H1, DeviceNet, PROFIBUS DP and PA, Modbus RTU/RS 485.

Pressure-temperature curve to EN (DIN) flanges, material A 105 carbon steel

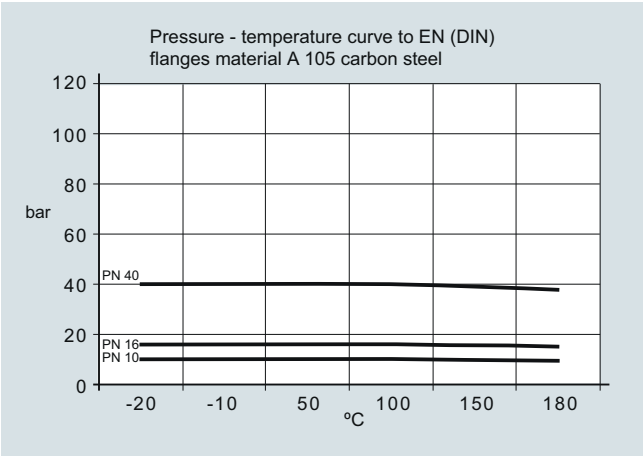

Pressure-temperature curve to ANSI B16.5 flanges

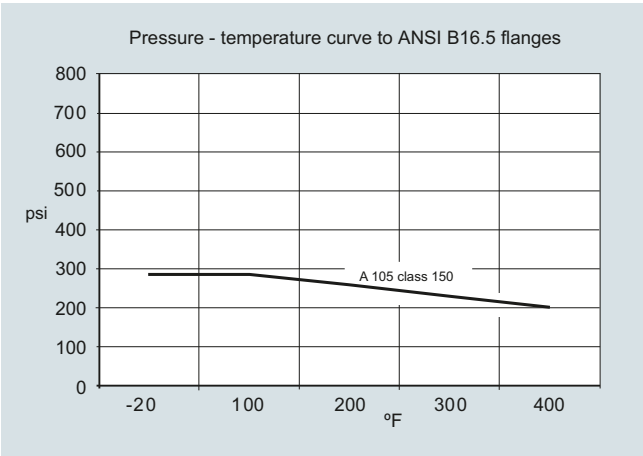

Note: The pressure-temperature curves only assist in the selection of a system. No responsibility is taken for the correctness of the information. For exact data please refer to the PED requirements. For further information on the PED standard and requirements, see Pressure Equipment Directive in Appendix (chapter 10).

© Siemens 2020

Technical specifications

Product characteristic	Chemical and process industry-oriented (Included in Quick Ship Program
Nominal size	• PTFE: DN 15 … 300 (½" … 12") • PFA: DN 15 … 150 (½" … 6")
Measuring principle	Electromagnetic induction
Excitation frequency (Mains supply: 50 Hz/60 Hz)	• DN 15 … 65 (½" … 2½"): 12.5 Hz/15 Hz • DN 80 … 150 (3" … 6"): 6.25 Hz/7.5 Hz • DN 200 … 300 (8" … 12"): 3.125 Hz/3.75 Hz
Process connection	
Flanges	EN 1092-1, raised face[1] (EN 1092-1, DIN 2501 & BS 4504 have the same mating dimensions) • DN 15 … 50 (½" … 2"): PN 40 (580 psi) • DN 65 … 300 (2½" … 12"): PN 16 (232 psi) • DN 200 … 300 (8" … 12"): PN 10 (145 psi) ANSI B16.5 (~BS 1560), raised face • ½" … 12": Class 150 (20 bar (290 psi))
Rated operation conditions	
Ambient temperature (conditions also dependent on liner characteristiques)	
• Standard Sensor	-40 … +100 °C (-40 … +212 °F)
• Ex sensor	-20 … +60 °C (-4 … +140 °F)
• Compact with transmitter	
- MAG 5000/6000	-20 … +60 °C (-4 … +140 °F)
- MAG 6000 I	-20 … +60 °C (-4 … +140 °F)
- MAG 6000 I Ex	-20 … +60 °C (-4 … +140 °F)
Operating pressure [abs. bar] (maximum operating pressure decreases with increasing operating temperature and with stainless steel flanges)	• PTFE Teflon - DN 15 … 300 (½" … 12"): 0.3 … 40 bar (4 … 580 psi) • PFA - DN 15 … 150 (½" … 6"): Vacuum 0.02 … 50 bar (0.29 … 725 psi)
Enclosure rating	IP67 to EN 60529/NEMA 4X/6, 1 mH_2O for 30 min Option: IP68 to EN 60529/NEMA 6P, 10 mH_2O cont. (not for Ex)
Pressure drop at 3 m/s	As straight pipe
Test pressure	1.5 x PN (where applicable)
Mechanical load (Vibration)	• 18 … 1000 Hz random in x, y, z, directions for 2 hours according to EN 60068-2-36 • Sensor: 3.17 g RMS • Sensor with compact MAG 5000/6000 mounted transmitter: 3.17 g RMS • Sensor with compact MAG 6000 I/6000 I Ex mounted transmitter: 1.14 g RMS
Temperature of medium	• PTFE -20 … +130 °C (-4 … +266 °F) • PFA -20 … +150 °C (-4 … +302 °F)
EMC	2014/30/EU

Design	
Weight	See dimensional drawings
Flange and housing material	Carbon steel ASTM A 105, with corrosion resistant coating of category C4 according to ISO 12944-2
Measuring pipe material	Stainless steel AISI 304/1.4301
Electrode material	PTFE: Hastelloy C276/2.4819, Platinum, Tantalum PFA: Hastelloy C22/2.4602
Grounding electrode material	Optional in Hastelloy C22/2.602
Terminal box (remote version only)	• Standard fibre glass reinforced polyamide • Option Stainless steel AISI 316/1.4436 • Ex sensor: Stainless steel AISI 316/1.4436
Cable entries	• Remote installation 2 x M20 or 2 x ½" NPT • Compact installation - MAG 5000/MAG 6000: 4 x M20 or 4 x ½" NPT - MAG 6000 I: 2 x M25 or 2 x ½" NPT (for supply/output) - MAG 6000 I Ex de: 2 x M25 or 2 x ½" NPT (for supply/output)
Certificates and approvals	
Calibration	
• Default calibration	Zero-point, 2 x 25 % and 2 x 90 %
Hazardous areas	
• Ex-sensor in compact or remote version with MAG 6000 I Ex	• ATEX, FM, CSA, IECEx, EAC Ex, NEPSI - Zone 1 Ex d e ia IIC T6 Gb • ATEX, FM, CSA, IECEx - Zone 21 Ex tD A21 IP67 • FM - XP IS Class I Div. 1 Groups A, B, C, D[2] - DIP Class II+III Div. 1 Groups E, F, G[2]
• Standard sensor with/without MAG 5000/6000/6000 I	• FM - NI Class I Div. 2 Groups A, B, C, D - NI Class I Zone 2 Groups IIC
Pressure equipment	PED, CRN
Others	• EAC (Russia, Belarus, Kazakhstan) • KCC (South Korea)

[1] DN ≤ 600 type 01 (SORF); DN > 600 type 11 (WNRF)
[2] In compact version only.

© Siemens 2020

Technical specifications (continued)

Available Options for the SITRANS MAG 3100 P

The MAG 3100P is designed to meet the most common specifications within chemical and process industries. Therefore not all options are available. If you miss a few options please check out or product MAG 3100 which is covering many more options.

Available Options for Liner PTFE with Platinum electrodes

Diameter		Connection			
MAG 3100 P	**Order code**	**EN 1092-1, PN 10**	**EN 1092-1, PN 16**	**EN 1092-1, PN 40**	**AISI B 16.5, class 150**
DN 15, ½"	**1V**			•	
DN 25, 1"	**2D**			•	•
DN 40, 1 ½"	**2R**			•	
DN 50, 2"	**2Y**			•	•
DN 65, 2 ½"	**3F**				
DN 80, 3"	**3M**		•		
DN 100, 4"	**3T**		•		
DN 125, 5"	**4B**		•		
DN 150, 6"	**4H**		•		
DN 200, 8"	**4P**				
DN 250, 10"	**4V**				
DN 300, 12"	**5D**				

Available Options for Liner PTFE with Tantalum electrodes

Diameter		Connection			
MAG 3100 P	**Order code**	**EN 1092-1, PN 10**	**EN 1092-1, PN 16**	**EN 1092-1, PN 40**	**AISI B 16.5, class 150**
DN 15, ½"	**1V**			•	
DN 25, 1"	**2D**			•	•
DN 40, 1 ½"	**2R**			•	
DN 50, 2"	**2Y**			•	•
DN 65, 2 ½"	**3F**		•		
DN 80, 3"	**3M**		•		•
DN 100, 4"	**3T**		•		•
DN 125, 5"	**4B**				
DN 150, 6"	**4H**		•		
DN 200, 8"	**4P**		•		
DN 250, 10"	**4V**		•		
DN 300, 12"	**5D**				

Available Options for Liner PTFE with Hastelloy C electrodes incl. grounding electrodes

Diameter		Connection			
MAG 3100 P	**Order code**	**EN 1092-1, PN 10**	**EN 1092-1, PN 16**	**EN 1092-1, PN 40**	**AISI B 16.5, class 150**
DN 15, ½"	**1V**			•	
DN 25, 1"	**2D**			•	•
DN 40, 1 ½"	**2R**			•	
DN 50, 2"	**2Y**			•	•
DN 65, 2 ½"	**3F**		•		
DN 80, 3"	**3M**		•		•
DN 100, 4"	**3T**		•		•
DN 125, 5"	**4B**				
DN 150, 6"	**4H**		•		•
DN 200, 8"	**4P**				•
DN 250, 10"	**4V**				•
DN 300, 12"	**5D**				

© Siemens 2020

Selection and ordering data

	Article No.									
Sensor SITRANS FM MAG 3100 P (Short delivery time) ↗	**7ME6340-**									
↗ Click on the Article No. for the online configuration in the PIA Life Cycle Portal.	■	■	■	■	■	-	■	■	■	■
Diameter										
DN 15 (½")	**1**	**V**								
DN 25 (1")	**2**	**D**								
DN 40 (1½")	**2**	**R**								
DN 50 (2")	**2**	**Y**								
DN 65 (2½")	**3**	**F**								
DN 80 (3")	**3**	**M**								
DN 100 (4")	**3**	**T**								
DN 125 (5")	**4**	**B**								
DN 150 (6")	**4**	**H**								
DN 200 (8")	**4**	**P**								
DN 250 (10")	**4**	**V**								
DN 300 (12")	**5**	**D**								
Flange norm and pressure rating										
EN 1092-1										
PN 10 (DN 200 ... 300 (8" … 12"))			**B**							
PN 16 (DN 65 ... 300 (2½" … 12"))			**C**							
PN 40 (DN 15 ... 50 (½" … 2")			**F**							
ANSI B16.5										
Class 150 (½" ... 12")			**J**							
Flange material										
Carbon steel flanges ASTM A 105				**1**						
Liner material										
PTFE (150 °C (302 °F))					**3**					
PFA (150 °C (302 °F)) (DN 15 ... 150 (½" ... 6"))					**7**					
Electrode material										
Hastelloy C							**2**			
Platinum							**3**			
Tantalum							**5**			
Hastelloy C incl. grounding electrodes							**6**			
Transmitter										
Standard sensor for remote transmitter (Order transmitter separately)								**A**		
Ex sensor for remote transmitter (Order transmitter separately)								**B**		
MAG 6000 I, Aluminum, 18 ... 90 V DC, 115 ... 230 V AC								**C**		
MAG 6000 I, Aluminum, 18 ... 30 V DC, Ex								**D**		
MAG 6000 I, Aluminum, 115 ... 230 V AC, Ex								**E**		
MAG 6000, Polyamide, 11 … 30 V DC/11 ... 24 V AC								**H**		
MAG 6000, Polyamide, 115 ... 230 V AC								**J**		
MAG 5000, Polyamide, 11 ... 30 V DC/11 ... 24 V AC								**K**		
MAG 5000, Polyamide, 115 ... 230 V AC								**L**		
Communication										
No communication, add-on possible									**A**	
HART									**B**	
PROFIBUS PA Profile 3 (only MAG 6000/MAG 6000 I)									**F**	
PROFIBUS DP Profile 3 (not for Ex) (only MAG 6000/MAG 6000 I)									**G**	
Modbus RTU/RS 485 (not for Ex) (only MAG 6000/MAG 6000 I)									**E**	
FOUNDATION Fieldbus H1 (only MAG 6000/6000 I)									**J**	
Cable glands/terminal box										
Metric: Polyamide terminal box or MAG 6000 I compact										**1**
½" NPT: Polyamide terminal box or MAG 6000 I compact										**2**
Metric: Stainless steel terminal box										**3**
½" NPT: Stainless steel terminal box										**4**

	Order code
Additional information	
Please add "**-Z**" to Article No. and specify Order code(s) and plain text.	
Certificates	
• Factory certificate according to EN 10204-2.2	**C14**
• Factory certificate according to EN 10204-2.1	**C15**
Terminal blocks	
• Factory mounted terminal blocks	**N02**
Country specific label	
• CRN (Canadian Registration Number)	**H25**
Tag name plate, stainless steel (specify in plain text)	**Y17**
Tag name plate, plastic (self adhesive)	**Y18**
Customer-specific transmitter setting	**Y20**
Factory mounted sensor cables	
• Sensor cables wired (specify Article No. for sensor cables and order cables separately)	**Y40**
• Sensor cables wired and IP68 sealing (specify Article No. for sensor cables nd order cables separately)	**Y41**
Additional calibrations	
• Matched-pair calibration	**On request**[1)]
• Accredited matched-pair calibration acc. to ISO/IEC 17025: 2005	**On request**[1)]
• Customer-specified calibration up to 10 points	**On request**[1)]
• Customer-witnessed calibration Any of above calibration	**On request**[1)]

[1)] Product Variation Request (PVR).

Operating instructions for SITRANS FM MAG 3100 P

Description	Article No.
• English	**A5E03005599**
• German	**A5E03086288**

All literature is available to download for free, in a range of languages, at
http://www.siemens.com/processinstrumentation/documentation

Accessories

Description	Article No.	
Potting kit for IP68/NEMA 6P sealing of sensor junction box	**FDK-085U0220**	

Please use online Product selector to get latest updates.

Product selector link:
http://www.pia-selector.automation.siemens.com

© Siemens 2020

Selection and ordering data (continued)

Accessories for MAG 3100 P sensor

Grounding and protection ring - Type E (Stainless steel)

- Material: AISI 316
- For liner PTFE
- 1 pc. incl. straps and screws

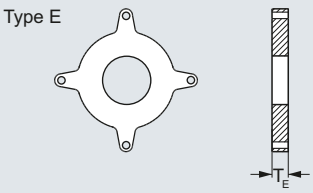

Size	Nominale pressure			Size	ANSI[1)]
DN	**PN 10**	**PN 16**	**PN 40**	**Inch**	**Class 150**
	Article No.	Article No.	Article No.		Article No.
DN 15			**FDK:083N8365**	½“	**FDK:083N8365**
DN 25			**FDK:083N8271**	1“	**FDK:083N8272**
DN 40			**FDK:083N8278**	1½“	**FDK:083N8279**
DN 50			**FDK:083N8282**	2“	**FDK:083N8283**
DN 65		**FDK:083N8285**		2½“	**FDK:083N8287**
DN 80		**FDK:083N8289**		3“	**FDK:083N8291**
DN 100		**FDK:083N8117**		4“	**FDK:083N8118**
DN 125		**FDK:083N8121**		5“	**FDK:083N8122**
DN 150		**FDK:083N8125**		6“	**FDK:083N8126**
DN 200	**FDK:083N8130**	**FDK:083N8130**		8“	**FDK:083N8370**
DN 250	**FDK:083N8136**	**FDK:083N8137**		10“	**FDK:083N8140**
DN 300	**FDK:083N8144**	**FDK:083N8145**		12“	**FDK:083N8148**

For use as protection ring order 2 pcs.
For use as grounding ring order 1 pc.

Grounding and protection ring - Type E (Hastelloy)

- Material: Hastelloy C276
- For liner PTFE
- 1 pc. incl. straps and screws

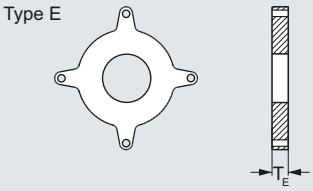

Size	Nominale pressure		Size	ANSI[1)]
DN	**PN 16**	**PN 40**	**Inch**	**Class 150**
	Article No.	Article No.		Article No.
DN 15		**FDK:083N8487**	½“	**FDK:083N8487**
DN 25		**FDK:083N8488**	1“	**FDK:083N8489**
DN 40		**FDK:083N8490**	1½“	**FDK:083N8491**
DN 50		**FDK:083N8492**	2“	**FDK:083N8493**
DN 65	**FDK:083N8495**		2½“	**FDK:083N8497**
DN 80	**FDK:083N8499**		3“	**FDK:083N8501**
DN 100	**FDK:083N8504**		4“	**FDK:083N8506**

[1)] For dimensions of MAG 3100 P see Dimensional drawings.

© Siemens 2020

Selection and ordering data (continued)

Grounding ring - Type Flat ring (Stainless steel)

- Material: AISI 316
- For liner PTFE and PFA
- 1 pc. incl. straps and screws

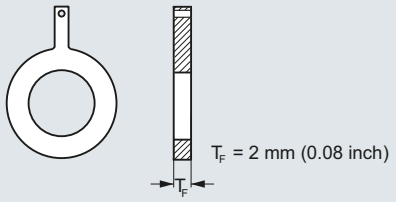

Size	Nominale pressure			Size	ANSI[1)]
DN	**PN 10**	**PN 16**	**PN 40**	**Inch**	**Class 150**
	Article No.	Article No.	Article No.		Article No.
DN 15			**A5E01191968**	½“	**A5E01191969**
DN 25			**A5E01150880**	1“	**A5E01150022**
DN 40			**A5E01191952**	1½“	**A5E01191961**
DN 50			**A5E01150918**	2“	**A5E01151121**
DN 65		**A5E01191940**		2½“	**A5E01191962**
DN 80		**A5E01152876**		3“	**A5E01152910**
DN 100		**A5E01158875**		4“	**A5E01159146**
DN 125		**A5E01191941**		5“	**A5E01191963**
DN 150		**A5E01191943**		6“	**A5E01191964**
DN 200	**A5E01191951**	**A5E01191944**		8“	**A5E01191965**
DN 250	**A5E01191950**	**A5E01191946**		10“	**A5E01191966**
DN 300	**A5E01191949**	**A5E01191947**		12“	**A5E01191967**

1) For dimensions of MAG 3100 P see Dimensionl drawings.

Grounding ring - Type Flat ring (Hastelloy)

- Material: Hastelloy C276
- For liner PTFE and PFA
- 1 pc. incl. straps and screws

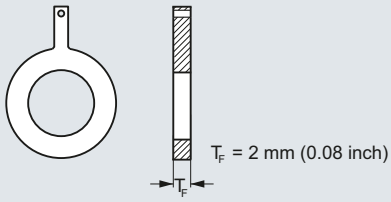

Size	Nominale pressure			Size	ANSI[1)]
DN	**PN 10**	**PN 16**	**PN 40**	**Inch**	**Class 150**
	Article No.	Article No.	Article No.		Article No.
DN 15			**A5E01191981**	½“	**A5E01191989**
DN 25			**A5E01150882**	1“	**A5E01150028**
DN 40			**A5E01191982**	1½“	**A5E01191990**
DN 50			**A5E01150922**	2“	**A5E01151124**
DN 65		**A5E01191971**		2½“	**A5E01191991**
DN 80		**A5E01152889**		3“	**A5E01152913**
DN 100		**A5E01158886**		4“	**A5E01159150**
DN 125		**A5E01191973**		5“	**A5E01191992**
DN 150		**A5E01191974**		6“	**A5E01191993**
DN 200	**A5E01191978**	**A5E01191975**		8“	**A5E01191994**
DN 250	**A5E01191979**	**A5E01191976**		10“	**A5E01191995**
DN 300	**A5E01191980**	**A5E01191977**		12“	**A5E01191996**

1) For dimensions of MAG 3100 P see Dimensional drawings.

© Siemens 2020

Dimensional drawings

MAG 3100 P sensor with compact or remote transmitter

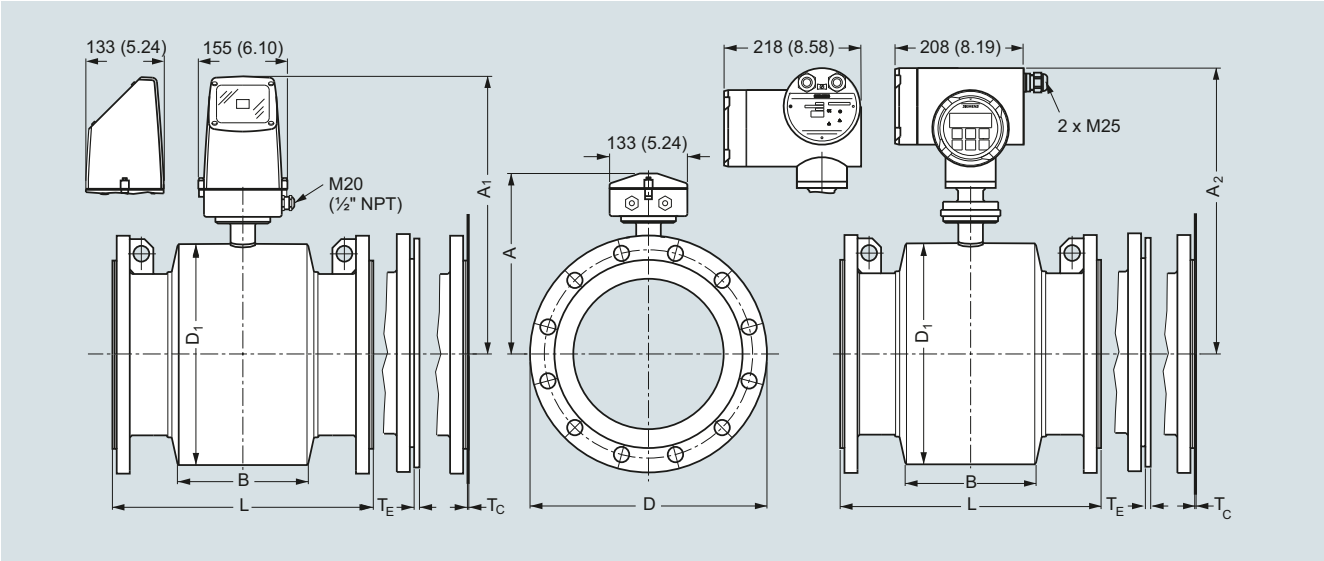

Dimensions in mm (inch)

Metric

DN	A[1]	A_1	A_2	B	D1	L[2] EN 1092-1-201 PN 10	L[2] EN 1092-1-201 PN 16	L[2] EN 1092-1-201 PN 40	L[2] ANSI 16.5 Class 150	T_E[3]	T_F[3]	Weight[4]
[mm]	[mm]	[mm]	[mm]	[mm]	[mm]	[mm]	[mm]	[mm]	[mm]	[mm]	[mm]	[kg]
15	187	341	338	59	104	-	-	200	200	6	2	4
25	187	341	338	59	104	-	-	200	200	6	2	5
40	197	351	348	82	124	-	-	200	200	6	2	8
50	205	359	356	72	139	-	-	200	200	6	2	9
65	212	369	366	72	154	-	200/-	-	200	6	2	11
80	222	376	373	72	174	-	200/-	-	272[5]	6	2	12
100	242	396	393	85	214	-	250/-	-	250	6	2	16
125	255	409	406	85	239	-	250/-	-	250	6	2	19
150	276	430	427	85	282	-	300/-	-	300	6	2	27
200	304	458	455	137	338	350	350/-	-	350	8	2	40
250	332	486	483	157	393	450	450/-	-	450	8	2	60
300	357	511	508	157	444	500	500/-	-	500	8	2	80

1) 14.5 mm shorter with stainless steel terminal box (Ex and high temperature version)
2) When grounding rings are used, the thickness of the grounding ring must be added to the built-in length.
3) T_E = Grounding ring Type E, T_F = Grounding ring Type Flat ring
4) Weights are approx. (for PN 16) without transmitter
5) Not according to ISO 20456

- not available
D = Outside diameter of flange, see flange tables

© Siemens 2020

Dimensional drawings (continued)

Imperial

DN	A[1]	A_1	A_2	B	D1	L[2]				T_E[3]	T_F[3]	Weight[4]
						EN 1092-1-201			ANSI 16.5			
						PN 10	PN 16	PN 40	Class 150			
[inch]	[inch]	[inch]	[inch]	[inch]	[inch]	[inch]	[inch]	[inch]	[inch]	[inch]	[inch]	[lbs]
½	7.36	13.4	13.34	2.32	4.09	-	-	7.87	7.87	0.24	0.08	9
1	7.36	13.4	13.34	2.32	4.09	-	-	7.87	7.87	0.24	0.08	11
1½	7.76	13.8	13.74	3.23	4.88	-	-	7.87	7.87	0.24	0.08	17
2	8.07	14.1	14.04	2.83	5.47	-	-	7.87	7.87	0.24	0.08	20
2½	8.35	14.4	14.34	2.83	6.06	-	7.87/-	-	7.87	0.24	0.08	24
3	8.74	14.8	14.74	2.83	6.85	-	7.87/-	-	10.71[5]	0.24	0.08	26
4	9.53	15.6	15.54	3.35	8.43	-	9.84/-	-	9.84	0.24	0.08	35
5	10.04	16.1	16.04	3.35	9.41	-	9.84/-	-	9.84	0.24	0.08	42
6	10.87	16.9	16.84	3.35	11.10	-	11.81/-	-	11.81	0.24	0.08	60
8	11.97	18.0	17.94	5.39	13.31	13.78	13.78/-	-	13.78	0.31	0.08	88
10	13.07	19.1	19.04	6.18	15.47	17.72	17.72/-	-	17.72	0.31	0.08	132
12	14.05	20.1	20.04	6.18	17.48	19.69	19.69/-	-	19.69	0.31	0.08	176

1) 0.571 inch shorter with stainless steel terminal box (Ex and high temperature version)
2) When grounding rings are used, the thickness of the grounding ring must be added to the built-in length.
3) T_E = Grounding ring Type E, T_F = Grounding ring Type Flat ring
4) Weights are for ANSI 150 without transmitter.
5) Not according to ISO 20456

D = Outside diameter of flange, see flange tables

© Siemens 2020

Overview

The SITRANS FM MAG 5100 W is an electromagnetic flow sensor designed to meet ground water, drinking water, waste water, sewage or sludge applications.

Benefits

- DN 15 to DN 1200/2000 (½" to 48"/78")
- Stock program of MAG 5100 W secures short delivery time
- Connection flanges EN 1092-1 (DIN 2501), ANSI, AWWA, AS and JIS
- NBR Hard Rubber and Ebonite Hard Rubber liner for all water applications
- EPDM liner with drinking water approvals
- Hastelloy integrated grounding and measuring electrodes
- Increased low flow accuracy for water leak detection, due to coned liner design.
- Drinking water approvals
- Suitable for direct burial and constant flooding
- Custody transfer approvals
- Built-in length according to ISO 20456; the standard includes sizes up to DN 400.
- Easy commissioning, SENSORPROM unit automatically uploads calibration values and settings.
- Designed so patented in-situ verification can be conducted. Using SENSORPROM fingerprint.
- Custody transfer option for water billing, with type approval after OIML R 49 and verified according to MI-001 - 0D inlet/ 0D outlet installation
  - Pattern approval OIML R 49
  - Conform to ISO 4064 and EN 14154 for mechanical flowmeters
  - PTB K7.2
  - Kiwa water approval
- FM Fire Service Meter (Class Number 1044) for automatic fire protection systems.
- Meets EEC directives: PED 2014/68/EU pressure directive for EN 1092-1 flanges
- Simple onsite or factory upgrade to IP68/NEMA 6P of a standard sensor
- Type approval of marine equipment (ABS, Bureau Veritas, DNV-GL, Lloyd's Register)

Application

The main applications of the SITRANS FM electromagnetic flow sensors can be found in the following fields:

- Water abstraction
- Water treatment
- Water distribution network (leak detection management)
- Custody transfer water meters
- Irrigation
- Waste water treatment
- Filtration plant (e.g. reverse osmosis and ultra filtration)
- Industrial water applications

Mode of operation

The flow measuring principle is based on Faradays law of electromagnetic induction according to which the sensor converts the flow into an electrical voltage proportional to the velocity of the flow.

Integration

The complete flow meter consists of a flow sensor and an associated transmitter SITRANS FM MAG 5000, MAG 6000 or MAG 6000 I.

The flexible communication concept USM II simplifies integration and update to a variety of fieldbus systems, e.g. HART, DeviceNet, PROFIBUS DP and PA, FOUNDATION Fieldbus H1 or Modbus RTU/RS 485.

© Siemens 2020

3

Technical specifications

Product characteristic	MAG 5100 W (7ME6520) Mainly for the European market EPDM or NBR lining	MAG 5100 W (7ME6580) Mainly for the non-European market Ebonite lining
Design and nominal size	Coned sensor (octagon liner): DN 15 ... 40 (½" … 1½")	
	Coned sensor: DN 50 … 300 (2" … 12")	Full bore sensor: DN 25 … 2 000 (1" … 78")
	Full bore sensor: DN 350 … 1200 (14" … 48")	
Measuring principle	Electromagnetic induction	Electromagnetic induction
Excitation frequency (Mains supply: 50/60 Hz)	DN 15 … 65 (½" … 2½"): 12.5 Hz/15 Hz	DN 25 … 65 (1" … 2½"): 12.5 Hz/15 Hz
	DN 80 … 150 (3" … 6"): 6.25 Hz/7.5 Hz	DN 80 … 150 (3" … 6"): 6.25 Hz/7.5 Hz
	DN 200 … 300 (8" … 12"): 3.125 Hz/3.75 Hz	DN 200 … 300 (8" … 12"): 3.125 Hz/3.75 Hz
	DN 350 … 1200 (14" … 48"):1.5625 Hz/1.875 Hz	DN 350 … 2000 (14" … 78"):1.5625 Hz/1.875 Hz
Process connection		
Flanges[1]		
• EN 1092-1	PN 10 (145 psi): DN 200 … 300 (8" … 12") Flat face	Raised face[3] (EN 1092-1, DIN 2501 and BS 4504 have the same mating dimensions)
	PN 10 (145 psi): DN 350 … 1200 (14" … 48") Raised face[3]	PN 6 (87 psi): DN 1400 … 2000 (54" … 78")
	PN 16 (232 psi): DN 50 … 300 (2" … 12") Flat face[3]	PN 10 (145 psi): DN 200 … 2000 (8" … 78")
	PN 16 (232 psi): DN 350 … 1200 (14" … 48") Raised face	PN 16 (232 psi): DN 65 … 600 (2½" … 24")
	PN 40 (580 psi): DN 15 … 40 (½" … 1½") Flat face	PN 40 (580 psi): DN 25 … 50 (1" … 2")
• ANSI B16.5	Class 150: ½" ... 12" Flat face; 14" ... 24" raised face	Class 150: 1" … 24"; Raised face
• AWWA C-207	Class D: 28" … 48", Flat face	Class D: 28" … 78", Flat face
• AS4087	PN 16 (232 psi): DN 50 ... DN 300 (2" ... 12") Flat Face; DN 350 ... DN 1200 (14" … 48") Raised face	PN 16 (232 psi): DN 50 ... DN 1200 (2" ... 48") Raised face
• JIS B 2220:2004	K10 (1" … 24")	K10 (1" … 24")
Rated Operation conditions		
Ambient temperature		
• Sensor	-40 … +70 °C (-40 … +158 °F)	-40 … +70 °C (-40 … +158 °F)
• Compact with transmitter MAG 5000/6000 [4]	-20 … +60 °C (-4 … +140 °F)	-20 … +60 °C (-4 … +140 °F)
Operating pressure (Abs) [abs. bar] (Maximum operating pressure depending on flange standard, decreases with increasing operating temperature)	DN 15 … 40 (½" … 1½"): 0.01 … 40 bar (0.15 … 580 psi)	DN 25 … 50 (1" … 2"): 0.01 … 40 bar (0.15 … 580 psi)
	DN 50 … 300 (2" … 12"): 0.03 … 20 bar (0.44 … 290 psi)	DN 65 … 1200 (2½" … 48"): 0.01 … 16 bar (0.15 … 232 psi)
	DN 350 … 1200 (14" … 48"): 0.01 … 16 bar (0.15 … 232 psi)	DN 1400 … 2000 (54" … 78"): 0.01 … 10 bar (0.15 … 145 psi)
Enclosure rating		
• Standard	IP67 to EN 60529/NEMA 4X/6 (1 mH_2O for 30 min)	IP67 to EN 60529/NEMA 4X/6 (1 mH_2O for 30 min)
• Option	IP68 to EN 60529/NEMA 6P (10 mH_2O continuously)	IP68 to EN 60529/NEMA 6P (10 mH_2O continuously)
Pressure drop	DN 15 and 25 (½" and 1"): Max. 20 mbar (0.29 psi) at 1 m/s (3 ft/s)	Insignificant
	DN 40 … 300 (1½" … 12"): Max. 25 mbar (0.36 psi) at 3 m/s (10 ft/s)	
	DN 350 … 1200 (14" … 48"): Insignificant	
Test pressure	1.5 x PN (where applicable) FM Fire Service: 2 x PN	1.5 x PN (where applicable)
Mechanical load (vibration)	18 … 1000 Hz random in x, y, z, directions for 2 hours according to EN 60068-2-36	18 … 1000 Hz random in x, y, z, directions for 2 hours according to EN 60068-2-36
	Sensor: 3.17 g RMS	Sensor: 3.17 g RMS
	Sensor with compact MAG 5000/6000 mounted transmitter: 3.17 g RMS	Sensor with compact MAG 5000/6000 mounted transmitter: 3.17 g RMS
	Sensor with compact MAG 6000 I mounted transmitter: 1.14 g RMS	Sensor with compact MAG 6000 I mounted transmitter: 1.14 g RMS
Medium conditions		
Temperature of medium		
• NBR	-10 … +70 °C (14 … 158 °F)	-
• EPDM	-10 … +70 °C (14 … 158 °F)	-
• EPDM (MI-001)	0.1 … 30 °C (32 … 76 °F)	-
• Ebonite	-	-10 … +70 °C (14 … 158 °F)
EMC	2014/30/EU	2014/30/EU

© Siemens 2020

Technical specifications (continued)

Product characteristic	**MAG 5100 W (7ME6520)** **Mainly for the European market** **EPDM or NBR lining**	**MAG 5100 W (7ME6580)** **Mainly for the non-European market** **Ebonite lining**
Design		
Material		
• Housing and flanges	Carbon steel ASTM A 105, with corrosion-resistant coatingof category C4 or C5 according to ISO 12944-2	Carbon steel ASTM A 105, with corrosion-resistant coating of category C4 or C5 according to ISO 12944-2
• Electrode	Hastelloy C276	Hastelloy C276
• Grounding electrode	Hastelloy C276	Hastelloy C276
• Terminal box	Fibre glass reinforced polyamide	Fibre glass reinforced polyamide
Certificates and approvals		
Calibration		
• Default calibration	Zero-point, 2 x 25 % and 2 x 90 %	Zero-point, 2 x 25 % and 2 x 90 %
• Special calibration	5-point calibration: 20 %, 40 %, 60 %, 80 %, 100 % of factory Q_{max} 10-point calibration: ascending and descending at 20 %, 40 %, 60 %, 80 %, 100 % of factory Q_{max} Matched pair calibration: default, 5-point or 10-point	5-point calibration: 20 %, 40 %, 60 %, 80 %, 100 % of factory Q_{max} 10-point calibration: ascending and descending at 20 %, 40 %, 50 %, 80 %, 100 % of factory Q_{max} Matched pair calibration: default, 5-point or 10-point
Custody transfer	• MI-001 cold water (EU): DN 50 ... DN 1200 (2" ... 48") • Kiwa water approval (NL): DN 50 ... DN 1200 (2" ... 48") • Chilled water pattern approval PTB K 7.2 DN 15 ... DN 1200 (Germany)[5]	-
Drinking water	EPDM liner: • WRAS (WRc, BS690 cold water, GB) • NSF/ANSI Standard 61[6] (Cold water, US) • ACS listed (F) • DVGW W270 (D) • Belgaqua (B) • AS/NZS 4020 (Australia/New Zealand)	• WRAS (WRc, BS690 cold water, GB) • NSF/ANSI Standard 61[6] (Cold water, US)
Marine[7]	• American Bureau of Shipping (ABS) • Bureau Veritas • DNV-GL • Lloyd's Register	
Hazardous areas[7]		
Standard sensor with/without MAG 5000/6000/6000 I	• FM - NI Class I Div. 2 Groups A, B, C, D - NI Class I Zone 2 Groups IIC	• FM - NI Class I Div. 2 Groups A, B, C, D - NI Class I Zone 2 Groups IIC
Pressure equipment	• PED conforming: All EN1092-1 flanges and ANSI Class 150 (< DN 300 /<12") – 2014/68/EU[9] • CRN	• PED conforming: All EN1092-1 flanges (< DN 600 /<24") – 2014/68/EU[9] • CRN
Others	• EAC (Russia, Belarus, Kazakhstan) • KCC (South Korea) • FM Fire Service Approval acc. to class 1044[8] • VdS: Extinguishing systems DN 50 ... 300 • MCERTS (GB environmental)	• EAC (Russia, Belarus, Kazakhstan) • CMC/CPA (China)

1) DN 750, DN 1050 and DN 1100 (30", 42" and 44") not available with EN 1092-1 (PN 10 and PN 16) and AS4087 flanges

2) Type 01 (SORF)

3) DN ≤ 600 type 01 (SORF); DN > 600 type 11 (WNRF)

4) Compact with transmitter MAG 5000 CT/6000 CT -20 ... +50 °C (-4 ... 122 °F)

5) For verification submit Product Variation Request

6) Including Annex G

7) In remote version with sensor size DN 50 ... DN 300 (2" ... 12")

8) For sizes larger than 600 mm (24") in PN 16 PED conformity is available as a cost-added option. The basic unit will only carry the LVD (Low Voltage Directive) and EMC approval. All products sold outside of EU and EFTA are excluded from the directive, also products sold into certain market sectors are excluded. These include:

a) Meters used in networks for the supply, distribution and discharge of water.

b) Meters used in pipelines for the conveyance of any fluid from offshore to onshore.

c) Meters used in the extraction of petroleum or gas, including Christmas tree and manifold equipment.

d) Any meter mounted on a ship or mobile offshore platform. For further information on the PED standard and requirements see Pressure Equipment Directive in Appendix (chapter 10).

9) Not for sensors with 300 µm coating.

© Siemens 2020

Technical specifications (continued)

MAG 5100 W (7ME6520) with MAG 6000 CT (Revenue program) MI-001

MAG 5100 W CT program is type approved according to international water meter standard OIML R 49. Since the first November 2006 the MI-001 water meter directive is in force, which means that all water meters can be sold across the EU borders if the water meters contain a MI-001 label.

The MAG 5100 W MI-001 verified and labeled products are a Class II approval according to Directive 2014/32/EU of the European Parliament and Council of 26 February, 2014 on measuring instruments, Annex III Water meters (MI-001) in the sizes from DN 50 to DN 1200 (Article No. 7ME6520).

The MID certification is obtained as a modul B + D module approval according to the above mentioned directive.

Module B: Type approval according to OIML R 49

Module D: Quality insurance approval of production

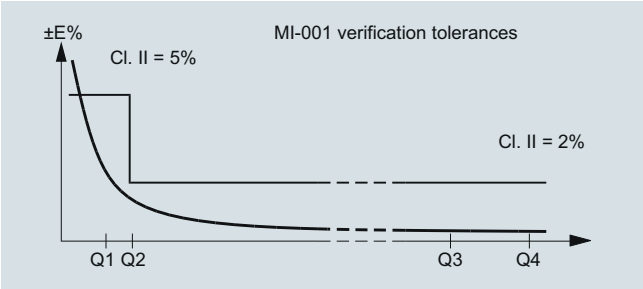

MAG 5100 W (7ME6520) with MAG 5000/MAG 6000 or MAG 6000 CT for Fire Service applications

MAG 5100 W (7ME6520) is FM Fire Service approved for automatic fire protection systems. The approval is applicable for the sizes DN 50, DN 80, DN 100, DN 150, DN 200, DN 250 and DN 300 (2", 3", 4", 6", 8", 10" and 12") with ANSI B16.5 Class 150 flanges. The FM Fire Service approved product can be ordered via the Z-options P20, P21 and P22.

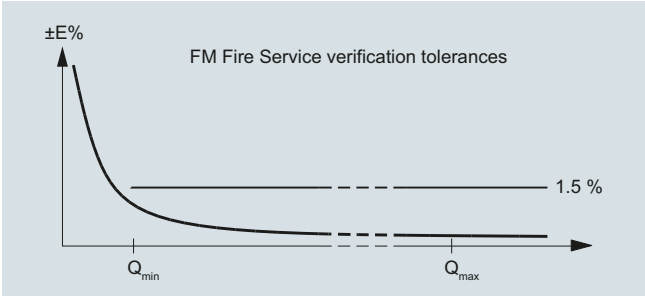

© Siemens 2020

Technical specifications (continued)

MAG 5100 W (7ME6520) MI-001 verified and labeled products at a given Q3 and Q3/Q4 = 1.25 and Q2/Q1 = 1.6 measuring ranges see table below:

Order code: P11	**DN 50 (2")**	**DN 65 (2½")**	**DN 80 (3")**	**DN 100 (4")**	**DN 125 (5")**	**DN 150 (6")**	**DN 200 (8")**	**DN 250 (10")**	**DN 300 (12")**
"R" Q3/Q1	40	40	40	40	40	40	40	40	40
Q4 [m³/h]	20	31.25	50	78.75	125	200	312.5	500	787.5
Q3 [m³/h]	**16**	**25**	**40**	**63**	**100**	**160**	**250**	**400**	**630**
Q2 [m³/h]	0.64	1.0	1.6	2.52	4.0	6.4	10.0	16.0	25.2
Q1 [m³/h]	0.4	0.63	1.0	1.58	2.5	4.0	6.25	10.0	15.75

Order code: P12	**DN 50 (2")**	**DN 65 (2½")**	**DN 80 (3")**	**DN 100 (4")**	**DN 125 (5")**	**DN 150 (6")**	**DN 200 (8")**	**DN 250 (10")**	**DN 300 (12")**
"R" Q3/Q1	63	63	63	63	63	63	63	63	63
Q4 [m³/h]	20	31.25	50	78.75	125	200	312.5	500	787.5
Q3 [m³/h]	**16**	**25**	**40**	**63**	**100**	**160**	**250**	**400**	**630**
Q2 [m³/h]	0.41	0.63	1.02	1.6	2.5	4.1	6.3	10.2	16.0
Q1 [m³/h]	0.25	0.40	0.63	1.00	1.59	2.54	3.97	6.35	10.0

Order code: P13	**DN 50 (2")**	**DN 65 (2½")**	**DN 80 (3")**	**DN 100 (4")**	**DN 125 (5")**	**DN 150 (6")**	**DN 200 (8")**	**DN 250 (10")**	**DN 300 (12")**
"R" Q3/Q1	80	80	80	80	80	80	80	80	80
Q4 [m³/h]	20	31.3	50	78.75	125	200	312.5	500	787.5
Q3 [m³/h]	**16**	**25**	**40**	**63**	**100**	**160**	**250**	**400**	**630**
Q2 [m³/h]	0.32	0.5	0.8	1.26	2.0	3.2	5.0	8.0	12,6
Q1 [m³/h]	0.20	0.31	0.50	0.79	1.25	2.00	3.13	5.00	7.9

Order code: P16	**DN 50 (2")**	**DN 65 (2½")**	**DN 80 (3")**	**DN 100 (4")**	**DN 125 (5")**	**DN 150 (6")**	**DN 200 (8")**	**DN 250 (10")**	**DN 300 (12")**
"R" Q3/Q1	160	160	160	160	160	160	160	160	160
Q4 [m³/h]	50	78.5	125	200	312.5	500	787.5	1250	2000
Q3 [m³/h]	**40**	**63**	**100**	**160**	**250**	**400**	**630**	**1000**	**1600**
Q2 [m³/h]	0.4	0.63	1.0	1.6	2.5	4.0	6.3	10.0	16.0
Q1 [m³/h]	0.25	0.39	0.63	1.0	1.56	2.5	3.94	6.3	10.0

Order code: P17	**DN 50 (2")**	**DN 65 (2½")**	**DN 80 (3")**	**DN 100 (4")**	**DN 125 (5")**	**DN 150 (6")**	**DN 200 (8")**	**DN 250 (10")**	**DN 300 (12")**
"R" Q3/Q1	200	200	200	200	200	200	200	200	200
Q4 [m³/h]	50	78.5	125	200	312.5	500	787.5	1250	2000
Q3 [m³/h]	**40**	**63**	**100**	**160**	**250**	**400**	**630**	**1000**	**1600**
Q2 [m³/h]	0.32	0.50	0.80	1.28	2.0	3.2	5.0	8.0	12.8
Q1 [m³/h]	0.2	0.32	0.50	0.8	1.25	2.0	3.15	5.0	8.0

Order code: P18	**DN 50 (2")**	**DN 65 (2½")**	**DN 80 (3")**	**DN 100 (4")**	**DN 125 (5")**	**DN 150 (6")**	**DN 200 (8")**	**DN 250 (10")**	**DN 300 (12")**
"R" Q3/Q1	250	250	250	250	250	250	250	250	250
Q4 [m³/h]	50	78.5	125	200	312.5	500	787.5	1250	2000
Q3 [m³/h]	**40**	**63**	**100**	**160**	**250**	**400**	**630**	**1000**	**1600**
Q2 [m³/h]	0.26	0.4	0.64	1.02	1.6	2.56	4.0	6.4	10.24
Q1 [m³/h]	0.16	0.25	0.4	0.64	1.0	1.6	2.52	4.0	6.4

Order code: P24	**DN 350 (14")**	**DN 400 (16")**	**DN 450 (18")**	**DN 500 (20")**	**DN 600 (24")**
"R" Q3/Q1	40	40	40	40	40
Q4 [m³/h]	1250	1250	2000	2000	3125
Q3 [m³/h]	**1000**	**1000**	**1600**	**1600**	**2500**
Q2 [m³/h]	40.0	40.0	64.0	64.0	100.0
Q1 [m³/h]	25.0	25.0	40.0	40.0	62.5

Order code: P25	**DN 350 (14")**	**DN 400 (16")**	**DN 450 (18")**	**DN 500 (20")**	**DN 600 (24")**
"R" Q3/Q1	63	63	63	63	63
Q4 [m³/h]	1250	2000	3125	3125	5000
Q3 [m³/h]	**1000**	**1600**	**2500**	**2500**	**4000**
Q2 [m³/h]	25.4	40.63	63.49	63.49	101.6
Q1 [m³/h]	15.9	25.4	39.7	39.7	63.49

© Siemens 2020

Technical specifications (continued)

Order code: P26	DN 350 (14")	DN 400 (16")	DN 450 (18")	DN 500 (20")	DN 600 (24")
"R" Q3/Q1	80	80	80	80	80
Q4 [m³/h]	2000	3125	5000	5000	7875
Q3 [m³/h]	**1600**	**2500**	**4000**	**4000**	**6300**
Q2 [m³/h]	32.0	50.0	80.0	80.0	126.0
Q1 [m³/h]	20.0	31.25	50.0	50.0	78.75

Order code: P27	DN 350 (14")	DN 400 (16")	DN 450 (18")	DN 500 (20")	DN 600 (24")
"R" Q3/Q1	100	100	100	100	100
Q4 [m³/h]	3125	3125	5000	5000	7875
Q3 [m³/h]	**2500**	**2500**	**4000**	**4000**	**6300**
Q2 [m³/h]	40.0	2540.0	64.0	64.0	100.8
Q1 [m³/h]	25.0	25.0	40.0	40.0	63.0

Order code: P29	DN 700 (28")	DN 750 (30")	DN 800 (32")	DN 900 (36")	DN 1000 (40")	DN 1200 (48")
"R" Q3/Q1	40	40	40	40	40	40
Q4 [m³/h]	5000	5000	5000	7875	7875	7875
Q3 [m³/h]	**4000**	**4000**	**4000**	**6300**	**6300**	**6300**
Q2 [m³/h]	160.0	160.0	160.0	252.0	252.0	252.0
Q1 [m³/h]	100.0	100.0	100.0	157.5	157.5	157.5

Order code: P30	DN 700 (28")	DN 750 (30")	DN 800 (32")	DN 900 (36")	DN 1000 (40")	DN 1200 (48")
"R" Q3/Q1	63	63	63	63	63	-
Q4 [m³/h]	5000	5000	5000	7875	7875	-
Q3 [m³/h]	**4000**	**4000**	**4000**	**6300**	**6300**	**-**
Q2 [m³/h]	101.6	101.6	101.6	160.0	160.0	-
Q1 [m³/h]	63.5	63.5	63.5	100.0	100.0	-

Order code: P31	DN 700 (28")	DN 750 (30")	DN 800 (32")	DN 900 (36")	DN 1000 (40")	DN 1200 (48")
"R" Q3/Q1	80	80	80	80	80	-
Q4 [m³/h]	5000	5000	5000	7875	7875	-
Q3 [m³/h]	**4000**	**4000**	**4000**	**6300**	**6300**	**-**
Q2 [m³/h]	80.0	80.0	80.0	126.0	126.0	-
Q1 [m³/h]	50.0	50.0	50.0	78.75	78.75	-

The label is placed on the transmitter housing. An example of the product label is shown below:

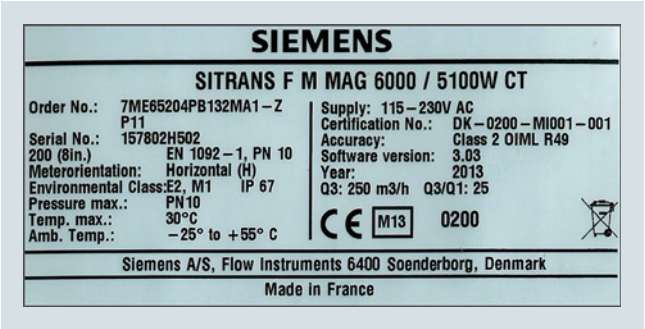

OIML R 49/MI-001 approvals valid for:

- DN 50 to 1200 mm (2" to 48")
- Horizontal and vertical installation
- Compact or remote with max. 500 m cable
- Power supply 115 to 230 V AC, 12 to 24 V AC/DC
- With or without communication module

Other restrictions may apply (see certificate)

Special OIML / MI-001 settings:

- Unit: m³
- Qmax: Q3
- Low flow cut-off: 0.1 %
- Digital output: Frequency

For other factory settings, see Operating Instructions.

© Siemens 2020

Selection and ordering data

Sensor SITRANS FM MAG 5100 W ↗ Hastelloy electrodes, carbon steel flanges, EU water markets and low flow applications	Article No. 7ME6520-	Ord. code
↗ Click on the Article No. for the online configuration in the PIA Life Cycle Portal.	■ ■ ■ ■ ■ - 2 ■ ■ ■	■ ■ ■
Diameter		
DN 15 (½")	1 V	
DN 25 (1")	2 D	
DN 40 (1½")	2 R	
DN 50 (2")	2 Y	
DN 65 (2½")	3 F	
DN 80 (3")	3 M	
DN 100 (4")	3 T	
DN 125 (5")	4 B	
DN 150 (6")	4 H	
DN 200 (8")	4 P	
DN 250 (10")	4 V	
DN 300 (12")	5 D	
DN 350 (14")	5 K	
DN 400 (16")	5 R	
DN 450 (18")	5 Y	
DN 500 (20")	6 F	
DN 600 (24")	6 P	
DN 700 (28")	6 Y	
DN 750 (30")	7 D	
DN 800 (32")	7 H	
DN 900 (36")	7 M	
DN 1000 (40")	7 R	
(42")	7 U	
(44")	7 V	
DN 1200 (48")	8 B	
Flange norm and pressure rating		
EN 1092-1		
PN 10 (DN 200 ... 1200/8" ... 48")	B	
PN 16 (DN 50 ... 1200/2" ... 48")	C	
PN 16, non PED (DN 700 ... 1200/28" ... 48")	D	
PN 40 (DN 15 ... 40/½" ... 1½")	F	
ANSI B16.5		
class 150 (½" ... 24")	J	
AWWA C-207		
Class D (28" ... 48")	L	
AS 4087		
PN 16 (DN 50 ... 1200/2" ... 48")	N	
JIS		
B 2220:2004 K10 (1" ... 24")	R	
Flange material and coating		
Carbon steel flanges ASTM A 105, corrosion-resistant coating of category C4	1	
Carbon steel flanges ASTM A 105, 300 µm corrosion-resistant coating of category C5	4	
Liner material		
EPDM	2	
NBR	3	

Sensor SITRANS FM MAG 5100 W Hastelloy electrodes, carbon steel flanges, EU water markets and low flow applications	Article No. 7ME6520-	Ord. code
	■ ■ ■ ■ ■ - 2 ■ ■ ■	■ ■ ■
Transmitter		
Sensor for remote transmitter (Order transmitter separately)	A	
MAG 6000 I, Aluminum, 18 ... 90 V DC, 115 ... 230 V AC	C	
MAG 6000, Polyamid, 11 ... 30 V DC/11 ... 24 V AC	H	
MAG 6000, Polyamid, 115 ... 230 V AC	J	
MAG 5000, Polyamid, 11 ... 30 V DC/11 ... 24 V AC	K	
MAG 5000, Polyamid, 115 ... 230 V AC	L	
MAG 6000 CT, Polyamid, 115 ... 230 V AC	M	
MAG 6000 CT, Polyamid, 11 ... 30 V DC/11 ... 24 V AC	R	
Transmitter including wall-mounting kit for remote design		
MAG 5000, Polyamid, 115 ... 230 V AC, incl. special wall-mounting unit (approved marine equipment)		
• M20x1.5 cable glands	Z	P 0 C
• ½" NPT cable glands	Z	P 0 D
MAG 6000, Polyamid, 115 ... 230 V AC, incl. special wall-mounting unit (approved marine equipment)		
• M20x1.5 cable glands	Z	P 0 G
• ½" NPT cable glands	Z	P 0 H
MAG 6000 CT, Polyamid, 11 ... 30 V DC/11 ... 24 V AC, incl. wall-mounting unit		
• M20x1.5 cable glands	Z	P 0 J
• ½" NPT cable glands	Z	P 0 K
MAG 6000 CT, Polyamid, 115 ... 230 V AC, incl. wall-mounting unit		
• M20x1.5 cable glands	Z	P 0 L
• ½" NPT cable glands	Z	P 0 M
Communication		
None	A	
HART	B	
PROFIBUS PA Profile 3 (only MAG 6000/ MAG 6000 I)	F	
PROFIBUS DP Profile 3 (only MAG 6000/ MAG 6000 I)	G	
Modbus RTU/RS 485 (only MAG 6000/ MAG 6000 I)	E	
FOUNDATION Fieldbus H1 (only MAG 6000/ MAG 6000 I)	J	
Cable glands/terminal box		
Metric: Polyamide terminal box or MAG 6000 I compact	1	
½" NPT: Polyamide terminal box or MAG 6000 I compact	2	

© Siemens 2020

Selection and ordering data

	Order code
Additional information	
Please add "**-Z**" to Article No. and specify Order code(s) and plain text.	
Certificates	
• Pressure test certificate according to EN 10204-3.1	**C01**
• Material certificate according to EN 10204-3.1	**C12**
• Factory certificate according to EN 10204-2.2	**C14**
• Factory certificate according to EN 10204-2.1	**C15**
Special calibration	
• 5-point calibration for DN 15 ... DN 200[1)]	**D01**
• 5-point calibration for DN 250 ... DN 600[1)]	**D02**
• 5-point calibration for DN 700 ... DN 1200[1)]	**D03**
• 10-point calibration for DN 15 ... DN 200[2)]	**D06**
• 10-point calibration for DN 250 ... DN 600[2)]	**D07**
• 10-point calibration for DN 700 ... DN 1200[2)]	**D08**
• Default (2 x 25 % and 2 x 90 %) matched-pair calibration for DN 15 ... DN 200	**D11**
• Default (2 x 25 % and 2 x 90 %) matched-pair calibration for DN 250 ... DN 600	**D12**
• Default (2 x 25 % and 2 x 90 %) matched-pair calibration for DN 700 ... DN 1200	**D13**
• 5-point, matched-pair calibration for DN 15 ... DN 200[1)]	**D15**
• 5-point, matched-pair calibr. for DN 250 ... DN 600[1)]	**D16**
• 5-point, matched-pair calibr. for DN 700 ... DN 1200[1)]	**D17**
• 10-point, matched-pair calibration for DN 15 ... DN 200[2)]	**D18**
• 10-point, matched-pair calibr. for DN 250 ... DN 600[2)]	**D19**
• 10-point, matched-pair calibr. for DN 700 ... DN 1200[2)]	**D20**
• Accredited 5-point matched-pair calibration acc. to ISO 17025 DN 15 ... DN 200	**D21**
• Accredited 5-point matched-pair calibration acc. to ISO 17025 DN 250 ... DN 600	**D22**
• Accredited 5-point matched-pair calibration acc. to ISO 17025 DN 600 ... DN 1200	**D23**
Country of origin	
• France	**F55**
Sensor cables	
• Standard coil and electrode cable, PVC jacket	
- 5 m (16 ft)	**K01**
- 10 m (33 ft)	**K02**
- 20 m (65 ft)	**K04**
- 30 m (98 ft)	**K06**
- 40 m (131 ft)	**K07**
- 50 m (164 ft)	**K08**
- 60 m (197 ft)	**K09**
- 100 m (328 ft)	**K10**
- 150 m (492 ft)	**K11**
- 200 m (656 ft)	**K12**
- 500 m (1640 ft)	**K13**
• Standard coil and special electrode cable, PVC jacket	
- 5 m (16 ft)	**K51**
- 10 m (33 ft)	**K52**
- 20 m (65 ft)	**K54**
- 30 m (98 ft)	**K56**
- 40 m (131 ft)	**K57**
- 50 m (164 ft)	**K58**
- 60 m (197 ft)	**K59**
- 100 m (328 ft)	**K60**
- 150 m (492 ft)	**K61**
- 200 m (656 ft)	**K62**
- 500 m (1640 ft)	**K63**
Terminal blocks	
• Factory mounted terminal blocks	**N02**

	Order code
Additional information	
Please add "**-Z**" to Article No. and specify Order code(s) and plain text.	
Approval/Verification[3)]	
• Without verification acc. to OIML R 49 (DN 50 ... DN 300)	**P10**
• MI-001 Q3/Q1 = 40 (DN 50 ... DN 300)	**P11**
• MI-001 Q3/Q1 = 63 (DN 50 ... DN 300)	**P12**
• MI-001 Q3/Q1 = 80 (DN 50 ... DN 300)	**P13**
• MI-001 Q3/Q1 = 160 (DN 50 ... DN 300)	**P16**
• MI-001 Q3/Q1 = 200 (DN 50 ... DN 300)	**P17**
• MI-001 Q3/Q1 = 250 (DN 50 ... DN 300)	**P18**
• Without verification according to OIML R 49 (DN 350 ... DN 600)	**P23**
• MI-001 Q3/Q1 = 40 (DN 350 ... DN 600)	**P24**
• MI-001 Q3/Q1 = 63 (DN 350 ... DN 600)	**P25**
• MI-001 Q3/Q1 = 80 (DN 350 ... DN 600)	**P26**
• MI-001 Q3/Q1 = 100 (DN 350 ... DN 600)	**P27**
• Without verification according to OIML R 49 (DN 700 ... DN 1200)	**P28**
• MI-001 Q3/Q1 = 40 (DN 700 ... DN 1200)	**P29**
• MI-001 Q3/Q1 = 63 (DN 700 ... DN 1200)	**P30**
• MI-001 Q3/Q1 = 80 (DN 700 ... DN 1200)	**P31**
• PTB K7.2 QP/QI=25 (DN 15 ... DN 300)	**P41**
• PTB K7.2 QP/QI=50 (DN 15 ... DN 300)	**P42**
• PTB K7.2 QP/QI=100 Low dynamic range (DN 15 ... DN 300)	**P43**
• PTB K7.2 QP/QI=100 High dynamic range (DN 15 ... DN 300)	**P44**
• PTB K7.2 QP/QI=250 (DN 50 ... DN 300)	**P45**
• PTB K7.2 QP/QI=25 (DN 350 ... DN 600)	**P47**
• PTB K7.2 QP/QI=50 (DN 350 ... DN 600)	**P48**
• PTB K7.2 QP/QI=100 Low dynamic range (DN 350 ... DN 600)	**P49**
Pulse output setting	
Volume / Pulse	
• 0.001 l/pulse	**L01**
• 0.01 l/pulse	**L02**
• 0.1 l/pulse	**L03**
• 0.5 l/pulse	**L04**
• 1 l/pulse	**L05**
• 5 l/pulse	**L06**
• 10 l/pulse	**L07**
• 50 l/pulse	**L08**
• 100 l/pulse	**L09**
• 500 l/pulse	**L10**
• 1 m^3/pulse	**L11**
• 5 m^3/pulse	**L12**
• 10 m^3/pulse	**L13**
• 50 m^3/pulse	**L14**
• 100 m^3/pulse	**L15**
• 500 m^3/pulse	**L16**
• 1000 m^3/pulse	**L17**
	L17
Pulse width	
• 2 ms	**L61**
• 5 ms	**L62**
• 10 ms	**L63**
• 20 ms	**L64**
• 50 ms	**L65**
• 100 ms	**L66**
• 200 ms	**L67**
• 500 ms	**L68**
FM Fire Service Approval (with ANSI B16.5 Class 150 flanges)	
• DN 50, DN 80 and DN 100 (2", 3" and 4")	**P20**
• DN 150 and DN 200 (6" and 8")	**P21**
• DN 250 and DN 300 (10" and 12")	**P22**

© Siemens 2020

Selection and ordering data

	Article No.
Additional information	
Please add "**-Z**" to Article No. and specify Order code(s) and plain text.	
Country specific label	Order code
FP2E label (France)	**H20**
ADDC label (Abu Dhabi)	**H23**
CRN (Canadian Registration Number)	**H25**
Tag name plate, stainless steel (specify in plain text)	**Y17**
Tag name plate, plastic (self-adhesive)	**Y18**
Customer-specific transmitter setting	**Y20**
Factory mounted sensor cables	
• Sensor cables wired (specify Article No. for sensor cables and order cables separately or specify K-option)	**Y40**
• Sensor cables wired and IP68 sealing (specify Article No. for sensor cables and order cables separately or specify K-option)	**Y41**
Additional calibrations	
• Customer-witnessed calibration Any of above calibration	**On request**[4]

[1] 20 %, 40 %, 60 %, 80 %, 100 % of factory Q_{max}
[2] Ascending and descending at 20 %, 40 %, 60 %, 80 %, 100 % of factory Q_{max}
[3] For more details and references of the ranges please see the tables on page 3/95.
[4] Product Variation Request (PVR)

Sensor SITRANS FM MAG 5100 W ↗	**7ME6580-**									
Hastelloy electrodes, carbon steel flanges, Non EU water markets	■	■	■	■	■	-	■	■	■	■
↗ Click on the Article No. for the online configuration in the PIA Life Cycle Portal.										
Diameter										
DN 25 (1")	**2**	**D**								
DN 40 (1½")	**2**	**R**								
DN 50 (2")	**2**	**Y**								
DN 65 (2½")	**3**	**F**								
DN 80 (3")	**3**	**M**								
DN 100 (4")	**3**	**T**								
DN 125 (5")	**4**	**B**								
DN 150 (6")	**4**	**H**								
DN 200 (8")	**4**	**P**								
DN 250 (10")	**4**	**V**								
DN 300 (12")	**5**	**D**								
DN 350 (14")	**5**	**K**								
DN 400 (16")	**5**	**R**								
DN 450 (18")	**5**	**Y**								
DN 500 (20")	**6**	**F**								
DN 600 (24")	**6**	**P**								
DN 700 (28")	**6**	**Y**								
DN 750 (30")	**7**	**D**								
DN 800 (32")	**7**	**H**								
DN 900 (36")	**7**	**M**								
DN 1000 (40")	**7**	**R**								
DN 1050 (42")	**7**	**U**								
DN 1100 (44")	**7**	**V**								
DN 1200 (48")	**8**	**B**								
DN 1400 (54")	**8**	**F**								
DN 1500 (60")	**8**	**K**								
DN 1600 (66")	**8**	**P**								
DN 1800 (72")	**8**	**T**								
DN 2000 (78")	**8**	**Y**								

Sensor SITRANS FM MAG 5100 W	**7ME6580-**									
Hastelloy electrodes, carbon steel flanges, Non EU water markets	■	■	■	■	■	-	■	■	■	■
Flange norm and pressure rating										
EN 1092-1										
PN 6 (DN 1400 ... 2000 (54" ... 78"))[1]		**A**								
PN 10 (DN 200 ... 2000 (8" ... 78"))[1]		**B**								
PN 16 (DN 65 ... 600 (2½" ... 24"))		**C**								
PN 16, non-PED (DN 700 ... 2000 (28" ... 78"))		**D**								
PN 40 (DN 25 ... 50 (1" ... 2"))		**F**								
ANSI B16.5										
Class 150 (1" ... 24")		**J**								
AWWA C-207										
Class D (28" ... 78")[1]		**L**								
AS 4087										
PN 16 (DN 50 ... 1200 (2" ... 48"))		**N**								
JIS										
B 2220:2004 K10 (1" ... 24")		**R**								
Flange material and coating										
Carbon steel flanges ASTM A 105, corrosion-resistant coating of category C4			**1**							
Carbon steel flanges ASTM A 105, 300 µm corrosion-resistant coating of category C5			**4**							
Liner material										
Ebonite				**4**						
Electrode material										
Hastelloy							**2**			
Transmitter										
Sensor for remote transmitter (Order transmitter separately)								**A**		
MAG 6000, Polyamid, 11 ... 30 V DC/11 ... 24 V AC								**H**		
MAG 6000, Polyamid, 115 ... 230 V AC								**J**		
MAG 5000, Polyamid, 11 ... 30 V DC/11 ... 24 V AC								**K**		
MAG 5000, Polyamid, 115 ... 230 V AC								**L**		
Communication										
No communication, add-on possible									**A**	
HART									**B**	
PROFIBUS PA Profile 3 (only MAG 6000)									**F**	
PROFIBUS DP Profile 3 (only MAG 6000)									**G**	
Modbus RTU/RS 485 (only MAG 6000)									**E**	
FOUNDATION Fieldbus H1 (only MAG 6000)									**J**	
Cable glands/terminal box										
Metric: Polyamide terminal box or MAG 6000 I compact										**1**
½" NPT: Polyamide terminal box or MAG 6000 I compact										**2**

[1] DN 1400 to DN 2000 (54" to 78") do not conform to PED or CRN.

© Siemens 2020

Selection and ordering data

	Order code
Additional information	
Please add "**-Z**" to Article No. and specify Order code(s) and plain text.	
Certificates	
Pressure test certificate according to EN 10204-3.1	**C01**
Factory certificate according to EN 10204-2.2	**C14**
Factory certificate according to EN 10204-2.1	**C15**
Special calibration	
• 5-point calibration for DN 15 ... DN 200[1)]	**D01**
• 5-point calibration for DN 250 ... DN 600[1)]	**D02**
• 5-point calibration for DN 700 ... DN 1200[1)]	**D03**
• 10-point calibration for DN 15 ... DN 200[2)]	**D06**
• 10-point calibration for DN 250 ... DN 600[2)]	**D07**
• 10-point calibration for DN 700 ... DN 1200[2)]	**D08**
• Default (2 x 25 % and 2 x 90 %) match-pair calibration for DN 15 ... DN 200	**D11**
• Default (2 x 25 % and 2 x 90 %) match-pair calibration for DN 250 ... DN 600	**D12**
• Default (2 x 25 % and 2 x 90 %) match-pair calibration for DN 700 ... DN 1200	**D13**
• 5-point, matched-pair calibration for DN 15 ... DN 200[1)]	**D15**
• 5-point, matched-pair calibration for DN 250 ... DN 600[1)]	**D16**
• 5-point, matched-pair calibration for DN 700 ... DN 1200[1)]	**D17**
• 10-point, matched-pair calibration for DN 15 ... DN 200[2)]	**D18**
• 10-point, matched-pair calibration for DN 250 ... DN 600[2)]	**D19**
• 10-point, matched-pair calibration for DN 700 ... DN 1200[2)]	**D20**
Terminal blocks	
• Factory mounted terminal blocks	**N02**
Country specific label	
CRN (Canadian Registration Number)	**H25**
Tag name plate, stainless (specify in plain text)	**Y17**
Tag name plate, plastic (self-adhesive)	**Y18**
Customer-specific transmitter setting	**Y20**
Factory mounted sensor cables	
• Sensor cables wired (specify Article No. for sensor cables and order cables separately)	**Y40**
• Sensor cables wired and IP68 sealing (specify Article No. for sensor cables and order cables separately)	**Y41**

1) 20 %, 40 %, 60 %, 80 %, 100 % of factory Q_{max}

2) Ascending and descending at 20 %, 40 %, 60 %, 80 %, 100 % of factory Q_{max}

Operating instructions for SITRANS FM MAG 5100 W

Description	Article No.
• English	**A5E03063678**
• German	**A5E03376527**

All literature is available to download for free, in a range of languages, at
http://www.siemens.com/processinstrumentation/documentation

Accessories

Description	Article No.	
Potting kit for IP68/NEMA 6P sealing of sensor junction box	**FDK:085U0220**	

MAG 5000/6000 transmitters and sensors are packed in separate boxes, the final assembly takes place during installation at the customer's place. MAG 6000 I transmitters and sensors are delivered compact mounted from factory. Communication module will be pre-mounted in the transmitter.

Please use online Product selector to get latest updates:

http://www.pia-selector.automation.siemens.com

© Siemens 2020

Dimensional drawings

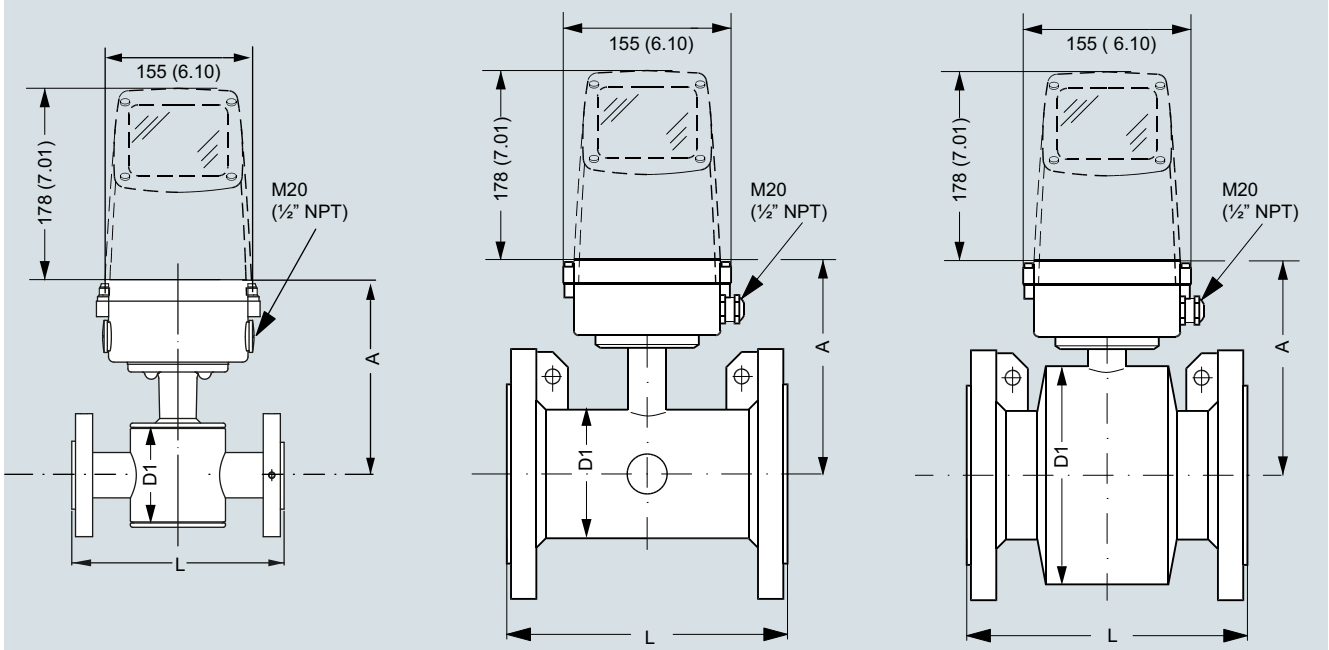

7ME6520: DN 15 ... 40 (½" ... 1½")

7ME6520: DN 50 ... 300 (2" ... 12")

7ME6520: DN 350 ... 1200 (14" ... 48")
7ME6580: DN 25 ... 2000 (1" ... 78")

		7ME6520 NBR or EPDM liner				7ME6580 Ebonite liner					
Nominal size		A		D1		A		D1		L[1]	
[mm]	[inch]	[mm]	[inch]	[mm]	[inch]	[mm]	[inch]	[mm]	[inch]	[mm]	[inch]
15	½	177	7.0	77	3.0	-	-	-	-	200	7.9
25	1	187	7.4	96	3.8	187	7.4	104	4.09	200	7.9
40	1½	202	8.0	127	5.0	197	7.8	124	4.88	200	7.9
50	2	188	7.4	76	3.0	205	8.1	139	5.47	200	7.9
65	2½	194	7.6	89	3.5	212	8.3	154	6.06	200	7.9
80	3	200	7.9	102	4.0	222	8.7	174	6.85	200	7.9
100	4	207	8.1	114	4.5	242	9.5	214	8.43	250	9.8
125	5	217	8.5	140	5.5	255	10.0	239	9.41	250	9.8
150	6	232	9.1	168	6.6	276	10.9	282	11.1	300	11.8
200	8	257	10.1	219	8.6	304	12.0	338	13.31	350	13.8
250	10	284	11.2	273	10.8	332	13.1	393	15.47	450	17.7
300	12	310	12.2	324	12.8	357	14.1	444	17.48	500	19.7
350	14	382	15.0	451	17.8	362	14.3	451	17.76	550	21.7
400	16	407	16.0	502	19.8	387	15.2	502	19.76	600	23.6
450	18	438	17.2	563	22.2	418	16.5	563	22.16	600	23.6
500	20	463	18.2	614	24.2	443	17.4	614	24.17	600	23.6
600	24	514	20.2	715	28.2	494	19.4	715	28.15	600	23.6
700	28	564	22.2	816	32.1	544	21.4	816	32.13	700	27.6
750	30	591	23.3	869	34.2	571	22.5	869	34.21	750	29.5
800	32	616	24.3	927	36.5	606	23.9	927	36.5	800	31.5
900	36	663	26.1	1032	40.6	653	25.7	1032	40.63	900	35.4
1000	40	714	28.1	1136	44.7	704	27.7	1136	44.72	1000	39.4
	42	714	28.1	1136	44.7	704	27.7	1136	44.72	1000	39.4
	44	765	30.1	1238	48.7	755	29.7	1238	48.74	1100	43.3
1200	48	820	32.3	1348	53.1	810	31.9	1348	53.07	1200	47.2
1400	54	-	-	-	-	925	36.4	1574	65.94	1400	55.1
1500	60	-	-	-	-	972	38.2	1672	65.83	1500	59.1
1600	66	-	-	-	-	1025	40.4	1774	75.39	1600	63.0
1800	72	-	-	-	-	1123	44.2	1974	77.72	1800	70.9
2000	78	-	-	-	-	1223	48.1	2174	85.59	2000	78.7

[1] Tolerances on built-in length:
DN 15 to DN 200 (½" to 8"): +0/-3 mm (+0/-0.12"), DN 250 to DN 400 (10" to 16"): +0/-5 mm (+0/-0.20"),
DN 450 to DN 600 (18" to 24"): +5/-5 mm (+0.20/-0.20"), DN 700 to DN 2000 (28" to 78"): +10/-10 mm (+0.39/-0.39")

© Siemens 2020

3

Dimensional drawings (continued)

MAG 5100 W/6000 I Compact

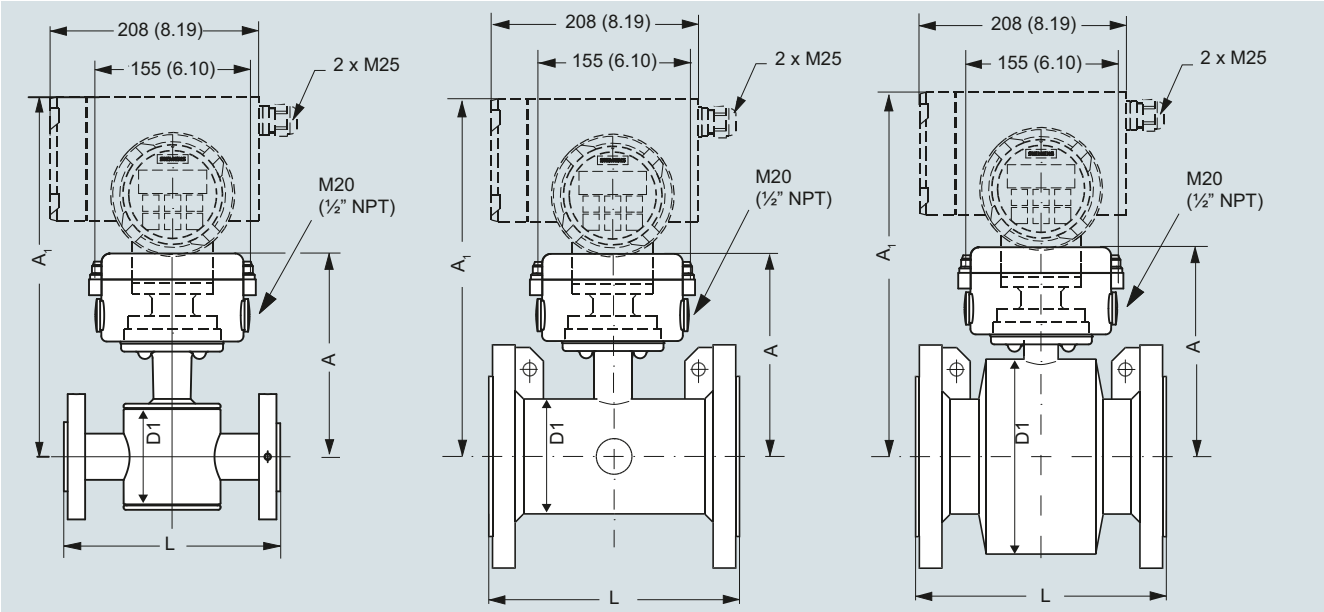

7ME6520: DN 15 ... 40 (½" ... 1½")

7ME6520: DN 50 ... 300 (2" ... 12")

7ME6520: DN 350 ... 2000 (14" ... 78")
7ME6580: DN 25 ... 2000 (1" ... 78")

		7ME6520 NBR or EPDM liner						7ME6580 Ebonite liner							
Nominal size		A		A1		D1		A		A1		D1		L[1]	
[mm]	[inch]	[mm]	[inch]	[mm]	[inch]	[mm]	[inch]	[mm]	[inch]	[mm]	[inch]	[mm]	[inch]	[mm]	[inch]
15	½	177	7.0	331	13.0	77	3.0	187	7.4	-	-	-	-	200	7.9
25	1	187	7.4	341	13.4	96	3.8	187	7.4	341	13.4	104	4.09	200	7.9
40	1½	202	8.0	356	14.0	127	5.0	197	7.8	351	13.8	124	4.88	200	7.9
50	2	188	7.4	342	13.5	76	3.0	205	8.1	359	14.1	139	5.47	200	7.9
65	2½	194	7.6	348	13.7	89	3.5	212	8.3	366	14.4	154	6.06	200	7.9
80	3	200	7.9	354	14.0	102	4.0	222	8.7	376	14.8	174	6.85	200	7.9
100	4	207	8.1	361	14.2	114	4.5	242	9.5	396	15.6	214	8.43	250	9.8
125	5	217	8.5	371	14.6	140	5.5	255	10.0	409	16.1	239	9.41	250	9.8
150	6	232	9.1	386	15.2	168	6.6	276	10.9	430	16.9	282	11.1	300	11.8
200	8	257	10.1	411	16.2	219	8.6	304	12.0	458	18.0	338	13.31	350	13.8
250	10	284	11.2	438	17.2	273	10.8	332	13.1	486	19.1	393	15.47	450	17.7
300	12	310	12.2	464	18.3	324	12.8	357	14.1	511	20.1	444	17.48	500	19.7
350	14	382	15.0	536	21.1	451	17.8	362	14.3	516	20.3	451	17.76	550	21.7
400	16	407	16.0	561	22.1	502	19.8	387	15.2	541	21.3	502	19.76	600	23.6
450	18	438	17.2	592	23.3	563	22.2	418	16.5	572	22.5	563	22.16	600	23.6
500	20	463	18.2	617	24.3	614	24.2	443	17.4	597	23.5	614	24.17	600	23.6
600	24	514	20.2	668	26.3	715	28.2	494	19.4	648	25.5	715	28.15	600	23.6
700	28	564	22.2	718	28.3	816	32.1	544	21.4	698	27.5	816	32.13	700	27.6
750	30	591	23.3	745	29.3	869	34.2	571	22.5	725	28.5	869	34.21	750	29.5
800	32	616	24.3	770	30.3	927	36.5	606	23.9	760	29.9	927	36.5	800	31.5
900	36	663	26.1	817	32.2	1032	40.6	653	25.7	807	31,8	1032	40.63	900	35.4
1000	40	714	28.1	868	34.2	1136	44.7	704	27.7	858	33.8	1136	44.72	1000	39.4
	42	714	28.1	868	34.2	1136	44.7	704	27.7	858	33.8	1136	44.72	1000	39.4
	44	765	30.1	919	36.2	1238	48.7	755	29.7	904	35.6	1238	48.74	1100	43.3
1200	48	820	32.3	974	38.3	1348	53.1	810	31.9	964	38.0	1348	53.07	1200	47.2
1400	54	-	-	-	-	-	-	925	36.4	1079	42.5	1574	61.97	1400	55.1
1500	60	-	-	-	-	-	-	972	38.2	1126	44.3	1672	65.83	1500	59.1
1600	66	-	-	-	-	-	-	1025	40.4	1179	46.4	1774	59.84	1600	63.0
1800	72	-	-	-	-	-	-	1123	44.2	1277	50.3	1974	77.72	1800	70.9
2000	78	-	-	-	-	-	-	1223	48.1	1377	54.2	2174	85.59	2000	78.7

[1] Tolerances on built in length:
DN 15 to DN 200 (½" to 8"): +0/-3 mm (+0/-0.12"), DN 250 to DN 400 (10" to 16"): +0/-5 mm (+0/-0.20")
DN 450 to DN 600 (18" to 24"): +5/-5 mm (+0.20/-0.20"), DN 700 to DN 2000 (28" to 78"): +10/-10 mm (+0.39/-0.39")

© Siemens 2020

Dimensional drawings (continued)

		7ME6520 NBR or EPDM liner										7ME6580 Ebonite liner			
Nominal size DN		**PN 10**		**PN 16**		**PN 40**		**Class 150/AWWA**		**AS**		**PN 16**		**JIS 10K**	
[mm]	**[inch]**	**[kg]**	**[ibs]**	**[kg]**	**[ibs]**	**[kg]**	**[ibs]**	**[kg]**	**[ibs]**	**[kg]**	**[ibs]**	**[kg]**	**[lbs]**	**[kg]**	**[lbs]**
15	½	-	-	-	-	4	9	4	9	4	9	5	11	4.18	9.22
25	1	-	-	-	-	6	12	5	11	4	9	5	11	5.68	12.52
40	1½	-	-	-	-	8	18	7	15	7	15	8	17	7.52	16.58
50	2	-	-	9	20	-	-	8	20	9	20	9	20	8.18	18.03
65	2½	-	-	10.7	24	-	-	11	24	10.7	24	11	24	9.44	20.81
80	3	-	-	11.6	26	-	-	13	28	11.6	26	12	26	10.46	23.06
100	4	-	-	15.2	33	-	-	19	41	15.2	33	16	35	13.7	30.20
125	5	-	-	20.4	45	-	-	24	52	-	-	19	42	20.22	44.58
150	6	-	-	26	57	-	-	29	64	26	57	27	60	24.1	53.13
200	8	48	106	48	106	-	-	56	124	48	106	40	88	43.42	95.72
250	10	64	141	69	152	-	-	79	174	69	152	60	132	63.64	140.30
300	12	76	167	86	189	-	-	110	243	86	189	80	176	72.62	160.01
350	14	104	229	125	274	-	-	139	307	115	254	110	242	-	-
400	16	119	263	143	314	-	-	159	351	125	277	125	275	-	-
450	18	136	299	173	381	-	-	182	400	141	311	175	385	-	-
500	20	163	359	223	491	-	-	225	495	189	418	200	440	-	-
600	24	236	519	338	744	-	-	320	704	301	664	287	633	-	-
700	28	270	595	314	692	-	-	273	602	320	704	330	728	-	-
750	30	-	-	-	-	-	-	329	725	-	-	360	794	-	-
800	32	346	763	396	873	-	-	365	804	428	944	450	992	-	-
900	36	432	951	474	1043	-	-	495	1089	619	1362	530	1168	-	-
1000	40	513	1130	600	1321	-	-	583	1282	636	1399	660	1455	-	-
	42	-	-	-	-	-	-	687	1512	-	-	-	-	-	-
	44	-	-	-	-	-	-	763	1680	-	-	1140	2513	-	-
1200	48	643	1415	885	1948	-	-	861	1896	813	1789	1180	2601	-	-
1400	54	1592	3510	-	-	-	-	-	-	-	-	1600	3528	-	-
1500	60	-	-	-	-	-	-	-	-	-	-	2460	5423	-	-
1600	66	2110	4652	-	-	-	-	-	-	-	-	2525	5566	-	-
1800	72	2560	5644	-	-	-	-	-	-	-	-	2930	6460	-	-
2000	78	3640	8025	-	-	-	-	-	-	-	-	3665	8080	-	-

With transmitter MAG 5000 and MAG 6000 compact, weight is increased by approximately 0.8 kg (1.8 lbs), with MAG 6000 I, weight is increased by 5.5 kg (12.1 lb).

© Siemens 2020

SITRANS FM100

Overview

The SITRANS FM100 is an electromagnetic flow sensor in a compact design for basic applications in the process and OEM industry.

Benefits

- Connection ½", ¾", 1", 2"
- Flow- and temperature measurement
- IO-Link communication
- Dosing function with external control output
- Colored, multi-parameter configurable TFT display, rotatable 90°
- Bidirectional measuring
- Intuitive setup menu via 4 optical touch keys
- 2 freely configurable outputs
- All-metal design: stainless steel
- Included in Quick Ship Program (delivery time see PIA LCP)

Application

The main applications of the SITRANS FM electromagnetic flow sensors can be found in the following fields:

- OEM industry
- Process industry
- Small water cycles: e.g. cooling water, water leakage
- Dosing e.g. in chemical industry

Design

The SITRANS FM100 is designed to measure small- and medium sized flow of conductive liquids. The small build in length of 108 mm allows to fit the device in almost any space. The robust stainless-steel housing protects the device in changing surroundings.

The measurement is displayed on the local screen as well as accessible via 2 freely configurable outputs (pulse-/frequency-/alarm- and analogue).

Mode of operation

The flow measuring principle is based on Faraday's law of electromagnetic induction according to which the sensor converts the flow into an electrical voltage proportional to the velocity of the flow.

Integration

Pressure loss

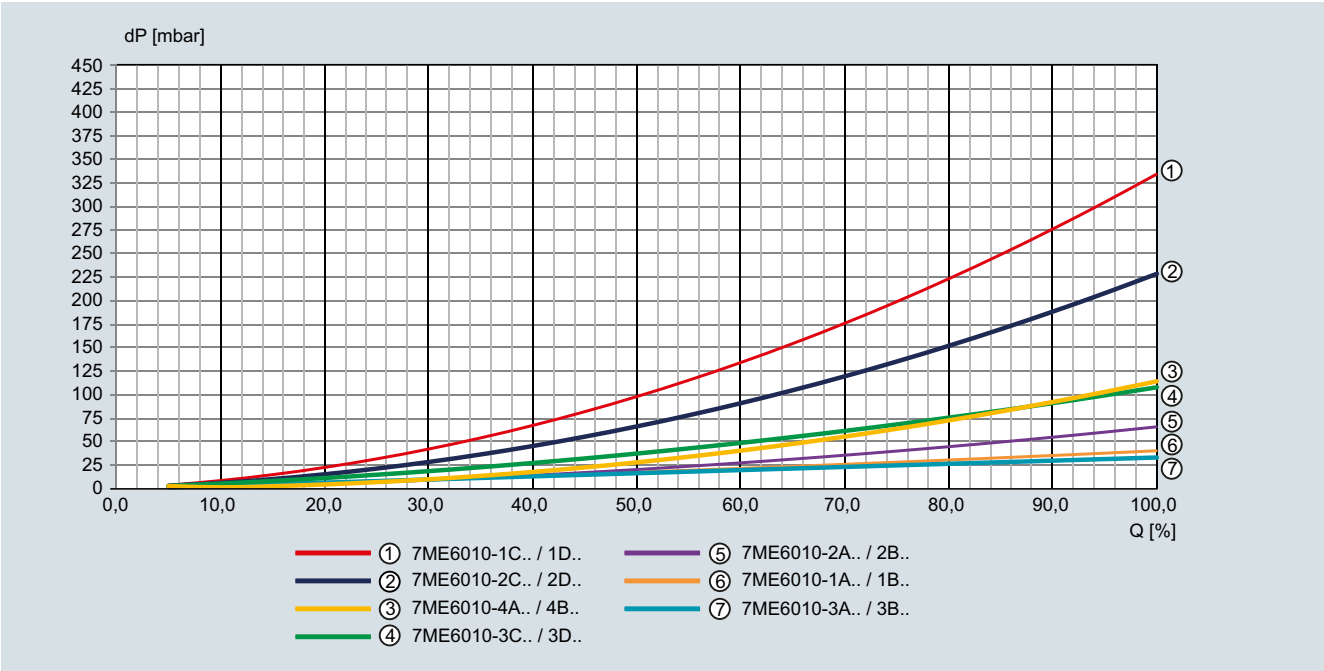

© Siemens 2020

Technical specifications

Product characteristic	FM100
Measuring principle	Electromagnetic induction
Media	Conductive liquid with ≥ 20 µS/cm
Accuracy	< ±(0.8 % of reading + 0.5 % of full scale)[1]
Repeatability	±0.2 % of full scale
Response time flow t_{90}	
• Alarm/pulse/frequency output	< 100 ms
• Current output	< 1 s
Temperature measurement	
Sensor	PT1000
Accuracy	≤ ±2 °C (flow > 0.2 m/s)
Measuring range	Temperature range of media
Response time temperature t_{90} (signal output)	< 20 s
Process connection	
Nominal size	G ½" … G 2" Compatible NPT adapter available (¼" … 2")
Process connection	Threaded fitting
Rated operation conditions	
Mounting position	In all directions, bidirectional measuring
In-/outlet	3 × diameter / 2 × diameter
Ambient temperature	
• Standard compact sensor	-20 … +70 °C (-4 … +158 °F)
• Remote version with ETFE-Cable	-20 … +140 °C (-4 … +284 °F)
• Remote version with PVC-Cable	-20 … +85 °C (-4 … +185 °F)
Enclosure rating	IP67
Operating pressure	Max. 16 bar
Pressure drop	See pressure loss diagram
Mechanical load	
• Shock resistance	DIN EN 60068-2-27:2010: 20 g (11 ms)
• Vibration resistance	DIN EN 60068-2-6:2008: 5 g (10 … 2 000 Hz)
• Environmental testing	DIN EN 60068-2-30:2006: severity level b
EMC	2014/30/EU
Design	
Weight	See dimensional drawings
Housing material	Stainless steel 1.4404
Electrode material	Stainless steel 1.4404
Connection fitting	Stainless steel 1.4404
Insulation parts	PEEK
Seals	FKM (Option: EPDM)
Display	PMMA Operation via 4 optical touch sensors (operation with hand gloves) TFT display, 128 × 128 pixels, 1.4" display, orientation in 90° steps adjustable, repetition rate adjustable 0.5 … 10 s
Cable entries	M12x1 4-pin connection
Dimensions	See dimensional drawings

Electrical data	
Power supply	19 … 30 V DC
Power consumption	Max. 200 mA
Outputs	
• Frequency	Push-Pull, freely scalable, 2kHz @ overflow f_{min} @ FS = 50 Hz f_{max} @ FS = 1 000 Hz
• Pulse	Push-Pull, freely scalable, configurable for partial and accumulated totalizer
• Alarm	NPN, PNP, Push-Pull, configurable max. 30 V DC, max. 200 mA short-circuit proof
• Current	0(4) … 20 mA (active) or 0(2) … 10 V DC Max. load 500 Ω
Input	
• Control	Active signal U_{high} max. 30 V DC 0 < Low < 10 V DC 15 V DC < High < Vs
Dosing function	Dosing output OUT2: Push-Pull, High active Control input OUT1: START/STOP 0.5 s < t_{high} < 4 s RESET t_{high} > 5 s
Communication	**IO-Link**
• Manufacturer ID	42 (decimal), 0x002A (hex)
• Manufacturer name	Siemens AG
• Version	V1.1
• Bitrate	COM3
• Minimal cycle time	1.1 ms
• SIO-Mode	Yes (OUT1 in configuration IO-Link)
• Block parameterization	Yes
• Operational readiness	10 s
• Max. cable length	20 m

[1] Under reference conditions:
- Media temperature: 15 … 30 °C
- Ambient temperature: 15 … 30 °C
- 1 cST
- 500 µS/cm
- 1 bar

© Siemens 2020

Selection and ordering data

	Article No.						
SITRANS FM100 flowmeter ↗	**7ME6010-**	■	■	■	■		**0**
↗ Click on the Article No. for the online configuration in the PIA Life Cycle Portal.							
Process connection, measuring range							
Male thread G1/2", 0.03 … 3 l/min				**1**	**A**		
Male thread G1/2", 0.25 … 48 gal/h				**1**	**B**		
Male thread G1/2", 0.04 … 10 l/min				**1**	**C**		
Male thread G1/2", 0.011 … 2,6 gal/min				**1**	**D**		
Male thread G3/4", 0.1 … 25 l/min				**2**	**A**		
Male thread G3/4", 0.025 … 6,6 gal/min				**2**	**B**		
Male thread G3/4", 0.2 … 50 l/min				**2**	**C**		
Male thread G3/4", 0.053 … 13 gal/min				**2**	**D**		
Male thread G1", 0.2 … 50 l/min				**3**	**A**		
Male thread G1", 0.053 … 13 gal/min				**3**	**B**		
Male thread G1", 0.4 … 100 l/min				**3**	**C**		
Male thread G1", 0.1 … 26 gal/min				**3**	**D**		
Male thread G2", 1.5 … 350 l/min				**4**	**A**		
Female thread 2" NPT, 0.4 … 92 gal/min				**4**	**B**		
Transmitter design							
Compact design without cable						**A**	
Gasket material							
FKM/FPM							**0**
EPDM							**1**

© Siemens 2020

Dimensional drawings

SITRANS FM100 flowmeter with compact transmitter

Process connection G1/2", G3/4" and G1

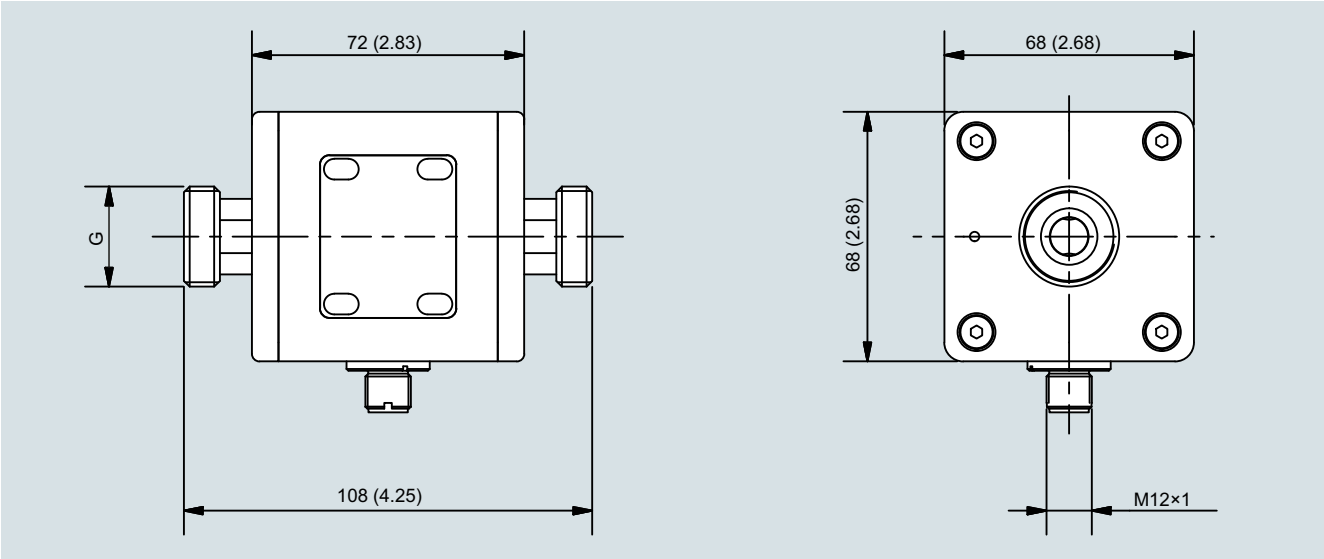

SITRANS FM100 with compact transmitter, process connection G1/2", G3/4" and G1"; dimensions in mm (inch)

Process connection	Nominal size	Weight (g)
Male thread	G1/2"	998
Male thread	G3/4"	988
Male thread	G1"	1010

Process connection G2"

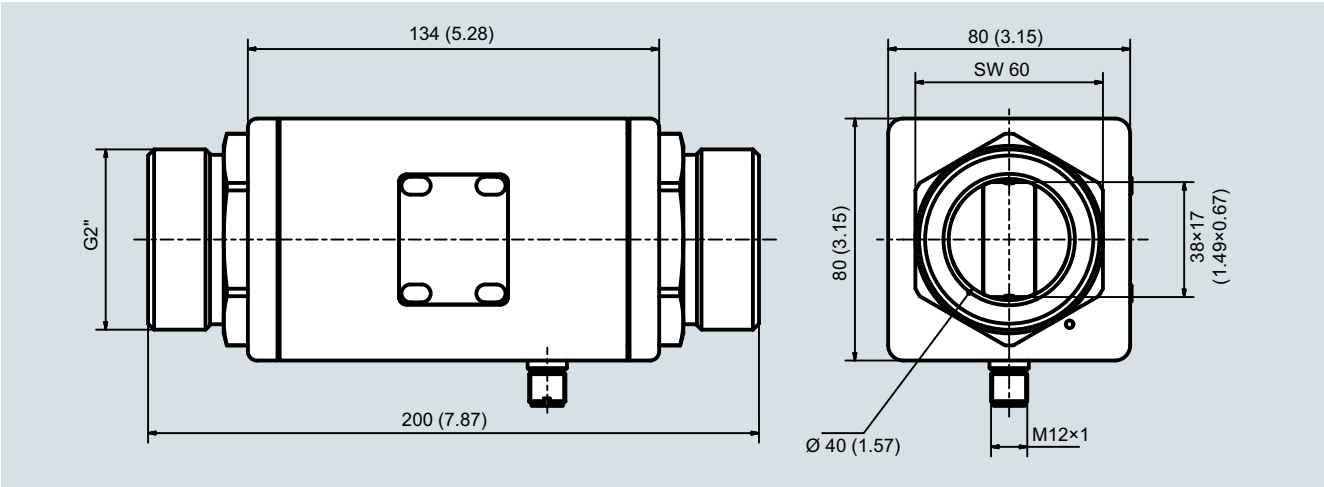

SITRANS FM100 with compact transmitter, process connection G2"; dimensions in mm (inch)

Process connection	Nominal size	Weight (g)
Male thread	G2"	2420

© Siemens 2020

Dimensional drawings (continued)

Process connection 2" NPT IG

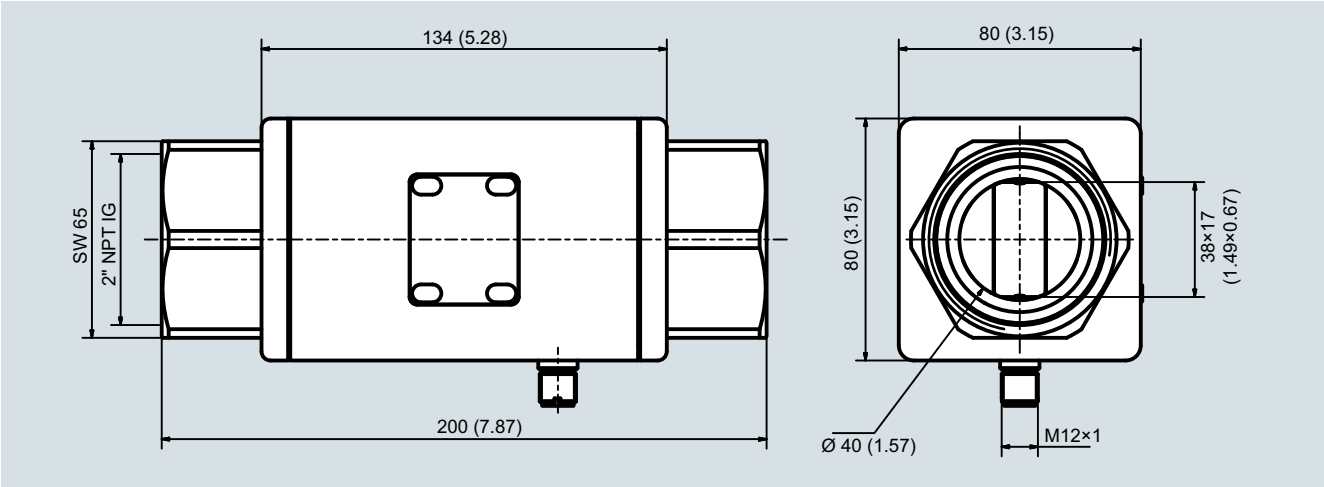

SITRANS FM100 with compact transmitter, process connection 2" NPT (female); dimensions in mm (inch)

Process connection	Nominal size	Weight (g)
Female thread	2" NPT IG	2140

SITRANS FM100 inner diameters

Connection, nominal size	Inside diameters (DN)	Range
G1/2"	5 mm	0.03 ... 3 l/min / 0.04 ... 10 l/min
G3/4"	10 mm	0.1 ... 25 l/min / 0.2 ... 50 l/min
G1"	15 mm	0.2 ... 50 l/min / 0.4 ... 100 l/min
2" NPT IG	see dimensional drawings	1.5 ... 350 l/min

© Siemens 2020

Overview

SITRANS FM TRANSMAG 2 with the SITRANS FM MAG 911/E sensor is a pulsed alternating field magnetic flowmeter where the magnetic field strength is much higher than conventional DC pulsed magnetic flowmeters.

Benefits

- Wide range of sizes DN 15 to DN 1000 (½" to 40")
- Broad range of liner and electrode materials for extreme process medias
- Fully welded construction provides a ruggedness that suits the toughest applications and environments.
- Automatic reading of SmartPLUG for easy commissioning
- Simple menu operation with two-line display
- Comprehensiv self-diagnostic with selfmonitoring and internal simulation

Application

The main applications of the SITRANS FM transmitter TRANSMAG 2 can be found in the following sectors:

- Pulp and Paper industry
- Mining industry

The patented pulse alternating field technology is ideal for difficult applications like:

- High concentrated paper stock > 3 %
- Heavy mining slurries up to 70 % solid concentration
- Mining slurries with magnetic particles.
- Low conductive medias ≥1 µS/cm (0.1 µS/cm depending on medium)

Design

- Available for remote mounting
- PROFIBUS PA (profile 2.0) / HART communication
- Analog output and digital outputs for pulses, device status, limits, flow direction, frequency output110

Mode of operation

The flow measuring principle is based on Faraday's law of electromagnetic induction according to which the sensor converts the flow into an electrical voltage proportional to the velocity of the flow.

© Siemens 2020

Transmitter TRANSMAG 2 with sensor MAG 911/E

Function

The TRANSMAG 2 is a microprocessor-based transmitter with a built-in alphanumeric display in several languages. The transmitters evaluate the signals from the associated electromagnetic sensors and also fulfill the task of a power supply unit which provides the magnet coils with a constant current.

The magnetic flux density in the sensor is additionally monitored by reference coils.

Further information on connection, mode of operation and installation can be found in the data sheets for the sensors.

Displays and keypads

Operation of the transmitter can be carried out using:

- Keypad and display unit
- HART communicator
- PC/laptop and SIMATIC PDM software via HART communication
- PC/laptop and SIMATIC PDM software using PROFIBUS PA communication

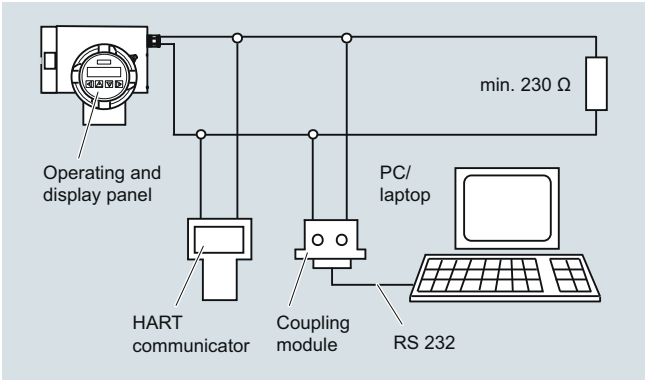

HART communication

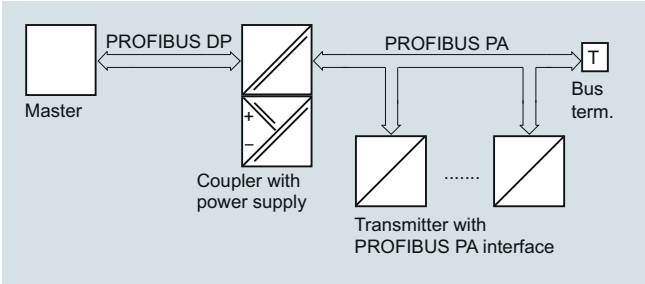

PROFIBUS PA communication

© Siemens 2020

Technical specifications

Transmitter TRANSMAG 2	
Mode of operation and design	
Measuring principle	Electromagnetic with pulsed alternating field (PAC)
Magnetic field excitation	Automatic power supply synchronization
• 50 Hz AC power supply	Bipolar (16.7 Hz) Bipolar with prepulse (10 Hz) Unipolar (8.33 Hz)
• 60 Hz AC power supply	Bipolar (20 Hz) Bipolar with prepulse (12 Hz) Unipolar (10 Hz)
Accuracy under reference conditions	
Measuring tolerance of pulse output	
• With v > 0.25 m/s (0.82 ft/s)	≤ ± 0.5 % of measured value ± 1.2 mm/s (0.05 inch/s)
• With v < 0.25 m/s (0.82 ft/s)	± 2.5 mm/s (0.1 inch/s)
Measuring tolerance of analog output	As pulse output plus ± 0.1 % conversion error ± 20 µA
Repeatability	0.2 % of measured value
Reference conditions	
• Process temperature	25 °C ± 5 °C (77 °F ± 9 °F)
• Ambient temperature	25 °C ± 5 °C (77 °F ± 9 °F)
• Warm-up time	Min. 30 min
• Installation conditions	Inlet pipe section ≥ 10 × DN Outlet pipe section ≥ 5 × DN Installed centered in pipe
• Medium	Water without gaseous or solid components
Calibration	
Default calibration, calibration report shipped with sensor	2 × 20 %, 2 × 50 % and 2 × 100 %
Outputs	
Electrical isolation	Outputs electrically isolated from one another and from the power supply, max. 60 V permissible against PE/equipotential bonding
Current output	0/4 … 20 mA (7ME5034-0…. or 7ME5034-2….)
• Signal	
- Upper limit	0/4 … 20 mA, selectable
- Failure	20 … 22.5 mA, optional 3.6; 20 or 24 mA
• Load	
- Output	max. 600 Ω, max. load voltage 15 V DC
- For HART communication	≥ 250 Ω
Communication	Via analog output with PC coupling module or HART communicator
• Protocol	HART, version 5.1
Digital output	
Signal	
• Output	Configurable as active or passive signals
- Active signal	24 V DC, ≤ 24 mA, R_i = 170 Ω
- Passive signal	Open collector, max. 30 V DC, 200 mA
Output configuration	
• Pulse	
- Pulse significance	≤ 5000 pulses/s
- Pulse width	≥ 0.1 ms
• Limit frequency	≤ 10000 Hz
• Limits	Limits for flow and quantity, flow direction, alarm
Digital output 2 (relay)	
(only 7ME5034-0…)	
Relay	NC or NO function
• Rating	Max. 5 W, max. 50 V AC/DC, max. 200 mA
• Output configuration	Limits for flow and quantity, flow direction, alarm

Transmitter TRANSMAG 2	
Digital input (optional to digital output 2)	Non-intrinsically-safe
(only 7ME5034-2…)	
• Input function configurable as high-active or low-active	Set measured value to zero or reset totalizer
• Signal voltage	Max. 30 V DC, R_i = 3 kΩ: High level: +11 … +30 V DC Low level: -30 … +5 V DC
For PROFIBUS devices	
PROFIBUS PA (for PROFIBUS-devices 7ME5034-1…)	
• Communication	Layer 1 and 2 according to PROFIBUS PA Transmission according to IEC 1158-2 Layer 7 (protocol layer) according to PROFIBUS PA and DP V1 (EN 50170) Device Class B, device profile 2.0 Max. 4 simultaneous C2 connections
• Bus voltage	9 … 32 V DC permissible
• Current consumption from bus	10 mA; limited to ≤ 15 mA in event of fault by electrical current limitation
Rated operating conditions	
Ambient temperature	
• Operation	-20 … +60 °C (-4 … +140 °F)
• Storage	-25 … +80 °C (-13 … +176 °F)
Degree of protection	IP67/NEMA 4X
Electromagnetic compatibility (EMC)	
• Emitted interference	To IEC/EN 61326 for use in industrial areas
• Noise immunity	To IEC/EN 61326 for use in industrial areas
Design	
Weight of transmitter	4.4 kg (9.7 lb)
Remote version	Transmitter must be connected to sensor using shielded cable
Maximum cable length	100 m (328 ft)
Housing	Die-cast aluminum, painted
Cables entries	Remote installations
• Power supply and outputs	2 x M20 (HART)/M25 (PROFIBUS) or 2 x ½" NPT (HART)
• Sensor connections	2 x M16 (HART) or 2 x ½" NPT
Displays and keypad	
General display	LCD, backlid, two lines with 16 characters each
Multi-display for	Flow, totalizer, flow velocity
Keypad	4 keys for entering parameters
Power supply	
corresponding to rating plate	
• AC supply	100 … 250 V AC ± 15 %, 47 … 63 Hz
• Power consumption	Approx. 120 … 630 VA, depending on sensor
Line fuse	100 … 230 V AC: T1.6A
Magnet current fuse	F5A/250 V

© Siemens 2020

Technical specifications (continued)

Sensor cables between sensor and transmitter

Sufficient shielding must be provided, as well as fixed routing of the signal cables (electrode and coil cable).

Signal cables must be routed free of vibration, and protected against strong magnetic and stray fields. In case of doubt, the sensor cables must be routed in grounded steel conduit. The cable length between the sensor and transmitter must not exceed 100 m (328 ft).

MAG 911/E sensor	
Process connection	
Flanges	
• EN 1092-1, raised face (EN 1092-1, DIN 2501 and BS 4504 have the same mating dimensions)	• DN 200 ... 1000 (8“ … 40“): PN 10 (145 psi) • DN 65 ... 1000 (2½“ … 40“): PN 16 (232 psi) • DN 200 ... 1000 (8“ … 40”): PN 25 (362 psi) • DN 15 ... 1000 (½“ … 40”): PN 40 (580 psi)
• ANSI B16.5 (BS 1560), raised face	• ½” ... 40”: Class 150 (20 bar (290 psi)) • ½” ... 24”: Class 300 (50 bar (725 psi))
• AWWA C-207, raised face	28” ... 40”: Class D (10 bar)
• JIS B 2220:2004	½” ... 24”: K10
Media conductivity	Minimum conductivity ≥ 1 µS/cm
Rated operating conditions	
Enclosure rating	IP67/NEMA 4X Optional IP68/NEMA 6
Temperature of medium	
• Soft rubber	0 … +70 °C (32 … 158 °F)
• Hard rubber	0 … +90 °C (32 … 194 °F) Option: 100°C (212°F)
• PTFE	-20 … +150 °C (-4 … +302 °F) at 25 bar (363 psi) -20 … +100 °C (-4 … +212 °F) at 40 bar (580 psi)
• Linatex	-40 … +70 °C (-40 … +158 °F) (for temperatures below -20 °C (-4 °F) AISI 316L/1.4404 flanges must be used)
• Novolac	130 °C (266 °F) at 40 bar (580 psi)
Design	
Weight	See dimensional drawings
Flange and housing material	Carbon steel ASTM A 105, with corrosion resistant coating Corrosivity category C3 acc. to ISO 12944-2, or AISI 316L/1.4404 flanges and carbon steel housing ASTM A105, with corrosion resistant coating Corrosivity category C3 according to ISO 12944-2
Measuring pipe material	Stainless steel AISI 304 or higher
Electrode material	• AISI 316/1.4571 • Hastelloy C276/2.4819 • Platinum • Titanium • Tantalum
Grounding electrode material	Defined via the order code
Terminal box (remote version only)	• Standard: Fibre glass reinforced polyamide • Option: Stainless steel AISI 316/1.4436
Cable entries	• 2 x M20 or 2 x ½" NPT

Protection ring		
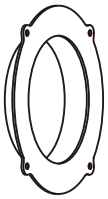	Function	To protect the edges of liners from abrasion (e.g. gravel, sand etc.). Used mainly with soft rubber liners and for PTFE liners at high temperatures from 100 to 150 °C (212 to 302 °F).
	Contact with medium	Yes, please always check resistance to measured medium.
	Material	Stainless steel AISI 316/1.4571, optionally Hastelloy C276/2.4819
	Material thickness	The overall length of the sensor is increased by 6 mm for DN 15 to DN 150 (0.24" for ½" to 6") or 10 mm for DN 200 to DN 600 (0.4" for 8" to 24")
	Standard	Optional for all liners. Must be ordered separately.
	Order No.	**7ME5942-...**

Grounding ring		
	Function	Electrical reference and grounding of the medium. Required if the pipelines are not electrically conducting or are lined (plastic pipelines, concrete pipelines etc.). All grounding rings must be connected to the grounding screw present on the sensor.
	Contact with medium	Yes, please always check resistance to measured medium.
	Material	Stainless steel AISI 316/1.4571 or Hastelloy C4/2.4610
	Material thickness	The overall length of the sensor is increased by 2 mm (0.08") per grounding ring.
	Standard	Optional for all liners. Required between the medium and sensor for equipotential bonding between non-conducting pipelines or lined pipelines.
	Order No.	**7ME5943-...**

Important:

The rings must be ordered together with the sensor. Gaskets are not included. In case of replacement please include the sensor MLFB code on the order.

© Siemens 2020

Technical specifications (continued)

Classification according to pressure equipment directive (PED 2014/68/EU)					
Nominal size		**Nominal pressure**		**Permissible media**	**Category**
DN	**(inches)**	**PN**	**(MWP psi)**		
15 … 25	(½" … 1")	40	580	Gases fluid group 1 and liquids fluid group 1	Article 4.3
200 … 300	(8" … 12")	10	(145)	Gases fluid group 1 and liquids fluid group 1	II
65 … 250	(2½" … 10")	16	(232)	Gases fluid group 1 and liquids fluid group 1	II
40 ... 100	(1½" … 4")	40	(580)	Gases fluid group 1 and liquids fluid group 1	II
350 … 1000	(14" … 40")	10	(145)	Gases fluid group 1 and liquids fluid group 1	III
300 … 1000	(12" … 40")	16	(232)	Gases fluid group 1 and liquids fluid group 1	III
200 … 600	(8" … 24")	25	(363)	Gases fluid group 1 and liquids fluid group 1	III
125 … 600	(5" … 24")	40	(580)	Gases fluid group 1 and liquids fluid group 1	III

Notes on pressure equipment directive

The devices are designed for liquids of danger group "Gases of fluid group 1". The categories differ according to the version, and are listed in the table below.

© Siemens 2020

Transmitter TRANSMAG 2 with sensor MAG 911/E

Selection and ordering data

	Article No.								
Transmitter TRANSMAG 2 ↗	**7ME5034-**								
Remote with standard wall mounting bracket, local display, die cast aluminum	■	A	A	1	1	-	■	A	A	0
↗ Click on the Article No. for the online configuration in the PIA Life Cycle Portal.									
Output/communication									
4 ... 20 mA with HART	0								
PROFIBUS PA	1								
4 ... 20 mA with HART and digital input	2								
Cable glands									
M20 x 1.5							1		
½" NPT							2		

Additional information	Order code
Please add "**-Z**" to Article No. and specify Order code(s) and plain text.	
Special mounting bracket for wall and pipeline installation	**A02**
Transmitter setting for parameter "TAG number" (specify in plain text, max. 8 characters)	**Y15**
Transmitter setting for parameter "TAG descriptor" (specify in plain text, max. 16 characters)	**Y16**
Tag name plate, stainless steel (specify in plain text)	**Y17**
Special version (specify in plain text)	**Y99**

	Article No.								
Sensor MAG 911/E ↗	**7ME5610-**								
	■	■	■	■	■	-	■	A	A	■
↗ Click on the Article No. for the online configuration in the PIA Life Cycle Portal.									
Nominal size									
DN 15 (½")	1	V							
DN 25 (1")	2	D							
DN 40 (1½")	2	R							
DN 50 (2")	2	Y							
DN 65 (2½")	3	F							
DN 80 (3")	3	M							
DN 100 (4")	3	T							
DN 125 (5")	4	B							
DN 150 (6")	4	H							
DN 200 (8")	4	P							
DN 250 (10")	4	V							
DN 300 (12")	5	D							
DN 350 (14")	5	K							
DN 400 (16")	5	R							
DN 450 (18")	5	Y							
DN 500 (20")	6	F							
DN 600 (24")	6	P							
DN 700 (28")	6	Y							
DN 800 (32")	7	H							
DN 900 (36")	7	M							
DN 1000 (40")	7	R							
Flange norm and pressure rating									
EN 1092-1, PN 10 (DN 200 ... 1000 (8" ... 40"))			B						
EN 1092-1, PN 16 (DN 65 ... 1000 (2½" ... 40"))			C						
EN 1092-1, PN 25 (DN 200 ... 1000 (8" ... 40"))			E						
EN 1092-1, PN 40 (DN 15 ... 1000 (½" ... 40"))			F						
ANSI B16.5, Class 150 (½" ... 24")[1]			J						
ANSI B16.5, Class 300 (½" ... 24")[2]			K						
AWWA C-207 Class D (28" ... 40")			L						
JIS 10 K (½" ... 24")			R						

	Article No.								
Sensor MAG 911/E	**7ME5610-**								
	■	■	■	■	■	-	■	A	A	■
Flange material									
Mid steel flanges 1.0460/1.0570				1					
Stainless steel flanges, AISI 316L/1.4404				3					
Liner material									
Soft rubber (DN 25 to DN 1000)					1				
PTFE (DN 15 to DN 600)					3				
Hardrubber (DN 15 to DN 1000)					4				
Linatex (DN 25 to DN 1000)					5				
Novolak (sealing material FFKM) (DN 50 to DN 1000)					6				
Electrode material									
AISI 316Ti/1.4571							1		
Hastelloy C276/2.4819							2		
Platinum							3		
Titanium							4		
Tantalum							5		
Cable glands/terminal box									
Metric: Polyamide terminal box									1
½" NPT: Polyamide terminal box									2
Metric: Stainless steel terminal box									3
½" NPT: Stainless steel terminal box									4

1) 20 °C (68 °F), max. 19.6 bar (285 psi) for steel flanges and max. 15.9 bar (231 psi) for stainless seel flanges

2) 20 °C (68 °F), max. 51.1 bar (741 psi) for steel flanges and max. 41.4 bar (600 psi) for stainless seel flanges

Additional information	Order Code
Please add "**-Z**" to Article No. and specify Order code(s) and plain text.	
Two grounding electrodes made of stainless steel AISI 316Ti/1.4571	**A02**
Two grounding electrodes made of Hastelloy C276/2.4819	**A04**
Two grounding electrodes made of Platinum	**A05**
Two grounding electrodes made of Titanum	**A06**
Two grounding electrodes made of Tantalum	**A07**
Factory certificate to EN 10204-2.2	**C14**
Material certificate according to EN 10204-3.1	**C16**
Power supply 110 V/60 Hz	**P01**
Flow range setting: Specify upper flow range value	**Y01**
Pulse output setting: Specify pulse value (1 puse/unit)	**Y02**
Silicon-free version	**Y04**
Tag name plate, stainless steel (specify in plain text)	**Y17**
Special version (specify in plain text)	**Y99**

© Siemens 2020

Selection and ordering data

	Article No.												
Cable kit for sensor MAG 911/E ↗	**7ME5930-**												Ord. code
	5	■	**A**	**0**	**0**	**-**	**0**	**A**	**A**	**0**		■	■	■
↗ Click on the Article No. for the online configuration in the PIA Life Cycle Portal.													
Cable													
Cable kit for sensor MAG 911/E, coil cable 3 × 1.0 mm² (3 × 0.0016 inch²), electrode cable 7 × 0.5 mm² (7 × 0.0008 inch²), single shielded with PVC jacket													
• Length: 5 m (16.4 ft)		**B**											
• Length: 10 m (32.8 ft)		**C**											
• Length: 20 m (65.6 ft)		**D**											
• Length: 30 m (98.4 ft)		**E**											
• Length: 40 m (131 ft)		**F**											
• Length: 50 m (164 ft)		**G**											
• Length: 60 m (197 ft)		**H**											
• Length: 80 m (260 ft)		**J**											
• Length: 100 m (328 ft)		**K**											
• Other length (specify in plain text) Please add "**-Z**" to Article No. and specify Order code(s) and plain text.		**Z**										**J**	**1**	**Y**

	Article No.												
Grounding and protection ring for sensor MAG 911/E													
Protection ring (2 pcs.) ↗	**7ME5942-**								■	■	■	■	■
Grounding ring (1 pc.) ↗	**7ME5943-**								■	■	■	■	■
↗ Click on the Article No. for the online configuration in the PIA Life Cycle Portal.													
Nominal size													
DN 15 (½")									**1**	**V**			
DN 25 (1")									**2**	**D**			
DN 40 (1½")									**2**	**R**			
DN 50 (2")									**2**	**Y**			
DN 65 (2½")									**3**	**F**			
DN 80 (3")									**3**	**M**			
DN 100 (4")									**3**	**T**			
DN 125 (5")									**4**	**B**			
DN 150 (6")									**4**	**H**			
DN 200 (8")									**4**	**P**			
DN 250 (10")									**4**	**V**			
DN 300 (12")									**5**	**D**			
DN 350 (14")									**5**	**K**			
DN 400 (16")									**5**	**R**			
DN 450 (18")									**5**	**Y**			
DN 500 (20")									**6**	**F**			
DN 600 (24")									**6**	**P**			
DN 700 (28")									**6**	**Y**			
DN 800 (32")									**7**	**H**			
DN 900 (36")									**7**	**M**			
DN 1000 (40")									**7**	**R**			
Flange design													
EN 1092-1, PN10											**B**		
EN 1092-1, PN16											**C**		
EN 1092-1, PN25											**E**		
EN 1092-1, PN40											**F**		
AISI B16.5, class 150											**J**		
AISI B16.5, class 300											**K**		
AWWA C-207, class D											**L**		
JIS B2220, 10K											**R**		
Material													
Stainless steel AISI 316/1.4571												**1**	
Hastelloy C4/2.4610												**2**	
Liner													
Soft rubber													**1**
PTFE													**3**
Hard rubber													**4**
Linatex													**5**
Novolak													**6**

3

© Siemens 2020

Selection and ordering data (continued)

Operating instructions for SITRANS FM TRANSMAG 2

Description	Article No.
• English	**A5E00102775**
• German	**A5E00102774**

All literature is available to download for free, in a range of languages, at
http://www.siemens.com/processinstrumentation/documentation

Accessories

Description	Article No.	
Standard wall-mounting bracket, stainless steel AISI 316L/1.4404	**7ME5933-0AC04**	
Special wall-mounting bracket, BI 2.5 DIN 59382 X6Cr17	**7ME5933-0AC05**	
Potting kit for IP68/ NEMA 6P sealing of sensor junction box	**FDK:085U0220**	

Spare parts

Description	Article No.	
Display unit	**7ME5933-0AC00**	
Display lid (Ex) in die-cast aluminum, with corrosion resistant coating (min. 60 mm)	**7ME5933-0AC01**	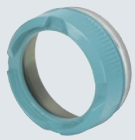
Blind lid for sensor cables connection compartment (only remote version) in die-cast aluminum, with corrosion resistant coating (min. 60 mm) incl. O-ring seal	**7ME5933-0AC02**	
Blind lid (mains supply, input/outputs) in die-cast aluminum, with corrosion resistant coating (min. 60 mm)	**7ME5933-0AC03**	
Safety clamp for electronic cover with glass plate (7ME5933-0AC01)	**7ME5933-0AC06**	
M20 cable gland set for power and output connection, gray PA plastic, 2 pcs. • cables Ø 6 ... 12 mm (0.24" ... 0.47") • -40 ... +100 °C (-40 ... +212 °F)	**A5E02246350**	
1/2" NPT cable gland set for power and output connection, gray PA plastic, 2 pcs. • cables Ø 6 ... 12 mm (0.24" ... 0.47") • -40 ... +100 °C (-40 ... +212 °F)	**A5E02246396**	
M16 x 1.5 cable gland set for sensor connection, brass chrome, 2 pcs. and 2 pcs. blind • cables Ø 5 ... 9 mm (0.20" ... 0.35") • -20 ... +105°C (-4 ... +221 °F)	**A5E02246369**	

© Siemens 2020

Dimensional drawings

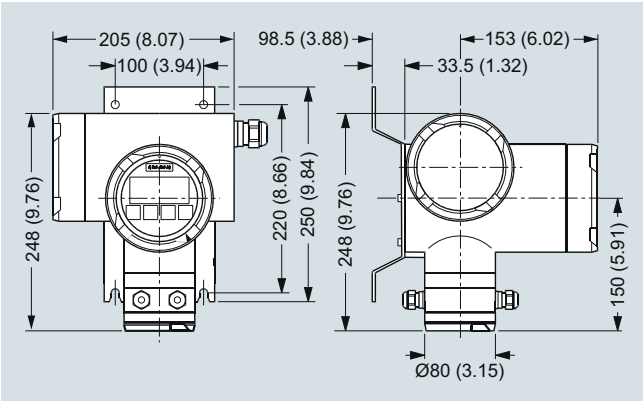

SITRANS FM transmitter TRANSMAG 2 with wall-mounting bracket, dimensions in mm (inch)

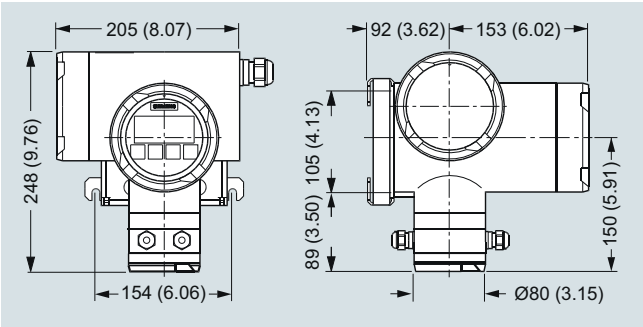

SITRANS FM transmitter TRANSMAG 2 with special wall-mounting bracket, dimensions in mm (inch)

© Siemens 2020

Dimensional drawings (continued)

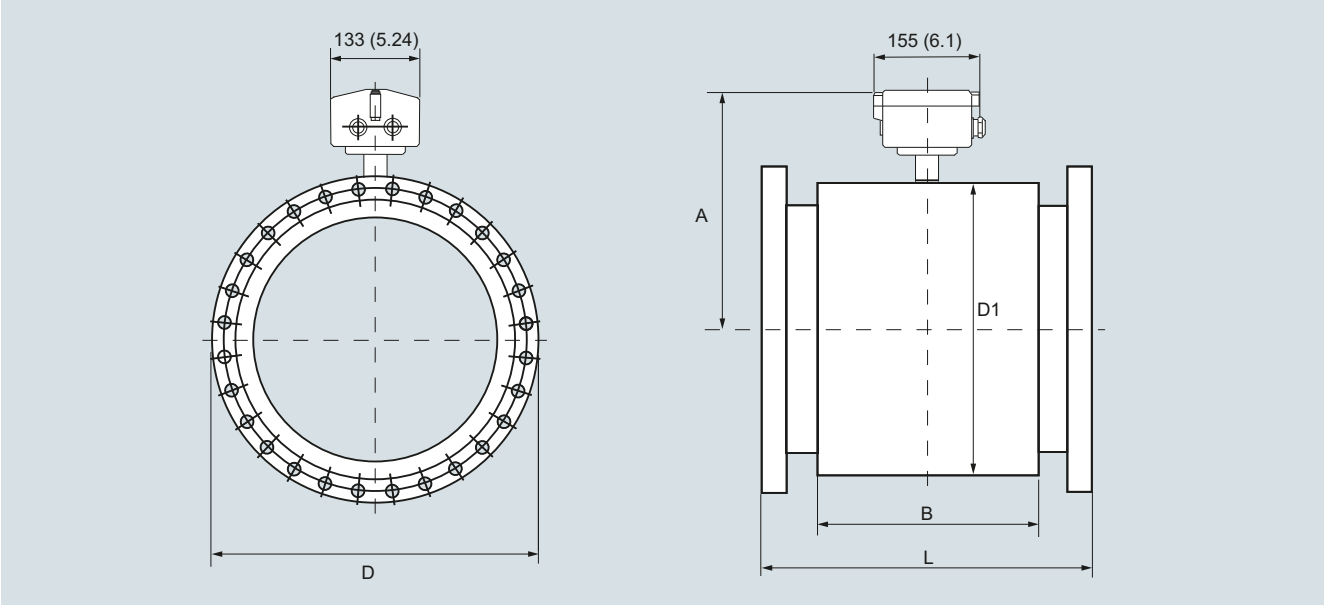

SITRANS FM flow sensor MAG 911/E, compact version, dimensions in mm (inch)

Built-in length MAG 911/E [in mm and inch]

Nominal size	DN 15	DN 25	DN 40	DN 50	DN 65	DN 80	DN 100	DN 125	DN 150	DN 200	DN 250
	½"	1"	1½"	2"	2½"	3"	4"	5"	6"	8"	10"
Built-in length L[1)]											
Hard rubber version Linatex/soft rubber version	270 (10.63)	270 (10.63)	280 (11.02)	280 (11.02)	330 (12.99)	340 (13.39)	340 (13.39)	370 (14.57)	370 (14.57)	410 (16.14)	470 (18.50)
PTFE-liner without protection rings	270 (10.63)	270 (10.63)	280 (11.02)	280 (11.02)	330 (12.99)	340 (13.39)	340 (13.39)	370 (14.57)	370 (14.57)	410 (16.14)	470 (18.50)
Novolak-version	-	-	275 (10.83)	275 (10.83)	325 (12.79)	335 (13.19)	333 (13.11)	362 (14.25)	362 (14.25)	401 (15.79)	460 (18.11)
Dimensions of sensor housing											
Housing width B	170 (6.69)	170 (6.69)	170 (6.69)	170 (6.69)	170 (6.69)	170 (6.69)	170 (6.69)	170 (6.69)	170 (6.69)	240 (9.45)	240 (9.45)
Height A	206 (8.11)	206 (8.11)	222 (8.74)	229 (9.02)	262 (10.32)	262 (10.32)	274 (10.79)	286 (11.26)	299 (11.78)	334 (13.15)	358 (14.10)
Housing diameter D_1	135 (5.35)	135 (5.35)	167 (6.58)	182 (7.17	247 (9.73)	247 (9.73)	272 (10.71)	296 (11.65)	322 (12.68)	392 (15.43)	440 (17.32)
Weight of PN 16 version in kg (MWP 232 psi version in lb) approx.	8.0 (17.64)	8.5 (18.74)	11.5 (25.35)	25.0 (55.12)	26 (57.32)	27 (59.53)	28 (61.73)	34 (74.95)	38 (83.78)	68 (149.9)	81 (178.6)

Nominal size	DN 300	DN 350	DN 400	DN 450	DN 500	DN 600	DN 700	DN 750	DN 800	DN 900	DN 1000
	12"	14"	16"	18"	20"	24"	28"	30"	32"	36"	40"
Built-in length L[1)]											
Hard rubber version Linatex/soft rubber version	500 (19.68)	550 (21.65)	600 (23.62)	650 (25.59)	650 (25.59)	780 (30.71)	910 (35.83)	910 (35.83)	1040 (40.95)	1170 (46.06)	1300 (51.18)
PTFE-liner without protection rings	500 (19.68)	550 (21.65)	600 (23.62)	660 (25.98)	650 (25.59)	780 (30.71)	-	-	-	-	-
Novolak-version	489 (19.25)	538 (21.18)	592 (23.31)	638 (25.12)	638 (25.12)	772 (30.39)	903 (35.55)	903 (35.55)	1033 (40.63)	1163 (45.79)	1293 (50.91)
Dimensions of sensor housing											
Housing width B	240 (9.45)	225 (8.86)	250 (9.84)	270 (10.63)	300 (11.81)	360 (14.17)	420 (16.54)	420 (16.54)	500 (19.69)	560 (22.05)	620 (24.41)
Height A	383 (15.08)	375 (14.76)	400 (15.75)	433 (17.05)	453 (17.84)	505 (19.88)	558 (21.97)	590 (23.23)	608 (23.94)	658 (25.91)	713 (28.07)
Housing diameter D_1	490 (19.29)	474 (18.66)	524 (20.63)	591 (23.26)	629 (24.76)	734 (28.90)	839 (33.03)	904 (35.59)	939 (36.97)	1039 (40.91)	1150 (45.28)
Weight of PN 16 version in kg (MWP 232 psi version in lb) approx.	95 (209.4)	118 (260.2)	161 (354.9)	185 (407.9)	233 (513.7)	401 (884.1)	420 (925.9)	450 (992.1)	500 (1102.3)	560 (1234.6)	620 (1366.9)

1) Tolerance for built-in lenght: L + 0.0 mm/-4.0 mm (-0.00/-0.157 inches).
With protection rings for > DN 25 +6.0 mm, > DN 200 +10.0 mm (> 1" +0.236 inches, > 8" +0.394 inches)

© Siemens 2020

Overview

MAG 8000 is a comprehensive meter which intelligent information and high performance measurement as well as the easy to install concept take cost of ownership and customer service to a new level for water meter.

Benefits

Easy to install

- Compact or remote solution with factory mounted cable and customer setting from factory
- IP68/NEMA 6P enclosure. Sensor can be buried.
- Flexible power supply - internal or external battery pack or mains power supply with battery back-up possibilities
- Superior measurement
- Down to 0.2 % maximum uncertainty
- OIML R 49 type approval
- FM Fire Service Approval
- Bi-directional measurement

Long lasting performance/Low cost of Ownership

- No moving parts means less wear and tear.
- Up to 6 to 10 years maintenance-free operation in typical revenue application
- Robust construction built for the application

Intelligent information, easy to access

- Embedded self-testing and alarm/fault detection feature
- Internal data logger
- Advanced statistics and diagnostics
- Various Add-on communication modules

Application

The following MAG 8000 versions are available as stand-alone water meters:

- MAG 8000 (7ME6810) for abstraction and distribution network
- MAG 8000 CT (7ME6820) for revenue and bulk metering

Design

MAG 8000 is designed to minimize power consumption.

The product program consists of

- Basic and advanced version
- Sensor sizes from DN 25 to 1200 (1" to 48")
- Compact and remote installation in IP68/NEMA 6P enclosure and factory-mounted cable
- SIMATIC PDM and Flow Tool PC configuration softwares

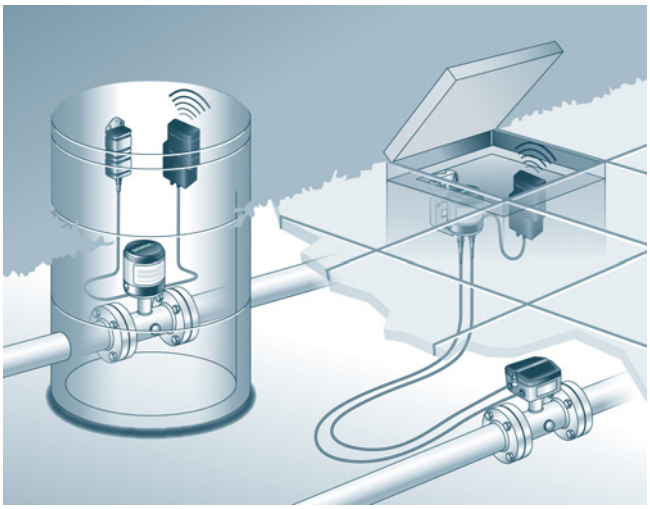

Modbus/Encoder module

© Siemens 2020

Battery-operated water meter MAG 8000

Function

MAG 8000 is a microprocessor-based water meter with graphical display and key for optimum customer operation and information on site. The transmitter drives the magnetic field in the sensor, evaluates the flow signal from the sensor and calculates the volume passing through. It delivers the required information via the integrated pulse output or communication interfaces as part of a system solution. Its intelligent functionality, information and diagnostic ensure optimum meter performance and information to optimize water supply and billing.

MAG 8000 can be ordered as a Basic or an Advanced version.

Features/Version	MAG 8000 Basic	MAG 8000 Advanced
Measuring frequency in battery power mode (Manually selected)[1]	1/15 or 1/30 or 1/60 Hz	from 6.25 to 1/60 Hz depending of sensor size
Output MAG 8000	2 FW/RV/AI/CA	2 FW/RV/AI/CA
Communication	Add-on	Add-on
Data logger	Yes	Yes
Insulation test	Yes	Yes
Leakage detection	No	Yes
Meter utilization	No	Yes
Statistics	No	Yes
Tariff	No	Yes
Settle date (Revenue)	No	Yes

[1] Excitation frequency settings with mains power supply, see technical specifications for each version:

Some information is accessible via the display whereas all information is accessible via the IrDA communication interface with the PDM software. Data and parameters are registered in a EEPROM. They can all be read, but changing the information demands a software password or a hardware key attached to the printed circuit board.

The SIMATIC PDM tool gives the possibility of testing and verifying the flowmeter on site and creating a printed "Qualification Certificate" with all specific data that define the quality status of the measurement.

The Qualification Certificate consists of two pages with information about the actual status of the sensor:

Part 1 provides general settings, sensor and battery info, totalizer values and pulse output settings.

Part 2 provides detailed information about electronic and sensor functionality and a main parameter list for evaluating the functionality of the MAG 8000 water meter.

SIMATIC PDM

For more details about SIMATIC PDF please go to chapter 8 "Digitalization and Communication".

© Siemens 2020

Technical specifications

Transmitter	
Installation	Compact (integral) Remote with factory-mounted cable 5, 10, 20 or 30 m (16.4, 32.8, 65.6 or 98.4 ft)
Enclosure	Stainless steel top housing (AISI 316) and coated brass bottom. Remote wall mount bracket in stainless steel (AISI 304).
Cable entries	2 × M20 (one gland for one cable of size 6 … 8 mm (0.02 … 0.026 ft) is included in the standard delivery)
Display	Display with 8 digits for main information Index, menu and status symbols for dedicated information
Resolution	Totalized information can be displayed with 1, 2 or 3 decimals or automatic adjustment (default)
Flow unit	
Europe	Volume in m^3 and flow rate in m^3/h
US	Volume in Gallon and flow rate in GPM
Australia	Volume in Mi and flow rate as Ml/d
Optional display units	Volume: m^3 × 100, l × 100, G × 100, G × 1000, MG, CF × 100, CF × 1000, AF, Al, kl, BBL42 Flow: m^3/min, m^3/d, l/s, l/min, GPS, GPH, GPD, MGD, CFS, CFM, CFH, BBL42/s, BBL42/min, BBL42/h, BBL42/d
Digital output	2 passive outputs (MOS), individual galvanically isolated Maximum load ± 35 V DC, 50 mA short circuit protected
Output A function	Programmable as pulse volume – forward – reverse – forward/net – reverse/net
Output B function	Programmable as pulse volume (like output A), alarm
Output	Max. pulse rate of 50 Hz (pulse B) and 100 Hz (pulse A), pulse width of 5, 10, 50, 100, 500 ms

Transmitter	
Communication	IrDA: Standard integrated infrared communication interface with Modbus RTU protocol
Add-on modules	• RS 232 serial interface with Modbus RTU (Rx/Tx/GND), point to point with max. 15 m cable • RS 485 serial interface with Modbus RTU (+/-/GND), multidrop with up to 32 devices with max. 1000 m cable • Encoder interface module (for Itron 200WP) "Sensus protocol" • 3G/UMTS module with or without analog input cable
Power supply	Auto detection of power source with display symbol for operation power
Internal battery pack	1 D-Cell 3.6 V/16.5 Ah 2 D-Cell 3.6 V/33 Ah
External battery pack	4 D-Cell 3.6 V/66 Ah
Mains power supply	12 … 24 V AC/DC (10 … 32 V) 2 VA 115 … 230 V AC (85 … 264 V) 2 VA Both mains power supply systems are upgradable for battery backup via internal D-Cell (3.6 V 16.5 Ah) or external battery pack.
Cable	3 m (9.8 ft) for external connection to mains supply (without cable plug)

© Siemens 2020

Technical specifications (continued)

Features	
Application identification	Tag number up to 15 characters
Time and date	Device embedded Real Time Clock (Synchronization with NTP server if 3G/UMTS module connected)
Totalizer	
MAG 8000	Totalizer 1 and Totalizer 2: Configurable to Forward, Reverse and Bidirectional netflow Totalizer 3: (following totalizer 1 setting) resetable via display key
Measurement	
Low flow cut-off	
• 7ME6810	Cut-off at 15 mm/s[1)]
• 7ME6820	Cut-off at 15 mm/s[1)]
Empty pipe detection	Symbolised in display
Data logger	Logging of 26 records: selectable as daily, weekly or monthly logging
Alarm	Active alarm is indicated on the display.
Data protection	All data stored in an EEPROM. Totalizers 1 and 2 are backed up every 10 min, statistic every hour and power consumption and temperature measurement every 4 hours. Password protection of all parameters and hardware protection of calibration and revenue parameters.
Battery power management	Optimal battery information on remaining capacity. Calculated capacity includes all consuming elements and available battery capacity is adjusted related to change in ambient temperature. Numbers of power-ups Date and time registered for first and last time power alarm.
Diagnostic	
Continuous self test including	Coil current to drive the magnetic field Signal input circuit Data calculation, handling and storing
Alarm statistics and logging for fault analyzing	Electrode impedance to check actual media contact Flow simulation to check pulse and communication signal chain for correct scaling Number of sensor measurements (excitations) Transmitter temperature (battery capacity calculation) Low impedance alarm for change in media Flow alarm when defined high flow exceeds Verification mode for fast measure performance check
Insulation test	Test of signal immunity against disturbance and bad installation. Test interval is selectable and measurement is interrupted during the test period of 4 min.

Features	
Leakage detection (only Advanced version)	Monitoring the lowest flow or volume during selected time window within 24 hours. Leakage is detected over a selectable period where monitored value exceed the possible leakage level. Min. and max. values are stored with date registration. Last store value visible on the display.
Meter Utilization (only Advanced version)	6 registers for monitoring total time the meter has operated in different flow intervals. Registered intervals are free selectable as % of Q_n (Q3).
Tariff (only Advanced version)	6 tariff registers count the volume delivered within the selected tariff windows, based on time of day or flow rates or a combination. Tariff can also be used for consumption profile where consumption is related to different time intervals or flow rates. Tariff values visible on the display.
Settling date (only Advanced version)	On a predefined date the totalizer 1 index value is stored. Old values are stored to show the latest two totalized 1 index values. Settling values visible on the display.
Statistic (only Advanced version)	Min. flow rate with time and date registration Max. flow rate with time and date registration Min. daily consumption with date registration Max. daily consumption with date registration Latest 7 days total and daily consumption Actual month consumption Latest month consumption
PC Configuration Software PDM	• Meter configuration – online and offline mode • Own parameter settings • Parameter documentation • Print and export of data and parameters PDM 9.0/9.1 Service Pack 1

[1)] Siemens warrants the measurement accuracy down to a flow velocity of 15 mm/s. For a flow velocity below 15 mm/s, we don't warrant the measurement accuracy.

© Siemens 2020

Technical specifications (continued)

MAG 8000 water meter uncertainty

To ensure continuous accurate measurement, flowmeters must be calibrated. The calibration is conducted at Siemens flow facilities with traceable instruments referring directly to the physical unit of measurement according to the International System of Units (SI).

Therefore, the calibration certificate ensures recognition of the test results worldwide, including the US (NIST traceability).

Siemens offers accredited calibrations assured to ISO 17025 in the flow range from 0.0001 m^3/h to 10 000 m^3/h. Siemens Flow Instruments accredited laboratories are recognized by ILAC MRA (International Laboratory Accreditation Corporation - Mutual Recognition Arrangement) ensuring international traceability and recognition of the test results worldwide.

The selected calibration determines the accuracy of the meter. A standard calibration results in max. ± 0.4 % uncertainty and an extended calibration ± 0.2 %. A calibration certificate follows every sensor and calibration data are stored in the meter unit.

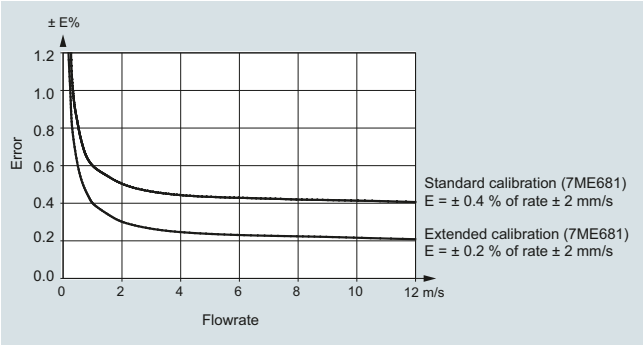

MAG 8000 (7ME6810) for Fire Service applications

MAG 8000 (7ME6810) is FM Fire Service approved for automatic fire protection systems according to the Fire Service Meters Standard, Class Number 1044. The approval is applicable for the sizes DN 50, DN 80, DN 100, DN 150, DN 200, DN 250, and DN 300 (2", 3", 4", 6", 8", 10", and 12") with ANSI B16.5 Class 150 flanges. The FM Fire Service approved product can be ordered via the Z-options P20, P21 and P22.

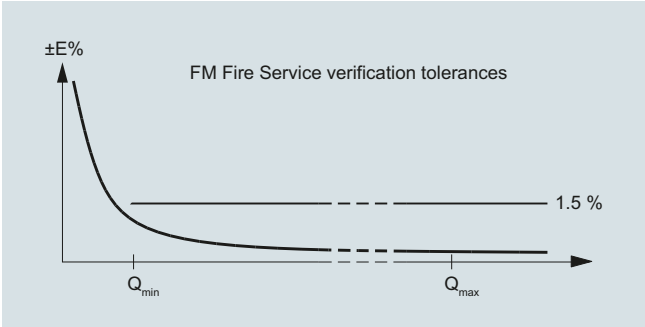

Grounding

The sensor body must be grounded using grounding straps and/or grounding rings to protect the flow signal against stray electrical noise. This ensures that the noise is carried through the sensor body and a noise-free measuring area within the sensor body. For MAG 8000 Irrigation grounding rings on both sides are factory-mounted.

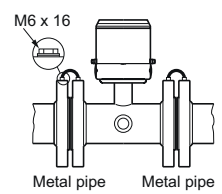

Metal pipes

On metal pipes, connect the straps to both flanges.

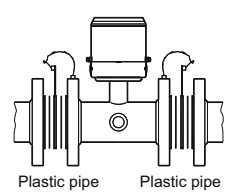

Plastic pipes

On plastic pipes and lined metal pipes, optional grounding rings must be used at both ends.

Grounding rings has to be ordered separately see “grounding ring kit”

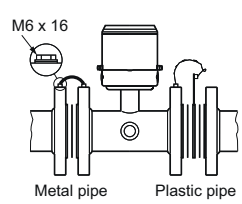

Combination of metal and plastic pipes

A combination of metal and plastic requires straps for metal pipe and grounding rings for plastic pipe.

© Siemens 2020

Technical specifications (continued)

Battery operation time and calculation

The battery operation time depends on the connected battery pack as well as the operation condition of the meter.

MAG 8000 calculates the remaining capacity every 4 hours and includes all consuming elements. Calculation compensates for temperature influence on battery capacity.

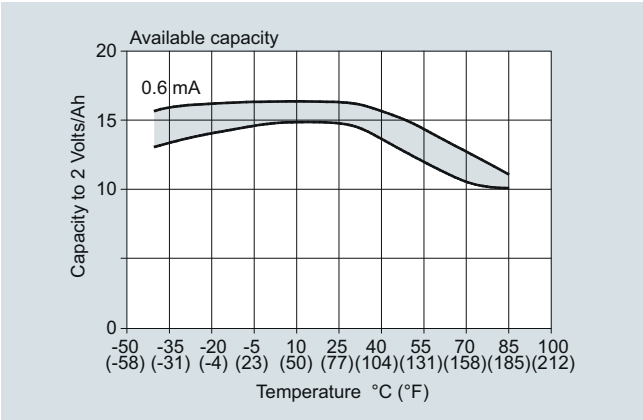

The grafic shows the effect from other temperatures. A variation in temperature from 15 °C to 55 °C (59 to 131 °F) reduces the capacity by 17 % in the table from 15 Ah to 12.5 Ah.

At typical revenue scenario of expected battery operation time can be seen in the table below.

The measurement for calculating the rest capacity of the battery life time is only completed if the system has no active fatal faults or the empty pipe is active. Maximum battery specification is 10 years operation.

Scenario - Revenue application	
Output A	Pulse rate max. 10 Hz
Output B	Alarm or call-up
Meter dialog	1 hour per month
Add-com	None
Temperature profile	• 5 % at 0 °C (32 °F) • 80 % at 15 °C (59 °F) • 15 % at 50 °C (122 °F)

Battery lifetime (subject to the assumptions mentioned above)

MAG 8000 for abstraction and distribution network applications (7ME6810) and MAG 8000 CT for revenue and bulk metering (7ME6820)								
Excitation frequency (24 h operation)		**1/60 Hz**	**1/30 Hz**	**1/15 Hz**	**1/5 Hz**	**1.5625 Hz**	**3.125 Hz**	**6.25 Hz**
2 D-Cell battery 33 Ah Internal battery pack	DN 25 … 150 (1" … 6")	9 years	9 years	7 years	43 months	8 months	3 months	2 months
	DN 200 … 600 (8" … 24")	9 years	6 years	4 years	22 months	3 months	1 month	N/A
	DN 700 … 1200 (28" … 48")	7 years	4 years	2 years	12 months	1 months	N/A	N/A
4 D-Cell battery 66 Ah External battery pack	DN 25 ... 150 (1" ... 68")	15 years	15 years	14 years	86 months	16 months	7 months	4 months
	DN 200 ... 600 (8" ... 24")	15 years	13 years	8 years	44 months	7 months	3 months	N/A
	DN 700 ... 1200 (28" ... 48")	14 years	9 years	5 years	24 months	3 months	N/A	N/A

Typical battery lifetime scenario for MAG 8000 with 3G module Transmission once a day and MAG 8000 factory settings	
2 D-Cell battery 33 Ah Internal battery pack	3 ... 4 years
4 D-Cell battery 66 Ah External battery pack	7 ... 8 years

External battery pack can be used as battery backup for mains power supply (if two cable entries in one cable gland are needed, order cable glands with two entries, see accessories on page 3/141)

Serial RS 232/RS 485 add-on communication modules are designed for mains powered systems as the battery operation time will be reduced. At 1 hour communication per month (all meter data collected 2 times per day) and the module is connected, the operation time is reduced to:

- RS 232:
  - Switched on constantly:
    6.4 months for 2 D-cell internal battery pack / 12.8 months for 4 D-cell ext. battery pack
  - Switched on 2 s/day:
    39 months for 2 D-cell internal battery pack / 78 months for 4 D-cell ext. battery pack
- RS 485:
  - With the termination resistor on:
    2.3 months for 2 D-cell internal battery pack / 4.6 months for 4 D-cell ext. battery pack
  - With the termination resistor off:
    39 months for 2 D-cell internal battery pack / 78 months for 4 D-cell ext. battery pack, in case the entire communication time is less than 4 hours/day

© Siemens 2020

Dimensional drawings

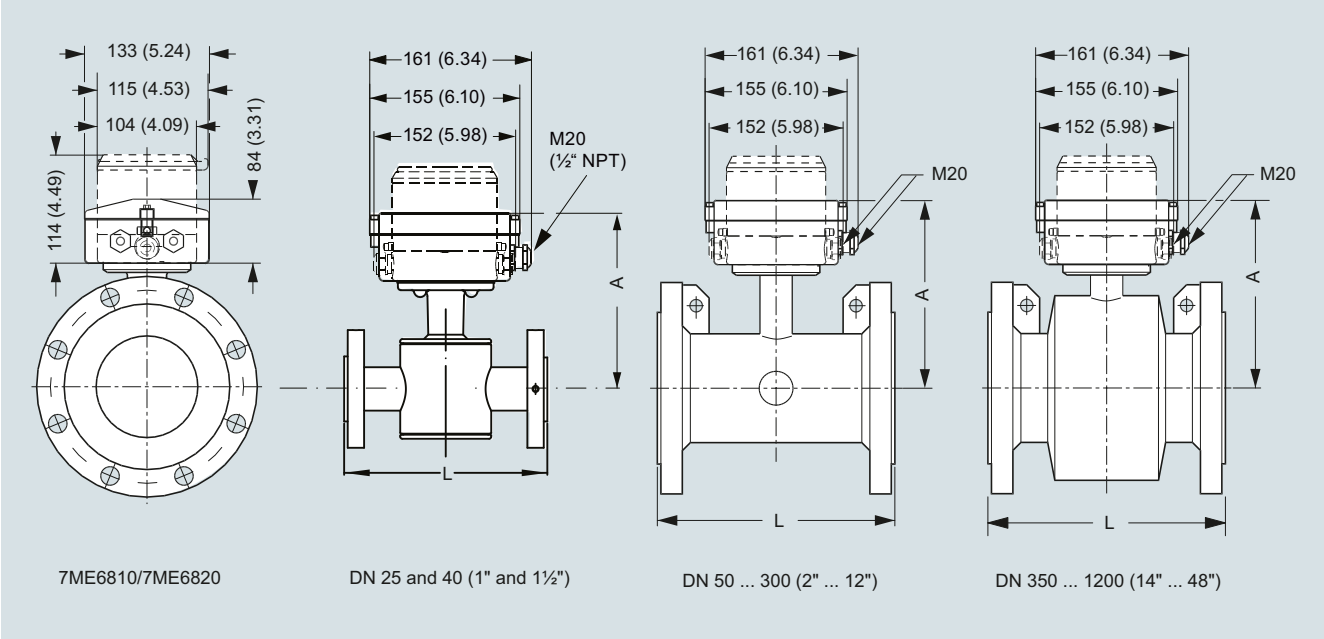

Dimensions in mm (inch)

Nominal DN size	A	L, lenghts[1]							Weight[2]	
	EPDM (7ME6810 and 7ME6820)	EN 1092-1 PN 10	EN 1092-1 PN 16/ PN 16 non-PED	EN 1092-1 PN 40	ANSI 16.5 Class 150	AS 4087 PN 16	AWA C-207 Class D	AS 2129		
mm (inch)	mm (inch)	mm	mm	mm	inch	mm	mm	mm	kg	lb
25 (1)	188 (7.4)	-	-	200	7.9	200	-	200	6	13
40 (1½)	203 (8.0)	-	-	200	7.9	200	-	200	9	20
50 (2)	178 (7.0)	-	200	-	7.9	200	-	-	11	25
65 (2½)	181 (7.1)	-	200	-	7.9	200	-	-	13	29
80 (3)	191 (7.5)	-	200	-	7.9	200	-	-	15	34
100 (4)	197 (7.8)	-	250	-	9.8	250	-	-	17	38
125 (5)	210 (8.3)	-	250	-	9.8	250	-	250	22	50
150 (6)	224 (8.8)	-	300	-	11.8	300	-	-	28	63
200 (8)	249 (9.8)	350	350	-	13.8	350	-	-	50	113
250 (10)	276 (10.9)	450	450	-	17.7	450	-	-	71	160
300 (12)	303 (11.9)	500	500	-	19.7	500	-	-	88	198
350 (14)	365 (14.4)	550	550	-	21.7	550	-	-	127	279
400 (16)	391 (15.4)	600	600	-	23.6	600	-	-	145	318
450 (18)	421 (16.6)	600	600	-	23.6	600	-	-	175	384
500 (20)	447 (17.6)	600	600	-	23.6	600	-	-	225	494
600 (24)	497 (19.6)	600	600	-	23.6	600	-	-	340	747
700 (28)	548 (21.6)	700	875/700	-	N/A	700	700	-	316	694
750 (30)	573 (22.6)	N/A	N/A	-	N/A	N/A	750	-	N/A	N/A
800 (32)	603 (23.7)	800	1000/800	-	N/A	800	800	-	398	1045
900 (36)	656 (25.8)	900	1125/900	-	N/A	900	900	-	476	1045
1000 (40)	708 (27.9)	1000	1250/1000	-	N/A	1000	1000	-	602	1322
1050 (42)	708 (27.9)	N/A	N/A	-	N/A	N/A	1050	-	N/A	N/A
1100 (44)	759 (29.9)	N/A	N/A	-	N/A	N/A	1100	-	N/A	N/A
1200 (48)	814 (32.0)	1200	1500/1200	-	N/A	1200	1200	-	887	1996

1) Tolerances on built-in length: DN 15 to DN 200 (½" to 8"): +0/-3 mm (+0/-0.12"), DN 250 to DN 400 (10" to 16"): +0/-5 mm (+0/-0.20"), DN 450 to DN 600 (18" to 24"): +5/-5 mm (+0.20/-0.20"), DN 700 to DN 1200 (28" to 48"): +10/-10 mm (+0.39/-0.39").

2) For remote version the sensor weight is reduced with 2 kg (4.5 lbs).

© Siemens 2020

Dimensional drawings (continued)

Remote version

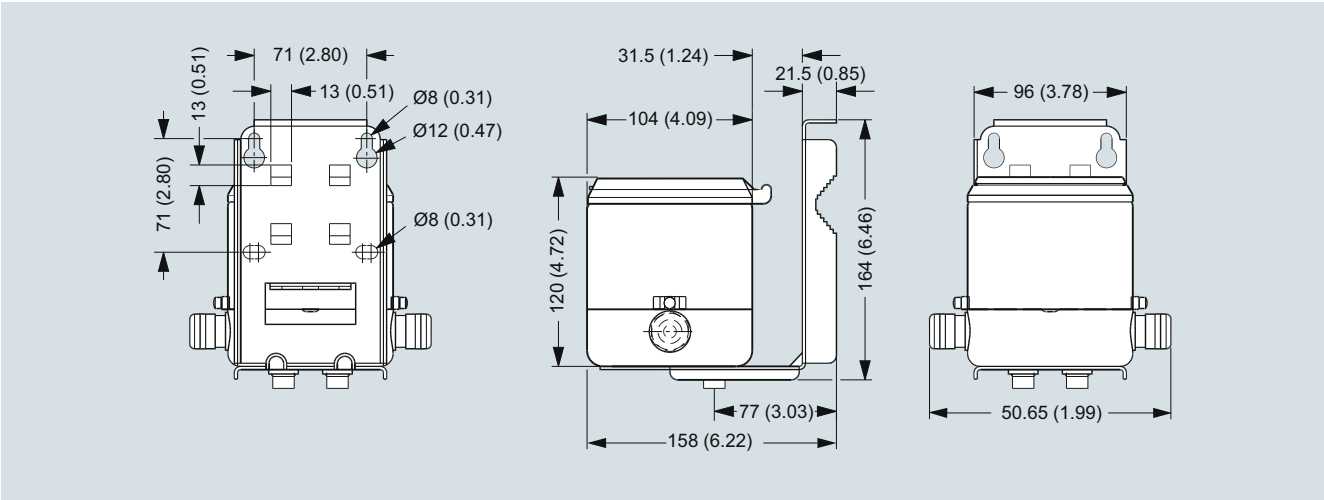

Dimensions in mm (inch), weight 3.5 kg (8 lbs)

External battery pack

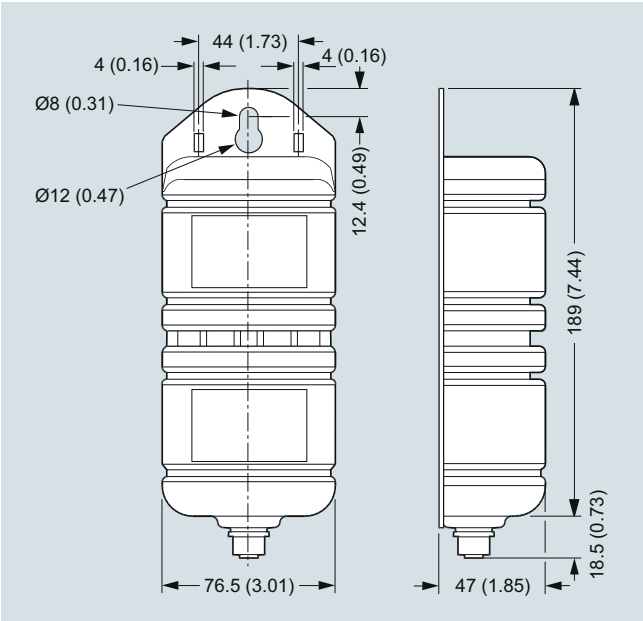

Dimensions in mm (inch), weight 2.0 kg (4.5 lbs)

Battery pack has to be mounted in upwards position to ensure maximum battery capacity.

Grounding rings

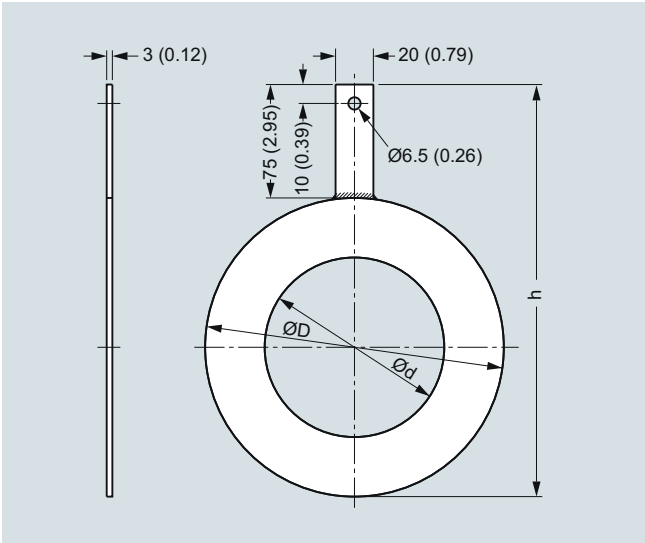

Dimensions in mm (inch) for grounding rings MAG 8000 with EPDM lining (7ME6810 and 7ME6820) DN 25 to DN 300

Dimension	Internal diameter (d)	Outside diameter (D)	h
DN 25	27	68	143
DN 40	38	88	163
DN 50	52	100	175
DN 65	64	120	195
DN 80	79	133	208
DN 100	95	158	233
DN 125	115	188	263
DN 150	145	216	291
DN 200	193	268	343
DN 250	246	324	399
DN 300	295	374	449

© Siemens 2020

Circuit diagrams

Electrical installation and pulse output – Connection diagram

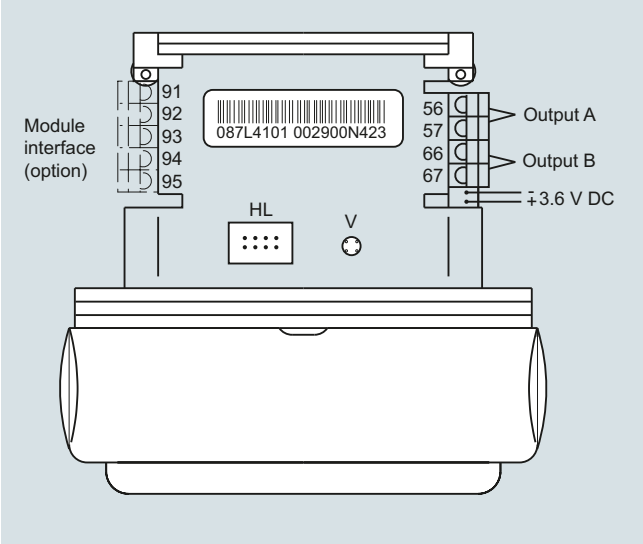

HL = Hardware lock key connection
V = Push button for verification mode

Pulse wire connection

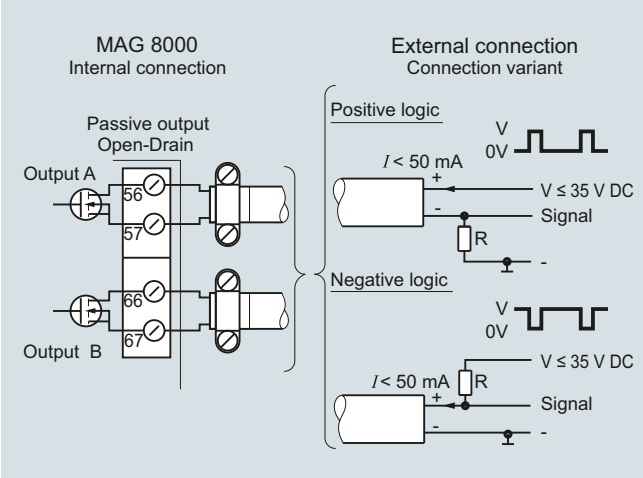

The pulse output can be configured as volume, alarm or call-up. The output can be connected as positive or negative logic.
R = pull up/down is selected in relation to the Vx power supply and with a max. current I of 50 mA.

Use shielded cable to avoid EMC problems. Make sure the shield is correctly mounted under the cable clamp (no pig tail).

© Siemens 2020

MAG 8000 for abstraction and distribution network application (7ME6810)

Overview

Benefits

Easy to install

- Compact or remote solution with factory mounted cable
- IP68/NEMA 6P enclosure. Sensor can be buried.
- Flexible power supply - internal or external battery pack or mains power supply with battery back-up possibilities

Long-term stability/Low cost of ownership

- No moving parts in a robust construction means less wear and tear
- Basic and advanced transmitter versions with different optional add-on communication modules fulfil various customer requirements for high cost efficiency
- Up to 0.2 % maximum uncertainty
- Bi-directional measurement with an outstanding low flow performance
- Up to 10 years maintenance-free operation in typical applications

Intelligent information, easy to access

- Advanced information on site
- Advanced statistics and diagnostics
- Optional high-performance 3G/UMTS module offers an efficient solution for remote measurement and monitor via wireless networks.

© Siemens 2020

Technical specifications

Meter	
Accuracy	Standard calibration: ± 0.4% ± 2 mm/s Extended calibration DN 50 … DN 300 (2" … 12"): ± 0.2 % of rate ± 2 mm/s
Low flow cut-off (default)	15 mm/s
Media conductivity	Clean water > 20 µs/cm
Temperature	
Ambient	-20 … +60 °C (-4 … +140 °F)
Media	0 … 70 °C (32 … 158 °F)
Storage	-40 … +70 °C (-40 … +158 °F)
Enclosure rating	
Remote sensor	IP68 to EN 60529/NEMA 6P, 10 mH_2O cont.
Compact version	IP68 to EN 60529/NEMA 6P, 3 mH_2O for six months
Certificates and approvals	
Calibration	
• Standard calibration	2 x 25 % and 2 x 90 % (default)
• Special calibration	5-point calibration: 20 %, 40 %, 60 %, 80 %, 100 % of factory Q_{max} 10-point calibration: ascending and descending at 20 %, 40 %, 60 %, 80 %, 100 % of factory Q_{max} Matched-pair calibration: default, 5-point, 10-point
Material certificate EN 10204-3.1	Available when ordering together with meter[1)]
Drinking water approvals	• NSF/ANSI Standard 61[2)] (cold water) USA • WRAS (BS 6920 cold water) UK • ACS Listed France • DVGW W270 Germany • Belgaqua (B) • MCERTS (GB)
Fire Service Approvals	FM Fire Service Meter (Class Number 1044)[3)]
Conformity	• PED: 2014/68/EU[4)] • EMC: IEC/EN 61326
Sensor version	DN 25 … 1200 (1" … 48")
Sensor material	Carbon steel ASTM A 105, with corrosion resistant coating of category C4 or C5 according to ISO 12944-2
Measuring principle	Electromagnetic induction
Excitation frequency	
Basic version	
• Battery-powered	DN 25 … 150 (1" … 6"): 1/15 Hz DN 200 … 600 (8" … 24"): 1/30 Hz DN 700 … 1200 (28" … 48"): 1/60 Hz
• Mains-powered	DN 25 … 150 (1" … 6"): 6.25 Hz DN 200 … 600 (8" … 24"): 3.125 Hz DN 700 … 1200 (28" … 48"): 1.5625 Hz

Meter	
Advanced version	
• Battery-powered	DN 25 … 150 (1" … 6"): 1/15 Hz (adjustable up to 6.25 Hz; reduced battery lifetime) DN 200 … 600 (8" … 24"): 1/30 Hz (adjustable up to 3.125 Hz; reduced battery lifetime) DN 700 ... 1200 (28" ... 48"): 1/60 Hz (adjustable up to 1.5625 Hz; reduced battery lifetime)
• Mains-powered	DN 25 ... 150 (1" ... 6"): 6.25 Hz DN 200 ... 600 (8" ... 24"): 3.125 Hz DN 700 ... 1200 (28" ... 48"): 1.5625 Hz
Flanges	
EN 1092-1 (DIN 2501)	DN 25 and DN 40 (1" and 1½"): PN 40 (580 psi) DN 50 ... 150 (2" ... 6"): PN 16 (232 psi) DN 200 ... 1200 (8" ... 48"): PN 10 or PN 16 (145 psi or 232 psi) DN 350 ... DN 600 (14" ... 24"): PN25 or PN40 (362 psi or 580 psi)
ANSI 16.5 Class 150	1" ... 24": 20 bar (290 psi)
AWWA C-207	28" ... 48": PN 10 (145 psi)
AS 4087	DN 50 … 1200 (2" … 48"): PN 16 (232 psi)
Liner	EPDM
Electrode and grounding electrodes	Hastelloy C276/2.4819
Grounding straps	Grounding straps are premounted from the factory on each side of the sensor.

1) Has to be ordered with the meter. It is not possible to order the certificate afterwards.
2) Including Annex G
3) Not for sensors with 300 µm coating.
4) For further information on PED standard and requirements see Pressure Equipment Directive in Appendix (chapter 10).

© Siemens 2020

MAG 8000 for abstraction and distribution network application (7ME6810)

Selection and ordering data

	Article No.
SITRANS F M MAG 8000 water meter ↗	**7ME6810-** ■■■■■ - ■■■■
↗ Click on the Article No. for the online configuration in the PIA Life Cycle Portal.	
Diameter	
DN 25 (1“)	2 D
DN 40 (1½“)	2 R
DN 50 (2“)	2 Y
DN 65 (2½“)	3 F
DN 80 (3“)	3 M
DN 100 (4“)	3 T
DN 125 (5“)	4 B
DN 150 (6“)	4 H
DN 200 (8“)	4 P
DN 250 (10“)	4 V
DN 300 (12“)	5 D
DN 350 (14“)	5 K
DN 400 (16“)	5 R
DN 450 (18“)	5 Y
DN 500 (20“)	6 F
DN 600 (24“)	6 P
DN 700 (28“)[1]	6 Y
DN 750 (30“)[1]	7 D
DN 800 (32“)[1]	7 H
DN 900 (36“)[1]	7 M
DN 1000 (40“)[1]	7 R
DN 1050 (42“)[1]	7 U
DN 1100 (44“)[1]	7 V
DN 1200 (48“)[1]	8 B
Flange norm and pressure rating	
EN 1092-1	
PN 10 (DN 200 ... 1200 (8“ ... 48“))	B
PN 16 (DN 50 ... 1200 (2“ ... 48“))	C
PN 16, non-PED (DN 700 ... 1200 (28“ ... 48“))	D
PN 25 (DN 350 ... 600 (12" ... 24"))	E
PN 40 (DN 25 ... 50 (1“ ... 1½“), DN 350 ... 600 (12" ... 24"))	F
ANSI B16.5	
Class 150	J
AWWA C-207	
Class D (28“ ... 48“)	L
AS 4087	
PN 16 (DN 50 ... 1200 (2" ... 48"))	N
Sensor version	
EPDM liner and Hastelloy electrodes, corrosion-resistant coating of category C4	3
EPDM liner and Hastelloy electrodes, 300 µm corrosion-resistant coating of category C5	4
Calibration	
Standard ± 0.4 % of rate ± 2 mm/s	1
Extended ± 0.2 % of rate ± 2 mm/s DN 50 ... 300 (2" ... 12")	2
NMI M 10 (2.5%) without verification	3

	Article No.
SITRANS F M MAG 8000 water meter	**7ME6810-** ■■■■■ - ■■■■
Region version	
Europe (m3, m3/h, 50 Hz)	1
USA (Gallon, GPM, 60 Hz)	2
Australia (Ml, Ml/d, 50 Hz)	3
Transmitter type and installation	
Basic version integral or sensor	A
Basic version, remote cables mounted on sensor with IP68/NEMA 6P plugs:	
• 5 m (16.4 ft)	B
• 10 m (32.8 ft)	C
• 20 m (65.6 ft)	D
• 30 m (98.4 ft)	E
Advanced version integral on sensor	K
Advanced version, remote cables mounted on sensor with IP68/NEMA 6P plugs:	
• 5 m (16.4 ft)	L
• 10 m (32.8 ft)	M
• 20 m (65.6 ft)	N
• 30 m (98.4 ft)	P
Communication interface	
No additional "add-on" communication module installed	A
Serial RS 485 with Modbus RTU (Terminated as end device)	B
Serial RS 232 with Modbus RTU	C
Encoder interface with Sensus protocol	D
3G/UMTS communication module with remote antenna; 5 m (16.4 ft) cable	S
3G/UMTS communication module with analog inputs and remote antenna; 5 m (16.4 ft) cable	T
Power supply	
Internal battery (no battery included)	0
Internal battery pack installed[1]	1
Power cable (1.5 m (4.9 ft)) with IP68/NEMA 6P plugs for external battery (no battery included)	2
12/24 V AC/DC power supply with battery backup and 3 m (9.8 ft) power cable for external connection (no battery included)	3
115 ... 230 V AC power supply with battery backup and 3 m (9.8 ft) power cable for external connection (no battery included)	4

[1] The Diameter DN 700 (28") to DN 1200 (48") is only available as remote transmitter type installation.

[2] Lithium batteries are subject to special transportation regulations according to United Nations "Regulation of Dangerous Goods, UN 3090 and UN 3091". Special transport documentation is required to observe these regulations. This may influence both transport time and costs.

© Siemens 2020

Selection and ordering data

	Order code
Additional information	
Please add "**-Z**" to Article No. and specify Order code(s) and plain text.	
Certificate	
Inspection certificate 3.1 (EN 10204) - pressure test	**C01**
Material certificate according to EN 10204-3.1[1)]	**C12**
Special calibration	
5-point calibration for DN 15 ... DN 200[2)]	**D01**
5-point calibration for DN 250 ... DN 600[2)]	**D02**
5-point calibration for DN 700 ... DN 1200[2)]	**D03**
10-point calibration for DN 15 ... DN 200[3)]	**D06**
10-point calibration for DN 250 ... DN 600[3)]	**D07**
10-point calibration for DN 700 ... DN 1200[3)]	**D08**
Default (2 × 25 % and 2 × 90 %) match-pair calibration for DN 15 ... DN 200	**D11**
Default (2 × 25 % and 2 × 90 %) match-pair calibration for DN 250 ... DN 600	**D12**
Default (2 × 25 % and 2 × 90 %) match-pair calibration for DN 700 ... DN 1200	**D13**
5-point, matched-pair calibration for DN 15 ... DN 200[2)]	**D15**
5-point, matched-pair calibration for DN 250 ... DN 600[2)]	**D16**
5-point, matched-pair calibration for DN 700 ... DN 1200[2)]	**D17**
10-point, matched-pair calibration for DN 15 ... DN 200[3)]	**D18**
10-point, matched-pair calibration for DN 250 ... DN 600[3)]	**D19**
10-point, matched-pair calibration for DN 700 ... DN 1200[3)]	**D20**
Flow unit	
l/s	**L00**
MGD	**L01**
CFS	**L02**
l/min	**L03**
m^3/min	**L04**
GPM	**L05**
CFM	**L06**
l/h	**L07**
m^3/h	**L08**
GPH	**L09**
CFH	**L10**
GPS	**L11**
Ml/d	**L12**
m^3/d	**L13**
GPD	**L14**
BBL42/s	**L15**
BBL42/min	**L16**
BBL42/h	**L17**
BBL42/d	**L18**
Totalizer	
Volume calculation (default totalizer 1= forward and totalizer 2 = reverse)	
Totalizer 1 = RV, reverse flow	**L20**
Totalizer 1 = NET, net flow	**L22**
Totalizer 2 = FW, forward flow	**L30**
Totalizer 2 = NET, net flow	**L31**

	Order code
Additional information	
Please add "**-Z**" to Article No. and specify Order code(s) and plain text.	
Volume unit	
m^3	**L40**
Ml	**L41**
G	**L42**
AF	**L43**
l x 100	**L44**
m^3 x 100	**L45**
G x 100	**L46**
CF x 100	**L47**
MG	**L48**
G x 1000	**L49**
CF x 1000	**L50**
Al	**L51**
kl	**L52**
BBL42 (US oil barrel, 1 barrel = 42 US gallons)	**L54**
Volume unit = AF, amount per pulse A = 1 US Gallon[5)]	**L55**
Volume unit = Al, amount per pulse A = 1 US Gallon[5)]	**L56**
Volume unit = CFx100, amount per pulse A = 1 US Gallon[5)]	**L57**
Volume unit = BBL42, amount per pulse A = 1 US Gallon[5)]	**L58**
Pulse set up	
(default pulse A = forward and pulse B = Alarm, pulse width = 50 ms)	
A function = RV, reverse flow	**L62**
A function = FWnet, forward net flow	**L63**
A function = RVnet, reverse net flow	**L64**
A function = Off	**L65**
Volume per pulse A = × 0.0001[4)]	**L70**
Volume per pulse A = × 0.001[4)]	**L71**
Volume per pulse A = × 0.01[4)]	**L72**
Volume per pulse A = × 0.1[4)]	**L73**
Volume per pulse A = × 1[4)]	**L74**
Pulse A pulse width 5 ms (volume per pulse × 1)	**L75**
Pulse A pulse width 10 ms (volume per pulse × 1)	**L76**
Pulse A pulse width 50 ms (volume per pulse × 1)	**L77**
Pulse A pulse width 100 ms (volume per pulse × 1)	**L78**
Pulse A pulse width 500 ms (volume per pulse × 1)	**L79**
B function = FW, forward flow	**L80**
B function = RV, verse flow	**L81**
B function = FWnet, forward net flow	**L82**
B function = RVnet, reverse net flow	**L83**
B function = Alarm	**L84**
B function = Call up	**L85**
Volume per pulse B = × 0.0001[4)]	**L90**
Volume per pulse B = × 0.001[4)]	**L91**
Volume per pulse B = × 0.01[4)]	**L92**
Volume per pulse B = × 0.1[4)]	**L93**
Volume per pulse B = × 1[4)]	**L94**

© Siemens 2020

Selection and ordering data	Order code
Additional information	
Please add "**-Z**" to Article No. and specify Order code(s) and plain text.	
Device operation	
Only operator menu activated	**M11**
Data logger set up (default month logging)	
DataloggerInterval = Daily	**M31**
DataloggerInterval = Weekly	**M32**
Factory mounted cables	
5 m (16.4 ft) pulse cable A+B	**M81**
5 m (16.4 ft) communication cable RS 232/RS 485 terminated as end device	**M82**
20 m (65.6 ft) pulse cable A+B	**M84**
20 m (65.6 ft) communication cable RS 232/RS 485 terminated as end device	**M85**
Cello 2 channel, input cable 3 m (9.84 ft) with Brad Harrison micro-change 3 way connector	**M87**
Cello 2 channel, input cable 5 m (16.4 ft) with MIL-C-26482 spec. connectors	**M89**
Encoder interface cable with connector for ITRON 200WP radio, lenght 25 ft	**M90**
Encoder interface cable with connector for ITRON 200WP radio, length 5 ft	**M91**
SOFREL cable 2 m for LS42 data logger	**M92**
Adaptors for conduit installation	**M94**
SOFREL cable 2 m for LS-Flow data logger	**M97**
FM Fire Service Approval	
(with ANSI B16.5 Class 150 flanges)	
DN 50, DN 80 and DN 100 (2", 3" and 4")	**P20**
DN 150 and DN 200 (6" and 8")	**P21**
DN 250 and DN 300 (10" and 12")	**P22**
Region/customer specific labels	
KCC label (South Korea)	**W28**
DIN 43863 label[1)]	**H21**
DIN 43863 label with SWM mark[1)]	**H22**
ADDC label	**H23**
Region specific settings	
Low flow cutoff = 5 mm/s	**M20**

1) Under preparation
2) 20 %, 40 %, 60 %, 80 %, 100 % of factory Q_{max}
3) Ascending and descending at 20 %, 40 %, 60 %, 80 %, 100 % of factory Q_{max}
4) Pulse width = 10 ms
5) Pulse width = 5 ms
6) Siemens warrants the measurement accuracy down to a flow velocity of 15 mm/s. For a flow velocity below 15 mm/s, we don't warrant the measurement accuracy

Operating instructions for SITRANS F M MAG 8000

Description	Article No.
• English	**A5E03071515**
• German	**A5E00740986**

All literature is available to download for free, in a range of languages, at
http://www.siemens.com/processinstrumentation/documentation

Operating instructions for MAG 8000 3G/UMTS communication module

Description	Article No.
• English	**A5E03644134**

© Siemens 2020

Overview

Benefits

Approvals

- MI-001, OIML R 49/OIML R 49 MAA
- FM Fire Service

Easy to install

- Compact or remote solution with factory mounted cable and customer setting from factory
- IP68/NEMA 6P enclosure. Sensor can be buried.
- Flexible power supply - internal or external battery pack or mains power supply with battery back-up possibilities

Long-term stability/Low cost of ownership

- No moving parts in a robust construction means less wear and tear
- Basic and advanced transmitter versions with different optional add-on communication modules fulfil various customer requirements for high cost efficiency
- Bi-directional measurement with an outstanding low flow performance
- Up to 10 years maintenance-free operation in typical applications
- Insignificant pressure drop

Intelligent information, easy to access

- Advanced information on site
- Advanced statistics and diagnostics
- Connectable to common AMR systems

© Siemens 2020

Technical specifications

Meter	
Accuracy	OIML R 49/OIML R 49 MAA accuracy class I for DN 50, DN 350 ... DN 600 accuracy class II for DN 50 ... DN 600 MI-001 verification for DN 50 … DN 600 (2" … 24"), with Q3/Q1 = 315 FM Fire Service for DN 50, DN 80, DN 100, DN 150, DN 200, DN 250, and DN 300 (2", 3", 4", 6", 8", 10", and 12") ± 1,5 % (Q_{min} to Q_{max})
Low flow cut-off (default)	15 mm/s
Media conductivity	Clean water > 20 µs/cm
Temperature	
Ambient	-20 … +60 °C (-4 … +140 °F) MI-001: -25 ... +55 °C (-13 ... +131 °F)
Media	0.1 … 50 °C (32 … 122 °F)
Storage	-40 … +70 °C (-22 … +158 °F)
Enclosure rating	
Remote sensor	IP68 to EN 60529/NEMA 6P, 10 mH_2O cont.
Compact version	IP68 to EN 60529/NEMA 6P, 3 mH_2O for six months
Certificates and approvals	
Calibration (standard)	2 × 25 % and 2 × 90 %
Material certificate EN 10204-3.1	Available when ordering together with meter[1)]
Drinking water approvals	• NSF/ANSI Standard 61[2)] (cold water) USA • WRAS (BS 6920 cold water) UK • ACS Listed France • DVGW W270 Germany • Belgaqua (B) • MCERTS (GB)
Fire Service approval	FM Fire Service (1044)[3)]
Custody transfer approval	• OIML R 49 and OIML R 49 MAA approval • MI-001 approval (DK-0200-MI001-011)
Conformity	• CEN EN 14154, ISO 4064 • PED: 2014/68/EU[4)] For pressure/temperature curves see MAG 3100 on page 3/67 • EMC: IEC/EN 61326 • CRN (DN 50 ... DN 1200 (2" ... 48"))

Meter	
Sensor version	DN 50 … 600 (2" … 24")
Sensor material	Carbon steel ASTM A 105, with corrosion resistant coating of category C4 or C5 according to ISO 12944-2
Measuring principle	Electromagnetic induction
Excitation frequency	
Basic version	
• Battery-powered	DN 50 … 150 (2" … 6"): 1/15 Hz DN 200 … 600 (8" … 24"): 1/30 Hz
• Mains-powered	DN 50 … 150 (2" … 6"): 6.25 Hz DN 200 … 600 (8" … 24"): 3.125 Hz
Advanced version	
• Battery-powered	DN 50 … 150 (2" … 6"): 1/15 Hz (adjustable up to 6.25 Hz; reduced battery lifetime) DN 200 … 600 (8" … 24"): 1/30 Hz (adjustable up to 3.125 Hz; reduced battery lifetime)
• Mains-powered	DN 50 … 150 (2" … 6"): 6.25 Hz DN 200 … 600 (8" … 24"): 3.125 Hz
Flanges	
EN 1092-1 (DIN 2501)	DN 50 … 150 (2" … 6"): PN 16 (232 psi) DN 200 … 300 (8" … 12"): PN 10 or PN 16 (145 psi or 232 psi) up to DN 600 (24") in preparation
ANSI 16.5 Class 150	2" … 12": 20 bar (290 psi) up to DN 600 (24") in preparation
AWWA C-207	28" … 48": PN 10 (145 psi)
AS 4087	DN 50 … 300 (2" … 12"): PN 16 (232 psi) up to DN 600 (24") in preparation
Liner	EPDM
Electrode and grounding electrodes	Hastelloy C276/2.4819
Grounding straps	Grounding straps are premounted from the factory on each side of the sensor.

1) Has to be ordered with the meter. It is not possible to order the certificate afterwards.
2) Including Annex G
3) Not for sensors with 300 m coating.
4) For further information on the PED standard and requirements see Pressure Equipment Directive in Appendix (chapter 10).

© Siemens 2020

Technical specifications (continued)

MAG 8000 CT (Revenue program) water meter type approval

MAG 8000 CT program is type approved and verified according to international water meter standard OIML R 49.
The custody transfer program is approved as Class 1 (DN 50, DN 350 ... DN 600) and Class 2 (DN 50 ... DN 600), at different Q3 and Q3/Q1, according to OIML R 49:2013 specification.

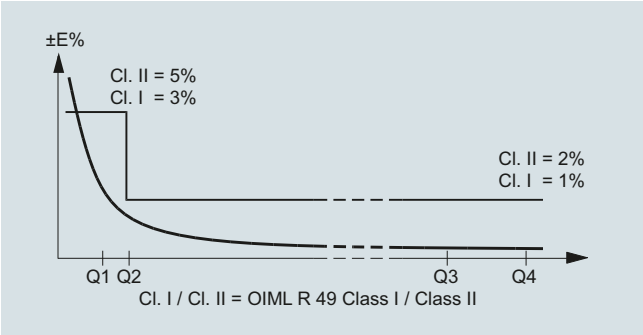

OIML R 49:2013 specification for Class 1[1)]

7ME6820	DN 50 (2")	DN 350 (14")	DN 400 (16")	DN 450 (18")	DN 500 (20")	DN 600 (24")
R (Q3/Q1)	**200**	**125**	**125**	**125**	**125**	**125**
Q4 [m^3/h]	78.75	3125	5000	5000	7875	7875
Q3 [m^3/h]	63	2500	4000	4000	6300	6300
Q2 [m^3/h]	0.5	32	51.2	51.2	80.64	80.64
Q1 [m^3/h]	0.32	20	32	32	50.4	50.4

OIML R 49:2013 specification for Class 2[1)]

	Horizontal installation													
7ME6820	**DN 50 (2")**	**DN 65 (2½")**	**DN 80 (3")**	**DN 100 (4")**	**DN 125 (5")**	**DN 150 (6")**	**DN 200 (8")**	**DN 250 (10")**	**DN 300 (12")**	**DN 350 (14")**	**DN 400 (16")**	**DN 450 (18")**	**DN 500 (20")**	**DN 600 (24")**
R (Q3/Q1)	**315**	**315**	**315**	**315**	**315**	**315**	**315**	**315**	**315**	**200**	**200**	**200**	**200**	**200**
Q4 [m^3/h]	78.75	125	200	312.5	500	787.5	1250	2000	2000	3125	5000	5000	7875	7875
Q3 [m^3/h]	63	100	160	250	400	630	1000	1600	1600	2500	4000	4000	6300	6300
Q2 [m^3/h]	0.32	0.51	0.81	1.27	2.03	3.2	5.08	8.13	8.13	20	32	32	50.4	50.4
Q1 [m^3/h]	0.2	0.32	0.51	0.79	1.27	2	3.18	5.08	5.08	12.5	20	20	31.5	31.5

[1)] The product will be delivered according to requested specifications, which may deviate from the specifications of the approval frame described in tables below.

© Siemens 2020

3

Technical specifications (continued)

MAG 8000 CT (Revenue program) MI-001

MAG 8000 CT program is type approved according to international water meter standard OIML R 49. Since the first November 2006 the MI-001 water meter directive is in force, which means that all water meters can be sold across the EU borders if the water meters contain a MI-001 label.

The MAG 8000 CT MI-001 verified and labeled products are a Class II aproval according to Directive 2014/32/EU of the European Parliament and Council of 26 February, 2014 on measuring instruments, Annex III Water meters (MI-001) in the sizes from DN 50 to DN 600.

The MID certification is obtained as a B + D module approval according to the above mentioned directive.

Module B: Type approval according to OIML R 49

Module D: Quality insurance approval of production

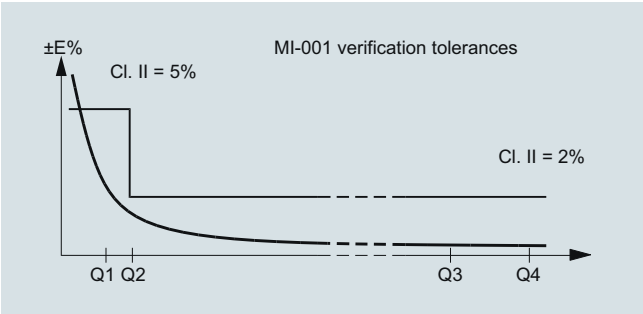

MAG 8000 CT MI-001 verified and labeled products at a given Q3 and Q4/Q3 = 1.25 and Q2/Q1 = 1.6 measuring ranges see below table:

	Horizontal installation													
7ME6820-xxxx1	**DN 50 (2“)**	**DN 65 (2½“)**	**DN 80 (3“)**	**DN 100 (4“)**	**DN 125 (5“)**	**DN 150 (6“)**	**DN 200 (8“)**	**DN 250 (10“)**	**DN 300 (12“)**	**DN 350 (14“)**	**DN 400 (16“)**	**DN 450 (18")**	**DN 500 (20")**	**DN 600 (24")**
R (Q3/Q1)	**40**	**40**	**40**	**40**	**40**	**40**	**40**	**40**	**40**	**40**	**40**	**40**	**40**	**40**
Q4 [m^3/h]	20	31.25	50	78.75	125	200	312.5	500	787.5	787.5	1250	2000	3125	5000
Q3 [m^3/h]	**16**	**25**	**40**	**63**	**100**	**160**	**250**	**400**	**630**	**630**	**1000**	**1600**	**2500**	**4000**
Q2 [m^3/h]	0.64	1	1.6	2.52	4	6.4	10	16	25.2	25.2	40	64	100	160
Q1 [m^3/h]	0.4	0.63	1	1.58	2.5	4	6.25	10	15.75	15.75	25	40	62.5	100

	Horizontal installation													
7ME6820-xxxx2	**DN 50 (2“)**	**DN 65 (2½“)**	**DN 80 (3“)**	**DN 100 (4“)**	**DN 125 (5“)**	**DN 150 (6“)**	**DN 200 (8“)**	**DN 250 (10“)**	**DN 300 (12“)**	**DN 350 (14“)**	**DN 400 (16“)**	**DN 450 (18")**	**DN 500 (20")**	**DN 600 (24")**
R (Q3/Q1)	**63**	**63**	**63**	**63**	**63**	**63**	**63**	**63**	**63**	**63**	**63**	**63**	**63**	**63**
Q4 [m^3/h]	20	31.25	50	79	125	200	312.5	500	788	1250	2000	3125	5000	7875
Q3 [m^3/h]	**16**	**25**	**40**	**63**	**100**	**160**	**250**	**400**	**630**	**1000**	**1600**	**2500**	**4000**	**6300**
Q2 [m^3/h]	0.41	0.64	1.02	1.6	2.54	4.06	6.35	10.16	16	25.4	40.63	63.49	101.59	160
Q1 [m^3/h]	0.25	0.4	0.64	1	1.59	2.54	3.97	6.35	10	15.88	25.4	39.68	63.49	100

© Siemens 2020

Technical specifications (continued)

	Horizontal installation													
7ME6820-xxxx3	**DN 50 (2“)**	**DN 65 (2½“)**	**DN 80 (3“)**	**DN 100 (4“)**	**DN 125 (5“)**	**DN 150 (6“)**	**DN 200 (8“)**	**DN 250 (10“)**	**DN 300 (12“)**	**DN 350 (14“)**	**DN 400 (16“)**	**DN 450 (18")**	**DN 500 (20")**	**DN 600 (24")**
R (Q3/Q1)	**80**	**80**	**80**	**80**	**80**	**80**	**80**	**80**	**80**	**80**	**80**	**80**	**80**	**80**
Q4 [m³/h]	31.25	50	79	125	200	312.5	500	788	1250	2000	3125	3125	5000	7875
Q3 [m³/h]	**25**	**40**	**63**	**100**	**160**	**250**	**400**	**630**	**1000**	**1600**	**2500**	**2500**	**4000**	**6300**
Q2 [m³/h]	0.5	0.8	1.26	2	3.2	5	8	12.6	20	32	50	50	80	126
Q1 [m³/h]	0.31	0.5	0.79	1.25	2	3.13	5	7.88	12.5	20	31.25	31.25	50	78.75

	Horizontal installation													
7ME6820-xxxx4	**DN 50 (2“)**	**DN 65 (2½“)**	**DN 80 (3“)**	**DN 100 (4“)**	**DN 125 (5“)**	**DN 150 (6“)**	**DN 200 (8“)**	**DN 250 (10“)**	**DN 300 (12“)**	**DN 350 (14“)**	**DN 400 (16“)**	**DN 450 (18")**	**DN 500 (20")**	**DN 600 (24")**
R (Q3/Q1)	**160**	**160**	**160**	**160**	**160**	**160**	**160**	**160**	**160**	**160**	**160**	**160**	**160**	**160**
Q4 [m³/h]	50	79	125	200	312.5	500	788	1250	2000	3125	5000	5000	7875	7875
Q3 [m³/h]	**40**	**63**	**100**	**160**	**250**	**400**	**630**	**1000**	**1600**	**2500**	**4000**	**4000**	**6300**	**6300**
Q2 [m³/h]	0.4	0.63	1	1.6	2.5	4	6.3	10	16	25	40	40	63	63
Q1 [m³/h]	0.25	0.39	0.63	1	1.56	2.5	3.94	6.25	10	15.63	25	25	39.38	39.38

	Horizontal installation								
7ME6820-xxxx5	**DN 50 (2“)**	**DN 65 (2½“)**	**DN 80 (3“)**	**DN 100 (4“)**	**DN 125 (5“)**	**DN 150 (6“)**	**DN 200 (8“)**	**DN 250 (10“)**	**DN 300 (12“)**
R (Q3/Q1)	**200**	**200**	**200**	**200**	**200**	**200**	**200**	**200**	**200**
Q4 [m³/h]	78.75	125	200	312.5	500	787.5	1250	2000	2000
Q3 [m³/h]	**63**	**100**	**160**	**250**	**400**	**630**	**1000**	**1600**	**1600**
Q2 [m³/h]	0.5	0.8	1.28	2	3.2	5.04	8	12.8	12.8
Q1 [m³/h]	0.32	0.5	0.8	1.25	2	3.15	5	8	8

	Horizontal installation								
7ME6820-xxxx6	**DN 50 (2“)**	**DN 65 (2½“)**	**DN 80 (3“)**	**DN 100 (4“)**	**DN 125 (5“)**	**DN 150 (6“)**	**DN 200 (8“)**	**DN 250 (10“)**	**DN 300 (12“)**
R (Q3/Q1)	**250**	**250**	**250**	**250**	**250**	**250**	**250**	**250**	**250**
Q4 [m³/h]	78.75	125	200	312.5	500	787.5	1250	2000	2000
Q3 [m³/h]	**63**	**100**	**160**	**250**	**400**	**630**	**1000**	**1600**	**1600**
Q2 [m³/h]	0.4	0.64	1.02	1.6	2.56	4.03	6.4	10.24	10.24
Q1 [m³/h]	0.25	0.40	0.64	1	1.6	2.52	4	6.4	6.4

The Label is placed on the side of the encapsulation.
An example of the product label is shown below:

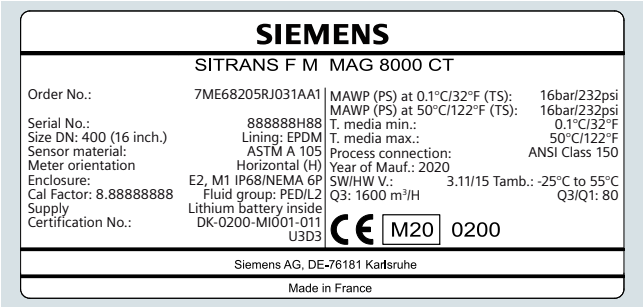

Installation conditions

Please refer to “System information SITRANS FM electromagnetic flowmeters”.

Battery operation time and calculation

The battery operation time depends on the connected battery pack as well as the operation condition of the meter.

MAG 8000 calculates the remaining capacity every 4 hours and includes all consuming elements. Calculation compensates for temperature influence on battery capacity (drawing).

MAG 8000 CT (7ME6820) for Fire Service applications

MAG 8000 CT (7ME6820) is FM Fire Service approved for automatic fire protection systems according to the Fire Service Meters Standard, Class Number 1044. The approval is applicable for the sizes 50, DN 80, DN 100, DN 150, DN 200, DN 250, and DN 300 (2", 3", 4", 6", 8", 10", and 12") with ANSI B16.5 Class 150 flanges. The FM Fire Service approved product can be ordered via the Z-options P20, P21 and P22.

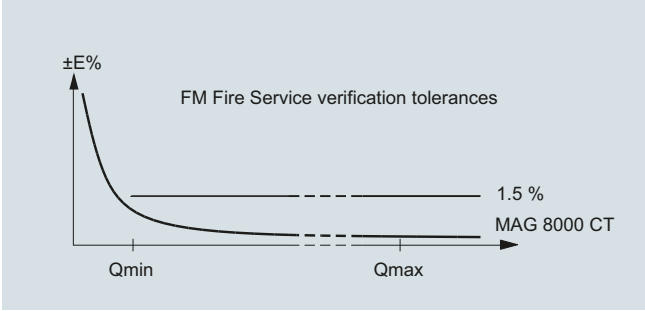

© Siemens 2020

MAG 8000 CT for revenue and bulk metering (7ME6820)

Selection and ordering data

	Article No.
SITRANS FM ↗	**7ME6820-**
MAG 8000 CT water meter with EPDM liner and Hastelloy electrodes	■ ■ ■ ■ ■ - ■ ■ ■ ■
↗ Click on the Article No. for the online configuration in the PIA Life Cycle Portal.	
Diameter	
DN 50 (2“)	**2 Y**
DN 65 (2½“)	**3 F**
DN 80 (3“)	**3 M**
DN 100 (4“)	**3 T**
DN 125 (5“)	**4 B**
DN 150 (6“)	**4 H**
DN 200 (8“)	**4 P**
DN 250 (10“)	**4 V**
DN 300 (12“)	**5 D**
DN 350 (14")	**5 K**
DN 400 (16")	**5 R**
DN 450 (18")	**5 Y**
DN 500 (20")	**6 F**
DN 600 (24")	**6 P**
Flange norm and pressure rating	
EN 1092-1	
PN 10	**B**
PN 16	**C**
ANSI B16.5	
Class 150	**J**
AS4087	
PN 16	**N**
Sensor version	
EPDM liner and Hastelloy electrodes, corrosion-resistant coating of category C4	**0**
EPDM liner and Hastelloy electrodes, 300 µm corrosion-resistant coating of category C5	**4**
Approval/Verification[2]	
Without verification according to OIML R 49[3]	**0**
MI-001 Q3/Q1 = 40	**1**
MI-001 Q3/Q1 = 63	**2**
MI-001 Q3/Q1 = 80	**3**
MI-001 Q3/Q1 = 160	**4**
MI-001 Q3/Q1 = 200	**5**
MI-001 Q3/Q1 = 250	**6**
Without verification calibrated to OIML R 49-Class II (Q3/Q1 = 100)	**7**
Without verification calibrated to OIML R 49-Class II (Q3/Q1 = 250)	**8**
Region version	
Europe (m^3, m^3/h, 50 Hz)	**1**
USA (m^3, m^3/h, 60 Hz)	**2**

	Article No.
SITRANS FM	**7ME6820-**
MAG 8000 CT water meter with EPDM liner and Hastelloy electrodes	■ ■ ■ ■ ■ - ■ ■ ■ ■
Transmitter type and installation	
Basic version integral on sensor	**A**
Basic version, remote cables mounted on sensor with IP68/NEMA 6P plugs	
5 m (16.4 ft)	**B**
10 m (32.8 ft)	**C**
20 m (65.6 ft)	**D**
30 m (98.4 ft)	**E**
Advanced version integral on sensor	**K**
Advanced version, remote cables mounted on sensor with IP68/NEMA 6P plugs	
5 m (16.4 ft)	**L**
10 m (32.8 ft)	**M**
20 m (65.6 ft)	**N**
30 m (98.4 ft)	**P**
Communication interface	
No additional "add-on" communication module installed	**A**
Serial RS 485 with Modbus RTU (Terminated as end device)	**B**
Serial RS 232 with Modbus RTU	**C**
Encoder interface for ITRON 200WP radio with "Sensus" protocol"	**D**
3G/UMTS communication module with remote antenna; 5 m (16.4 ft) cable	**S**
3G/UMTS communication module with analog inputs and remote antenna; 5 m (16.4 ft) cable	**T**
Power supply	
Internal battery (no battery included)	**0**
Internal battery pack installed[1]	**1**
Power cable (1.5 m (4.9 ft)) with IP68/NEMA 6P plugs for external battery (no battery included)	**2**
12/24 V AC/DC power supply with battery backup and 3 m (9.8 ft) power cable for external connection (no battery included)	**3**
115 ... 230 V AC power supply with battery backup and 3 m (9.8 ft) power cable for external connection (no battery included)	**4**

1) Lithium batteries are subject to special transportation regulations according to United Nations "Regulation of Dangerous Goods, UN 3090 and UN 3091". Special transport documentation is required to observe these regulations. This may influence both transport time and costs.

2) For more details and references of the ranges please see the tables on the previous pages.

3) Standard calibration or according to FM Fire Service requirements if P20, P21 or P22 is selected as Z option.

© Siemens 2020

Selection and ordering data

	Order code
Additional information	
Please add "**-Z**" to Article No. and specify Order code(s) and plain text.	
Inspection certificate 3.1 (EN 10204) - pressure test	**C01**
Material certificate according to EN 10204-3.1[1)]	**C12**
Totalizer	
Volume calculation (default totalizer 1= forward and totalizer 2 = reverse)	
Totalizer 1 = RV, reverse flow	**L20**
Totalizer 1 = NET, net flow	**L22**
Totalizer 2 = FW, forward flow	**L30**
Totalizer 2 = NET, net flow	**L31**
Pulse set up	
(default pulse A = forward and pulse B = Alarm, pulse width = 50 ms)	
A function = RV, reverse flow	**L62**
A function = FWnet, forward net flow	**L63**
A function = RVnet, reverse net flow	**L64**
A function = Off	**L65**
Volume per pulse A = x 0.001[2)]	**L71**
Volume per pulse A = x 0.01[2)]	**L72**
Volume per pulse A = x 0.1[2)]	**L73**
Volume per pulse A = x 1[2)]	**L74**
B function = FW, forward flow	**L80**
B function = RV, reverse flow	**L81**
B function = FWnet, forward net flow	**L82**
B function = RVnet, reverse net flow	**L83**
B function = Alarm	**L84**
B function = Call up	**L85**
Volume per pulse B = x 0.001[2)]	**L91**
Volume per pulse B = x 0.01[2)]	**L92**
Volume per pulse B = x 0.1[2)]	**L93**
Volume per pulse B = x 1[2)]	**L94**
Data logger set up (default month logging)	
DataloggerInterval = Daily	**M31**
DataloggerInterval = Weekly	**M32**
Factory mounted cables	
5 m (16.4 ft) pulse cable A+B	**M81**
5 m (16.4 ft) communication cable RS 232/RS 485 terminated as end device	**M82**
20 m (65.6 ft) pulse cable A+B	**M84**
20 m (65.6 ft) communication cable RS 232/RS 485 terminated as end device	**M85**
Cello 2 channel, input cable 3 m (9.84 ft) with Brad Harrison micro-change 3 way connector	**M87**
Cello 2 channel, input cable 5 m (16.4 ft) with MIL-C-26482 spec. connectors	**M89**
5 ft. Encoder interface cable with connector for ITRON 200WP radio	**M91**
25 ft. Encoder interface cable with connector for ITRON 200WP radio	**M90**
SOFREL cable 2 m for LS42 data logger	**M92**
SOFREL cable 2 m for LS-Flow data logger	**M97**

	Order code
Additional information	
Please add "**-Z**" to Article No. and specify Order code(s) and plain text.	
FM Fire Service Approval	
(with ANSI B16.5 Class 150 flanges)	
DN 50, DN 80 and DN 100 (2", 3" and 4")	**P20**
DN 150 and DN 200 (6" and 8")	**P21**
DN 250 and DN 300 (10" and 12")	**P22**
Region/customer specific label	
KCC label (South Korea)	**W28**
FP2E label (France)	**H20**
DIN 43863 label[1)]	**H21**
DIN 43863 label with SWM mark[1)]	**H22**
ADDC label	**H23**

1) Under preparation
2) Pulse width = 10 ms

Operating instructions for SITRANS F M MAG 8000

Description	Article No.
• English	**A5E03071515**
• German	**A5E00740986**

All literature is available to download for free, in a range of languages, at
http://www.siemens.com/processinstrumentation/documentation

Operating instructions for MAG 8000 3G/UMTS communication module

Description	Article No.
• English	**A5E03644134**

© Siemens 2020

MAG 8000 3G/UMTS Wireless Communication Module

Overview

3G/UMTS communication module

PC-IrDA connection

MAG 8000 3G/UMTS Wireless Communication Module

The 3G/UMTS wireless communication module is a compact built-in solution which can be installed in the existing MAG 8000 with SW version 3.02 and higher, supporting HSDPA cat. 8/HSUPA Cat.6 at 5 UMTS bands, with the ability to fall back to GSM/GPRS network in case there is no 3G signal.

The 3G/UMTS module collects comprehensive measurement data from MAG 8000 at an interval down to 1 minute, allows for data transmission via numerous protocols including SMS, email via SMTP, email via SMTPS (TLS/SSL-based encryption), FTP, and FTPS (TLS/SSL-based encryption, implicit), with a customer configurable transmission interval (down to 1 hour). This provides customers with the flexibility to receive data via email, FTP or text message for the monitoring and control systems anywhere in the world.

TLS/SSL based data encryption provides a high level information security to protect customers data privacy.

The 3G/UMTS module offers

- Remote Qualification Certificate feature to enable the offsite diagnostic and audit on devices installed anywhere in the world
- 2-channel analog input measurement for external ratiometric pressure transmitter, transmission together with flow measurement (2-in-1 solution)
- 4-20 mA alarm signal detection and realtime SMS alarm for tamper protection and flooding situations
- Real-time clock synchronization with internet NTP server, ensuring that all measurement data is accurately time-stamped
- Data transmission at customer-specified points in time, allowing for synchronization of information from multiple MAG 8000 devices

The OPC server specifically designed for the MAG 8000 3G/UMTS module is offered free of charge. With this value-added package, the opportunity for measurement data collection and further processing/analyzing for system integration and automation is offered.

The package of information retrieved via the csv file includes:

- Time stamp
- Flow rate
- Tot 1
- Tot 2
- Tot 3
- Analog 1 (mA)
- Analog 2 (V)
- Battery lifetime
- Alarm list (as decimal format)

Circuit diagrams

Electrical installation of 3G/UMTS module

1. SIM card slot
2. 3G module's antenna connector
3. Analog inputs inlet
4. Rechargeable battery inlet

© Siemens 2020

Selection and ordering data

Accessories

Description	Article No.	
PC Flow Tool on CD (Download for free from http://www.siemens.com/flow)	**FDK:087L6001**	
IrDA infrared interface adapter with USB for data acquisition with 1.2 m (3.9 ft) cable	**FDK:087L4163**	
Battery backup for mains power supply, 1 pc. D-cell (3.6 V, 16.5 Ah)[1]	**A5E03354392**	
Rechargeable Lithium battery for MAG 8000 3G/UTMS communication module[1]	**A5E03436686**	
Internal battery pack, one set of 2 D-cell (3.6 V, 33 Ah) and accessories for replacement[1] incl. NBR O-ring	**FDK:087L4150**	
External battery pack IP68/ NEMA 6P with connector, 4 D-cell (3.6 V, 66 Ah)[1]. Order cable FDK:087L4152 separately.	**FDK:087L4151**	
Mains power supply 12 ... 24 V AC/DC (average power consumption during line ≤ 0.1 VA) with battery backup and 3 m (9.8 ft) power cable for external connection (backup battery not included) Temperature range: Fixed laying: -40 ... +90 °C (-40 ... +194 °F) Flexible application: -30 ... +80 °C (-22 ... +176 °F)	**FDK:087L4210**	
Mains power supply 115 ... 230 V AC, 50/60 Hz, with battery backup up and 3 m (9.8 ft) power cable for external connection (backup battery not included)	**FDK:087L4211**	
RS 232 add-on module, point to point communication interface with Modbus RTU protocol	**FDK:087L4212**	
RS 485 add-on module, multidrop communication interface with Modbus RTU protocol	**FDK:087L4213**	
Encoder interface module, with "Sensus" protocol for ITRON 200WP and 100W radio	**A5E02475650**	
MAG 8000 3G/UMTS module. Rechargeable battery, antenna and analog cable input must be ordered separately	**A5E41011589**	

Description	Article No.	
One cable entry 2 ... 5 mm (0.08 ... 0.20 ") M12 brass glands with M20 reduction[2] . Package of 10 pcs, for 3G/UMTS module antenna cable, power cable of external battery pack, encoder card cable.	**FDK:087L4154**	
One cable entry 6 ... 8 mm (0.24 ... 0.31 ") M20 brass glands package[2] (10 pcs), for pulse output cable or MODBUS cable, Cello cable or mains power supply	**FDK:087L4155**	
One cable entry 8 ... 11 mm (0.31 ... 0.43 ") M20 brass glands package[2] (10 pcs), for SOFREL cable	**FDK:087L4156**	
One cable entry 11 ... 15 mm (0.43 ... 0.59 ") M20 brass glands package[2] (10 pcs)	**FDK:087L4157**	
Two cable entries 3.5 ... 5 mm (0.14 ... 0.20 ") M20 brass glands package[2] (10 pcs)	**FDK:087L4158**	
Two cable entries 5.5 ... 7.5 mm (0.22 ... 0.30 "), M20 brass glands package[2] (10 pcs)	**FDK:087L4159**	
High gain antenna for MAG 8000 3G/UMTS (PVC, IP68, cable length 5 m (16.4 ft), with SMA male connector (type RG 58) and internal antenna adaptor cable, and single entry cable gland)	**A5E40957990**	
Analog input cable for MAG 8000 3G/UMTS (2.5 m (8.2 ft) cable with M12 connector (IP67) A-Coding female 5 pins, and two-entry cable gland)	**A5E03436698**	
Potting kit for terminal box of flow sensors for IP68/NEMA 6P	**FDK:085U0220**	
MAG 8000 Hardware key to access protected parameters	**FDK:087L4165**	
MAG 8000 demo - training unit pack operating on Alkaline batteries. Transmitter with Flow tool CD, IrDA interface adapter and hardware key (No dangerous goods limitations)	**FDK:087L4080**	
Antenna adaptor cable for 3G/UMTS module (2 pieces)	**A5E41896494**	

© Siemens 2020

Selection and ordering data (continued)

Description	Article No.	
Service adaptor for 3G/UMTS module	**A5E03436699**	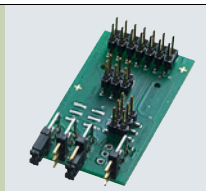
Alkaline battery for MAG 8000 demo transmitter (3 V 13 Ah) (No dangerous goods limitations)	**FDK:087L4142**	

[1] Lithium batteries are subject to special transportation regulations according to United Nations "Regulation of Dangerous Goods, UN 3090 and UN 3091". Special transport documentation is required to observe these regulations. This may influence both transport time and costs.

[2] For cable connection through MAG 8000 transmitter bottom part.

When MAG 8000 (7ME6810 and 7ME6820) is installed in PVC or coated pipelines, grounding rings must be installed additionally.

Grounding rings, type C must be used for the 7ME6810 and 7ME6820 routes (sizes > DN 300). Please see grounding rings in the section MAG 3100 Grounding rings and be aware that the mentioned MLFB codes include only 1 grounding ring. Grounding rings DN 25 to DN 300 in stainless steel are packed in pairs and sold as a "grounding ring kit".

Dimension	Article No.	
DN 25	**A5E01002946**	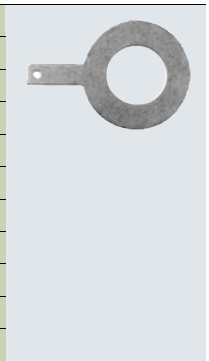
DN 40	**A5E01002947**	
DN 50	**A5E01002948**	
DN 65	**A5E01002950**	
DN 80	**A5E01002952**	
DN 100	**A5E01002953**	
DN 125	**A5E01002954**	
DN 150	**A5E01002955**	
DN 200	**A5E01002957**	
DN 250	**A5E01002958**	
DN 300	**A5E01002962**	

Spare parts

Description	Article No.	
MAG 8000 transmitter compact replacement kit[1]. No battery included. With original product label. System number specified by ordering	**FDK:087L4166**	
MAG 8000 transmitter remote replacement kit[1] No battery included. With original product label. System number specified by ordering	**FDK:087L4202**	
MAG 8000 (Advanced version) transmitter compact replacement kit[1] No battery included. With blank product label. No system number required	**FDK:087L4203**	
MAG 8000 (Advanced version) transmitter remote replacement kit[1] No battery included No system number required	**FDK:087L4204**	
MAG 8000 (Basic version) transmitter PCB replacement kit[1] No system number required	**A5E01171569**	
MAG 8000 (advanced version) transmitter PCB replacement kit[1] No system number required	**FDK:087L4168**	
Enclosure top including plastic lid, screws, O-ring and blank product label	**FDK:087L4167**	
Power cable 1.5 m (4.9 ft) with IP68/NEMA 6P plugs for external battery (no battery included); PE jacket, ambient temperature: -20 °C ... +60 °C (-4 °F ... 140 °F)	**FDK:087L4152**	

© Siemens 2020

Selection and ordering data (continued)

Description	Article No.	
Encoder interface cable with IP68/NEMA 6P plugs included, for ITRON 200WP and 100W radio; 22 AWG stranded TC conductors, polypropylene insulation, twisted pair, overall Beldfoil shield, 22 AWG stranded TC drain wire, PVC jacket Lenght: 152.4 cm (5 ft)	**A5E02551263**	
Encoder interface cable with IP68/NEMA 6P plugs included, for ITRON 200WPradio; 22 AWG stranded TC conductors, polypropylene insulation, twisted pair, overall Beldfoil shield, 22 AWG stranded TC drain wire, PVC jacket Lenght: 762 cm (25 ft)	**A5E02551182**	
Service tool kit package with various component for service and replacement. Content: 10 × plastic top lids 20 × screws 10 × wire holders 10 × battery cups 10 × greased O-rings 20 × clamp kits 10 × IrDA adaptor holding rings	**FDK:087L4162**	
Remote cable set with IP68/NEMA 6P plugs:		
• 5 m (16.4 ft) – PG 13.5[2]	**FDK:087L4108**	
• 5 m (16.4 ft) – M20	**A5E00862482**	
• 10 m (32.8 ft) – PG 13.5[2]	**FDK:087L4109**	
• 10 m (32.8 ft) – M20	**A5E00862487**	
• 20 m (65.6 ft) – PG 13.5[2]	**FDK:087L4110**	
• 20 m (65.6 ft) – M20	**A5E00862492**	
• 30 m (98.4 ft) – PG 13.5[2]	**FDK:087L4111**	
• 30 m (98.4 ft) – M20	**A5E00862497**	
Cable set with pre-mounted conduit adaptor		
• 10 m	**A5E33400834**	
• 20 m	**A5E33400836**	

[1] Not applicable to custody transfer (CT) verified systems without re-verification

[2] For sensors produced before October 2007

MAG 8000 (7ME6880) grounding ring service kit, consisting of 2 pcs. grounding rings (AISI 304/1.4301), screws and gaskets.

Dimension		Article No.	
Drilled pattern flanges (7 bar)			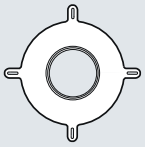
DN 50	2"	**A5E03082907**	
DN 65	2½"	**A5E03082908**	
DN 80	3"	**A5E03082909**	
DN 100	4"	**A5E03082910**	
DN 125	5"	**A5E03082911**	
DN 150	6"	**A5E32877967**	
DN 200	8"	**A5E03082913**	
DN 250	10"	**A5E03082914**	
DN 300	12"	**A5E03082915**	
DN 350	14"	**A5E03082916**	
DN 400	16"	**A5E03082917**	
DN 450	18"	**A5E03082918**	
DN 500	20"	**A5E03082919**	
DN 600	24"	**A5E03082920**	
AS 2191 table E flanges			
DN 25	1"	**A5E33474999**	
DN 40	1½"	**A5E33475000**	
DN 125	5"	**A5E33475006**	
AS 4087 PN 16 flanges			
DN 50	2"	**A5E33475001**	
DN 65	2½"	**A5E33475002**	
DN 80	3"	**A5E33475003**	
DN 100	4"	**A5E33475004**	
DN 150	6"	**A5E33475007**	
DN 200	8"	**A5E33475008**	
DN 250	10"	**A5E33475009**	
DN 300	12"	**A5E33475010**	
DN 350	14"	**A5E33475011**	
DN 400	16"	**A5E33475012**	
DN 450	18"	**A5E34240921**	
DN 500	20"	**A5E33475013**	
DN 600	24"	**A5E33475014**	
DN 700	28"	**A5E33414889**	
DN 800	32"	**A5E33414890**	
DN 900	36"	**A5E33414891**	
DN 1000	40"	**A5E33414892**	
DN 1200	48"	**A5E33414893**	

Operating instructions for SITRANS F M MAG 8000

Description	Article No.
• English	**A5E03071515**
• German	**A5E00740986**

All literature is available to download for free, in a range of languages, at
http://www.siemens.com/processinstrumentation/documentation

Operating instructions for MAG 8000 3G/UMTS communication module

Description	Article No.
• English	**A5E03644134**

© Siemens 2020

Overview

SITRANS FC Coriolis mass flowmeters are designed for measurement of a variety of liquids and gases. The meter offers accurate measurement of mass flow, volume flow, density, temperature and fraction.

Compatibility between transmitters and sensors

Transmitter	Page	Compact	Remote	Ex-Approval	Sensor	Page
FCT030	3/155	Yes	Yes	Yes	FCS300, DN 15 ... DN 150	3/167
		Yes	Yes	Yes	FCS400, DN 15 ... DN 50	3/187
		No	Yes	Yes	MASS 2100, DI 1.5	3/203; 3/218
		Yes	Yes	Yes	MASS 2100, DI 3 ... DI 15	3/203; 3/218
		No	Yes	Yes	FC300, DN 4	3/203; 3/218
FCT010	3/161	Yes	No	Yes	FCS300, DN 15 ... DN 150	3/167
		Yes	No	Yes	FCS400, DN 15 ... DN 50	3/187
		No	Yes	Yes	MASS 2100, DI 1.5	3/203; 3/223
		Yes	Yes	Yes	MASS 2100, DI 3 ... DI 15	3/203; 3/223
		No	Yes	Yes	FC300, DN 4	3/203; 3/223
FCT070	3/164	No	Yes	Yes	FCS300, DN 15 ... DN 150	3/167
		No	Yes	Yes	FCS400, DN 15 ... DN 50	3/187
		No	Yes	Yes	MASS 2100, DI 1.5	3/203; 3/227
		No	Yes	Yes	MASS 2100, DI 3 ... DI 15	3/203; 3/227
		No	Yes	Yes	FC300, DN 4	3/203; 3/227
SIFLOW FC070	3/240	No	Yes	Yes	FC300, DN 4	3/203
		No	Yes	Yes	MASS 2100, DI 1.5	3/203
		No	Yes	Yes	MASS 2100, DI 3 ... DI 15	3/203

© Siemens 2020

Benefits

Greater flexibility

- Wide product program
- High performance and top-end flowmeters
- Compact or remote installation using the same transmitters and sensors within their flowmeter series
- Full integration in SIMATIC solutions

Easier commissioning

All SITRANS FC Coriolis flowmeters feature a sensor related memory unit SensorFlash which stores calibration data and transmitter settings for the lifetime of the product as well as all product documentation and certificates.

At commissioning the flowmeter commences measurement without any initial programming.

Easier service

- Comprehensive self-diagnosis and service menu enhances troubleshooting and meter verification.
- Transmitter replacement requires no programming. SensorFlash data updates all settings after initialization.

Room for growth

- FC330/FC310:
  Digital platform allows for any sensor in the range DN 15 to DN 150 to be matched in compact or remote installation.
- FC430/FC410:
  Robust and compact sensor dedicated for OEM and skid manufacturer in sizes DN 15 to DN 50. Also available in a true sanitary version.
- MASS 2100/FC300 DN 4 sensors with FCT digital platform transmitters allows all sensors from DI 1.5 to DI 15 to be matched with the FCT010, FCT030 and FCT070 transmitters.
- FCT070 transmitter solution as a fully integrated technology module in SIMATIC ET 200SP. Seamless communicating with all SIMATIC solutions by very fast PROFINET communication. Advanced batch function blocks are available.

Application

Coriolis flowmeters are generally suitable for measuring liquids and gases. The flow measurement is to a large extend independent of changes in process conditions/parameters such as temperature, density, pressure, viscosity, conductivity and flow profile.

Due to this versatility the meter is easy to install and use. The Coriolis flowmeter is recognized for its high accuracy over a wide turn-down ratio and its ability to be a true multi parameter devise.

The main applications of the Coriolis flowmeter can be found in all industries, such as:	
Chemical	Detergents, bulk chemicals, pharmaceuticals, acids, alkalis, filling and dosing
Food and beverage	Dairy products, beer, wine, softdrinks, °Plato/°Brix, fruit juices and pulps, bottling, CO2 dosing, CIP liquids
Automotive	Fuel injection nozzle and pump testing, filling of AC units, engine consumption measurement, paint robots
Oil and gas	Filling of gas bottles, furnace control, test separators, LPG, well-head water-cut monitoring. All hydrocarbon fluids in refineries
Marine	Fuel consumption management, boiler control, bunkering management
Water & waste water	Dosing of chemicals for water treatment

© Siemens 2020

Application (continued)

Please see Product selector

www.pia-selector.automation.siemens.com

on the Internet, since some constrains might be related to some of the features

	FC310	FC330	FCS300 with FCT070	FC410	FC430	FCS400 with FCT070	MASS 2100 DI 1.5 FC300 DN 4 with FCT010	MASS 2100 DI 1.5 FC300 DN 4 with FCT030	MASS 2100 DI 1.5 FC300 DN 4 with FCT070	MASS 2100 with FCT010	MASS 2100 with FCT030	MASS 2100 with FCT070
	7ME4631	7ME4633	7ME4637	7ME4611	7ME4613	7ME4617	7ME4811	7ME4813	7ME4817	7ME4811	7ME4813	7ME4817
Design												
Compact	●	●		●	●					●	●	
Remote		●	●		●	●	●	●	●	●	●	●
Transmitter enclosure												
Aluminium IP67 Field mounting enclosure	●	●		●	●		●	●		●	●	
Aluminum IP67 Wall mounting enclosure		●			●			●			●	
Noryl (FCT070), IP20/NEMA 2			●			●			●			●
Communication												
HART		●			●			●			●	
PROFIBUS PA		●			●			●			●	
PROFIBUS DP		●			●			●			●	
MODBUS RTU/RS 485	●	●		●	●		●	●		●	●	
SIMATIC integration ET200SP ST & HF (Profinet)			●			●			●			●
Supply voltage												
24 V DC	●	●	●	●	●	●	●	●	●	●	●	●
115/230 V AC		●			●			●			●	
Pipe size												
DI 1,5 (1/16")							●	●	●			
DI 3 (1/8")										●	●	●
DN 4 (1/6")							●	●	●			
DI 6 (¼")										●	●	●
DI 15 (½")										●	●	●
DN 15 (½")	●	●	●	●	●	●						
DN 25 (1")	●	●	●	●	●	●						
DN 50 (2")	●	●	●	●	●	●						
DN 80 (3")	●	●	●									
DN 100 (4")	●	●	●									
DN 150 (6")	●	●	●									

© Siemens 2020

Application (continued)

Please see Product selector

www.pia-selector.automation.siemens.com

on the Internet, since some constrains might be related to some of the features

	FC310	FC330	FCS300 with FCT070	FC410	FC430	FCS400 with FCT070	MASS 2100 DI 1.5 FC300 DN 4 with FCT010	MASS 2100 DI 1.5 FC300 DN 4 with FCT030	MASS 2100 DI 1.5 FC300 DN 4 with FCT070	MASS 2100 with FCT010	MASS 2100 with FCT030	MASS 2100 with FCT070
	7ME4631	7ME4633	7ME4637	7ME4611	7ME4613	7ME4617	7ME4811	7ME4813	7ME4817	7ME4811	7ME4813	7ME4817
Process connection norms and pressure												
Pipe thread												
NPT ANSI/ASME B.20.1; PN 100	●	●	●	●	●	●	●	●	●	●	●	●
ISO 228/1; PN 100	●	●	●	●	●	●	●	●	●	●	●	●
Flange												
EN 1092-1 PN 16	●	●	●	●	●	●						
EN 1092-1 PN 40	●	●	●	●	●	●				●	●	●
EN 1092-1 PN 63	●	●	●	●	●	●						
EN 1092-1 PN 100	●	●	●	●	●	●				●	●	●
ANSI B 16.5 Class 150	●	●	●	●	●	●				●	●	●
ANSI B 16.5 Class 300	●	●	●	●	●	●						
ANSI B 16.5 Class 600	●	●	●	●	●	●				●	●	●
ANSI B 16.5 Class 900[1)]	●	●	●	●	●	●						
ANSI B 16.5 Class 1500[1)]	●	●	●									
JIS B2220 10K	●	●	●	●	●	●						
JIS B2220 20K	●	●	●	●	●	●						
JIS B2220 40K	●	●	●									
JIS B2220 63K	●	●	●									
Hygenic												
DIN 11851	●	●	●	●	●	●				●	●	●
DIN32676 Clamp Form C Triclamp				●	●	●						
DIN 32676 Clamp (ISO) Row A	●	●	●									
DIN11864-1 GS Form A Row A				●	●	●						
DIN11864-2 BF Form A Row A				●	●	●						
DIN11864-3 BKS Form A Row A				●	●	●						
ISO 2852 Clamp				●	●	●				●	●	●
ISO 2853 Threat				●	●	●				●	●	●
SMS 1145	●	●	●	●	●	●						
Others on request	●	●	●	●	●	●				●	●	●

© Siemens 2020

Application (continued)

Please see Product selector

www.pia-selector.automation.siemens.com

on the Internet, since some constrains might be related to some of the features

	FC310	FC330	FCS300 with FCT070	FC410	FC430	FCS400 with FCT070	MASS 2100 DI 1.5 FC300 DN 4 with FCT010	MASS 2100 DI 1.5 FC300 DN 4 with FCT030	MASS 2100 DI 1.5 FC300 DN 4 with FCT070	MASS 2100 with FCT010	MASS 2100 with FCT030	MASS 2100 with FCT070
	7ME4631	7ME4633	7ME4637	7ME4611	7ME4613	7ME4617	7ME4811	7ME4813	7ME4817	7ME4811	7ME4813	7ME4817
Pipe material												
Stainless steel AISI 316L/1.4435/1.4404	●	●	●	●	●	●	●	●	●	●	●	●
Nickel-Alloy C4	●	●	●									
Hastelloy C22/2.4602							●	●	●	●	●	●
With heating jacket												
Internal U-Tube										●	●	●
Heating jacket electrical (optional)				●	●	●						
Pressure rating												
PN 16	●	●										
PN 40	●	●		●						●	●	●
PN 63	●	●		●								
PN 100	●	●	●	●	●	●	●	●	●	●	●	●
PN 130							●	●	●	●	●	●
PN 160					●[5]	●[5]	●[5]					
PN 230						●	●	●	●	●	●	●
PN 265										●	●	●
PN 350						●				●	●	●
PN 365							●	●	●	●	●	●
PN 410										●	●	●
High-pressure version[2]							●	●	●	●	●	●
Accuracy (liquids)												
Flow error ≤ 0.1 % of rate[3]	●	●	●	●	●	●	●	●	●	●	●	●
Flow error ≤ 0.2 % of rate[3]	●	●	●									
Density error ≤ 0.0005 g/cm^3				●	●	●				●	●	●
Density error ≤ 0.005 g/cm^3				●	●	●				●	●	●
Density error ≤ 0.001 g/cm^3							●	●	●			
Density error ≤ 0.002 g/cm^3	●	●	●									
Density error ≤ 0.010 g/cm^3	●	●	●									
Cable glands												
½" NPT	●	●	●	●	●	●	●	●	●	●	●	●
M20	●	●	●	●	●	●	●	●	●	●	●	●

© Siemens 2020

Application (continued)

Please see Product selector

www.pia-selector.automation.siemens.com

on the Internet, since some constrains might be related to some of the features

	FC310	FC330	FCS300 with FCT070	FC410	FC430	FCS400 with FCT070	MASS 2100 DI 1.5 FC300 DN 4 with FCT010	MASS 2100 DI 1.5 FC300 DN 4 with FCT030	MASS 2100 DI 1.5 FC300 DN 4 with FCT070	MASS 2100 with FCT010	MASS 2100 with FCT030	MASS 2100 with FCT070
	7ME4631	7ME4633	7ME4637	7ME4611	7ME4613	7ME4617	7ME4811	7ME4813	7ME4817	7ME4811	7ME4813	7ME4817
Approvals												
Hazardous locations												
ATEX zone 1	●	●	●	●[6]	●[6]	●[6]	●	●	●	●	●	●
IECEx zone 1	●	●	●	●[6]	●[6]	●[6]	●	●	●	●	●	●
EAC Ex zone 1	●	●	●	●	●	●	●	●	●	●	●	●
US /CSA) Div 1	●	●	●	●	●	●	●	●	●	●	●	●
Canada (CSA) zone 1	●	●	●	●	●	●	●	●	●	●	●	●
NEPSI	●	●	●	●	●	●						
INMETRO	●	●	●	●	●	●						
PED												
Fluid group 1 Category III, gas PED Directive 2014/68/EU	●	●	●	●	●	●	●	●	●	●	●	●
CRN												
Category F, OF10769.5C CRN	●	●	●	●	●	●	●	●	●	●[4]	●[4]	●[4]
F&B/Pharma												
EHEDG (in preparation)				●	●	●						
3A (in preparation)				●	●	●						
Marine												
Germanischer Lloyd/det Norske Veritas, Bureau Veritas, Lloyds of London, American Bureau of Shipping, Rina, CCS	●	●		●	●							

● = Available

1) Sensor pressure and temperature limited to ANSI class 600 rating.
2) See technical specifications.
3) Increased error for gas mass flow measurement.
4) Only DI 6 is CRN.
5) Max. 100 bar.
6) Also for dust zone 21.

© Siemens 2020

Function

The SITRANS FC flow measuring principle is based on the Coriolis effect. The flowmeter consists of a sensor and a transmitter. The sensor can be digital with an integrated frontend DSL or for low flow sensors also analogue sensors directly connected to the transmitter.

There are following sensors available:

- SITRANS FC MASS 2100 DI 1.5 to DI 15 mm in a single loop design
- SITRANS FC300 DN 4 in a single loop design
- SITRANS FCS300 DN 15 to DN 150 mm in bended dual tube design
- SITRANS FCS400 DN 15 to DN 50 mm in a compact bended dual tube design for OEM and other specific applications.

All sensors can be freely combined with three different transmitters in various configurations and protection style.

- SITRANS FCT010 transmitter: single channel Modbus
- SITRANS FCT030 transmitter: multi channel transmitter with full graphical display and full feature loaded.
- FCT070 transmitter: for full integration in the Siemens SIMATIC TIA and PCS7 world by the ET 200SP ST & HF. Full functionality including advanced functions blocks for easy integration. Functions block in TIA and APL library.

The SITRANS FC sensors are energized by an electro-mechanical driver circuit which oscillates the pipe at its resonant frequency.

Two pick-ups, 1 and 2 are placed symmetrically on both sides of the driver. When liquid or gas flows through the sensor, Coriolis force will act on the measuring pipe and cause a pipe deflection which can be measured as a phase shift on pick-up 1 and 2. The phase shift is proportional to the mass flow rate.

The amplitude of the driver is automatically regulated to ensure a stable output from the 2 pick-ups. The temperature of the tubes is measured by a Pt1000. The flow-proportional signal from the 2 pick-ups, the temperature measurement and the driver frequency are fed into the SITRANS FC transmitter for calculations of mass, volume, fraction, temperature and density.The signal transfer function is based on a DFT technology (Discrete Fourier Transformation).

The transmitter has built-in noise filters, which can be used to improve the meter's performance if the installation and application conditions are not ideal. Typically influence from process noise such as pump pulsations, mechanical vibrations, oscillating valves and aerated flowconditions can be reduced considerably.

SensorFlash flow memory units

FCT010 flow transmitters communicate via Modbus RTU and FCT030 via HART/Modbus/PROFIBUS DP / PROFIBUS PA beside up to 4 individual I/O free programmable as analogue , frequency, pulse or relay outputs. As well as static inputs can be set up.

The FCT070 transmitter is a technology module for the SIMATIC ET 200SP ST & HF system with directly connection from the digital sensor. Full transmitter functionality available to be set up directly in the SIMATIC system. The ET 200SP is very often connected to other SIMATIC systems like PCS7; S7 1200 and S7 1500 via the direct connection by PROFINET. Fast and simple signal transfer and controlling.

© Siemens 2020

Integration

General installation requirements / System design information

The SITRANS FC mass flowmeter is suitable for in- and outdoor installations. The standard instrument meets the requirements of Protection Class IP67/NEMA 4x or IP65. The flowmeter is bidirectional and can be installed in almost any orientation, however, the sensor is not self-emptying in all positions.

It is important to ensure that the meter tubes are always completely filled with homogeneous fluid. Otherwise measuring errors may occur. Suitable fluids are clean liquids, pastes, light slurries or gases. Condensing vapors, aerated liquids or slush are not recommended.

The corrosion and erosion resistance of the fluid-wetted materials must be evaluated to secure long lifetime of the sensor. The pressure drop through the sensor is a function of the properties of the fluid and the flow rate. The Sizing Program (download from https://www.siemens.com) can be used to calculate the pressure drop and the accuracy over the full flowrange in use for the application.

Sizing

Liquids: The correct sensor size is determent by the allowable pressure drop at the maximum flowrate the meter is used with. After selecting the sensor size the accuracy throughout the flowrate range for the application can be checked by using the Sizing Program.

Gases: The correct size is very often determent by the calculation of the Mach number at maximum flowrate for the application. After that the accuracy throughout the flowrange should be checked.

The preferred flow direction is indicated by the arrow on the flowmeter. Flow in this direction will be indicated as positive.

Note: For some sensor types, specific installation requirement has be taken into account. Please also see under the specific sensor type chapter.

Generel installation orientation

- FCS300 and FCS400 – sensors.
  The optimal installation orientation is vertical with flow upwards (liquids). This ensures that suspended solids or bubbles are completely pushed through the sensor. A drain valve below the sensor will allow the pipe and sensor to drain . To secure selfdraining a up to 10° off vertical installation could be required.
- MASS 2100/FC300 DN4 – sensors.
  The optimal installation orientation is horizontal.

Supports

- In order to support the weight of the flowmeter and to ensure reliable measurements when external effects exist (e.g. vibrations), the sensor should be installed in well-supported pipelines. Supports or hangers should be installed symmetrically and stress-free in close proximity to the process connections.

Shut-off devices

- To conduct a system zero adjustment, shut-off devices are ideally required in the pipeline before and after the sensor:
- A bypass valve is recommended where regular zero adjustment is planned to avoid disruption of the flowing system.

Installation: straight run requirements

- The mass flowmeter does not require any flow condition or straight inlet sections. Care should be exercised to ensure that any valves, gates, sight glasses etc. do not cavitate and are not set into vibration by the flowmeter.

System design information

- The presence of gas bubbles in the fluid may result in erroneous measurements, particularly in the density measurement. Therefore, the flowmeter should not be installed at the highest point in the system where bubbles are possibly largest.
- Long drop lines downstream from the flowmeter should be avoided to prevent the meter tube from draining during operation.
- The flowmeter should not come into contact with any other objects. Avoid attachments to the housing.
- When the cross-section of the connecting pipeline is larger than the sensor size, suitable standard reducers may be installed.
- If strong vibrations exist in the pipeline, they should be damped using elastic pipeline elements. The damping devices must be installed outside the supported flowmeter section and outside the section between the shut-off devices.
- Make sure that any dissolved gases, which are present in many liquids, do not outgas. The back pressure at the outlet should be at least 0.2 bar (3 psi).
- Assure that operation below the vapor pressure cannot occur when a vacuum exists in the meter tube or for fluids which boil readily.
- The sensor should not be installed in the vicinity of strong electromagnetic fields, e.g. near motors, pumps, transformers etc.
- When operating more than one meter in one or multiple interconnected pipelines, the sensors should be spaced distant from each other or the pipelines should be decoupled to prevent cross talk.

Zero adjustment

- In order to adjust the zero under operating conditions it must be possible to reduce the flow rate to „ZERO“ while the meter tube is completely filled. It is important for accurate measurements that during the zero adjustment there are no gas bubbles in the flowmeter. It is also important that the pressure and temperature in the meter tube be the same as that which exists during operation.

© Siemens 2020

Technical specifications

Flowmeter uncertainty/specifications

To ensure continuous accurate measurement, flowmeters must be calibrated.

The Siemens flowmeter calibration process is ISO 9001-certified, ensuring the entire calibration procedure is controlled to the highest quality standards. All primary measuring instrumentation used by the Flow Laboratory during the performance of its calibrations, has been calibrated with international standards traceability referring directly to the physical unit of measurement according to the International System of Units (SI). Therefore the calibration certificate ensures recognition of the test results worldwide, including the US (NIST traceability).

A calibration certificate is shipped with every sensor and calibration data are stored in the SD Memory card . The sensors has the calibration data written to the frontend section DSL.
A backup of all calibrations and PDF copies of all certificates are stored in the SensorFlash.

Sensor flow capacity

FCS300 sensors for liquids:

	Q_{min} at 1 % accuracy water		Q_{nom} [1]		100 % (Q_{max}) [2]	
	kg/h	(lb/min)	kg/h	(lb/min)	kg/h	(lb/min)
DN 15 (½")	70	(2.57)	4 500	(165)	8 000	(294)
DN 25 (1")	240	(8.92)	20 500	(753)	35 000	(1 286)
DN 50 (2")	800	(29.4)	49 000	(1 800)	90 000	(3 307)
DN 80 (3")	2 000	(73.5)	122 000	(4 483)	250 000	(9 186)
DN 100 (4")	4 000	(147)	273 000	(10 031)	520 000	(19 108)
DN 150 (6")	6 900	(253)	459 200	(16 873)	860 000	(31 600)

FCS400 sensors for liquids:

	Q_{min} at 1 % accuracy water [3]		Q_{nom} [1]		100 % (Q_{max}) [2]	
	kg/h	(lb/min)	kg/h	(lb/min)	kg/h	(lb/min)
DN 15 (½")	20	(0.73)	3 700	(135)	6 400	(234)
DN 25 (1")	200	(7.32)	11 500	(421)	17 700	(648)
DN 50 (2")	750	(27.4)	50 000	(1 831)	70 700	(2 590)

MASS 2100 and FC300 sensors for liquids:

	Q_{min} at 1 % accuracy water		Q_{nom} [1]		100 % (Q_{max}) [2]	
	kg/h	(lb/h)	kg/h	(lb/h)	kg/h	(lb/h)
DI 1.5 (1/16")	0.1	(0.22)	19	(42)	30	(66)
DI 3 (1/8")	1.0	(2.2)	90	(198)	250	(550)
DN 4 (1/6")	1	(2.2)	140	(308)	350	(770)
DI 6 (¼")	5	(11)	500	(1 102)	1 000	(2 200)
DI 15 (½")	20	(44)	3 800	(8 370)	5 600	(12 345)

[1] Q_{nom} = Δ 1 barg @ water 20 °C.
[2] Q_{max} = 10 m/sec @ water 20 °C at inlet (up to 25 m/s in the flowtubes).
[3] For 0.1% sensor.

For gas applications the massflow rate is depending on the gas type. The max. flowrate is calculated with the Mach-Number to be Ma = 0.3.

- For flow > 5% of the sensors max. flow rate, the error can be read directly from the curve below.
- For flow < 5 % of the sensors max. flow rate, use the formula to calculate the error.

The error curve is plotted from the formula:

$$E = \pm\sqrt{(\text{Cal.})^2 + \left(\frac{z \times 100}{qm}\right)^2}$$

E Error
Z Zero point error [kg/h] [1]
qm Mass flow [kg/h]
Cal. Calibrated flow accuracy: 0.10, 0.15 or 0.20

[1] Zero point error for each sensor is shown in the tables below.

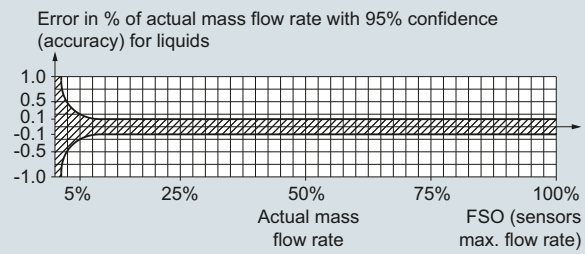

For gas applications: typical additional 0.4 % + zero point

Reference conditions for flow calibration	
Flow conditions	Fully developed flow profile
Temperature, medium	25 °C (77 °F) ± 5 K
Temperature, ambient	25 °C (77 °F) +10/-5 K
Liquid pressure	2 ± 1 bar
Density	0.997 g/cm^3
Brix	40 °Brix
Supply voltage	U_n ±1 %
Warming-up time	30 min.
Cable length	5 m between transmitter and sensor

Additions in the event of deviations from reference conditions	
Current output	As pulse output ± (0.1 % of actual flow +0.05 % FSO)
Effect of ambient temperature	• Display/frequency/pulse output: < ± 0.003 % / K act. • Current output: < ± 0.005 % / K act.
Effect of supply voltage	< 0.005 % of measuring value on 1 % alteration

© Siemens 2020

Technical specifications (continued)

Sensor type		FC300	MASS 2100			
Sensor size		**DN 4 (1/6")**	**DI 1.5 (1/16")**	**DI 3 (1/8")**	**DI 6 (¼")**	**DI 15 (½")**
Number of measuring pipes		1	1	1	1	1
Mass flow (liquids)						
Linearity error[1)]	% of rate	0.10	0.10	0.10	0.10	0.10
Repeatability of flow-rate at rates > 5 % of Q_{max}	% of rate	0.05	0.05	0.05	0.05	0.05
Max. zero point error	[kg/h]	0.010	0.001	0.010	0.050	0.200
Density (liquids)						
Density error standard	[g/cm³]	n.a.	0.008	0.008	0.008	0.008
Density error extended	[g/cm³]	0.007[2)]	0.001	0.0015	0.0015	0.0005
Repeatability error	[g/cm³]	0.0002	0.0002	0.0002	0.0002	0.0001
Range	[g/cm³]	0.3 … 2.9	0.3 … 2.9	0.3 … 2.9	0.3 … 2.9	0.3 … 2.9
Temperature						
Error	[°K]	0.5	0.5	0.5	0.5	0.5

1) Increased error can be expected for gas mass flow measurement (for gas measurement typically additional +0.40 % error).
2) For Hastelloy tubes: 0.0025 g/cm³.

Sensor type		FCS300					
Sensor size		**DN 15 (½")**	**DN 25 (1")**	**DN 50 (2")**	**DN 80 (3")**	**DN 100 (4")**	**DN 150 (6")**
Number of measuring pipes		2	2	2	2	2	2
Mass flow (liquids)							
Linearity error[1)]	0.1% sensor % of rate	0.1	0.1	0.1	0.1	0.1	0.1
	0.2% sensor % of rate	0.2	0.2	0.2	0.2	0.2	0.2
Repeatability of flow-rate at rates > 5 % of Q_{max}	% of rate	0.05	0.05	0.05	0.05	0.1	0.1
Max. zero point error	[kg/h]	0.6	2.16	7.2	20.0	41.6	68.8
Density (liquids)							
Density error	0.1% massflow sensor [g/cm³]	0.002	0.002	0.002	0.002	0.002	0.002
	0.2% massflow sensor [g/cm³]	0.010	0.010	0.010	0.010	0.010	0.010
Range	[kg/dm³]	0.001 ... 5.0	0.001 ... 5.0	0.001 ... 5.0	0.001 ... 5.0	0.001 ... 5.0	0.001 ... 5.0
Repeatability error	[kg/m³]	± 0.25	± 0.25	± 0.25	± 0.25	± 0.25	± 0.25
Temperature							
Error	[°K]	0.5	0.5	0.5	0.5	0.5	0.5

1) Increased error can be expected for gas mass flow measurement (for gas measurement typically additional +0.4 % error).

Sensor type		FCS400		
Sensor size		**DN 15 (½")**	**DN 25 (1")**	**DN 50 (2")**
Number of measuring pipes		2	2	2
Mass flow (liquids)				
Linearity error[1)]	% of rate	0.1	0.1	0.1
Repeatability of flow-rate at rates > 5 % of Q_{max}	% of rate	0.05	0.05	0.05
Max. zero point error	[kg/h]	0.2	2.0	7.5
Density (liquids)				
Density error	(Standard) [g/cm³]	0.005	0.005	0.005
	(Extended) [g/cm³]	0.0005	0.0005	0.0005
Range	[kg/dm³]	0.001 ... 5.0	0.001 ... 5.0	0.001 ... 5.0
Repeatability error	[kg/m³]	± 0.25	± 0.25	± 0.25
Temperature				
Error	[°K]	0.5	0.5	0.5

1) Increased error can be expected for gas mass flow measurement (for gas measurement typically additional up to +0.4 % error).

© Siemens 2020

Technical specifications (continued)

PROFIBUS PA/DP for FCT030

General specifications	
PROFIBUS device profile	Profile V 4.0 and compatible to V 3.x

Electrical specification DP

Physical layer specifications	
Applicable standard	IEC 61158/EN 50170
Physical Layer (transmission technology)	RS 485
Transmission speed	≤ 12 Mbits/s
Number of stations	Up to 32 per line segment (maximum total of 126)
Cable specification (Type A)	
Cable design	Two wire twisted pair
Shielding	CU shielding braid or shielding braid and shielding foil
Impedance	35 up to 165 Ω at frequencies from 3 … 20 MHz
Cable capacity	< 30 pF per meter
Core diameter	> 0.34 mm^2, corresponds to AWG 22
Resistance	< 110 Ω per km
Signal attenuation	Max. 9 dB over total length of line section
Max. bus length	100 m at 12 Mbit/s, up to 1.2 km at 93.75 kbit/s. Extendable by repeaters

Electrical specification PA

Physical layer specifications	
Applicable standard	IEC 61158/EN 50170
Physical Layer (transmission technology)	IEC 61158-2
Transmission speed	31.25 Kbits/s
Number of stations	Up to 32 per line segment (maximum total of 126)
Max. basic current [I_B]	14 mA
Fault current [I_{FDE}]	0 mA
Bus voltage	9 … 32 V (non Ex)
Preferred cable specification (Type A)	
Cable design	Two wire twisted pair
Conductor area (nominal)	0.8 mm^2 (AWG 18)
Loop resistance	44 Ω/km
Impedance	100 Ω ± 20 %
Wave attenuation at 39 kHz	3 dB/km
Capacitive asymmetry	2 nF/km
Bus termination	Passive line terminated on both ends
Max. bus length	Up to 1.9 km. Extendable by repeaters

IS (Intrinsic Safety) data	
Required sensor electronics	Compact mounted SITRANS FCT030
FISCO	Yes
Max. U_I	17.5 V
Max. I_I	380 mA
Max. P_I	5.32 V
Max. L_I	10 µH
Max. C_I	5 nF
Max. U_O	1.3 V
Max. I_O	50 µA
FISCO cable requirements	
Loop resistance R_C	15 … 150 Ω/km
Loop inductance L_C	0.4 … 1 mH/km
Capacitance C_C	80 … 200 nF/km
Max. Spur length in IIC and IIB	30 m
Max. Trunk length in IIC	1 km
Max. Trunk length in IIB	5 km

PROFIBUS parameter support

The following parameters are accessible using a Class 1 Master.

Cyclic services		
Input (Master view)	**Parameter**	**FCT030**
	Mass flow	✓
	Volume flow	✓
	Media temperature	✓
	Frame temperature	✓
	Standard volume flow	✓
	Density	✓
	Fraction A[1)]	✓
	Fraction B[1)]	✓
	Pct Fraction A[1)]	✓
	Pct Fraction B[1)]	✓
	Totalizer 1	✓
	Totalizer 2	✓
	Totalizer 3	✓
	Digital dosing control	✓
	Analog dosing control	✓
	Dosing status	✓
Output (Master view)	Control totalizer 1+2+3	✓
	Control commands as zero point adjustment	✓

1) Requires a flowmeter ordered with fraction option.

© Siemens 2020

Overview

FCT030 is based on the latest developments within digital signal processing technology – engineered for high measuring performance, fast response to step changes in flow, fast dosing applications, high immunity against process noise, easy to install commission and maintain.

The FCT030 transmitter delivers true multi-parameter measurements i.e. massflow, volumeflow, standard volumeflow, density, temperature and fraction.

The FCT030 IP67 transmitter can be remote connected or compact mounted with all sensors of type FCS300 sizes DN 15 to DN 150, FCS400 sizes DN 15 to DN 50, MASS 2100 DI 1.5, DI 3, DI 6, DI 15 and FC300 DN 4.

Fraction

The transmitter FCT030 can be set up at works to measure and report various fraction concentrations of two-part mixtures or solutions. Where a discrete relationship exists between concentration and density at particular temperatures a calculation is performed and the percentage concentration by volume or mass of Part A or Part B (100 % minus Part A) is measured. For solutions and some mixtures the total mass, or dry weight, is also available.

In some industries, a selection of standard density scales has been adopted to represent the density or relative density of the process fluid.

If "Standard fractions" option is chosen at ordering, the following fraction or standard density scales can be selected in the setup menu:

- API number
- Balling
- °Baumé light
- °Baumé heavy
- °Brix
- °Oeschlé
- Plato
- Specific Gravity
- Twaddell
- %HFCS42
- %HFCS55
- %HFCS90
- Ethanol-Water (ABM)[1] 0 % to 20 %
- Ethanol-Water (ABM)[1] 15 % to 35 %
- Ethanol-Water (ABM)[1] 30 % to 55 %
- Ethanol-Water (ABM)[1] 50 % to 100 %

[1] ABM: Alcohol by Mass
ABV: Alohol by volume on request

Benefits

Flow calculation and measurement

- Dedicated mass flow calculation with DSP technology
- Fast dosing and flow step response with maximum 10 ms response time
- 100 Hz update rate to all outputs
- Maximum data age from pickup to output is 20 ms (two update cycles)
- Independent low flow cut-off settings for mass and volume flowrates
- Automatic zero-point adjustment on command from discrete input or host system
- Empty pipe monitoring

Operation and display

- User-configurable operation display
  - Full graphical display 240 × 160 pixels with up to 6 programmable views
  - Self-explaining alarm handling/log in clear text
  - Help text for all parameters appears automatically in the configuration menu
  - Keypad can be used for controlling dosing as start/stop/hold/reset
- SensorFlash technology stores production specific system documentation and provides removable memory of all flowmeter setups and functions
  - Calibration certificates
  - Pressure and material test certificates (as ordered)
  - Non-volatile memory backup of operational data
  - Transfer of user configuration to other flowmeters
  - Alarm history log
  - Parameter change log
  - Logging of min and max process values
  - Data logging of process values and parameter (including diagnostic parameters)

Alarms and safety

- Advanced diagnosis and service menu enhances troubleshooting and meter validation
- Configurable upper and lower alarm and warning limits for all process values
- Alarm handling can be selected between Siemens and NAMUR standard configurations

Outputs and control

- Built-in dosing controller with compensation and monitoring comprising 3 built-in totalizers
- Multi-parameter outputs, individually configurable for massflow, volumeflow, standard volumeflow, density, temperature or fraction flow such as °Brix or °Plato

Up to four I/O channels are configured as follows:

Channel 1

Channel 1 is 4 to 20 mA analog output with HART 7.5, PROFIBUS PA, PROFIBUS DP or Modbus RS 485 RTU. The current signal can be configured for massflow, volumeflow or density, standard volume flow, medium temperature, Fraction A and B and Fraction A% and B%.

Channel 2

Channel 2 is a signal output which can be freely configured for any process variable.

© Siemens 2020

Benefits (continued)

- Analog current (0/4 to 20 mA)
- 3 stage analog valve dosing control
- Frequency or pulse
- Digital one or two-valve dosing control in combination with channel 3 or 4
- Operational and alarm status

Channels 3 and 4

Channels 3 and 4 can be ordered with signal (freely configured for any process variable) or relay outputs, or signal input.

Signal

Signal output can be user configured to:

- Analog current (0/4 to 20 mA)
- 3 stage analog valve dosing control
- Frequency or pulse
- Redundant frequency or pulse (linked to Channel 2)
- Digital one or two-valve dosing control
- Operational and alarm status

Relay

Relay output(s) can be user configured to:

- Digital one or two-valve dosing control
- Operation status including flow direction
- Alarm status

Signal input

Signal input can be user configured for

- Dosing control
- Totalizer reset functions
- Force or freeze output(s)
- Inititate automatic zero point adjustment

Signal outputs and inputs for non hazardous areas can be changed for active or passive operations by dip switch.

For hazardous areas Signal outputs and inputs can't be changed by dip switch, and has to selected individually by ordering.

During service and maintenance all outputs can be forced to a preset value for simulation, verification or calibration purposes.

Approvals and certificates

The FCT030 coriolis flowmeter program was designed from the ground up to comply with or exceed the requirements of international standards and regulations.

Application

SITRANS FCT030 transmitters are suitable for applications within the entire process industry where there is a demand for accurate flow measurement. The meter is capable of measuring both liquid and gas flow.

Coriolis flowmeters can be applied in all industries, such as:

- Chemical & Pharma: detergents, bulk chemicals, acids, alkalis, paint mixing systems, solvents and resins, pharmaceuticals, blood products, vaccines, insulin production
- Food & Beverage: dairy products, beer, wine, soft drinks, °Brix/°Plato, fruit juices and pulps, bottling, CO2 dosing, CIP/SIP-liquids, mixture recipe control
- Automotive: fuel injection nozzle & pump testing, filling of AC units, engine consumption
- Oil & Gas: filling of gas bottles, furnace control, test separators
- Hydrocarbon processing: oil refining, derivatives manufacturing, polymerisation
- Water & Waste Water: dosing of chemicals for water treatment

The multiple outputs and bus communication mean that all of the process information can be read either instantaneously (10 ms update) or periodically as plant operation requires.

Design

The transmitter SITRANS FCT030 is designed in an IP67/NEMA 4X aluminum enclosure with corrosion resistant coating. It can be remote connected or compact mounted with the following sensors:

- FCS300 DN 15, DN 25, DN 50, DN 80, DN 100, DN 150
- FCS400 DN 15, DN 25 and DN 50
- MASS 2100 DI 1.5, DI 3, DI 6, DI 15
- FC300 DN 4

FCT030 is available with current output HART 7.5, Modbus RS 485 RTU, PROFIBUS DP or PROFIBUS PA as standard on Channel 1.

The transmitter has a modular design with discrete, replaceable electronic modules and connection boards to maintain separation between functions and facilitate field service. All modules are fully traceable and their provenance is included in the transmitter setup.

SensorFlash

SensorFlash is a standard, 4 GByte micro SD card with the ability to be updated by PC. It is supplied with each sensor with the complete set of certification documents including calibration report. Material, pressure test, factory conformance certificates are optional at ordering.

The Siemens SensorFlash memory unit offers the following features and benefits:

- Automatically program any similar transmitter in seconds to the operation standard
- Transmitter replacement in less than 5 minutes
- True "plug & play" provided by integrated cross-checking data consistency and HW/SW version verification
- Permanent memory of operational and functional information from the moment that the flowmeter is switched on
- New firmware updates can be downloaded from the Siemens internet portal for Product Support and placed onto SensorFlash (unmounted from the transmitter and inserted into a PC's SD card slot). The firmware is then inserted into the existing flowmeter and the complete system upgraded.
- Storing of alarm history log
- Storing of parameter change log
- Storing of process peak values log

Dataloggin on SensorFlash

The following functions are available:

- Logging of process values and diagnostic values simultaneous
- Logging of parameter settings
- Selectable logging interval

© Siemens 2020

Function

The following functions are available:

- Mass flowrate, volume flowrate, density, process temperature, frame temperature, fraction flow
- Up to four output/input channels selected at ordering
- Outputs can be individually configured with mass, volume, density etc.
- Three built-in totalizers which can count forward, backward or forward and backward
- Low flow cut-off, adjustable
- Density cut-off or empty pipe cut-off, adjustable
- Flow direction adjustable
- Alarm system consisting of alarm-log, alarm pending menu
- Internal data logger is updated each 10 minutes with operational data such as system health, totalizer values, all configurations and data needed for custody transfer requirements to OIML R 117 and NTEP
- Display of operating time with real-time clock. Daylight saving time is not implemented
- Uni/bidirectional flow measurement
- Flowrate outputs are freely configurable between maximum negative and maximum positive flows according to the sensor capacity
- Limit switches programmable for flow, density, temperature or fraction process values. Limit points can be graded as warning and alarm for values both above and below nominal process conditions
- Process noise filter for optimization of measurement performance under non-ideal application conditions. 5-stage pumping filter compensates for flow fluctuations caused by e.g. single acting piston pumps
- Full dosing controller with 5 user-configurable recipes
- Automatic zero adjustment menu, with zero point evaluation display
- Full service menu for effective and straight forward application and meter troubleshooting
- Precise temperature measurement ensures optimum accuracy on massflow, density and fraction flow.
- Fraction flow computation is based on a 5th-order algorithm matching known applications.
- Audit trail information, stores parameters changes with time stamp information
- Simulation of process values, status information and alarms
- Aerated flow filtering system, for advanced filtering of fluids with gas or air bubbles
- Datalogging of process values and parameter changes on SensorFlash

Technical specifications

Number of process variables	7
Measurement of	• Mass flow • Volume flow • Density • Process media temperature • Standard volume flow • Reference density • Fraction A flow • Fraction B flow • Fraction A % • Fraction B %
Current output	
Current	0 ... 20 mA or 4 ... 20 mA (Channel 1 only 4 ... 20 mA)
Load	Ex i: < 470 Ω (HART ≥ 230 Ω) Non-Ex: < 770 Ω (HART ≥ 230 Ω)
Time constant	0 ... 100 s adjustable
Digital output[1)]	
Pulse	41.6 µs ... 5 s pulse duration
Frequency	0 ... 12.5 kHz, 50 % duty cycle, 120 % overscale provision
Time constant	0 ... 100 s adjustable
Active	0 ... 24 V DC, 87 mA, short-circuit-protected
Passive	3 ... 30 V DC, max. 110 mA
Relay	Only for channel 3 and 4
Type	Change-over voltage-free relay contact
Load	30 V AC/100 mA
Functions	Alarm level, alarm number, limit, flow direction
Digital input[1)]	Only for channel 3 and 4
Voltage	15 ... 30 V DC (2 ... 15 mA)
Functionality	Start/stop/hold/continue dosing, reset totalizer 1 and 2, force output, freeze output
Galvanic isolation	All inputs and outputs are galvanically isolated, isolation voltage 500 V
Cut-off	
Low-flow	0 ... 9.9 % of maximum flow
Limit function	Mass flow, volume flow, fraction, density, sensor temperature
Totalizer	Three eight-digit counters for forward, net or reverse flow
Display	• Background illumination with alphanumerical text, 3 × 20 characters to indicate flow rate, totalized values, settings and faults. • Time constant as current output 1 • Reverse flow indicated by negative sign
Zero point adjustment	Via keypad or remote via digital input

© Siemens 2020

Technical specifications (continued)

Ambient temperature	
Operation	
• Transmitter	-40 ... +60 °C (-40 ... +140 °F) (humidity max. 95 %)
• Display	-20 ... +60 °C (-4 ... +140 °F)
Storage	
• Transmitter	-40 ... +70 °C (-40 ... +158 °F) (humidity max. 95 %)
• Display	-20 ... +70 °C (-4 ... +158 °F)
Communication Ch1	HART 7.5 PROFIBUS PA PROFIBUS DP Modbus RS 485 RTU
Enclosure	
Material	Aluminum, corrosion Class C4
Rating	IP67/NEMA 4X to EN/IEC 60529 (1 mH_2O for 30 min.)
Mechanical load	18 ... 1000 Hz random, 3.17 g RMS, in all directions, to IEC 68-02-36
Supply voltage	
Supply	20 ... 90 V DC ± 10 % 100 ... 240 V AC ± 10 % 47 ... 63 Hz
Fluctuation	No limit
Power consumption	11 W/30 VA
EMC performance	
Emission	EN 55011/CISPR-11 (Class A)
Immunity	EN/IEC 61236-1 (Industry)
NAMUR	Within the value limits according to "General requirements" with error criteria A in accordance with NE 21
Environment	
Environmental conditions acc. to IEC/EN/UL 61010-1	• Altitude up to 2000 m • Pollution degree 2
Maintenance	The flowmeter has a built-in error log/pending menu which should be inspected on a regular basis
Cable glands	Cable glands are available in nylon, nickel plated brass or stainless steel (316L/W1.4404) in the following dimensions: • 1 × M25, 2 × M20 • 3 × ½" NPT
Digital cable connection (remote version)	Standard industrial signal cable up to 75 m long with 2 × screened pairs or 4-wire overall screen can be laid between the sensor and transmitter. Siemens offers cables in a selection of pre-cut lengths and prepared for either gland or plug connection.
Analog cable connection (MASS 2100/FC300)	Standard industrial cable up to 15 m distance between sensor and transmitter. PVC insulated 5 × 2 × Ø 0.34 mm, twisted and screened in pairs, temperature range -20 ... +105 °C Siemens offers cables in a selection of precut lengths.

Approvals FCT030	
Hazardous area (fieldmouint housing only) [2]	• ATEX zone 1, IECEx zone 1, cCSAus (Class 1 Div 1), EAC Ex zone 1, cCSAus Zone 1, NEPSI, INMETRO (depending on version and configuration) - ATEX/IECEx Zone 1: Ex db eb ia [ia Ga] IIC T6 Gb - ATEX/IECEx Zone 21 (depending on sensor type): Ex tb [ia Da] IIIC T85°C Db - Canada: Ex db eb ia [ia Ga] IIC T6 Gb Ex tb [ia Da] IIIC T85°C (depending on sensor type) - USA: Class I, II, III, Division 1, Groups A, B, C, D, E, F, Class I Zone 1: AEx db eb ia [ia Ga] IIC T6 Gb Zone 21: AEx tb [ia Da] IIIC T85°C
Certificates	
CE mark	• Pressure equipment • Low voltage directive • WEEE • RoHS
Regional certifications	• C-TICK (Australia and New Zealand EMC) • EAC (Belarus, Armenia, Kazakhstan, Russia) • KCC (South Korea) (in preparation)

[1] With 300 Ω internal impedance. For coil switching use the passive output option.

[2] Dust certification depending on sensor type.

© Siemens 2020

Dimensional drawings

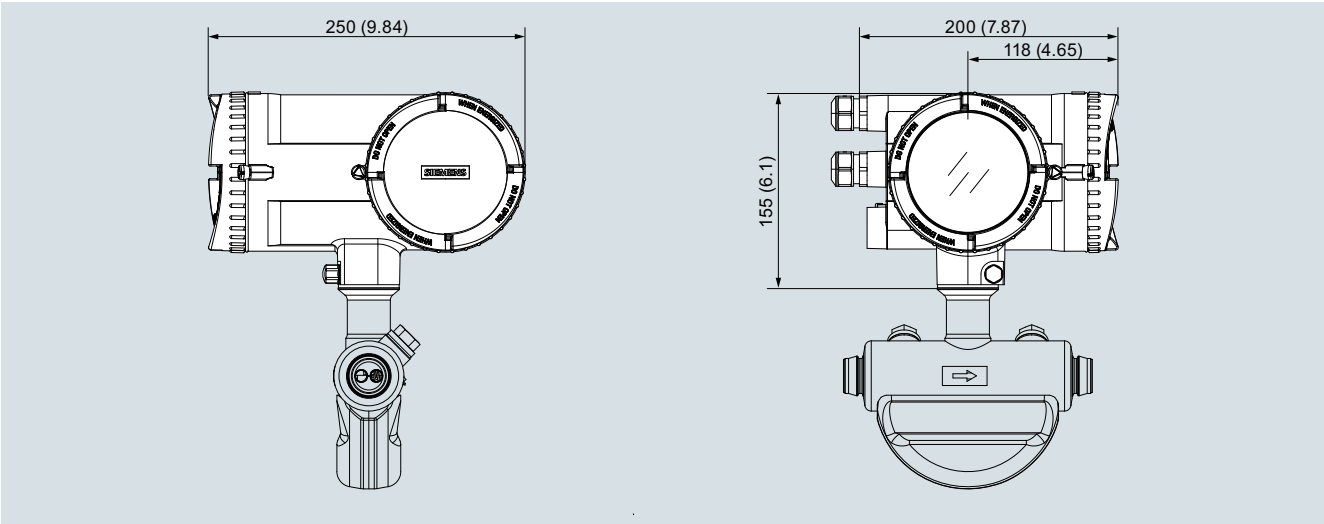

SITRANS FCT030, compact version, dimensions in mm (inch)

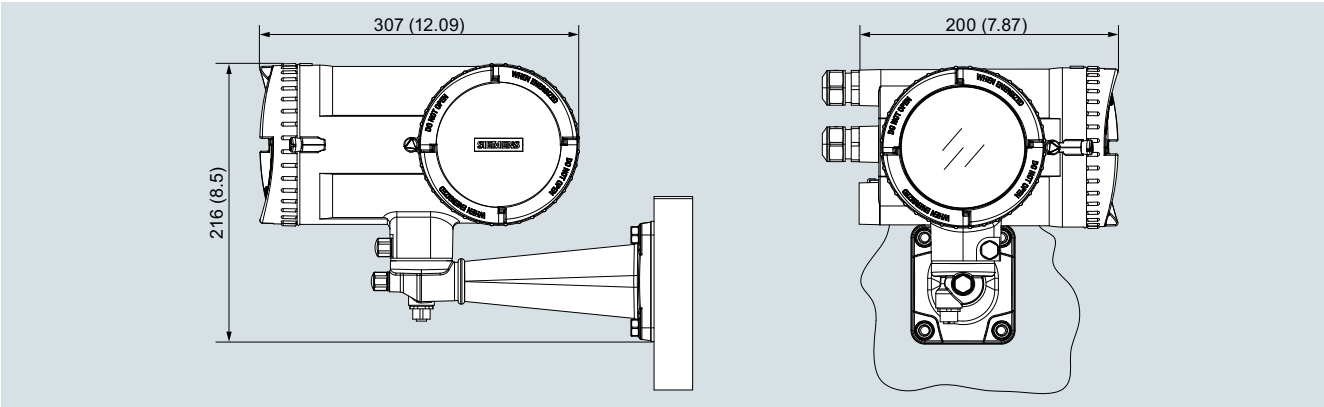

SITRANS FCT030, field mount version for sensors with digital cable and M12 plug connection, dimensions in mm (inch)

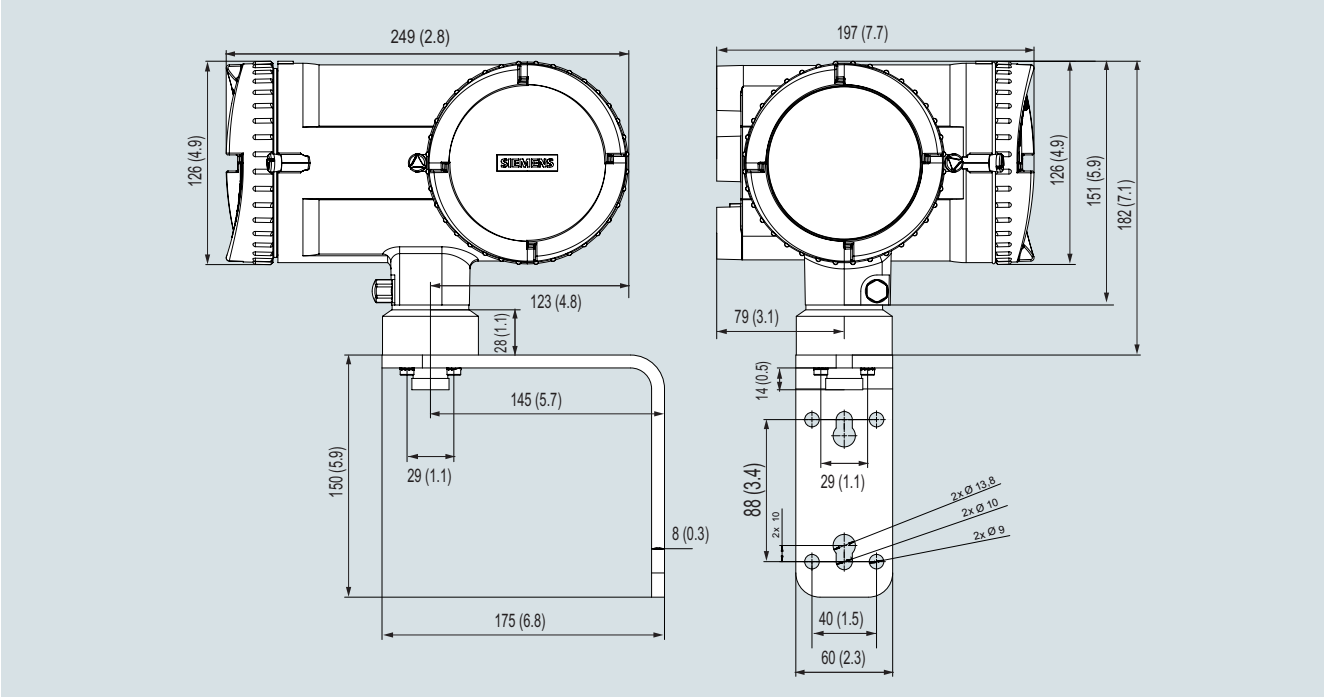

SITRANS FCT030, field mount version for low flow MASS 2100 / FC300 sensors with analog cable dimensions in mm (inch)

© Siemens 2020

Dimensional drawings (continued)

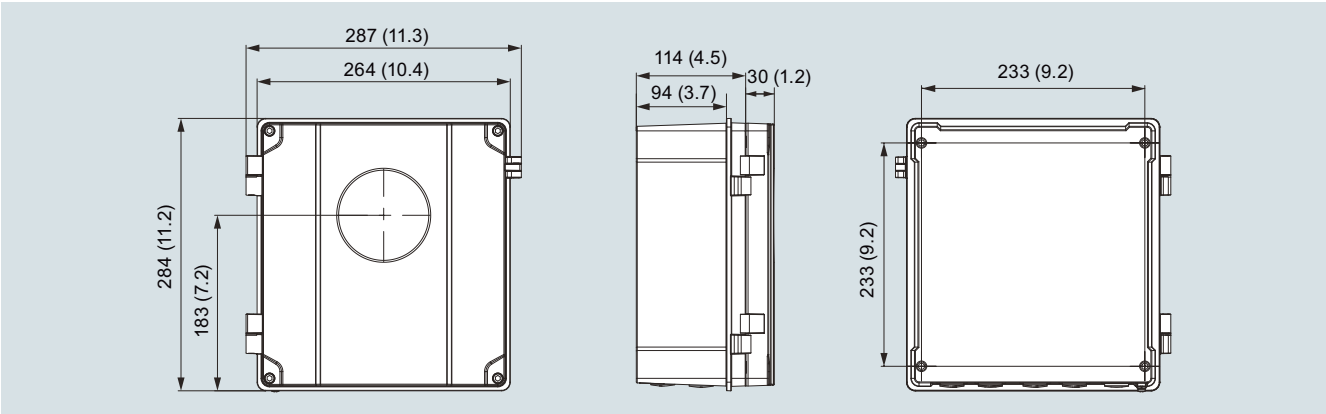

SITRANS FCT030, wall mount version, dimensions in mm (inch)

© Siemens 2020

Overview

FCT010 is based on the latest developments within digital signal processing technology – engineered for high measuring performance, fast response to step changes in flow, fast dosing applications, high immunity against process noise, easy to install commission and maintain.

The FCT010 transmitter delivers true multi-parameter measurements i.e. massflow, volumeflow, standard volumeflow, density, temperature . All with a single Modbus connection.

The FCT010 IP67 transmitter is compact mounted with all sensors of type FCS300, FCS400 , MASS 2100 DI 3, DI 6, DI 15.

For MASS 2100 DI 1.5 to DI 15 and FC300 DN 4 an analogue connection is available for a remote FCT010 solution.

Benefits

Flow calculation and measurement

Dedicated mass flow calculation with DSP technology

- Fast dosing and flow step response with maximum 10 ms response time
- 100 Hz update rate to all outputs
- Independent low flow cut-off settings for mass and volume flowrates
- Automatic zero-point adjustment on command from discrete input or host system

Operation

- User-configurable settings over SIMATIC PDM

Alarms and safety

- Advanced diagnosis and service menu enhances troubleshooting and meter validation
- Configurable upper and lower alarm and warning limits for all process values
- Alarm handling can be selected between Siemens and NAMUR standard configurations

Outputs and control

- Single channel Modbus RTU output
- Individually configurable for massflow, volumeflow, standard volumeflow, density, temperature
- One Totalizer (data not secured by power failure)

Approvals and certificates

The FCT010 coriolis flowmeter program was designed from the ground up to comply with or exceed the requirements of international standards and regulations.

Application

SITRANS FCT010 transmitters are suitable for applications within the entire process industry where there is a demand for accurate flow measurement. The meter is capable of measuring both liquid and gas flow.

Coriolis flowmeters can be applied in all industries, such as:

- Chemical & Pharma: detergents, bulk chemicals, acids, alkalis, paint mixing systems, solvents and resins, pharmaceuticals, blood products, vaccines, insulin production
- Food & Beverage: dairy products, beer, wine, soft drinks, CO2 dosing, CIP/SIP-liquids, mixture recipe control
- Automotive: fuel injection nozzle & pump testing, filling of AC units, engine consumption
- Oil & Gas applications e.g. test separators
- Hydrocarbon processing: oil refining, derivatives manufacturing, polymerisation
- Water & Waste Water: dosing of chemicals for water treatment

The Modbus communication mean that all of the process information can be read either instantaneously (10 ms update) or periodically as plant operation requires.

Design

The transmitter SITRANS FCT010 is designed in an IP67/NEMA 4X aluminum enclosure with corrosion resistant coating.

It is compact mounted with the following sensors:

- FCS300 DN 15, DN 25, DN 50, DN 80, DN 100, DN 150
- FCS400 DN 15, DN 25 and DN 50
- MASS 2100 DI 3, DI 6, DI 15

It can be remote mounted with the following sensors:

- MASS 2100 DI 1.5, DI 3, DI 6, DI 15
- FC300 DN 4

FCT010 is available with Modbus RS 485 RTU as standard.

SensorFlash

SensorFlash is a standard, 4 GByte micro SD card with the ability to be updated by PC. It is supplied with each sensor with the complete set of certification documents including calibration report. Material, pressure test, factory conformance certificates are optional at ordering.

The Siemens SensorFlash memory unit for the FCT010 only has the function of documentation including a parameter backup and a FW bundle. The Sensor Flash is not mounted into the FCT010 and will not have the extra features as the FCT030 transmitter has.

- Storing of alarm history log
- Storing of parameter change log

© Siemens 2020

Function

The following functions are available:

- Mass flowrate, volume flowrate, density, process temperature
- Single Modbus RTU I/O
- Low flow cut-off, adjustable
- Density cut-off or empty pipe cut-off, adjustable
- Flow direction adjustable
- Alarm system consisting of alarm-log, alarm pending menu
- Uni/bidirectional flow measurement
- Flowrate outputs are freely configurable between maximum negative and maximum positive flows according to the sensor capacity
- Process noise filter for optimization of measurement performance under non-ideal application conditions. 5-stage pumping filter compensates for flow fluctuations caused by e.g. single acting piston pumps
- Full service menu for effective and straight forward application and meter troubleshooting
- Aerated flow filtering system, for advanced filtering of fluids with gas or air bubbles

Technical specifications

Number of process variables	5
Measurement of	• Mass flow • Volume flow • Density • Process media temperature • Standard volume flow
I/O	Modbus RTU
Galvanic isolation	All inputs and outputs are galvanically isolated, isolation voltage 500 V
Cut-off	
Low-flow	0 ... 9.9 % of maximum flow
Limit function	Mass flow, volume flow, density, sensor temperature
Totalizer	One eight-digit counters for forward, or reverse flow - data recovery not protected at power loss.
Zero point adjustment	Via Simatic PDM
Ambient temperature	
Operation • Transmitter	-40 ... +60 °C (-40 ... +140 °F) (humidity max. 95 %)
Storage • Transmitter	-40 ... +70 °C (-40 ... +158 °F) (humidity max. 95 %)
Communication Ch1	Modbus RS 485 RTU
Enclosure	
Material	Aluminum corrosion Class C4
Rating	IP67/NEMA 4X to EN/IEC 60529 (1 mH2O for 30 min.)
Mechanical load	18 ... 1000 Hz random, 3.17 g RMS, in all directions, to IEC 68-02-36
Supply voltage	
Supply	12 ... 27 V DC Ex d: 12-24 V DC Intrisic safe: Ui: 20 V, Ii: 484 mA, Pi: 2.3 W, Li: 0.6 uH, Ci: 1.9 nF
Fluctuation	No limit
Power consumption	1.1 W
EMC performance	
Emission	EN 55011/CISPR-11 (Class A)
Immunity	EN/IEC 61236-1 (Industry)
NAMUR	Within the value limits according to "General requirements" with error criteria A in accordance with NE 21
Environment	
Environmental conditions acc. to IEC/EN/UL 61010-1	• Altitude up to 2000 m • Pollution degree 2
Maintenance	The flowmeter has a built-in error log/pending menu which should be inspected on a regular basis.
Cable glands	M12 connector Cable glands are available in nylon, nickel plated brass or stainless steel (316L/W1.4404) in the following dimensions: • 1 × M20 • 1 × ½" NPT
Digital cable connection	Standard industrial signal cable up to 75 m long with 2 × screened pairs or 4-wire overall screen can be laid between the sensor and transmitter. Siemens offers cables in a selection of pre-cut lengths and prepared for either gland or plug connection.
Analog cable connection (MASS 2100/FC300)	Standard industrial cable up to 15 m distance between sensor and transmitter. PVC insulated 5 × 2 × Ø 0.34 mm, twisted and screened in pairs, temperature range -20 ... +105 °C
Approvals	
Hazardous area	FCT010 can be installed in zone 1 for gas and zone 21 for dust (dust: depending on sensor type) and Class 1 Div 1/ Zone 1 • ATEX, IECEx, cCSAus (Class 1 Div 1), EAC Ex, cCSAus Zone 1, NEPSI Zone 1
Certificates	
CE mark	• Pressure equipment • Low voltage directive • WEEE • RoHS
Regional certifications	• C-TICK (Australia and New Zealand EMC) • EAC (Belarus, Armenia, Kazakhstan, Russia) • KCC (South Korea) (in preparation)

© Siemens 2020

Dimensional drawings

Dimension for the FCT010 remote mounted (for analogue cable connections for MASS 2100 / FC300 DN4)

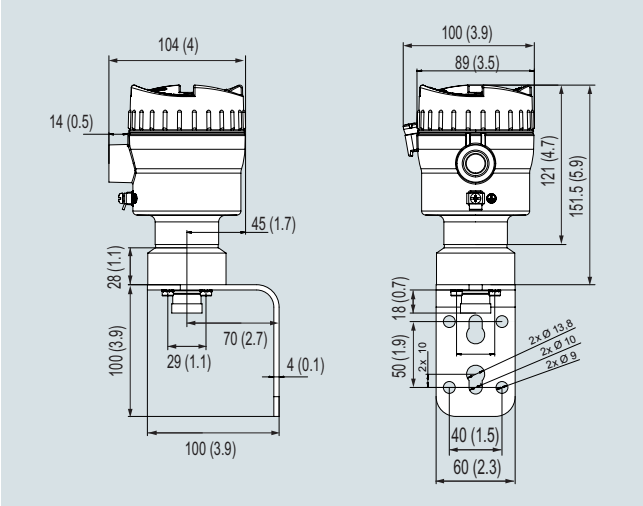

SITRANS FCT010, dimensions in mm (inch)

© Siemens 2020

SITRANS FCT070

Overview

SITRANS FCT070 transmitter

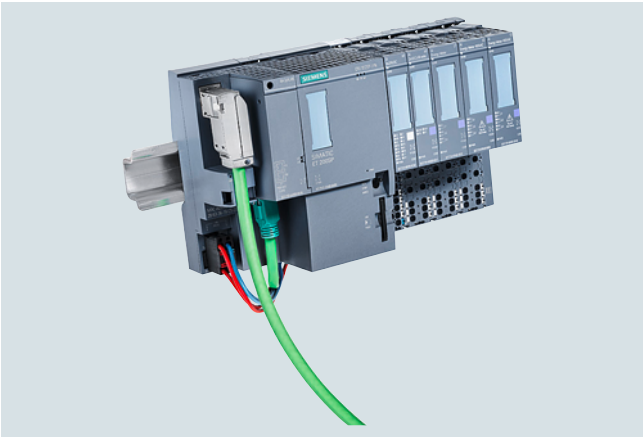

Mounting on the SIMATIC ET 200SP ST & HF

The technology module SITRANS FCT070 is a Coriolis flow meter transmitter for the SIMATIC ET 200SP ST & HF.

The TM SITRANS FCT070 flow transmitter can be operated directly in the SIMATIC PCS7 or in TIA Portal with the FCT070 Faceplates.

TM FCT070 offers real-time data processing and the display of all measuring and status data of the Coriolis flowmeter.

The TM FCT070 can work with all Siemens Coriolis flow meters. It can be directly connected to the SITRANS FCS300, SITRANS FCS400 and SITRANS FC MASS 2100 FC300 DN 4.

Benefits

- Easy integration into automation process control as TIA portal and PCS7
- Easy selection and integration of flow meters via TIA-Selector
- No transmitter between automation and flow meter required
- Cost effective integration of Coriolis flow meters for PLC controlled machines
- SITRANS FCT070 is a ET 200SP technology module and can combined with all other SIMATIC ET 200S SP ST & HF modules
- Fast and trouble-free communication between the flow meter and the PLC through digital data communication with up to 10 ms update rate
- SITRANS FCT070 and ET 200SP have the ATEX Zone 2 Class 1 Div 2 approvals. With the barrier SITRANS I300 the flowmeters sensor can be used in Ex Zone 1 & Class 1 Div 1 approval.
- Included advanced batch functionality without additional modules. I/Os are onboard
- Included the 17 standard fraction tables.

Application

SITRANS FCT070 can be used for machine builders and in the process industry plants. The meters are suitable for measuring on liquid and gas. With ET 200SP ST & HF the SITRANS FCT070 can be installed decentralized in small stations, with fast communication to the control room.

The faceplates for TIA-Portal and PCS 7 offer the direct full remote access to the flow meter.

The main industries for the SITRANS FCT070 transmitter:

- Chemical
- Food and beverage
- Pharmaceutical
- Automotive
- Oil and gas
- Power generation and utility
- Water and waste water

Design

The SITRANS FCT070 is designed as ET 200SP ST & HF module and can directly installed with other ET 200SP modules.

The sensor DSL cable is directly mounted to the ET 200SP ST & HF base unit is providing the supply voltage and the data communication. The SITRANS FC sensors with DSL can be connected directly to the SITRANS FCT070.

For sensors in ATEX Zone 1, the SITRANS I300 barrier must be installed between FCT070 and the FC DSL.

Function

The following key functionalities are available:

- Mass flow rate, volume flow rate, density, temperature and fraction flow
- Three built-in totalizers which can freely be set for counting mass flow, volume flow, standard volume flow and fraction
- Two-stage batch controller
- Two digital inputs
- Two digital outputs
- Low flow cut-off
- Zero point adjustment
- Configurable upper and lower alarm and warning limits for all process values
- Comprehensive status and error reporting

© Siemens 2020

Technical specifications

Measurement of	Mass flow, volume flow, density, temperature, fraction A flow, fraction A %, fraction B flow, fraction B %
Measurement functions	
• Totalizer 1	**Mass flow**, volume flow, standard volume flow, fraction A, fraction B
• Totalizer 2	Mass flow, **volume flow**, standard volume flow, fraction A, fraction B
• Totalizer 3	Mass flow, volume flow, **standard volume flow**, fraction A, fraction B
• Single and 2-stage batch function	Batching function with the use of one or two outputs for dosing at high and low speed
General information	
Product type designation	Technology module TM FCT070
FW update possible	Yes
Usable BaseUnits	BU 20 type B1
ET 200SP	Yes; from FW V4.2 or higher.
ET 200SP ST & HF	Compatible and tested ST: Standard HF: High Feature
Engineering with	
	• STEP 7 TIA Portal configurable/integrated as of version V16 or higher • STEP 7 configurable/integrated as of version V5.5 SP4 and higher • PCS 7 V9.0 or higher • PROFINET as of GSD version/GSD revision GSDML V2.34
Cable	
Maximum cable length to FC DSL	75 m (150 m)
Supply voltage	
Load voltage L+	24 V DC
Rated value (DC)	24 V NEC-Class II
Permissible range, lower limit (DC)	19.2 V
Permissible range, upper limit (DC)	28.8 V
Short-circuit protection	Yes
Reverse polarity protection	Yes; against destruction
Input current	
Current consumption, max.	500 mA
Power loss	
Typical power loss, max.	1.7 W
Protection class	
IP protection	IP20
EMV	
	• Electrostatic discharge according to IEC 61000-4-2: 2008 • Field-related interference according to IEC 61000-4-3: 2006 • Bursted interference due to Burst according to IEC 61000-4-4: 2012 • Conducted interference by surge according to IEC 61000-4-5: 2014 • Conducted interference by high-frequency radiation according to IEC 61000-4-6: 2013

Decentralized operation	
• to SIMATIC S7-300	Yes
• to SIMATIC S7-400	Yes
• to SIMATIC S7-1200	Yes
• to SIMATIC S7-1500	Yes
• to standard PROFINET controller	Yes
Usable with the following flowmeters	
	• SITRANS FCS400 • SITRANS FCS300 • SITRANS FC MASS2100 • SITRANS FC300 For hazardous area application the SITRANS I300 can be used as barrier/power supply between sensor and FCT070
Digital inputs 1 and 2	
Free usable inputs 1 and 2	• Start dosing • Stop dosing • Pause/resume dosing • Start/stop totalizer 1, 2 or 3 • Reset totalizer 1, 2 or 3 • Zero adjust • Force outputs • Freeze process values
High signal	• Nominal voltage: 24 V DC • Upper limit: +30 V DC • Lower limit: +11 V DC • Current: max 35 mA
Low signal	• Nominal voltage: 0 V DC • Lower limit: -30 V DC • Upper limit: +5 V DC • Current: max 35 mA
Potential separation	• Module and backplane bus • Short circuit protection
Isolation test	707 V DC
Cable length	• Max. 50 m shielded • Max. 25 m unshielded
Digital outputs 1 and 2	
Free useable outputs 1 and 2	• Alarm acknowledgment • Out of specification • Failure sensor measuring • Function check • Status force value • Flow direction
Low signal	Max. 1 V
High signal	Min 23.2 V
Switching capacity	300 mA signal high
On lamp load	8 W
Load resistance	80 … 10 kΩ
Between diffrenet circuits	Electronic/thermal
Potential seperation	Module and backplane bus
Isolation test	707 V DC
Cable length	• Max. 50 m shielded • Max. 25 m unshielded

© Siemens 2020

Technical specifications (continued)

Environment	
Ambient temperature during operation	
Minimum installation	-25 °C
horizontal installation, max.	60 °C; observe derating
vertical installation, max.	50 °C; observe derating
Ambient temperature during storage/transport	
Storage, min.	-40 °C
Storage, max.	70 °C
Transport, min.	-40 °C
Transport, max.	70 °C
Relative humidity	
Operation, min.	5 %
Operation, max.	95 %; no condensation
Height in operation	
Ambient air pressure altitude (relative to sea level)	T_{min} ... T_{max} at 1 080 hPa ... 795 hPa (-1 000 m ... +2 000 m)
EMC performance	
Emission	• EN 61000-6-4
Electromagnetic compatibilty	• IEC 61000-6-2:2016 • IEC 61000-6-4:2018
Emission of radio interference	Class A industrial environment: • IEC 61000-6-4: 2018 • IEC/CISPR 16-2-3: 2008 • EN 55016-2-3: 2006
Emission on power supply cables	Class A Industrial environment: • IEC 61000-6-4: 2018 • IEC/CISPR 16-2-1: 2010 • EN 55016-2-1: 2009
Certification	
CE mark	Low voltage directive RoHS
UL	ANSI / ISA 12.12.01
CAN/CSA	CSA C22.2 No. 213-M1987 Class I, Div. 2 Group A.B.C.D T4
ATEX	II 3 G Ex ec IIC T4 Gc
IECEx	Ex ec IIC T4 Gc
EAC	Yes
Tick	Yes
KCC	Yes
RoHS	Yes
FM	Class I, Div. 2, Group A.B.C.D T4
Communication	
Digital Sensor Link	460.8 kBits/s
Cable length FCT070 to FC DSL Sensor	75 m (150 m)
Power supply FCS sensor	The operating voltage of the sensors is supplied via the sensor cable directly from the FCT070

Selection and ordering data

Description	Article No.	
SITRANS FCT070 Transmitter for ET 200SP	**7ME4138-6AA00-0BB1**	
BU20-P12+A0+4B, PU1 BaseUnit plate for ET 200SP	**6ES7193-6BP20-0BB0** **6ES7193-6BP20-0BB1**	
SITRANS I300 – Isolating power supply – Ex barrier	**A5E39832532**	
Compatible Coriolis sensors		
SITRANS FCS300	**7ME4637-...**	
SITRANS FCS400	**7ME4617-...**	
SITRANS MASS 2100	**7ME4817-...**	
SITRANS FC300 DN4	**7ME4817-...**	

Operating instructions for SITRANS FCT070

Description	Article No.
SITRANS FCT070 system manual • English • German	**A5E47701533-AA**

Circuit diagrams

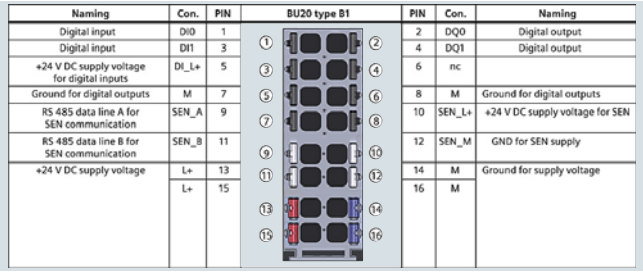

Naming	Con.	PIN	BU20 type B1	PIN	Con.	Naming
Digital input	DI0	1		2	DQ0	Digital output
Digital input	DI1	3		4	DQ1	Digital output
+24 V DC supply voltage for digital inputs	DI_L+	5		6	nc	
Ground for digital outputs	M	7		8	M	Ground for digital outputs
RS 485 data line A for SEN communication	SEN_A	9		10	SEN_L+	+24 V DC supply voltage for SEN
RS 485 data line B for SEN communication	SEN_B	11		12	SEN_M	GND for SEN supply
+24 V DC supply voltage	L+	13		14	M	Ground for supply voltage
	L+	15		16	M	

Pin assignment of the BaseUnit BU20-P12+A0+4B

© Siemens 2020

Overview

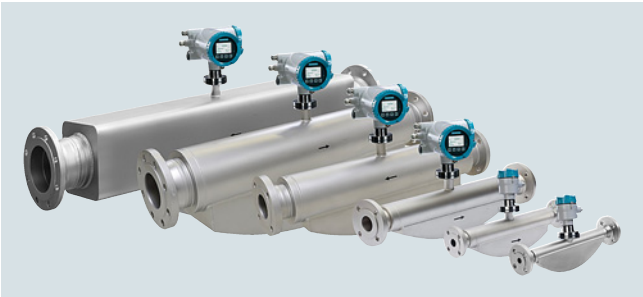

The SITRANS FCS300 sensor is available in DN 15 to DN 150 mm sizes in stainless steel AISI 316 L or nickel allow wetted material. The sensor design consists of process connections, inlet and outlet manifolds mounted in a stiff frame and two parallel tubes equally sharing the process medium flow.

The sensing tubes are curved in the CompactCurve shape which gives high sensitivity and low pressure loss. The CompactCurve shape was selected to ensure that the smallest flows are measured with optimal signal to noise ratio.

The compact sensor design with a split flow dual tube design with high driver frequency is suitable for high end applications in all industry segments e.g. Chemical, Oil & Gas , Refineries, F&B and Power.

A variety of process connections available to cover all common process connections and pressure ratings.

The sensor has a solid stainless steel fully welded enclosure to protect the measuring tubes from any harsh environments. For hazardous area applications the FCS300 comes in a number of common harzardous area approved like Atex, IECEx, cCSAus, EAC, and NEPSI.

Integration

The SITRANS FCS300 sensor is suitable for both indoor and outdoor installation and meets the requirements of Protection Class IP67/NEMA 4X. Optionally the sensor can be ordered with hazardous certification to Zone 1 and Div 1 (ATEX, IECEx, cCSAus, EAC Ex, NEPSI).

The flowmeter is bidirectional and can be installed in any orientation. The sensor is self-draining in many positions, with vertical mounting preferred.

It is important to ensure that the sensor tubes are always completely filled with homogeneous fluid; otherwise measuring errors may occur. Suitable fluids are clean liquids, pastes, light slurries or gases. Condensing vapours, aerated liquids or slush are not recommended.

The materials in contact with the process medium must be evaluated for corrosion and erosion resistances for long sensor life.

The pressure drop through the sensor is a function of the properties of the fluid and the flow rate. A pressure loss and accuracy calculator can be found on the Siemens internet site https://www.siemens.com.

The preferred flow direction is indicated by an arrow on the sensor. Flow in the direction of the arrow will be measured as positive. The flow direction can be adjusted at the transmitter to compensate for reverse installation.

Installation orientation

The optimal installation orientation is vertical with the flow upwards. This ensures that suspended solids or bubbles are completely pushed through the sensor. A drain valve below the sensor will allow the pipe and sensor to drain completely.

Supports

In order to support the weight of the flowmeter and to ensure reliable measurements when external effects exist (e.g. plant vibrations), the sensor should be installed in rigidly supported pipelines.

Supports or hangers should be installed symmetrically and stress-free in close proximity to both of the process connections.

Shut-off devices

To conduct a system zero adjustment, secure shut-off devices are required in the pipeline.

Where possible, shut-off devices should be installed both upstream and downstream of the flowmeter.

© Siemens 2020

Configuration

Installation guidelines

- The mass flowmeter does not require any flow conditioning or straight inlet pipe sections. Care should be exercised however to ensure that any upstream valves, gates, sight glasses etc. do not cavitate and are not set into vibration by the flow.
- It is always preferred to place the flowmeter upstream of any control valve or other pipeline component which may cause flashing, cavitation or vibrations.
- The presence of gas bubbles in the fluid may result in erroneous measurements, particularly in the density measurement. Therefore the flowmeter should not be installed at the lowest pressure point in the liquid piping system or where vapour can collect. Install the meter in pipeline sections with high pressure to maintain system pressure and compress any bubbles.
- Drop lines downstream from the flow sensor should be avoided to prevent the meter tube from draining during flowing conditions. A back-pressure device or orifice is recommended to ensure that flow does not separate within the flow sensor but the metering section remains at positive pressure at all times while there is flow.
- The flowmeter should not come into contact with any other objects. Avoid making attachments to the housing except for the pressure guard components (if required).
- When the connecting pipeline is larger than the sensor size, suitable standard reducers may be installed. A selection of oversize and undersize connections can be ordered - refer to the sizes tables below.
- The flow sensor may be supported at the junction between process connection and the manifold, but should not be used to support adjacent piping. Ensure that the piping is also supported on both sides so that connection stresses are neutral.
- If strong vibrations exist in the pipeline, they should be damped using elastic pipeline elements. The damping devices must be installed outside the supported flowmeter section. Direct connection of flexible elements to the sensor should be avoided.
- Make sure that any dissolved gases, which are present in many liquids, do not outgas. The back pressure at the outlet should be at least 0.2 bar (3 psi) above the vapour pressure of the process fluid.
- Assure that operation below the vapour pressure cannot occur particularly for fluids with low latent heat of vaporisation.
- The sensor should not be installed in the vicinity of strong electromagnetic fields, e.g. near motors, pumps, variable frequency drives, transformers etc.
- When operating meters on a common mounting base the sensors should be mounted and spaced separate from each other to avoid cross-talk and other vibration interferences.
- When operating meters in interconnected pipelines the pipes should be decoupled to prevent cross talk.

Remote system cabling

The system is designed so that standard instrumentation cable with four cores and overall screen or two screened pairs can be used, or cable sets can be ordered with the flowmeter. The cable can be ordered in various set lengths and terminated in the field.

Be aware of maximum sensor length cable depending on product selection, currently 75 m. Data transmission speed and process variable update rates may be affected by the cable characteristics. For best results, choose a cable with the following electrical characteristics:

Property	Unit	Value
Resistance	[Ω/km]	59
Characteristic impedance	[Ω]	100 @ 1 MHz
Insulation resistance	[MΩ/km]	200
Maximum voltage	[V]	300

The flowmeter system applies maximum 15 V DC in operation and is certified intrinsically safe. The complete system is insulation tested to 1 500 V in production.

Cabling solutions which can be ordered with the flowmeter are as follows:

1. High performance plugged cable using M12 connectors into prepared sockets
2. Cable glands for either metric or NPT threaded terminal housings
3. Plain cable in set lengths to be passed through flexible and rigid conduit (not supplied) for metric or NPT threaded terminal housings

Cable for items 1, 2 and 3 are available either gray for standard applications or light blue for Ex applications to identify the circuit as intrinsically safe.

Insulation and heating

For applications where pipeline insulation is required for personnel protection or process temperature maintenance, the SITRANS FCS300 flow sensor may also be insulated. The form and material of insulation is not prescribed and entirely depends on the practices at the application location or plant.

Insulation must not be crowded around the sensor pedestal but shaped at a 45° cone to allow the pedestal to radiate excess heat and maintain a suitable working temperature within the front-end transmitter housing.

© Siemens 2020

Technical specifications

Flow sensor FCS300		
Parameter	**Unit**	**Value**
Process media		• Fluid Group 1 (suitable for dangerous fluids) • Aggregate state: Paste/light slurry, liquid and gas
Process pressure range	[barg (psi)]	The maximum permissible operating pressure is determined by the respective process connection and the temperature of the medium 316L: 0 ... 100 (0 ... 1 450) Nickel-alloy C4 (2.4610)[3]: 0 ... 100 (0 ... 1 450)
Process temperature range	[°C (°F)]	The maximum permissible process temperature is determined by the respective process connection -50 ... +205 (-58 ... +400)
Ambient temperature range	[°C (°F)]	-40 ... +70 (-40 ... +158)
Transport temperature range	[°C (°F)]	-40 … +70 (-40 … +158)
Density range	[kg/m^3 (lb/ft^3)]	1 … 5 000 (0.062 … 312.2)
No. of process values • Primary process values • Derieved process values		• Mass flow • Density • Process medium temperature • Volume flow • Standard volume flow (with reference density) • Fraction A:B • Fraction % A:B

Performance specifications		Sensor					
Parameter	**Unit**	**DN 15**	**DN 25**	**DN 50**	**DN 80**	**DN 100**	**DN 150**
Max. zero point error		0.6 (0.0235)	2.16 (0.0792)	7.2 (0.264)	20 (0.735)	41.6 (1.628)	68.8 (2.528)
Q_{min} (1 % error)[4]	[kg/h (lb/min)]	70 (2.57)	240 (8.92)	800 (29.4)	2 000 (73.5)	4 000 (146.9)	6 900 (253.5)
Q_{nom} (1 bar pressure)	[kg/h (lb/min)]	4 500 (163.3)	20 500 (753.2)	49 000 (1 800)	122 000 (4 483)	273 000 (10 031)	459 200 (16 873)
Qmax[2]	[kg/h (lb/min)]	8 000 (293.9)	35 000 (1 286)	90 000 (3 307)	250 000 (9 186)	520 000 (19 107)	860 000 (31 600)
Linearity error mass flow • for liquids[1]	0.1% massflow sensor [%]	± 0.1	± 0.1	± 0.1	± 0.1	± 0.1	± 0.1
	0.2% massflow sensor [%]	± 0.2	± 0.2	± 0.2	± 0.2	± 0.2	± 0.2
• for gases (additional)	[%]	± 0.40	± 0.40	± 0.40	± 0.40	± 0.40	± 0.40
Repeatability mass flow	[%]	± 0.05	± 0.05	± 0.05	± 0.05	± 0.05	± 0.05
Density accuracy with 0.1%	[kg/m^3 (lb/ft^3)]	± 2 (± 0.124)	± 2 (± 0.124)	± 2 (± 0.124)	± 2 (± 0.124)	± 2 (± 0.124)	± 2 (± 0.124)
Density accuracy with 0.2 %	[kg/m^3 (lb/ft^3)]	± 10 (± 0.62)	± 10 (± 0.62)	± 10 (± 0.62)	± 10 (± 0.62)	± 10 (± 0.62)	± 10 (± 0.62)
Temperature error	[°K]	± 0.5	± 0.5	± 0.5	± 0.5	± 0.5	± 0.5

1) Increased error can be expected for gas mass flow measurement (for gas measurement typically + 0.40 % error).
2) For gas applications the max. flowrate is calculated at Mach-Number = 0.3.
3) Hastelloy C is a registered trademark of Haynes International. C4 nickel alloys are equivalent to Hastelloy C4.
4) Valid for the 0.1% sensor.

© Siemens 2020

Technical specifications (continued)

Pressure/temperature curves

With two major exceptions, the pressure rating of the flow sensors is independent of the process medium temperature. Design rules for flange connections in both the EN 1092-1 and ASME B16.5 standards dictate pressure derating with increasing temperature. The charts below show the effect of process medium temperature on the pressure ratings for the flanges within the FCS300 product program.

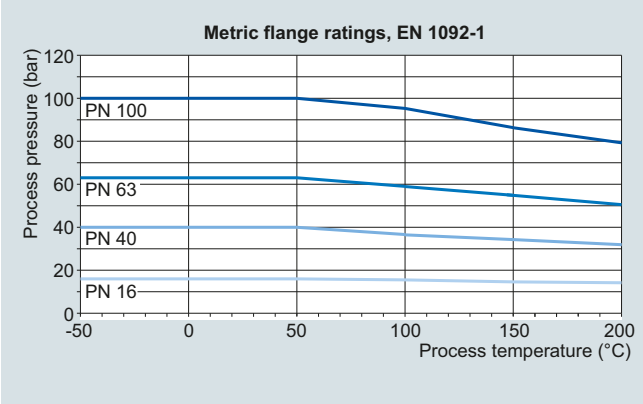

EN1092-1 flanged sensors in AISI 316L

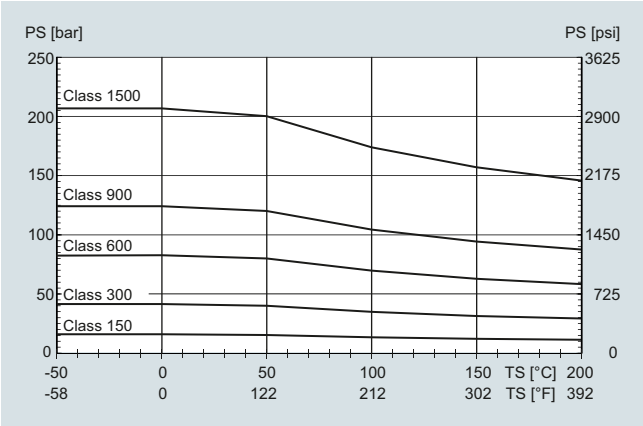

Stainless steel ASME flange 1.4571/1.4404 (AISI 316Ti/316L) up to DN200 (8")

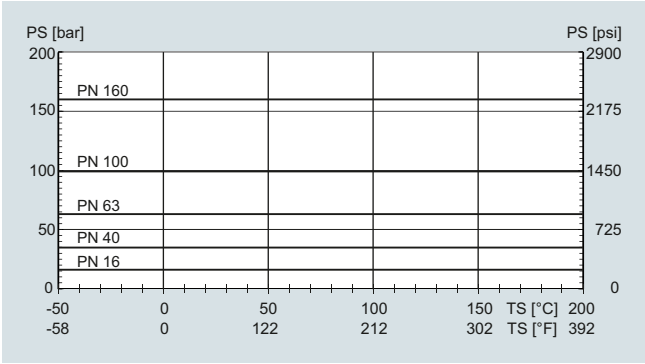

Nickel alloy DIN flange C4 (2.4610) or nickel alloy C22 (2.4602) up to DN200 (8")

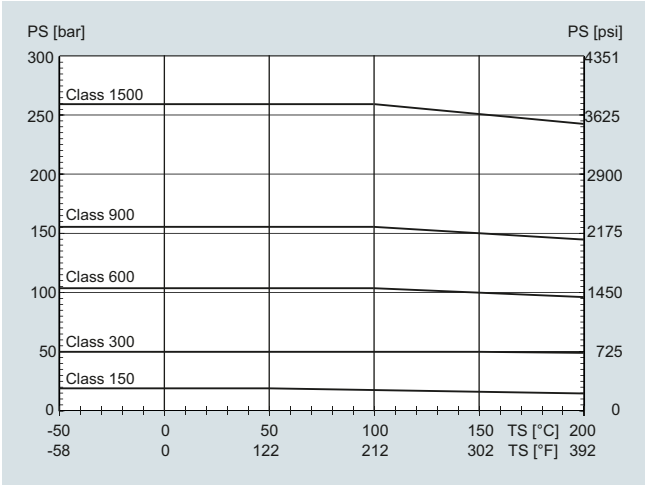

Nickel alloy ASME flange C4 (2.4610) or nickel alloy C22 (2.4602) up to DN200 (8")

Sanitary connections

Design	Nominal size	PS_{max}		TS_{max}		TS_{min}	
		[bar]	[psi]	[°C]	[°F]	[°C]	[°F]
Pipe fitting DIN 11851	DN 15 ... 40 (½ ... 1½")	40	580	140	284	-40	-40
	DN 50 ... 100 (2 ... 4")	25	363	140	284	-40	-40
Pipe fitting SMS 1145	DN 25 ... 80 (1 ... 3")	6	87	140	284	-40	-40
Clamp DIN 32676	DN 15 ... 50 (½ ... 2")	16	232	120	248	-40	-40
	DN 65 ... 100 (2½ ... 4")	10	145	120	248	-40	-40

© Siemens 2020

Technical specifications (continued)

Sensor variants

SITRANS FCS300 sensors are available in a wide range of process connections. The available combinations of type, sensor size and connection size are shown in the tables below.

Standard variants

Sensor	Connection	EN 1092-1 B1, PN 16	EN 1092-1 B1, PN 40	EN 1092-1 B2, PN 63	EN 1092-1 B2, PN 100	EN 1092-1 D, PN 40	ANSI B16.5-2009, class 150	ANSI B16.5-2009, class 300	ANSI B16.5-2009, class 600	ANSI B16.5-2009, class 900	ANSI B16.5-2009, class 1500	ISO 228-1 G female pipe thread	ASME B1.20.1 NPT female pipe thread	DIN 11851 hygienic screwed	DIN 32676 clamp (ISO) Row A	SMS 1145 hygienic screwed	JIS B2220:2004/10K	JIS B2220:2004/20K	EN 1092-1 PN 16, NAMUR length	EN 1092-1 PN 40, NAMUR length
Standard: 7ME463.-...																				
DN 15 (½")	DN 10 (3/8")		●									●		●	●		●	●		
	DN 15 (½")		●	●	●	●	●	●	●	●[1]	●[1]	●	●	●	●		●	●		●
	DN 20 (¾")		●				●							●	●		●	●		
DN 25 (1")	DN 20 (¾")		●				●							●	●		●	●		
	DN 25 (1")		●	●	●	●	●	●	●	●[1]	●[1]			●	●	●	●	●		●
	DN 40 (1½")		●	●	●		●	●	●					●	●	●	●	●		
DN 50 (2")	DN 40 (1½")		●	●	●		●	●	●	●	●			●	●	●	●	●		
	DN 50 (2")		●	●	●	●	●	●	●	●[1]	●[1]			●	●	●	●	●		●
	DN 65 (2½")		●	●			●		●	●[1]	●[1]			●	●	●	●	●		
DN 80 (3")	DN 65 (2½")		●	●	●		●	●	●	●[1]	●[1]			●	●	●	●	●		
	DN 80 (3")		●	●	●	●	●	●	●	●[1]	●[1]			●	●	●	●	●		●
	DN 100 (4")	●	●	●	●		●	●	●	●[1]	●[1]			●	●		●	●		
DN 100 (4")	DN 80 (3")	●	●	●	●		●		●	●[1]	●[1]						●	●		
	DN 100 (4")	●	●	●	●		●	●	●	●[1]	●[1]						●	●	●	
	DN 150 (6")	●	●	●	●		●	●	●	●[1]	●[1]						●	●		
DN 150 (6")	DN 100 (4")	●	●	●	●		●		●	●[1]	●[1]							●		
	DN 150 (6")	●	●	●	●		●	●	●	●[1]	●[1]							●	●	
	DN 200 (8")	●	●	●	●		●	●	●	●[1]	●[1]							●		

[1] Apply class 600 p and t ratings for class 900 and class 1500 flanges.

Hygienic sensor variants

The hygienic sensors will have to be ordered with stainless steel tubes 316L/1.4435/1.4404 (polished). Hygienic sensors are offered with process connection conforming to various international quick-connect clamps or threaded connectors. Pressure ratings are according to the relevant standard and the sensor size.

NAMUR sensor variants

The NAMUR variants have built-in lengths according to NAMUR recommendation NE 132. The recommendations of NE 132 are stated for sensors with flanges the same size as the sensor nominal size, and for flanges to EN 1092-1 PN 40 with B1 flange facing. For DN 100 and DN 150 flanges to PN 16.

© Siemens 2020

Dimensional drawings

Sensor dimensions

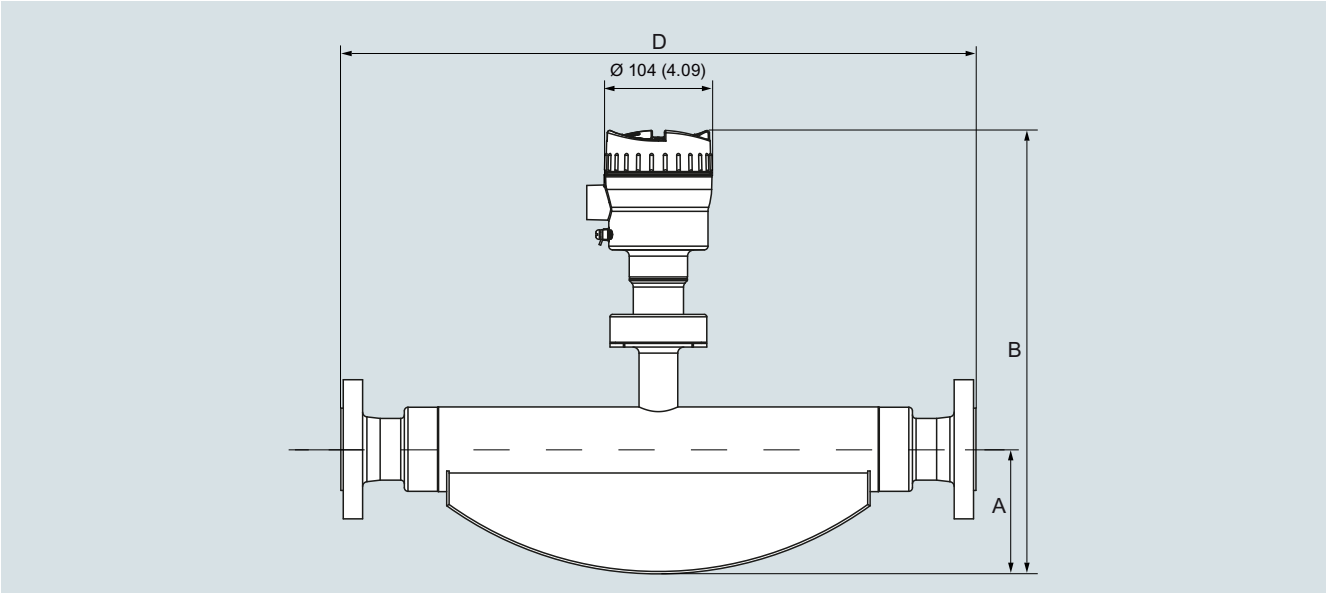

SITRANS FCS300 remote sensor

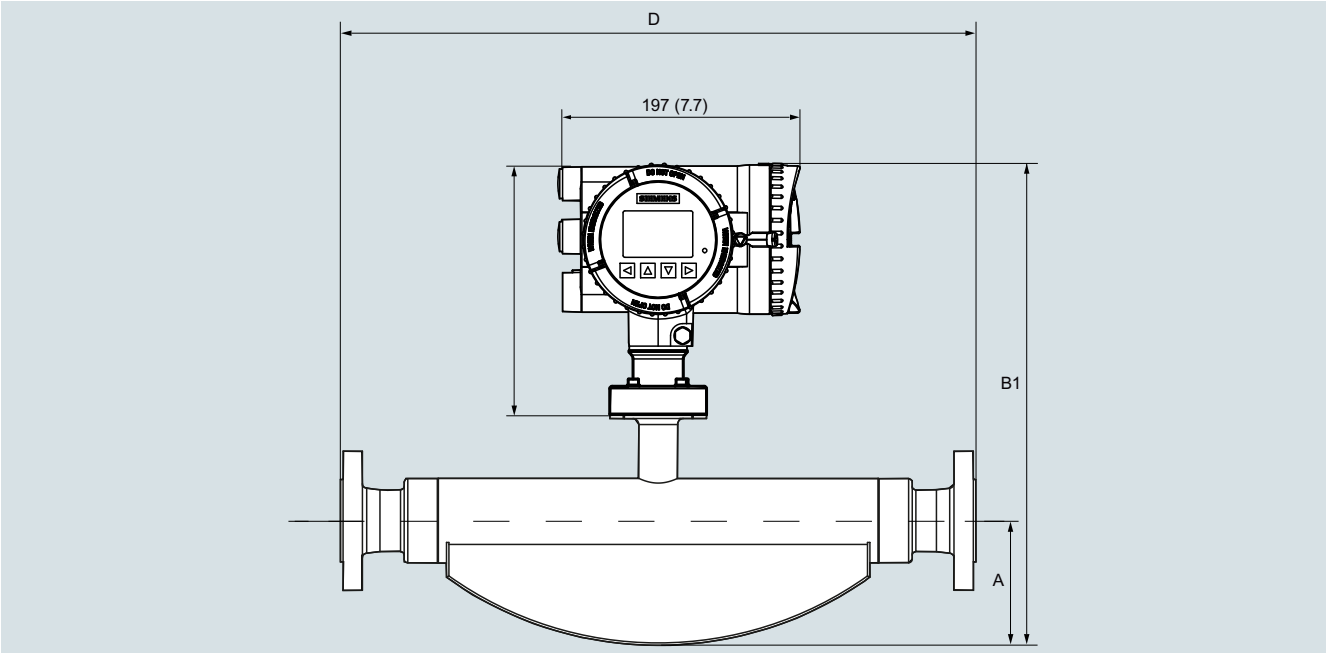

SITRANS FCS300 compact

Sensor		A		B		B1		Weight[1]	
[DN]	[inch]	[mm]	[inch]	[mm]	[inch]	[mm]	[inch]	[kg]	[lb]
15	½	80	3.15	358	14.09	387	15.19	4.6	10.1
25	1	103	4.06	398	15.67	427	16.77	7.9	17.4
50	2	126	4.96	435	17.13	464	18.23	25.7	56.7
80	3	181	7.13	525	20.67	554	21.77	66.5	147
100	4	262	10.31	622	24.49	651	25.59	128	282
150	6	317	12.48	714	28.11	743	29.21	207	456

[1] For FCT030 compact add 4 kg (8.8 lb)

SITRANS FCS300, dimensions in mm (inch), weights in kg (lb), for a EN 1092 PN 40 flanged version.

The built-in length D depends on the flange.

© Siemens 2020

Dimensional drawings (continued)

Overall length

The overall length (built-in length (D)) of each sensor depends on the connection standard and the pressure rating.
The tables below summarize the dimensions available at the time of publishing. Please contact Siemens for further information about our desired process connection specification.

Sensor in AISI 316L: 7ME463.-...

Sensor AISI 316L	**DN 15 (½")**			**DN 25 (1")**			**DN 50 (2")**		
Connection	**DN 10 (3/8")**	**DN 15 (½")**	**DN 20 (¾")**	**DN 20 (¾")**	**DN 25 (1")**	**DN 40 (1½")**	**DN 40 (1½")**	**DN 50 (2")**	**DN 65 (2½")**
EN 1092-1 B1, PN 16									
EN 1092-1 B1, PN 40	385	385	421	576	525	576	763	715	763
EN 1092-1 B2, PN 63		403			564	572	745	745	
EN 1092-1 B2, PN 100		403			564	576	745	745	
EN 1092-1 D, PN 40		385			525			715	
ASME B16.5, class 150		435	421	575	575	576	763	715	756
ASME B16.5, class 300		421			576	576	756	763	
ASME B16.5, class 600		421			576		756	773	
ASME B16.5, class 900		421			576		780	790	800
ASME B16.5, class 1500		421					780	790	800
ISO 228-1 G female pipe thread		450							
ASME B1.20.1 NPT female pipe thread		450							
DIN 11851 hygienic screwed	413	413	413	590	590	590	763	740	740
DIN 32676 Row A hygienic clamp	413	413	413	590	590	590	763	740	740
SMS 1145 hygienic screwed					590	590	763	740	740
JIS B2220/10K	385	385	421	576	525	576	763	715	763
JIS B2220/20K	385	385	421	576	525	576	763	715	763
EN 1092-1 PN 16, NAMUR length									
EN 1092-1 PN 40, NAMUR length		510			600			715	

Sensor	**DN 80 (3")**			**DN 100 (4")**			**DN 150 (6")**		
Connection	**DN 65 (2½")**	**DN 80 (3")**	**DN 100 (4")**	**DN 80 (3")**	**DN 100 (4")**	**DN 150 (6")**	**DN 100 (4")**	**DN 150 (6")**	**DN 200 (8")**
EN 1092-1 B1, PN 16			875	1222	1122	1260	1569	1421	1587
EN 1092-1 B1, PN 40	910	870	875	1222	1144	1260	1599	1461	1650
EN 1092-1 B2, PN 63	910	910	1060	1234	1304				
EN 1092-1 B2, PN 100	910	910	1080	1234	1334				
EN 1092-1 D, PN 40		870							
ASME B16.5, class 150		880	880	1244	1144	1330	1630	1485	1650
ASME B16.5, class 300	920	895	1075	1244	1324	1350		1505	1670
ASME B16.5, class 600	920	920	1100	1244	1354	1400	1675	1555	
ASME B16.5, class 900	965	1100	1130	1470	1380	1450	1705	1605	
ASME B16.5, class 1500	965	1300	1150	1500	1400	1510	1725	1665	
ISO 228-1 G female pipe thread									
ASME B1.20.1 NPT female pipe thread									
DIN 11851 hygienic screwed	990	940	940						
DIN 32676 (ISO) Row A hygienic clamp	950	910	910						
SMS 1145 hygienic screwed	990	940							
JIS B2220/10K	910	870		1275	1150	1300			
JIS B2220/20K	910	870		1275	1150	1308			
EN 1092-1 PN 16, NAMUR length					1400			1700	
EN 1092-1 PN 40, NAMUR length		915							

SITRANS FCS300, overall length (D), dimensions in mm

© Siemens 2020

Dimensional drawings (continued)

Sensor	**DN 15 (½")**			**DN 25 (1")**			**DN 50 (2")**		
Connection	**DN 10 (3/8")**	**DN 15 (½")**	**DN 20 (¾")**	**DN 20 (¾")**	**DN 25 (1")**	**DN 40 (1½")**	**DN 40 (1½")**	**DN 50 (2")**	**DN 65 (2½")**
EN 1092-1 B1, PN 16									
EN 1092-1 B1, PN 40	15.16	15.16	16.57	22.68	20.67	22.68	30.04	28.15	30.04
EN 1092-1 B2, PN 63		15.87			22.20	22.52	29.33	29.33	
EN 1092-1 B2, PN 100		15.87			22.20	22.68	29.33	29.33	
EN 1092-1 D, PN 40		15.16			20.67			28.15	
ASME B16.5, class 150		17.13	16.57	22.64	22.64	22.68	30.04	28.15	29.76
ASME B16.5, class 300		16.57			22.68	22.68	29.76	30.04	
ASME B16.5, class 600		16.57			22.68	22.68	29.76	30.43	
ASME B16.5, class 900		16.57			22.68		30.71	31.10	31.50
ASME B16.5, class 1500		16.57			22.68		30.71	31.10	31.50
ISO 228-1 G female pipe thread		17.72							
ASME B1.20.1 NPT female pipe thread		17.72							
DIN 11851 hygienic screwed	16.26	16.26	16.26	23.23	23.23	23.23	30.04	29.13	29.13
DIN 32676 (ISO) Row A hygienic clamp	16.26	16.26	16.26	23.23	23.23	23.23	30.04	29.13	29.13
SMS 1145 hygienic screwed					23.23	23.23	30.04	29.13	29.13
JIS B2220/10K	15.16	15.16	16.57	22.68	20.67	22.68	30.04	28.15	30.04
JIS B2220/20K	15.16	15.16	16.57	22.68	20.67	22.68	30.04	28.15	30.04
EN 1092-1 PN 16, NAMUR length									
EN 1092-1 PN 40, NAMUR length		20.08			23.62			28.15	

Sensor	**DN 80 (3")**			**DN 100 (4")**			**DN 150 (6")**		
Connection	**DN 65 (2½")**	**DN 80 (3")**	**DN 100 (4")**	**DN 80 (3")**	**DN 100 (4")**	**DN 150 (6")**	**DN 100 (4")**	**DN 150 (6")**	**DN 200 (8")**
EN 1092-1 B1, PN 16			34.45	48.11	44.17	49.61	61.77	55.94	62.48
EN 1092-1 B1, PN 40	35.83	34.25	34.45	48.11	45.04	49.61	62.95	57.52	64.96
EN 1092-1 B2, PN 63	35.83	35.83	41.73	48.58	51.34				
EN 1092-1 B2, PN 100	35.83	35.83	42.52	48.58	52.52				
EN1092-1 D, PN 40		34.25							
ASME B16.5, class 150		34.65	34.65	48.98	45.04	52.36	64.17	58.46	64.96
ASME B16.5, class 300	36.22	35.24	42.32	48.98	52.13	55.12		59.25	65.75
ASME B16.5, class 600	36.22	36.22	43.31	48.98	53.31	57.14	65.94	61.22	
ASME B16.5, class 900	37.99	43.31	44.49	57.87	54.33	57.09	67.13	63.19	
ASME B16.5, class 1500	37.99	51.18	45.28	59.06	55.12	59.45	67.91	65.55	
ISO 228-1 G female pipe thread									
ASME B1.20.1 NPT female pipe thread									
DIN 11851 hygienic screwed	38.98	37.01	37.01						
DIN 32676 (ISO) Row A hygienic clamp	37.40	35.83	35.83						
SMS 1145 hygienic screwed	38.98	37.01							
JIS B2220/10K	35.83	34.25		50.20	45.28	50.20			
JIS B2220/20K	35.83	34.25		50.20	45.28	51.50			
EN 1092-1 PN 16, NAMUR length					55.12			66.93	
EN 1092-1 PN 40, NAMUR length		36.02							

SITRANS FCS300, overall length (D), dimensions in inch

© Siemens 2020

Dimensional drawings (continued)

Sensor in nickel-alloy C4: 7ME463.-...

Sensor nickel-alloy C4	**DN 15 (½")**			**DN 25 (1")**			**DN 50 (2")**		
Connection	**DN 10 (3/8")**	**DN 15 (½")**	**DN 20 (¾")**	**DN 20 (¾")**	**DN 25 (1")**	**DN 40 (1½")**	**DN 40 (1½")**	**DN 50 (2")**	**DN 65 (2½")**
EN 1092-1 B1, PN 40	449	442	428	646	614	576	814	764	819
EN 1092-1 B2, PN 63	449	442	428	646	614	576	814	764	819
EN 1092-1 B2, PN 100	449	442	428	646	614	576	814	764	819
ANSI B16.5, class 150		442	428	646	614	576	814	764	819
ANSI B16.5, class 300		442	428	646	614	576	814	764	819
ANSI B16.5, class 600		442	428	646	614	576	814	764	819
JIS B2220/10K		442	428	646	614	576	814	764	819

Sensor	**DN 80 (3")**			**DN 100 (4")**			**DN 150 (6")**		
Connection	**DN 65 (2½")**	**DN 80 (3")**	**DN 100 (4")**	**DN 80 (3")**	**DN 100 (4")**	**DN 150 (6")**	**DN 100 (4")**	**DN 150 (6")**	**DN 200 (8")**
EN 1092-1 B1, PN 16			971	1357	1280	1261	1592	1502	
EN 1092-1 B1, PN 40	1021	971	971	1357	1280	1261	1592	1502	
EN 1092-1 B2, PN 63	1021		971	1357	1280	1261	1632	1542	
EN 1092-1 B2, PN 100	1021	971	971	1357	1280	1261	1632	1542	
ANSI B16.5, class 150	1021	971	971	1357	1280	1261	1592	1502	
ANSI B16.5, class 300	1021	971	971	1357	1280	1261	1632	1542	
ANSI B16.5, class 600	1021	971	971	1357	1280	1261	1632	1542	
JIS B2220/10K	1021	971	971	1357	1280	1261	1592	1502	

SITRANS FCS300, overall length (D), dimensions in mm

Sensor	**DN 15 (½")**			**DN 25 (1")**			**DN 50 (2")**		
Connection	**DN 10 (3/8")**	**DN 15 (½")**	**DN 20 (¾")**	**DN 20 (¾")**	**DN 25 (1")**	**DN 40 (1½")**	**DN 40 (1½")**	**DN 50 (2")**	**DN 65 (2½")**
EN 1092-1 B1, PN 40	17.7	17.4	16.9	25.4	24.2	22.7	32.0	30.1	32.2
EN 1092-1 B2, PN 63	17.7	17.4	16.9	25.4	24.2	22.7	32.0	30.1	32.2
EN 1092-1 B2, PN 100	17.7	17.4	16.9	25.4	24.2	22.7	32.0	30.1	32.2
ANSI B16.5, class 150		17.4	16.9	25.4	24.2	22.7	32.0	30.1	31.2
ANSI B16.5, class 300		17.4	16.9	25.4	24.2	22.7	32.0	30.1	31.2
ANSI B16.5, class 600		17.4	16.9	25.4	24.2	22.7	32.0	30.1	31.2
JIS B2220/10K		17.4	16.9	25.4	24.2	22.7	32.0	30.1	32.2

Sensor	**DN 80 (3")**			**DN 100 (4")**			**DN 150 (6")**		
Connection	**DN 65 (2½")**	**DN 80 (3")**	**DN 100 (4")**	**DN 80 (3")**	**DN 100 (4")**	**DN 150 (6")**	**DN 100 (4")**	**DN 150 (6")**	**DN 200 (8")**
EN 1092-1 B1, PN 16			38.2	53.4	50.4	49.6	62.7	59.1	
EN 1092-1 B1, PN 40	40.2	38.2	38.2	53.4	50.4	49.6	62.7	59.1	
EN 1092-1 B2, PN 63	40.2		38.2	53.4	50.4	49.6	64.3	60.7	
EN 1092-1 B2, PN 100	40.2	38.2	38.2	53.4	50.4	49.6	64.3	60.7	
ANSI B16.5, class 150	40.2	38.2	38.2	53.4	50.4	49.6	62.7	59.1	
ANSI B16.5, class 300	40.2	38.2	38.2	53.4	50.4	49.6	64.3	60.7	
ANSI B16.5, class 600	40.2	38.2	38.2	53.4	50.4	49.6	64.3	60.7	
JIS B2220/10K	35.83	34.25	41.73	53.4	50.4	49.6	62.7	59.1	

SITRANS FCS300, overall length (D), dimensions in inch

© Siemens 2020

SITRANS FC330 flowmeter system

Overview

The complete flowmeter system SITRANS FC330 can be ordered for standard, hygienic or NAMUR service. The flowmeter is based on the latest developments within digital signal processing technology – engineered for high measuring performance:

- Fast response to rapid changes in flow
- Fast dosing applications
- High immunity against process noise
- High turndown ratio of flowrates
- Suitable for liquid and gas service
- Easy to install, commission and maintain

With all global marine approvals the FC330 is ideal for integration in ship fuel efficiency and environmental measurement systems as well as bunkering solutions.
FC330 is available with current output HART 7.5, Modbus RS 485 RTU, PROFIBUS DP or PROFIBUS PA as standard on Channel 1. Additional functions can be freely configured for analog, pulse, frequency, relay or status output or binary input.

The transmitter comes with a user-configurable graphical display and SensorFlash, a micro SD card for configuration backup, firmware update and data storage.

The SITRANS FC330 flowmeter system consists of a SITRANS FCS300 sensor and a SITRANS FCT030 transmitter.

Benefits

- It is compact and light, fitting neatly into dense piping arrangements
- Easy maintenance because modules can be exchanged rapidly
- Effective separation of measurement from plant vibration
- Highly secure operation in safety critical applications
- Non-volatile memory of all setup and operation data
- Reliable measurements due to high signal to noise ratio
- Secure, digital transfer of measurement data from the sensor
- Short overall length; easy drop-in replacement into most existing installations

© Siemens 2020

Technical specifications

Sizes	DN 15 (½") DN 25 (1") DN 50 (2") DN 80 (3") DN 100 (4") DN 150 (6")
Accuracy	± 0.10 % or 0.20 % for liquids additional ±0.40 for gases
Repeatability	± 0.05 %
Flow range (liquids)	
(water @ 1 bar pressure loss) (Q_{nom})	
• DN 15	4 500 kg/h (163.3 lb/min)
• DN 25	20 500 kg/h (753.2 lb/min)
• DN 50	49 000 kg/h (1 800 lb/min)
• DN 80	122 000 kg/h (4 483 lb/min)
• DN 100	273 000 kg (10 031 lb/min)
• DN 150	459 200 kg/h (16 873 lb/min)
Architecture	Compact or remote configuration
Display	Full graphical display, 240 × 160 pixels with selection of 6 languages
Power supply	20 ... 90 V DC ± 10 %; 100 ... 240 V AC ± 10 %, 47 ... 63 Hz ± 10 %
Material	
• Sensor	
- Wetted parts	316L stainless steel or nickel alloy C4
- Enclosure	304 stainless steel
• Transmitter	Aluminum with corrosion-resistant coating class C4
Enclosure rating	IP67[1)]
Pressure ratings	
• Measuring tubes	
- 316L	100 bar (1 450 psi)
- Nickel alloy C4	100 bar (1 450 psi)
• Sensor enclosure	No pressure containment
Temperature ratings	
• Process medium	-50 ... +205 °C (-58 ... +400 °F)
• Ambient	-40 ... +60 °C (-40 ... +140 °F)[1)]
• Display	-20 ... +60 °C (-4 ... +140 °F)

Process connections	
• Flanges	EN 1092-1 B1, EN 1092-1 B2, EN 1092-1 D, ANSI/ASME B16.5, JIS B 2220
• Pipe threads	ASME B1.20 (NPT) female pipe thread, ISO 228-1 G female pipe thread (BSPP)
• Hygienic threads	DIN 11851, SMS 1145
• Hygienic clamps	DIN 32676 (ISO) Row A
Approvals	
• Hazardous area (zone 1)	ATEX, IECEx, EAC Ex, CSA, cCSAus, NEPSI, EAC No dust approval
• Pressure equipment	PED, CRN
• Hygienic	EHEDG (DN 25 ... DN 80) (in preparation)
• Marine (in preparation for FC330 compact)	Germanischer Lloyd/det Norske Veritas, Bureau Veritas, Lloyds of London, American Bureau of Shipping, RINA (Italy)
NAMUR	NAMUR-compliant (e.g. NE 21, NE 41, NE 107 and NE 132)
I/O	Up to 4 channels combining analog, relay or digital outputs and binary input
Communication	HART PROFIBUS PA PROFIBUS DP Modbus RTU (RS 485)
EMC performance	
Emission	EN 55011/CISPR-11 (Class A)
Immunity	EN/IEC 61326-1 (Industry)
Mechanical load	18 ... 400 Hz random The flow meter will mechanically tolerate 3.17 g RMS in all directions. Flow accuracy cannot be guaranteed under all conditions.

1) If operating outdoors, avoid direct sunlight, paritcularly in warm climatic regions.

© Siemens 2020

Selection and ordering data

SITRANS FC330 digital coriolis flowmeter with SITRANS FCS300 standard flow sensor compact or remote mounting with FCT030 transmitter ↗	Article No. 7ME4633-	Ord. code
↗ Click on the Article No. for the online configuration in the PIA Life Cycle Portal.	■■■■■-■■■■	■■■
Sensor size, connector size		
DN 15, DN 10 (½", 3/8")	3 F	
DN 15, DN 15 (½", ½")	3 G	
DN 15, DN 20 (½", ¾")	3 H	
DN 25, DN 20 (1", ¾")	3 K	
DN 25, DN 25 (1", 1")	3 L	
DN 25, DN 40 (1", 1½")	3 N	
DN 50, DN 40 (2", 1½")	4 B	
DN 50, DN 50 (2", 2")	4 C	
DN 50, DN 65 (2", 2½")	4 D	
DN 80, DN 65 (3", 2½")	4 J	
DN 80, DN 80 (3", 3")	4 K	
DN 80, DN 100 (3", 4")	4 L	
DN 100, DN 80 (4", 3")	5 M	
DN 100, DN 100 (4", 4")	5 N	
DN 100, DN 150 (4", 6")	5 Q	
DN 150, DN 100 (6", 4")	6 D	
DN 150, DN 150 (6", 6")	6 F	
DN 150, DN 200 (6", 8")	6 H	
Process connection		
EN 1092-1 B1, PN 16	A 0	
EN 1092-1 B1, PN 40	A 1	
EN 1092-1 B2, PN 63	A 2	
EN 1092-1 B2, PN 100	A 3	
EN 1092-1 D, PN 40	A 5	
ASME B16.5 RF, lass 150	D 1	
ASME B16.5 RF, Class 300	D 2	
ASME B16.5 RF, Class 600	D 3	
ASME B16.5 RF, Class 900 (p- and t-rating as Class 600)	D 4	
ASME B16.5 RF, Class 1500 (p- and t-rating as Class 600)	D 5	
ISO 228-1G female pipe thread	E 1	
ASME B1.20.1 NPT female pipe thread	E 3	
DIN 11851 hygienic screwed	F 1	
DIN 32676 hygenic clamp (ISO) Row A	G 2	
SMS 1145 hygienic screwed	K 1	
JIS B2220/10K	L 2	
JIS B2220/20K	L 4	
EN 1092-1, PN 16, NAMUR length	N 1	
EN 1092-1, PN 40, NAMUR length	N 2	
Wetted parts material		
AISI 316L/1.4435/1.4404	1	
AISI 316L/1.4435/1.4404 (polished)	2	
Nickel alloy C4	3	

SITRANS FC330 digital coriolis flowmeter with SITRANS FCS300 standard flow sensor compact or remote mounting with FCT030 transmitter	Article No. 7ME4633-	Ord. code
	■■■■■-■■■■	■■■
Calibration/Accuracy class		
0.2 % flow, 10 kg/m³ density	0	
0.1 % flow, 2 kg/m³ density	1	
0.1 % Standard fraction (with density 2 kg/m³)	8	
0.1 % Customer selected fraction	9	N 0 Y
Mounting style, transmitter housing and material		
None (replacement sensor)	A	
Compact, IP67 fieldmount, aluminum	D	
Remote, IP67 fieldmount, aluminum, M12	G	
Remote, IP67 fieldmount, aluminum, T/Box	K	
Remote, IP67, wall mount, aluminium (in preparation)	U	
Ex approval (depending on variant)		
Non-Ex	A	
ATEX (zone 1)	C	
IECEx (zone 1)	F	
US (cCSAus), Div 1	L	
Canada (cCSAus), zone 1	M	
NEPSI	N	
INMETRO (in preparation)	P	
KCC (in preparation)	Q	
EAC	U	
Local User Interface		
None (replacement sensor, DSL only)	0	
Blind	1	
Graphical, 240 × 160 pxl	3	

Selection and ordering data

	Order code
Further designs Please add "**-Z**" to Article No. and specify Order code(s).	
Cable glands	
None (replacement sensor)	A00
Metric, no glands	A01
Metric, nylon, limited to -20 °C/-4 °F	A02
Metric, brass/Ni plated	A05
Metric, stainless steel	A06
NPT, no glands	A11
NPT, nylon, limited to -20 °C/-4 °F	A12
NPT, brass/Ni plated	A15
NPT, stainless steel	A16
Metric thread with M12 socket fitted	A20
Sofware functions and CT approvals	
None (replacement sensor)	B10
Standard	B11

© Siemens 2020

Selection and ordering data

	Order code
Further designs	
Please add "**-Z**" to Article No. and specify Order code(s).	
I/O configuration Ch1	
No output channel	**E00**
4 ... 20 mA HART Active/Passive (non-Ex)	**E02**
Ca 4 ... 20 mA HART active (Ex)	**E06**
Ca 4 ... 20 mA HART passive (Ex)	**E07**
PROFIBUS PA	**E10**
PROFIBUS DP (non-Ex)	**E11**
Modbus RTU RS 485	**E14**
I/O configuration Ch2, Ch3 and Ch4	
None	**F00**
• Non Ex: Sig O, None, None	**F01**
• Non Ex: Sig O, Sig I/O, None	**F02**
• Non Ex: Sig O, Sig I/O, Sig I/O	**F03**
• Non Ex: Sig O, Sig I/O, R	**F04**
• Non Ex: Sig O, R, R	**F05**
• Non Ex: Sig O, R, None	**F06**
• Ex: pSig O, None, None	**F11**
• Ex: pSig O, pSig I/O, None	**F12**
• Ex: pSig O, pSig I/O, pSig I/O	**F13**
• Ex: pSig O, pSig I/O, R	**F14**
• Ex: pSig O, R, R	**F15**
• Ex: pSig O, R, None	**F16**
• Ex: aSig O, None, None	**F21**
• Ex: aSig O, aSig I/O, None	**F22**
• Ex: aSig O, aSig I/O, aSig I/O	**F23**
• Ex: aSig O, aSig I/O, R	**F24**
• Ex: aSig O, R, R	**F25**
• Ex: aSig O, R, None	**F26**

Notes on I/O configurations:

a or p suffix: The I/O module is selected at ordering with either active or passive function.

Signal: The output can be selected for Current (0 or 4 to 20 mA), frequency or pulse function in the menu.

I: Discrete status input to the flowmeter. Functions are selected in the menu including 'Freeze output', 'Reset totalizer' (only CH3&4).

R: Relay output for discrete status reporting. Function is selected in the menu, including 'Error', 'High flow warning'.

The MLFB structure for FC330 systems must be filled to **this level**, including "**-Z**" options A.., B.., E.. and F.

	Order code
Add-on options and accessories	
Please add "**-Z**" to Article No. and specify Order code(s).	
Certificates	
Certificate EN 10204-2.2 confirmation of pressure containing material	**C01**
Certificate EN 10204-3.1 material (wetted parts)	**C02**
Material certificate EN 10204-3.2 with inspection	**C03**
Certificate NACE MR0175-2009 + MR0103-2012	**C04**
Certificate EN 10204-2.1 Declaration of compliance with the order	**C05**
Insp. Certificate EN 10204-3.1 for visual, dimensional and functional test	**C06**
Certificate EN 10204-3.1 PMI Positive material ident. of pressure-cont./wetted parts (confirmation only)	**C07**
Certificate EN 10204-3.1 P-test Pressure-test acc. AD2000	**C08**
Test pack (pressure test, non-destructive welding test, welder & welding procedure certificate)	**C09**
Certificate EN10204-3.1welding X-ray / Dye-penetration test of weldings (pressure cont.)	**C10**
Certificate EN10204-2.1 Declaration of accuracy	**C11**
Certificate EN10204-3.1 PMI Positive material ident. of pressure-cont./wetted parts (including heat analysis)	**C12**

	Order code
Add-on options and accessories	
Please add "**-Z**" to Article No. and specify Order code(s).	
Customer selected calibration	
DN 15 ... 50: Multi-point (5 flows × 1 pass) Flow 10 ... 100 % of Q_{norm}	**D60**
DN 15 ... 50: Multi-point (10 flows × 1 pass) Flow 10 ... 100 % of Q_{norm}	**D61**
DN 80: Multi-point (5 flows × 1 pass) Flow 10 ... 100 % of Q_{norm}	**D62**
DN 80: Multi-point (10 flows × 1 pass) Flow 10 ... 100 % of Q_{norm}	**D63**
DN 100: Multi-point (5 flows × 1 pass) Flow 10 ... 100 % of Q_{norm}	**D64**
DN 100: Multi-point (10 flows × 1 pass) Flow 10 ... 100 % of Q_{norm}	**D65**
DN 150: Multi-point (5 flows × 1 pass) Flow 10 ... 100 % of Q_{norm}	**D66**
DN 150: Multi-point (8 flows × 1 pass) Flow 10 ... 100 % of Q_{norm}	**D67**
Cable	
None	**L50**
5 m (16.4 ft), sensor cable, 4 wire, with 2 pcs M12 plugs mounted	**L51**
5 m (16.4 ft), sensor cable, 4 wire, without plugs for terminal connection	**L52**
10 m (32.8 ft), sensor cable, 4 wire, with 2 pcs M12 plugs mounted	**L55**
10 m (32.8 ft), sensor cable, 4 wire, without plugs for terminal connection	**L56**
25 m (82 ft), sensor cable, 4 wire, with 2 pcs M12 plugs mounted	**L59**
25 m (82 ft), sensor cable, 4 wire, without plugs for terminal connection	**L60**
50 m (164 ft), sensor cable, 4 wire, with 2 pcs M12 plugs mounted	**L63**
50 m (164 ft), sensor cable, 4 wire, without plugs for terminal connection	**L64**
75 m (246 ft), sensor cable, 4 wire, with 2 pcs M12 plugs mounted	**L67**
75 m (246 ft), sensor cable, 4 wire, without plugs for terminal connection	**L68**
Sensor options	
FCS300 marine approval (in preparation)	**S22**
SD-Card accessibility via USB	
(not allowed in USA by Patent)	
Mass storage enabled	**S30**
Additional data	
Please add "**-Z**" to Article No. and specify Order code(s) and plain text.	
Tag name	
Tag name plate, stainless steel	**Y17**

Operating instructions for SITRANS FC330

Description	Article No.
English	
• for firmware V 4.0 and onwards	**A5E44030648**
German	
• for firmware V 4.0 and onwards	**TBD**

All literature is available to download for free, in a range of languages, at

www.siemens.com/processinstrumentation/documentation

© Siemens 2020

SITRANS FC310 flowmeter system

Overview

The compact flowmeter SITRANS FC310 can be ordered for industrial, hygienic or NAMUR service.

Intended for integration into OEM skids, machines or pre-assembled plant systems, the flowmeter is based on the latest developments within digital signal processing technology - engineered for high measuring performance:

- Fast response to rapid changes in flow
- Fast dosing applications with control in host system
- High immunity against process noise
- High turndown ratio of flowrates
- Suitable for liquid and gas service
- Easy to install, commission and maintain

With all global marine approvals the FC310 is ideal for integration in ship fuel efficiency and environmental measurement systems as well as bunkering solutions.

The FCT010 transmitter delivers true multi-parameter measurements i.e. massflow, density, temperature.

FC310 is available with Modbus RTU (RS 485) multi-drop serial communication.

The flowmeter is supplied with SensorFlash, a micro SD card containing all relevant certificates. The SITRANS FC310 flowmeter system consists of a SITRANS FCS300 sensor and a SITRANS FCT010 transmitter always compact mounted.

Benefits

- It is compact and light, fitting neatly into dense piping arrangements
- Effective separation of measurement from plant vibration
- Reliable measurements due to high signal to noise ratio
- Short overall length; easy drop-in replacement into most existing installations
- Direct connection to host with high-speed Modbus simplifies machine or skid construction and set-up
- Modbus RS 485 RTU allows simple and easy integration with all Modbus masters with fast update rate of process values.

Technical specifications

Sizes	DN 15 (½") DN 25 (1") DN 50 (2") DN 80 (3") DN 100 (4") DN 150 (6")
Accuracy	± 0.10 % or ± 0.20 % Addional ± 0.40 % for gases
Repeatability	± 0.05 %
Flow range	
(water @ 1 bar pressure loss)	
• DN 15	4 500 kg/h (163.3 lb/min)
• DN 25	20 500 kg/h (753.2 lb/min)
• DN 50	49 000 kg/h (1 800 lb/min)
• DN 80	122 000 kg/h (4 483 lb/min)
• DN 100	273 000 kg/h (10 031 lb/min)
• DN 150	459 200 kg/h (16 873 lb/min)
Power supply	12-27 V DC; 1.1 W
Weight	4.6 ... 207 kg
Material	
• Sensor	
- Measuring tubes	316L stainless steel or nickel alloy C4
- Enclosure	304 stainless steel
• Transmitter	Aluminum with corrosion-resistant coating class C4
Enclosure rating	IP67
Pressure ratings	
• Measuring tubes	
- 316L	100 bar (1 450 psi)
- Nickel alloy C4	100 bar (1 450 psi)
• Sensor enclosure	No pressure containment
Temperature ratings	
• Process medium	-50 ... +205 °C (-58 ... +400 °F)
• Ambient	-40 ... +60 °C (-40 ... +140 °F)
Process connections	
• Flanges	EN 1092-1 B1, EN 1092-1 B2, EN 1092-1 D, ANSI/ASME B16.5, JIS B 2220
• Pipe threads	ASME B1.20 (NPT) female pipe thread, ISO 228-1 G female pipe thread (BSPP)
• Hygienic threads	DIN 11851, SMS 1145
• Hygienic clamps	DIN 32676 Hygenic Clamp Row A
Approvals	
• Hazardous area (zone 1)	ATEX, IECEx, EAC Ex, cCSAus, NEPSI, EAC No dust approval
• Pressure equipment	PED, CRN (in preparation)
• Hygienic	EHEDG (DN 25 ... 80) (in preparation)
• Marine	Germanischer Lloyd/det Norske Veritas, Bureau Veritas, Lloyds of London, American Bureau of Shipping, RINA (Italy)
NAMUR	NAMUR-compliant (e.g. NE 21, NE 41 and NE 132)
Communication	Modbus RS 485 RTU
EMC performance	
Emission	EN 55011/CISPR-11 (Class B)
Immunity	EN/IEC 61326-1 (Industry)
Mechanical load	18 ... 400 Hz random The flow meter will mechanically tolerate 3.17 g RMS in all directions. Flow accuracy cannot be guaranteed under all conditions.

© Siemens 2020

Selection and ordering data

	Article No.																		Ord. code
SITRANS FC310 digital coriolis flowmeter with SITRANS FCS300 standard flow sensor with hygienic and flange/pipe thread connections and compact mounting with FCT010 transmitter ↗	**7ME4631-**	■	■	■	■	■	-	■	■	■	■			■	■	■			
↗ Click on the Article No. for the online configuration in the PIA Life Cycle Portal.																			
Sensor size, connector size																			
DN 15, DN 10 (½", 3/8")	**3**	**F**																	
DN 15, DN 15 (½", ½")	**3**	**G**																	
DN 15, DN 20 (½", ¾")	**3**	**H**																	
DN 25, DN 20 (1", ¾")	**3**	**K**																	
DN 25, DN 25 (1", 1")	**3**	**L**																	
DN 25, DN 40 (1", 1½")	**3**	**N**																	
DN 50, DN 40 (2", 1½")	**4**	**B**																	
DN 50, DN 50 (2", 2")	**4**	**C**																	
DN 50, DN 65 (2", 2½")	**4**	**D**																	
DN 80, DN 65 (3", 2½")	**4**	**J**																	
DN 80, DN 80 (3", 3")	**4**	**K**																	
DN 80, DN 100 (3", 4")	**4**	**L**																	
DN 100, DN 80 (4", 3")	**5**	**M**																	
DN 100, DN 100 (4", 4")	**5**	**N**																	
DN 100, DN 150 (4", 6")	**5**	**Q**																	
DN 150, DN 100 (6", 4")	**6**	**D**																	
DN 150, DN 150 (6", 6")	**6**	**F**																	
DN 150, DN 200 (6", 8")	**6**	**H**																	
Process connection																			
EN 1092-1 B1, PN 16			**A**	**0**															
EN 1092-1 B1, PN 40			**A**	**1**															
EN 1092-1 B2, PN 63			**A**	**2**															
EN 1092-1 B2, PN 100			**A**	**3**															
EN 1092-1 D, PN 40			**A**	**5**															
ASME B16.5 RF, class 150			**D**	**1**															
ASME B16.5 RF, class 300			**D**	**2**															
ASME B16.5 RF, class 600			**D**	**3**															
ASME B16.5 RF, class 900 (p- and t-rating as class 600)			**D**	**4**															
ANSI B16.5-2009, class 1500 (p- and t-rating as class 600)			**D**	**5**															
ISO 228-1G female pipe thread			**E**	**1**															
ASME B1.20.1 NPT female pipe thread			**E**	**3**															
DIN 11851 hygienic screwed			**F**	**1**															
DIN 32676 hygienic clamp Row A			**G**	**1**															
SMS 1145 hygienic screwed			**K**	**1**															
JIS B2220/10K			**L**	**2**															
JIS B2220/20K			**L**	**4**															
EN 1092-1, PN 16, NAMUR length			**N**	**1**															
EN 1092-1, PN 40, NAMUR length			**N**	**2**															
Wetted parts material																			
AISI 316L/1.4435/1.4404					**1**														
AISI 316L/1.4435/1.4404 (polished)					**2**														
Nickel alloy C4					**3**														

	Article No.																		Ord. code
SITRANS FC310 digital coriolis flowmeter with SITRANS FCS300 standard flow sensor with hygienic and flange/pipe thread connections and compact mounting with FCT010 transmitter	**7ME4631-**	■	■	■	■	■	-	■	■	■	■			■	■	■			
Calibration/Accuracy class																			
0.2 % flow, 10 kg/m³ density							**0**												
0.1 % flow, 2 kg/m³ density							**1**												
Mounting style, transmitter housing and material																			
Compact, IP67, aluminum									**D**										
Ex approval																			
Non-Ex										**A**									
ATEX II 2G zone 1										**C**									
IECEx Gb (zone 1)										**F**									
US (cCSAus), Div 1										**L**									
Canada (cCSAus), class I, zone 1										**M**									
NEPSI										**N**									
INMETRO (in preparation)										**P**									
KCC (in preparation)										**Q**									
EAC										**U**									
Local User Interface																			
Blind											**1**								

Selection and ordering data

	Order code
Further designs	
Please add "**-Z**" to Article No. and specify Order code(s).	
Cable glands	
None (replacement sensor)	**A00**
Metric, no glands	**A01**
Metric, plastic	**A02**
Metric, brass/Ni plated	**A05**
Metric, stainless steel	**A06**
NPT, no glands	**A11**
NPT, plastic	**A12**
NPT, brass/Ni plated	**A15**
NPT, stainless steel	**A16**
Metric thread with M12 socket fitted	**A20**
Sofware functions and CT approvals	
Standard	**B11**
I/O configuration Ch1	
Modbus RTU RS 485	**E14**
I/O configuration Ch2, Ch3 and Ch4	
None	**F00**
Add-on options and accessories	
Please add "**-Z**" to Article No. and specify Order code(s).	
Certificates	
Certificate EN 10204-2.2 confirmation of pressure containing material	**C01**
Certificate EN 10204-3.1 material (wetted parts)	**C02**
Material certificate EN 10204-3.2 with inspection	**C03**
Certificate NACE MR0175-2009 + MR0103-2012	**C04**
Certificate EN 10204-2.1 Declaration of compliance with the order	**C05**

© Siemens 2020

Selection and ordering data

	Order code
Add-on options and accessories	
Please add "**-Z**" to Article No. and specify Order code(s).	
Insp. Certificate EN 10204-3.1 for visual, dimensional and functional test	**C06**
Certificate EN 10204-3.1 PMI Positive material ident. of pressure-cont./wetted parts (confirmation only)	**C07**
Certificate EN 10204-3.1 P-test Pressure-test acc. AD2000	**C08**
Test pack (pressure test, non-destructive welding test, welder & welding procedure certificate)	**C09**
Certificate EN 10204-3.1 welding X-ray / Dye-penetration test of weldings (pressure cont.)	**C10**
Certificate EN 10204-2.1 Declaration of accuracy	**C11**
Certificate EN 10204-3.1 PMI Positive material ident. of pressure-cont./wetted parts (including heat analysis)	**C12**
Customer selected calibration	
DN 15 ... 50, multi-point, 5 flows × 1 pass Flow 10 ... 100 % of Q_{norm}	**D60**
DN 15 ... 50, multi-point, 10 flows × 1 pass Flow 10 ... 100 % of Q_{norm}	**D61**
DN 80, multi-point, 5 flows × 1 pass Flow 10 ... 100 % of Q_{norm}	**D62**
DN 80, multi-point, 10 flows × 1 pass Flow 10 ... 100 % of Q_{norm}	**D63**
DN 100, multi-point, 5 flows × 1 pass Flow 10 ... 100 % of Q_{norm}	**D64**
DN 100, multi-point, 10 flows × 1 pass Flow 10 ... 100 % of Q_{norm}	**D65**
DN 150, multi-point, 5 flows × 1 pass Flow 10 ... 100 % of Q_{norm}	**D66**
DN 150, multi-point, 8 flows × 1 pass Flow 10 ... 100 % of Q_{norm}	**D67**
Cable	
None	**L50**
5 m (16.4 ft), sensor cable, 4 wire, with 2 pcs M12 plugs mounted	**L51**
5 m (16.4 ft), sensor cable, 4 wire, without plugs for terminal connection	**L52**
5 m (16.4 ft), sensor cable, 4 wire, with 1 pc M12 plug mounted	**L53**
10 m (32.8 ft) sensor cable, 4 wire, with 2 pcs M12 plugs mounted	**L55**
10 m (32.8 ft), sensor cable, 4 wire, without plugs for terminal connection	**L56**
10 m (32.8 ft), sensor cable, 4 wire, with 1 pc M12 plug mounted	**L57**
25 m (82 ft), sensor cable, 4 wire, with 2 pcs M12 plugs mounted	**L59**
25 m (82 ft), sensor cable, 4 wire, without plugs for terminal connection	**L60**

	Order code
Add-on options and accessories	
Please add "**-Z**" to Article No. and specify Order code(s).	
25 m (82 ft), sensor cable, 4 wire, with 1 pc M12 plug mounted	**L61**
50 m (164 ft), sensor cable, 4 wire, with 2 pcs M12 plugs mounted	**L63**
50 m (164 ft), sensor cable, 4 wire, without plugs for terminal connection	**L64**
50 m (164 ft), sensor cable, 4 wire, with 1 pc M12 plug mounted	**L65**
75 m (246 ft), sensor cable, 4 wire, with 2 pcs M12 plugs mounted	**L67**
75 m (246 ft), sensor cable, 4 wire, without plugs for terminal connection	**L68**
75 m (246 ft), sensor cable, 4 wire, with 1 pc M12 plug mounted	**L69**
Sensor options	
FCS300 marine approval	**S22**
Additional data	
Please add "**-Z**" to Article No. and specify Order code(s) and plain text.	
Tag name	
Tag name plate, stainless steel	**Y17**

Operating instructions for SITRANS FC310

Description	Article No.
English	
• for firmware V 4.0 and onwards	**A5E44036384**
German	
• for firmware V 4.0 and onwards	**TBD**

All literature is available to download for free, in a range of languages, at

www.siemens.com/processinstrumentation/documentation

Accessories

Description	Article No.	
SITRANS I300 Isolating power supply – Ex barrier	**A5E39832532**	

© Siemens 2020

Overview

Full integration in the Siemens SIMATIC systems PCS7 or in TIA portal with FCT070 faceplates with the ET 200SP ST & HF powerful IO system for compact control cabinets. The complete flowmeter system consists of a SITRANS FCS300 sensor and a SIMATIC ET 200SP Coriolis module FCT070 transmitter.

The transmitter FCT070 offers real-time data processing and the display of all measuring and status data of the Coriolis flowmeter.

For hazardous area the FSC300 sensor can be placed in Ex Zone 1 or Class 1 Div 1 locations. Together with the SITRANS I300 power/barrier module the FCT070 transmitter can be place in Zone 2 or Div 2 areas.

Benefits

- FCS300 sensor in sizes from DN 15 to 150 mm in a large verity of process connections and wetted materials
- Short overall length; easy drop-in replacement into most existing installations
- Full hazardous area solutions
- Easy integration into automation process control as TIA portal and PCS7
- Easy selection and integration of flowmeters via TIA selector
- Cost effective integration of Coriolis flowmeters for PLC controlled machines
- SITRANS FCT070 ET 200SP technology module and can combined with all other SIMATIC ET200 ST & HF modules
- The FCT070 has all high-end transmitter functionality integrated including the advanged fraction tables on bord
- Fast and trouble-free communication between the flow meter and the PLC through digital data communication with up to 10 ms update rate
- Integrated advanced two-stage batch controller functionality without additional modules. I/Os are onboard

© Siemens 2020

Technical specifications

Sizes	DN 15 (½") DN 25 (1") DN 50 (2") DN 80 (3") DN 100 (4") DN 150 (6")
Accuracy	± 0.10 % or 0.20 % for liquids additional ± 0.40 for gases
Repeatability	± 0.05 %
Flow range (liquids)	
(water @ 1 bar pressure loss) (Q_{nom})	
• DN 15	4 500 kg/h (163.3 lb/min)
• DN 25	20 500 kg/h (753.2 lb/min)
• DN 50	49 000 kg/h (1 800 lb/min)
• DN 80	122 000 kg/h (4 483 lb/min)
• DN 100	273 000 kg/h (10 031 lb/min)
• DN 150	459 200 kg/h (16 873 lb/min)
Measurement of	Mass flow, volume flow, density, temperature, fraction A flow, fraction A %, fraction B flow, fraction B %
Architecture	Remote configuration
System integration	PCS7 and TIA portal with faceplates
Power supply	24 V DC, 19.2 ... 28.8 V
Material	
• Sensor	
• Wetted parts	316L stainless steel or nickel alloy C4
• Enclosure	304 stainless steel
• Transmitter	Aluminum with corrosion-resistant coating class C4
Enclosure rating	Sensor: IP67 FCT070 Transmitter: IP20
Pressure ratings	
• Measuring tubes	
• 316L	100 bar (1 450 psi)
• Nickel alloy C4	100 bar (1 450 psi)
• Sensor enclosure	No pressure containment
Temperature ratings	
• Process medium	-50 ... +205 °C (-58 ... +400 °F)
• Ambient	-40 ... +60 °C (-40 ... +140 °F)[1)]
• Display	-20 ... +60 °C (-4 ... +140 °F)
Process connections	
• Flanges	EN 1092-1 B1, EN 1092-1 B2, EN 1092-1 D, ANSI/ASME B16.5, JIS B 2220
• Pipe threads	ASME B1.20 (NPT) female pipe thread, ISO 228-1 G female pipe thread (BSPP)
• Hygienic threads	DIN 11851, SMS 1145
• Hygienic clamps	DIN 32676 hygenic clamp Row A

Approvals	
• Hazardous area	Sensor FCS300: Zone 1 & Class 1 Div 1 ATEX, IECEx, EAC Ex, CSA, cCSAus, NEPSI, EAC No dust approval FCT070 transmitter: Zone 2 & Class 1 Div 2 ATEX, IECEx, EAC Ex, CSA, cCSAus, FM, NEPSI, EAC
• Pressure equipment	PED, CRN
• Hygienic	EHEDG (DN 25 ... DN 80) (in preparation)
NAMUR	NAMUR-compliant (e.g. NE 21, NE 41, NE 107 and NE 132)
I/O	2 digital Input and 2 digital output Single and 2 stage batch function
Totalizer	3 totalizer
Communication	Integrated PROFINET for SIMATIC integration and other PROFINET Controllers
EMC performance	
Emission	EN 55011/CISPR-11 (Class A)
Immunity	EN/IEC 61326-1 (Industry)
Mechanical load	18 ... 1000 Hz random The flow meter will mechanically tolerate 3.17 g RMS in all directions. Flow accuracy cannot be guaranteed under all conditions.

© Siemens 2020

Selection and ordering data

Coriolis sensor SITRANS FCS300 with DSL ready for FCT070 trasmitter ↗	Article No. 7ME4637-												Ord. code
	■	■	■	■	■	-	■	■	■	■	■	■	■
↗ Click on the Article No. for the online configuration in the PIA Life Cycle Portal.													
Sensor size, connector size													
DN 15, DN 10 (½", 3/8")	3	F											
DN 15, DN 15 (½", ½")	3	G											
DN 15, DN 20 (½", ¾")	3	H											
DN 25, DN 20 (1", ¾")	3	K											
DN 25, DN 25 (1", 1")	3	L											
DN 25, DN 40 (1", 1½")	3	N											
DN 50, DN 40 (2", 1½")	4	B											
DN 50, DN 50 (2", 2")	4	C											
DN 50, DN 65 (2", 2½")	4	D											
DN 80, DN 65 (3", 2½")	4	J											
DN 80, DN 80 (3", 3")	4	K											
DN 80, DN 100 (3", 4")	4	L											
DN 100, DN 80 (4", 3")	5	M											
DN 100, DN 100 (4", 4")	5	N											
DN 100, DN 150 (4", 6")	5	Q											
DN 150, DN 100 (6", 4")	6	D											
DN 150, DN 150 (6", 6")	6	F											
DN 150, DN 200 (6", 8")	6	H											
Process connection													
EN 1092-1 B1, PN 16			A	0									
EN 1092-1 B1, PN 40			A	1									
EN 1092-1 B2, PN 63			A	2									
EN 1092-1 B2, PN 100			A	3									
EN 1092-1 D, PN 40			A	5									
ASME B16.5 RF, Class 150			D	1									
ASME B16.5 RF, Class 300			D	2									
ASME B16.5 RF, Class 600			D	3									
ASME B16.5 RF, Class 900 (p- and t-rating as Class 600)			D	4									
ANSI B16.5-2009, Class 1500 (p- and t-rating as Class 600)			D	5									
ISO 228-1G female pipe thread			E	1									
ASME B1.20.1 NPT female pipe thread			E	3									
DIN 11851 hygienic screwed			F	1									
DIN 32676 hygienic clamp Row A			G	1									
SMS 1145 hygienic screwed			K	1									
JIS B2220/10K			L	2									
JIS B2220/20K			L	4									
EN 1092-1, PN 16, NAMUR length			N	1									
EN 1092-1, PN 40, NAMUR length			N	2									
Wetted parts material													
AISI 316L/1.4435/1.4404					1								
AISI 316L/1.4435/1.4404 (polished)					2								
Nickel alloy C4					3								

Coriolis sensor SITRANS FCS300 with DSL ready for FCT070 trasmitter	Article No. 7ME4637-												Ord. code
	■	■	■	■	■	-	■	■	■	■	■	■	■
Calibration/Accuracy class													
0.2 % flow, 10 kg/m³ density							0						
0.1 % flow, 2 kg/m³ density							1						
Mounting style, transmitter housing and material													
Compac, IP67, aluminum								D					
Ex approval (sensor)													
Non-Ex									A				
ATEX II 2G zone 1									C				
IECEx Gb (zone 1)									F				
US (cCSAus), Div 1									L				
Canada (cCSAus), class I, zone 1									M				
NEPSI									N				
INMETRO									P				
KCC (in preparation)									Q				
EAC									U				
Local User Interface													
Blind										1			

Selection and ordering data

	Order code
Further designs	
Please add "**-Z**" to Article No. and specify Order code(s).	
Cable glands	
Metric, no glands	**A01**
Metric, plastic	**A02**
Metric, brass/Ni plated	**A05**
Metric, stainless steel	**A06**
NPT, no glands	**A11**
NPT, plastic	**A12**
NPT, brass/Ni plated	**A15**
NPT, stainless steel	**A16**
Metric thread with M12 socket fitted	**A20**
Sofware functions and CT approvals	
Standard software DSL	**B10**
I/O configuration Ch1	
No output channel (integration of FCT070)	**E00**
I/O configuration Ch2, Ch3 and Ch4	
None	**F00**

© Siemens 2020

Selection and ordering data

	Order code
Add-on options and accessories	
Please add "**-Z**" to Article No. and specify Order code(s).	
Certificates	
Certificate EN 10204-2.2 confirmation of pressure containing material	**C01**
Certificate EN 10204-3.1 material (wetted parts)	**C02**
Material certificate EN 10204-3.2 with inspection	**C03**
Certificate NACE MR0175-2009 + MR0103-2012	**C04**
Certificate EN 10204-2.1 Declaration of compliance with the order	**C05**
Insp. Certificate EN 10204-3.1 for visual, dimensional and functional test	**C06**
Certificate EN 10204-3.1 PMI Positive material ident. of pressure-cont./wetted parts (confirmation only)	**C07**
Certificate EN 10204-3.1 P-test Pressure-test acc. AD2000	**C08**
Test pack (pressure test, non-destructive welding test, welder & welding procedure certificate)	**C09**
Certificate EN 10204-3.1 welding X-ray / Dye-penetration test of weldings (pressure cont.)	**C10**
Certificate EN 10204-2.1 Declaration of accuracy	**C11**
Certificate EN 10204-3.1 PMI Positive material ident. of pressure-cont./wetted parts (including heat analysis)	**C12**
Customer selected calibration	
DN 15 ... 50, multi-point, 5 flows × 1 pass Flow 10 ... 100% of Q_{norm}	**D60**
DN 15 ... 50, multi-point, 10 flows × 1 pass Flow 10 ... 100% of Q_{norm}	**D61**
DN 80, multi-point, 5 flows × 1 pass Flow 10 ... 100% of Q_{norm}	**D62**
DN 80, multi-point, 10 flows × 1 pass Flow 10 ... 100% of Q_{norm}	**D63**
DN 100, multi-point, 5 flows × 1 pass Flow 10 ... 100% of Q_{norm}	**D64**
DN 100, multi-point, 10 flows × 1 pass Flow 10 ... 100% of Q_{norm}	**D65**
DN 150, multi-point, 5 flows × 1 pass Flow 10 ... 100% of Q_{norm}	**D66**
DN 150, multi-point, 8 flows × 1 pass Flow 10 ... 100% of Q_{norm}	**D67**

	Order code
Add-on options and accessories	
Please add "**-Z**" to Article No. and specify Order code(s).	
Cable	
No sensor cable	**L50**
5 m (16.4 ft), sensor cable, 4 wire, without plugs for terminal connection	**L52**
5 m (16.4 ft), sensor cable, 4 wire, with 1 pcs M12 plugs mounted	**L53**
10 m (32.8 ft), standard, without plugs	**L56**
10 m (32.8 ft), sensor cable, 4 wire, with 1 pcs M12 plugs mounted	**L57**
25 m (82 ft), standard, without plugs	**L60**
25 m (82 ft), sensor cable, 4 wire, with 1 pcs M12 plugs mounted	**L61**
50 m (164 ft), standard, without plugs	**L64**
50 m (164 ft), sensor cable, 4 wire, with 1 pcs M12 plugs mounted	**L65**
75 m (246 ft), standard, without plugs	**L68**
75 m (246 ft), sensor cable, 4 wire, with 1 pcs M12 plugs mounted	**L69**
Additional data	
Please add "**-Z**" to Article No. and specify Order code(s) and plain text.	
Tag name	
Tag name plate, stainless steel	**Y17**

Description	Article No.	
SITRANS FCT070 Transmitter for ET 200SP	**7ME4138-6AA00-0BB1**	
BU20-P12+A0+4B, PU1 Baseunit plate for ET 200SP	**6ES7193-6BP20-0BB0** **6ES7193-6BP20-0BB1**	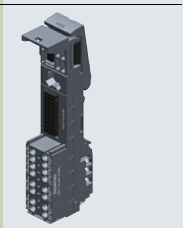
SITRANS I300 Isolating power supply – Ex barrier	**A5E39832532**	

© Siemens 2020

Overview

The SITRANS FCS400 sensor is available in DN 15; DN 25 and DN 50 mm sizes in stainless steel AISI 316 L. The sensor design consists of process connections, inlet and outlet manifolds mounted in a stiff frame and two parallel tubes equally sharing the process medium flow.

The sensing tubes are curved in the CompactCurve shape which gives high sensitivity and low pressure loss. The CompactCurve shape was selected to ensure that the smallest flows are measured with optimal signal to noise ratio.

The super compact sensor design with a split flow dual tube design with very high driver frequency is suitable for high end applications in all industry segments e.g. Chemical, F&B , O&G and Power.

A variety of process connections available to cover all common process connections and pressure ratings.

The sensor has a solid stainless steel fully welded enclosure to protect the measuring tubes from any harsh environments. For hazardous area applications the FCS400 comes in a number of common harzardous area approved like ATEX, IECEx, cCSAus, EAC, and NEPSI.

For sanitary applications the sensor is available with polished inside wetted parts and carry the EHEDG and 3A sanitary certifications (in preparation).

For the chemical industry the FCS400 sensors are available with standardized NAMUR inbuilding length (in preparation).

Integration

The SITRANS FCS400 Massflow sensor is suitable for both indoor and outdoor installation and meets the requirements of Protection Class IP67/NEMA 4X. Optionally the sensor can be ordered with hazardous certification to Zone 1 + 21 (ATEX, IECEx, cCSAus, EAC Ex, NEPSI) or Class I + II + III Div. 1 (cCSAus).

The flowmeter is bidirectional and can be installed in any orientation. The sensor is self-draining in many positions, with vertical mounting preferred.

It is important to ensure that the sensor tubes are always completely filled with homogeneous fluid; otherwise measuring errors may occur. Suitable fluids are clean liquids, pastes, light slurries or gases. Condensing vapours, aerated liquids or slush are not recommended.

The materials in contact with the process medium must be evaluated for corrosion and erosion resistances for long sensor life.

The pressure drop through the sensor is a function of the properties of the fluid and the flow rate. A pressure loss and accuracy calculator can be found on the Siemens Internet site
https://www.siemens.com/fc430/sizer

The preferred flow direction is indicated by an arrow on the sensor. Flow in the direction of the arrow will be measured as positive. The flow direction can be adjusted at the transmitter to compensate for reverse installation.

Installation orientation

The optimal installation orientation is vertical with the flow upwards. This ensures that suspended solids or bubbles are completely pushed through the sensor. A drain valve below the sensor will allow the pipe and sensor to drain completely.

Supports

In order to support the weight of the flowmeter and to ensure reliable measurements when external effects exist (e.g. plant vibrations), the sensor should be installed in rigidly supported pipelines.

Supports or hangers should be installed symmetrically and stress-free in close proximity to both of the process connections.

Shut-off devices

To conduct a system zero adjustment, secure shut-off devices are required in the pipeline.

Where possible, shut-off devices should be installed both upstream and downstream of the flowmeter.

© Siemens 2020

Configuration

Installation guidelines

- The mass flowmeter does not require any flow conditioning or straight inlet pipe sections. Care should be exercised however to ensure that any upstream valves, gates, sight glasses etc. do not cavitate and are not set into vibration by the flow.
- It is always preferred to place the flowmeter upstream of any control valve or other pipeline component which may cause flashing, cavitation or vibrations.
- The presence of gas bubbles in the fluid may result in erroneous measurements, particularly in the density measurement. Therefore the flowmeter should not be installed at the lowest pressure point in the liquid piping system or where vapour can collect. Install the meter in pipeline sections with high pressure to maintain system pressure and compress any bubbles.
- Drop lines downstream from the flow sensor should be avoided to prevent the meter tube from draining during flowing conditions. A back-pressure device or orifice is recommended to ensure that flow does not separate within the flow sensor but the metering section remains at positive pressure at all times while there is flow.
- The flowmeter should not come into contact with any other objects. Avoid making attachments to the housing except for the pressure guard components (if required).
- When the connecting pipeline is larger than the sensor size, suitable standard reducers may be installed. A selection of oversize and undersize connections can be ordered - refer to the sizes tables below.
- The flow sensor may be supported at the junction between process connection and the manifold, but should not be used to support adjacent piping. Ensure that the piping is also supported on both sides so that connection stresses are neutral.
- If strong vibrations exist in the pipeline, they should be damped using elastic pipeline elements. The damping devices must be installed outside the supported flowmeter section. Direct connection of flexible elements to the sensor should be avoided.
- Make sure that any dissolved gases, which are present in many liquids, do not outgas. The back pressure at the outlet should be at least 0.2 bar (3 psi) above the vapour pressure of the process fluid.
- Assure that operation below the vapour pressure cannot occur particularly for fluids with low latent heat of vaporisation.
- The sensor should not be installed in the vicinity of strong electromagnetic fields, e.g. near motors, pumps, variable frequency drives, transformers etc.
- When operating meters on a common mounting base the sensors should be mounted and spaced separate from each other to avoid cross-talk and other vibration interferences.
- When operating meters in interconnected pipelines the pipes should be decoupled to prevent cross talk.

Remote system cabling

The system is designed so that standard instrumentation cable with four cores and overall screen or two screened pairs can be used, or cable sets can be ordered with the flowmeter. The cable can be ordered in various set lengths and terminated in the field.

Be aware of maximum sensor length cable depending on product selection, currently 75 m. Data transmission speed and process variable update rates may be affected by the cable characteristics. For best results, choose a cable with the following electrical characteristics:

Property	Unit	Value
Resistance	[Ω/km]	59
Characteristic impedance	[Ω]	100 @ 1 MHz
Insulation resistance	[MΩ/km]	200
Maximum voltage	[V]	300

The flowmeter system applies maximum 15 V DC in operation and is certified intrinsically safe. The complete system is insulation tested to 1 500 V in production.

Cabling solutions which can be ordered with the flowmeter are as follows:

1. High performance plugged cable using M12 connectors into prepared sockets
2. Cable glands for either metric or NPT threaded terminal housings.
3. Plain cable in set lengths to be passed through flexible and rigid conduit (not supplied) for metric or NPT threaded terminal housings

Cable for items 1, 2 and 3 are available either gray for standard applications or light blue for Ex applications to identify the circuit as intrinsically safe.

Insulation and heating

For applications where pipeline insulation is required for personnel protection or process temperature maintenance, the SITRANS FCS400 flow sensor may also be insulated. The form and material of insulation is not prescribed and entirely depends on the practices at the application location or plant.

Insulation must not be crowded around the sensor pedestal but shaped at a 45° cone to allow the pedestal to radiate excess heat and maintain a suitable working temperature within the front-end housing.

Where trace heating is employed, an electric heating jacket can be ordered as an accessory. It is shaped to the sensor body and controlled from a weatherproof setpoint device.

The jacket can heat the sensor enclosure up to 200 °C (392 °F). However the maximum temperature increase is limited to 70 °C. Further insulation is also recommended for personnel protection or low loss temperature maintenance.

© Siemens 2020

Technical specifications

Flow sensor FCS400		
Parameter	**Unit**	**Value**
Process media		• Fluid Group 1 (suitable for dangerous fluids) • Aggregate state: Paste/light slurry, liquid and gas
Process pressure range	[barg (psi)]	316L: 0 ... 100 (0 ... 1 450)
Process temperature range • DN 15 ... DN 50	[°C (°F)]	-50 ... +200 (-58 ... +392)
Ambient temperature range	[°C (°F)]	-40 ... +60 (-40 ... +140)
Transport temperature range	[°C (°F)]	-40 … +70 (-40 … +158)
Density range	[kg/m^3 (lb/ft^3)]	1 … 5 000 (0.062 … 312.2)
No. of process values • Primary process values • Derieved process values		 • Mass flow • Density • Process medium temperature • Volume flow • Standard volume flow (with reference density) • Fraction A:B • Fraction % A:B

Performance specifications		Sensor		
Parameter	**Unit**	**DN 15**	**DN 25**	**DN 50**
Max. zero point error	[kg/h (lb/min)]	0.2 (0.007)	2 (0.8)	7.5 (0.27)
Q_{min} (1 % error)[1]	[kg/h (lb/min)]	20 (0.735)	240 (8.92)	800 (29.4)
Q_{nom} (1 bar pressure)[1]	[kg/h (lb/min)]	3 700 (136)	20 500 (753.2)	49 000 (1 800)
Q_{max}[1]	[kg/h (lb/min)]	6 400 (235.2)	35 000 (1 286)	90 000 (3 307)
Linearity error mass flow • for liquids[2] • for gases	 [%] [%]	 ± 0.1 ± 0.35	 ± 0.1 ± 0.35	 ± 0.1 ± 0.35
Repeatability mass flow	[%]	± 0.05	± 0.05	± 0.05
Density accuracy standard calibration[3]	[kg/m^3 (lb/ft^3)]	± 5 (± 0.31)	± 5 (± 0.31)	± 5 (± 0.31)
Density accuracy extended calibration[3]	[kg/m^3 (lb/ft^3)]	± 0.5 (± 0.031)	± 0.5 (± 0.031)	± 0.5 (± 0.031)
Temperature error	[°C (°F)]	± 0.5 (± 0.9)	± 0.5 (± 0.9)	± 0.5 (± 0.9)

[1] For gas applications the max. flowrate is calculated at Mach-Number = 03.
[2] Increased error can be expected for gas mass flow measurement.
[3] Liquid only.

Pressure/temperature curves

With two major exceptions, the pressure rating of the flow sensors is independent of the process medium temperature. Design rules for flange connections in both the EN 1092-1 and ASME B16.5 standards dictate pressure derating with increasing temperature. The charts below show the effect of process medium temperature on the pressure ratings for the flanges within the FCS400.

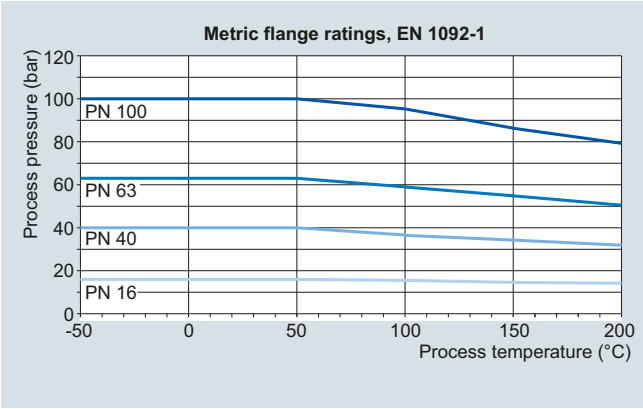

EN 1092-1 flanged sensors

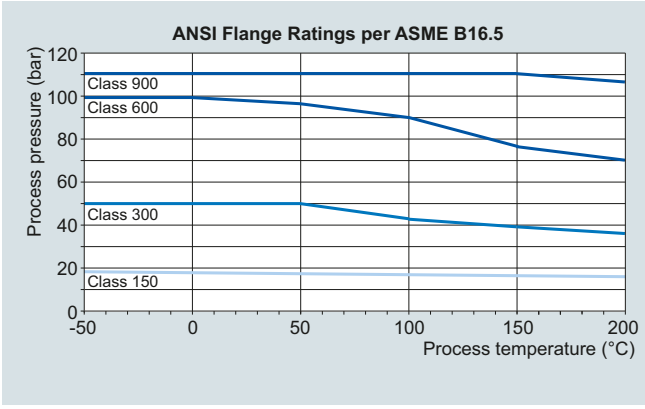

ASME B16.5 flanged sensors

© Siemens 2020

Technical specifications (continued)

Sensor variants

SITRANS FCS400 sensors are available in a wide range of process connections. The available combinations of type, sensor size and connection size are shown in the tables below.

Standard sensors

Sensor	Connection	EN 1092-1 B1, PN 16	EN 1092-1 B1, PN 40	EN 1092-1 B1, PN 63	EN 1092-1 B1, PN 100	EN 1092-1 B1, PN 160[2]	EN 1092-1 D Nut, PN 40	EN 1092-1 D Nut, PN 63	EN 1092-1 D Nut, PN 100	EN 1092-1 D Nut, PN 160[2]	ANSI B16.5-2009, class 150	ANSI B16.5-2009, class 300	ANSI B16.5-2009, class 600	ANSI B16.5-2009, class 900[1]	ISO 228-1 G pipe thread	ASME B1.20.1 NPT pipe thread	DIN 11851 hygienic screwed	DIN 32676 hygienic tri-clamp	DIN 11864-1A aseptic screwed	DIN 11864-2A aseptic flanged	DIN 11864-3A aseptic clamp	ISO 2852 hygienic clamped	ISO 2853 hygienic screwed	SMS 1145 hygienic screwed	12-VCO-4 quick connect	JIS B2220:2004/10K	JIS B2220:2004/20K	JIS B2220:2004/40K	JIS B2220:2004/63K
Standard: 7ME461.-...																													
DN 15 (½")	DN 6 (¼")														●	●													
	DN 10 (3/8")																●												
	DN 15 (½")	●	●	●	●	●	●	●	●	●	●	●	●	●	●	●	●	●	●	●	●				●	●	●	●	●
	DN 20 (¾")		●								●	●	●					●											
	DN 25 (1")	●	●		●												●					●	●	●					
DN 25 (1")	DN 15 (½")																												
	DN 25 (1")	●	●	●	●	●	●	●	●	●	●	●	●	●	●	●	●	●	●	●	●	●	●	●		●	●	●	●
	DN 32 (1¼")		●														●												
	DN 40 (1½")	●	●		●						●	●	●					●				●	●						
DN 50 (2")	DN 25 (1")																												
	DN 40 (1½")	●	●	●	●	●	●	●									●		●	●	●	●	●	●					
	DN 50 (2")	●	●	●	●	●	●	●	●	●	●	●	●	●	●	●	●	●	●	●	●	●	●	●		●	●	●	●

[1] Apply class 600 p and t ratings for class 900 and class 1500 flanges.
[2] P and T rating as PN 100.

Hygienic sensor variants (in preparation)

The hygienic sensors all have polished internal wetted material and a maximum internal surface roughness Ra < 0.8 µm and are EHEDG and 3A approved.

Aseptic flanged process connections

The aseptic flanges offered for FCS400 conform with the standard DIN 11864-2A BF-A. The flange fitted to the sensor is therefore the back flange and the seal is an O-ring.

The flange dimensions in the FCS400 program are as follows:

Size DN	Pipe	Bore d_1	Ring OD d_{11}	Bolt circle d_5	Bolt holes	Flange diameter d_{10}
10	13 × 1.5	10	22.4	37	4 × Ø9	54
15	19 × 1.5	16	28.4	42	4 × Ø9	59
20	23 × 1.5	20	32.4	47	4 × Ø9	64
25	29 × 1.5	26	38.4	53	4 × Ø9	70
32	35 × 1.5	32	47.7	59	4 × Ø9	76
40	41 × 1.5	38	53.7	65	4 × Ø9	82
50	53 × 1.5	50	65.7	77	4 × Ø9	94
65	70 × 2.0	66	81.7	95	8 × Ø9	107
80	85 × 2.0	81	97.7	112	8 × Ø11	113

DIN 11864-2A BF-A flange dimensions

© Siemens 2020

Dimensional drawings

Sensor dimensions

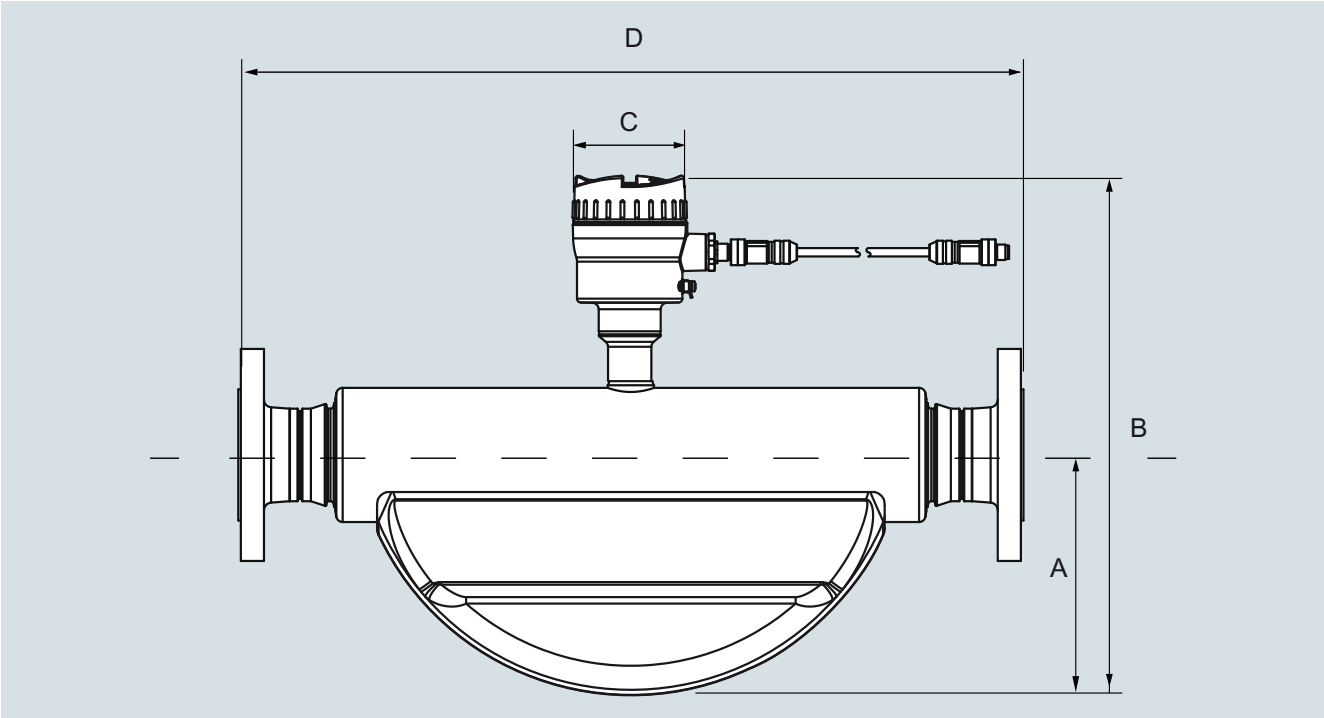

Sensor		A		B		B1		Weight[1]	
[DN]	[inch]	[mm]	[inch]	[mm]	[inch]	[mm]	[inch]	[kg]	[lb]
15	½	90	3.54	280	11.0	314	12.4	4.6	10.1
25	1	123	4.84	315	12.4	349	13.8	7.9	17.4
50	2	187	7.36	390	15.4	424	16.8	25.7	56.7

SITRANS FCS400, dimensions in mm (inch), weights in kg (lb), for a EN 1092 PN 40 flanged version.

The built-in length D depends on the flange.

[1] For FCT030 compact add 4 kg (8.8 lb)

Overall length

The overall length (built-in length (D)) of each sensor depends on the connection standard and the pressure rating. The tables below summarize the dimensions available at the time of publishing. Please contact Siemens for further information about our desired process connection specification.

© Siemens 2020

Dimensional drawings (continued)

Standard: 7ME461.-...

Sensor	**DN 15 (½")**					**DN 25 (1")**			**DN 50 (2")**	
Connection	**DN 6 (¼")**	**DN 10 (3/8")**	**DN 15 (½")**	**DN 20 (¾")**	**DN 25 (1")**	**DN 25 (1")**	**DN 32 (1¼")**	**DN 40 (1½")**	**DN 40 (1½")**	**DN 50 (2")**
EN 1092-1 B1, PN 16			265		265	360			610	610
EN 1092-1 B1, PN 40			265		265	360		365	610	610
EN 1092-1 B1, PN 63			265			360			610	610
EN 1092-1 B1, PN 100			270		275	360			610	610
EN 1092-1 B1, PN 160			270			360				620
ANSI B16.5, class 150			270	270		360		365		620
ANSI B16.5, class 300			270	270		360		380		620
ANSI B16.5, class 600			270	285		360		380		620
ANSI B16.5, class 900			290			385				620
ISO 228-1 GH pipe thread	265		265			365				620
ANSI B1.20.1 NPT pipe thread	265		270			365				620
DIN 11851 hygienic screwed[1)]		265	265		193	360	360		610	610
DIN 32676-C hygienic tri-clamp			265	265		360		360		610
DIN 11864-1 aseptic screwed[1)]			265			360			610	610
DIN 11864-2 aseptic flange[1)]			265			360			620	610
DIN 11864-3 aseptic clamp[1)]			265			360			610	610
ISO 2852 hygienic clamp[1)]					265	360			610	610
ISO 2853 hygienic screwed[1)]			265			360		274		610
SMS 1145 hygienic screwed			285			360			610	610
12-VCO-4 quick connect			285							
JIS B2220/10K			265			360			620	610
JIS B2220/20K			265			360			620	610
JIS B2220/40K			270			360			620	610
JIS B2220/63K			275			370				620

[1)] Available with 3A and EHEDG certification.

Sensor	**DN 15 (½")**					**DN 25 (1")**			**DN 50 (2")**	
Connection	**DN 6 (¼")**	**DN 10 (3/8")**	**DN 15 (½")**	**DN 20 (¾")**	**DN 25 (1")**	**DN 25 (1")**	**DN 32 (1¼")**	**DN 40 (1½")**	**DN 40 (1½")**	**DN 50 (2")**
EN 1092-1 B1, PN 16			10.43		10.43	14.17			24.02	24.02
EN 1092-1 B1, PN 40			10.43		10.43	14.17		14.37	24.02	24.02
EN 1092-1 B1, PN 63			10.43			14.17			24.02	24.02
EN 1092-1 B1, PN 100			10.63		10.83	14.17			24.02	24.02
EN 1092-1 B1, PN 160			10.63			14.17				24.41
ANSI B16.5, class 150			10.63	10.63		14.17		14.37		24.41
ANSI B16.5, class 300			10.63	10.63		14.17		14.96		24.41
ANSI B16.5, class 600			10.63	11.22		14.17		14.96		24.41
ANSI B16.5, class 900			11.4			15.2				24.41
ISO 228-1 GH pipe thread	10.43		10.43			14.37				24.41
ANSI B1.20.1 NPT pipe thread	10.43		10.63			14.37				24.41
DIN 11851 hygienic screwed[1)]		10.43	10.43		7.60	14.17	14.17		24.02	24.02
DIN 32676-C hygienic tri-clamp			10.43	10.43		14.17		14.17		24.02
DIN 11864-1 aseptic screwed[1)]			10.43	10.43		14.17				24.02
DIN 11864-2 aseptic flange[1)]			10.43	10.43		14.17		10.78	24.41	24.02
DIN 11864-3 aseptic clamp[1)]			10.43			14.17			24.02	24.02
ISO 2852 hygienic clamp[1)]					10.43	14.17			24.02	24.02
ISO 2853 hygienic screwed[1)]			10.43			14.17		10.78		24.02
SMS 1145 hygienic screwed			10.43			14.17			24.02	24.02
12-VCO-4 quick connect			11.2							
JIS B2220/10K			10.4			14.2			24.4	24.0
JIS B2220/20K			10.4			14.2			24.4	24.0
JIS B2220/40K			10.6			14.2			24.4	24.0
JIS B2220/63K			10.8			14.6				24.4

[1)] Available with 3A and EHEDG certification.

SITRANS FCS400, overall length (D), dimensions in mm.

© Siemens 2020

Overview

The complete flowmeter system SITRANS FC consist of a new FCS400 sensor in sizes DN 15 to DN 50 mm and a FCT030 multichannel/multifunctional in compact or remote versions. The flowmeter is based on the latest developments within digital signal processing technology – engineered for high measuring performance:

- Fast response to rapid changes in flow
- Fast dosing applications
- High immunity against process noise
- High turndown ratio of flowrates
- Suitable for liquid and gas service
- Easy to install, commission and maintain
- Aerated flow filtering system, for advanced filtering of fluids with gas or air bubbles
- Build in Data logger for all process variables and status messages (FCT030)
- Build in Batch functionality (FCT030)

The SITRANS FC430 is available with current output HART 7.5, Modbus RS 485 RTU, PROFIBUS DP or PROFIBUS PA as standard on Channel 1. Additional I/O functions can be freely configured for analog, pulse, frequency, relay or status output, or binary input.

The transmitter comes with a user configurable graphical display and SensorFlash, a micro SD card for configuration backup, firmware update and data storage.

Benefits

- It is truely compact and light, fitting neatly into dense piping arrangements
- Easy maintenance because modules can be exchanged rapidly
- Effective separation of measurement from plant vibration
- Highly secure operation in safety critical applications
- Non-volatile memory of all setup and operation data
- Reliable measurements due to high signal to noise ratio
- Secure, digital transfer of measurement data from the sensor
- Shortest overall length; easy drop-in replacement into most existing installations
- Marine Application: fuel management & consumption; bunkering solutions; boiler control

Technical specifications

SITRANS FC430	
Sizes	DN 15 (½") DN 25 (1") DN 50 (2")
Accuracy	± 0.10 %
Repeatability	± 0.05 %
Flow range (liquids) Q_{nom} (water @ 1 bar pressure loss) • DN 15 (½") • DN 25 (1") • DN 50 (2")	 3 700 kg/h (8 157 lb/h) 11 500 kg/h (25 353 lb/h) 52 000 kg/h (114 640 lb/h)
Architecture	Compact or remote configuration
Display	Full graphical display, 240 × 160 pixels with selection of 6 languages
Power supply	20 ... 90 V DC ± 10 %; 100 ... 240 V AC ± 10 %, 47 ... 63 Hz ± 10 %
Materials • Sensor - Wetted parts - Enclosure • Transmitter	 316L stainless steel 304 stainless steel Aluminum with corrosion-resistant coating class C4
Enclosure rating	IP67[1)]
Pressure ratings • Measuring tubes - 316L - Sensore enclosure • Sensor enclosure burst pressure	 100 bar (1 450 psi) 20 bar (DN 15, DN 25) 17 bar (DN 50) >160 bar (depending on size)
Temperature ratings • Process medium - DN 15 ... DN 50 • Ambient • Display	 -50 ... +200 °C (-58 ... +392 °F) -40 ... +60 °C (-40 ... +140 °F)[1)] -20 ... +60 °C (-4 ... +140 °F)
Process connections • Flanges • Pipe threads • Hygienic threads • Hygienic clamps	 EN 1092-1 B1, EN 1092-1 D, ANSI/ASME B16.5, JIS B 2220, DIN 11864-2 ASME B1.20 (NPT), ISO 228-1 G (BSPP), VCO Quick-connect DIN 11851, DIN 11864-1A, ISO 2853, SMS 1145 DIN 11864-3A, DIN 32676-C Triclamp, ISO 2852
Approvals • Hazardous area • Pressure equipment • Hygienic (in preparation)	 ATEX, IECEx, EAC Ex, NEPSI, CSA, cCSA us PED, CRN 3A, EHEDG
NAMUR	NAMUR-compliant (e.g. NE 21, NE 41, NE 107 and NE 132)
I/O	Up to 4 channels combining ana- log, relay or digital outputs and binary input
Communication	HART PROFIBUS PA PROFIBUS DP Modbus RTU (RS 485)
EMC performance • Emission • Immunity	 EN 55011/CISPR-11 (Class A) EN/IEC 61326-1 (Industry)
Mechanical load	18 ... 400 Hz random The flow meter will mechanically tolerate 3.17 g RMS in all directions. Flow accuracy cannot be guaranteed under all conditions.

[1)] If operating outdoors, avoid direct sunlight, paritcularly in warm climatic regions.

© Siemens 2020

SITRANS FC430 flowmeter for OEM customers

Selection and ordering data

SITRANS FC430 digital coriolis flowmeter with SITRANS FCS400 standard flow sensor compact or remote mounting with FCT030 transmitter ↗	Article No. 7ME4613-	Ord. code
↗ Click on the Article No. for the online configuration in the PIA Life Cycle Portal.		
Sensor size, connector size		
DN 15, DN 6 (½", ¼")	3 E	
DN 15, DN 10 (½", 3/8")	3 F	
DN 15, DN 15 (½", ½")	3 G	
DN 15, DN 20 (½", ¾")	3 H	
DN 15, DN 25 (½", 1")	3 J	
DN 25, DN 25 (1", 1")	3 L	
DN 25, DN 32 (1", 1¼")	3 M	
DN 25, DN 40 (1", 1½")	3 N	
DN 50, DN 40 (2", 1½")	4 B	
DN 50, DN 50 (2", 2")	4 C	
DN 50, DN 65 (2", 2½")	4 D	
Process connection		
EN 1092-1 B1, PN 16	A 0	
EN 1092-1 B1, PN 40	A 1	
EN 1092-1 B1, PN 63	A 2	
EN 1092-1 B1, PN 100	A 3	
EN 1092-1 D, PN 40	A 5	
EN 1092-1 D, PN 63	A 6	
EN 1092-1 D, PN 100	A 7	
EN 1092-1 D, PN 160 (max operation pressure 100 bar)	A 8	
ASME B16.5 RF, Class 150	D 1	
ASME B16.5 RF, lass 300	D 2	
ASME B16.5 RF, lass 600	D 3	
ASME B16.5 RF, Class 900 (p- and t-rating as Class 600)	D 4	
ISO 228-1G female pipe thread	E 1	
ASME B1.20.1 NPT female pipe thread	E 3	
DIN 11851 hygienic screwed	F 1	
DIN 32676, ASME, Form C (inch) (tri-clamp)	G 1	
DIN 11864-1 GS Form A Row A, Form A = O-ring type hygienic, aseptic thread connector, hygienic class H3	H 1	
DIN 11864-2 BF Form A Row A, Form A = O-ring type hygienic, aseptic flange connector, hygienic class H3	H 2	
DIN 11864-3 BKS Form A Row A, Form A = O-ring type hygienic, aseptic clamp connector, hygienic class H3	H 3	
ISO 2852 hygienic clamp	J 1	
ISO 2853 hygienic thread	J 2	
SMS 1145 hygienic screwed	K 1	
Quick connect	K 5	
JIS B2220/10K	L 2	
JIS B2220/20K	L 4	
JIS B2220/40K	L 6	
JIS B2220/63K	L 7	

SITRANS FC430 digital coriolis flowmeter with SITRANS FCS400 standard flow sensor compact or remote mounting with FCT030 transmitter	Article No. 7ME4613-	Ord. code
Wetted parts material		
AISI 316L/1.4435/1.4404	1	
AISI 316L/1.4435/1.4404 (polished; EHEDG; 3A) (in preparation)	2	
Calibration/Accuracy class		
0.1 % flow, 5 kg/m³ density	1	
0.1 % flow, 0.5 kg/m³ density	4	
Standard fraction (with density 0.5 kg/m³)	8	
Mounting style, transmitter housing and material		
None (replacement sensor)	A	
Compact, IP67 fieldmount, aluminum	D	
Remote, IP67 fieldmount, aluminum, M12	G	
Remote, IP67 fieldmount, aluminum, T/Box	K	
Remote, IP67, wall mount, aluminium	U	
Ex approval (depending on variant)		
Non-Ex	A	
ATEX (zone 1 / zone 21)	C	
IECEx (zone 1 / zone 21)	F	
US (cCSAus), Div 1	L	
Canada (cCSAus), zone 1	M	
NEPSI	N	
INMETRO (in preparation)	P	
KCC (in preparation)	Q	
EAC	U	
Local User Interface		
None (replacement sensor, DSL only)	0	
Blind	1	
Graphical, 240 × 160 pxl	3	

© Siemens 2020

Selection and ordering data

	Order code
Further designs	
Please add "**-Z**" to Article No. and specify Order code(s).	
Cable glands	
None (replacement sensor)	**A00**
Metric, no glands	**A01**
Metric, nylon, limited to -20 °C/-4 °F	**A02**
Metric, brass/Ni plated	**A05**
Metric, stainless steel	**A06**
NPT, no glands	**A11**
NPT, nylon, limited to -20 °C/-4 °F	**A12**
NPT, brass/Ni plated	**A15**
NPT, stainless steel	**A16**
Metric thread with M12 socket fitted	**A20**
Sofware functions and CT approvals	
None (replacement sensor)	**B10**
Standard	**B11**
I/O configuration Ch1	
No output channel	**E00**
4 ... 20 mA HART Active/Passive (non-Ex)	**E02**
Ca 4 ... 20 mA HART active (Ex)	**E06**
Ca 4 ... 20 mA HART passive (Ex)	**E07**
PROFIBUS PA	**E10**
PROFIBUS DP (non-Ex)	**E11**
Modbus RTU RS 485	**E14**
I/O configuration Ch2, Ch3 and Ch4	
None	**F00**
• Non Ex: Sig O, None, None	**F01**
• Non Ex: Sig O, Sig I/O, None	**F02**
• Non Ex: Sig O, Sig I/O, Sig I/O	**F03**
• Non Ex: Sig O, Sig I/O, R	**F04**
• Non Ex: Sig O, R, R	**F05**
• Non Ex: Sig O, R, None	**F06**
• Ex: pSig O, None, None	**F11**
• Ex: pSig O, pSig I/O, None	**F12**
• Ex: pSig O, pSig I/O, pSig I/O	**F13**
• Ex: pSig O, pSig I/O, R	**F14**
• Ex: pSig O, R, R	**F15**
• Ex: pSig O, R, None	**F16**
• Ex: aSig O, None, None	**F21**
• Ex: aSig O, aSig I/O, None	**F22**
• Ex: aSig O, aSig I/O, aSig I/O	**F23**
• Ex: aSig O, aSig I/O, R	**F24**
• Ex: aSig O, R, R	**F25**
• Ex: aSig O, R, None	**F26**

Notes on I/O configurations:

a or p suffix: The I/O module is selected at ordering with either active or passive function.

Signal: The output can be selected for Current (0 or 4 to 20 mA), frequency or pulse function in the menu.

I: Discrete status input to the flowmeter. Functions are selected in the menu including 'Freeze output', 'Reset totalizer' (only CH3&4).

R: Relay output for discrete status reporting. Function is selected in the menu, including 'Error', 'High flow warning'.

The MLFB structure for FC330 systems must be filled to **this level**, including "**-Z**" options A.., B.., E.. and F.

	Order code
Add-on options and accessories	
Please add "**-Z**" to Article No. and specify Order code(s).	
Certificates	
Pressure testing certificate CRN	**C01**
Pressure testing certificate PED	**C02**
Material certificate EN 10204-3.1 (wetted parts)	**C05**
Welding inspection certificate	**C07**
Factory certificate EN 10204 2.1	**C10**
Factory certificate EN 10204 2.2	**C11**
Cleaned for oil and grease	**C50**
Customer selected calibration	
Multi-point (5 flows × 2 pass) Flow 10 ... 100 % of Q_{norm}	**Y60**
Multi-point (10 flows × 1 pass) Flow 10 ... 100 % of Q_{norm}	**Y61**
Multi-point calibration (5 flows × 2 pass) Flow 2 ... 20 % of Q_{norm}	**Y69**
Multi-point calibration (5 flows × 2 pass) Flow 5 ... 50 % of Q_{norm}	**Y71**
Multi-point calibration (10 flows × 1 pass) Flow 2 ... 20 % of Q_{norm}	**Y72**
Multi-point calibration (10 flows × 1 pass) Flow 5 ... 50 % of Q_{norm}	**Y73**
Cable	
None	**L50**
5 m (16.4 ft), sensor cable, 4 wire, with 2 pcs M12 plugs mounted	**L51**
5 m (16.4 ft), sensor cable, 4 wire, without plugs for terminal connection	**L52**
10 m (32.8 ft), sensor cable, 4 wire, with 2 pcs M12 plugs mounted	**L55**
10 m (32.8 ft), sensor cable, 4 wire, without plugs for terminal connection	**L56**
25 m (82 ft), sensor cable, 4 wire, with 2 pcs M12 plugs mounted	**L59**
25 m (82 ft), sensor cable, 4 wire, without plugs for terminal connection	**L60**
50 m (164 ft), sensor cable, 4 wire, with 2 pcs M12 plugs mounted	**L63**
50 m (164 ft), sensor cable, 4 wire, without plugs for terminal connection	**L64**
75 m (246 ft), sensor cable, 4 wire, with 2 pcs M12 plugs mounted	**L67**
75 m (246 ft), sensor cable, 4 wire, without plugs for terminal connection	**L68**
Sensor options	
FCS400 marine approval	**S22**
SD-Card accessibility via USB	
(not allowed in USA by Patent)	
Mass storage enabled	**S30**
Region-specific approvals and certificates	
South Korea (KCC)	**W28**
Additional data	
Please add "**-Z**" to Article No. and specify Order code(s) and plain text.	
Tag name	
Tag name plate, stainless steel	**Y17**

© Siemens 2020

Selection and ordering data (continued)

Operating instructions for SITRANS FC430

Description	Article No.
English	
• for firmware V 4.0 and onwards	**A5E39789392**
German	
• for firmware V 4.0 and onwards	**TBD**

All literature is available to download for free, in a range of languages, at

www.siemens.com/processinstrumentation/documentation

Heating jacket for FCS400

Description	Article No.	
Heating jacket, indoor use, 0 ... 200 °C (32 ...392 °F) max. temperature. Complete with 5 m (16.4 ft) high temperature cable fitted.		
Dedicated plug connection to included controller		
• 230 V AC		
- DN 15 electric	**A5E33035287**	
- DN 25 electric	**A5E33035324**	
- DN 50 electric	**A5E33035325**	
• 115 V AC		
- DN 15 electric	**A5E32877520**	
- DN 25 electric	**A5E32877556**	
- DN 50 electric	**A5E32877557**	
Heating jacket controller, IP65. Digital display for 0 ... 200 °C (32 ...392 °F) control setpoint		
• 230 V AC	**A5E03839193**	
• 115 V AC	**A5E03839194**	

© Siemens 2020

Overview

The compact flowmeter SITRANS FC410 is available in sizes DN 15, DN 25 and DN 50 for standard and hygienic applications.

Intended for integration into OEM skids, machines or pre-assembled plant systems. The sensor design is the marked leader in compact design which makes it easy to integrate in the compact skids. The flowmeter is based on the latest developments within digital signal processing technology - engineered for high measuring performance:

- Fast response to rapid changes in flow
- Markeds most compact sensor design
- Sensor with sanitary EHEDG and 3 A certification (in preparation)
- Fast dosing applications with control in host system
- High immunity against process noise
- High turndown ratio of flowrates
- Suitable for liquid and gas service
- Easy to install, commission and maintain

With all global marine approvals the FC410 is ideal for integration in ship fuel efficiency and environmental measurement systems. The FCT010 transmitter delivers true multi-parameter measurements i.e. massflow, density, temperature.

FC410 is available with Modbus RTU (RS 485) multi-drop serial communication.The flowmeter is supplied with SensorFlash, a micro SD card containing all relevant certificates. The SITRANS FC410 flowmeter system consists of a SITRANS FCS400 sensor and a SITRANS FCT010 transmitter always compact mounted.

Benefits

- It is truely compact and light, fitting neatly into dense piping arrangements
- Easy maintenance because modules can be exchanged rapidly
- Effective separation of measurement from plant vibration
- Reliable measurements due to high signal to noise ratio
- Shortest overall length; easy drop-in replacement into most existing installations
- Direct connection to host with high-speed Modbus simplifies machine or skid construction and set-up
- Modbus RS 485 RTU allows simple and easy integration with all Modbus masters with fast update rate of process values

Technical specifications

SITRANS FC410	
Sizes	DN 15 (½") DN 25 (1") DN 50 (2")
Accuracy	± 0.10 %
Repeatability	± 0.05 %
Flow range (liquids)	
Q_{nom} (water @ 1 bar pressure loss)	
• DN 15 (½")	3 700 kg/h (8 157 lb/h)
• DN 25 (1")	11 500 kg/h (25 353 lb/h)
• DN 50 (2")	52 000 kg/h (114 640 lb/h)
Architecture	Compact configuration
Display	Full graphical display, 240 × 160 pixels with selection of 6 languages
Power supply	12 ... 27 V DC; 1.1 W
Materials	
• Sensor	
- Wetted parts	316L stainless steel
- Enclosure	304 stainless steel
• Transmitter	Aluminum with corrosion-resistant coating class C4
Enclosure rating	IP67
Pressure ratings	
• Measuring tubes	
- 316L	100 bar (1 450 psi)
- Sensore enclosure	20 bar (DN 15, DN 25) 17 bar (DN 50)
• Sensor enclosure burst pressure	>160 bar (depending on size)
Temperature ratings	
• Process medium	
- DN 15 ... DN 50	-50 ... +200 °C (-58 ... +392 °F)
• Ambient	-40 ... +60 °C (-40 ... +140 °F)[1]
Process connections	
• Flanges	EN 1092-1 B1, EN 1092-1 D, ANSI/ASME B16.5, JIS B 2220, DIN 11864-2
• Pipe threads	ASME B1.20 (NPT), ISO 228-1 G (BSPP), VCO Quick-connect
• Hygienic threads	DIN 11851, DIN 11864-1A, ISO 2853, SMS 1145
• Hygienic clamps	DIN 11864-3A, DIN 32676-C Tri-clamp, ISO 2852
Approvals	
• Hazardous area	ATEX, IECEx, EAC Ex, NEPSI, CSA, cCSA us
• Pressure equipment	PED, CRN
• Hygienic	3A, EHEDG (in preparation)
NAMUR	NAMUR-compliant (e.g. NE 21, NE 41, NE 107 and NE 132)
I/O	Up to 4 channels combining ana- log, relay or digital outputs and binary input
Communication	Modbus RTU (RS 485)
EMC performance	
• Emission	EN 55011/CISPR-11 (Class A)
• Immunity	EN/IEC 61326-1 (Industry)
Mechanical load	18 ... 400 Hz random The flow meter will mechanically tolerate 3.17 g RMS in all directions. Flow accuracy cannot be guaranteed under all conditions.

[1] If operating outdoors, avoid direct sunlight, paritcularly in warm climatic regions.

© Siemens 2020

SITRANS FC410 flowmeter for OEM customers

Selection and ordering data

SITRANS FC410 digital coriolis flowmeter with SITRANS FCS400 standard flow sensor compact or remote mounting with FCT010 transmitter ↗	Article No. 7ME4611-	Ord. code
↗ Click on the Article No. for the online configuration in the PIA Life Cycle Portal.		
Sensor size, connector size		
DN 15, DN 6 (½", ¼")	3 E	
DN 15, DN 10 (½", 3/8")	3 F	
DN 15, DN 15 (½", ½")	3 G	
DN 15, DN 20 (½", ¾")	3 H	
DN 15, DN 25 (½", 1")	3 J	
DN 25, DN 25 (1", 1")	3 L	
DN 25, DN 32 (1", 1¼")	3 M	
DN 25, DN 40 (1", 1½")	3 N	
DN 50, DN 40 (2", 1½")	4 B	
DN 50, DN 50 (2", 2")	4 C	
DN 50, DN 65 (2", 2½")	4 D	
Process connection		
EN 1092-1 B1, PN 16	A 0	
EN 1092-1 B1, PN 40	A 1	
EN 1092-1 B1, PN 63	A 2	
EN 1092-1 B1, PN 100	A 3	
EN 1092-1 D, PN 40	A 5	
EN 1092-1 D, PN 63	A 6	
EN 1092-1 D, PN 100	A 7	
EN 1092-1 D, PN 160 (max operation pressure 100 bar)	A 8	
ASME B16.5 RF, Class 150	D 1	
ASME B16.5 RF, Class 300	D 2	
ASME B16.5 RF, lass 600	D 3	
ASME B16.5 RF, Class 900 (p- and t-rating as Class 600)	D 4	
ISO 228-1G female pipe thread	E 1	
ASME B1.20.1 NPT female pipe thread	E 3	
DIN 11851 hygienic screwed	F 1	
DIN 32676, ASME, Form C (inch) (tri-clamp)	G 1	
DIN 11864-1 GS Form A Row A, Form A = O-ring type hygienic, aseptic thread connector, hygienic class H3	H 1	
DIN 11864-2 BF Form A Row A, Form A = O-ring type hygienic, aseptic flange connector, hygienic class H3	H 2	
DIN 11864-3 BKS Form A Row A, Form A = O-ring type hygienic, aseptic clamp connector, hygienic class H3	H 3	
ISO 2852 hygienic clamp	J 1	
ISO 2853 hygienic thread	J 2	
SMS 1145 hygienic screwed	K 1	
Quick connect	K 5	
JIS B2220/10K	L 2	
JIS B2220/20K	L 4	
JIS B2220/40K	L 6	
JIS B2220/63K	L 7	

SITRANS FC410 digital coriolis flowmeter with SITRANS FCS400 standard flow sensor compact or remote mounting with FCT010 transmitter	Article No. 7ME4611-	Ord. code
Wetted parts material		
AISI 316L/1.4435/1.4404	1	
AISI 316L/1.4435/1.4404 (polished; EHEDG; 3A) (in preparation)	2	
Calibration/Accuracy class		
0.1 % flow, 5 kg/m³ density	1	
0.1 % flow, 0.5 kg/m³ density	4	
Mounting style, transmitter housing and material		
None (replacement sensor)	A	
Compact, IP67 fieldmount, aluminum	D	
Ex approval (depending on variant)		
Non-Ex	A	
ATEX (zone 1 / zone 21)	C	
IECEx (zone 1 / zone 21)	F	
US (cCSAus), Div 1	L	
Canada (cCSAus), zone 1	M	
NEPSI	N	
INMETRO (in preparation)	P	
KCC (in preparation)	Q	
EAC	U	
Local User Interface		
Blind	1	

© Siemens 2020

Selection and ordering data

	Orde code
Further designs	
Please add "**-Z**" to Article No. and specify Order code(s).	
Cable glands	
None (replacement sensor)	**A00**
Metric, no glands	**A01**
Metric, plastic	**A02**
Metric, brass/Ni plated	**A05**
Metric, stainless steel	**A06**
NPT, no glands	**A11**
NPT, plastic	**A12**
NPT, brass/Ni plated	**A15**
NPT, stainless steel	**A16**
Metric thread with M12 socket fitted	**A20**
Sofware functions and CT approvals	
Standard	**B11**
I/O configuration Ch1	
Modbus RTU RS 485	**E14**
I/O configuration Ch2, Ch3 and Ch4	
None	**F00**
Add-on options and accessories	
Please add "**-Z**" to Article No. and specify Order code(s).	
Certificates	
Pressure testing certificate CRN	**C01**
Pressure testing certificate PED	**C02**
Material certificate EN 10204-3.1 (wetted parts)	**C05**
Welding inspection certificate	**C07**
Factory certificate EN 10204 2.1	**C10**
Factory certificate EN 10204 2.2	**C11**
Cleaned for oil and grease	**C50**
Customer selected calibration	
Multi-point (5 flows × 2 pass) Flow 10 ... 100 % of Q_{norm}	**Y60**
Multi-point (10 flows × 1 pass) Flow 10 ... 100 % of Q_{norm}	**Y61**
Multi-point calibration (5 flows × 2 pass) Flow 2 ... 20 % of Q_{norm}	**Y69**
Multi-point calibration (5 flows × 2 pass) Flow 5 ... 50 % of Q_{norm}	**Y71**
Multi-point calibration (10 flows × 1 pass) Flow 2 ... 20 % of Q_{norm}	**Y72**
Multi-point calibration (10 flows × 1 pass) Flow 5 ... 50 % of Q_{norm}	**Y73**
Cable	
None	**L50**
5 m (16.4 ft), sensor cable, 4 wire, with 2 pcs M12 plugs mounted	**L51**
5 m (16.4 ft), sensor cable, 4 wire, without plugs for terminal connection	**L52**
5 m (16.4 ft), sensor cable, 4 wire, with 1 pc M12 plugs mounted	**L53**
10 m (32.8 ft), sensor cable, 4 wire, with 2 pcs M12 plugs mounted	**L55**
10 m (32.8 ft), sensor cable, 4 wire, without plugs for terminal connection	**L56**
10 m (32.8 ft), sensor cable, 4 wire, with 1 pc M12 plugs mounted	**L57**
25 m (82 ft), sensor cable, 4 wire, with 2 pcs M12 plugs mounted	**L59**

	Order code
Further designs	
Please add "**-Z**" to Article No. and specify Order code(s).	
25 m (82 ft), sensor cable, 4 wire, without plugs for terminal connection	**L60**
25 m (82 ft), sensor cable, 4 wire, with 1 pc M12 plugs mounted	**L61**
50 m (164 ft), sensor cable, 4 wire, with 2 pcs M12 plugs mounted	**L63**
50 m (164 ft), sensor cable, 4 wire, without plugs for terminal connection	**L64**
50 m (164 ft), sensor cable, 4 wire, with 1 pc M12 plugs mounted	**L65**
75 m (246 ft), sensor cable, 4 wire, with 2 pcs M12 plugs mounted	**L67**
75 m (246 ft), sensor cable, 4 wire, without plugs for terminal connection	**L68**
75 m (246 ft), sensor cable, 4 wire, with 1 pc M12 plugs mounted	**L69**
Sensor options	
FCS400 marine approval	**S22**
Region-specific approvals and certificates	
South Korea (KCC)	**W28**
Additional data	
Please add "**-Z**" to Article No. and specify Order code(s) and plain text.	
Tag name	
Tag name plate, stainless steel	**Y17**

Operating instructions for SITRANS FC410

Description	Article No.
English • for firmware V 4.0 and onwards	**A5E39789214**
German • for firmware V 4.0 and onwards	**TBD**

All literature is available to download for free, in a range of languages, at

www.siemens.com/processinstrumentation/documentation

© Siemens 2020

SITRANS FCS400 with FCT070 transmitter

Overview

Full integration in the Siemens SIMATIC systems PCS7 or in TIA portal with FCT070 Faceplates with the ET 200SP ST & HF powerful IO system for compact control cabinets. The complete flowmeter system consists of a SITRANS FCS400 sensor and a SIMATIC ET200 SP Coriolis module FCT070 transmitter.

TM FCT070 offers real-time data processing and the display of all measuring and status data of the Coriolis flowmeter.

For hazardous area the FSC400 sensor can be placed in Ex Zone 1/21 or Class1 Div 1 locations . Together with the Sitrans I300 power/barrier module the FCT070 transmitter can be place in Zone 2 or Div 2 areas.

Benefits

- FCS400 sensor in sizes from DN 15 to DN 50 mm in a large verity of process connections and wetted materials
- Markeds most compact sensor design
- Sensor with sanitary EHEDG and 3A certification
- Full hazardous area solutions
- Easy integration into automation process control as TIA portal and PCS7
- Easy selection and integration of flow meters via TIA-Selector
- Cost effective integration of Coriolis flow meters for PLC controlled machines
- SITRANS FCT070 ET 200SP technology module and can combined with all other SIMATIC ET200 ST & HF modules.
- The FCT070 has all high-end transmitter functionality integrated including the advanged fraction tables on bord
- Fast and trouble-free communication between the flow meter and the PLC through digital data communication with up to 10 ms update rate
- Integrated advanced Two-stage batch controller functionality without additional modules. I/Os are onboard.

Technical specifications

SITRANS FCS400 with FCT070 transmitter	
Sizes	DN 15 (½") DN 25 (1") DN 50 (2")
Accuracy	± 0.10 %
Repeatability	± 0.05 %
Flow range (liquids)	
Q_{nom} (water @ 1 bar pressure loss)	
• DN 15 (½")	3 700 kg/h (8 157 lb/h)
• DN 25 (1")	11 500 kg/h (25 353 lb/h)
• DN 50 (2")	52 000 kg/h (114 640 lb/h)
Measurement of	Mass flow, volume flow, density, temperature Fraction A flow, fraction A % Fraction B flow, fraction B %
Architecture	Remote configuration
System integration	ET200 SP; PCS7 and TIA portal with faceplates ET 200SP ST & HF
Power supply	24 V DC, 19.2 ... 28.8 V
Materials	
• Sensor	
- Wetted parts	316L stainless steel
- Enclosure	304 stainless steel
• Transmitter	Aluminum with corrosion-resistant coating class C4
Enclosure rating	IP67
Pressure ratings	
• Measuring tubes	
- 316L	100 bar (1 450 psi)
- Sensore enclosure	20 bar (DN 15, DN 25) 17 bar (DN 50)
• Sensor enclosure burst pressure	>160 bar (depending on size)
Temperature ratings	
• Process medium	
- DN 15 ... DN 50	-50 ... +200 °C (-58 ... +392 °F)
• Ambient	-40 ... +60 °C (-40 ... +140 °F)[1]
Process connections	
• Flanges	EN 1092-1 B1, EN 1092-1 D, ANSI/ASME B16.5, JIS B 2220, DIN 11864-2
• Pipe threads	ASME B1.20 (NPT), ISO 228-1 G (BSPP), VCO Quick-connect
• Hygienic threads	DIN 11851, DIN 11864-1A, ISO 2853, SMS 1145
• Hygienic clamps	DIN 11864-3A, DIN 32676-C Tri-clamp, ISO 2852
Approvals	
• Hazardous area	FCS400 sensor: ATEX, IECEx, EAC Ex, NEPSI, CSA, cCSA us FCT070: Zone 2 & Class1 Div 2
• Pressure equipment (in preparation)	PED, CRN
• Hygienic	3A, EHEDG
NAMUR	NAMUR-compliant (e.g. NE 21, NE 41, NE 107 and NE 132)
I/O (FCT070)	2 digital Input and 2 digital output
Totalizer (FCT070)	3 totalizer
Communication (FCT070)	Integrated PROFINET for SIMATIC integration and other PROFINET Controllers
EMC performance	
• Emission	EN 55011/CISPR-11 (Class A)
• Immunity	EN/IEC 61326-1 (Industry)
Mechanical load	18 ... 400 Hz random The flow meter will mechanically tolerate 3.17 g RMS in all directions. Flow accuracy cannot be guaranteed under all conditions.

[1] operating outdoors, avoid direct sunlight, paritcularly in warm climatic regions.

© Siemens 2020

Selection and ordering data

	Article No. 7ME4617-												Ord. code
SITRANS FC430 digital coriolis flowmeter with SITRANS FCS400 standard flow sensor for integration with FCT070 transmitter ↗	■	■	■	■	■	-	■	■	■	■		■	■ ■
↗ Click on the Article No. for the online configuration in the PIA Life Cycle Portal.													
Sensor size, connector size													
DN 15, DN 6 (½", ¼")	3	E											
DN 15, DN 10 (½", 3/8")	3	F											
DN 15, DN 15 (½", ½")	3	G											
DN 15, DN 20 (½", ¾")	3	H											
DN 15, DN 25 (½", 1")	3	J											
DN 25, DN 25 (1", 1")	3	L											
DN 25, DN 32 (1", 1¼")	3	M											
DN 25, DN 40 (1", 1½")	3	N											
DN 50, DN 40 (2", 1½")	4	B											
DN 50, DN 50 (2", 2")	4	C											
DN 50, DN 65 (2", 2½")	4	D											
Process connection													
EN 1092-1 B1, PN 16			A	0									
EN 1092-1 B1, PN 40			A	1									
EN 1092-1 B1, PN 63			A	2									
EN 1092-1 B1, PN 100			A	3									
EN 1092-1 D, PN 40			A	5									
EN 1092-1 D, PN 63			A	6									
EN 1092-1 D, PN 100			A	7									
EN 1092-1 D, PN 160 (max operation pressure 100 bar)			A	8									
ASME B16.5 RF, class 150			D	1									
ASME B16.5 RF, class 300			D	2									
ASME B16.5 RF, class 600			D	3									
ASME B16.5 RF, class 900 (p- and t-rating as class 600)			D	4									
ISO 228-1G female pipe thread			E	1									
ASME B1.20.1 NPT female pipe thread			E	3									
DIN 11851 hygienic screwed			F	1									
DIN 32676, ASME, Form C (inch) (tri-clamp)			G	1									
DIN 11864-1 GS Form A Row A, Form A = O-ring type hygienic, aseptic thread connector, hygienic class H3			H	1									
DIN 11864-2 BF Form A Row A, Form A = O-ring type hygienic, aseptic flange connector, hygienic class H3			H	2									
DIN 11864-3 BKS Form A Row A, Form A = O-ring type hygienic, aseptic clamp connector, hygienic class H3			H	3									
ISO 2852 hygienic clamp			J	1									
ISO 2853 hygienic thread			J	2									
SMS 1145 hygienic screwed			K	1									
Quick connect			K	5									
JIS B2220/10K			L	2									
JIS B2220/20K			L	4									
JIS B2220/40K			L	6									
JIS B2220/63K			L	7									

	Article No. 7ME4617-												Ord. code
SITRANS FC430 digital coriolis flowmeter with SITRANS FCS400 standard flow sensor for integration with FCT070 transmitter	■	■	■	■	■	-	■	■	■	■		■	■ ■
Wetted parts material													
AISI 316L/1.4435/1.4404				1									
AISI 316L/1.4435/1.4404 (polished; EHEDG; 3A) (in preparation)				2									
Calibration/Accuracy class													
0.1 % flow, 5 kg/m³ density						1							
0.1 % flow, 0.5 kg/m³ density						4							
Mounting style, transmitter housing and material													
Compact, IP67 fieldmount, aluminum								D					
Ex approval (depending on variant)													
Non-Ex									A				
ATEX (zone 1 / zone 21)									C				
IECEx (zone 1 / zone 21)									F				
US (cCSAus), Div 1									L				
Canada (cCSAus), zone 1									M				
NEPSI									N				
INMETRO (in preparation)									P				
KCC (in preparation)									Q				
EAC									U				
Local User Interface													
Blind										1			

Selection and ordering data

	Order code
Further designs	
Please add "**-Z**" to Article No. and specify Order code(s).	
Cable glands	
Metric, no glands	**A01**
Metric, plastic	**A02**
Metric, brass/Ni plated	**A05**
Metric, stainless steel	**A06**
NPT, no glands	**A11**
NPT, plastic	**A12**
NPT, brass/Ni plated	**A15**
NPT, stainless steel	**A16**
Metric thread with M12 socket fitted	**A20**
Sofware functions and CT approvals	
Standard software DSL	**B10**
I/O configuration Ch1	
No output channel (integration of FCT070)	**E00**
I/O configuration Ch2, Ch3 and Ch4	
None	**F00**

© Siemens 2020

Selection and ordering data

	Order code
Add-on options and accessories	
Please add "**-Z**" to Article No. and specify Order code(s).	
Certificates	
Pressure testing certificate CRN	**C01**
Pressure testing certificate PED	**C02**
Material certificate EN 10204-3.1 (wetted parts)	**C05**
Welding inspection certificate	**C07**
Factory certificate EN 10204 2.1	**C10**
Factory certificate EN 10204 2.2	**C11**
Cleaned for oil and grease	**C50**
Customer selected calibration	
Multi-point (5 flows × 2 pass) Flow 10 ... 100 % of Q_{norm}	**Y60**
Multi-point (10 flows × 1 pass) Flow 10 ... 100 % of Q_{norm}	**Y61**
Multi-point calibration (5 flows × 2 pass) Flow 2 ... 20 % of Q_{norm}	**Y69**
Multi-point calibration (5 flows × 2 pass) Flow 5 ... 50 % of Q_{norm}	**Y71**
Multi-point calibration (10 flows × 1 pass) Flow 2 ... 20 % of Q_{norm}	**Y72**
Multi-point calibration (10 flows × 1 pass) Flow 5 – 50 % of Q_{norm}	**Y73**
Cable	
None	**L50**
5 m (16.4 ft), sensor cable, 4 wire, without plugs for terminal connection	**L52**
5 m (16.4 ft), sensor cable, 4 wire, with 1 pc M12 plugs mounted	**L53**
10 m (32.8 ft), sensor cable, 4 wire, without plugs for terminal connection	**L56**
10 m (32.8 ft), sensor cable, 4 wire, with 1 pc M12 plugs mounted	**L57**
25 m (82 ft), sensor cable, 4 wire, without plugs for terminal connection	**L60**
25 m (82 ft), sensor cable, 4 wire, with 1 pc M12 plugs mounted	**L61**
50 m (164 ft), sensor cable, 4 wire, without plugs for terminal connection	**L64**
50 m (164 ft), sensor cable, 4 wire, with 1 pc M12 plugs mounted	**L65**
75 m (246 ft), sensor cable, 4 wire, without plugs for terminal connection	**L68**
75 m (246 ft), sensor cable, 4 wire, with 1 pc M12 plugs mounted	**L69**
Region-specific approvals and certificates	
South Korea (KCC)	**W28**
Additional data	
Please add "**-Z**" to Article No. and specify Order code(s) and plain text.	
Tag name	
Tag name plate, stainless steel	**Y17**

Description	Article No.	
SITRANS FCT070 Transmitter for ET 200SP	**7ME4138-6AA00-0BB1**	
BU20-P12+A0+4B, PU1 BaseUnit plate for ET 200SP	**6ES7193-6BP20-0BB0** **6ES7193-6BP20-0BB1**	
SITRANS I300 Isolating power supply – Ex barrier	**A5E39832532**	

All literature is available to download for free, in a range of languages, at

www.siemens.com/processinstrumentation/documentation

© Siemens 2020

Overview

MASS 2100 DI 1.5 to DI 15 and the FC300 DN4 is suitable for low flow measurement applications of a variety of liquids and gases.

The sensor is designed with a single bended tube in corrosion resistant stainless steel AISI316L or Hastelloy C22 and a solid stainless steel fully welded enclosure to protect the measuring tubes from any harsh environments. For hazardous area applications the MASS 2100 / FC300 DN4 sensor comes in a number of common hazardous area approved variants like ATEX, IECEx, cCSAus, EAC, and NEPSI.

The sensor offers superior performance in terms of flow accuracy, turn-down ratio and density accuracy and delivers true multi-parameter measurements i.e.: mass flow, volume flow, density, temperature and fraction.

With the large variety of process connections and the ability for high pressure solutions up to 1 000 bar, the compact single tube design is especially suitable for high end applications in all industry segments e.g. Automotive, Painting, Chemical, Oil & Gas and F&B. Accurate dosing and mixing down to drops are widely used applications.

The main applications for the MASS 2100 / FC300 DN 4 sensor can be found in:	
Chemical industry	Liquid and gas measurement within Miniplant and R&D, dosing of additives and catalysts
Cosmetic industry	Dosing of essence and fragrances
Pharmaceutical industry	High-speed dosing and coating of pills, filling of ampuls/injectors
Food and beverage industry	Dosing of flavourings, colours and additives, density measurement, inline
	Measurement of liquid or gaseous CO2
Automotive industry	Fuel injection nozzle and pump testing, filling of AC units, engine consumption, paint robots, ABS testbeds

Integration

The SITRANS MASS 2100/FC300 DN4 sensor are suitable for both indoor and outdoor installation and meets the requirements of Protection Class IP67/NEMA 4X. Optionally the sensor can be ordered with hazardous certification to Zone 1 (ATEX, IECEx, cCSAus, EAC Ex, NEPSI).

It is important to ensure that the sensor tubes are always completely filled with homogeneous fluid; otherwise measuring errors may occur. Suitable fluids are clean liquids, pastes, light slurries or gases. Condensing vapours, aerated liquids or slush are not recommended.

The materials in contact with the process medium must be evaluated for corrosion and erosion resistances for long sensor life.

The pressure drop through the sensor is a function of the properties of the fluid and the flow rate. A pressure loss and accuracy calculator can be found on the Siemens Internet site https://www.siemens.com

The preferred flow direction is indicated by an arrow on the sensor. Flow in the direction of the arrow will be measured as positive. The flow direction can be adjusted at the transmitter to compensate for reverse installation.

Shut-off devices

To conduct a system zero adjustment, secure shut-off devices are required in the pipeline.

Where possible, shut-off devices should be installed both upstream and downstream of the flowmeter.

© Siemens 2020

Integration (continued)

Installation guidelines MASS 2100 DI 3 … DI 15 (1/8" … ½")

In order to perform according to given specifications for flow and density accuracy, the sensor must be installed using rigid mounting brackets as shown in the installation examples.

If the liquid is volatile or contains solid particles, vertical mounting is not recommended.

	Liquid	Gas
Horizontal	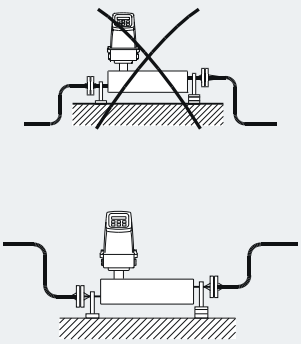	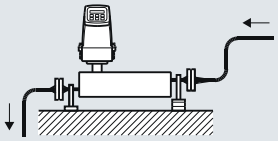
Vertical	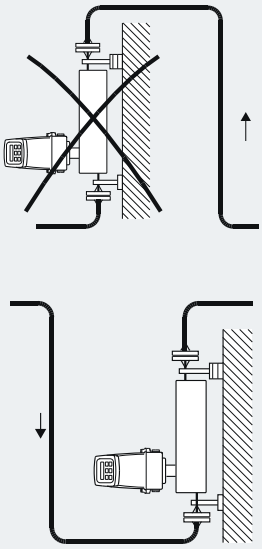	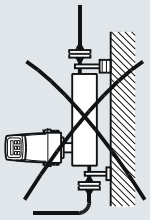

Vibration

Always locate the flowmeter as far away as possible from components that generate mechanical vibration in the piping. Avoid vibration. If necessary use flexible pipes.

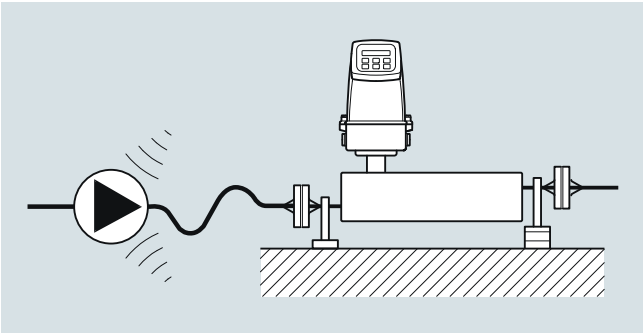

Cross talk

Cross talk between sensors mounted close to each other may disturb the measurement. To avoid cross talk never mount more than one meter on each frame and mount flexible hose connections between the sensors as shown.

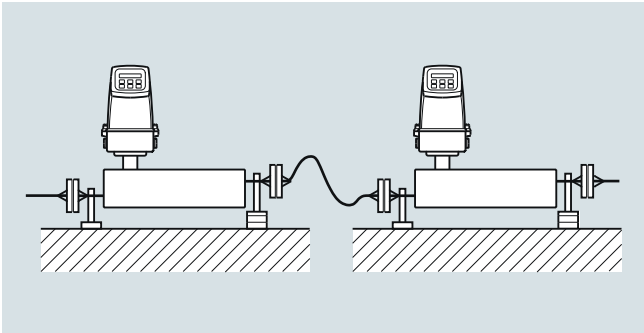

© Siemens 2020

Integration (continued)

Zero point adjustment

To facilitate zero point adjustment a shut-off valve should always be mounted in connection with the sensor as a proper zero point setting is essential for a good accuracy.

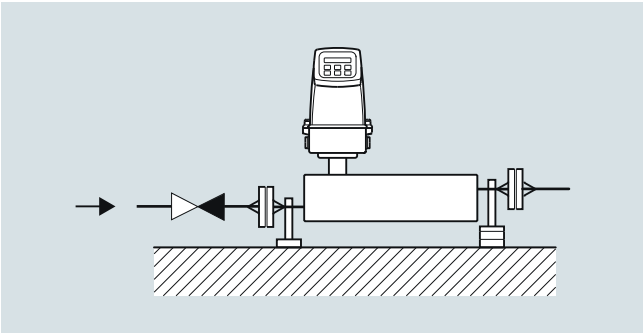

Installation guidelines MASS 2100 DI 1.5 (1/16")

- The optimal installation is horizontal.
  If vertical mounting is necessary, upward flow is recommended to facilitate the removal of air bubbles. To remove the air from the sensor the flow speed in the sensor must be at least 1 m/s.
  If there are solid particles in the liquid, especially in connection with low flow, it is recommended that the sensor be mounted horizontally with inlet flange uppermost so that particles are more easily flushed out. To ensure that the sensor does not become partially empty, there must be sufficient counter-pressure on the unit min. 0.2 bar (2.9 psi).
- Mount the sensor on a vibration-free wall or steel frame.
- Locate the sensor low in the system in order to avoid an underpressure in the sensor separating air/gas in the liquid.
- Ensure that the sensor is not emptied of liquid (during normal operation) otherwise incorrect measurement will occur.

Horizontal

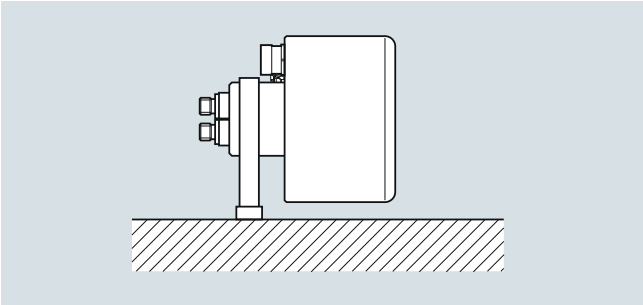

Liquid and gas application

Vertical

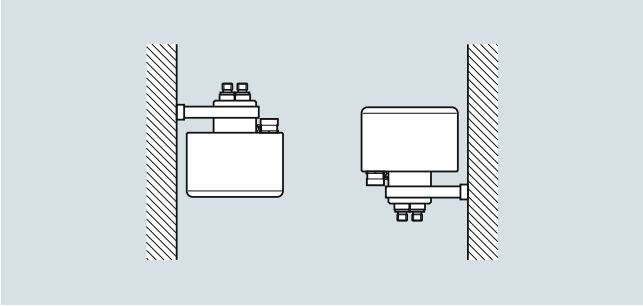

Liquid application (left), gas application (right)

Installation guidelines for SITRANS FC300 sensor

Horizontal installation as shown in figure A is recommended with gas or liquid applications.

This installation is also recommended when the flow velocity is low (< 1 m/s) or the liquid contains solid particles or air bubbles.

Vertical installation as shown in figure B can be used for liquid or gas applications.

For liquid applications upwards flow is recommended to facilitate the removal of air bubbles and to avoid partly emptying of the sensor.

For gas applications we recommend to place the flow inlet on the sensor high and the outlet low to remove impurities and oil films.

- To ensure that the sensor does not become partly empty, there must be a sufficient counter-pressure on the unit min. 0.2 bar (2.9 psi)
- Mount the sensor on a vibration-free and plane wall or steel frame
- Locate the sensor low in the system in order to avoid underpressure in the sensor separating air/gas in the liquid
- Ensure that the sensor is not emptied of liquid (during normal operation) otherwise incorrect measurement will occur

Horizontal mounting (recommended)

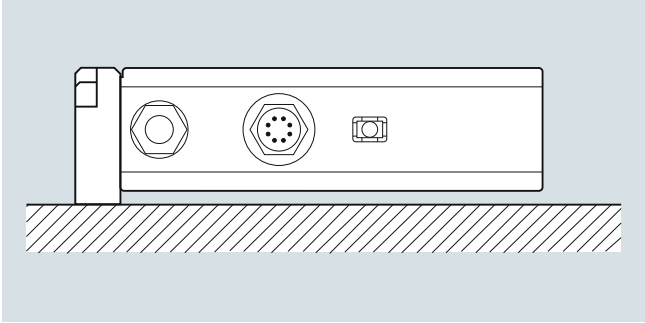

Liquid or gas (low to high flow)

Vertical mounting

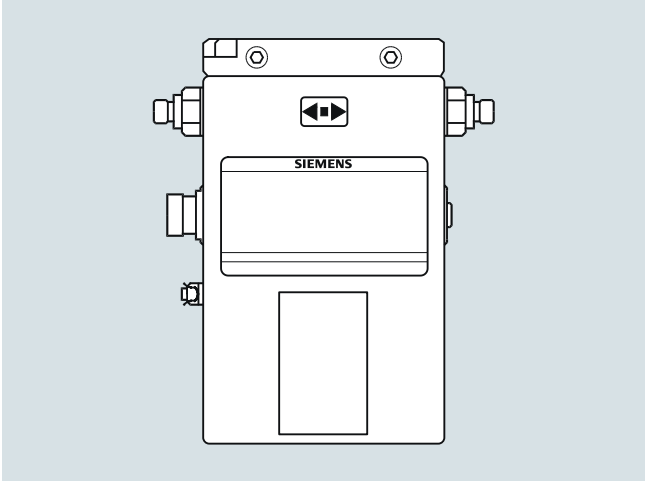

Liquid or gas (medium to high flow)

© Siemens 2020

Technical specifications

Versions dimensions		**DI 1.5 (1/16)**	**DI 3 (1/8)**	**DI 6 (¼)**	**DI 15 (5/8)**	**FC300 DN 4**
Inside pipe diameter (sensor consists of one continuous pipe)	mm (inch)	1.5 (0.06)	3.0 (0.12)	6.0 (0.24)	14.0 (0.55)	SS: 3.5 (0.14) Hast. 3.0 (0.12)
Pipe wall thickness	mm (inch)	0.25 (0.01)	0.5 (0.02)	1.0 (0.04)	1.0 (0.04)	SS: 0.25 (0.0098) Hast. 0.5 (0.0196)
Mass flow measuring range (liquids)	kg/h (lb/h)	0 ... 30 (0 ... 66)	0 … 250 (0 … 550)	0 … 1 000 (0 … 2 200)	0 … 5 600 (0 … 12 345)	0 ... 350 (0 ... 772)
Density (for liquids)	g/cm^3 (lb/inch^3)	0 … 2.9 (0 … 0.10)	0 … 2.9 (0 … 0.10)	0 … 2.9 (0 … 0.10)	0 … 2.9 (0 … 0.10)	0 … 2.9 (0 … 0.10)
Fraction e.g.	°Brix	0 … 100	0 ... 70 (applicable temperature range: 10 ... 99 °C (50 ... 210.2 °F))	0 ... 70 (applicable temperature range: 10 ... 99 °C (50 ... 210.2 °F))	0 ... 70 (applicable temperature range: 10 ... 99 °C (50 ... 210.2 °F))	0 … 100
Temperature						
Media temperature	°C (°F)	-50 … +180 °C (-58 … +356 °F)	-50 … +180 °C (-58 … +356 °F)	-50 … +180 °C (-58 … +356 °F)	-50 … +180 °C (-58 … +356 °F)	-40 ... 115 (40 ... 239) -40 ... 180 (40 ... 356)
Ambient temperature	°C (°F)	-20 … +50 °C (-4 … +122 °F)	-20 … +50 °C (-4 … +122 °F)	-20 … +50 °C (-4 … +122 °F)	-20 … +50 °C (-4 … +122 °F)	-20 … +50 °C (-4 … +122 °F)
Liquid pressure measuring pipe[1]						
Stainless steel	bar (psi)	230 (3 336)	230 (3 336)	265 (3 844)	130 (1 885)	130 (1 885)
Hastelloy C22/2.4602	bar (psi)	365 (5 294)	350 (5 076)	410 (5 946)	200 (2 900)	410 (5 945)
Materials						
Measuring pipe, flange and thread connection		Stainless steel AISI 316L/1.4435 Hastelloy C22/2.4602				
Enclosure and enclosure material		IP67 (NEMA 4) and stainless steel AISI 326L/1.4404 **The housing is not rated for pressure containment**				
Process connections[2]						
Flange						
• DIN 1092-1, PN 40				DN 10	DN 15	
• ANSI B16.5, Class 150				½"	½"	
• ANSI B16.5, Class 600 (Class 300)				½"	½"	
Dairy (screwed connection, PN 16/25/40)[3]						
• DIN 11851				DN 10	DN 15	
• ISO 2853/BS 4825 part 4 (SS3351)				25 mm	25 mm	
Dairy clamp connection (PN 16)[3]						
• ISO 2853/BS 4825 part 3 (SS3016)				25 mm	25 mm	
Thread						
• ISO 228/1, PN 100		G¼" male	G¼" female	G¼" male	G½" male	G¼" male
• ANSI/ASME B1.20.1, PN 100		¼" NPT male	¼" NPT female	¼" NPT male	½" NPT male	¼" NPT male
Ex-version (sensor)						
• ATEX, IECEX, EAC Ex		Zone 0: Ex ia IIC T3...T6 Ga				
• UL (c-UL-us)		Class I, Div. 1: Grp. A, B, C, D				
• cCSAus		Class 1 Div 1 or Class 1 Zone1				

1) Max. at 20 °C (68 °F), DIN 2413, DIN 17457
2) Other connections to order, see "Selection and Ordering data"
3) Material, AISI 316/1.4401 or corresponding

For accuracy specification see "System information SITRANS FC".

© Siemens 2020

Technical specifications (continued)

Pressure drop MASS 2100

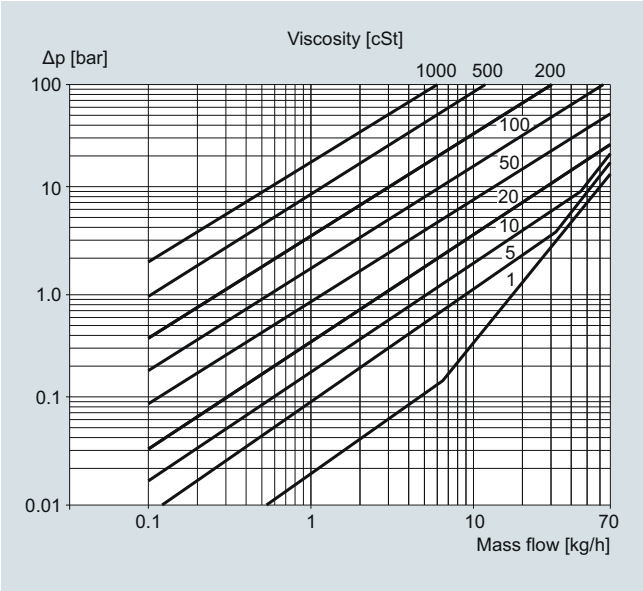

MASS 2100 DI 1.5 (1/16"), pressure drop for density = 1 000 kg/m^3

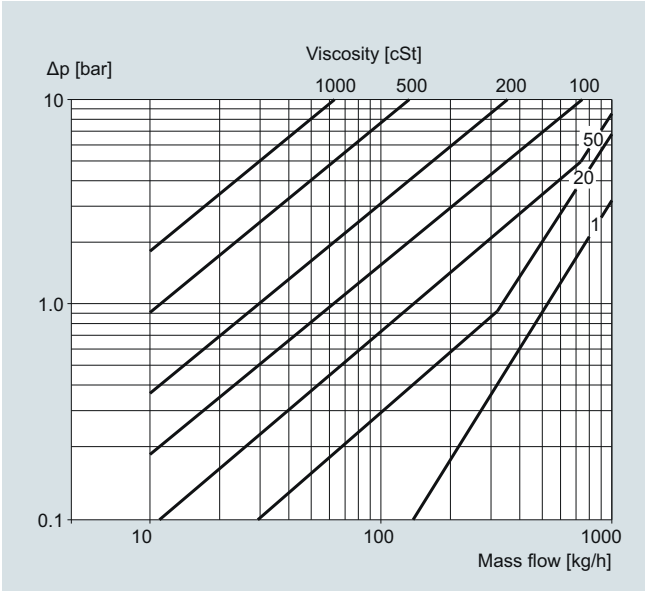

MASS 2100 DI 6 (¼"), pressure drop for density = 1 000 kg/m^3

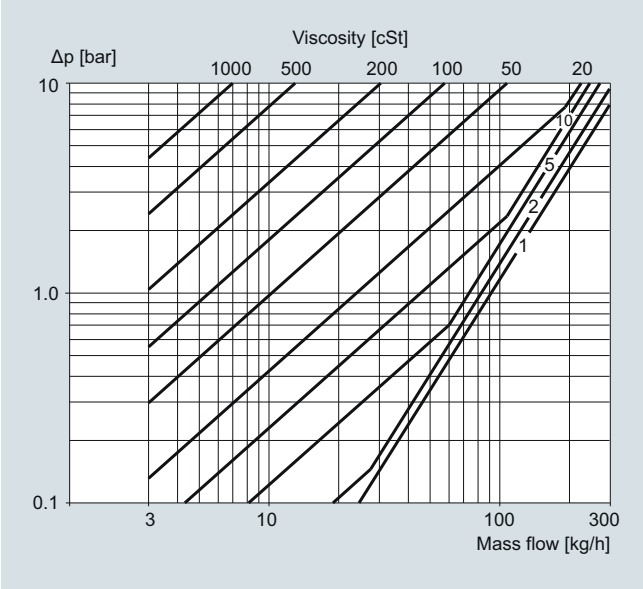

MASS 2100 DI 3 (1/8"), pressure drop for density = 1 000 kg/m^3

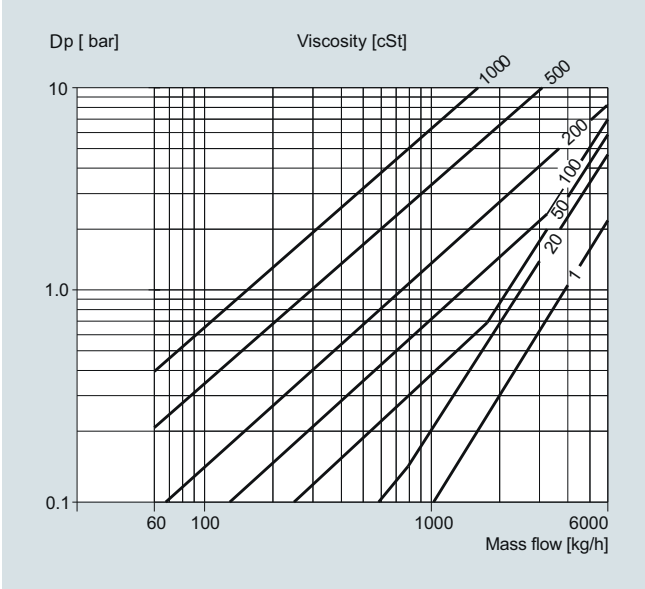

MASS 2100 DI 15 (½"), pressure drop for density = 101 500 kg/m^3

© Siemens 2020

Technical specifications (continued)

Pressure drop FC300 DN4

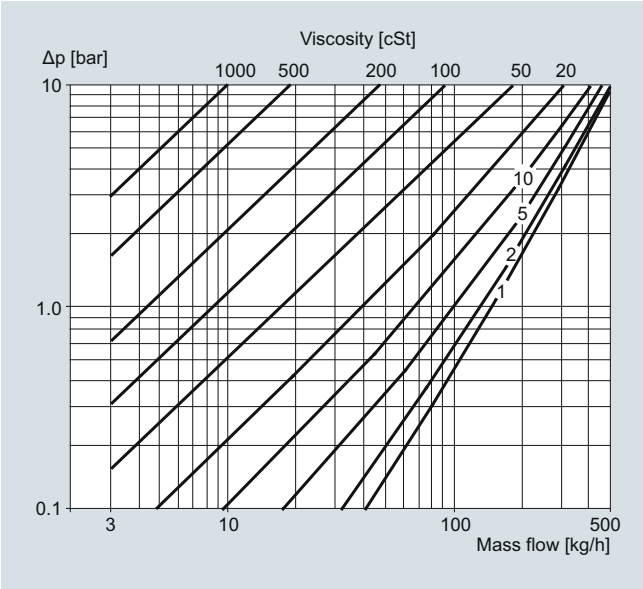

Stainless steel 316L/1.4404

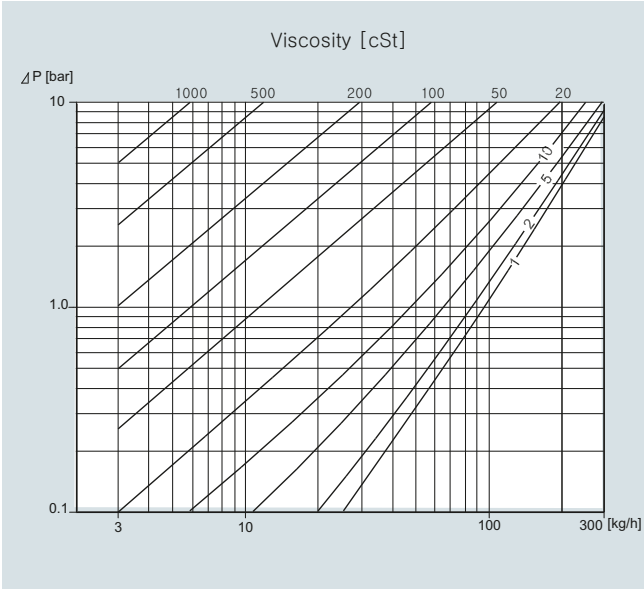

SITRANS FC300 DN 4, pressure loss, viscosity and flow rate for Hastelloy C22 / 2.4602

Pressure/temperature curves MASS 2100 DI 3 ... 15

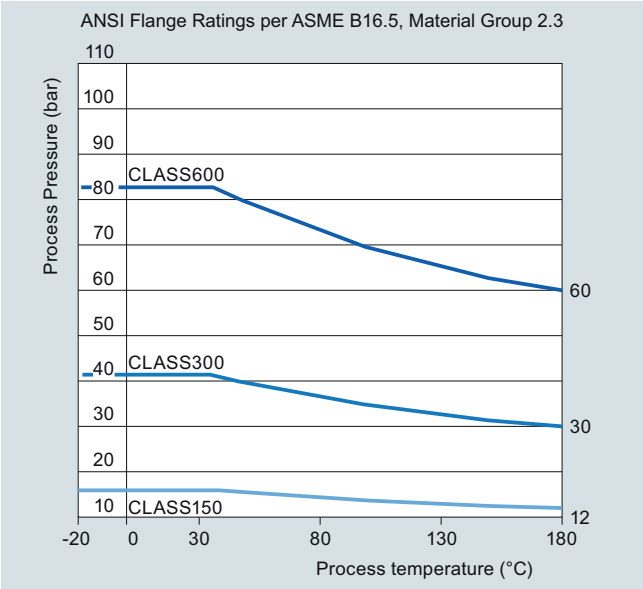

ASME flanges B16.5 stainless steel

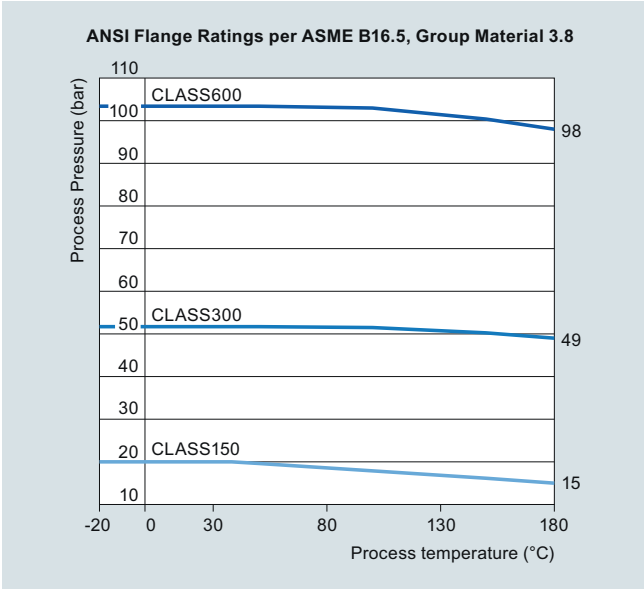

ASME flanges B16.5 Hastelloy C22/2.4602

© Siemens 2020

Technical specifications (continued)

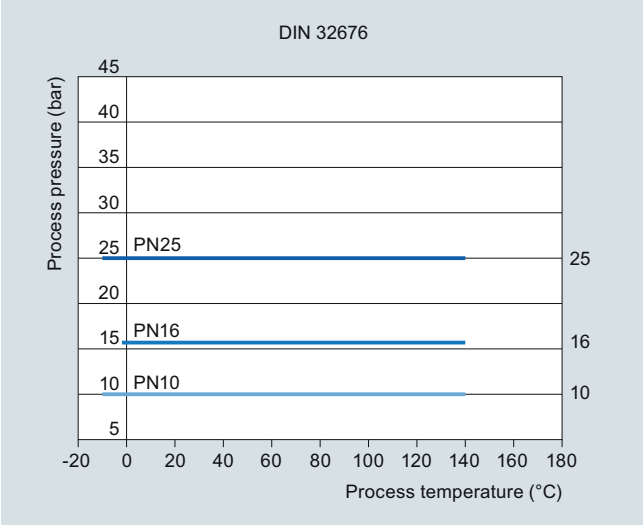

DIN 32676 flanges stainless steel (PN 10 ... PN 25)

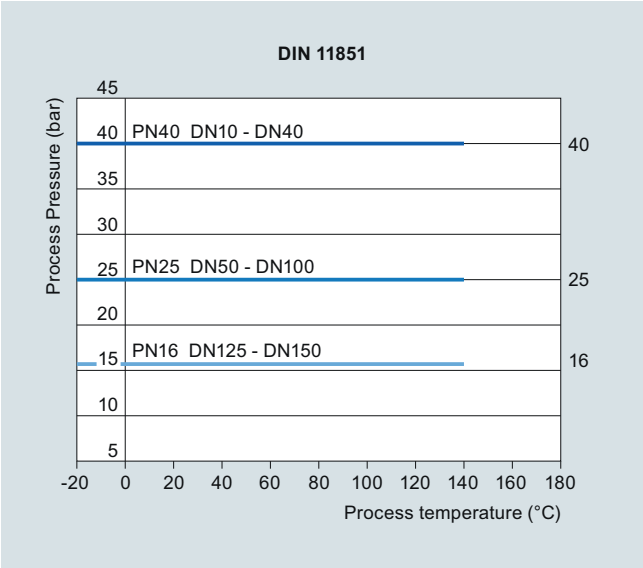

DIN 11581 flanges stainless steel (PN 25 ... PN 40)

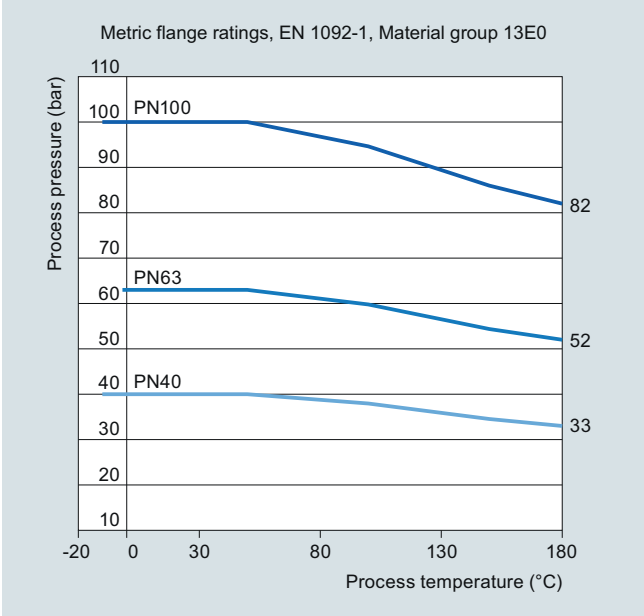

EN 1092 flanges stainless steel (PN 40 ... PN 100)

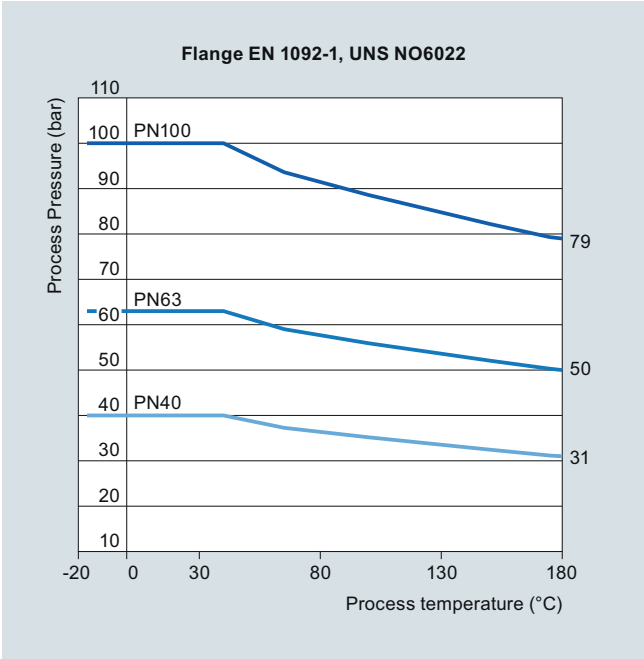

EN 1092 flanges Hastelloy C22/2.4602 (PN 40 ... PN 100)

© Siemens 2020

Technical specifications (continued)

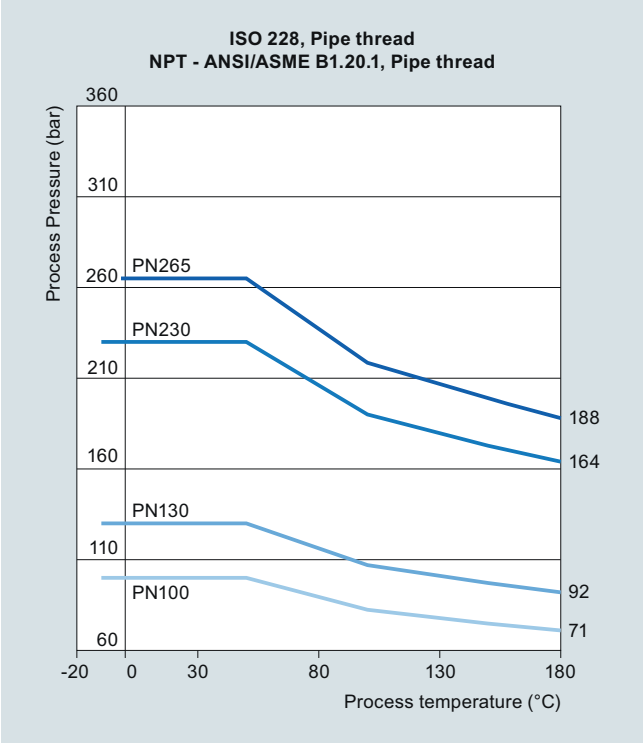

ISO 228 and NPT pipe thread stainless steel (PN 100 ... PN 265)

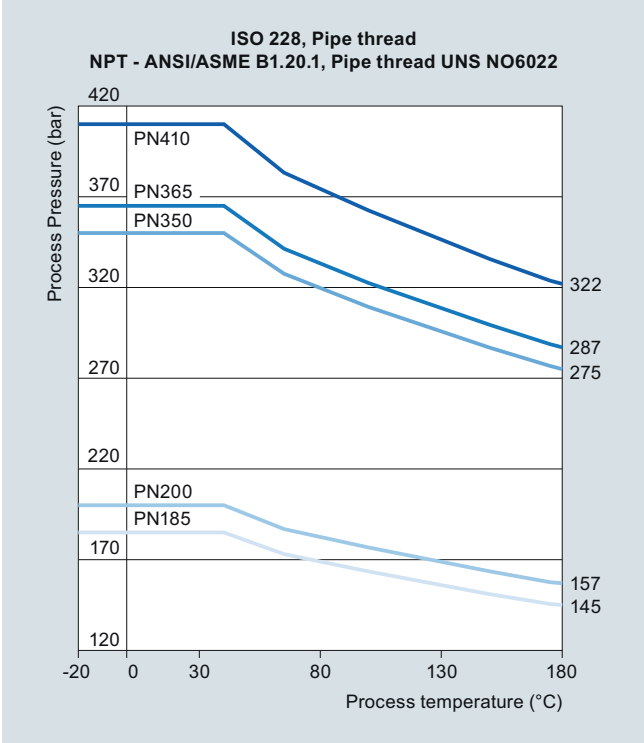

ISO 218 and NPT pipe thread stainless steel (PN 185 ... PN 410)

For further information on the PED standard and requirements, see the pressure equipment directives 2014/68/EU.

© Siemens 2020

Dimensional drawings

MASS 2100 DI 1.5 (1/16")

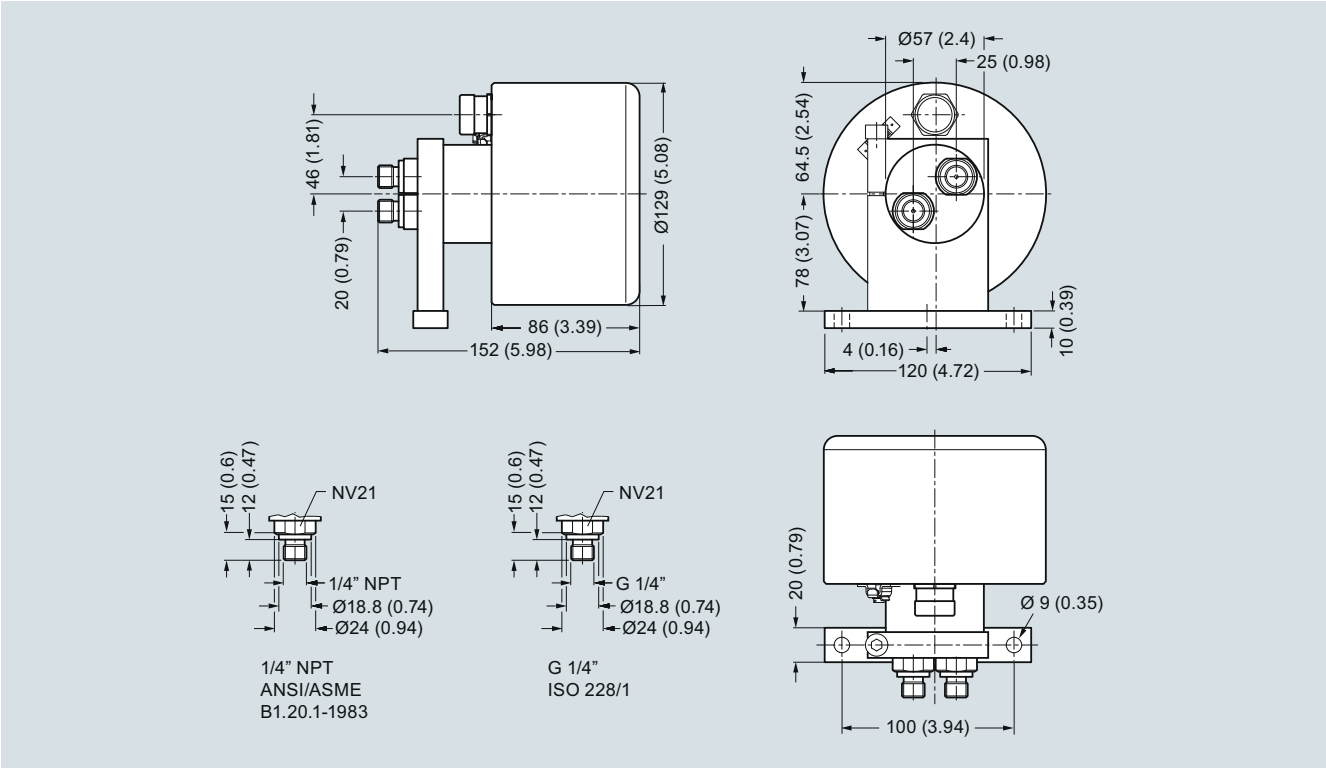

Dimensions in mm (inch)

MASS 2100 DI 1.5 High-temperature version to 180 °C (356 °F)

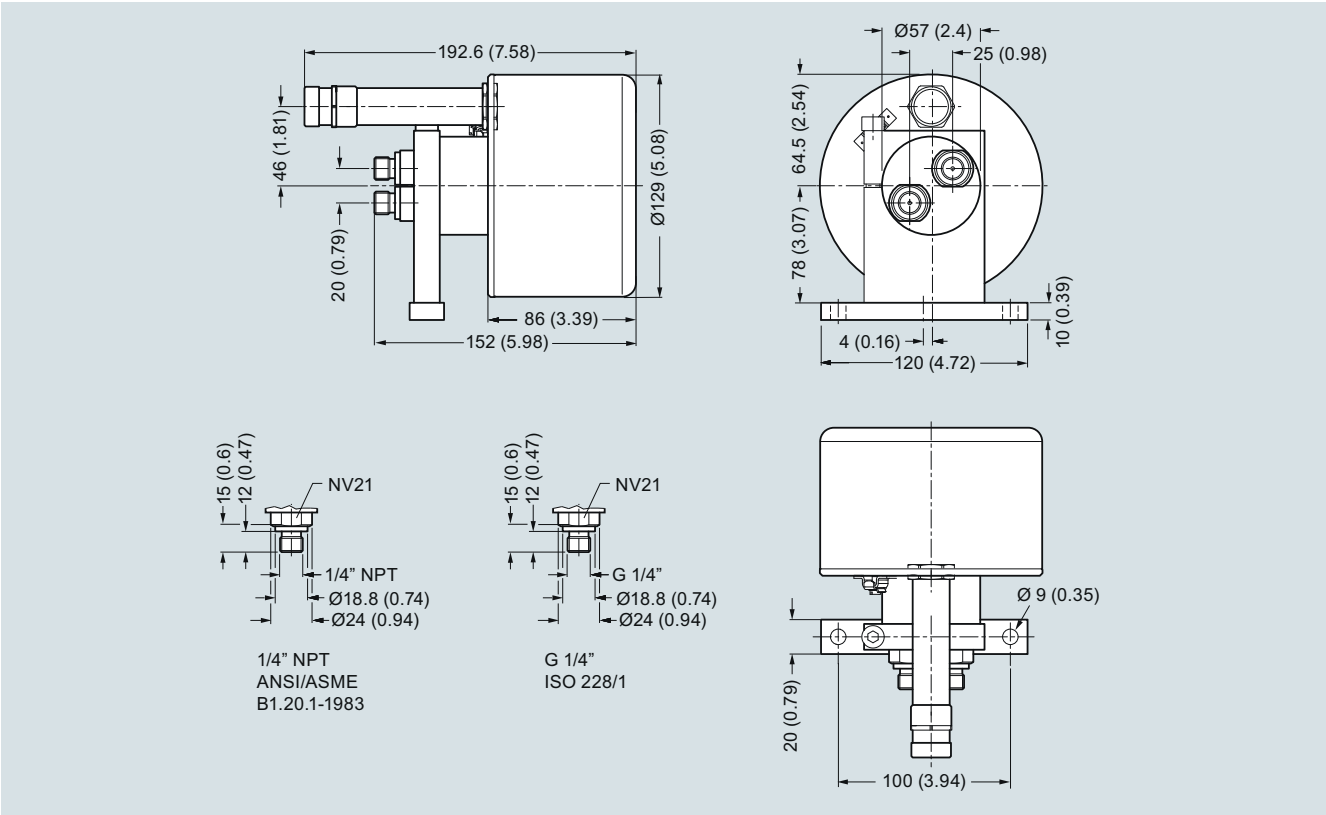

Dimensions in mm (inch)

© Siemens 2020

Dimensional drawings (continued)

SITRANS FC300 DN 4

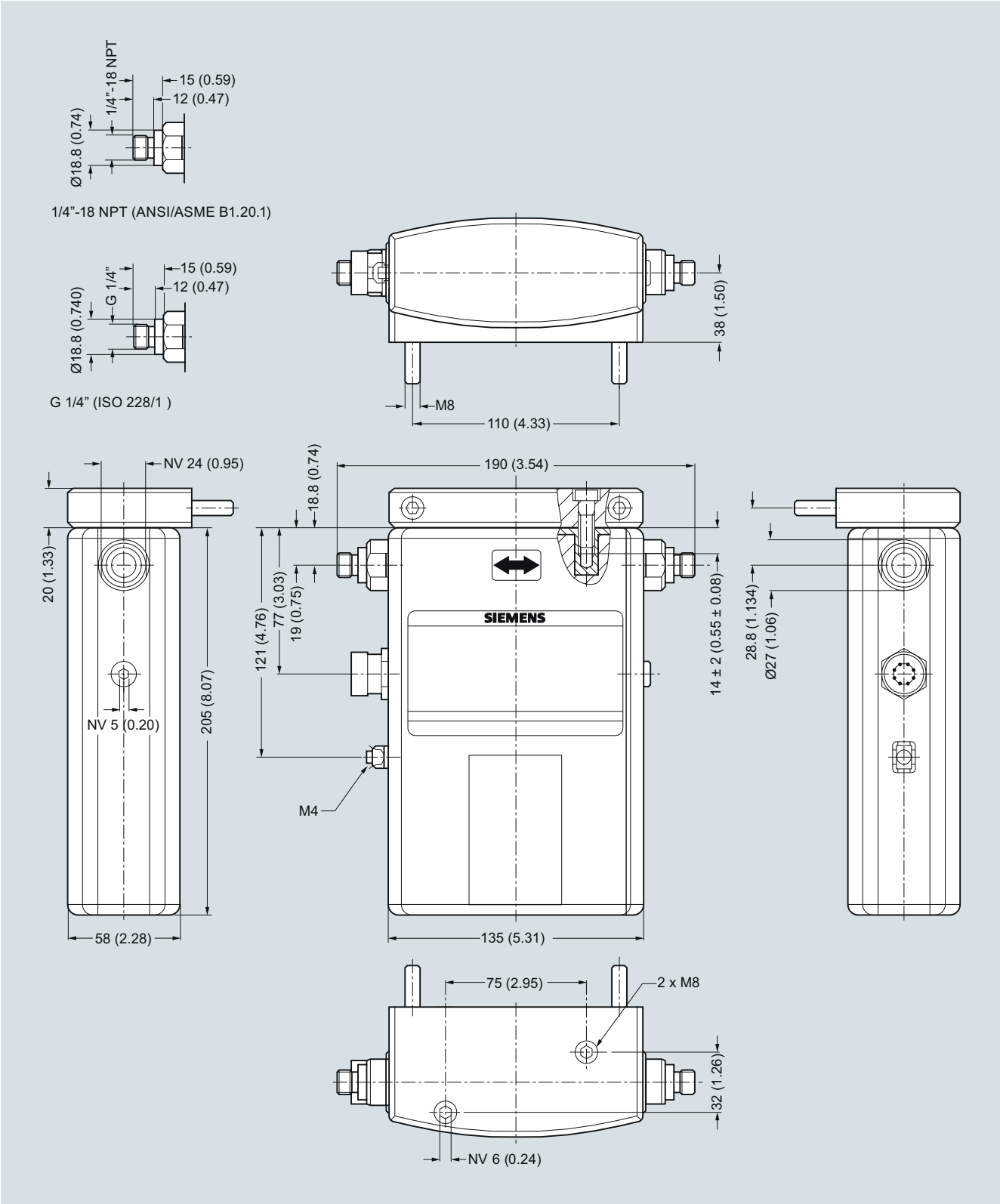

SITRANS FC300, weight 3.5 kg (7.7 lb), dimensions in mm (inch)

© Siemens 2020

Dimensional drawings (continued)

MASS 2100 sensor for analog cable connection

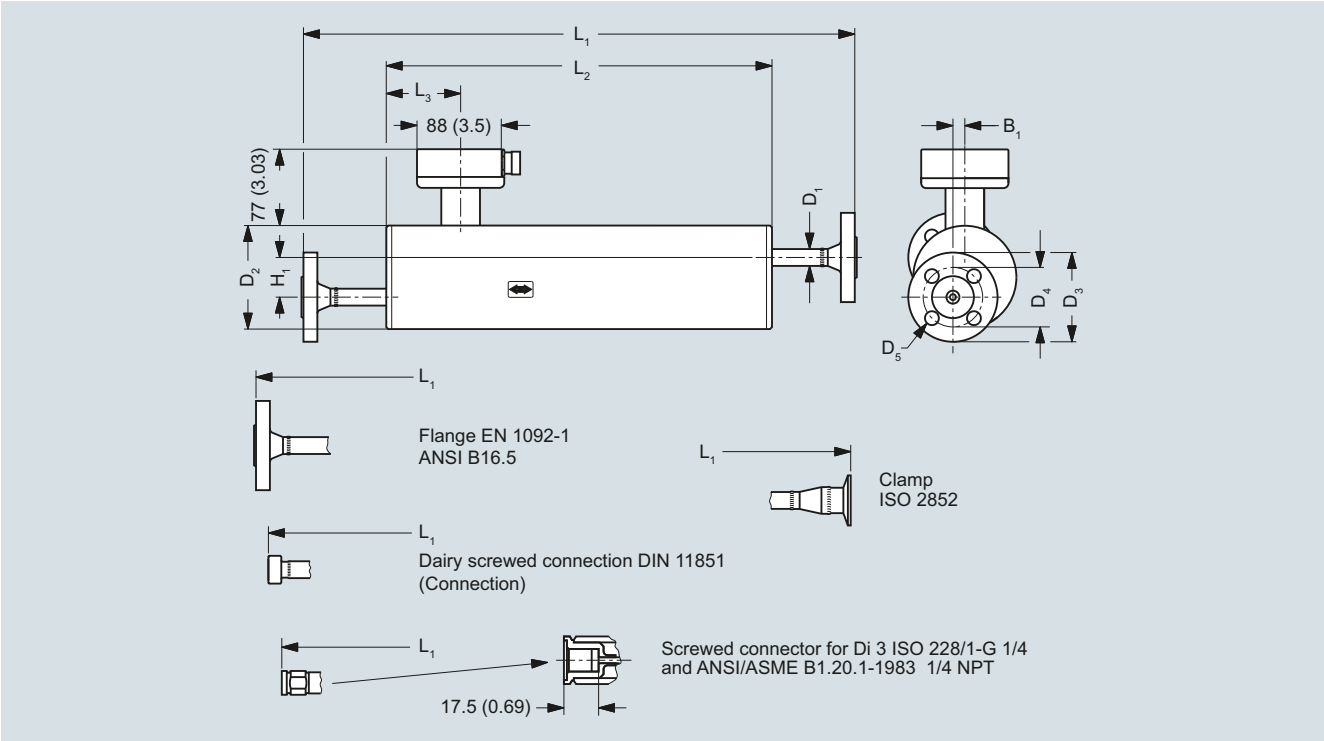

Dimensions in mm (inch)

Sensor size	Connections			L1	L2	L3	H1	B1	D1	D2	D3	D4	D5
DI (inch)	**Type**	**Pressure rating**	**Size**	**mm (inch)**									
DI 3 (1/8)	Pipe thread ISO 228/1 - G¼ (female)	PN 100	¼"	470 (18.50)	280 (11.02)	75.5 (2.97)	60 (2.36)	0	21.3 (0.84)	104 (4.09)	-	-	-
		PN 230	¼"	470 (18.50)	280 (11.02)	75.5 (2.97)	60 (2.36)	0	21.3 (0.84)	104 (4.09)	-	-	-
		PN 350	¼"	470 (18.50)	280 (11.02)	75.5 (2.97)	60 (2.36)	0	21.3 (0.84)	104 (4.09)	-	-	-
	Pipe thread ANSI/ASME B 1.20.1 - ¼" NPT (female)	PN 100	¼"	470 (18.50)	280 (11.02)	75.5 (2.97)	60 (2.36)	0	21.3 (0.84)	104 (4.09)	-	-	-
		PN 230	¼"	470 (18.50)	280 (11.02)	75.5 (2.97)	60 (2.36)	0	21.3 (0.84)	104 (4.09)	-	-	-
		PN 350	¼"	470 (18.50)	280 (11.02)	75.5 (2.97)	60 (2.36)	0	21.3 (0.84)	104 (4.09)	-	-	-

© Siemens 2020

Dimensional drawings (continued)

Sensor size	Connections			L1	L2	L3	H1	B1	D1	D2	D3	D4	D5
DI (inch)	**Type**	**Pressure rating**	**Size**	**mm (inch)**									
DI 6 (¼)	Pipe thread ISO 228/1 - G¼ (male)	PN 100	¼"	564 (22.20)	390 (15.35)	62 (2.44)	40 (1.57)	12 (0.47)	17 (0.67)	104 (4.09)	-	-	-
		PN 265	¼"	564 (22.20)	390 (15.35)	62 (2.44)	40 (1.57)	12 (0.47)	17 (0.67)	104 (4.09)	-	-	-
		PN 410	¼"	564 (22.20)	390 (15.35)	62 (2.44)	40 (1.57)	12 (0.47)	17 (0.67)	104 (4.09)	-	-	-
	Pipe thread ANSI/ASME B 1.20.1 - ¼" NPT (male)	PN 100	¼"	564 (22.20)	390 (15.35)	62 (2.44)	40 (1.57)	12 (0.47)	17 (0.67)	104 (4.09)	-	-	-
		PN 265	¼"	564 (22.20)	390 (15.35)	62 (2.44)	40 (1.57)	12 (0.47)	17 (0.67)	104 (4.09)	-	-	-
		PN 410	¼"	564 (22.20)	390 (15.35)	62 (2.44)	40 (1.57)	12 (0.47)	17 (0.67)	104 (4.09)	-	-	-
	Flange EN 1092-1	PN 40	DN 10	562 (22.13)	390 (15.35)	62 (2.44)	40 (1.57)	12 (0.47)	17 (0.67)	104 (4.09)	90	60	14
			DN 15	640 (25.20)	390 (15.35)	62 (2.44)	40 (1.57)	12 (0.47)	17 (0.67)	104 (4.09)	90	60	14
		PN 100	DN 10	582 (22.91)	390 (15.35)	62 (2.44)	40 (1.57)	12 (0.47)	17 (0.67)	104 (4.09)	100	70	14
			DN 15	653 (25.71)	390 (15.35)	62 (2.44)	40 (1.57)	12 (0.47)	17 (0.67)	104 (4.09)	100	70	14
	Flange ANSI B16.5	Class 150	½"	627 (24.69)	390 (15.35)	62 (2.44)	40 (1.57)	12 (0.47)	17 (0.67)	104 (4.09)	88.9	60.5	15.7
			¾"	672 (26,46)	390 (15.35)	62 (2.44)	40 (1.57)	12 (0.47)	17 (0.67)	104 (4.09)	88.9	60.5	15.7
		Class 600	½"	610 (24.02)	390 (15.35)	62 (2.44)	40 (1.57)	12 (0.47)	17 (0.67)	104 (4.09)	95.3	66.5	15.7
			¾"	695 (27.36)	390 (15.35)	62 (2.44)	40 (1.57)	12 (0.47)	17 (0.67)	104 (4.09)	95.3	66.5	15.7
	Screwed connection DIN 11851	PN 40	DN 10	534 (21.02)	390 (15.35)	62 (2.44)	40 (1.57)	12 (0.47)	17 (0.67)	104 (4.09)	-	-	-
			DN 15	574 (22.60)	390 (15.35)	62 (2.44)	40 (1.57)	12 (0.47)	17 (0.67)	104 (4.09)	-	-	-
	Clamp ISO 2852	PN 16	25 mm	572 (22.52)	390 (15.35)	62 (2.44)	40 (1.57)	12 (0.47)	17 (0.67)	104 (4.09)	-	-	-
	Hygienic screwed ISO 2853		DN 25	575 (22.64)	390 (15.35)	62 (2.44)	40 (1.57)	12 (0.47)	17 (0.67)	104 (4.09)	-	-	-

© Siemens 2020

Dimensional drawings (continued)

Sensor size	Connections			L1	L2	L3	H1	B1	D1	D2	D3	D4	D5
DI (inch)	**Type**	**Pressure rating**	**Size**	**mm (inch)**									
DN 15 (½)	Pipe thread ISO 228/1 – G½ (male)	PN 100	½"	618 (24.33)	444 (17.48)	75 (2.97)	44 (1.73)	20 (0.79)	21.3 (0.84)	129 (5.08)	-	-	-
		PN 130	½"	618 (24.33)	444 (17.48)	75 (2.97)	44 (1.73)	20 (0.79)	21.3 (0.84)	129 (5.08)	-	-	-
		PN 200	½"	618 (24.33)	444 (17.48)	75 (2.97)	44 (1.73)	20 (0.79)	21.3 (0.84)	129 (5.08)	-	-	-
	Pipe thread ANSI/ASME B 1.20.1 - ½" NPT (male)	PN 100	½"	618 (24.33)	444 (17.48)	75 (2.97)	44 (1.73)	20 (0.79)	21.3 (0.84)	129 (5.08)	-	-	-
		PN 130	½"	618 (24.33)	444 (17.48)	75 (2.97)	44 (1.73)	20 (0.79)	21.3 (0.84)	129 (5.08)	-	-	-
		PN 200	½"	618 (24.33)	444 (17.48)	75 (2.97)	44 (1.73)	20 (0.79)	21.3 (0.84)	129 (5.08)	-	-	-
	Flange EN 1092-1	PN 40	DN 15	622 (24.49)	444 (17.48)	75 (2.97)	44 (1.73)	20 (0.79)	21.3 (0.84)	129 (5.08)	95	65	14
			DN 25	724 (28.50)	444 (17.48)	75 (2.97)	44 (1.73)	20 (0.79)	21.3 (0.84)	129 (5.08)	95	65	14
		PN 100	DN 15	635 (25.00)	444 (17.48)	75 (2.97)	44 (1.73)	20 (0.79)	21.3 (0.84)	129 (5.08)	105	75	14
			DN 25	760 (29.92)	444 (17.48)	75 (2.97)	44 (1.73)	20 (0.79)	21.3 (0.84)	129 (5.08)	105	75	14
	Flange ANSI B16.5	Class 150	½"	641 (25.24)	444 (17.48)	75 (2.97)	44 (1.73)	20 (0.79)	21.3 (0.84)	129 (5.08)	88.9	60.5	15.7
			¾"	719 (25.24)	444 (17.48)	75 (2.97)	44 (1.73)	20 (0.79)	21.3 (0.84)	129 (5.08)	88.9	60.5	15.7
		Class 600	½"	661 (26.02)	444 (17.48)	75 (2.97)	44 (1.73)	20 (0.79)	21.3 (0.84)	129 (5.08)	95.3	66.5	15.7
			¾"	742 (29.21)	444 (17.48)	75 (2.97)	44 (1.73)	20 (0.79)	21.3 (0.84)	129 (5.08)	95.3	66.5	15.7
	Screwed connection DIN 11851	PN 40	DN 15	588 (23.15)	444 (17.48)	75 (2.97)	44 (1.73)	20 (0.79)	21.3 (0.84)	129 (5.08)	-	-	-
			DN 25	674 (26.54)	444 (17.48)	75 (2.97)	44 (1.73)	20 (0.79)	21.3 (0.84)	129 (5.08)	-	-	-
	Clamp ISO 2852	PN 16	DN 25	626 (24.65)	444 (17.48)	75 (2.97)	44 (1.73)	20 (0.79)	21.3 (0.84)	129 (5.08)	-	-	-
	Hygienic screwed ISO 2853		DN 25	629 (24.76)	444 (17.48)	75 (2.97)	44 (1.73)	20 (0.79)	21.3 (0.84)	129 (5.08)	-	-	-

[1] For Hastelloy L1 is 628 mm (24.72 inch)

© Siemens 2020

Dimensional drawings (continued)

Compact with FCT030

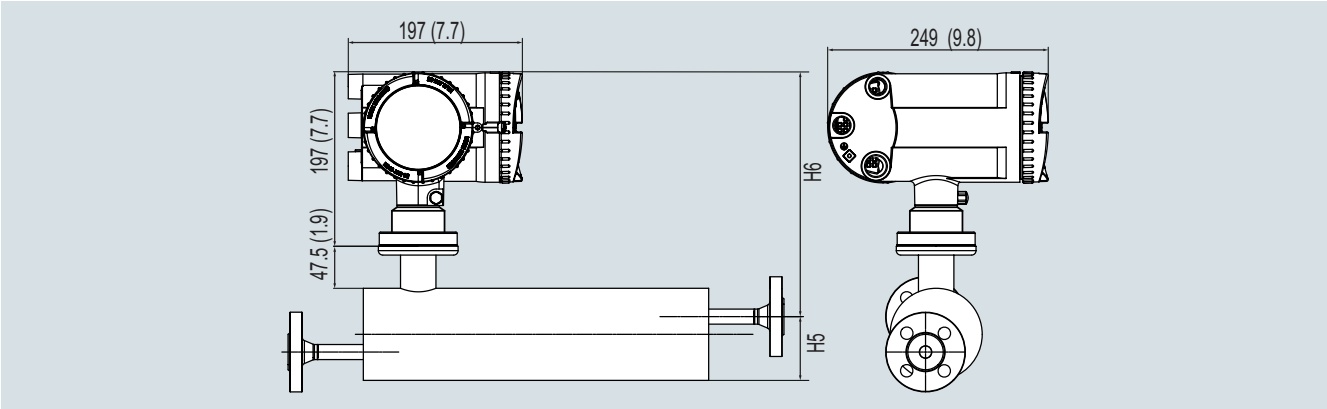

Dimensions in mm (inch)

Transmitter FCT030 remote field mount for M20 analog cable connection

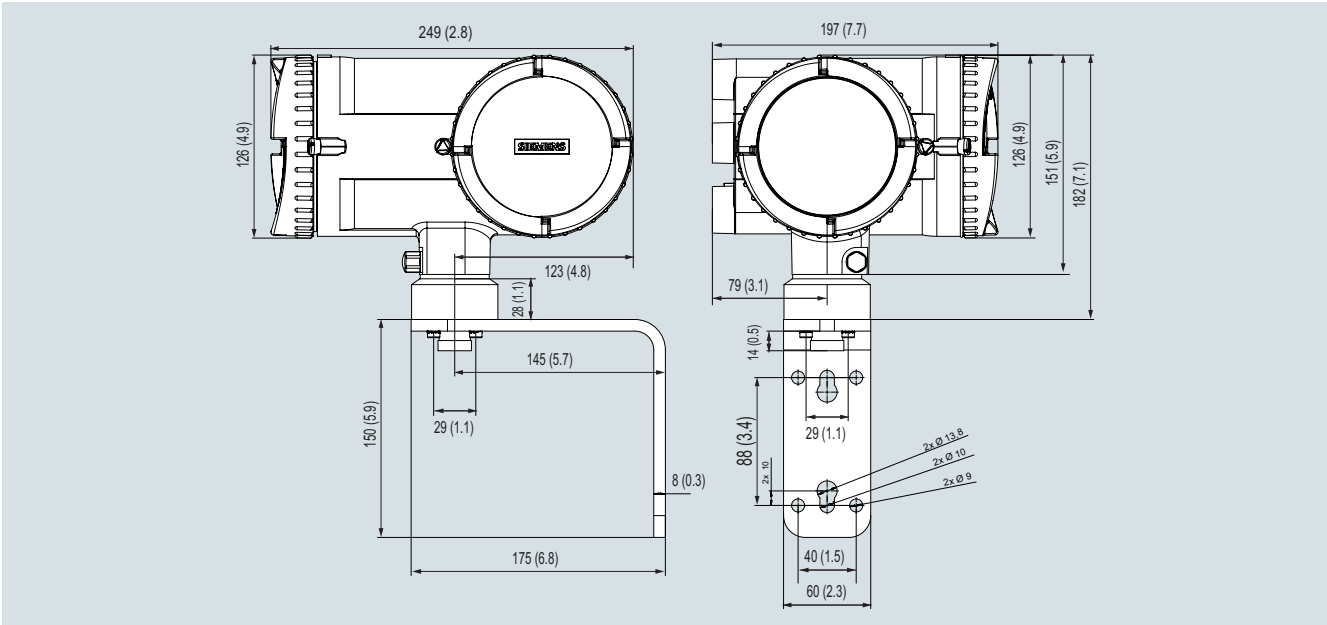

Dimensions in mm (inch)

Compact with FCT010

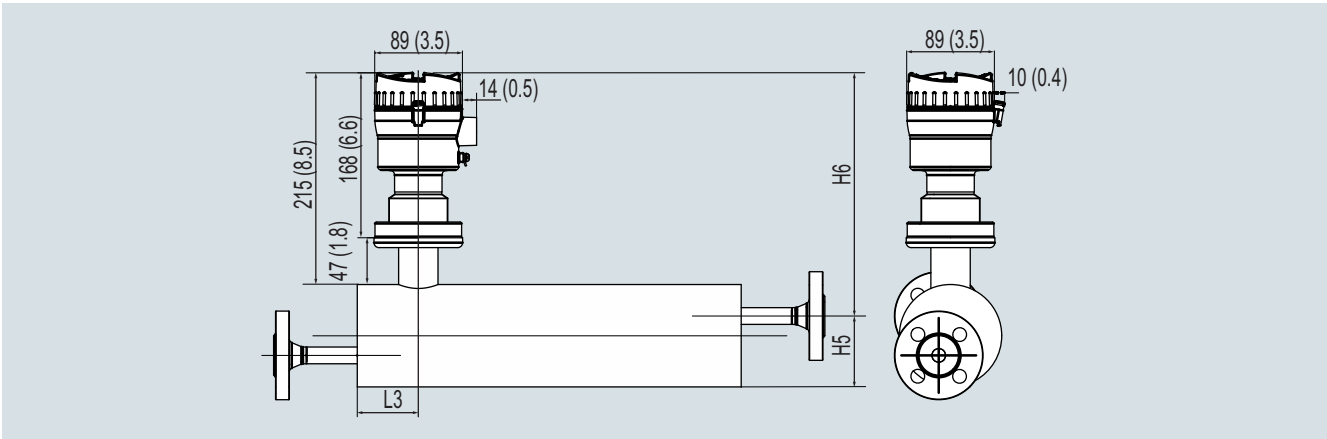

Dimensions in mm (inch)

© Siemens 2020

Dimensional drawings (continued)

MASS 2100 with FCT010 transmitter compact

Sensor size	L_3	H_5	H_6	$H_5 + H_6$
DI (inch)	mm (inch)			
DI 3 (1/8)	75.5 (2.97)	82 (3.23)	237 (9.33)	319 (12.56)
DI 6 (¼)	62 (2.44)	72 (2.83)	247 (9.72)	319 (12.56)
DN 15 (½)	75 (2.97)	86.5 (3.41)	257 (10.11)	343.5 (13.52)

Dimensions for the FCT010 remote mounted (for analogue cable connections for MASS 2100 / FC300 DN4)

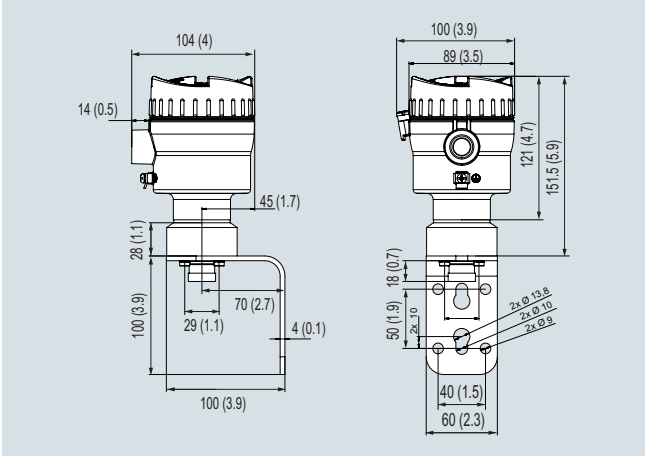

Dimensions in mm (inch)

Transmitter FCT030 remote field mount for M12 digital cable connection

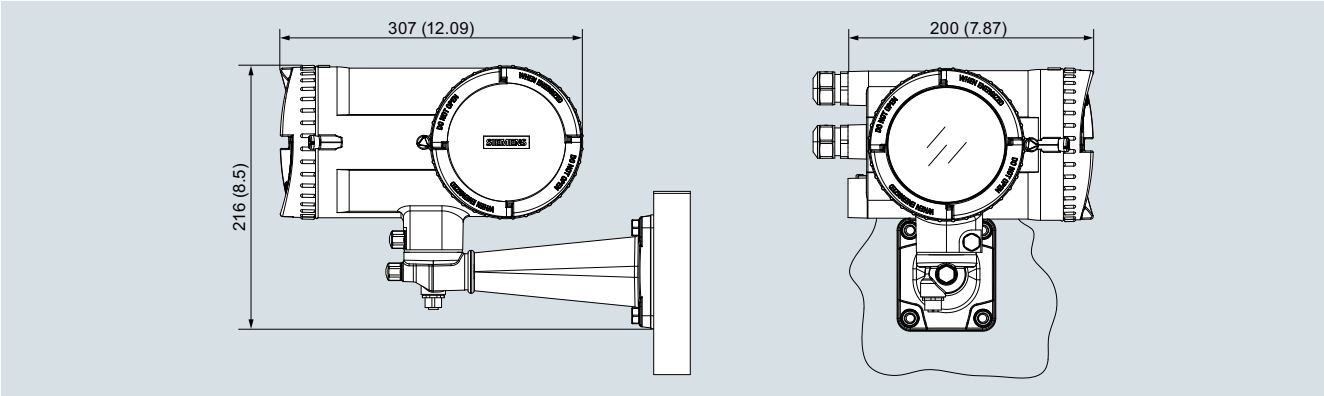

Dimensions in mm (inch)

MASS 2100 sensor with "heating jacket"

Sensor size	Connections heated			L_5	H_3	B_2	D_6	D_7	D_8
DI (inch)	Type	Pressure rating	Size	mm (inch)					
DI 3 (1/8)	EN 1092-1	PN 40	DN 15	234 (9.21)	122 (4.8)	22 (0.87)	95 (3.74)	65 (2.56)	14 (0.55)
	ANSI B16.5	Class 150	½"	234 (9.21)	131.6 (5.18)	22 (0.87)	88.9 (3.5)	60.5 (2.38)	15.7 (0.62)
DI 6 (¼)	EN 1092-1	PN 40	DN 15	234 (9.21)	112 (4.41)	22.7 (0.89)	95 (3.74)	65 (2.56)	65 (2.56)
	ANSI B16.5	Class 150	½"	234 (9.21)	121.6 (4.79)	22.7 (0.89)	88.9 (3.5)	60.5 (2.38)	60.5 (2.38)
DN 15 (½)	EN 1092-1	PN 40	DN 15	234 (9.21)	126.5 (4.98)	31.5 (1.24)	95 (3.74)	65 (2.56)	65 (2.56)
	ANSI B16.5	Class 150	½"	234 (9.21)	136.1 (5.36)	31.5 (1.24)	88.9 (3.5)	60.5 (2.38)	60.5 (2.38)

© Siemens 2020

MASS 2100 / FC300 DN 4 with FCT030 transmitter

Overview

Sensors MASS 2100 and FC300 DN 4 with FCT010 / FCT030 transmitters

The SITRANS MASS 2100 and FC300 DN 4 system consists of a SITRANS sensor and a SITRANS FCT030 transmitter.

The flowmeter comes in a compact and remote design depending for all MASS 2100 DI 3 to DI 15.

MASS 2100 DI 1.5 and FC300 DN4 are only available with analogue connection of the FCT030 transmitter.

The flowmeter is based on the latest developments within digital signal processing technology – engineered for high measuring performance:

- Fast response to rapid changes in flow
- Fast dosing applications
- High immunity against process noise
- High turndown ratio of flowrates
- Suitable for liquid and gas service
- Easy to install, commission and maintain

FCT030 is available with current output HART 7.5, Modbus RS 485 RTU, PROFIBUS DP or PROFIBUS PA as standard on Channel 1. Additional functions can be freely configured for analog, pulse, frequency, relay or status output or binary input.

The transmitter comes with a user-configurable graphical display and SensorFlash, a microSD card for configuration backup, firmware update and data storage.

Benefits

- High accuracy better than 0.1 % of mass flow rate
- Large dynamic turn-down ratio better than 500:1
- Densitometer performance available through density accuracy (depending upon sensor size) ranging from 0.0005 to 0.0015 g/cm^3 with a typical repeatability better than 0.0001 to 0.0002 g/cm^3
- Single continuous tube design, with no internal welds, reductions or flow splitters offers optimal hygiene, safety and CIP cleanability for food and beverage and pharmaceutical applications
- Markets biggest wall thickness, ensuring optimal life-time and corrosion resistance and high-pressure durability
- Balanced pipe design with little mechanical energy-loss, ensures optimal performance and stability under non-ideal and unstable process conditions (pressure, temperature, density-changes etc.)
- Full bore design provides lower pressure loss due to same internal diameter throughout the entire sensor
- 4-wire Pt1000 temperature measurement ensures optimum accuracy on mass flow, density and fraction flow
- Multi-plug electrical connector enables true “plug & play”
- Sensor pipe available in high-quality stainless steel AISI 316L/1.4435 or Hastelloy C22/2.4602 offering optimum corrosion resistance
- Centre-block design decouples process noise from the environment such as vibrations, pulsations, pressure shocks etc. making installation flexible and versatile
- Rugged and space-saving sensor design in stainless steel matching all environments
- High-pressure program as standard

© Siemens 2020

Technical specifications

Sensors MASS 2100 / FC300 DN 4 with FCT030 transmitter	
Sizes mm (inch)	MASS 2100 DI 1.5 (1/16) MASS 2100 DI 3 (1/8") MASS 2100 DI 6 (1/4") MASS 2100 DI 15 (1/2") FC300 DN 4 (1/6")
Accuracy	± 0.10 % for liquids additional ±0.40 for gases
Repeatability	± 0.05 %
Flow range Q norm (liquids)	
(water @ 1 bar pressure loss) (Q_{nom})	
• DI 1.5	19 kg/h (42 lb/h)
• DI 3	90 kg/h (198 lb/h)
• DI 6	500 kg/h (1 102 lb/h)
• DI 15	3 800 kg/h (8 370 lb/h)
• DN 4	140 kg/h (308 lb/h)
Architecture	Compact: DI 3, DI 6, DI 15 Remote digital: DI 3, DI 6, DI 15 Remote analoge: DI 1.5, DI 3, DI 6, DI 15, DN 4
Display	Full graphical display, 240 × 160 pixels with selection of 6 languages
Power supply	20 ... 90 V DC ± 10 %; 100 ... 240 V AC ± 10 %, 47 ... 63 Hz ± 10 %
Material	
• Sensor	
- Wetted parts	316L stainless steel or Hastelly C 22
- Enclosure	316L stainless steel
• Transmitter	Aluminum with corrosion-resistant coating Class C4
Enclosure rating	IP67[1)]
Pressure ratings	
• Measuring tubes	
- 316L	Up to 265 bar (3 844 psi), depending on size and process connection
- Nickel Alloy C4	Up to 410 bar (5 945 psi), depending on size and process connection
• Sensor enclosure	No pressure containment
Temperature ratings	
• Process medium	-50 ... +180 °C (-58 ... +356 °F)
• Ambient	-20 ... +50 °C (-4 ... +122 °F)[1)]

Sensors MASS 2100 / FC300 DN 4 with FCT030 transmitter	
Process connections (depending on size and pressure rating)	
• Flanges	EN 1092-1 B1, ANSI/ASME B16.5
• Pipe threads	ASME B1.20 (NPT), ISO 228
• Hygienic threads	DIN 11851, ISO 2853/BS 4825 part 4 (SS3016)
• Hygienic clamps	ISO Clamp 2852
Approvals	
• Hazardous area	ATEX, IECEx, EAC Ex, CSA, cCSAus, EAC
• Pressure equipment	PED
NAMUR	NAMUR-compliant (e.g. NE 21, NE 41, NE 107 and NE 132)
I/O	Up to 4 channels combining analog, relay or digital outputs and binary input
Communication	HART PROFIBUS PA PROFIBUS DP Modbus RTU (RS 485)
EMC performance	
• Emission	EN 55011/CISPR-11 (Class A)
• Immunity	EN/IEC 61326-1 (Industry)
Mechanical load	18 ... 1 000 Hz random The flow meter will mechanically tolerate 3.17 g RMS in all directions. Flow accuracy cannot be guaranteed under all conditions.

1) If operating outdoors, avoid direct sunlight, particularly in warm climatic regions.

© Siemens 2020

Selection and ordering data

SITRANS FC sensors MASS 2100/FC300 ↗ with FCT030 transmitter	Article No. 7ME4813-	Ord. code
↗ Click on the Article No. for the online configuration in the PIA Life Cycle Portal.		
Sensor type and connector size		
MASS 2100 DI 1.5, 1/4"	1 G	
MASS 2100 DI 3, 1/4"	3 A	
MASS 2100 DI 3, 1/4" Heated w. DIN	3 B	
MASS 2100 DI 3,1/4" Heated w. ANSI	3 C	
FC300 DN 4, 1/4"	4 A	
MASS 2100 DI 6, 1/4"	6 A	
MASS 2100 DI 6,1/4" Heated w. EN	6 B	
MASS 2100 DI 6, 1/4" Heated w. ANSI	6 C	
MASS 2100 DI 6, DN 10	6 D	
MASS 2100 DI 6, DN 10 Heated w. EN	6 E	
MASS 2100 DI 6, DN 10 Heated w. ANSI	6 F	
MASS 2100 DI 6, DN 15 (½")	6 G	
MASS 2100 DI 6, DN 15 (½") Heated w. EN	6 H	
MASS 2100 DI 6, DN 15 (½") Heated w. ANSI	6 J	
MASS 2100 DI 6, DN 20 (¾")	6 K	
MASS 2100 DI 6, DN 20 (¾") Heated w. EN	6 L	
MASS 2100 DI 6, DN 20 (¾") Heated w. ANSI	6 M	
MASS 2100 DI 6, DN 25 (1")	6 N	
MASS 2100 DI 6, DN 25 (1") Heated w. EN	6 P	
MASS 2100 DI 6, DN 25 (1") Heated w. ANSI	6 Q	
MASS 2100 DI 15, DN 15 (½")	7 A	
MASS 2100 DI 15, DN 15 (½") Heated w. EN	7 B	
MASS 2100 DI 15, DN 15 (½") Heated w. ANSI	7 C	
MASS 2100 DI 15, DN 20 (¾")	7 D	
MASS 2100 DI 15, DN 20 (¾") Heated w. EN	7 E	
MASS 2100 DI 15, DN 20 (¾") Heated w. ANSI	7 F	
MASS 2100 DI 15, DN 25 (1")	7 G	
MASS 2100 DI 15, DN 25 (1") Heated w. EN	7 H	
MASS 2100 DI 15, DN 25 (1") Heated w. ANSI	7 J	

SITRANS FC sensors MASS 2100/FC300 with FCT030 transmitter	Article No. 7ME4813-	Ord. code
Process connection/Pressure		
No connections (spare part transmitter)	A 0	
EN 1092-1 B1, PN 40	A 1	
EN 1092-1 B1, PN 100	A 3	
ASME B16.5, RF, Class 150	D 1	
ASME B16.5, RF, Class 600	D 3	
DIN 11851 crewed connection	F 1	
ISO 2852 hygienic clamped	J 1	
ISO 2853 hygienic screwed	J 5	
ISO 228-1 pipe thread, PN 100	C 1	
ISO 228-1 ipe thread, PN 130	C 2	
ISO 228-1 pipe thread, PN 200	C 3	
ISO 228-1 ipe thread, PN 230	C 4	
ISO 228-1 ipe thread, PN 265	C 5	
ISO 228-1 pipe thread, PN 350	C 6	
ISO 228-1 pipe thread, PN 365	C 7	
ISO 228-1 pipe thread, PN 410	C 8	
NPT ASME B 1.20.1 pipe thread, PN 100	N 1	
NPT ASME B 1.20.1 pipe thread, PN 130	N 2	
NPT ASME B 1.20.1 pipe thread, PN 200	N 3	
NPT ASME B 1.20.1 pipe thread, PN 230	N 4	
NPT ASME B 1.20.1 pipe thread, PN 265	N 5	
NPT ASME B 1.20.1 pipe thread, PN 350	N 6	
NPT ASME B 1.20.1 pipe thread, PN 365	N 7	
NPT ASME B 1.20.1 pipe thread, PN 410	N 8	
Tube material (wetted) and max. operational temperature		
AISI 316L/EN 1.4435, max. 115 °C	1	
AISI 316L/EN 1.4435, max. 125 °C	2	
AISI 316L/EN 1.4435, max.180 °C	3	
Hastelloy C22/UNS N06022/EN 2.4602, max. 115 °C	5	
Hastelloy C22/UNS N06022/EN 2.4602, max. 125 °C	6	
Hastelloy C22/UNS N06022/EN 2.4602, max. 180 °C	7	
Calibration		
Mass flow calibration 2 flow x 2 points	1	
Mass flow calibration 2 flow x 2 points + density calibration	4	
Standard fraction (selectable by menu) incl density calibration	8	
Individual fraction (on demand)	9	N 0 Y

© Siemens 2020

Selection and ordering data

	Article No.												Order code
SITRANS FC sensors MASS 2100/FC300 with FCT030 transmitter	**7ME4813-**									Ord. code			
	■	■	■	■	-	■	■	■	■	■	■	■	
Mounting style, transmitter housing and material													
Compact mounted, IP67, Aluminium transmitter housing (DI 3, DI 6 and DI 15)							D						
Remote field mounted, IP67, Aluminium housing, M12 socket for digital cable connection (DI 3, DI6 and DI 15 only)							G						
Remote field mount, IP67, Aluminium housing, terminal box for digital cable connection (DI 3, DI6 and DI 15)							K						
Wall mount aluminum transmitter housing, M12 socket for digital cable connection (DI 3, DI 6 and DI 15)							U						
Remote field mount, IP67, Aluminium transmitter housing, analog cable connection with M20 connectors							Z			P	0	D	
Remote wall mount, IP67, aluminum transmitter housing, analog cable connection with M20 connectors							Z			P	0	E	
Ex approvals													
Non-Ex								A					
ATEX Zone 1 / 21								C					
IECEx Zone 1 / 21 (in preparation)								F					
USA (FM, CSA, UL), Zone 1/Div 1								H					
Canada (CSA, UL), Zone 1/Div 1								M					
EAC Zone 1 / 21								U					
Local User Interface													
Blind									1				
Graphical, 240 × 160 pixels, glass lid									3				

Further designs Please add "**-Z**" to Article No. and specify Order code(s).	Order code
Cable glands	
None (mechanical sensor)	**A00**
Metric, no glands	**A01**
Metric, plastic	**A02**
Metric, brass/Ni plated	**A05**
Metric, stainless steel	**A06**
NPT, no glands	**A11**
NPT, plastic	**A12**
NPT, brass/Ni plated	**A15**
NPT, stainless steel	**A16**
Integral M12 socket	**A20**
SW functions & CT approvals	
Standard	**B11**
I/O configuration Ch1	
None (replacement sensor)	**E00**
4 ... 20 mA, HART, active/passive output (non-Ex)	**E02**
4 ... 20 mA, HART, active Ex	**E06**
4 ... 20 mA, HART, passive Ex	**E07**
PROFIBUS PA	**E10**
PROFIBUS DP	**E11**
Modbus RTU RS 485 (none-Ex)	**E14**
I/O configuration Ch2, Ch3 and Ch4	
None	**F00**
Non Ex: Sig O, None, None	**F01**
Non Ex: Sig O, Sig I/O, None	**F02**
Non Ex: Sig O, Sig I/O, Sig I/O	**F03**
Non Ex: Sig O, Sig I/O, R	**F04**
Non Ex: Sig O, R, R	**F05**
Non Ex: Sig O, R, None	**F06**
Ex: pSig O, None, None	**F11**
Ex: pSig O, pSig I/O, None	**F12**
Ex: pSig O, pSig I/O, pSig I/O	**F13**
Ex: pSig O, pSig I/O, R	**F14**
Ex: pSig O, R, R	**F15**
Ex: pSig O, R, None	**F16**
Ex: aSig O, None, None	**F21**
Ex: aSig O, aSig I/O, None	**F22**
Ex: aSig O, aSig I/O, aSig I/O	**F23**
Ex: aSig O, aSig I/O, R	**F24**
Ex: aSig O, R, R	**F25**
Ex: aSig O, R, None	**F26**

© Siemens 2020

Selection and ordering data

	Order code
Further designs	
Please add "**-Z**" to Article No. and specify Order code(s).	
Certificates	
Press test certificate CRN	**C01**
Press test certificate PED	**C02**
Material certificate EN 10204-3.1	**C12**
Welding inspection report	**C13**
Factory certificate according to EN 10204 2.2	**C14**
Factory certificate according to EN 10204 2.1	**C15**
Cleaning for oil and grease/ASTM-A380	**C50**
Sensor data storage	
Sensor with SensorFlash for FCT	**S20**
Sensor with SensorProm for MASS 6000 (in preparation)	**S21**
SD-Card accessibility via USB	
(not allowed in USA by Patent)	
Mass storage enabled	**S30**
Digital cable sensor-transmitter	
None	**L50**
5 m (16.4 ft), sensor cable, 4 wire, with 2 pcs M12 plugs mounted	**L51**
5 m (16.4 ft), sensor cable, 4 wire, without plugs for terminal connection	**L52**
10 m (32.8 ft) sensor cable, 4 wire, with 2 pcs M12 plugs mounted	**L55**
10 m (32.8 ft), sensor cable, 4 wire, without plugs for terminal connection	**L56**
25 m (82 ft), sensor cable, 4 wire, with 2 pcs M12 plugs mounted	**L59**
25 m (82 ft), sensor cable, 4 wire, without plugs for terminal connection	**L60**
50 m (164 ft), sensor cable, 4 wire, with 2 pcs M12 plugs mounted	**L63**
50 m (164 ft), sensor cable, 4 wire, without plugs for terminal connection	**L64**
75 m (246 ft), sensor cable, 4 wire, with 2 pcs M12 plugs mounted	**L67**
75 m (246 ft), sensor cable, 4 wire, without plugs for terminal connection	**L68**
Analog cable sensor-transmitter	
1 m cable, analog, with 2 × M20 connectors	**L85**
2 m cable, analog with 2 × M20 connectors	**L86**
5 m cable, analog with 2 × M20 connectors	**L87**
10 m cable, analog with 2 × M20 connectors	**L88**
15 m cable, analog with 2 × M20 connectors	**L89**
Additional data	
Please add "**-Z**" to Article No. and specify Order code(s) and plain text.	
Tag name	
Tag name plate, stainless steel	**Y17**
Extended calibration	
Multi-point high, (5 flows × 2 passes), 10 ... 100 % of Q_{nom}	**Y61**
Multi-point high, (10 flows × 1 pass), 10 ... 100 % of Q_{nom}	**Y63**

Accessories for MASS 2100 and FC300 DN 4 with FCT030 transmitter

Description	Article No.	
Mounting bracket for flow sensor MASS 2100 DI 1.5	**A5E02590427**	
Mounting bracket for FC300 DN 4 in AISI 304	**A5E02590439**	

© Siemens 2020

Overview

Sensors MASS 2100 and FC300 DN 4 with FCT010 / FCT030 transmitters

The SITRANS MASS 2100 and FC300 DN 4 system consists of a SITRANS sensor and a SITRANS FCT010 transmitter. The flowmeter comes in a compact design for all MASS 2100 DI 3 to DI 15.

MASS 2100 DI 1.5 to DI 15 and FC300 DN4 are available as remote FCT010 transmitter with analogue connection. Intended for integration into OEM skids, machines or pre-assembled plant systems, the flowmeter is based on the latest developments within digital signal processing technology - engineered for high measuring performance:

- Fast response to rapid changes in flow
- Fast dosing applications with control in host system
- High immunity against process noise
- High turndown ratio of flowrates
- Suitable for liquid and gas service
- Easy to install, commission and maintain

The FCT010 transmitter delivers true multi-parameter measurements i.e. massflow, density, temperature.

FCT010 is available with Modbus RTU (RS 485) multi-drop serial communication.The flowmeter is supplied with SensorFlash, a microSD card containing all relevant certificates.

Benefits

- High accuracy better than 0.1 % of mass flow rate
- Large dynamic turn-down ratio better than 500:1
- Densitometer performance available through density accuracy (depending upon sensor size) ranging from 0.0005 to 0.0015 g/cm^3 with a typical repeatability better than 0.0001 to 0.0002 g/cm^3
- Single continuous tube design, with no internal welds, reductions or flow splitters offers optimal hygiene, safety and CIP cleanability for food and beverage and pharmaceutical applications
- Markets biggest wall thickness, ensuring optimal life-time and corrosion resistance and high-pressure durability
- Balanced pipe design with little mechanical energy-loss, ensures optimal performance and stability under non-ideal and unstable process conditions (pressure, temperature, density-changes etc.)
- Full bore design provides lower pressure loss due to same internal diameter throughout the entire sensor
- 4-wire Pt1000 temperature measurement ensures optimum accuracy on mass flow, density and fraction flow
- Multi-plug electrical connector enables true “plug & play”
- Sensor pipe available in high-quality stainless steel AISI 316L/1.4435 or Hastelloy C22/2.4602 offering optimum corrosion resistance
- Centre-block design decouples process noise from the environment such as vibrations, pulsations, pressure shocks etc. making installation flexible and versatile
- Rugged and space-saving sensor design in stainless steel matching all environments
- High-pressure program as standard

© Siemens 2020

Technical specifications

Sensors MASS 2100 / FC300 DN 4 with FCT010 transmitter	
Sizes mm (inch)	MASS 2100 DI 1.5 (1/16) MASS 2100 DI 3 (1/8") MASS 2100 DI 6 (1/4") MASS 2100 DI 15 (1/2") FC300 DN 4 (1/6")
Accuracy	± 0.10 % for liquids additional ±0.40 for gases
Repeatability	± 0.05 %
Flow range Q norm (liquids)	
(water @ 1 bar pressure loss) (Q_{nom})	
• DI 1,5	19 kg/h (42 lb/h)
• DI 3	90 kg/h (198 lb/h)
• DI 6	500 kg/h (1 102 lb/h)
• DI 15	3 800 kg/h (8 370 lb/h)
• DN 4	140 kg/h (308 lb/h)
Architecture	Compact: DI 3, DI 6, DI 15 Remote analoge: DI 1.5, DI 3, DI 6, DI 15, DN 4
Power supply	12-27 V DC; 1.1 W for Ex d: 12 – 24 V DC; Intrinsic safety power supply: Ui: 20 V, Ii: 484 mA, Pi: 2.3 W, Li: 0.6 uH, Ci: 1.9 nF.
Material	
• Sensor	
- Wetted parts	316L stainless steel or Hastelly C 22
- Enclosure	316L stainless steel
• Transmitter	Aluminum with corrosion-resistant coating Class C4
Enclosure rating	IP67[1)]
Pressure ratings	
• Measuring tubes	
- 316L	Up to 265 bar (3 844 psi), depending on size and process connection
- Nickel Alloy C4	Up to 410 bar (5 945 psi), depending on size and process connection
• Sensor enclosure	No pressure containment
Temperature ratings	
• Process medium	-50 ... +180 °C (-58 ... +356 °F)
• Ambient	-20 ... +50 °C (-4 ... +122 °F)[1)]

Sensors MASS 2100 / FC300 DN 4 with FCT010 transmitter	
Process connections (depending on size and pressure rating)	
• Flanges	EN 1092-1 B1, ANSI/ASME B16.5
• Pipe threads	ASME B1.20 (NPT), ISO 228
• Hygienic threads	DIN 11851, ISO 2853/BS 4825 part 4 (SS3016)
• Hygienic clamps	ISO Clamp 2852
Approvals	
• Hazardous area	ATEX, IECEx, EAC Ex, CSA, cCSAus, EAC
• Pressure equipment	PED
NAMUR	NAMUR-compliant (e.g. NE 21, NE 41, NE 107 and NE 132)
I/O	Up to 4 channels combining analog, relay or digital outputs and binary input
Communication	Modbus RTU (RS 485)
EMC performance	
• Emission	EN 55011/CISPR-11 (Class B)
• Immunity	EN/IEC 61326-1 (Industry)
Mechanical load	18 ... 1 000 Hz random The flow meter will mechanically tolerate 3.17 g RMS in all directions. Flow accuracy cannot be guaranteed under all conditions.

1) If operating outdoors, avoid direct sunlight, particularly in warm climatic regions.

© Siemens 2020

Selection and ordering data

SITRANS FC sensors MASS 2100/FC300 with FCT010 transmitter ↗	Article No. 7ME4811-													Ord. code
	■	■	■	■	■	-	■	■	■	■		■	■	■
↗ Click on the Article No. for the online configuration in the PIA Life Cycle Portal.														
Sensor type and connector size														
MASS 2100 DI 1.5, 1/4"	1	G												
MASS 2100 DI 3, 1/4"	3	A												
MASS 2100 DI 3, 1/4" Heated w. DIN	3	B												
MASS 2100 DI 3,1/4" Heated w. ANSI	3	C												
FC300 DN 4, 1/4"	4	A												
MASS 2100 DI 6, 1/4"	6	A												
MASS 2100 DI 6,1/4" Heated w. EN	6	B												
MASS 2100 DI 6, 1/4" Heated w. ANSI	6	C												
MASS 2100 DI 6, DN 10	6	D												
MASS 2100 DI 6, DN 10 Heated w. EN	6	E												
MASS 2100 DI 6, DN 10 Heated w. ANSI	6	F												
MASS 2100 DI 6, DN 15 (½")	6	G												
MASS 2100 DI 6, DN 15 (½") Heated w. EN	6	H												
MASS 2100 DI 6, DN 15 (½") Heated w. ANSI	6	J												
MASS 2100 DI 6, DN 20 (¾")	6	K												
MASS 2100 DI 6, DN 20 (¾") Heated w. EN	6	L												
MASS 2100 DI 6, DN 20 (¾") Heated w. ANSI	6	M												
MASS 2100 DI 6, DN 25 (1")	6	N												
MASS 2100 DI 6, DN 25 (1") Heated w. EN	6	P												
MASS 2100 DI 6, DN 25 (1") Heated w. ANSI	6	Q												
MASS 2100 DI 15, DN 15 (½")	7	A												
MASS 2100 DI 15, DN 15 (½") Heated w. EN	7	B												
MASS 2100 DI 15, DN 15 (½") Heated w. ANSI	7	C												
MASS 2100 DI 15, DN 20 (¾")	7	D												
MASS 2100 DI 15, DN 20 (¾") Heated w. EN	7	E												
MASS 2100 DI 15, DN 20 (¾") Heated w. ANSI	7	F												
MASS 2100 DI 15, DN 25 (1")	7	G												
MASS 2100 DI 15, DN 25 (1") Heated w. EN	7	H												
MASS 2100 DI 15, DN 25 (1") Heated w. ANSI	7	J												
Process connection/Pressure														
No connections (spare part transmitter)			A	0										
EN 1092-1 B1, PN 40			A	1										
EN 1092-1 B1, PN 100			A	3										
ASME B16.5, RF, Class 150			D	1										
ASME B16.5, RF, Class 600			D	3										
DIN 11851 screwed connection			F	1										
ISO 2852 hygienic clamped			J	1										
ISO 2853 hygienic screwed			J	5										
ISO 228-1 pipe thread, PN 100			C	1										
ISO 228-1 pipe thread, PN 130			C	2										
ISO 228-1 pipe thread, PN 200			C	3										
ISO 228-1 pipe thread, PN 230			C	4										

SITRANS FC sensors MASS 2100/FC300 with FCT010 transmitter	Article No. 7ME4811-													Ord. code
	■	■	■	■	■	-	■	■	■	■		■	■	■
ISO 228-1 pipe thread, PN 265			C	5										
ISO 228-1 pipe thread, PN 350			C	6										
ISO 228-1 pipe thread, PN 365			C	7										
ISO 228-1 pipe thread, PN 410			C	8										
NPT ASME B 1.20.1 pipe thread, PN 100			N	1										
NPT ASME B 1.20.1 pipe thread, PN 130			N	2										
NPT ASME B 1.20.1 pipe thread, PN 200			N	3										
NPT ASME B 1.20.1 pipe thread, PN 230			N	4										
NPT ASME B 1.20.1 pipe thread, PN 265			N	5										
NPT ASME B 1.20.1 pipe thread, PN 350			N	6										
NPT ASME B 1.20.1 pipe thread, PN 365			N	7										
NPT ASME B 1.20.1 pipe thread, PN 410			N	8										
Tube material (wetted) and max. operational temperature														
AISI 316L/EN 1.4435, max 115 °C					1									
AISI 316L/EN 1.4435, max 125 °C					2									
AISI 316L/EN 1.4435, max 180 °C					3									
Hastelloy C22/UNS N06022/EN 2.4602, max. 115 °C					5									
Hastelloy C22/UNS N06022/EN 2.4602, max. 125 °C					6									
Hastelloy C22/UNS N06022/EN 2.4602, max. 180 °C					7									
Calibration														
Mass flow calibration 2 flow × 2 points							1							
Mass flow calibration 2 flow × 2 points + density calibration							4							
Mounting style, transmitter housing and material														
Compact mounted, IP67, Aluminium transmitter housing (DI 3, DI 6 and DI 15 only)									D					
Remote mounted, IP67, Aluminium transmitter housing, analog cable connection with M20 connectors									Z			P	0	D
Ex approvals														
Non-Ex										A				
ATEX Zone 1 / 21										C				
IECEx Zone 1 / 21 (in preparation)										F				
USA (FM, CSA, UL), Zone 1/Div 1										H				
Canada (CSA, UL), Zone 1/Div 1										M				
EAC Zone 1 / 21										U				
Local User Interface														
Blind											1			

© Siemens 2020

Selection and ordering data

	Order code
Futher designs	
Please add "**-Z**" to Article No. and specify Order code(s).	
Cable glands	
None (mechanical sensor)	**A00**
Metric, no glands	**A01**
Metric, plastic	**A02**
Metric, brass/Ni plated	**A05**
Metric, stainless steel	**A06**
NPT, no glands	**A11**
NPT, plastic	**A12**
NPT, brass/Ni plated	**A15**
NPT, stainless steel	**A16**
Integral M12 socket	**A20**
SW functions & CT approvals	
Standard	**B11**
I/O configuration Ch1	
Modbus RTU RS 485	**E14**
I/O configuration Ch2, Ch3 and Ch4	
None	**F00**
Certificates	
Press test certificate CRN	**C01**
Press test certificate PED	**C02**
Material certificate EN 10204-3.1	**C12**
Welding inspection report	**C13**
Factory certificate according to EN 10204 2.2	**C14**
Factory certificate according to EN 10204 2.1	**C15**
Cleaning for oil and grease/ASTM-A380	**C50**
Cleaned according to PWIS	**C51**
Digital cable sensor-transmitter	
None	**L50**
5 m (16.4 ft), sensor cable, 4 wire, with 2 pcs M12 plugs mounted	**L51**
5 m (16.4 ft), sensor cable, 4 wire, without plugs for terminal connection	**L52**
5 m (16.4 ft), sensor cable, 4 wire, with 1 pcs M12 plugs mounted	**L53**
10 m (32.8 ft) standard with M12 connectors fitted	**L55**
10 m (32.8 ft), standard, without plugs	**L56**
10 m (32.8 ft), sensor cable, 4 wire, with 1 pcs M12 plugs mounted	**L57**
25 m (82 ft), standard with M12 connectors fitted	**L59**
25 m (82 ft), standard, without plugs	**L60**
25 m (82 ft), sensor cable, 4 wire, with 1 pcs M12 plugs mounted	**L61**
50 m (164 ft), standard with M12 connectors fitted	**L63**
50 m (164 ft), standard, without plugs	**L64**
50 m (164 ft), sensor cable, 4 wire, with 1 pcs M12 plugs mounted	**L65**
75 m (246 ft), standard with M12 connectors fitted	**L67**
75 m (246 ft), standard, without plugs	**L68**
75 m (246 ft), sensor cable, 4 wire, with 1 pcs M12 plugs mounted	**L69**

	Order code
Futher designs	
Please add "**-Z**" to Article No. and specify Order code(s).	
Analog cable sensor-transmitter	
1 m cable, analog, with 2 × M20 connectors	**L85**
2 m cable, analog, with 2 × M20 connectors	**L86**
5 m cable, analog, with 2 × M20 connectors	**L87**
10 m cable, analog, with 2 × M20 connectors	**L88**
15 m cable, analog, with 2 × M20 connectors	**L89**
Additional data	
Please add "**-Z**" to Article No. and specify Order code(s) and plain text.	
Tag name	
Tag name plate, stainless steel	**Y17**
Extended calibration	
Multi-point high, (5 flows × 2 passes), 10 ... 100 % of Q_{nom}	**Y61**
Multi-point high, (10 flows × 1 pass), 10 ... 100 % of Q_{nom}	**Y63**

Accessories for MASS 2100 and FC300 DN 4 with FCT010 transmitter

Description	Article No.	
SITRANS I300 – Isolating power supply – Ex barrier	**A5E39832532**	
Mounting bracket for flow sensor MASS 2100 DI 1.5	**A5E02590427**	
Mounting bracket for FC300 DN 4 in AISI 304	**A5E02590439**	

© Siemens 2020

Overview

Sensors MASS 2100 and FC300 DN 4 (left) with FCT070 transmitter (right)

Full integration in the Siemens SIMATIC systems PCS7 or in TIA portal with FCT070 Faceplates with the ET 200SP ST & HF powerful IO system for compact control cabinets.

The SITRANS MASS 2100 and FC300 DN 4 system consists of a SITRANS sensor and a SITRANS FCT070 transmitter.

The flowmeter comes in a compact design for all MASS 2100 DI 3 to DI 15.

MASS 2100 DI and FC300 DN 4 the DSL is remote mounted with a analogue connection.

The complete flowmeter system consists of a sensor and a SIMATIC ET 200SP ST & HF Coriolis module FCT070 transmitter.

TM FCT070 offers real-time data processing and the display of all measuring and status data of the Coriolis flowmeter.

For hazardous area the MASS 2100 and the FSC300 sensor can be placed in Ex Zone 1 or Class 1 Div 1 locations . Together with the SITRANS I300 power/barrier module the FCT070 transmitter can be place in Zone 2 or Div 2 areas.

Benefits

- High accuracy better than 0.1 % of mass flow rate
- Large dynamic turn-down ratio better than 500:1
- Densitometer performance available through density accuracy (depending upon sensor size) ranging from 0.0005 to 0.0015 g/cm^3 with a typical repeatability better than 0.0001 to 0.0002 g/cm^3
- Single continuous tube design, with no internal welds, reductions or flow splitters offers optimal hygiene, safety and CIP cleanability for food and beverage and pharmaceutical applications
- Markets biggest wall thickness, ensuring optimal life-time and corrosion resistance and high-pressure durability
- Balanced pipe design with little mechanical energy-loss, ensures optimal performance and stability under non-ideal and unstable process conditions (pressure, temperature, density-changes etc.)
- Full bore design provides lower pressure loss due to same internal diameter throughout the entire sensor
- 4-wire Pt1000 temperature measurement ensures optimum accuracy on mass flow, density and fraction flow
- Multi-plug electrical connector enables true “plug & play”
- Sensor pipe available in high-quality stainless steel AISI 316L/1.4435 or Hastelloy C22/2.4602 offering optimum corrosion resistance
- Centre-block design decouples process noise from the environment such as vibrations, pulsations, pressure shocks etc. making installation flexible and versatile
- Rugged and space-saving sensor design in stainless steel matching all environments
- High-pressure program as standard
- Full hazardous area solutions
- Easy integration into automation process control as TIA portal and PCS7
- Easy selection and integration of flow meters via TIA-Selector
- Cost effective integration of Coriolis flow meters for PLC controlled machines
- SITRANS FCT070 ET 200SP technology module and can combined with all other SIMATIC ET200 ST & HF modules
- The FCT070 has all high -end transmitter functionality integrated including the advanged fraction tables on bord
- Fast and trouble-free communication between the flow meter and the PLC through digital data communication with up to 10 ms update rate
- Integrated advanced Two-stage batch controller functionality without additional modules. I/Os are onboard

© Siemens 2020

Technical specifications

Sensors MASS 2100 / FC300 DN 4 with FCT070 transmitter	
Sizes mm (inch)	MASS 2100 DI 1.5 (1/16) MASS 2100 DI 3 (1/8") MASS 2100 DI 6 (1/4") MASS 2100 DI 15 (1/2") FC300 DN 4 (1/6")
Accuracy	± 0.10 % for liquids additional ±0.40 for gases
Repeatability	± 0.05 %
Flow range Q norm (liquids) (water @ 1 bar pressure loss) (Q_{nom})	
• DI 1.5	19 kg/h (42 lb/h)
• DI 3	90 kg/h (198 lb/h)
• DI 6	500 kg/h (1 102 lb/h)
• DI 15	3 800 kg/h (8 370 lb/h)
• DN 4	140 kg/h (308 lb/h)
Architecture	Remote configuration
System integration	PCS7 and TIA portal with faceplates
Power supply	24 V DC; 19.2 ... 28.8 V
Material	
• Sensor	
- Wetted parts	316L stainless steel or Hastelly C 22
- Enclosure	316L stainless steel
• Transmitter	Aluminum with corrosion-resistant coating Class C4
Enclosure rating	Sensor: IP67 FCT070 transmitter: IP20
Pressure ratings	
• Measuring tubes	
- 316L	Up to 265 bar (3 844 psi), depending on size and process connection
- Nickel Alloy C4	Up to 410 bar (5 945 psi), depending on size and process connection
• Sensor enclosure	No pressure containment
Temperature ratings	
• Process medium	-50 ... +180 °C (-58 ... +356 °F)
• Ambient	-40 ... +60 °C (-4 ... +122 °F)[1]

Sensors MASS 2100 / FC300 DN 4 with FCT070 transmitter	
Process connections (depending on size and pressure rating)	
• Flanges	EN 1092-1 B1, ANSI/ASME B16.5
• Pipe threads	ASME B1.20 (NPT), ISO 228
• Hygienic threads	DIN 11851, ISO 2853/BS 4825 part 4 (SS3016)
• Hygienic clamps	ISO Clamp 2852
Approvals	
• Hazardous area	Sensor : ATEX, IECEx, EAC Ex, CSA, cCSAus, EAC FCT070 transmitter: Zone 2 & Class 1 Div 2 ATEX, IECEx, EAC Ex, CSA, cCSAus, FM; NEPSI, EAC
• Pressure equipment	PED
NAMUR	NAMUR-compliant (e.g. NE 21, NE 41, NE 107 and NE 132)
I/O	2 digital Input and 2 digital output Single and 2 stage batch function
Communication	Integrated PROFINET for SIMATIC integration and other PROFINET Controllers
Totalizer	3 totalizer
EMC performance	
• Emission	EN 55011/CISPR-11 (Class A)
• Immunity	EN/IEC 61326-1 (Industry)
Mechanical load	18 ... 1 000 Hz random The flow meter will mechanically tolerate 3.17 g RMS in all directions. Flow accuracy cannot be guaranteed under all conditions.

[1] If operating outdoors, avoid direct sunlight, particularly in warm climatic regions.

© Siemens 2020

Selection and ordering data

Article No.

SITRANS FC sensors MASS 2100/FC300 DN 4 with DSL ready for FCT070 ↗	7ME4817-												Ord. code
↗ Click on the Article No. for the online configuration in the PIA Life Cycle Portal.	■	■	■	■	■	-	■	■	■	■		■ ■ ■	
Sensor type and connector size													
MASS 2100 DI 1.5, 1/4"	1	G											
MASS 2100 DI 3, 1/4"	3	A											
MASS 2100 DI 3, 1/4" Heated w. DIN	3	B											
MASS 2100 DI 3,1/4" Heated w. ANSI	3	C											
FC300 DN 4, 1/4"	4	A											
MASS 2100 DI 6, 1/4"	6	A											
MASS 2100 DI 6,1/4" Heated w. EN	6	B											
MASS 2100 DI 6, 1/4" Heated w. ANSI	6	C											
MASS 2100 DI 6, DN 10	6	D											
MASS 2100 DI 6, DN 10 Heated w. EN	6	E											
MASS 2100 DI 6, DN 10 Heated w. ANSI	6	F											
MASS 2100 DI 6, DN 15 (½")	6	G											
MASS 2100 DI 6, DN 15 (½") Heated w. EN	6	H											
MASS 2100 DI 6, DN 15 (½") Heated w. ANSI	6	J											
MASS 2100 DI 6, DN 20 (¾")	6	K											
MASS 2100 DI 6, DN 20 (¾") Heated w. EN	6	L											
MASS 2100 DI 6, DN 20 (¾") Heated w. ANSI	6	M											
MASS 2100 DI 6, DN 25 (1")	6	N											
MASS 2100 DI 6, DN 25 (1") Heated w. EN	6	P											
MASS 2100 DI 6, DN 25 (1") Heated w. ANSI	6	Q											
MASS 2100 DI 15, DN 15 (½")	7	A											
MASS 2100 DI 15, DN 15 (½") Heated w. EN	7	B											
MASS 2100 DI 15, DN 15 (½") Heated w. ANSI	7	C											
MASS 2100 DI 15, DN 20 (¾")	7	D											
MASS 2100 DI 15, DN 20 (¾") Heated w. EN	7	E											
MASS 2100 DI 15, DN 20 (¾") Heated w. ANSI	7	F											
MASS 2100 DI 15, DN 25 (1")	7	G											
MASS 2100 DI 15, DN 25 (1") Heated w. EN	7	H											
MASS 2100 DI 15, DN 25 (1") Heated w. ANSI	7	J											
Process connection/Pressure													
No connections (spare part transmitter)			A	0									
EN 1092-1 B1, PN 40			A	1									
EN 1092-1 B1, PN 100			A	3									
ASME B16.5, RF, Class 150			D	1									
ASME B16.5, RF, Class 600			D	3									
DIN 11851 crewed connection			F	1									
ISO 2852 hygienic clamped			J	1									
ISO 2853 hygienic screwed			J	5									
ISO 228-1 pipe thread, PN 100			C	1									
ISO 228-1 ipe thread, PN 130			C	2									
ISO 228-1 pipe thread, PN 200			C	3									

Article No.

SITRANS FC sensors MASS 2100/FC300 DN 4 with DSL ready for FCT070	7ME4817-												Ord. code
	■	■	■	■	■	-	■	■	■	■		■ ■ ■	
ISO 228-1 ipe thread, PN 230			C	4									
ISO 228-1 ipe thread, PN 265			C	5									
ISO 228-1 pipe thread, PN 350			C	6									
ISO 228-1 pipe thread, PN 365			C	7									
ISO 228-1 pipe thread, PN 410			C	8									
NPT ASME B 1.20.1 pipe thread, PN 100			N	1									
NPT ASME B 1.20.1 pipe thread, PN 130			N	2									
NPT ASME B 1.20.1 pipe thread, PN 200			N	3									
NPT ASME B 1.20.1 pipe thread, PN 230			N	4									
NPT ASME B 1.20.1 pipe thread, PN 265			N	5									
NPT ASME B 1.20.1 pipe thread, PN 350			N	6									
NPT ASME B 1.20.1 pipe thread, PN 365			N	7									
NPT ASME B 1.20.1 pipe thread, PN 410			N	8									
Tube material (wetted) and max. operational temperature													
AISI 316L/EN 1.4435, max. 115 °C					1								
AISI 316L/EN 1.4435, max. 125 °C					2								
AISI 316L/EN 1.4435, max. 180 °C					3								
Hastelloy C22/UNS N06022/EN 2.4602, max. 115 °C					5								
Hastelloy C22/UNS N06022/EN 2.4602, max. 125 °C					6								
Hastelloy C22/UNS N06022/EN 2.4602, max. 180 °C					7								
Calibration													
Mass flow calibration 2 flow × 2 points							1						
Mass flow calibration 2 flow × 2 points + density calibration							4						
Mounting style, transmitter housing and material													
Compact mounted, IP67, Aluminium transmitter housing (DI 3, DI 6 and DI 15)									D				
Remote field mount, IP67, Aluminium transmitter housing, analog cable connection with M20 connectors									Z			P 0 D	
Ex approvals													
Non-Ex										A			
ATEX Zone 1 / 21										C			
IECEx Zone 1 / 21 (in preparation)										F			
USA (FM, CSA, UL), Zone 1/Div 1										H			
Canada (CSA, UL), Zone 1/Div 1										M			
EAC Zone 1 / 21										U			
Local User Interface													
Blind											1		

3

© Siemens 2020

3

Selection and ordering data

	Order code
Further designs	
Please add "**-Z**" to Article No. and specify Order code(s).	
Cable glands	
None (mechanical sensor)	**A00**
Metric, no glands	**A01**
Metric, plastic	**A02**
Metric, brass/Ni plated	**A05**
Metric, stainless steel	**A06**
NPT, no glands	**A11**
NPT, plastic	**A12**
NPT, brass/Ni plated	**A15**
NPT, stainless steel	**A16**
Integral M12 socket	**A20**
SW functions & CT approvals	
Standard	**B10**
I/O configuration Ch1	
None (replacement sensor)	**E00**
I/O configuration Ch2, Ch3 and Ch4	
None	**F00**
Certificates	
Press test certificate CRN	**C01**
Press test certificate PED	**C02**
Material certificate EN 10204-3.1	**C12**
Welding inspection report	**C13**
Factory certificate according to EN 10204 2.2	**C14**
Factory certificate according to EN 10204 2.1	**C15**
Cleaning for oil and grease/ASTM-A380	**C50**
Digital cable sensor-transmitter	
None	**L50**
5 m (16.4 ft), sensor cable, 4 wire, without plugs for terminal connection	**L52**
5 m (16.4 ft), sensor cable, 4 wire, with 1 pcs M12 plugs mounted	**L53**
10 m (32.8 ft), sensor cable, 4 wire, without plugs for terminal connection	**L56**
10 m (32.8 ft), sensor cable, 4 wire, with 1 pcs M12 plugs mounted	**L57**
25 m (82 ft), sensor cable, 4 wire, without plugs for terminal connection	**L60**
25 m (82 ft), sensor cable, 4 wire, with 1 pcs M12 plugs mounted	**L61**
50 m (164 ft), sensor cable, 4 wire, without plugs for terminal connection	**L64**
50 m (164 ft), sensor cable, 4 wire, with 1 pcs M12 plugs mounted	**L65**
75 m (246 ft), sensor cable, 4 wire, without plugs for terminal connection	**L68**
75 m (246 ft), sensor cable, 4 wire, with 1 pcs M12 plugs mounted	**L69**

	Order code
Further designs	
Please add "**-Z**" to Article No. and specify Order code(s).	
Analog cable sensor-transmitter	
1 m cable, analog, with 2 × M20 connectors	**L85**
2 m cable, analog with 2 × M20 connectors	**L86**
5 m cable, analog with 2 × M20 connectors	**L87**
10 m cable, analog with 2 × M20 connectors	**L88**
15 m cable, analog with 2 × M20 connectors	**L89**
Additional data	
Please add "**-Z**" to Article No. and specify Order code(s) and plain text.	
Tag name	
Tag name plate, stainless steel	**Y17**
Extended calibration	
Multi-point high, (5 flows × 2 passes), 10 ... 100 % of Q_{nom}	**Y61**
Multi-point high, (10 flows × 1 pass), 10 ... 100 % of Q_{nom}	**Y63**

Description	Article No.	
SITRANS FCT070 Transmitter for ET 200SP	**7ME4138-6AA00-0BB1**	
BU20-P12+A0+4B, PU1 Baseunit plate for ET 200SP	**6ES7193-6BP20-0BB0** **6ES7193-6BP20-0BB1**	
SITRANS I300 Isolating power supply – Ex barrier	**A5E39832532**	

Accessories for MASS 2100 and FC300 DN 4 with FCT070 transmitter

Description	Article No.	
Mounting bracket for flow sensor MASS 2100 DI 1.5	**A5E02590427**	
Mounting bracket for FC300 DN 4 in AISI 304	**A5E02590439**	

© Siemens 2020

Selection and ordering data

Accessories and spare parts for flowmeters

Description	Article No.	
CT connector Tamper cover for CT locking. Fits over the M12 connector at both sensor and transmitter ends of the remote system cable (2 pcs.)	**A5E31478498**	
Bag of glands (metric) in black plastic[1]	**A5E03907414**	
Bag of glands, (metric) in gray plastic Ex e/i[1]	**A5E03907424**	
Bag of glands (metric) in AISI 316 SS Ex e/i[1]	**A5E03907429**	
Bag of glands (metric) in Ni-plated brass Ex e/i[1]	**A5E03907430**	
Bag of glands (NPT) in black plastic[2]	**A5E03907435**	
Bag of glands (NPT) in gray plastic Ex e/i[2]	**A5E03907451**	
Bag of glands (NPT) in AISI 316 SS Ex e/i[2]	**A5E03907467**	
Bag of glands (NPT) in Ni-plated brass Ex e/i[2]	**A5E03907473**	
Standard cable (non-Ex) with 2 x M12 connectors, PO insulation and PUR sleeve, gray, -40 ... +80 °C (-40 ... +176 °F)		
• 5 m (16.4 ft)	**A5E03914805**	
• 10 m (32.8 ft)	**A5E03914850**	
• 25 m (82 ft)	**A5E03914853**	
• 50 m (164 ft)	**A5E03914859**	
• 75 m (246 ft)	**A5E03914861**	
• 150 m (492 ft)	**A5E03914874**	
Standard cable (non-Ex) for termination, PO insulation and PUR sleeve, gray, -40 ... +80 °C (-40 ... +176 °F)		
• 5 m (16.4 ft)	**A5E03914833**	
• 10 m (32.8 ft)	**A5E03914849**	
• 25 m (82 ft)	**A5E03914854**	
• 50 m (164 ft)	**A5E03914856**	
• 75 m (246 ft)	**A5E03914864**	
• 150 m (492 ft)	**A5E03914873**	

Description	Article No.	
Standard cable (non-Ex) f with M12 connector on one side, PO insulation and PUR sleeve, gray, -40 ... +80 °C (-40 ... +176 °F)		
• 5 m (16.4 ft)		
• 10 m (32.8 ft)		
• 25 m (82 ft)		
• 50 m (164 ft)		
• 75 m (246 ft)		
• 150 m (492 ft)		
Standard cable (Ex) with 2 x M12 connectors, PO insulation and PUR sleeve, blue, -40 ... +80 °C (-40 ... +176 °F)		
• 5 m (16.4 ft)	**A5E03914929**	
• 10 m (32.8 ft)	**A5E03914962**	
• 25 m (82 ft)	**A5E03914995**	
• 50 m (164 ft)	**A5E03915004**	
• 75 m (246 ft)	**A5E03915074**	
• 150 m (492 ft)	**A5E03915088**	
Standard cable (Ex) for termination, PO insulation and PUR sleeve, blue, -40 ... +80 °C (-40 ... +176 °F)		
• 5 m (16.4 ft)	**A5E03914945**	
• 10 m (32.8 ft)	**A5E03914973**	
• 25 m (82 ft)	**A5E03914984**	
• 50 m (164 ft)	**A5E03915015**	
• 75 m (246 ft)	**A5E03915057**	
• 150 m (492 ft)	**A5E03915100**	
Standard cable (Ex) with M12 connector on one side, PO insulation and PUR sleeve, blue, -40 ... +80 °C (-40 ... +176 °F)		
• 5 m (16.4 ft)		
• 10 m (32.8 ft)		
• 25 m (82 ft)		
• 50 m (164 ft)		
• 75 m (246 ft)		
• 150 m (492 ft)		
Analog signal cable For analog cable connection between MASS 2100/ FC300 sensor and FCT010/FCT030/FCT070 transmitters. 5 × 2 × Ø 0.34 mm screened and twisted in pairs. Blue PVC insulation and sleeve. With two M20 connectors, female/female. -20 ... 105 °C (-4 ... +221 °F), Ex		
• 1 m (3.28 ft)	**A5E42815465**	
• 2 m (6.56 ft)	**A5E42521862**	
• 5 m (16.4 ft)	**A5E42522447**	
• 10 m (32.8 ft)	**A5E42523233**	
• 15 m (49.21 ft)	**A5E42523347**	

[1] 2 pcs M20; 1 pce M25 with single and dual cable inserts.

[2] 2 pcs ½" NPT; 1 pce ½" NPT with single and dual cable inserts.

© Siemens 2020

Selection and ordering data (continued)

Heating jacket for FCS400

Description	Article No.	
Heating jacket, indoor use, 0 ... 200 °C (32 ...392 °F) max. temperature. Complete with 5 m (16.4 ft) high temperature cable fitted. Dedicated plug connection to included controller		
• 230 V AC		
- DN 15 electric	**A5E33035287**	
- DN 25 electric	**A5E33035324**	
- DN 50 electric	**A5E33035325**	
• 115 V AC		
- DN 15 electric	**A5E32877520**	
- DN 25 electric	**A5E32877556**	
- DN 50 electric	**A5E32877557**	
Heating jacket controller, IP65. Digital display for 0 ... 200 °C (32 ...392 °F) control setpoint		
• 230 V AC	**A5E03839193**	
• 115 V AC	**A5E03839194**	

Spare parts - sensor FCS400/FCS300 and MASS 2100/FC300

Description	Article No.	
Blind lid in painted aluminum with silicone o-ring seal	**A5E03549295**	
Sensor housing		
• Metric	**A5E03549313**	
• NPT	**A5E03906080**	
Bag of loose parts for sensor; including cable strain relief components, washer, seals, silicone o-rings, and assorted screws	**A5E03549324**	
M12 option for sensor housing in stainless steel. Pre-wired and potted to replace M12 socket in DSL housing	**A5E03906095**	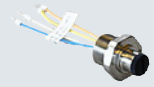

Spare parts - Transmitter FCT030 field mount enclosure (all FW versions)

Description	Article No.	
Display lid in painted aluminum with Ex glass plate and silicone o-ring seal Ex and Non-Ex	**A5E03549344**	
Blind lid in painted aluminum with silicone o-ring seal	**A5E03549429**	
Bag of loose spare parts; including cable strain relief components, mounting tool, seals and gasket, assorted screws and washers, hex cap nut, blind connectors, and silicone o-rings	**A5E03549396**	
Mounting bracket - FCT030 field mount; in painted aluminum for pipe or wall mounting of transmitter FCT030 remote version. Including lock ring, pressure pads and seal cap	**A5E03906091**	
M12 option - remote - in painted aluminum. Pre-wired and potted replacement M12 connection for FCT030 field mount transmitter remote version	**A5E03906104**	
Remote terminal house painted aluminum for sensor cable termination at FCT030 transmitter remote version. Pre-wired and potted		
• M20	**A5E03906112**	
• NPT	**A5E03906130**	

© Siemens 2020

Selection and ordering data (continued)

Spare parts - Transmitter FCT030 (FW 3.1)

Description	Article No.	
Display and keypad assembly for field mount enclosure, with Siemens logo. For HW 2 and FW 3.1 version	**A5E03548971**	
Sensor cassette (compact) (HW version 2, FW 3.1.x)	**A5E03549142**	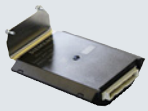
Sensor cassette (remote) (HW version 2, FW 3.1.x)	**A5E03549098**	
Frontend cassette Spare part frontend cassette for remote version of FC430 and cassette for FC410 For firmware V 3.x	**A5E03549191**	
Power supply for field mount enclosure 100 ... 240 V AC, 47 ... 63 Hz, 24 ... 90 V DC (HW version 2 and FW 3.1.x)	**A5E03549413**	
Transmitter cassette (active) 4 ... 20 mA output and HART 7.2 (HW version 2 and FW 3.1.x)	**A5E03549357**	
Transmitter cassette (passive) 4 ... 20 mA output and HART 7.2 (HW version 2 and FW 3.1.x)	**A5E03549383**	
I/O assembly Advise Order code F40 to F97, Selection and Ordering data[1)]	**A5E03939114**	
SensorFlash (micro SD card 1G)	**A5E03915258**	

1) The I/O configuration must be stated in the "Remark" field.
The I/O configuration is found in the F option of the ordering code. e.g. code “F40” for ordering Ch2 Active Current/Freq/Pulse, Ch3 Active Current/Freq/Pulse, Ch4 Active Input.

Spare parts FCT030 - Fieldmount enclosure (FW 4.0)

Description	Article No.	
Display and keypad assembly • From firmware 4.0, with Siemens logo	**A5E37705139**	
• From firmware 4.0, neutral version - no company logo	**A5E39844362**	
Power supply for field mount enclosure FCT030 V 4.0 Fieldmount 100 ... 240 V AC, 47 ... 63 Hz 19.2 ... 28.8 V DC	**A5E38264471**	
Sensor cassette (compact) for systems without DSL and for systems with analog sensor connection, HW version 3, FW version 4.0	**A5E41526318**	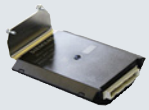
Sensor cassette (remote) Ex barrier module digital sensor connection (HW version 3, FW version 4.0)	**A5E03549098**	
Sensor cassette (remote) for systems with DSL, HW version 3, FW version 4.0	**A5E03549098**	
Frontend cassette Spare part frontend DSL for remote version. For firmware V 4.0	**A5E41526286**	
SensorFlash (micro SD card 4G)	**A5E38288507**	
Transmitter cassette for firmware 4.0 • Ch1 E02: I/O and comm (active/passive) 4 ... 20 mA output and HART 7.5, Non-Ex	**A5E38013040**	
• Ch1 E06: I/O and comm (-active) 4 ... 20 mA output and HART 7.5, Ex	**A5E38012278**	
• Ch1 E07: I/O and comm (-passive) 4 ... 20 mA output and HART 7.5, Ex	**A5E38013025**	
• Ch1 E10: Communication PROFIBUS PA, Non-Ex & Ex	**A5E41216315**	
• Ch1 E11: Communication PROFIBUS DP, Non-Ex	**A5E41216042**	
• Ch1: Communication Modbus RTU 485, Ex	**A5E38013054**	
• Ch1: Communication Modbus RTU 485, Non-Ex	**A5E38013069**	

© Siemens 2020

Selection and ordering data (continued)

Description	Article No.
I/O Cassette for firmware 4.0	
• Ch2: Current/Frequ./Pulse, Ch3: None, Ch4: None, F01, Non-Ex	**A5E38006256**
• Ch2: Current/Frequ./Pulse, Ch3: Current/Frequ./Pulse, Ch4: None, F02, Non-Ex	**A5E38006558**
• Ch2: Current/Frequ./Pulse, Ch3: Current/Frequ./Pulse, Ch4: Current/Frequ./Pulse, F03, Non-Ex	**A5E38006598**
• Ch2: Current/Frequ./Pulse, Ch3: Current/Frequ./Pulse, Ch4: Relay, F04, Non-Ex	**A5E38006896**
• Ch2: Current/Frequ./Pulse, Ch3: Relay, Ch4: Relay, F05, Non-Ex	**A5E38006900**
• Ch2: Current/Frequ./Pulse, Ch3: Relay, Ch4: None, F06, Non-Ex	**A5E38011432**
• Ch2: Current/Frequ./Pulse, Ch3: None, Ch4: None, F11, Ex-passive	**A5E38011478**
• Ch2: Current/Frequ./Pulse, Ch3: Current/Frequ./Pulse, Ch4: None, F12, Ex-passive	**A5E38011509**
• Ch2: Current/Frequ./Pulse, Ch3: Current/Frequ./Pulse, Ch4: Current/Frequ./Pulse, F13, Ex-passive	**A5E38011541**
• Ch2: Current/Frequ./Pulse, Ch3: Current/Frequ./Pulse, Ch4: Relay, F14, Ex-passive	**A5E38011600**
• Ch2: Current/Frequ./Pulse, Ch3: Relay, Ch4: Relay, F15, Ex-active	**A5E38011618**
• Ch2: Current/Frequ./Pulse, Ch3: Relay, Ch4: None, F16, Ex-active	**A5E38011908**
• Ch2: Current/Frequ./Pulse, Ch3: None, Ch4: None, F21, Ex-active	**A5E38012039**
• Ch2: Current/Frequ./Pulse, Ch3: Current/Frequ./Pulse, Ch4: None, F22, Ex-active	**A5E38012056**
• Ch2: Current/Frequ./Pulse, Ch3: Current/Frequ./Pulse, Ch4: Current/Frequ./Pulse, F23, Ex-active	**A5E38012121**
• Ch2: Current/Frequ./Pulse, Ch3: Relay, Ch4: Relay, F24, Ex-active	**A5E38019235**
• Ch2: Current/Frequ./Pulse, Ch3: Current/Frequ./Pulse, Ch4: Relay, F25, Ex-passive	**A5E38019263**
• Ch2: Current/Frequ./Pulse, Ch3: Relay, Ch4: None, F26, Ex-passive	**A5E38019378**

Description	Article No.
Adapter cable for FCS400 sensor with new transmitter DSL/FCT010/FCT030 Version 4.0	**A5E50371933**
Remote adapter for wall bracket M20 cable connection	
• Ex	**A5E42404417**
• Non-Ex	**A5E42846478**
Wall bracket for FCT030 for M20 analog cable connector	**A5E42404426**
Wall bracket for FCT010 for M20 analog cable connector	**A5E42404447**
Compact adapter for DSL/FCT030 For upgrade from MASS 2100 DI 3, DI 6, DI 15 with MASS 6000 compact to DSL/FCT030	
• Ex	**A5E42846758**
• Non-Ex	**A5E42846760**
Compact adapter for DSL/FCT030 FCS300 and FCS400 (DN 100 and DN 150 sensor) adapter for compact mount DSL, FCT010 or FCT030 Ex and Non-Ex	**TBD**

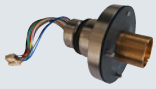

© Siemens 2020

Selection and ordering data (continued)

Spare parts - FCT030 wall mount enclosure

Description	Article No.	
Display and keypad -assembly • For wall mount enclosure, Siemens logo	**A5E37697615**	
• For wall mount enclosure, neutral version	**A5E39844261**	
Power supply for wall mount 100 ... 240 V AC, 47 ... 63 Hz 19.2 ... 28.8 V DC	**A5E38263021**	
Sensor cassette for FCT030 wall mounting enclosure	**TBD**	
Foam insert set for wall mount with connectors	**A5E38287828**	
Wall mount enclosure front Versions: • blind, Siemens version • blind, neutral version - no company logo • with glass	**A5E**	

Description	Article No.	
Wall mount enclosure bracket for pipe mounting	**A5E38288020**	
Wall bracket panel mounting	**A5E38288032**	
Bag of loose spare parts for wall mount including cable strain relief components, mounting tool, seals and gasket, assorted screws and washers, hex cap nut, blind connectors and O-rings	**A5E38288072**	
Metall kit PSU cover back pane for wall mount enclosure	**A5E38415145**	
Power input cover plate for wall mount enclosure	**A5E38415205**	

© Siemens 2020

MASS 6000 Generation - Spare parts

Overview

MASS 6000 is based on digital signal processing technology – engineered for high performance, fast flow step response, fast batching applications, high immunity against process noise, easy to install, commission and maintain.

This product is not longer available. Repair and spare parts for MASS 6000 (all models and variants) can still be ordered. See spare part list.

Selection and ordering data

Accessories and spare parts for MASS 6000 generation

Description	Article No.	
Cable with multiple plug Standard blue cable between MASS 6000 and MASS 2100, 5 × 2 × 0.34 mm² twisted and screened in pairs. Temperature range -20 ... +110 °C (-4 ... +230 °F)		
• 5 m (16.4 ft)	**FDK:083H3015**	
• 10 m (32.8 ft)	**FDK:083H3016**	
• 25 m (82 ft)	**FDK:083H3017**	
• 50 m (164 ft)	**FDK:083H3018**	
• 75 m (246 ft)	**FDK:085U0229**	
• 150 m (492 ft)	**FDK:083H3055**	

Description	Article No.	
Adapter for MASS 2100 M23 electrical adapter for MASS 2100 DI 3, DI 6, DI 15, DI 25 and DI 40	**FDK:083L8889**	
M20 connector for cable mounting	**FDK:083H5056**	
2 kB SENSORPROM unit, including programming (Sensor Serial No. and Article No. must be specified by ordering)	**FDK:083H4410**	

Description	Article No.	
Cable glands, screwed entries type in polyamide **100 °C (212 °F), black, 2 pcs.**		
• M20	**A5E00822490**	
• ½" NPT	**A5E00822501**	
Sun lid for MASS 6000 transmitter (frame and lid)	**A5E02328485**	

Add-on module

Description	Article No.	
HART[1)]	**FDK:085U0226**	
PROFIBUS PA Profile 3[1)]	**FDK:085U0236**	
PROFIBUS DP Profile 3	**FDK:085U0237**	
MODBUS RTU RS 485	**FDK:085U0234**	
FOUNDATION Fieldbus H1[1)]	**A5E02054250**	
DeviceNet	**FDK:085U0229**	

[1)] Modules are rated Ex i when used with MASS 6000 Ex d.

© Siemens 2020

Spare parts for compact or remote IP67 version

Description	Article No.	
MASS 6000 transmitter IP67/NEMA 6 Note: No CE decleration Fibre glass reinforced polyamide and without connection board 1 current output 1 frq./pulse output 1 relay output • 115/230 V AC, 50/60 Hz • 24 V AC/DC	 **7ME4110-1AA10-1AA0** **7ME4110-1AA20-1AA0**	
Wall mounting unit for IP67/NEMA 6 version with wall bracket, without connection board but with • 4 × M20 cable glands • 4 × ½" NPT cable glands	 **FDK:085U1018** **A5E01164211**	
Connection board/PCB Supply voltage: 115/230 V/24 V AC/DC	**FDK:083H4260**	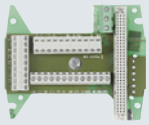
Terminal box kit • M20 cable glands • ½" NPT cable glands Change from remote to safe area compact mounting of MASS 6000 IP67/NEMA 6 with MASS 2100. The kit consists of a terminal box in polyamide incl. connection board, cable and connector between PCB and sensor pedestal, PCB, seal and screws (4 pcs.) for mounting on sensor. Not approved for hazardous locations	 **A5E00832338** **A5E00832342**	
Terminal box, in polyamide, inclusive lid • M20 cable glands • ½" NPT cable glands Not approved for hazardous locations	 **FDK:085U1050** **FDK:085U1052**	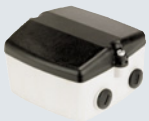
Terminal box - lid in polyamide	**FDK:085U1003**	
Display and keypad • Siemens Front	**FDK:085U1039**	

Add-on spare parts required due to RoHs directives and EoL for EU and EU related countries

Description	Article No.
MASS 6000 IP67 Spare part PCB main • 230 V • 24 V	 **A5E41718138** **A5E41718346**
MASS 6000 19"/IP20 Spare part PCB main • 1 current, 230 V • 3 current, 230 V • 1 current, 24 V • 3 current, 24 V	 **A5E43226138** **A5E43226145** **A5E43226154** **A5E43226168**
MASS 6000 19"/IP20 Ex Spare part PCB main • 1 current, 230 V • 3 current, 230 V • 1 current, 24 V • 3 current, 24 V	 **A5E43226277** **A5E43226342** **A5E43226441** **A5E43226455**
MASS 6000 Ex d, spare part PCB Stainless steel, without module	**FDK:083H3061**
MASS 6000 Ex d, spare part barriere Stainless steel	**A5E41718720**
MASS 6000 19"/IP20, barriere PCB, Ex	**A5E41718669**
MASS 6000 Ex d, connection board Stainless steel	**A5E41718522**

3

© Siemens 2020

Selection and ordering data (continued)

Accessories

Enclosure (without PCB, connection board)

Description	Article No.	
IP66/NEMA 4X, wall mounting enclosure for 19" inserts, 21 TE	**FDK:083F5037**	

Enclosure

Description	Article No.	
Panel mounting enclosure for 19" insert (21 TE); IP65/NEMA 2 enclosure in ABS plastic for front panel mounting	**FDK:083F5030**	
Panel mounting enclosure for 19" insert (42 TE); IP65/NEMA 2 enclosure in ABS plastic for front panel mounting	**FDK:083F5031**	
Back of panel mounting enclosure for 19" insert (21 TE); IP20/NEMA 1 enclosure in aluminum	**FDK:083F5032**	
Back of panel mounting enclosure for 19" insert (42 TE); IP20/NEMA 1 enclosure in aluminum	**FDK:083F5033**	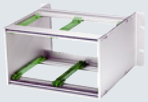
Front cover (7 TE) for panel mounting enclosure	**FDK:083F4525**	

Connection boards/PCB for MASS 6000 and MASS 2100 sensors

Description	Article No.	
Connection board MASS 6000 for 19" IP20 rack mounting version • 24 V, 115/230 V	**FDK:083H4272**	
Connection board MASS 6000 Ex [ia] IIC for 19" IP20 rack mounting version • 24 V, 115/230 V	**FDK:083H4273**	
Connection board MASS 6000 for 19" wall mounting version, for enclosure FDK:083F5037/FDK:083F5038 • 24 V, 115/230 V	**FDK:083H4274**	
Connection board MASS 6000 Ex [ia] IIC for 19" wall mounting version, for enclosure FDK:083F5037/FDK:083F5038 • 24 V, 115/230 V	**FDK:083H4275**	

Connection boards/PCB for MASS 6000 and MC2 sensors

Description	Article No.	
Connection board MASS 6000 for 19" IP20 rack mounting version • 24 V, 115/230 V	**FDK:083H4272**	
Connection board MASS 6000 for Ex application[1] and 19" IP20 rack mounting version (connection board MASS 6000 to MC2 sensors Ex-approved) • 24 V, 115/230 V	**FDK:083H4294**	
Connection board MASS 6000 for 19" wall mounting version, for enclosure FDK:083F5037/FDK:083F5038 • 24 V, 115/230 V	**FDK:083H4274**	
Connection board MASS 6000 for Ex application1) and 19" wall mounting version (connection board MASS 6000 to MC2 sensors Ex-approved), for enclosure FDK:083F5037/FDK:083F5038 • 24 V, 115/230 V	**FDK:083H4295**	

[1] Attention (Ex application): MC2 Ex version sensors must only be connected to connection board FDK:083H4294 or FDK:083H4295.

Description	Article No.	
Wall mounting enclosure in ABS plastic IP65 with connection board/PCB for Ex application connected to MC2 Ex sensors	**FDK:083H4296**	

© Siemens 2020

Selection and ordering data (continued)

Spare parts 19" versions

Enclosure (without PCB, connection board)

Description	Article No.	
IP66/NEMA 4X, wall mounting enclosure for 19" inserts (without back plates). Use with PCB A5E02559813 or A5E02559814		
• 21 TE	**FDK:083F5037**	
• 42 TE	**FDK:083F5038**	
Display unit for 19" versions Order the Display and Keypad accessory from MASS 6000 IP67 compact/remote (FDK:085U1039) and use the display part only for replacement	**FDK:083U1039**	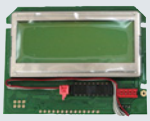

Accessories

Add-on module for remote and compact MASS 6000 Ex d

Description	Article No.	
HART (Ex-i)	**FDK:085U0226**	
PROFIBUS PA Profile 3 (Ex-i)	**FDK:085U0236**	
FOUNDATION Fieldbus H1 (Ex-i)	**A5E02054250**	

Operating instructions for SITRANS F add-on modules

Description	Article No.
HART	
• English	**A5E03089708**
Profibus PA/DP	
• English	**A5E00726137**
• German	**A5E01026429**
MODBUS	
• English	**A5E00753974**
• German	**A5E03089262**
FOUNDATION Fieldbus	
• English	**A5E02318728**
• German	**A5E02488856**
DeviceNet	
• English	**A5E03089720**

This device is shipped with Safety Notes and a DVD containing further SITRANS F C literature.

All literature is available to download for free, in a range of languages, at

www.siemens.com/processinstrumentation/documentation

© Siemens 2020

SIFLOW FC070

Overview

SIFLOW FC070 is based on the SIMATIC S7-300 and the MASS 6000 technology.

The SIFLOW FC070 transmitter can be analogue connected with the Sitrans FC MASS 2100 DI 1.5, DI 3, DI 6, DI 15 and the FC300 DN4.

SIFLOW FC070 is available in two versions:

- SIFLOW FC070 Standard
- SIFLOW FC070 Ex & CT

The SIFLOW FC070 transmitter delivers true multi-parameter measurements i.e. mass flow, volume flow, density, temperature and fraction.

SIFLOW FC070 is designed for integration in a variety of automation systems, i.e.:

- Central mounted in S7-300, C7
- Decentralized in ET 200M for use with S7-300 and S7-400 as PROFIBUS DP/PROFINET masters
- Decentralized in ET 200M for use with any automation system using standardized PROFIBUS DP/PROFINET masters
- Stand-alone via a Modbus RTU master, i.e. SIMATIC PDM

Benefits

- Easy integration in SIMATIC S7 and PCS 7
- Support of SIMATIC PDM configuration tool via Modbus
- Dedicated mass flow chip with high-performance ASIC technology
- True 30 Hz update rate securing fast batching and step response
- Superior noise immunity due to a DFT (Discrete Fourier Transformation) algorithm
- Front end resolution better than 0.35 ns improves zero point stability and enhances dynamic turn-down ratio on flow and density accuracy
- Built-in batch controller with two-stage control and compensation
- Digital outputs for direct batch control, frequency/pulse
- Modbus RTU RS 232/485 interface for connection to SIMATIC PDM or any other Modbus master
- Digital input for batch control, zero adjust
- Multiple LED's for easy indication of flow, error and I/O state
- SENSORPROM technology automatically configures the transmitter during start-up providing:
  - Factory pre-programming with calibration data, pipe size, sensor type and I/O settings
  - Any values or settings changed by the user is stored automatically
  - Automatically re-programming of a new transmitter, without loss of settings and accuracy
  - Transmitter replacement in less than 30 seconds
- Four-wire Pt1000 measurement ensuring optimum accuracy mass flow, density and fraction flow
- Fraction flow computation based on 3rd-order algorithm matching all applications

Application

SIFLOW FC070 mass flowmeters are suitable for all applications within the entire process industry, where there is a demand for accurate flow measurement. The meters are suitable for measuring on liquid and gas.

The main applications for the SIFLOW FC070 transmitter can be found in the following industries:

- Food and beverage
- Pharmaceutical
- Automotive
- Oil and gas
- Power generation and utility
- Water and waste water

Design

SIFLOW FC070 is designed in an IP20 SIMATIC S7-300 enclosure and for use in central and de-central cabinets where sensors: FCS200, FC300 and MASS 2100 are remotely mounted.

Function

The following key functionalities are available:

- Mass flow rate, volume flow rate, density, temperature and fraction flow
- Two built-in totalizers which can freely be set for counting mass, volume or fraction
- 1 frequency/pulse output
- 1 phase shifted 90°/180° frequency/pulse output
- Two-stage batch controller
- 1 digital input
- Low flow cut-off
- Empty pipe detection
- Noise filter settings for different applications
- Simulation
- Automatic zero point adjustment with zero point evaluation feed back
- Configurable upper and lower alarm and warning limits for all process values
- Comprehensive status and error reporting

© Siemens 2020

Technical specifications

Measurement of	Mass flow, volume flow, density, sensor temperature, fraction A flow, fraction B flow, fraction A in %
Measurement functions	
• Totalizer 1	Totalization of mass flow, volume flow, fraction A, fraction B
• Totalizer 2	Totalization of mass flow, volume flow, fraction A, fraction B
• Single and 2-stage batch function	Batching function with the use of one or two outputs for dosing in high and low speed
• 4 programmable limits	4 programmable high/low limits for mass flow, volume flow, density, sensor temperature, fraction A flow, fraction B flow, fraction A in %. Limits will generate an alarm if reached
Digital input	
Functions	Start batch, stop batch, start/stop batch, hold/continue batch, reset totalizer 1, reset totalizer 2, reset totalizer 1 and 2, zero adjust, force frequency output, freeze frequency output
High signal	• Nominal voltage: 24 V DC • Lower limit: 15 V DC • Upper limit: 30 V DC • Current: 2 … 15 mA
Low signal	• Nominal voltage: 0 V DC • Lower limit: -3 V DC • Upper limit: 5 V DC • Current: -15 … +15 mA
Input	Approx. 10 kΩ
Switching	Max. 100 Hz
Digital output 1 and 2	
Functions	• Output 1: Pulse, frequency, redundancy pulse, redundancy frequency 2-stage batch, batch • Output 2: Redundancy pulse, redundancy frequency, 2-stage batch
Voltage supply	3 … 30 V DC (passive output)
Switching current	Max. 30 mA at 30 V DC
Voltage drop	≤ 3 V DC at max. current
Leakage current	≤ 0.4 mA at max. voltage 30 V DC
Load resistance	1 … 10 kΩ
Switching frequency	0 … 12 kHz 50 % duty cycle
Functions	Pulse, frequency, redundancy pulse, redundancy frequency 2-stage batch, batch
Communication	
Modbus RS 232C	• Max. baud rate: 115 200 baud • Max. line length: 15 m at 115 200 baud • Signal level: according to EIA-RS 232C
Modbus RS 485	• Max. baud rate: 115 200 baud • Max. line length: 1 200 m at 115 200 baud • Signal level: according to EIA-RS 485 • Bus termination: Integrated. Can be enabled by inserting wire jumpers.

Galvanic isolation	All inputs, outputs and communication interfaces are galvanically isolated. Isolation voltage: 500 V
Power	
Supply	24 V DC nominal
Tolerance	20.4 V DC … 28.8 V DC
Consumption	Max. 7.2 W
Fuse	T1 A/125 V, not replaceable by operator
Environment	
Ambient temperature	Storage: -40 °C … +70 °C (-40 °F … +158 °F)
Operation conditions	Horizontally mounted rail: • SIFLOW FC070 Standard: 0 … +60 °C (32 … +140 °F) • SIFLOW FC070 Ex CT: -40 … +60 °C (-40 … +140 °F) Vertically mounted rail: • SIFLOW FC070 Standard: 0 … 45 °C (32 … 113 °F) • SIFLOW FC070 Ex CT: -40 … +45 °C (-40 … +113 °F)
Altitude	Operation: -1 000 … 2 000 m (pressure 795 … 1 080 hPa)
Enclosure	
Material	Noryl, color: anthracite
Rating	IP20/NEMA 2 according to IEC 60529
Mechanical load	According to SIMATIC standards (S7-300 devices)
Ex approvals	
• SIFLOW FC070 Standard	ATEX: II 3G Ex nA II T4
• SIFLOW FC070 Ex CT	ATEX, IECEx, EAC Ex, FM, CSA, INMETRO - Zone 2: Ex nA [ia] IIC T4 FM - Class I, Div. 2: Grp. A, B, C, D (interface to Class I+II+III, Div. 1)
Custody transfer approvals	
SIFLOW FC070 Ex CT	Compressed gaseous fuel measuring systems for vehicles NTEP for USA and Canada, approval no: 97-111A3
EMC performance	
Emission	EN 55011/CISPR-11
Immunity	EN/IEC 61326-1
Certification	
CE mark	Low voltage directive RoHS
NAMUR	Within the limits according to “General recommendations” with error criteria A in accordance with NE 21
Programming tools	
SIMATIC S7	Configuration through backplane P-BUS, PLC program and WinCC flexible
SIMATIC PCS7	Configuration trough backplane P-BUS and PLC/WinCC faceplates, certified driver
SIMATIC PDM	Through Modbus port RS 232C and RS 485, certified driver

© Siemens 2020

Selection and ordering data

Description	Article No.
SIFLOW FC070 flow transmitter Remember to order 40 pin front plug connector.	**7ME4120-2DH20-0EA0**
40 pin front plug with screw contacts	**6ES7392-1AM00-0AA0**
40 pin plug with spring contacts	**6ES7392-1BM01-0AA0**
SIFLOW FC070 Ex flow transmitter Remember to order 20 pin front plug connector.	**7ME4120-2DH21-0EA0**
20 pin front plug with screw contacts	**6ES7392-1AJ00-0AA0**
20 pin plug with spring contacts	**6ES7392-1BJ00-0AA0**

Operating instructions for SITRANS F C SIFLOW FC070

Description	Article No.
SIFLOW FC070 system manual	
• English	**A5E00924779**
• German	**A5E00924776**
SIFLOW FC070 with S7	
• English	**A5E02254228**
• German	**A5E02665536**
SIFLOW FC070 with PCS 7	
• English	**A5E03694109**

All literature is available to download for free, in a range of languages, at

www.siemens.com/processinstrumentation/documentation

Accessories

Description	Article No.	
Cable with multiplug for connecting MASS 2100, FCS200 and FC300 sensors, 5 × 2 × 0.34 mm² twisted and screened in pairs. Temperature range -20 °C ... +110 °C (-4 °F ... +230 °F)		
• 5 m (16.4 ft)	**FDK:083H3015**	
• 10 m (32.8 ft)	**FDK:083H3016**	
• 25 m (82 ft)	**FDK:083H3017**	
• 50 m (164 ft)	**FDK:083H3018**	
• 75 m (246 ft)	**FDK:083H3054**	
• 150 m (492 ft)	**FDK:083H3055**	
Cable without multiplug for connecting MC2 sensors, 5 × 2 × 0.34 mm² twisted and screened in pairs. Temperature range - 20 °C ... +110 °C (-4 °F ... +230 °F)		
• 10 m (32.8 ft)	**FDK:083H3001**	
• 25 m (82 ft)	**FDK:083H3002**	
• 75 m (246 ft)	**FDK:083H3003**	
• 150 m (492 ft)	**FDK:083H3004**	
SIMATIC S7-300 rail The mechanical mounting rack of the SIMATIC S7-300		
• 160 mm (6.3")	**6ES7390-1AB60-0AA0**	
• 482 mm (18.9")	**6ES7390-1AE80-0AA0**	
• 530 mm (20.8")	**6ES7390-1AF30-0AA0**	
• 830 mm (32.7")	**6ES7390-1AJ30-0AA0**	
• 2 000 mm (78.7")	**6ES7390-1BC00-0AA0**	
SIMATIC S7-300, stabilized power supply PS307 • Input: 120/230 V AC • Output: 24 V DC/2 A	**6ES7307-1BA01-0AA0**	

© Siemens 2020

Dimensional drawings

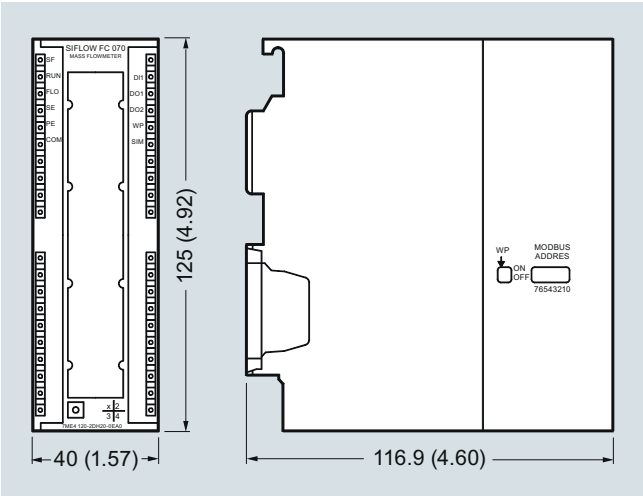

SIFLOW FC070, dimensions in mm (inch)

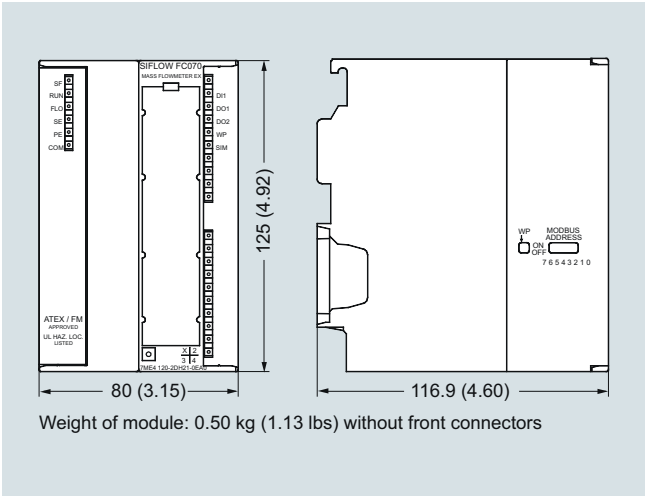

Weight of module: 0.50 kg (1.13 lbs) without front connectors

SIFLOW FC070 Ex CT, dimensions in mm (inch)

Circuit diagrams

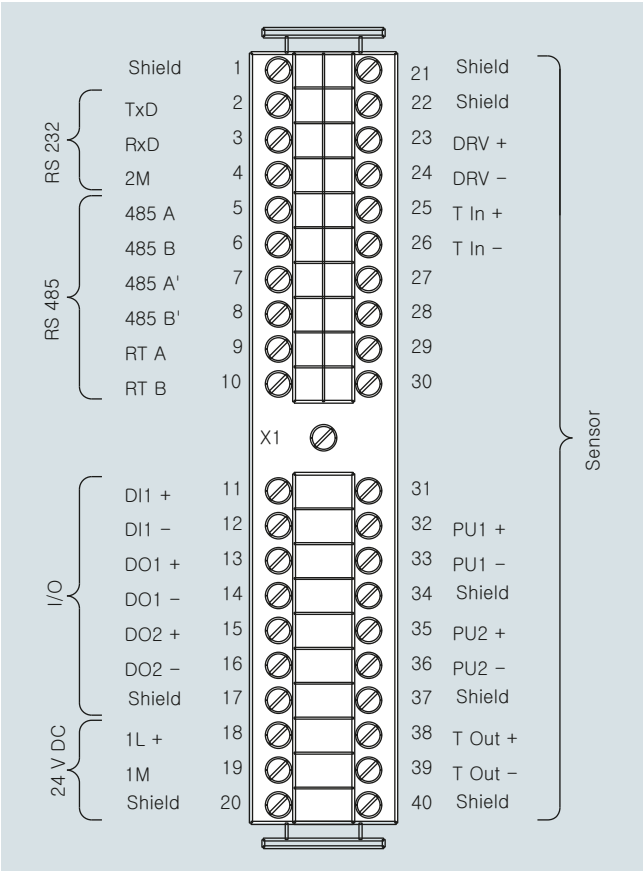

SIFLOW FC070, electrical connection

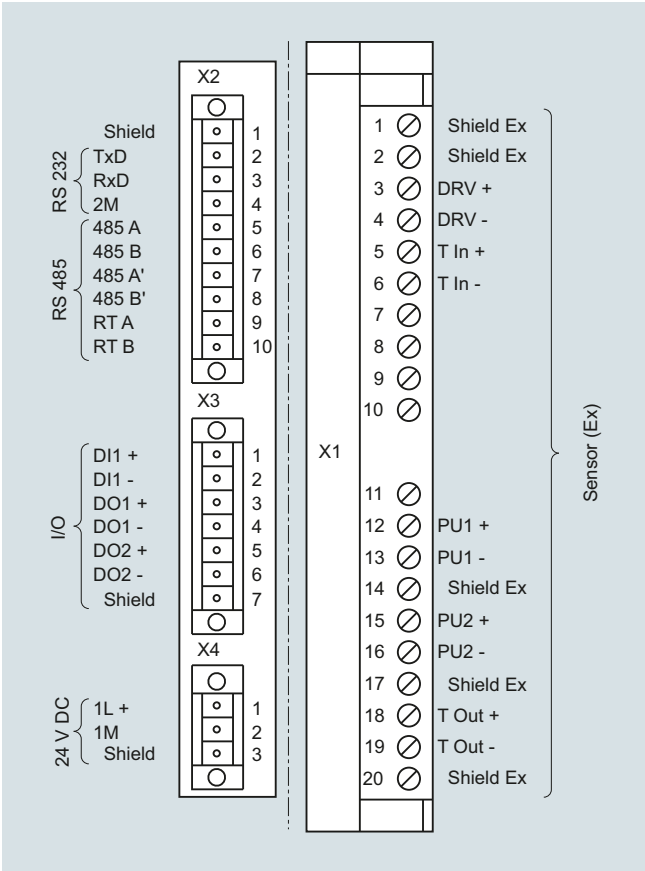

SIFLOW FC070 Ex CT, electrical connection

© Siemens 2020

Overview

Siemens offers two types of ultrasonic flowmeters, inline flowmeters and clamp-on flowmeters. This offers the end user the maximum flexibility to choose the technology that best fits his needs. This following chapter shows the inline versions.

SITRANS FS inline ultrasonic flowmeters measure flow of electrically conductive and non-conductive liquids.

Benefits

- Greater flexibility:
  - Sensor sizes from DN 50 to 1200 mm (2" to 48")
  - Inline retrofit as 1-path and 2-path up to DN 1200 mm (2" to 48")
  - Compact and remote transmitter installation
  - HART and PROFIBUS PA communication
  - Mains or battery powered solutions
  - Dedicated transmitter portfolio for HVAC, power generation, utility and general industry as well as more demanding applications
- Easier service:
  - Exchange of the transducers without interrupting operation
  - Battery lifetime of up to 6 years
- Approvals/certificates:
  - Custody transfer approvals within district heating
  - ATEX
  - Standard with calibration certificate

Application

Inline ultrasonic flowmeters are suitable for measuring the flow of liquids with good acoustic permeability, independent of conductivity, viscosity, temperature, density and pressure.

- max. 3 % solids
- max. 3 % air and gas
- max. 350 cSt

The main applications can be found in the following sectors:

- Raw water intake for water treatment plants
- Treated waste water
- Power generation and utility
- Irrigation systems
- Cooling water plants within the industry and in power stations
- Plants transporting non-conductive liquids
- Custody transfer - district heating (MID-004)
- HART/4 to 20 mA output
- PROFIBUS PA
- ATEX

© Siemens 2020

Application

Please see Product selector on the Internet, since some constrains might be related to some of the features: www.pia-portal.automation.siemens.com

	SONO 3300/ FUS060	SONO 3100/ FUS060	SONOKIT/ FUS060, FUS080	FUE380	FUS380
	7ME3300...	7ME3100...	7ME3210.../ 7ME3220...	7ME3410...	7ME3400...
Industry					
Water, treated waste water	**XXX**	**XX**	**XXX**		**XXX**
Irrigation	**XX**	**XX**	**XXX**		**XXX**
Utility, district heating water, cooling	**XXX**	**XX**	**XXX**	**XXX**	**XXX**
Utility, district heating, CT approvals required				**XXX**	
Cryogenic fluids (only on request)		**XXX**			
Onshore and Offshore applications	**XX**	**XXX**	**XX**		**X**
Design					
Compact transmitter mounted on pipe				•	•
Remote transmitter- Sensor up to 100 m	•	•	•	•	•
Transducers can be replaced under pressure		•	•		
Retrofit on existing steel pipes/non weldable			•		
Transmitter enclosure					
Polyamid, IP67			•	•	•
Die-cast aluminum (painted), IP65	•	•	•		
Communication					
HART	•	•	•		
PROFIBUS PA	•	•	•		
Power supply					
3.6 V Battery			•	•	•
115 … 230 V AC	•	•	•	•	•
115 … 230 V AC and 3.6 V battery backup			•	•	•
24 V AC/DC	•	•	•		
Accuracy					
0.25 % (4 path system on request)		•			
0.50 %	•	•	•	•	•
Sensor design					
1- path ultrasonic measurement		•	•		
2-path ultrasonic measurement	•	•	•	•	•
4-path ultrasonic measurement (special request)		•	•		
Dimension					
DN 50 2"	•			Die- cast bronze	Die- cast bronze
DN 65 2½"	•			Die- cast bronze	Die- cast bronze
DN 80 3"	•			Die- cast bronze	Die- cast bronze
DN 100 4"	•	•	1-path only	•	•
DN 125 5"	•	•	1-path only	•	•
DN 150 6"	•	•	1-path only	•	•
DN 200 8"	•	•	•	•	•
DN 250 10"	•	•	•	•	•
DN 300 12"	•	•	•	•	•
DN 350 14"		•	•	•	•
DN 400 16"		•	•	•	•
DN 500 20"		•	•	•	•
DN 600 24"			•	•	•
DN 700 28"			•	•	•
DN 800 32"			•	•	•
DN 900 36"			•	•	•
DN 1000 40"			•	•	•
DN 1200 48"			•	•	•

X = can be used, **XX** = often used, **XXX** = most often used, • = available

© Siemens 2020

Application (continued)

Please see Product selector on the Internet, since some constrains might be related to some of the features: www.pia-portal.automation.siemens.com

		SONO 3300/ FUS060	**SONO 3100/ FUS060**	**SONOKIT/ FUS060, FUS080**	**FUE380**	**FUS380**
		7ME3300...	**7ME3100...**	**7ME3210.../ 7ME3220...**	**7ME3410...**	**7ME3400…**
Process connection						
Flanges		•	•		•	•
Flangeless (for weld-in)			•			
Flanges norm						
EN 1092-1		•	•		•	•
EN 1759-1		•	•			
ANSI B16.5			•			
Pressure rating						
PN 6				•		
PN 10		•	•	•		
PN 16		•	•	•	•	•
PN 25			•	•	•	•
PN 40		•	•	•	•	•
Class 150		•	•			
Class 300		•	•			
Pipe, flange						
Carbon steel		•	•	•	•	•
Die cast bronze (DN 50, 65, 80)					•	•
Media temperature						
°C	°F					
-20	-4		•	•		
-10	+14	•	•	•		
+2	+35.6	•	•	•	Min. 5 °C (41 °F)	•
+60	+140	•	•	•	•	•
+120	+248	•	•	•	Compact	Compact
+150	+302	•	•	•	Die cast bronze	Die cast bronze
+160	+320	•	•	•	•	•
+190	+374		•	•	•	•
+200	+392		•	•	•	•
Measuring principle						
Transit time principle		•	•	•	•	•
Approvals						
Custody transfer approval						
MID, MI-004, EN 1434 (European energy meter standard)					•	
Other country-specific type approval available for:						
• Russia		•	•	•	•	•
• China (CPA/CMC)					•	
• Korea KC		•	•	•	•	•
Ex approval						
Ex d ATEX			•	•		
Ex i ATEX		•	•	•		

• = available

© Siemens 2020

Function

Physical principle (single path)

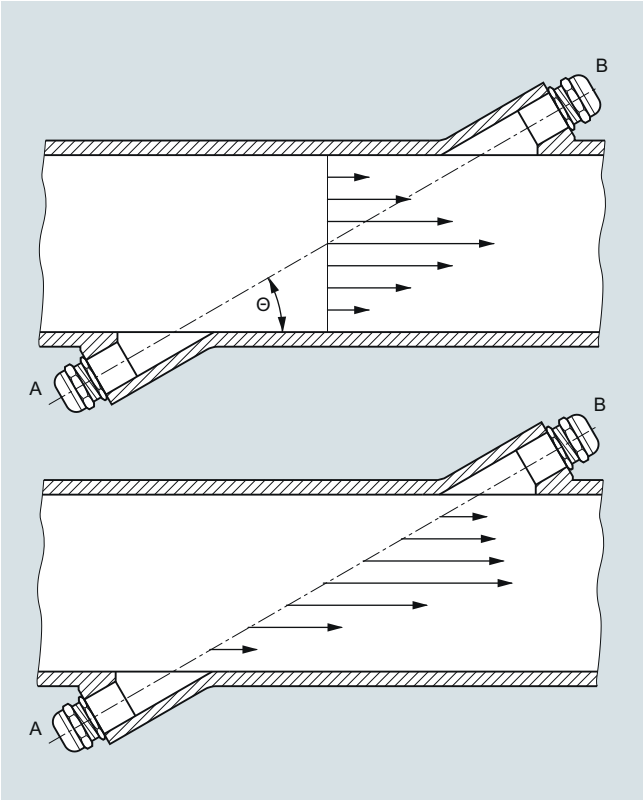

Velocity distribution along sound path

A sound wave traveling in the same direction as the liquid flow arrives at point B from point A in a shorter time than the sound wave traveling against the direction of flow (from point B to A). The difference in sound transit time indicates the flow velocity in the pipe.

Since delay time is measured at short intervals both in and against flow direction, viscosity and temperature have no influence on measurement accuracy.

Measuring principle

In SITRANS F US flowmeters the two ultrasonic transducers are placed at an angle θ in relation to the pipe axis. The transducers function as transmitters and receivers of the ultrasonic signals. Measurement is performed by determining the time the ultrasonic signal takes to travel with and against the flow. The principle can be expressed as follows:

$v = K \cdot (t_{B,A} - t_{A,B}) / (t_{A,B} \cdot t_{B,A}) = K \cdot \Delta t/t^2$

v = Average flow velocity
t = Transit time
K = Proportional pipe geometry factor

This measuring principle offers the advantage that it is independent of variations in the actual sound velocity of the liquid, i.e. independent of the temperature.
Proportional factor K is determined by wet calibration.

Direct signal processing

The ultrasonic signal is sent directly between the transducers. The advantage gained sending signals from point to point is an extremely good signal strength.

2-path solution

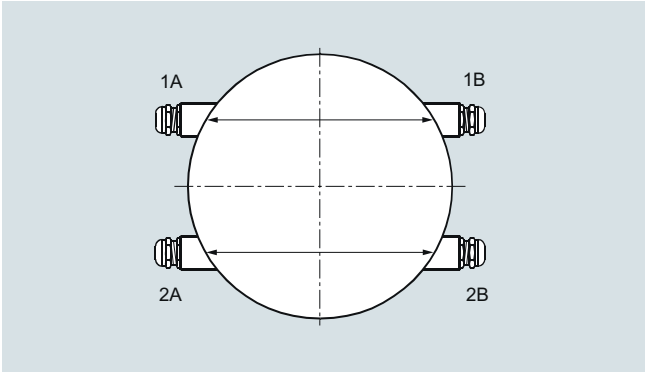

Ultrasonic 2-path flow meter with 4 transducers. In the upper path transducers 1A/1B and in the lower path 2A / 2B are displayed.

The accuracy of ultrasonic flowmeters depends on the pipe geometry before and after the flowmeter and the number of ultrasonic measuring paths.

When water flows through a pipe, it has a tendency to swirl and/or flow with different velocities inside the pipe, depending on the pipe design.

A 2-path ultrasonic flowmeter offers:

- less sensitivity to upstream obstruction like bends, pumps or valves.
- high security in the measurements as the meter continues to measure even if, for some reason, one path stops working.

Typical straight inlet requirements are upstream 10 x D_i (D_i = diameter of the flowmeter) and downstream 3 x D_i.

Typical accuracy that can be reached with 2-path ultrasonic flowmetering is ± 0.5 % with installations according to above demands.

© Siemens 2020

Technical specifications

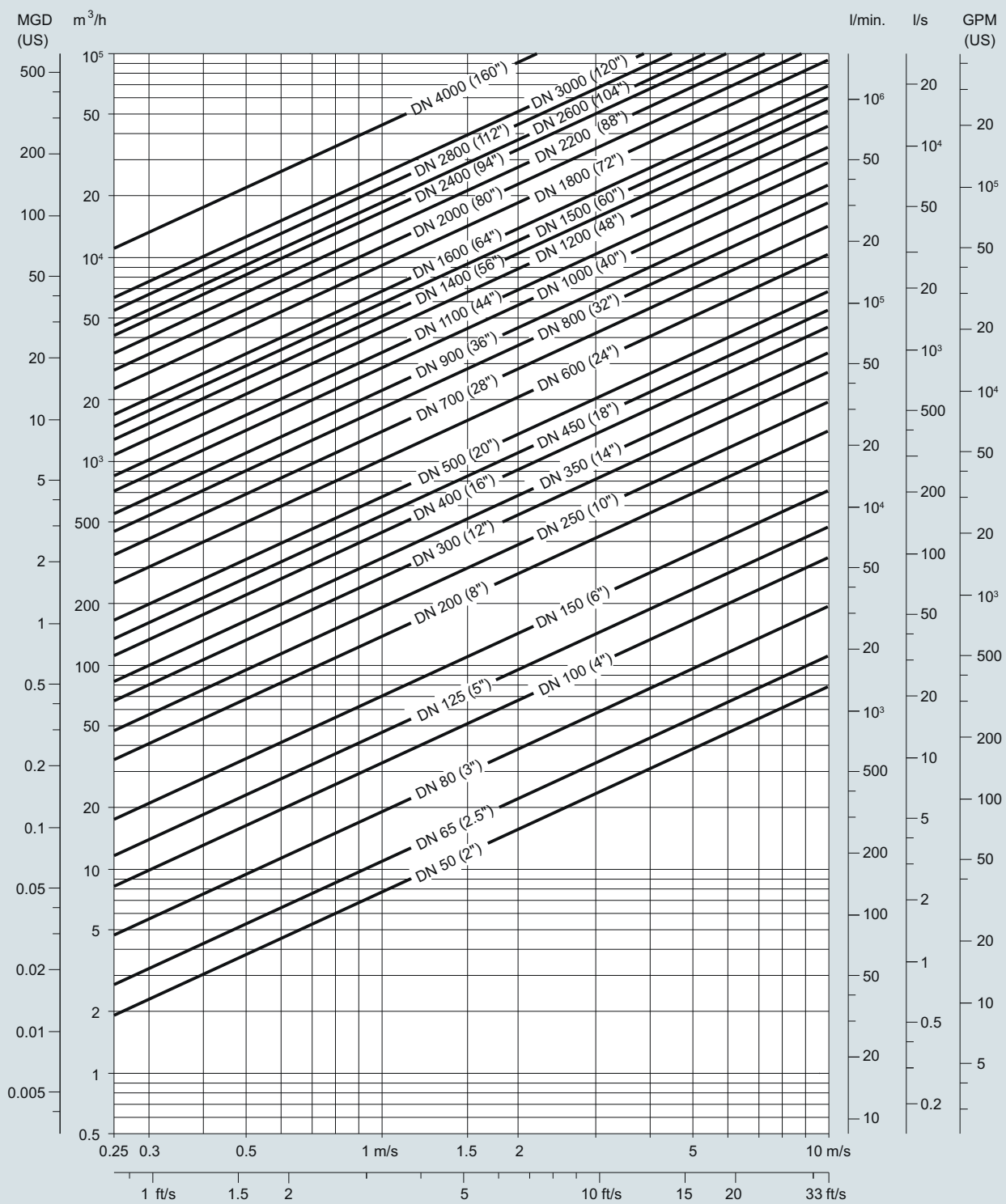

Nominal size and flow

© Siemens 2020

Technical specifications (continued)

Guidelines for selection of sensor

- Min. measuring range: 0 … 1 m/s
- Max. measuring range: 0 … 10 m/s

Nominal flow velocity:

- Normal: 1 … 3 m/s
- Minimum: not permanently below 0.5 m/s
- Maximum: up to 8 m/s

Flow velocity calculation formula:

- $v = (4 \times Q_{max}) / (\pi \times D_i^2 \times 3600)$
- v in m/s, Q_{max} in m^3/h, D_i in m

Additional to the flow velocity check it is recommended to observe the Reynolds number (Re):

The optimal performance of the flowmeter is with a Re above 10 000, which is typical for flow velocities (water) above 0.5 m/s. Avoid an Re value between 2000 and 5000. In order to observe this and to be above the recommended 0.5 m/s flow velocity limit the sensor size must be reduced.

Re formula: Re = V x Di / Viscosity

V in m/s, Di in m, Viscosity in cSt (X x E^{-6} m^2/s)

Example: Viscosity for water at 20 °C = 1 x E^{-6} m^2/s

Inlet and outlet conditions

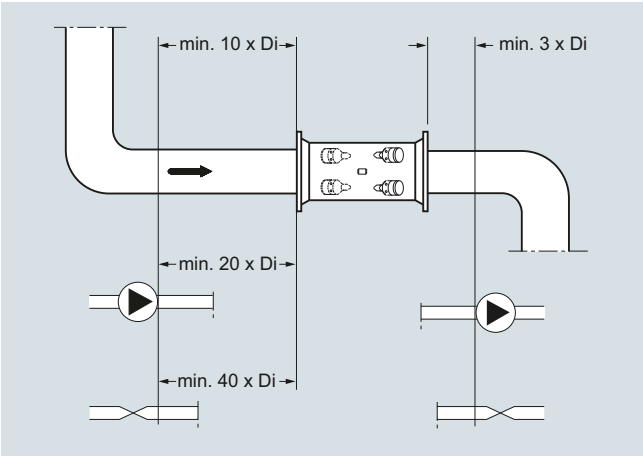

Recommended inlets and outlets

To maximize performance inlet and outlet must be straight. There must be a certain distance between flowmeter and bends, pumps and valves. It is also important to centre the flowmeter in relation to pipe flanges and gaskets.

Valves must always be installed after the flowmeter. The only exception is installation of the sensor in a vertical pipe. In this case a valve below the sensor is necessary to allow zero point adjustment. It is important to select a valve which does not alter the flow when fully open.

Recommended inlet/outlet	SONO 3300, SONO 3100, SONOKIT 2-path	FUS380/ FUE380[1)]	SONOKIT 1-path
90° bend	10 x D_i	10 x D_i	20 x D_i
Fully opened valve	10 x D_i	10 x D_i	20 x D_i
Partially opened valve	40 x D_i	40 x D_i	40 x D_i
2 x 90° bends in same plane	15 x D_i	15 x D_i	25 x D_i
2 x 90° bends in two planes	20 x D_i	20 x D_i	40 x D_i
Reductions (Outlet 0 x D_i)	10 x D_i	10 x D_i	20 x D_i
Pumps	20 x D_i	20 x D_i	40 x D_i
Outlet	3 x D_i	3 x D_i	3 x D_i

1) Inlet for FUE380 approved systems: Minimum straight inlet pipe: 1.5 m, but note further recommendations above.

Reductions

The flowmeter can be installed between two reducers (e.g. DIN 28545). At 8° the pressure drop curve below applies.

Example:

A flow velocity of 3 m/s (V) in a sensor with a diameter reduction from DN 250 to DN 200 (d_1/d_2 = 0.8) gives a pressure drop of 3 mbar.

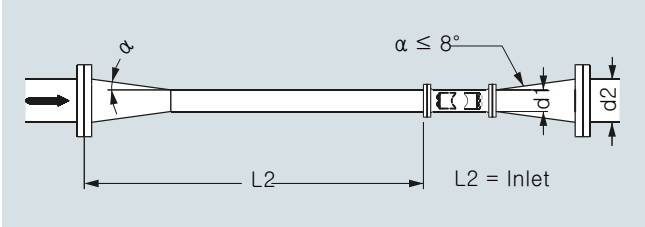

© Siemens 2020

Technical specifications (continued)

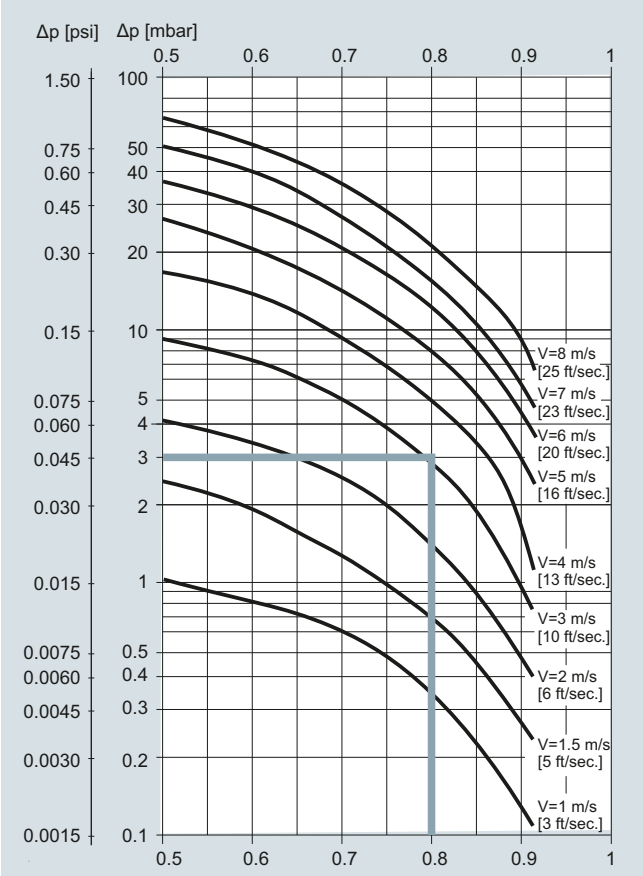

The sensor must always be completely filled with liquid:

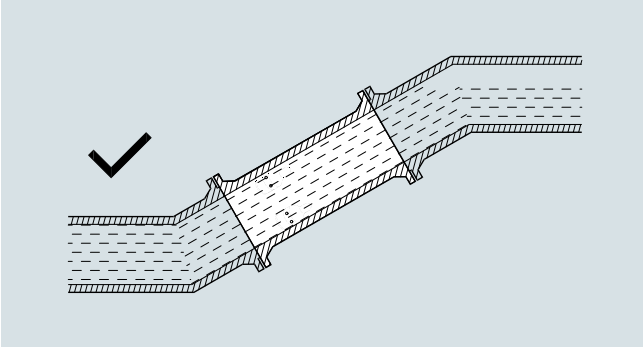

The following installations must be avoided:

- Installation at the highest point of the pipe system
- Installation in vertical pipes with free outlet

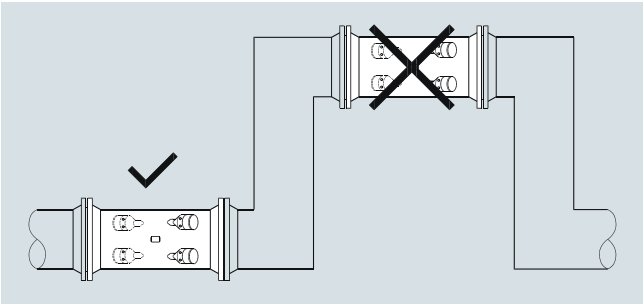

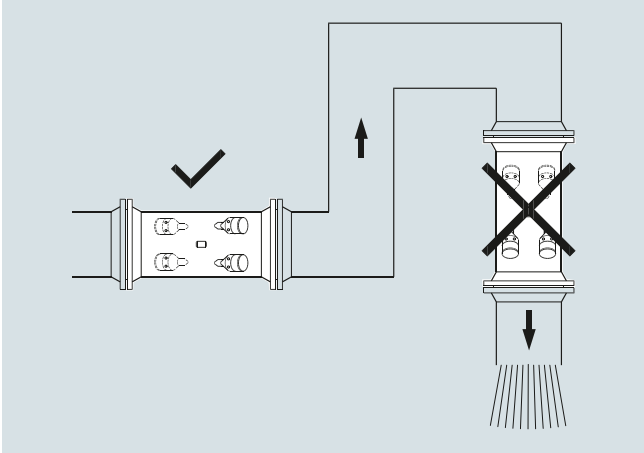

With partially full pipes or pipes with free outlet the flowmeter should be located in a U-shaped tube:

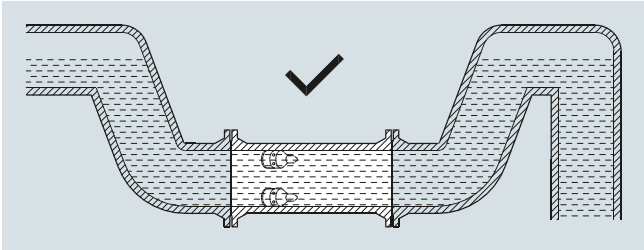

Installing the transducers in horizontal position is recommended:

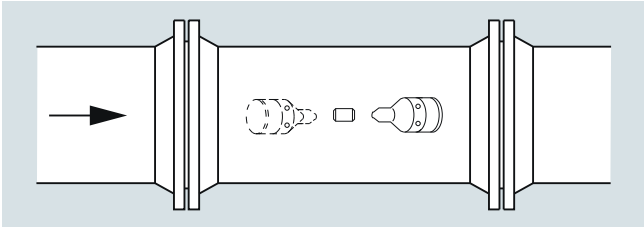

© Siemens 2020

Technical specifications (continued)

Pressure/temperature curve to EN (DIN) flanges

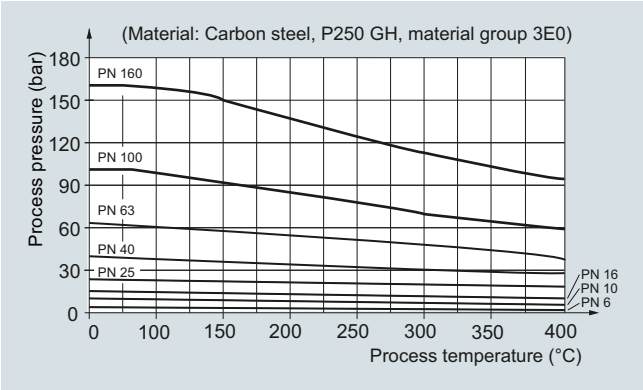

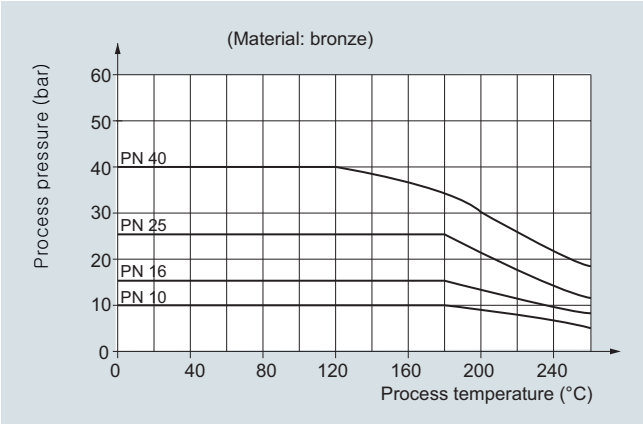

Pressure/temperature curve to ANSI B16.5 flanges

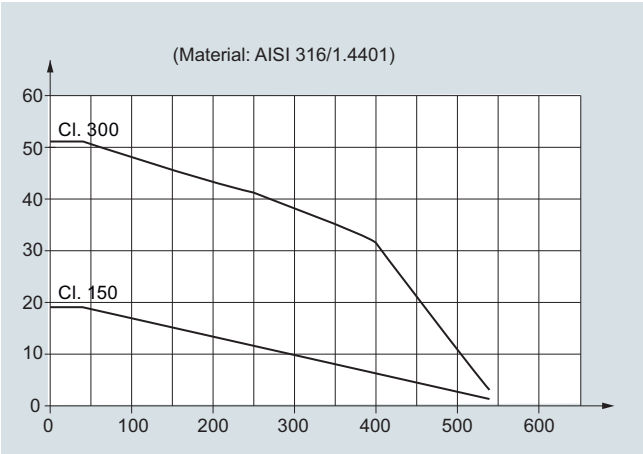

Note: The pressure/temperature curves only assist in the selection of a system. No responsibility is taken for the correctness of the information. For exact data please refer to the PED requirements.

Reference conditions

To ensure continuous accurate measurement, flowmeters must be calibrated. The calibration is conducted at Siemens flow facilities with traceable instruments referring directly to the physical unit of measurement according to the International System of Units (SI).

Therefore the calibration certificate ensures recognition of the test results worldwide, including the US (NIST traceability).

Siemens offer accredited calibrations assured to ISO 17025. Siemens Flow Instruments accredited laboratories are recognized by ILAC MRA (International Laboratory Accreditation Corporation - Mutual Recognition Arrangement) ensuring international traceability and recognition of the test results worldwide.

Flowmeter calibration data are stored in the internal EEPROM of the transmitter FUS060 or FUS080.

The system accuracy refers to the following systems:

SONO 3300/FUS060, SONO 3100/FUS060[1] which are typically calibrated on the frequency output.

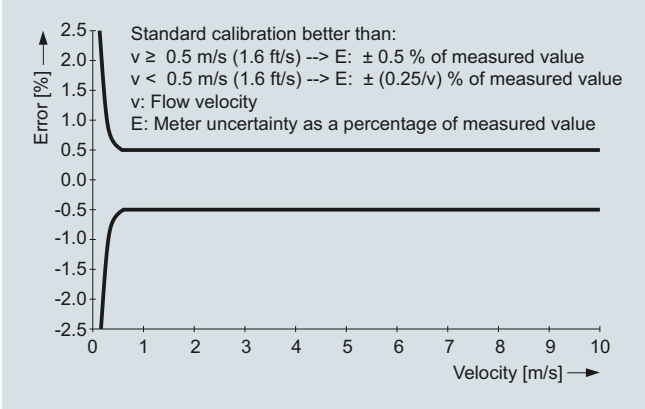

Typical calibration reference conditions:	
Fluid	Water
Fluid temperature	22 ± 5 °C
Ambient temperature	22 ± 5 °C
Supply voltage	115/230 V AC +10 … -15 % DC 24 V +25 … -15 %, AC 24 V ± 15 %
Straight inlet length	20 x D_i
Outlet	3 x D_i
Rangeability	0 … 1 m/s to 0 … 10 m/s
Repeatability	Better than 0.25 % in the range 0.5 … 10 m/s
Linearity (for water)	
• Reynolds number 1000 < Re < 5000	Better than 1 %
• Reynolds number > 5000	Better than 0.5 %

[1] Only systems with transmitter FUS060. For systems with transmitter FUS080 see the sections FUS380 and FUE380.

Additional effects of deviations from reference conditions

- Current output: As frequency output (± 0.1 % of actual flow +0.05 % FSO)
- Effect of ambient temperature: Frequency/pulse output: < 0.005 % SPAN/K; Current output: < ± 0.0075 % SPAN/K
- Effect of supply voltage: 0.005 % of measuring value at 1 % change

© Siemens 2020

Overview

SITRANS FUS060 is a transit time based transmitter designed for ultrasonic flowmetering with dedicated sensors in the FUS inline series up to DN 500. SITRANS FUS060 is engineered for high performance and is suitable for 1- and 2-path flowmeters.

Benefits

- Superior signal resolution for optimum turn down ratio
- Simple menu-based local operation with two-line display and four optical input elements, for unlimited use in potentially explosive atmospheres
- Self-monitoring and diagnostic
- Operate up to 2 paths
- ATEX II G Ex dem [ia/ib] IIC T6/T4/T3 Gb
- Remote installation up to 120 m from sensor
- 1 analog output (4 to 20 mA) standard with HART-protocol, 1 digital frequency or pulse output, 1 relay output for limit, alarms, flow direction
- PROFIBUS PA Profile 2, 1 digital frequency or pulse output

Application

The main application for flowmeters with the transmitter SITRANS FUS060 is measurement volume of water and waste water.

Design

The transmitter type FUS060 is designed for remote installation in non-hazardous or hazardous areas.

The transmitter is designed for use in a flowmeter system together with sensors type SONOKIT, SONO 3300 and SONO 3100.

The FUS060 is ordered as part of a complete flowmeter system. It can be ordered separately as spare part and manually programmed with the sensor data.

Function

Displays and keypad

Operation of the SITRANS FUS060 transmitter can be carried out using:

- Keypad and display unit
- HART communicator
- PC/laptop and SIMATIC PDM software via HART communication
- PC/laptop and SIMATIC PDM software using PROFIBUS PA communication

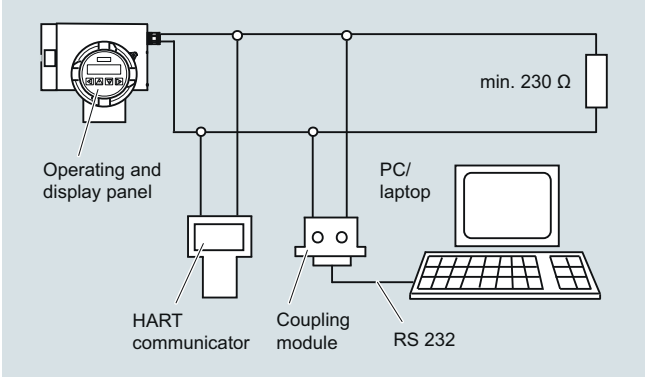

HART communication

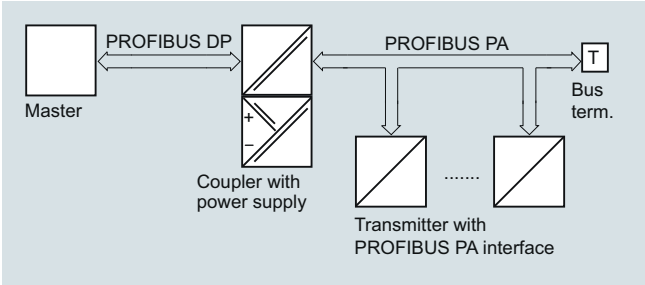

PROFIBUS PA communication

The operating and display panel permits simple operation without supplementary equipment. It is not necessary to open the housing. All changes to a setting can therefore also be carried out in the potentially explosive atmosphere.

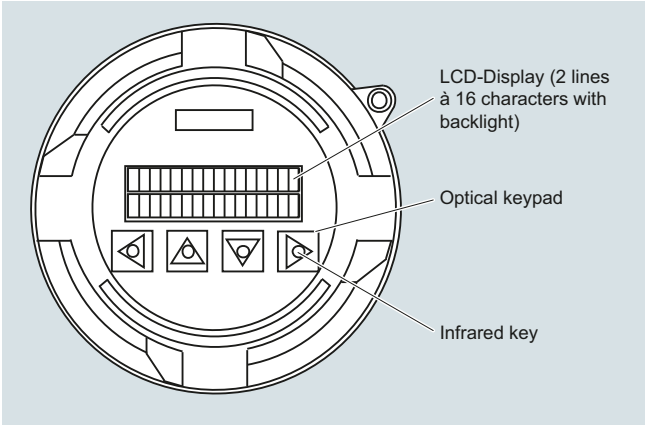

Operating and display panel

© Siemens 2020

Function (continued)

The individual functions and parameters are selected using a hierarchical, multi-language input menu and four infrared keys. The parameters can be specifically selected and modified using codes, e.g.:

- Operating parameters such as measuring range, physical dimensions, device information
- Limits for flow, totalizer, ultrasonic velocity or ultrasonic amplitude
- Noise suppression using damping, error stages and hysteresis
- Display parameters (freely-configurable display)
- Display in volume or mass dimensions
- Density as constant input value for conversion of volume into mass dimensions
- Forward/backward measurement
- Flow direction
- Diagnostics functions and control values
- Functions of the PROFIBUS PA output:
  flow, net quantity (volume or mass), ultrasonic velocity, ultrasonic amplitude, forward quantity (volume or mass), backward quantity (volume or mass)
- Functions of the analog output:
  flow, ultrasonic velocity or ultrasonic amplitude
- Functions of digital output 1:
  pulse output, frequency output, limit, flow direction or device status
- Functions of digital output 2:
  limit, flow direction or device status
- Simulation of output signal via analog output, digital output 1 and digital output 2

The HART protocol is implemented via the analog output (current output). Using this communication facility, the device can be parameterized with a PC/laptop and SIMATIC PDM software in addition to local operation.

In the version with PROFIBUS PA, the analog output is replaced by the digital PROFIBUS PA output. The device can then be parameterized via PROFIBUS communication and with SIMATIC PDM in addition to local operation.

Integration

The transmitter output is often used as input for an automation system or as input for systems of remote reading.

The SITRANS FUS060 transmitter offers current, pulse and relay outputs as standard output functions and supports HART or Profibus PA communication.

The settings of the transmitter output functions are individually programmed via keypad and display menu.

© Siemens 2020

Technical specifications

Input	
Measurement	Flow by measuring the transit time difference of ultrasonic signals through ultrasonic transducers in DN 100 ... 500 (4 ... 20") 2-path sensor pipes: 1-path or 2-path
Nominal sizes and number of paths	2-path DN 100 ... 500 (4 ... 20")
Max. cable length	20 m (395 ft) (shielded coaxial cable). For Ex version the transducer cable length is restricted to 3 m (9.84 ft) in order to meet requirements for electrical immunity.
Analog output	
Function	Current output programmable for flow, sound velocity or amplitude level. Active current output (13.2 V < open loop voltage < 15.8 V)
• Signal range	4 … 20 mA
• Upper limit	20 … 22.5 mA, adjustable
• Signal on alarm	3.6 mA, 22 mA, or 24 mA
• Load	Max. 600 Ω; for non Ex version ≤ 230 Ω for HART communication ≤ 330 Ω for Ex-version
• Only PROFIBUS PA version:	Analog output omitted, is replaced by digital PROFIBUS PA interface
Digital output 1	
Function	Pulse, frequency or status output - programmable for pulses, frequency, alarm, limit or status.
• Active or passive signal, can be configured with positive or negative logic	Active: 24 V DC, ≤ 24 mA, R_i = 300 Ω Passive: open collector, 30 V DC, ≤ 200 mA
• For explosion protection (ATEX version) and PROFIBUS PA version	Only passive: open collector 30 V DC, ≤ 100 mA
• Output function, configurable	Pulse output • Adjustable pulse significance ≤ 5 000 pulses/s • Adjustable pulse width ≥ 0.1 ms Frequency response • f_{END} selectable up to 10 kHz Limit for flow, totalizers, ultrasonic velocity or ultrasonic amplitude device status, flow direction

Digital output 2	
Function	Relay output - programmable for alarm, limit or status indication.
• Relay, NC or NO contact	Switching capacity max. 5 W Max. 50 V DC, max. 200 mA DC Self-resetting fuse, R_i = 9 Ω
• For explosion protection (ATEX version)	Max. 30 V DC, max. 100 mA DC, 50 mA AC (cf. EC-Type Examination certificate)
• Output function, configurable	Limit for flow, ultrasonic velocity or ultrasonic amplitude flow direction device status
• Only PROFIBUS PA version:	Digital output 2 omitted
Communication via analog output 4 … 20 mA	
• PC/laptop or HART communicator with SITRANS F flowmeter	
- Load with connection of coupling module	min. 230 Ω (max. 330 Ω for Ex-version)
- Load with connection of HART communicator	min. 230 Ω
- Cable	2-wire shielded ≤ 3 km (≤ 1.86 miles) Multi-core shielded ≤ 1.5 km (≤ 0.93 miles)
- Protocol	HART, version 5.1
Communication via PROFIBUS PA interface	Layers 1 + 2 according to PROFIBUS PA Communication system according to IEC 61158/EN 50170
• Power supply	Separate supply, four-wire device Permissible bus voltage 9 … 32 V See certificates and approvals
• Current consumption from bus	10 mA; ≤ 15 mA in event of error with electronic current limiting
Electrical isolation	Outputs electrically isolated from power supply and from another
Accuracy	
Error in measurement (at reference conditions)	
• Pulse output	≤ ± 0,5 % of measured value at 0,5 … 10 m/s or ≤ ± 0,25/V[m/s]% of measured value at flow < 0,5 m/s
• Analog output 4 ... 20 mA	As pulse output plus ± 0.1 % of measured value, ± 20 µA
• Repeatability	≤ ± 0,25 % of measured value at 0.5 … 10 m/s
Reference conditions (water)	
• Process temperature in the connected sensor	25 °C ± 5 °C (77 °F ± 9 °F)
• Ambient temperature at the transmitter	25 °C ± 5 °C (77 °F ± 9 °F)
• Transmitter warming-up time	30 min.

© Siemens 2020

Technical specifications (continued)

Rated operation conditions	
Ambient conditions	
Ambient temperature	
• Operation	-20 … +50 °C (-4 … +122 °F)
• In potentially explosive atmospheres	Observe temperature classes
• Storage	-25 … +80 °C (-13 … +176 °F)
Enclosure rating	IP65 (NEMA 4)
Electromagnetic compatibility	For use in industrial environments
• Emitted interference	To EN 55011 / CISPR-11
• Noise immunity	To EN/IEC 61326-1 (Industry)
Medium conditions	The measuring media must be ultrasonic signal compatible. It must be homogeneous and not two-phased to transfer the acoustic ultrasonic signals.
• Process temperature	-200 … +250 °C (-328 … +482 °F) (not directly influenced by medium temperature)
• Gases/solids	Influence accuracy of measurement (approx. max. 3 % gases or solids)
Design	
Separate version	Transmitter is connected to the transducers via 3 … 120 m (9.8 ft … 395 ft) long specially shielded cables (coaxial cable) For ATEX versions mounted in the Ex area only with 3 m (9.8 ft) long cables.
Enclosure material	Die-cast aluminium, painted
Wall mounting bracket (standard and special)	Stainless steel (standard: always incl.)
Weigth of transmitter	4.4 kg (9.7 lb)
Electrical connection	Cable glands (always incl.) • Power supply and outputs - 2 x M20 (HART)/M25 (PROFIBUS) or 2 x ½"-NPT (HART) • Transducers/sensor - 2/4 x M16 or 2/4 x ½"-NPT
Display and controls	
Display	LCD, two lines with 16 characters each
• Multi-display: 2 freely-selectable values are displayed simultaneously in two lines	Flow, volume, mass flow, mass, flow velocity, speed of sound, ultrasonic signal information, current, frequency, alarm information
Operation	4 infrared keys, hierarchical menu shown with codes
Power supply	
Supply voltage	
• Standard version	120 … 230 V AC ± 15 % (50/60 Hz) or 19 … 30 V DC/21 ... 26 V AC
• Ex version	19 … 30 V DC/21 … 26 V AC
Power failure	No effect for at least 1 period (> 20 ms)
Power consumption	Approx. 10 VA/10 W
Certificates and approvals	
Explosion protection	ATEX II 2 G Ex dem [ia/ib] IIC T6/T4/T3 Gb T6 for media < 85 °C (185 °F) T5 for media < 100 °C (212 °F) T4 for media < 135 °C (275 °F) T3 for media < 200 °C (392 °F)

Coaxial cable		
Standard Coaxial cable (75 Ω)	Coaxial cable with SMB straight plug on one end for connection to the FUS060 Pre-terminated, can be shortened on sensor side	
Outside diameter	Ø 5.8 mm	
Length	3, 15, 30, 60, 90, 120 m (9.84, 49.21, 98.43, 196.85, 295.28, 393.70 ft) between sensor and transmitter	
Material (outside jacket)	black PE	
Ambient temperature	-10 … +70 °C (14 … 158 °F)	
High temperature Coaxial cable (75 Ω)	Coaxial cable with SMB straight plug on one end for connection to the FUS060	
Outside diameter	Ø 5.13 mm (first 0.3 m (0.98 ft) part to the transducer), Ø 5,8 mm (for remaining cable to the transmitter – with SMB plug at the end) and between these is a black hot melt junction Ø 16 mm (length 70 mm) Fix terminated, can NOT be shortened	
Length	3, 15, 30 m (9.84, 49.21, 98.43 t) between sensor and transmitter (max. 3 m (9.84 ft)) transducer cable length for Ex area mounted transmitters)	
Material (outside jacket)	Brown PTFE (0.3 m (0.98 ft) part) and black PE (for remaining cable)	
Ambient temperature	-200 … +200 °C (-328 … +392 °F) (brown PTFE transducer part) and -10 … +70 °C (14 … 158 °F) (black PE for remaining transmitter cable part)	

© Siemens 2020

Selection and ordering data

Transmitter FUS060 operating instructions, accessories and spare parts

Operating instructions

Description	Article No.
• English	**A5E01204521**
• German	**A5E02123845**

Al literature is available to download for free, in a range of languages, at
https://www.siemens.com/processinstrumentation/documentation

Accessories

Description	Article No.	
Standard wall mounting bracket	**7ME5933-0AC04**	
Special wall-/pipe mounting bracket kit	**7ME5933-0AC05**	
Safety clamp for electronic cover with glass plate (7ME5933-0AC01)	**7ME5933-0AC06**	
Process Device Manager SIMATIC PDM		
SIMATIC PDM For more details about SIMATIC PDF please go to chapter 8 "Digitalization and Communication".	**See the Selection and Ordering data on chapter 8 "Digitalization and Communication"**	
HART modem for communication with FUS060 HART, PC and SIMATIC PDM		
HART modem With USB connection	**7MF4997-1DB**	

Spare parts

SITRANS FUS060 transmitter, available standard and Ex versions

The transmitter configuration is made in the flowmeter order codes (together with the sensors).
The information below is for spare part ordering only and with fixed standardized pre-settings for a DN 2000 2-path system.

Description	Version	Enclosure	Supply	Article No.	
FUS060, 230 V, HART, Metric cable glands	Transmitter for remote connection	IP65 (NEMA 4)	115 … 230 V AC 50/60 Hz	**7ME3050-2BA10-1BA1**	
FUS060, 230 V, HART, Imperial cable glands	Transmitter for remote connection	IP65 (NEMA 4)	115 … 230 V AC 50/60 Hz	**7ME3050-2BA10-1BA2**	
FUS060, 230 V, PROFIBUS, Metric cable glands	Transmitter for remote connection	IP65 (NEMA 4)	115 … 230 V AC 50/60 Hz	**7ME3050-2BA10-1DA1**	
FUS060, 230 V, PROFIBUS, Imperial cable glands	Transmitter for remote connection	IP65 (NEMA 4)	115 … 230 V AC 50/60 Hz	**7ME3050-2BA10-1DA2**	
FUS060, 24 V, HART, Metric cable glands	Transmitter for remote connection	IP65 (NEMA 4)	19 … 30 V DC/ 21 … 26 V AC	**7ME3050-2BA20-1BA1**	
FUS060, 24 V, HART, Imperial cable glands	Transmitter for remote connection	IP65 (NEMA 4)	19 … 30 V DC/ 21 … 26 V AC	**7ME3050-2BA20-1BA2**	
FUS060, 24 V, PROFIBUS, Metric cable glands	Transmitter for remote connection	IP65 (NEMA 4)	19 … 30 V DC/ 21 … 26 V AC	**7ME3050-2BA20-1DA1**	
FUS060, 24 V, PROFIBUS, Imperial cable glands	Transmitter for remote connection	IP65 (NEMA 4)	19 … 30 V DC/ 21 … 26 V AC	**7ME3050-2BA20-1DA2**	
FUS060, ATEX, 24 V, HART, Metric cable glands	Transmitter for remote connection	IP65 (NEMA 4) ATEX approval	19 … 30 V DC/ 21 … 26 V AC	**7ME3050-2BA21-1CA1**	

Ordering of pre-configured FUS060 spare transmitters only via PVR (product variation request - special request).

© Siemens 2020

Selection and ordering data (continued)

Description	Article No.	
Operating/Display module	**7ME5933-0AC00**	
Electronics cover with glass plate (non Ex). Die cast aluminum, with corrosion-resistant Basic Polyester powder coating (min. 60 µm)	**7ME5933-0AC01**	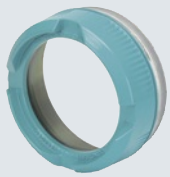
Cover for sensor cable and gasket. Die cast aluminum, with corrosion-resistant Basic Polyester powder coating (min. 60 µm)	**7ME5933-0AC02**	
Cover for mains supply/communication. Die cast aluminum, with corrosion-resistant Basic Polyester powder coating (min. 60 µm)	**7ME5933-0AC03**	
FUS060 Sensor connection PCBA, Standard versions only, 1 pc.	**A5E02551331**	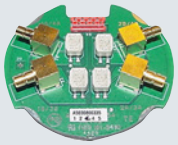
FUS060 Sensor connection PCBA, ATEX version only, 1 pc.	**A5E02551334**	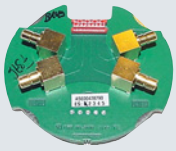
M20 cable gland set for FUS060 (M20) power and output connection, grey PA plastic, 2 pcs. • cables Ø 6 … 12 mm (0.24" … 0.47") • -40 … +100 °C (-40 … +212 °F)	**A5E02246350**	
M20 cable gland set for FUS060 ATEX version power and output connection, PA plastic, 1x in blue (ATEX Ex i) and 1x grey (ATEX Ex-e) • cables Ø 5 … 9 mm (0.20" … 0.35") • -20 … +95 °C (-4 … +203 °F)	**A5E02246356**	
1/2" NPT cable gland set for FUS060 (NPT) power and output connection, grey PA plastic, 2 pcs. • cables Ø 6 … 12 mm (0.24" … 0.47") • -40 … +100 °C (-40 … +212 °F)	**A5E02246396**	

Description	Article No.	
M25 cable gland set for the FUS060 PA (M25) power and output connection, prey PA plastic, 2 pcs. • cables Ø 9 … 16 mm (0.35" … 0.63") • -40 … +100 °C (-40 … +212 °F)	**A5E02246378**	
M16x1.5 cable gland set for FUS060 (M16) sensor connection, gray PA plastic, 2 pcs. and 2 pcs. blind. • cables Ø 5 … 9 mm (0.20" … 0.35") • -40 … +100°C (-40 … +212 °F)	**A5E02593526**	
M16 x 1.5 cable gland set for FUS060 (M16) sensor connection, brass chrome, 2 pcs. and 2 pcs. blind • cables Ø 5 … 9 mm (0.20" … 0.35") • -20 … +105 °C (-4 … +221 °F)	**A5E02246369**	
½" NPT cable gland set for FUS060 (NPT) sensor connection, 4 pcs. M16 bush to ½" NPT and 4 pcs. ½" NPT prey PA plastic glands • cables Ø 5 … 9 mm (0.20 … 0.35") • -20 … +100 °C (-4 … +212°F)	**A5E02247877**	

Cables for FUS060

Description	Article No.	
Coaxial cable for FUS060, (75 Ω, max. 70 °C (158 °F), black PVC), (2 pcs.)		
• 3 m (9.84 ft)	**A5E00875101**	
• 15 m (49.21 ft)	**A5E00861432**	
• 30 m (98.43 ft)	**A5E01278662**	
• 60 m (196.85 ft)	**A5E01278682**	
• 90 m (295.28 ft)	**A5E01278687**	
• 120 m (393.70 ft)	**A5E01278698**	
High temp. coaxial cable for FUS060; with 0.3 m brown PTFE high temp. transducer part, max. 200 °C (392 °F) and black PVC for remaining transmitter part with SMB plug, max. 70 °C (158 °F); impedance 75 Ω,(2 pcs.)		
• 3 m (9.84 ft)	**A5E00875105**	
• 15 m (49.21 ft)	**A5E00861435**	
• 30 m (98.43 ft)	**A5E01196952**	
Special coaxial cable sets for low temperature cryogenic systems; with SMB plug for transmitter SITRANS FUS060, PTFE material, temp. -200 … +200 °C (-328 … +392 °F), impedance 75 Ω, (2 pcs.)		
• 10 m (32.84 ft)	**A5E02085593**	
• 15 m (49.21 ft)	**A5E03262088**	
• 30 m (98.43 ft)	**A5E02085644**	
• 40 m (131.23 ft)	**A5E02085649**	

© Siemens 2020

Dimensional drawings

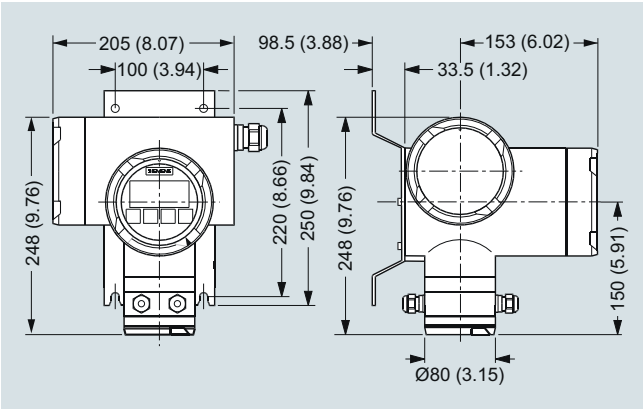

SITRANS FUS060 with standard mounting bracket, dimensions in mm (inch)

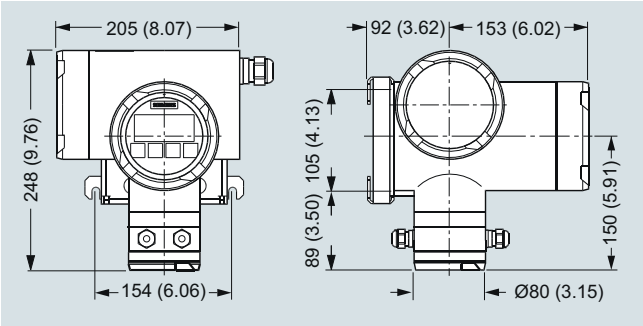

SITRANS FUS060 with optional special mounting bracket, dimensions in mm (inch)

Circuit diagrams

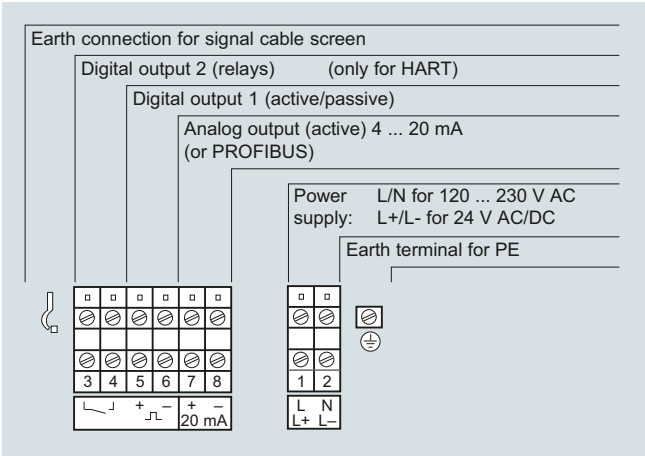

Electrical connection SITRANS FUS060

© Siemens 2020

Overview

SITRANS FUS080 is a transit time based transmitter designed for ultrasonic flow metering with any sensor in the FUS inline series SONOKIT, FUS380 and FUE380 up to DN 1200.

The ultrasonic flowmeter transmitter SITRANS FUS080 comes as battery or mains powered version. The SITRANS FUS080 is designed to measure flow water applications.

The SONOKIT retrofit flowmeter series are shown from page 3/282. The standard flowmeter series SITRANS FUS380 is described from page 3/292. The type approved flowmeter series for flow metering in energy meter custody transfer systems are named SITRANS FUE380.

Benefits

- Battery-powered up to 6 years
- 115/230 V mains-powered with back-up battery option in case of mains power failure
- Fast measuring frequency 15 Hz/0.5 Hz (230 V AC/Battery)
- Easy one button straight forward display
- IrDA optical interface for local communication
- 2-path measuring principle for optimum accuracy
- Compact or remote mounting
- Measures on all district water qualities and water conductivities
- No pressure drop
- Long-term stability
- 2 galvanic isolated digital outputs for easy connection to a calculator (potential free)
- 1 analog 4 to 20 mA output
- Bidirectional measurement, with 2 totalizers and outputs
- Dynamic range Q_i (min) : Q_s (max) up to 1:400
- Compact version with triax cables for highest EMC-protection

Application

The main application for flowmeters with the transmitter SITRANS FUS080 is measurement of water flow in district heating plants, local networks, boiler stations, substations, chiller plants, irrigations plants and other general water applications.

Design

The transmitter type SITRANS FUS080 is designed with fiberglass reinforced polyamide enclosure for remote or compact installation in normal areas. The remote versions are available with up to 30 meter distance from flowmeter to transmitter. When ordering as a compact version in the series FUS380 and FUE380 the transducer cables are pre-mounted at the sensor.

The transmitter is available in an IP67/NEMA 4X/6 enclosure and is designed for use in the flowmeters series:

- SONOKIT (1-path or 2-path)
- FUS380 (2-path)
- FUE380 (2-path)

The transmitter FUS080 is always ordered as part of a complete flowmeter system.

It can be manually ordered separately as spare part preprogrammed with the given sensor data.

Integration

The flowmeter pulse output is often used as input for an energy meter or as input for digital systems for remote reading.

SITRANS FUS380 has two pulsel outputs, with functions that can be individually selected.

The settings of the transmitter, e. g. flow and pulse output rate, are defined when ordering the complete flowmeter.

If the flowmeter forms part of an energy meter system for custody transfer, no further approvals are needed, except eventually local approvals on the flowmeter.

© Siemens 2020

Technical specifications

Input	
Measurement	Flow by measuring the transit time difference of ultrasonic signals through ultrasonic transducers in the sensor pipes. Supporting of 1-path or 2-path sensors in sizes DN 50 … 1200 measuring on water
Measuring rate • Battery mode • Mains supply • Back-up mode	 0.5 Hz Up to 15 Hz 0.5 Hz (at mains supply drop)
Flow rate	0.02 … 9 m/s (0.065 … 29.5 ft/s), bidirectional flow metering
Output	2 pulse or status outputs (A and B), individual galvanically isolated MOS relay outputs, passive mode, max. ± 35 V AC/DC, max. 50 mA
Max. pulse frequency	100 Hz at Q_s (Q_{max})
Pulse value and length	Selectable with the ordering of the flowmeter
Output A function	Pulse: forward, reverse, forward net, reverse net (preset: forward)
Output B function	Pulse: forward, reverse, forward net, reverse net (preset: forward) or alarm indication or call-up indication (preset: alarm)
Pulse value A and B	0.1 l/p, 0.25 l/p, 0.5 l/p, 1 l/p, 2.5 l/p, 10 l/p, 25 l/p, 50 l/p, 100 l/p, 250 l/p, 500 l/p, 1 m^3/p, 2.5 m^3/p, 5 m^3/p, 10 m^3/p, 25 m^3/p, 50 m^3/p, 100 m^3/p, 250 m^3/p, 500 m^3/p, 1 000 m^3/p
Pulse length (depending on Q_{max} by DN selection)	5, 10, 20, 50, 100, 200, 500 ms (standard 5 ms)
Alarm indication	Path 1 (F1), path 2 (F2) internal, failure (F3, F4), powers supply warning or low battery indication (F5), Q_{max} overflow (F6), pulse overflow (F7, F8), internal data logger warning (F9)
Analog output	Passive current output 4 ... 20 mA Data span pre-selectable depending on pipe size
Rated operation conditions	
Ambient conditions	
Ambient temperature • Operation • Storage	 -10 … +60 °C (14 … 140 °F) (MID version: max. +55 °C (131 °F)) -40 … +85 °C (-40 … +185 °F) (battery included)
Enclosure rating	IP67/NEMA 4X/6 to EN 60529 and DIN 40050
Electromagnetic compatibility • Emitted interference • Immunity • MID approved (FUE380 series)	 To EN 55011/CISPR-11 To EN/IEC 61326-1 (Industry) Environment class E2 and M1
Mechanical vibration	2 g, 1 … 800 Hz sinusoidal in all directions according to IEC 68-2-6
Weight of transmitter	Approx. 1.5 kg (3.3 lb)

Design	
Enclosure material	Fibre-glass reinforced polyamide, light gray color
Wall mounting kit	IP67/NEMA 4X/6 terminal box for the wall mounting of the transmitter, fiberglass reinforced polyamide with stainless steel bracket, cable glands entries: 2 x 2 M20 or PG 13.5 for power supply and outputs and 2 x M20 or PG 13.5 for the sensor cables, glands (supply and outputs and double cable entries for sensor cables) are included.
Sensor cable	Coaxial cable sets for remote transmitter up to 30 m (98.4 ft) long transducer cable, 75 Ω impedance, cables sets are prepared for the connection to the sensors Triax cables or integral version
Display and controls	
Display	LCD, 8 digits, additional 2 digits and symbols for status information
Resolution	Totalized information can be displayed with 1, 2 or 3 decimals or automatic adjustment (default)
Display setting	Flow unit: Preset: m^3/h Volume unit: Preset: m^3
Push button	One push button for menu selection and display information
Communication (IrDA optical eye)	IrDA – optical communication and control interface with Modbus RTU protocol for read or write transmitter settings and data via PC and PDM tool
Power supply	
Battery	D-cell battery pack, 3.6 V LiSOCl (Lithium Thionyl Chloride, 34 Ah), replaceable, life- and working-time up to 6 years
Mains	87 … 265 V AC (50 … 60 Hz) or 87 … 265 V AC (50 … 60 Hz) with D-cell single battery backup, 2.6 V LiSOCl (Lithium Thionyl Chloride, 17 Ah), replaceable, life time up to 8 years
Power consumption	
Mains version	Approx. 2.5 VA

© Siemens 2020

Technical specifications (continued)

SONOKIT, FUS380, FUE380

The flow values and settings are predefined according to dimension selection.

The transmitter settings are changeable by using the SW tool PDM (for FUE380 series some of the setting are only readable, restriction of the approval requirements).

Accuracy/Error in measurement:

(at reference conditions for FUS380 and FUE380 series, SONOKIT series will differ in the accuracy)

- Pulse output
  - ≤ ± 0.5 % of measured value at 0.5 … 10 m/s or
  - ≤ ± 0.25/V [m/s] % of measured value at flow < 0.5 m/s
- Repeatability ≤ 0.25 % of measured value at 0.5 … 10 m/s
- Reference conditions
  - Process temperature and ambient temperature: 25 °C ± 5 °C (77 °F ± 9 F)
  - Transmitter Warming-up time 30 min.
  - Installation conditions of the sensor: Upstream section > 10 x DN and downstream section > 5 DN

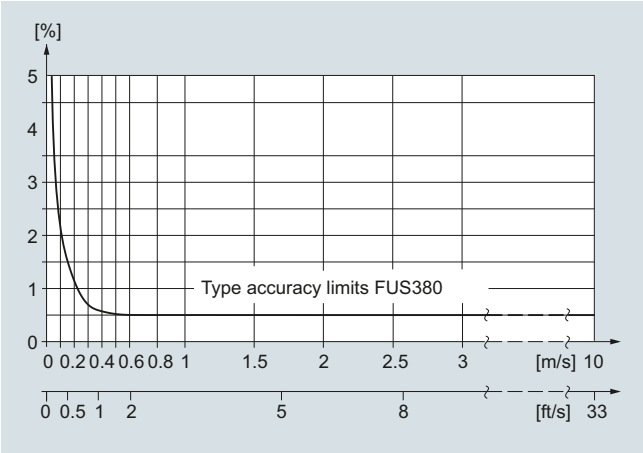

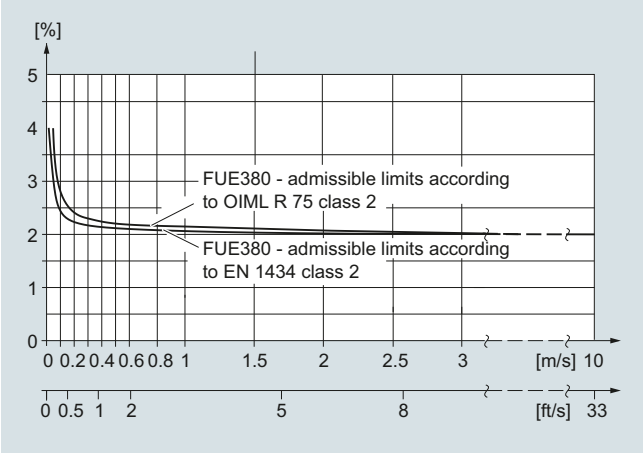

Output configuration

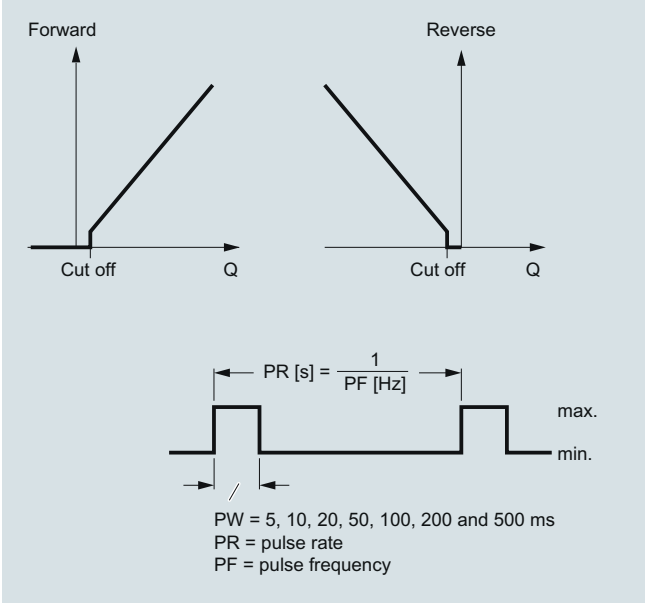

Pulse volume: output A/B configured as volume per pulse, calculated on forward/reverse or net forward/reverse flow. The volume per pulse is free scaleable (via PDM software).

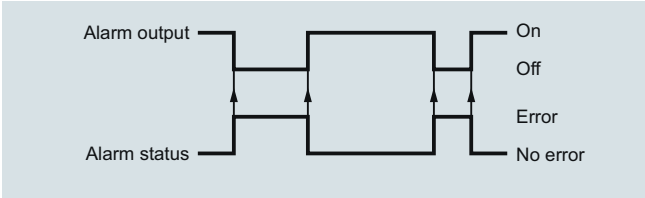

Pulse output B can be used as stated above or as alarm or call-up function.

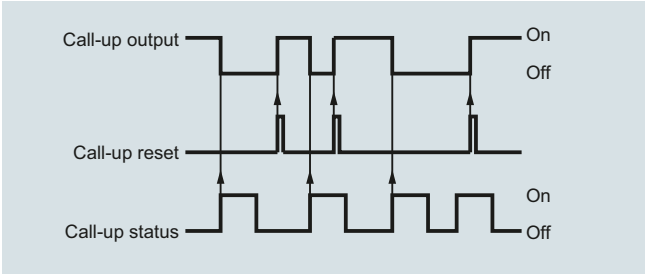

Call-up: the call-up output is active until manually reset by use of PDM tool. The call-up function is activated when an alarm is activated.

© Siemens 2020

Technical specifications (continued)

Current output

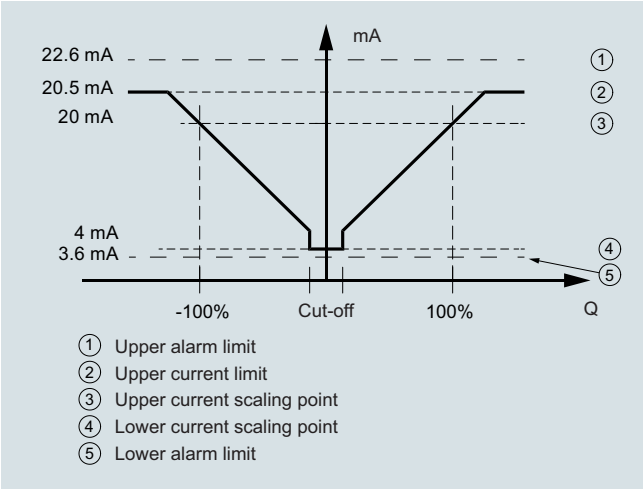

Bidirectional flow

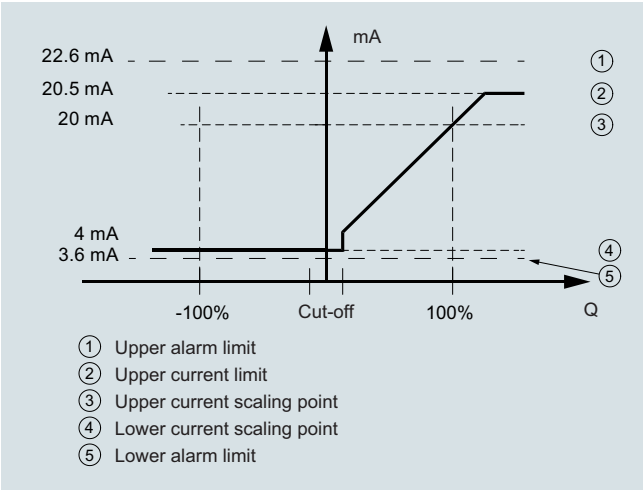

Positive flow

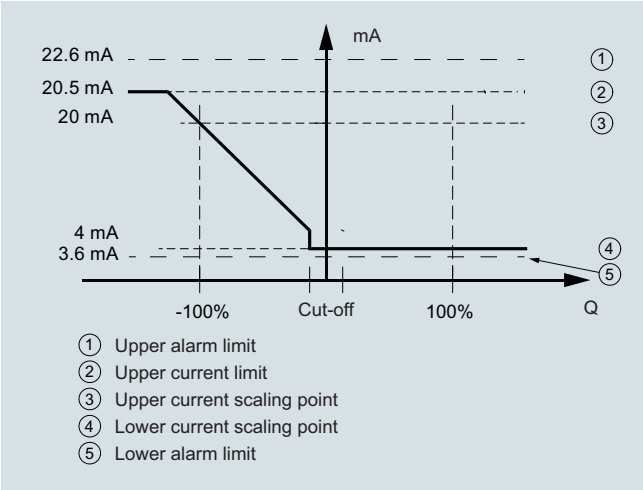

Negative flow

Sensor coaxial cable for SONOKIT series with FUS080

Coaxial cable		
Standard coaxial cable (75 Ω)		
Outside diameter	Ø 5.8 mm	
Length	15, 30 m (49.2, 98.4 ft) between sensor and transmitter	
Material (outside jacket)	Black PE	
Ambient temperature	-10 … +70 °C (14 … 158 °F)	

Sensor coaxial cable for FUS380 /FUE380 series

Coaxial cable		
High temperature coaxial cable (75 Ω)	With special designed glands for connection in the sensor/transducer	
Outside diameter	Ø 5.13 mm (first 0.3 m (0.98 ft) part to the transducer), Ø 5,8 mm (for remaining cable to the transmitter – black holt melt junction part between (Ø 16 mm, length 70 mm)	
Length	Up to 30 m (98.4 ft) between sensor and transmitter	
Material (outside jacket)	Brown PTFE (0.3 m (9.84 ft) part) and black PE (for remaining cable)	
Ambient temperature	-200 … +200 °C (-328 … +392 °F) (brown PTFE transducer part) and -10 … +70 °C (14 … 158 °F) (black PE for remaining transmitter cable part)	

© Siemens 2020

Selection and ordering data

Transmitter FUS080 operating instructions, accessories and spare parts

Operating instructions

Description	Article No.
for use with SONOKIT • English	**A5E03059912**
integrated in FUS/FUE380 • English • German	**A5E00730100** **A5E00740611**

All literature is available to download for free, in a range of languages, at
http://www.siemens.com/processinstrumentation/documentation

Accessories

Description	Article No.	
Sun lid for FUS080 transmitter (frame and lid)	**A5E02328485**	
Brace (holder) for optical IrDA eye	**A5E00695277**	
IrDA infrared interface adapter with USB for data acquisition with 1.2 m (3.9 ft) cable	**FDK:087L4163**	
Process Device Manager SIMATIC PDM		
SIMATIC PDM For more details about SIMATIC PDF please go to chapter 8 "Digitalization and Communication".	**See the Selection and Ordering data on chapter 8 "Digitalization and Communication"**	

Spare parts

A spare part transmitter can be ordered for a specific system. In the description of the following spare part transmitters the related transmitter Article No. found on the device silver front label is noted.

Spare part transmitter for FUS380 systems (7ME3400)

Description	Article No.	
FUS080 transmitter 3.6 V battery (no battery included, to be ordered separate) as spare part transmitter for FUS380 flowmeter series. Transmitter Article No. 7ME3450-0AA10-2AA0	**A5E02729700**	
FUS080 transmitter 3.6 V battery (battery included) as spare part transmitter for FUS380 flowmeter series [1]. Transmitter Article No. 7ME3450-0AA10-2AA0	**A5E02729035**	
FUS080 transmitter 230 V mains as spare part transmitter for FUS380 flowmeter series. Transmitter Article No. 7ME3450-0AA10-2AA0	**A5E02699309**	
FUS080 transmitter 230 V mains with backup-battery as spare part transmitter for FUS380 flowmeter series. Transmitter Article No. 7ME3450-0AA40-2AA0	**A5E02729610**	

Description	Article No.
When ordering: Inform on flowmeter order no. and flowmeter serial no. (e.g. 7ME3400-xxxxx-xxxx-Z, XX.... and xxxxxxHxxx)	

Spare part transmitter for FUE380 approved systems (7ME3410)

(only with MID approval marks, no MID verification – only a complete flowmeter can be MID-verified, i.e. sensor together with the transmitter)

Description	Article No.	
FUE080 transmitter 3.6 V battery (no battery included, to be ordered separate) as spare part transmitter for FUE380 flowmeter series. Transmitter Article No.7ME3450-0AA10-2AB0.	**A5E02734600**	
FUE080 transmitter 3.6 V battery (battery included) as spare part transmitter for FUE380 flowmeter series [1]. Transmitter Article No. 7ME3450-0AA20-2AB0	**A5E02734568**	
FUE080 transmitter 230 V mains as spare part transmitter for FUE380 flowmeter series. Transmitter Article No. 7ME3450-0AA30-2AB0	**A5E02734539**	
FUE080 transmitter 230 V mains with backup-battery as spare part transmitter for FUE380 flowmeter series. Transmitter Article No. 7ME3450-0AA40-2AB0	**A5E02734585**	

When ordering: Inform on flowmeter order no. and flowmeter serial no. (e.g. 7ME3410-xxxxx-xxxx-Z, XX.... and xxxxxxHxxx)

Spare part transmitter for SONOKIT systems (7ME3210/7ME3220)

Description	Article No.	
FUS080 transmitter 3.6 V battery (no battery included, to be ordered separate) as spare part transmitter for SONOKIT flowmeters. Transmitter Article No. 7ME3450-0AA10-2AA0	**A5E03048726**	
FUS080 transmitter 3.6 V battery (no battery included) as spare part transmitter for SONOKIT flowmeters [1]. Transmitter Article No. 7ME3450-0AA20-2AA0	**A5E03048714**	
FUS080 transmitter 230 V mains as spare part transmitter for SONOKIT flowmeters. Transmitter Article No. 7ME3450-0AA30-2AA0	**A5E03048701**	
FUS080 transmitter 230 V mains with backup-battery as spare part transmitter for SONOKIT flowmeters. Transmitter Article No. 7ME3450-0AA40-2AA0	**A5E03048719**	

When ordering: Inform on flowmeter order no. and flowmeter serial no. (e.g. 7ME3220-xxxxx-xxxx-Z, XX.... and xxxxxxHxxx)

[1] Lithium batteries are subject to special transportation regulations according to United Nations "Regulation of Dangerous Goods, UN 3090 and UN 3091". Special transport documentation is required to observe these regulations. This may influence both transport time and costs.

© Siemens 2020

Selection and ordering data (continued)

Spare part transmitter for FUS880 retrofitting systems (7ME3440)

Description	Article No.	
Sparepart FUS080 transmitter 3.6 V, incl. 3.6V dual batterie pack, USA version Transmitter Article No.: 7ME3450-0AA20-1CA0: Label, 0: Siemens FUS080 transmitter; Version, 0: Without connection box; Enclosure, A: IP67/NEMA 4X/6; Code A: Standard; Supply Voltage, 2: 3.6V DC battery; Ex. Approval, 0: no Ex approval; Display, 1: With display and unit label; Region version, C: USA: AcFt,CFS; Application, A: Standard FUS080 (for SITRANS Retrofit - 7ME344); Code, 0: Standard	**A5E03412669**	
FUS080 transmitter for FUS880 retrofit systems, USA version, incl. wall-mounting kit, 2 transducers and 2 pcs. 60 ft (20 m) of cables. Label, 0: Siemens FUS080 transmitter; Diameter, 0A: None; Wall Thickness, A: None; Pipe Material, 0: No Pipe; Track configuration, 1: 1-Track; Region version, 2: USA: AcFt, CFS; Transmitter, D: FUS080, IP67, Battery, Remote, unit label; Template, A: None; Transducer coax cable, 4: 20 m with gland	**7ME3440-0AA01-2DA4**	
FUS080 transmitter for FUS880 retrofit systems, USA version, incl. wall-mounting kit, 4 transducers and 4 pcs. 60 ft (20 m) of cables: Label, 0: Siemens FUS080 transmitter; Diameter, 0A: None; Wall Thickness, A: None; Pipe Material, 0: No Pipe; Track configuration, 3: 2-Track (X-Configuration); Region version, 2: USA: AcFt, CFS; Transmitter, D: FUS080, IP67, Battery, Remote, unit label; Template, A: None; Transducer coax cable, 4: 20 m with gland	**7ME3440-0AA03-2DA4**	

Description	Article No.	
Internal battery pack, one set of 2 D-cell (3.6 V 34 Ah)[1)] • 1 pc. pack • 24 pcs. pack	 **A5E02679676** **A5E02896941**	
Single battery back-up to main supply (17 Ah)[1)]	**A5E02679923**	
Battery cover for transmitter FUS080	**A5E00694468**	
PG 13.5 cable gland set for FUS080 power and output connection, black PA plastic, 2 pcs. • cables Ø 6 … 12 mm (0.24" … 0.47") • -40 … +100 °C (-40 … +212 °F)	**FDK:083G0228**	
PG 13.5 cable gland set (two cable entries) for FUS080 sensor connection, black PA plastic, 2 pcs. • cables Ø 6 … 12 mm (0.24" … 0.47") • -40 … +100 °C (-40 … +212 °F)	**A5E00694500**	
SITRANS FUS/FUE380 wall mounting kit for remote transmitter mounting, including connection plate (DN 50 … 1200/2" … 48")	**A5E00694509**	
SITRANS FUS/FUE380 terminal box for compact transmitter mounting, including connection plate, (bronze sensors only, DN 50 … 80/2" … 3")	**A5E01208138**	
SITRANS FUS/FUE380 terminal box for compact transmitter mounting, including connection plate, (steel sensors only, DN 100 … 1200/4" … 48")	**A5E00694660**	
FUS080 display and keypad with Siemens logo	**A5E00873496**	
FUS080 display and keypad neutral (without logo)	**A5E33147123**	

[1)] Lithium batteries are subject to special transportation regulations according to United Nations "Regulation of Dangerous Goods, UN 3090 and UN 3091". Special transport documentation is required to observe these regulations. This may influence both transport time and costs.

© Siemens 2020

Selection and ordering data (continued)

Downloads for DEVICE description FUE380
http:/support.automation.siemens.com/WW/view/en/17320235

Sensor cables for FUS380/FUE380 flowmeters

Description	Article No.	
DN 50 … DN 80 flowmeters		
Coaxial cable for FUS080; with 0.3 m brown PTFE high temp. transducer part, max. 200 °C (392 °F) and black PVC for remaining transmitter part, max. 70 °C (158 °F); impedance 75 Ω		
5 m (16.4 ft) cable set (4 pcs.) for DN 50 … DN 80 (2" … 3") remote mounting	**A5E01208092**	
10 m (32.8 ft) cable set (4 pcs.) for DN 50 … DN 80 (2" … 3") remote mounting	**A5E01208114**	
20 m (65.6 ft) cable set (4 pcs.) for DN 50 … DN 80 (2" … 3") remote mounting	**A5E01208117**	
30 m (98.4 ft) cable set (4 pcs.) for DN 50 … DN 80 (2" … 3") remote mounting	**A5E01208121**	
0.5 m (1.64 ft) cable set (4 pcs.) for DN 50 … DN 80 (2" … 3") for compact version of FUS380/FUE380	**A5E01208126**	
DN 100 … DN 1200 flowmeters		
Coaxial cable for FUS080; with 0.3 m brown PTFE high temp. transducer part, max. 200 °C (392 °F) and black PVC for remaining transmitter part, max. 70 °C (158 °F); impedance 75 Ω		
5 m (16.4 ft) cable set (4 pcs.) for DN 100 … DN 1200 (4" … 48") remote mounting	**A5E00695476**	
10 m (32.8 ft) cable set (4 pcs.) for DN 100 … DN 1200 (4" … 48") remote mounting	**A5E00695479**	
20 m (65.6 ft) cable set (4 pcs.) for DN 100 … DN 1200 (4" … 48") remote mounting	**A5E00695480**	
30 m (98.4 ft) cable set (4 pcs.) for DN 100 … DN 1200 (4" … 48") remote mounting	**A5E00695483**	
1 m (3.28 ft) cable set (4 pcs.) for DN 100 … DN 1200 (4" … 48") for compact version of FUS380/FUE380	**A5E00695486**	

Sensor cables for SONOKIT flowmeter with FUS080

Description	Article No.	
15 m (49.2 ft) cable set (2 pcs.) remote mounting with SONOKIT flowmeters	**A5E02478541**	
30 m (98.4 ft) cable set (2 pcs.) remote mounting with SONOKIT flowmeters	**A5E02478551**	

Sensor cables for FUS880 retrofitting system (7ME3440)

Description	Article No.	
Coaxial cable with transducer connection		
for use in FUS880 and SONO 3300 sensors; with 0.3 m brown PTFE high temperature transducer part, max. 200 °C (392 °F) and black PVC for the remaining transmitter part, max. 70 °C (158 °F); cable impedance 75 W.W.		
• 1 × 10 m (32.8 ft)	**FDK:085L2400**	
• 1 × 20 m (65.6 ft)	**FDK:085L2401**	
• 1 × 30 m (98.4 ft)	**FDK:085L2402**	
Transducer spare part set of two transducers with gaskets for STRANS FUS880 retrofitting systems	**FDK:087H3007**	

© Siemens 2020

Dimensional drawings

FUS080 transmitter IP67/NEMA 4X/6, wall mounting and compact mounting

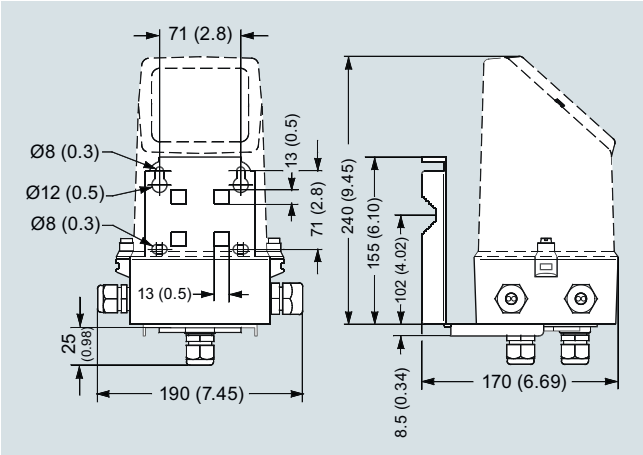

Transmitter wall mounted, dimensions in mm (inch)

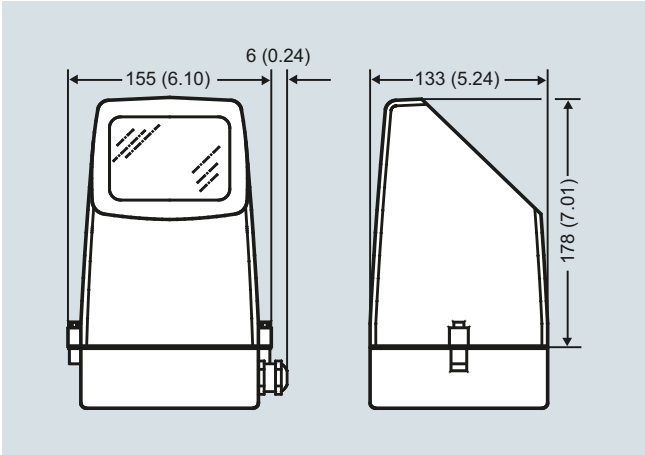

Transmitter compact mounted, dimensions in mm (inch)

© Siemens 2020

Circuit diagrams

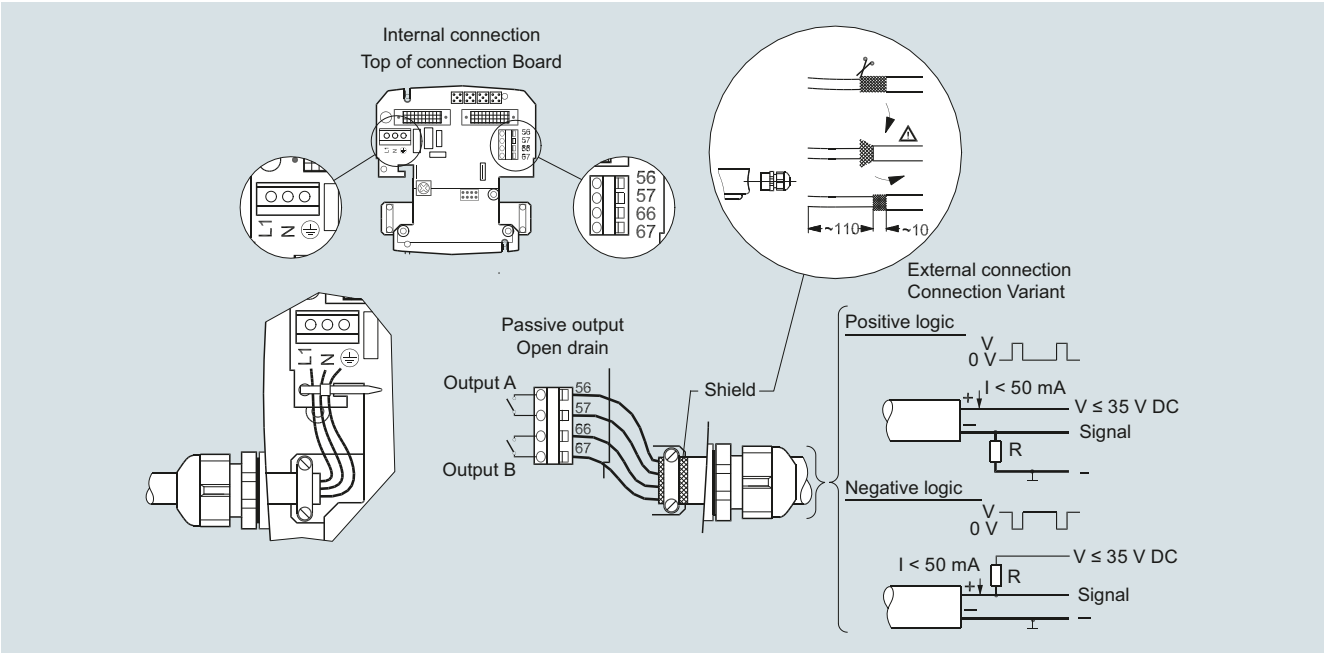

Electrical connection of SITRANS FUS080

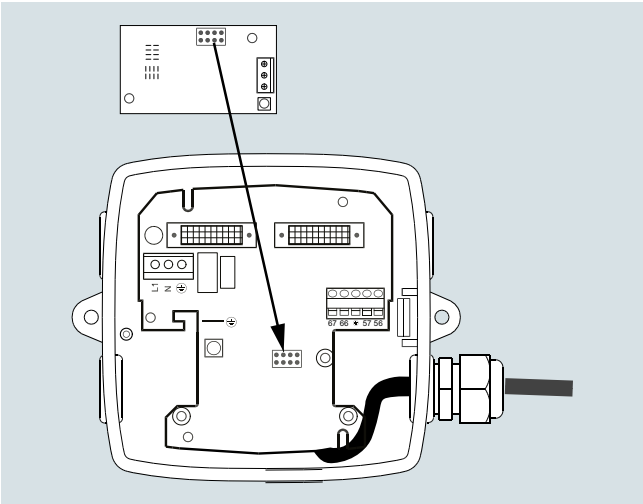

Analog module SITRANS FUS380

© Siemens 2020

SONO 3300/FUS060 flowmeter

Overview

The combination of SONO 3300 sensor and FUS060 transmitter is ideal for applications within the general industry. Measurements are independent of liquid temperature, density, pressure and conductivity. Transducers cannot be replaced.

Benefits

- Robust remote transmitter FUS060
- Robust design for industrial applications
- Measures all liquids less than 350 cSt, conductive or non-conductive
- No pressure drop
- Reliable and accurate flow measurements
- Long-time stability
- ATEX approval

Application

The main application for SONO 3300/FUS060 ultrasonic flowmeter is measurement of volume.

SONO 3300/FUS060 can be used for water and treated waste water.

Design

The SONO 3300/FUS060 consists of a casted sensor (DN 50 to 80 (2” to 3”)), welded pipes (DN 100 to 300 (4” to 12”)) and a transmitter FUS060.

The transmitter can only be mounted separately.

The internal signal cables from transducers to sensor connection box are protected from an aggressive environment by stainless steel pipes.

Sensor installation

See system information.

© Siemens 2020

Technical specifications

The transmitter related to this system is the SITRANS FUS060. Technical specifications to the FUS060 see page 3/254.

2-path sensor with flanges and inline transducers	
Error in measurement	
Error in measurement at reference conditions	V > 0.5 … 10 m/s, < ± 0.5 % of rate (v = flow speed)
Max. flow velocity	10 m/s (32 ft/s)
Nominal size	DN 50, DN 65, DN 80, DN 100, DN 125, DN 150, DN 200, DN 250, DN 300 (2" … 12")
Media temperature	Separate version: -10 … +160 °C (14 … 320 °F)
Ambient temperature (sensor)	Separate version: -20 … +60 °C (-4 … +140 °F)
	Storage: -40 … +85 °C (-40 … +185 °F)
Enclosure	Standard version: IP67 (NEMA 4X/NEMA 6)
	ATEX version: As standard, but with ATEX approval (see below)
Process connections	
PN designated EN 1092-1 type 11 (B)	• DN 50 … 300 (2" … 12"), PN 40
	• DN 100 … 300 (4" … 12"), PN 16
	• DN 200 ... 300 (8" … 12"), PN 10
Class designated EN 1759-1	• DN 50 ... 300 (2" … 12"), class 150
	• DN 50 ... 300 (2" … 12"), class 300
Transducer	Inline version welded into pipe
Materials	
Pipe	• DN 50 ... DN 80 (2" … 3"): Cast steel EN 1.1131-GS-15Mn5
	• DN 100 ... DN 300 (4" … 12"): Carbon steel EN 1.0345-P235GH
Flange	• DN 50 ... DN 300 (2" … 12"): EN 1.0025-S235JRG2
Class	ASTM A105
Transducer	Stainless steel AISI 316 or similar
Certificates and approvals	
Conformity certificate	The devices are supplied as standard with a Siemens Certificate of Conformity on DVD.
Material certificate	Material certificate according to EN 10204-3.1 available
NDT examination report	Extended material certificate is optionally available on special request (PVR)
Calibration report	A standard calibration report is shipped with each flowmeter.
Extended accredited ISO/IEC 17025 calibration certificates	Optionally available
Approvals	No custody transfer approvals
Ex approval	System ATEX approval for SONO 3300 with remote transmitter FUS060-Ex (ATEX II 2 G Ex dem [ia/ib] IIC T6/T4/T3 Gb)
	For Ex version the transducer cable length is restricted to 3 m (9.84 ft), in order to meet requirements.

The sensors are approved according to EU directive 2014/68/EU regarding fluid group 1, classified in category III. Design according to EN 13480 (PED Directive).

Coax cable between sensor SONO 3300 and transmitter FUS060

Standard Coax cable (75 Ω)	Coax cable with SMB straight plug on one end for the FUS060 connector
Outside diameter	Ø 5.8 mm
Length	3, 15, 30, 60, 90, 120 m (9.84, 49.21, 98.43, 196.85, 295.28, 393.70 ft) between sensor and transmitter
Material (outside jacket)	black PE
Ambient temperature	-10 … +70 °C (14 … 158 °F)
High temperature Coax cable (75 Ω)	Coax cable with SMB straight plug on one end for the FUS060 connector
Outside diameter	Ø 5.13 mm (first 0.3 m (9.84 ft) part to the transducer), Ø 5,8 mm (for remaining cable to the transmitter – with SMB plug at the end) and between these is a black hot melt junction Ø 16 mm (length 70 mm)
Length	3, 15, 30, 60, 90, 120 m (9.84, 49.21, 98.43, 196.85, 295.28, 393.70 ft) between sensor and transmitter (max. 3 m (9.84 ft)) transducer cable length for Ex area mounted transmitters
Material (outside jacket)	Brown PTFE (0.3 m (9.84 ft) part) and black PE (for remaining cable)
Ambient temperature	-200 … +200 °C (-328 … +392 °F) (brown PTFE transducer part) and -10 … +70 °C (14 … 158 °F) (black PE for remaining transmitter cable part)

© Siemens 2020

Selection and ordering data

Sensor SONO 3300 with transmitter FUS060 ↗		Article No. 7ME3300- ■ ■ ■ ■ 0 - ■ ■ ■ ■
↗ Click on the Article No. for the online configuration in the PIA Life Cycle Portal.		
Diameter	**Qn setting [m³/h]**	
DN 50 (2")	10	1 A
DN 50 (2")	26	1 B
DN 50 (2")	60	1 D
DN 65 (2½")	15	1 E
DN 65 (2½")	42	1 F
DN 65 (2½")	100	1 H
DN 80 (3")	20	1 J
DN 80 (3")	60	1 K
DN 80 (3")	150	1 M
DN 100 (4")	36	1 N
DN 100 (4")	100	1 P
DN 100 (4")	230	1 R
DN 125 (5")	50	1 S
DN 125 (5")	150	1 T
DN 125 (5")	360	1 V
DN 150 (6")	80	2 A
DN 150 (6")	220	2 B
DN 150 (6")	500	2 D
DN 200 (8")	120	2 E
DN 200 (8")	380	2 F
DN 200 (8")	900	2 H
DN 250 (10")	200	2 J
DN 250 (10")	600	2 K
DN 250 (10")	1400	2 M
DN 300 (12")	300	2 N
DN 300 (12")	850	2 P
DN 300 (12")	2200	2 R
Flange norm and pressure rating		
(All sizes are not available in all pressure ratings)		
EN 1092-1		
• PN 10 (DN 200 ... 300)		B
• PN 16 (DN 80 ... 300)		C
• PN 40 (DN 50 ... 300)		E
ANSI B16.5		
• Class 150 (DN 50 ... 300)		H
• Class 300 (DN 50 ... 300)		J
Sensor type (approval) and transmitter mounting		
IP67 standard, remote transmitter		1
IP67 Ex-version (ATEX), remote transmitter (Ex-version)		3
Cable gland entries in FUS060 and SONO 3300		
Cable glands M20 in sensor and in transmitter M25/20/16 x 1.5		1
Transmitter version of SITRANS FUS060		
IP65 (NEMA 4), 120/230 V AC		N
IP65 (NEMA 4), 24 V AC/DC		P
IP65 (NEMA 4), 24 V AC/DC, Ex-version (ATEX)		Q

Sensor SONO 3300 with transmitter FUS060	Article No. 7ME3300- ■ ■ ■ ■ 0 - ■ ■ ■ ■
FUS060 output module	
HART, 4 ... 20 mA, 1 pulse output, 1 relay	B
HART, Ex version, 4 ... 20 mA, 1 pulse output, 1 relay	C
PROFIBUS PA, 1 pulse/frequency	D
Transducer coaxial cable	
4 x 3 m, max. 70 °C (158 °F), the only option for Ex i	0
4 x 15 m, max. 70 °C (158 °F)	1
4 x 30 m, high temp. max.200 °C (392 °F)	2
4 x 30 m, max. 70 °C (158 °F)	3
4 x 60 m, max. 70 °C (158 °F)	4
4 x 90 m, max. 70 °C (158 °F)	5
4 x 120 m, max. 70 °C (158 °F)	6
4 x 3 m, high temp. max. 200 °C (392 °F), the only option for Ex i	7
4 x 15 m, high temp. max. 200 °C (392 °F)	8

Additional information	Order code
Please add "**-Z**" to Article No. and specify Order code(s) and plain text.	
Calibration	
Production calibration DN 50 ... DN 300 (with certificate, 2 x 3 points in 10 %, 25 % and 100 % Qn)	**Included**
Accredited Siemens ISO/IEC 17025 calibration for DN 50 to DN 200 with Qn as selected in Diameter. Calibration certificate: 2 x 5 points in 5 %, 10 %, 25 %, 50% and 100 % Qn (max. flow 630 m³/h).	**D20**
Accredited Siemens ISO/IEC 17025 calibration for DN 200 to DN 300 with Qn as selected in Diameter. Calibration certificate: 2 x 5 points in 5 %, 10 %, 25 %, 50 % and 100 % Qn (max. flow 2000 m³/h).	**D21**
Material certificate	
EN 10204-3.1	**F10**
Tag name plate	
Stainless steel TAG plate (1 x 24 x 80 mm), wire fixed. Font size depends on text length: 8 mm for 1 ... 10 characters, 4 mm for 11 ... 20 characters (specify in plain text).	**Y17**

Please use online Product selector to get latest updates:

https://www.pia-portal.automation.siemens.com

© Siemens 2020

Selection and ordering data (continued)

Flowmeter SONO 3300 with FUS060 operating instructions, accessories and spare parts

Operating instructions

Description	Article No.
SITRANS FUS060	
• English	**A5E01204521**
• German	**A5E02123845**
SITRANS F US SONO 3300	
• English	**A5E01365400**
• German	**A5E02690975**

All literature is available to download for free, in a range of languages, at
http://www.siemens.com/processinstrumentation/documentation

Accessories

Potting kit

Description	Article No.	
Potting kit for terminal box of SONO 3200 transducers for IP68/NEMA 6P (not for Ex sensors)	**FDK:085L2403**	

Spare parts

Cables for SONO 3300 with FUS060

(only as spare parts)

Description	Article No.	
Coax cable for FUS060, (75 Ω, max. 70 C (158 F), black PVC) (2 pcs.)		
• 3 (9.84)	**A5E00875101**	
• 15 (49.21)	**A5E00861432**	
• 30 (98.43)	**A5E01278662**	
• 60 (196.85)	**A5E01278682**	
• 90 (295.28)	**A5E01278687**	
• 120 (393.70)	**A5E01278698**	
High temp. coaxial cable for FUS060; with 0.3 m brown PTFE high temp. transducer part (max. 200 °C (392 °F)) and black PVC transmitter part with SMB plug (max. 70 °C (158 °F)); impedance 75 Ω (2 pcs.)		
• 3 (9.84)	**A5E00875105**	
• 15 (49.21)	**A5E00861435**	
• 30 (98.43)	**A5E01196952**	

Cable glands (for the SONO 3300 terminal box)

(only as spare parts)

Description	Article No.	
Type M20, material nickel plated brass, 2x cables Ø 5 … 6 mm, temperature range -25 … +200 °C (-13 … +392 °F) (2 pcs.)	**A5E02246329**	

Description	Article No.	
SONO 3300 terminal box lid, in stainless steel painted black (1 pc.)	**FDK:085U1505**	
Gasket for SONO 3300 terminal lid in EPDM (1 pc.)	**FDK:085U1820**	
SONO 3300 stainless steel terminal box (1 pc.), M20 cable gland version, incl. lid in stainless steel (painted black) and gasket in EPDM	**A5E00836867**	
Coax cable connecting plate (1 pc.) for SONO 3300 terminal box and use with transmitter type FUS060	**A5E02593568**	

© Siemens 2020

Dimensional drawings

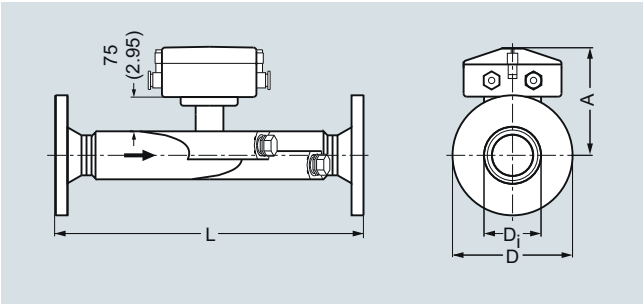

Sensor SONO 3300, dimensions in mm (inch)

DN	EN 1092-1																	
	PN 10						PN 16						PN 40					
	L [1]		D		D_i		L [1]		D		D_i		L [1]		D		D_i	
	mm	inch	mm	inch	mm	inch	mm	inch	mm	inch	mm	inch	mm	inch	mm	inch	mm	inch
50													475	18.70	165	6.50	52.60	2.07
65													475	18.70	185	7.28	62.70	2.47
80							380	14.96	200	7.87	78.00	3.07	400	15.75	200	7.87	78.00	3.07
100							375	14.76	220	8.66	102.40	4.00	400	15.75	235	9.25	102.40	4.00
125							375	14.76	250	9.84	128.30	5.05	400	15.75	270	10.63	128.30	5.05
150							360	14.17	285	11.22	154.20	6.07	400	15.75	300	11.81	154.20	6.07
200	400	15.75	340	13.39	207.30	8.16	400	15.75	340	13.39	207.30	8.16	450	17.72	375	14.76	206.50	8.13
250	400	15.75	395	15.55	260.40	10.25	400	15.75	405	15.94	260.40	10.25	500	19.69	450	17.72	258.80	10.19
300	400	15.75	445	17.52	309.70	12.19	420	16.54	460	18.11	309.70	12.19	500	19.69	515	20.28	307.90	12.12

DN	ANSI														Weight[2]			
	150 lb						300 lb						EN and ANSI		EN		ANSI	
	L [1]		D		D_i		L [1]		D		D_i		A					
	mm	inch	mm	inch	mm	inch	mm	inch	mm	inch	mm	inch	mm	inch	kg	lbs	kg	lbs
50 mm/2“	510	20.08	152	5.98	52.6	2.07	520	20.47	165	6.50	52.6	2.07	180	7.09	14	30.9	17	37.5
65 mm/2½“	510	20.08	178	7.01	62.7	2.47	520	20.47	190	7.48	62.7	2.47	186	7.32	16	35.3	20	44
80 mm/3“	420	16.54	191	7.52	78.0	3.07	440	17.32	210	8.27	78.0	3.07	193	7.60	19	42	23	51
100 mm/4“	420	16.54	229	9.01	102.4	4.03	440	17.32	254	10	102.4	4.03	205	8.07	25	55	35	78
125 mm/5“	440	17.32	254	10.00	128.3	5.05	460	18.11	279	10.98	128.3	5.05	218	8.58	29	64	40	89
150 mm/6“	430	16.93	279	10.98	154.2	6.07	450	17.71	318	12.52	154.2	6.07	232	9.13	35	78	50	111
200 mm/8“	480	18.90	343	13.50	202.7	7.98	500	19.69	381	15	202.7	7.98	256	10.08	54	119	72	160
250 mm/10“	490	19.29	406	15.98	254.5	10.02	520	20.47	444	17.48	254.5	10.03	283	11.14	85	189	98	217
300 mm/12“	550	21.65	483	19.02	306.3	12.06	580	22.83	521	20.51	306.3	12.06	309	12.17	115	256	142	322

[1] Length tolerance (mm): DN 50 … 100 +2/-3, DN 125 … 200 +3/-4, DN 250 … 300 +4/-5

[2] Approximate weigths without transmitter FUS060 - weigth of FUS060 is 4.4 kg (9.7 lb)

Circuit diagrams

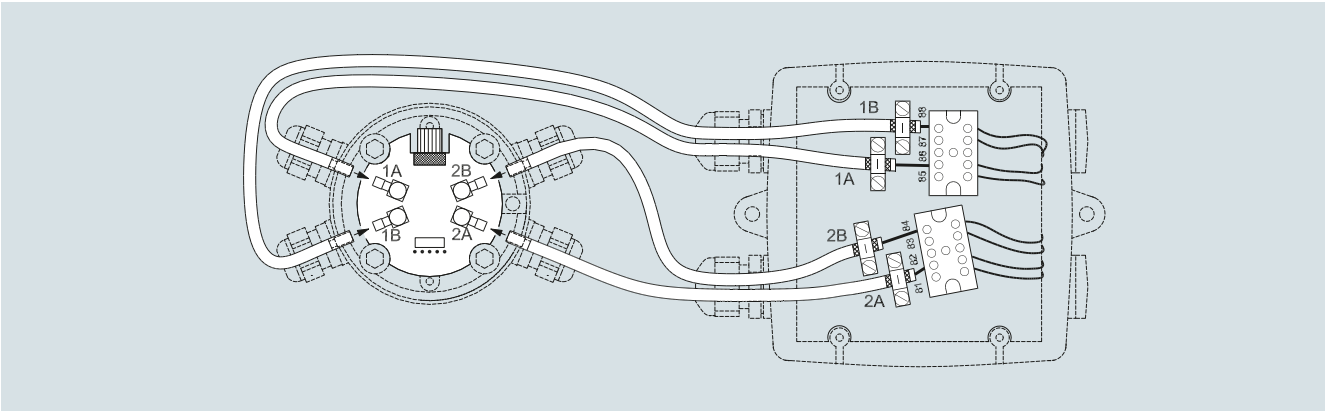

Electrical connection of SITRANS FUS060 and SONO 3300

© Siemens 2020

Overview

SONO3100/FUS060

The combination of the SONO 3100 sensor and the FUS060 transmitter is ideal for applications where process shut-down is impossible during service and where there is a need for extreme high/low temperatures and pressures.

Transducers can be changed without interrupting operation. SONO 3100 can optionally be delivered as a 1-path or 2-path solution.

Benefits

- Transducers can be replaced under pressure
- Measurement of all liquids less than 350 Cst, conductive or non-conductive
- No pressure drop
- Reliable and accurate flow measurements
- Long-time stability
- On request as special versions:
  - Special sensor material, e.g. Duplex, stainless steel
  - High/low temperature sensor version: +250 °C (+482 °F)/-200 °C (-328 °F) sensors
  - Pressure rating 430 bar (6235 psi)
  - Special sensor sizes down to DN 25
  - 1-path or 2-path sensor technology

Application

The main application for SONO 3100 in combination with transmitter type FUS060 is to measure volume flow within:

- Water and waste water

Design

The SONO 3100 in combination with FUS060 consists of a SONO 3100 sensor, SONO 3200 transducers with O-rings or flanges depending on selection - and a FUS060 transmitter.

SONO 3100 is basically supplied in a 2-path solution with flanges in sizes from DN 100 to DN 500 and without flanges in sizes from DN 100 to DN 300.

2-path standard, 1-path special versions available on request, depending on size (DN 25 to DN 500).

SONO 3100 is as standard available in carbon steel from DN 100 to DN 500.

FUS060 is designed for remote wall mounting only.

Technical specifications

The transmitter related to this system is the SITRANS FUS060. The technical specifications to the FUS060 see page 3/254.

2-paths sensor fitted with four SONO 3200 transducers	
Error in measurement	
Error in measurement at reference conditions	V > 0.5 … 10 m/s, < ± 0.5 % of rate (v = flow velocity)
Max. flow velocity	10 m/s (32 ft)
Nominal size	DN 100 ... 500 (4 ... 20")
Media temperature	
• Standard	-10 … +200 °C (14 … 392 °F)
• ATEX Ex d version	-20 … +180 °C (-4 … +356 °F)
• ATEX Ex i version	-10 … +190 °C (14 … 374 °F)
• Specials	-200 °C (-328 °F) or up to 250 °C (482 °F)
Ambient temperature	
• Standard and Ex-i version	-20 … +60 °C (-4 … +140 °F)
• Ex d version	-20 … +180 °C (-4 … +356 °F)
Enclosure	IP67 (NEMA 4X/6)/IP68 (NEMA 6P) and ATEX (see below)
Process connections	
PN designated EN 1092-1, type 11 (B)	
Pipe material carbon steel	• DN 200 … DN 500 (8" … 20"), PN 10
	• DN 100 … DN 500 (4" … 20"), PN 16
	• DN 200 … DN 500 (8" … 20"), PN 25
	• DN 100 … DN 500 (4" … 20"), PN 40
Class designated EN 1759-1	
Pipe material carbon steel	• DN 100 … DN 500 (4" … 20") Class 150
	• DN 100 … DN 300 (4" … 12") Class 300
Without flanges (EN 10217), weld-in version only in carbon steel	• DN 350 … DN 500 (14" … 20"), PN 10
	• DN 100 … DN 500 (4" … 20"), PN 16
	• DN 200 … DN 500 (8" … 20"), PN 25
	• DN 100 … DN 500 (4" … 20"), PN 40
Transducer SONO 3200	O-ring or flange versions
Materials	
Pipe	Steel EN 1.0345-P235GH
Flange	
PN	EN 10025-S235JRG2, 1E1
Class	ASTM A105,1,1
Transducer body	Stainless steel AISI 316 or similar
Transducer terminal house	Stainless steel AISI 316 or plastic PA 6.6

© Siemens 2020

Technical specifications (continued)

Certificates and approvals	
System ATEX approval for SONO 3100 together with transmitter FUS060-Ex	ATEX II 2 G Ex dem [ia/ib] IIC T6/T4/T3 Gb or ATEX II 2G Ex d IIC T3-T6 Gb with SONO 3200 Ex d transducers (for standard FUS060 transmitter, installed outside of Ex zone) For FUS060 Ex version the transducer cable length is restricted to 3 m (9.84 ft), in order to meet requirements for electrical immunity.
Conformity certificate CE	The devices are supplied as standard with a Siemens Certificate of Conformity on DVD.
Material certificates	Material certificate according to EN 10204-3.1 is optionally available.
NDT examination report	Extended material certificate is optionally available.
Pressure certificate	Pressure test according EN 1024-2.3 optionally available
Calibration report	A standard calibration report is shipped with each flowmeter. Optionally available: Extended accredited ISO/IEC 17025 calibration certificates
Approvals	No custody transfer approvals

The sensor SONO 3100 with transmitter FUS060 conforms to Product Family Standard EN 61326/A3 appendix A (Title: Electrical Equipment for Measurement control and laboratory use – EMC requirements).

The sensors are approved according to EU directive 2014/68/EU regarding fluid group 1, classified in category III. Design according to EN 13480 (PED Directive).

The SONO 3100 as weld-in version does not include the flanges. Thus, it can neither be tested nor approved according to PED. After the installation, all installation-related activities (welding, pressure test etc.) are the responsibility of the customer.

Selection and ordering data

		Article No.
SITRANS F US SONO 3100 sensor 2-path ↗		**7ME3100-** ■ ■ ■ ■ ■ - ■ ■ ■ ■
↗ Click on the Article No. for the online configuration in the PIA Life Cycle Portal.		
Diameter	**Qn setting [m³/h]**	
DN 100 (4")	28	**1 N**
DN 100 (4")	100	**1 P**
DN 100 (4")	220	**1 R**
DN 125 (5")	44	**1 S**
DN 125 (5")	150	**1 T**
DN 125 (5")	360	**1 V**
DN 150 (6")	64	**2 A**
DN 150 (6")	220	**2 B**
DN 150 (6")	500	**2 D**
DN 200 (8")	110	**2 E**
DN 200 (8")	380	**2 F**
DN 200 (8")	900	**2 H**
DN 250 (10")	180	**2 J**
DN 250 (10")	600	**2 K**
DN 250 (10")	1300	**2 M**
DN 300 (12")	300	**2 N**
DN 300 (12")	850	**2 P**
DN 300 (12")	2200	**2 R**
DN 350 (14")	350	**2 S**
DN 350 (14")	1000	**2 T**
DN 350 (14")	2800[1)]	**2 V**
DN 400 (16")	450	**3 A**
DN 400 (16")	1300	**3 B**
DN 400 (16")	3600	**3 D**
DN 500 (20")	1300	**3 J**
DN 500 (20")	2200	**3 K**
DN 500 (20")	4200[1)]	**3 M**
Flange norm and pressure rating		
(All sizes are not available in all pressure ratings)		
EN 1092-1		
• PN 10 (DN 200 ... 600)		**B**
• PN 16 (DN 100 ... 600)		**C**
• PN 25 (DN 200 ... 600)		**D**
• PN 40 (DN 100 ... 500)		**E**
ANSI B16.5		
• Class 150 (DN 100 ... 300)		**H**
• Class 300 (DN 100 ... 300)		**J**
Pipe without flanges (EN 10217) (weld-in version)[2)]		
• PN 10 (DN 200 ... 600)		**P**
• PN 16 (DN 100 ... 600)		**Q**
• PN 25 (DN 200 ... 600)		**R**
• PN 40 (DN 100 ... 500)		**S**

© Siemens 2020

Selection and ordering data

	Article No.										
SITRANS F US SONO 3100 sensor 2-path	**7ME3100-**										
	■	■	■	■	■	-	■	■	■	■	
Pipe and flange material											
Carbon steel (DN 100 ... 1200)				**1**							
Transducer type and approval											
IP67 (NEMA 4X/6) PA housing, PN 40, O-ring, 50 mm, 100 °C (212 °F) (DN 100 ... 600)					**1**						
IP68 SS housing, PN 40, O-ring, 50 mm, 200 °C (392 °F) (DN 100 ... 600)					**2**						
IP68 SS housing, PN 40, O-ring, 50 mm, 180 °C (356 °F), Ex d ATEX approval (only with standard FUS060) (DN 100 ... 600)					**3**						
IP67 (NEMA 4X/6) PA housing, PN 40, flange, 88 mm, 100 °C (212 °F) (DN 100 ... 300)					**4**						
IP68 SS housing, PN 40, flange, 88 mm, 200 °C (392 °F) (DN 100 ... 300)					**5**						
IP68 SS housing, PN 40, flange, 88 mm, 180 °C (356 °F), Ex d ATEX approval (only with standard FUS060) (DN 100 ... 300)					**6**						
IP67 SS housing, PN 40, O-ring, 50 mm, 90 °C (374 °F), Ex i ATEX approval (only with FUS060 Ex-version) (DN 100 ... 600)					**7**						
IP67 SS housing, PN 40, flange, 88 mm, 190 °C (374 °F), Ex i ATEX approval (only with FUS060 Ex-version) (DN 100 ... 300)					**8**						
Cable gland entries											
Cable glands M20 in transducers and in transmitter M25/20/16 x 1.5							**1**				
Cable glands ½" NPT in transducers and in transmitter							**2**				
Transmitter version of SITRANS FUS060											
IP65 (NEMA 4), 120/230 V AC								**N**			
IP65 (NEMA 4), 24 V AC/DC								**P**			
IP65 (NEMA 4), 24 V AC/DC, Ex-version (ATEX)								**Q**			
FUS060 output module											
HART, 1 pulse output, 1 relay									**B**		
HART Ex, 1 pulse output, 1 relay									**C**		
PROFIBUS PA, 1 pulse/frequency									**D**		
Transducer coaxial cable											
4 x 3 m, max. 70 °C (158 °F), the only option for Ex i										**0**	
4 x 15 m, max. 70 °C (158 °F)										**1**	
4 x 30 m, high temp. max.200 °C (392 °F)										**2**	
4 x 30 m, max. 70 °C (158 °F)										**3**	
4 x 60 m, max. 70 °C (158 °F)										**4**	
4 x 90 m, max. 70 °C (158 °F)										**5**	
4 x 120 m, max. 70 °C (158 °F)										**6**	
4 x 3 m, high temp. max. 200 °C (392 °F), the only option for Ex i										**7**	
4 x 15 m, high temp. max. 200 °C (392 °F)										**8**	

1) Reduced Q value during calibration (Qn setting unchanged).

2) For weld-in sensor versions according to EN 10217 (flangeless sensors 7ME3100-xxYxx-xxxx, Y = P, Q, R, S) the tube roundness shall be agreed via the PVR process (only if the factor of Du / Wxx > 100).

	Order code
Additional information	
Please add "**-Z**" to Article No. and specify Order code(s) and plain text.	
Calibration	
Production calibration DN 100 ... DN 600 (with certificate)	**Included**
Accredited Siemens ISO/IEC 17025 calibration for DN 100 to DN 200 with Qn as selected in diameter. Calibration certificate: 2 x 5 points in 5 %, 10 %, 25 %, 50 % and 100 % Qn (max. flow 630 m^3/h).	**D20**
Accredited Siemens ISO/IEC 17025 calibration for DN 200 to DN 600 with Qn as selected in diameter. Calibration certificate: 2 x 5 points in 5 %, 10 %, 25 %, 50 % and 100 % Qn (max. flow 2800 m^3/h).	**D21**
Accredited Siemens ISO/IEC 17025 calibration for DN 400 to DN 600 with Qn as selected in diameter. Calibration certificate: 2 x 5 points in 5 %, 10 %, 25 %, 50 % and 100 % Qn (max. flow 8000 m^3/h).	**D22**
Material certificate	
EN 10204-3.1	**F10**
EN 10204-3.1 and 100 % NDT on weldings, DN 100 ... DN 400	**F11**
EN 10204-3.1 and 100 % NDT on weldings, DN 500 ... DN 600	**F12**
Pressure certificate	
EN 10204-2.3	
Tag name plate	
Stainless steel TAG plate (1 x 24 x 80 mm), wire fixed. Font size depends on text length: 8 mm for 1 ... 10 characters, 4 mm for 11 ... 20 characters (specify in plain text).	**Y17**

Please use online Product selector to get latest updates:

https://www.pia-portal.automation.siemens.com

© Siemens 2020

Selection and ordering data (continued)

Flowmeter SONO 3100 operating instructions, accessories and spare parts

Operating instructions

Description	Article No.
SITRANS FUS060	
• English	**A5E01204521**
• German	**A5E02123845**
SITRANS F US SONO 3100	
• English	**A5E00814513**

This device is shipped with Safety Notes and a DVD containing further SITRANS F US literature.

All literature is available to download for free, in a range of languages, at http://www.siemens.com/processinstrumentation/documentation

Accessories

Description	Article No.
Potting kit for terminal box of SONO 3200 transducers for IP68/NEMA 6P (not for Ex sensors)	**FDK:085L2403**

Tools for transducer SONO 3200

Description	Article No.
Extraction tool for replacement of SONO 3200 O-ring transducers under pressure and for hot-tapping (working conditions: typically water, max. 40 bar and max. 60 °C (max. 580 psi and max. 140 °F)), 50 mm (1.97") transducers	**FDK:085B5331**

Spare parts

Transducer SONO 3200 spare parts, complete units

Type	Material	Gasket	Pressure rating	Terminal housing	Approv.	Temp. range [°C (°F)]	Length mm (inch)	Article No.
O-ring	316 SS	O-ring	PN 40	Plastic, PA 6.6 M20		-20 … +100 (-4 … +212)	50 (1.97)	**FDK:085B5453**
O-ring	316 SS	O-ring	PN 40	316 SS M20		-20 … +200 (-4 … +392)	50 (1.97)	**FDK:085B5450**
O-ring	316 SS	O-ring	PN 40	316 SS M20	Ex d [1]	-20 … +180 (-4 … +356)	50 (1.97)	**FDK:085B5451**
O-ring	316 SS	O-ring	PN 40	316 SS M20	Ex-i [2]	-10 … +190 (14 … 374)	50 (1.97)	**A5E00836448**
O-ring	316 SS	O-ring	PN 40	Plastic, PA 6.6 ½" NPT		-20 … +100 (-4 … +212)	50 (1.97)	**A5E00839472**
O-ring	316 SS	O-ring	PN 40	316 SS ½" NPT		-20 … +200 (-4 … +392)	50 (1.97)	**A5E00839431**
Flange	316 SS	Graphite	PN 40	Plastic, PA 6.6 M20		-20 … +100 (-4 … +212)	88 (3.47)	**FDK:085B5461**
Flange	316 SS	Graphite	PN 40	316 SS M20		-20 … +200 (-4 … +392)	88 (3.47)	**FDK:085B5462**
Flange	316 SS	Graphite	PN 40	316 SS M20	Ex d [1]	-20 … +180 (-4 … +356)	88 (3.47)	**FDK:085B5463**
Flange	316 SS	Graphite	PN 40	316 SS M20	Ex-i [2]	-10 … +190 (14 … 374)	88 (3.47)	**A5E00836465**
Flange	316 SS	Graphite	PN 40	Plastic, PA 6.6 ½" NPT		-20 … +100 (-4 … +212)	88 (3.47)	**A5E00839479**
Flange	316 SS	Graphite	PN 40	316 SS ½" NPT		-20 … +200 (-4 … +392)	88 (3.47)	**A5E00839440**
Flange	316 SS	Copper ring	PN 40	316 SS PG 13.5 (cryogenic version)		-200 … +100 (-328 … +212)	88 (3.47)	**FDK:085B5416**
Flat flange	316 SS	Flat gasket	PN 40	316 SS M20 (cryogenic version)		-200 … +100 (-328 … +212)	88 (3.47)	**A5E02593524**

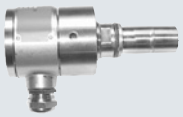

[1] ATEX (Ex) IIC 2G Ex d IIC T3- T6 Gb

[2] For systems with FUS060 ATEX IIC 2G Ex dem [ia/ib] T6/T4/T3

Terminal housing for SONO 3200 sensor

Type	Pressure rating	Material	Temp. range [°C (°F)]	Article No.
Terminal housing (M20 cable gland)	N/A	PA 6.6	-20 … +100 (-4 … +212)	**FDK:085B5501**
Terminal housing (M20 cable gland)	N/A	ASTM 316	-20 … +200 (-4 … +392)	**FDK:085B5504**
Terminal housing (½" NPT cable gland)	N/A	PA 6.6	-20 … +100 (-4 … +212)	**A5E00839460**
Terminal housing (½" NPT cable gland)	N/A	ASTM 316	-20 … +200 (-4 … +392)	**A5E00839427**
Ex d [1] terminal housing (M20 cable gland)	N/A	ASTM 316	-20 … +180 (-4 … +356)	**FDK:085B5505**
Ex-i [2] terminal housing (M20 cable gland)	N/A	ASTM 316	-10 … +190 (14 … 374)	**A5E00835255**

© Siemens 2020

Selection and ordering data (continued)

SONO 3200 spare parts, transducer body without terminal housing, including insert

Type	Material	Gasket	Pressure rating	Temp. range [°C (°F)]	Length mm (inch)	Article No.	
O-ring	316 SS	O-ring	PN 40	-20 … +200 (-4 … +392)	50 (1.97)	**FDK:085B1405**	
Flange	316 SS	Graphite	PN 40	-20 … +200 (-4 … +392)	88 (3.47)	**FDK:085B1464**	

Transducer SONO 3200 gaskets

Type	Pressure rating	Material	Temperature range [°C (°F)]	Article No.	
Gasket O-ring (3 pcs. for o-ring transducers)	PN 40	FKM	-20 … +200 (-4 … +392)	**FDK:085B1089**	
Gasket flange	PN 40/160	Graphite	-20 … +200 (-4 … +392)	**FDK:085B1080**	
Gasket and 12 mm (0.47“) bolts and nuts for flange transducers (4 pcs.)	PN 40	AISI 316 or equal	-20 … +200 (-4 … +392)	**FDK:085B1083**	
Gasket and 16 mm (0.63“) bolts and nuts for flange transducers (4 pcs.)	PN 160	Graphite, 316 SS	-20 … +200 (-4 … +392)	**FDK:085B1084**	
Gasket for cryogenics transducer with flat flange (2 pcs.)	PN 40	Graphite/metal composite	-200 … +100 (-328 … +212)	**A5E02593522**	

© Siemens 2020

Selection and ordering data (continued)

SONO 3200 cable glands

Description	Article No.	
Black PA plastic, cable Ø 5 … 13 mm (1 pc.), temperature range -20 … 100 °C (-4 … +212 °F)	**A5E02246304**	
½" NPT gray PA plastic, cable Ø 5 … 9 mm (1 pc.), temperature range -20 ... 100 °C (-4 ... +212 °F)	**A5E02246309**	
½" NPT crome plated brass, cable Ø 5 … 9 mm (1 pc.), temperature range -40 … 100 °C (-40 … +212 °F)	**A5E02246258**	
M20 stainless steel, cable Ø 4 … 6 mm (1 pc.), temperature range -25 … 200 °C (-13 … +392 °F), Ex i approval	**A5E02246194**	
M20 Stainless steel, cable Ø 5 … 8 mm (1 pc.) temperature range -60 … 180 °C (-76 … +356 °F), Ex d approval	**A5E02246311**	

Cables for SONO 3100 with FUS060

Description	Article No.	
Coaxial cable for FUS060, (75 Ω, max. 70 °C (158 °F), black PVC), (2 pcs.)		
• 3 m (9.84ft)	**A5E00875101**	
• 15 m (49.21ft)	**A5E00861432**	
• 30 m (98.43ft)	**A5E01278662**	
• 60 m (196.85ft)	**A5E01278682**	
• 90 m (295.28ft)	**A5E01278687**	
• 120 m (393.70ft)	**A5E01278698**	
High temp. coaxial cable for FUS060; with 0.3 m brown PTFE high temp. transducer part, max 200 °C (392 °F) and black PVC for remaining transmitter part with SMB plug, max. 70 °C (158 °F); impedance 75 Ω), (2 pcs.)		
• 3 m (9.84ft)	**A5E00875105**	
• 15 m (49.21ft)	**A5E00861435**	
• 30 m (98.43ft)	**A5E01196952**	
SITRANS F US special coaxial cable sets for low temperature cryogenic systems, with SMB-plug for transmitter SITRANS FUS060, PTFE material, temp. -200 … +200 °C (-328 … .+392 °F), impedance 75 Ω, (2 pcs.)		
• 10 m (32.84ft)	**A5E02085593**	
• 15 m (49.21ft)	**A5E03262088**	
• 30 m (98.43ft)	**A5E02085644**	
• 40 m (131.23ft)	**A5E02085649**	

© Siemens 2020

Dimensional drawings

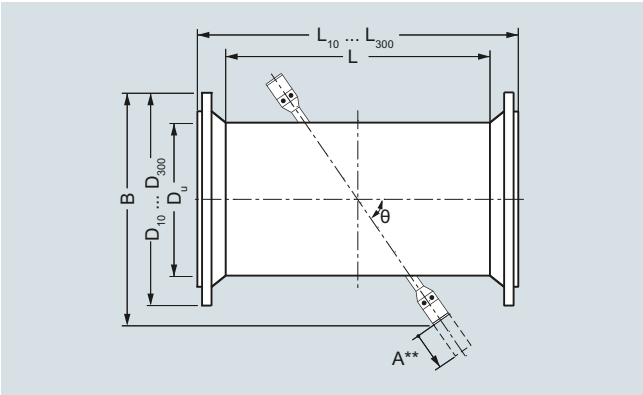

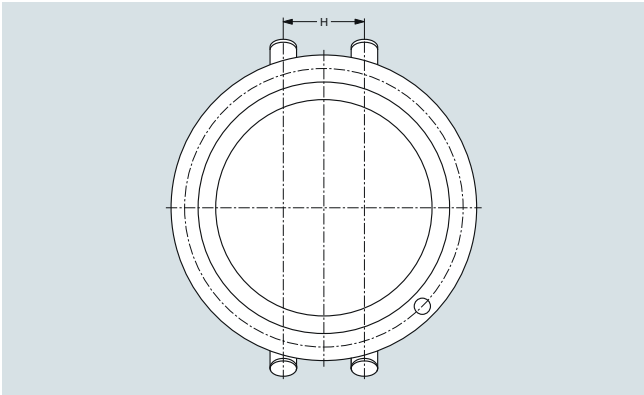

Sensor SONO 3100 with EN norm

						PN10			PN16			PN25			PN40		
DN	**D_U**	**L 1) 4)**	**B5)**	**θ**	**H**	**W_{min} 2)**	**D_{10}**	**L_{10} 1)**	**W_{min} 2)**	**D_{16}**	**L_{16} 1)**	**W_{min} 2)**	**D_{25}**	**L_{25} 1)**	**W_{min} 2)**	**D_{40}**	**L_{40} 1)**
	[mm]	[mm]	[mm]	[°]	[mm]	[mm]	[mm]	[mm]	[mm]	[mm]	[mm]	[mm]	[mm]	[mm]	[mm]	[mm]	[mm]
100	114.3	860	305	45 3)	42.8	-	-	-	3.6	220	960	-	-	-	3.6	235	990
125	139.7	862	325	45 3)	64.5	-	-	-	4.0	250	970	-	-	-	4.0	270	990
150	168.3	862	350	45 3)	78.1	-	-	-	4.5	285	970	-	-	-	4.5	300	1010
200	219.1	668	430	45 3)	102.1	6.3	340	790	6.3	340	790	6.3	360	820	6.3	375	840
250	273.0	714	480	45 3)	127.6	6.3	395	850	6.3	405	850	7.1	425	890	7.1	450	920
300	323.9	607	525	45 3)	151.8	7.1	445	740	7.1	460	760	8.0	485	790	8.0	515	830
350	355.6	639	550	45 3)	166.4	8.0	505	770	8.0	520	800	8.0	555	840	8.8	580	880
400	406.4	703	600	45 3)	191.3	8.0	565	850	8.0	580	875	8.8	620	925	11.1	660	975
500	508.0	797	690	45 3)	241.1	7.1	670	950	8.0	715	980	10.0	730	1050	14.2	755	1080
600	610.0	912	830	60	294.8	7.1	780	1075	8.8	840	1105	11.0	845	1165	-	-	-

1) Length tolerance (mm): DN 100 +2/-3, DN 125 … 200 +3/-4, DN 250 … 400 +4/-5, DN 500 … 600 +5/-6

2) Wall thickness for pressure rates PN 6 … 40. For weld-in sensor versions according EN10217 (flangeless sensors 7ME3100-xxYxx-xxxx, Y=P, Q, R, S) the tube roundness shall be agreed via the PVR process (only if the factor of Du/Wxx > 100). W_{min} wall thickness are min. values. The delivered sensor can have larger wall thicknesses to meet the selected pressure rate. Any specific required wall thickness must be ordered as PVR.

3) For all sensors with flange transducers path angle are 60°.

4) L is the length of sensor versions without flanges (weld-in version). For weld-in sensor versions according to EN 10217 (flangeless sensors 7ME3100-xxYxx-xxxx, Y = P, Q, R, S) the tube roundness shall be agreed via the PVR process (only if the factor of Du/Wxx > 100).

5) B dimension value is an approximate information and may differ a little by flange pressure rate.

A**) Space required for replacement of transducer min. 230 mm (9.1 inch).

SONO 3100, 2-path

Nominal diam.	**Flange type - Weight [kg (lbs)]**			
DN	**PN 10**	**PN 16**	**PN 25**	**PN 40**
100 (4”)	-	32 (70.5)	-	35 (77.2)
125 (5”)	-	38 (83.8)	-	44 (97.0)
150 (6”)	-	45 (99.2)	-	52 (114.6)
200 (8”)	59 (130.0)	58 (127.9)	70 (154.3)	79 (174.2)
250 (10”)	73 (161.0)	75 (163.3)	96 (211.6)	117 (257.9)
300 (12”)	83 (183.0)	92 (202.8)	114 (251.3)	151 (332.9)
350 (14”)	98 (216.0)	113 (249.1)	145 (332.9)	191 (421.1)
400 (16”)	119 (262.4)	141 (310.9)	191 (421.1)	275 (606.3)
500 (20”)	153 (337.3)	207 (456.4)	284 (626.0)	379 (836.0)
600 (24”)	193 (425.5)	276 (608.5)	363 (800.3)	-

Weight of system incl. process flanges and standard O-ring transducers. For sensors with flange transducer please add approx. 10 kg (22.05 lbs). For SS terminal housings instead of the standard PA housing add approx. 5 kg (11.03 lbs).

© Siemens 2020

Dimensional drawings (continued)

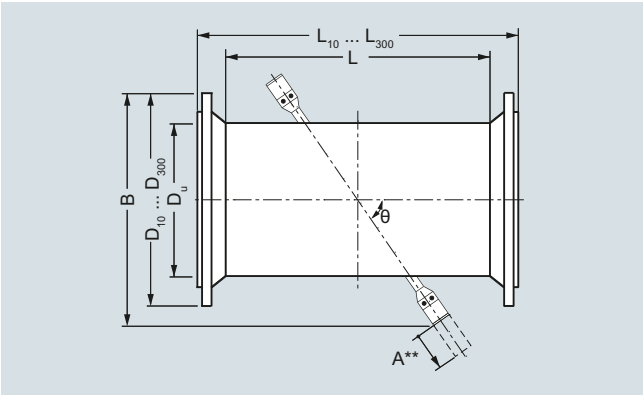

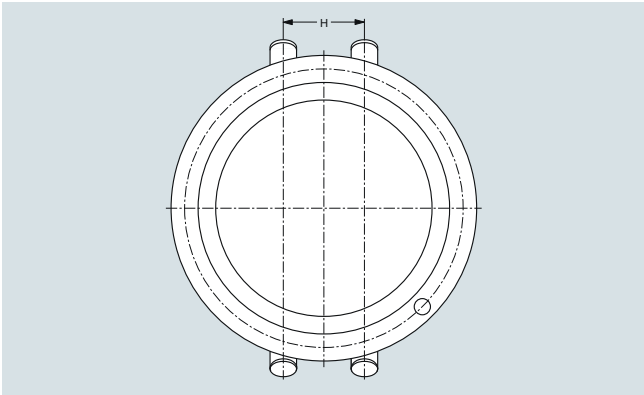

Sensor SONO 3100 with ANSI norm

Size (DN)	D_U	L [1) 4)]	B [5)]	θ	H	Class 150 W_{min} [2)]	Class 150 D_{150}	Class 150 L_{150} [1)]	Class 300 W_{min} [2)]	Class 300 D_{300}	Class 300 L_{300} [1)]
inch (mm)	[inch]	[inch]	[inch]	[°]	[inch]	[inch]	[inch]	[inch]	[inch]	[inch]	[inch]
4" (100)	4.50	33.86	12.01	45 [3)]	1.69	0.14	9.00	39.86	0.25	10.00	40.62
5" (125)	5.50	33.94	12.80	45 [3)]	2.54	0.15	10.00	40.94	0.27	11.00	41.70
6" (150)	6.63	33.94	13.78	45 [3)]	3.07	0.16	11.00	40.94	0.30	12.50	41.70
8" (200)	8.63	26.30	16.93	45 [3)]	4.02	0.16	13.50	34.30	0.29	15.00	35.06
10" (250)	10.75	28.11	18.90	45 [3)]	5.02	0.18	16.00	36.11	0.34	17.50	37.35
12" (300)	12.75	23.90	20.67	45 [3)]	5.98	0.20	19.00	32.90	0.39	20.50	34.14
14" (350)	14.00	25.16	21.65	45 [3)]	6.55	0.21	21.00	35.16	-	-	-
16" (400)	16.00	27.68	23.62	45 [3)]	7.53	0.22	23.50	33.74	-	-	-
20" (500)	20.00	31.38	27.17	45 [3)]	9.49	0.26	27.50	42.76	-	-	-
24" (600)	24.00	35.91	32.68	60	11.61	0.30	32.00	47.91	-	-	-

1) Length tolerance (mm): 4" +0.08"/-0.12" (+2/-3 mm), 5" … 8" +0.12"/-0.16" (+3/-4mm), 10" … 16" +0.16"/-0.20" (+4/-5 mm), 20" … 24" +0.20"/-0.24" (+5/-6 mm)

2) Minimum wall thickness for pressure rates Class 150 or Class 300. For weld-in sensor versions according to EN 10217 (flangeless sensors 7ME3100-xxYxx-xxxx, Y = P, Q, R, S) the tube roundness shall be agreed via the PVR process (only if the factor of Du/Wxx > 100). W_{min} wall thickness are min. values. The delivered sensor can have larger wall thicknesses to meet the selected pressure rate. Any specific required wall thickness to be ordered as PVR.

3) For all sensors with flange transducers path angle are 60°.

4) L is the length of sensor versions without flanges (weld-in version). For weld-in sensor versions according to EN 10217 (flangeless sensors 7ME3100-xxYxx-xxxx, Y = P, Q, R, S) the tube roundness shall be agreed via the PVR process (only if the factor of Du/Wxx > 100).

5) B dimension value is an approximate information and may differ a little by flange pressure rate.

A**) Space required for replacement of transducer min. 230 mm (9.1 inch).

Approximate weights for SONO 3100 sensor with ANSI B16.5 flanges

Nominal size DN	DN	Weight [1)] [kg (lbs)] Class 150		Class 300	
[inch]	[mm]	[kg]	[lbs]	[kg]	[lbs]
4“	100	32	70.5	35	77.2
5“	125	38	83.8	44	97.0
6“	150	45	99.2	52	114.6
8“	200	58	127.9	79	174.2
10“	250	75	165.3	117	257.9
12“	300	92	202.8	151	332.9
14“	350	113	249.1	-	-
16“	400	141	310.9	-	-
20“	500	207	456.4	-	-
24“	600	276	608.5	-	-

1) Weight of system incl. process flanges and standard O-ring transducers. For sensors with flange transducer please add approx. 10 kg (22.05 lbs). For SS terminal housings instead of the standard PA housing add approx. 5 kg (11.03 lb).

© Siemens 2020

Circuit diagrams

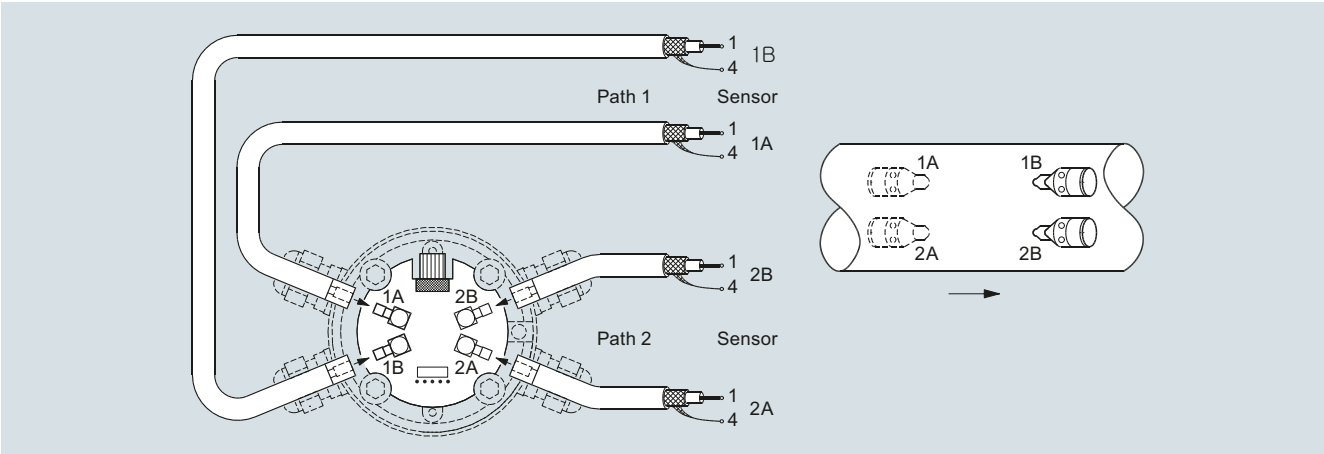

Electrical connection of SITRANS FUS060 and SONO 3100

© Siemens 2020

SONOKIT flowmeter (with FUS060 or FUS080)

Overview

SONOKIT is a transit time based ultrasonic flowmeter for retrofitting on existing pipelines.

The kit offers all necessary parts and special tools to make the installation as 1-path or 2-path flowmeter.

The set is made for installation on empty pipes or pipes under pressure without process shut-down (hot-tap).

Please contact Siemens for further information on hot-tap tools and instructions.

SONOKIT has inline transducers (in contact with media) which assure superior accuracy and performance.

Benefits

- Cost-effective solution – contains all the necessary components for retrofitting
- SONOKIT is easy to install in pipeline sizes DN 200 to DN 3000 (8" to 120") 1-path DN 100 to DN 2400 (4" to 96").
- No bypass installation necessary – withstands pressures up to 40 bar (580 psi) and media temperatures between -20 °C and +200 °C (-4 °F and +392 °F)
- High accuracy – the bigger the pipe, the more accurate the result
- Solid construction and no moving parts for a 100 % maintenance and obstruction-free flowmeter
- The SONOKIT comes with transducers in IP68 enclosure.
- Available in a robust version that can be buried and withstands constant flooding.
- Inline transducers assure superior accuracy and performance.
- Automatic calculation of the calibration factor when pipe geometry data are entered in the transmitter.
- FST030 transmitter, modified for inline HART or Modbus
- FUS080 transmitter, battery or mains-powered

Application

- Raw water intake for water treatment plants
- Water distribution systems
- Irrigation systems
- Power generation (energy and water)
- District heating plants
- Cooling water plants within the industry and in power stations
- Systems within the oil and refinery business
- Sewage treatment plants
- Plants transporting non-conductive liquids

Design

The SONOKIT package box contains all necessary parts to build an ultrasonic flowmeter on existing pipes depending on choices at ordering:

- Papers to wrap around pipes for alignment of sensors
- Transducer alignment tools
- Mounting plates, transducer holders and SONO 3200 transducers
- Transducer cables
- SITRANS FUS060 or FUS080 transmitter for wall mounting
- For pipes bigger DN500 (20") please order FST030 transmitter separately (FDK-085X6329)

Technical specifications

The transmitter related to this system is the SITRANS FUS080 or FST030.

Technical specifications on pages 3/260 and 3/331.

Accuracy	
Typical, depending on accuracy of measurements of installation	• 2-path: ≤ ± (0.5 … 1.5 %) • 1-path: ≤ ± (1 … 3 %)

Note:
Accuracy depends on the accuracy of the measurements taken at location. This means that inaccurate measurements of angles, distance between transducers, wall thickness and pipe diameter have a direct effect on the accuracy. Values measured are entered into the memory of the FUS060 or FUS080 transmitter.

Requirements for pipes

Size	FUS060: DN 100 … DN 3000 (4" … 120") FUS080: DN 100 … DN 1200 (4" … 48")
Line pressure	max. 40 bar (580 psi)
Media temperature	
• Standard version	-10 … +200 °C (14 … 392 °F)
• ATEX Ex d version (FUS060)	-20 … +180 °C (-4 … +356 °F)
• ATEX Ex i version (FUS060)	-10 … +190 °C (14 … 374 °F)
Ambient temperature sensor	
• Standard and Ex-i version	-20 … +60 °C (-4 … +140 °F)
• Ex d version	-20 … +180 °C (-4 … +356 °F)
Transducer enclosure/ approvals/certificates	
Standard version	IP67 (NEMA 6)/IP68 (NEMA 6P)
Ex approval	System ATEX approval for SONO 3200 Ex i transducers together with transmitter FUS060-Ex: ATEX II 2 G Ex dem [ia/Ib] IIC T6/T4/T3 Gb or ATEX II 2G Ex d T3-T6 Gb with SONO 3200 Ex d transducers (for standard FUS060 transmitter, installed outside of Ex zone)
Material certificates	EN 10204-3.1 material certificate on transducer mounting parts
Transducer materials	
Terminal housing	Standard version: PA 6.6, 100 °C (212 °F) or stainless steel AISI 316, 200 °C (392 °F)
Transducer body	Standard version: Stainless steel AISI 316, 200 °C (392 °F)

© Siemens 2020

Technical specifications (continued)

Materials of existing pipeline	
Steel	Transducer holder: EN 10273 or EN 10216 (P235GH) Mounting plates [1]: EN 10273 or EN 10216 (P235GH)
Concrete	Transducer holder: Stainless steel AISI 316 or similar Mounting plates [1]: (not included)
Stainless steel	Transducer holder: Stainless steel AISI 316 or similar Mounting plates [1]: Stainless steel AISI 316 or similar
Pipe wall thickness	
Steel pipe (AISI 316 and St. 37.2 or corresponding material)	Transducer and holder available in length L = 160, allowing a pipe wall thickness up to 20 mm (0.79")
Concrete pipe	Transducer and holder available in length L = 230, allowing a pipe wall thickness up to 200 mm (7.9") and pipe sizes ≥ DN 600.

Dimension of the package box (L x W x H)	856 x 390 x 344 mm (33.7" x 15.4" x 13.5")
Weight example of a package (standard 2-path with FUS060)	approx. 53 kg (116.8 lb)
Certificates and approvals	
Conformity certificate	The devices are supplied as standard with a Siemens Certificate of Conformity on a DVD.
Material certificate	Material certificate for the transducer parts according to EN 10204-3.1 is optionally available.
Approvals	No custody transfer approvals

Information on PED approval:
The SONOKIT includes the pipe mounting parts only and therefore it cannot be PED-approved. After the installation, all installation-related activities (welding, pressure test etc.) are the responsibility of the customer.

[1] Mounting plates are only included for empty pipe installation types (refer to selection "A"). For hot tap mounting the mounting plates are not included (refer to selection "B").

Installation requirements

The space requirements (in mm) around the pipe for retrofitting a SITRANS F US ultrasonic flowmeter type SONOKIT are given below:

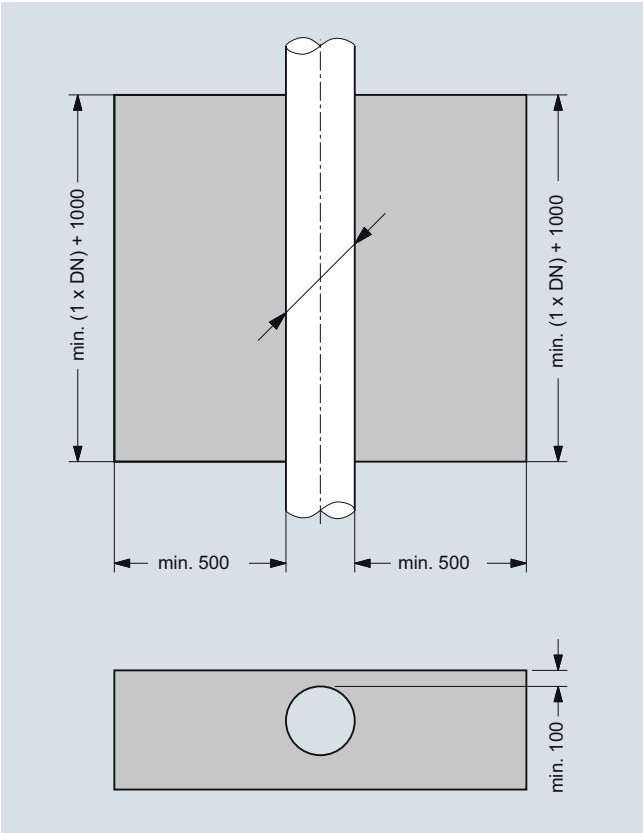

Empty pipe installation

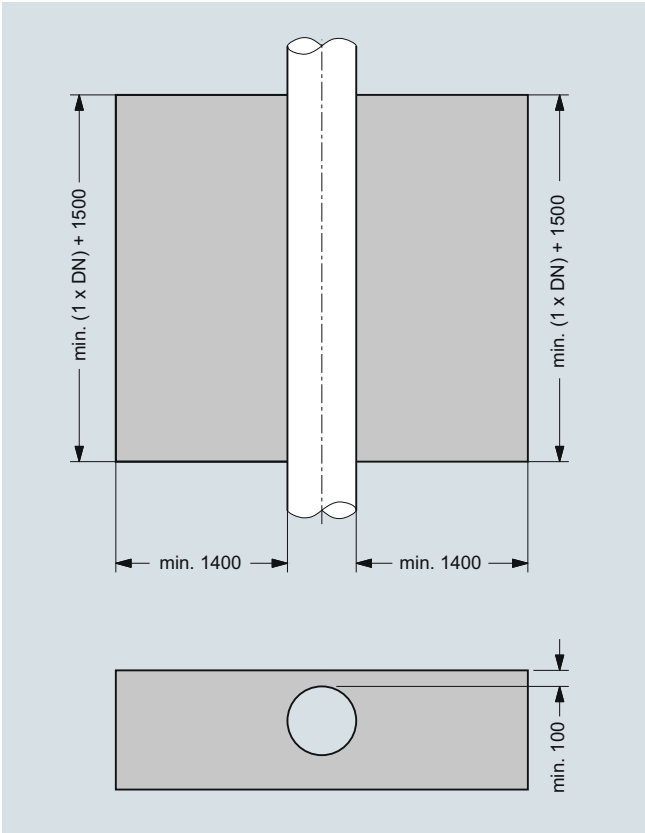

Hot-tap installation

© Siemens 2020

SONOKIT flowmeter (with FUS060 or FUS080)

Selection and ordering data

Article No.

SITRANS F US SONOKIT 1-path sensor ↗		7ME3210-	Ord. Code
↗ Click on the Article No. for the online configuration in the PIA Life Cycle Portal.			
Diameter	**Qn setting [m³/h]**		
DN 100 (4")	100	1 P	
DN 125 (5")	150	1 T	
DN 150 (6")	220	2 B	
DN 200 (8")	380	2 F	
DN 250 (10")	600	2 K	
DN 300 (12")	850	2 P	
DN 350 (14")	1000	2 T	
DN 400 (16")	1300	3 B	
DN 450 (18")	1700	3 F	
DN 500 (20")	2200	3 K	
DN 550 (22")	2600	3 P	
DN 600 (24")	3200	3 T	
DN 650 (26")	3600	4 B	
DN 700 (28")	4200	4 F	
DN 750 (30")	4800	4 K	
DN 800 (32")	5500	4 P	
DN 900 (36")	7500	5 B	
DN 1000 (40")	9000	5 K	
DN 1100 (44")	10000	5 P	
DN 1200 (48")	13200	5 T	
Installation method[1]			
Empty pipe (incl. transducer holder and mounting plates). Alignment rods and tools must be ordered as accessories.		A	
Hot tap, mounting under pressure (mounting plates **not** incl.). Special mounting tools to be ordered separately.		B	
Transducer holder			
Carbon steel, length = 160 mm, mounting plates in carbon steel		1	
Stainless steel, length = 160 mm, mounting plates in stainless steel		2	
Stainless steel, length = 230 mm, for concrete pipe (DN 600 ... 2400)		3	
Transducer type and approval			
IP67 (NEMA 4X/6) PA housing, PN 40, O-ring, 100 °C (212 °F), no approval		1	
IP68 SS housing, PN 40, O-ring, 180 °C (356 °F), Ex d, ATEX approval (only with standard FUS060)		2	
IP68 PA housing, Sylgard potting kit, PN 40, O-ring, 100 °C (212 °F), no approval		3	
IP68 SS housing, Sylgard potting kit, PN 40, O-ring, 200 °C (392 °F), no approval		4	
IP67 SS housing, PN 40, O-ring, 190 °C (374 °F), Ex i type, ATEX approval (only with FUS060 Ex)		5	

Article No.

SITRANS F US SONOKIT 1-path sensor	7ME3210-	Ord. Code
Cable gland entries		
Cable glands M20 in transducers and in transmitter M25/20/16 x 1.5 (FUS080 only M20)	1	
Cable glands ½" NPT in transducers and in transmitter (only with FUS060)	2	
Transmitter version of SITRANS FUS060		
(only DN 100 ... 2400)		
IP65 (NEMA 4), 120/230 V AC	N	
IP65 (NEMA 4), 24 V AC/DC	P	
IP65 (NEMA 4), 24 V AC/DC, Ex-version	Q	
Transmitter version of SITRANS FUS080		
(only DN 100 ... 1200)		
PDM software tool and IrDA-adapter, which are needed for settings update, to be ordered separately, see FUS080 accessories		
IP67/NEMA 4X/6 115 ... 230 V AC	U	
IP67/NEMA 4X/6 3.6 V battery version, incl. dual battery pack	V	
IP67/NEMA 4X/6 115 ... 230 V AC, incl. 3.6 V single battery backup	W	
IP67/NEMA 4X/6 3.6 V battery version (no battery pack included)[2]	X	
Transmitter output module		
Transmitter SITRANS FUS080		
Pulse and/or alarm output (standard for FUS080)	A	
Transmitter SITRANS FUS060		
HART, 1 pulse output, 1 relay	B	
HART Ex version, 1 pulse output, 1 relay	C	
PROFIBUS PA, 1 pulse/frequency	D	
Transducer coaxial cables (with FUS080 only, 15 and 30 m, 70°C (158 °F) cable types)		
2 x 3 m, max. 70 °C (158 °F), the only option for Ex i	0	
2 x 15 m, max. 70 °C (158 °F)	1	
2 x 30 m, high temp. max. 200 °C (392 °F)	2	
2 x 30 m, max. 70 °C (158 °F)	3	
2 x 60 m, max. 70 °C (158 °F)	4	
2 x 90 m, max. 70 °C (158 °F)	5	
2 x 120 m, max. 70 °C (158 °F)	6	
2 x 3 m, high temp. max. 200 °C (392 °F), the only option for Ex i	7	
2 x 15 m, high temp. max. 200 °C (392 °F)	8	
Special version (add Order code):		
No transducer cable, cable length 2 x 3 m, the only option for Ex i	9	R 0 A
No transducer cable, cable length 2 x 15 m	9	R 0 B
No transducer cable, cable length 2 x 30 m	9	R 0 C
No transducer cable, cable length 2 x 60 m	9	R 0 D
No transducer cable, cable length 2 x 90 m	9	R 0 E
No transducer cable, cable length 2 x 120 m	9	R 0 F

[1] Mounting tools must be ordered separately as "-Z"-options.

[2] Lithium batteries are subject to special transportation regulations according to United Nations "Regulation of Dangerous Goods, UN 3090 and UN 3091". Special transport documentation is required to observe these regulations. This may influence both transport time and costs."

© Siemens 2020

Selection and ordering data

	Article No.
Additional information	
Please add "**-Z**" to Article No. and specify Order code(s) and plain text.	
Material certificate	
EN 10204-3.1, transducer body material	**F30**
EN 10204-3.1, transducer body material	**F31**
EN 10204-3.1, mounting plate material	**F32**
Regional specific approval	
KCC marking for Korea	**W28**
Tag name plate	
Stainless steel TAG plate (1 x 24 x 80 mm), wire fixed. Font size depends on text length: 8 mm for 1 ... 10 characters, 4 mm for 11 ... 20 characters (specify in plain text).	**Y17**
Accessories	
Alignment rods-set for DN 100 ... 650 (4" ... 26") Ø = 25 mm, L = 500 mm, 3 pcs.	**S10**
Alignment rods-set for DN 700 ... 1900 (28" ... 76") Ø = 25 mm, L = 500 mm, 6 pcs.	**S11**
Alignment rods-set for DN 2000 ... 2400 (80" ... 96") Ø = 25 mm, L = 500 mm, 8 pcs.	**S12**
Spanner key for tranducer mounting type SONO 3200 O-ring type	**T11**
Tool set with various mounting/spare parts for SONOKIT installation	**T12**

Operating instructions

Description	Article No.
SITRANS FUS060	
• English	**A5E01204521**
• German	**A5E02123845**
SITRANS FUS080	
• English	**A5E03059912**
• German	**A5E31628428**
SITRANS F US SONOKIT 1-path	
• English	**A5E00814557**
• German	**A5E02610428**

All literature is available to download for free, in a range of languages, at
https://www.siemens.com/processinstrumentation/documentation

Please use online Product selector to get latest updates:

www.pia-portal.automation.siemens.com

SITRANS F US SONOKIT 2-path sensor ↗		**7ME3220-**											Ord. Code
↗ Click on the Article No. for the online configuration in the PIA Life Cycle Portal.		■	■	■	■	■	-	■	■	■	■		■ ■ ■
Diameter	**Qn setting [m³/h]**												
DN 200 (8")	380	**2**	**F**										
DN 250 (10")	600	**2**	**K**										
DN 300 (12")	850	**2**	**P**										
DN 350 (14")	1000	**2**	**T**										
DN 400 (16")	1300	**3**	**B**										
DN 450 (18")	1700	**3**	**F**										
DN 500 (20")	2200	**3**	**K**										
DN 550 (22")	2600	**3**	**P**										
DN 600 (24")	3200	**3**	**T**										
DN 650 (26")	3600	**4**	**B**										
DN 700 (28")	4200	**4**	**F**										
DN 750 (30")	4800	**4**	**K**										
DN 800 (32")	5500	**4**	**P**										
DN 900 (36")	7500	**5**	**B**										
DN 1000 (40")	9000	**5**	**K**										
DN 1100 (44")	10000	**5**	**P**										
DN 1200 (48")	13200	**5**	**T**										
Installation method[1)]													
Empty pipe (incl. transducer holder and mounting plates). Alignment rods and tools must be ordered as accessories.				**A**									
Hot tap, mounting under pressure (mounting plates **not** incl.). Special mounting tools to be ordered separately.				**B**									
Transducer holder													
Carbon steel, length = 160 mm, mounting plates in carbon steel					**1**								
Stainless steel, length = 160 mm, mounting plates in stainless steel					**2**								
Stainless steel, length = 230 mm, for concrete pipe (DN 600 ... 3000)					**3**								

© Siemens 2020

SONOKIT flowmeter (with FUS060 or FUS080)

Selection and ordering data

SITRANS F US SONOKIT 2-path sensor	Article No. 7ME3220-	Ord. Code
	■■■■■-■■■■	■■■
Transducer type and approval		
IP67 (NEMA 4X/6) PA housing, PN 40, O-ring, 100 °C (212 °F), no approval	1	
IP68 SS housing, PN 40, O-ring, 180 °C (356 °F), Ex d, ATEX approval (only with standard FUS060)	2	
IP68 PA housing, Sylgard potting kit, PN 40, O-ring, 100 °C (212 °F), no approval	3	
IP68 SS housing, Sylgard potting kit, PN 40, O-ring, 200 °C (392 °F), no approval	4	
IP67 SS housing, PN 40, O-ring, 190 °C (374 °F), Ex i type, ATEX approval (only with FUS060 Ex)	5	
Cable gland entries		
Cable glands M20 in transducers and in transmitter M25/20/16 x 1.5 (FUS080 only M20)	1	
Cable glands ½" NPT in transducers and in transmitter (only with FUS060)	2	
Transmitter version of SITRANS FUS060 (only DN 200 ... 500)		
IP65 (NEMA 4), 120/230 V AC	N	
IP65 (NEMA 4), 24 V AC/DC	P	
IP65 (NEMA 4), 24 V AC/DC, Ex-version	Q	
Transmitter version of SITRANS FUS080		
(only DN 200 ... 1200)		
PDM software tool and IrDA-adapter, which are needed for settings update, to be ordered separately, see FUS080 accessories		
IP67/NEMA 4X/6 115 ... 230 V AC	U	
IP67/NEMA 4X/6 3.6 V battery version, incl. dual battery pack	V	
IP67/NEMA 4X/6 115 ... 230 V AC, incl. 3.6 V single battery backup	W	
IP67/NEMA 4X/6 3.6 V battery version (no battery pack included)[2]	X	
Transmitter output module		
Transmitter SITRANS FUS080		
Pulse and/or alarm output (standard for FUS080)	A	
Transmitter SITRANS FUS060		
HART, 1 pulse output, 1 relay	B	
HART Ex version, 1 pulse output, 1 relay	C	
PROFIBUS PA, 1 pulse/frequency	D	

SITRANS F US SONOKIT 2-path sensor	Article No. 7ME3220-	Ord. Code
	■■■■■-■■■■	■■■
Transducer coaxial cables (with FUS080 only, 15 and 30 m, 70°C (158 °F) cable types)		
4 x 3 m, max. 70 °C (158 °F), the only option for Ex i	0	
4 x 15 m, max. 70 °C (158 °F)	1	
4 x 30 m, high temp. max. 200 °C (392 °F)	2	
4 x 30 m, max. 70 °C (158 °F)	3	
4 x 60 m, max. 70 °C (158 °F) (up to DN 3000)	4	
4 x 90 m, max. 70 °C (158 °F) (up to DN 3000)	5	
4 x 120 m, max. 70 °C (158 °F) (up to DN 3000)	6	
4 x 3 m, high temp. max. 200 °C (392 °F), the only option for Ex i	7	
4 x 15 m, high temp. max. 200 °C (392 °F)	8	
Special version (add Order code):		
No transducer cable, cable length 4 x 3 m, the only option for Ex i	9	R 0 A
No transducer cable, cable length 4 x 15 m	9	R 0 B
No transducer cable, cable length 4 x 30 m	9	R 0 C
No transducer cable, cable length 4 x 60 m (up to DN 3000)	9	R 0 D
No transducer cable, cable length 4 x 90 m (up to DN 3000)	9	R 0 E
No transducer cable, cable length 4 x 120 m (up to DN 3000)	9	R 0 F

1) Mounting tools must be ordered separately as "-Z"-options.

2) Lithium batteries are subject to special transportation regulations according to United Nations "Regulation of Dangerous Goods, UN 3090 and UN 3091". Special transport documentation is required to observe these regulations. This may influence both transport time and costs."

Additional information	Order code
Please add "**-Z**" to Article No. and specify Order code(s) and plain text.	
Material certificate	
EN 10204-3.1, transducer body material	**F30**
EN 10204-3.1, transducer body material	**F31**
EN 10204-3.1, mounting plate material	**F32**
Regional specific approval	
KCC marking for Korea	**W28**
Tag name plate	
Stainless steel TAG plate (1 x 24 x 80 mm), wire fixed. Font size depends on text length: 8 mm for 1 ... 10 characters, 4 mm for 11 ... 20 characters (specify in plain text).	**Y17**
Accessories	
Alignment rods-set for DN 100 ... 750 (4" ... 30") Ø = 25 mm, L = 500 mm, 3 pcs.	**S10**
Alignment rods-set for DN 800 ... 2100 (32" ... 84") Ø = 25 mm, L = 500 mm, 6 pcs.	**S11**
Alignment rods-set for DN 2200 ... 3000 (88" ... 120") Ø = 25 mm, L = 500 mm, 8 pcs.	**S12**
Spanner key for tranducer mounting type SONO 3200 O-ring type	**T11**
Tool set with various mounting/spare parts for SONOKIT installation	**T12**

© Siemens 2020

Selection and ordering data (continued)

Operating instructions

Description	Article No.
SITRANS FUS060	
• English	**A5E01204521**
• German	**A5E02123845**
SITRANS FUS080	
• English	**A5E03059912**
• German	**A5E31628428**
SITRANS F US SONOKIT 2-path	
• English	**A5E02445496**
• German	**A5E02554972**

All literature is available to download for free, in a range of languages, at
https://www.siemens.com/processinstrumentation/documentation

Please use online Product selector to get latest updates:

https://www.pia-portal.automation.siemens.com

Flowmeter SONOKIT accessories and spare parts

Accessories

Potting kit for SONO 3200 terminal housing

Description	Article No.	
Potting kit for terminal box of SONO 3200 transducers for IP68/NEMA 6P (not for Ex sensors)	**FDK:085L2403**	

Tools for SONO 3200 transducers and SONOKIT

Description	Article No.	
Extraction tool for replacement of SONO 3200 O-ring transducers under pressure and for hot-tapping (working conditions: typically water, max. 40 bar and max. 60 °C (max. 580 psi and max. 140 °F))		
For transducer length:		
• Up to 160 mm (6.3")	**FDK:085B5333**	
• Up to 230 mm (9.1")	**FDK:085B5335**	
Angle measurement tool for SONOKIT	**FDK:085B5330**	
Hot-tap drilling tool for SONOKIT, the extraction tool is required, max. pressure 40 bar (580 psi)	**FDK:085B5392**	
Alignment tool for SONOKIT (typically for hot-tapping) For use on pipe sizes in the range DN 300 … DN 1200	**FDK:085B5393**	

Description	Article No.	
Alignment rods-set for DN 100 … 650 (4" … 26"), Ø = 25 mm, L = 500 mm, 3 pcs.	**A5E02609214**	
Alignment rods-set for DN 700 … 1900 (28" … 76"), Ø = 25 mm, L = 500 mm, 6 pcs.	**A5E02609215**	
Alignment rods-set for DN 2000 … 3000 (80" … 120"), Ø = 25 mm, L = 500 mm, 10 pcs.	**A5E02609216**	
Spanner key for tranducer mounting type SONO 3200 O-ring type	**A5E02609218**	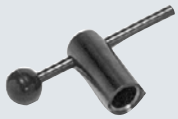
Tool set with various mounting/spare parts for SONOKIT installation	**A5E02609219**	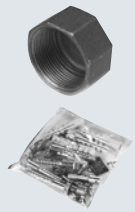

3

© Siemens 2020

Selection and ordering data (continued)

Spare parts

Tranducer SONO 3200 spare parts, complete transducer with ½"-NPT cable glands

Trans-ducer type	Material	Gasket	Pressure rating	Terminal housing	Approval	Temperature range [°C (°F)]	Length [mm (inch)]	Article No.
O-ring	316 SS	O-ring	PN 40	Plastic PA 6.6		-20 … +100 (-420 … +212)	160 (6.3)	**A5E00839476**
O-ring	316 SS	O-ring	PN 40	316 SS		-20 … +200 [1] (-4 … +392)	160 (6.3)	**A5E00839435**
O-ring	316 SS	O-ring	PN 40	Plastic PA 6.6		-20 … +100 (-4 … +212)	230 (9.41)	**A5E00839477**
O-ring	316 SS	O-ring	PN 40	316 SS		-20 … +200 [1] (-4 … +392)	230 (9.41)	**A5E00839437**

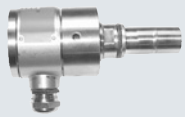

[1] [1] 316 SS housing for -20 … +200 °C (-4 … +392 °F) media temp. but cable glands only for -20 … +100 °C (-4 … +212 °F) ambient temp.

Transducer SONO 3200 spare parts, complete transducer with M20 cable glands

Trans-ducer type	Material	Gasket	Pressure rating	Terminal hous-ing	Approval	Temperature range [°C (°F)]	Length [mm (inch)]	Article No.
O-ring	316 SS	O-ring	PN 40	Plastic PA 6.6		-20 … +100 (-4 … +212)	160 (6.3)	**FDK:085B5454**
O-ring	316 SS	O-ring	PN 40	316 SS		-20 … +200 [1] (-4 … +392)	160 (6.3)	**FDK:085B5455**
O-ring	316 SS	O-ring	PN 40	Plastic PA 6.6		-20 … +100 (-4 … +212)	230 (9.41)	**FDK:085B5458**
O-ring	316 SS	O-ring	PN 40	316 SS	Ex d [2]	-20 … +180 (-4 … +356)	160 (6.3)	**FDK:085B5452**
O-ring	316 SS	O-ring	PN 40	316 SS	Ex I [3]	-10 … +190 (14 … 374)	160 (6.3)	**A5E00836462**
O-ring	316 SS	O-ring	PN 40	316 SS		-20 … +200 [2] (-4 … +392)	230 (9.41)	**FDK:085B5459**

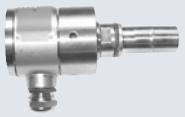

[1] 316 SS housing for -20 … +200 °C (-4 … +392 °F) media temp. but cable glands only for -20 … +100 °C (-4 … +212 °F) ambient temp.

[2] ATEX (Ex) IIC 2G Ex d IIC T3-T6 Gb

[3] For systems with FUS060 ATEX IIC 2G Ex dem [ia/ib] T6/T4/T3

Transducer SONO 3200 spare parts, transducer terminal housing with M20 cable glands

Type	Article No.
Material: PA 6.6, Temperature range: -20 … +100 °C (-4 … +212 °F)	**FDK:085B5501**
Material: AISI 316, Temperature range: -20 … +200 °C (-4 … +392 °F)	**FDK:085B5504**
Material: AISI 316, Ex d [1], Temperature range: -20 … +180 °C (-4 … +356 °F)	**FDK:085B5505**
Material: AISI 316, Ex i [2], Temperature range: -10 … +190 °C (14 … 374 °F)	**A5E00835255**

[1] ATEX (Ex) IIC 2G Ex d IIC T3-T6 Gb

[2] For systems with FUS060 ATEX IIC 2G Ex dem [ia/ib] T6/T4/T3

Transducer SONO 3200 spare parts, transducer terminal housing with ½"-NPT cable glands

Type	Article No.
Material: PA 6.6, Temperature range: -20 … +100 °C (-4 … +212 °F)	**A5E00839460**
Material: AISI 316, Temperature range: -20 … +200 °C (-4 … +392 °F)	**A5E00839427**

© Siemens 2020

Selection and ordering data (continued)

Transducer SONO 3200 spare parts transducer body with insert as well as insert only

Temperature range [°C (°F)]	Gasket	Length [mm (inch)]	Article No.
-20 … +200 (-4 … +392)	O-ring (FFKM O-ring material) [1]	160 (6.3)	**FDK:085B1406**
-20 … +200 (-4 … +392)	O-ring (FKM 602 O-ring material) [2]	160 (6.3)	**FDK:085B5510**
-20 … +200 (-4 … +392)	O-ring	230 (9.41)	**FDK:085B5511**

[1] Chemical resistant O-ring material. Body specially for Ex-approved transducers.
[2] Body specially for standard transducers.

Transducer SONO 3200 gasket

Type	Pressure rating	Material	Temperature range [°C (°F)]	Article No.
Gasket O-ring (3 pcs. for O-ring transducers)	PN 40	FKM	-20 … +200 (-4 … +392)	**FDK:085B1089**

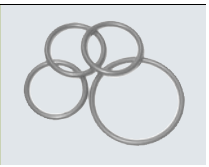

Cables for SONOKIT SONO 3200 transducers with FUS060

Description	Article No.
Coax cable for FUS060, (75 Ω, max. 70 °C (158 °F), black PVC), (2 pcs.)	
• 3 m (9.84 ft)	**A5E00875101**
• 15 m (49.21 ft)	**A5E00861432**
• 30 m (98.43 ft)	**A5E01278662**
• 60 m (196.85 ft)	**A5E01278682**
• 90 m (295.28 ft)	**A5E01278687**
• 120 m (393.70 ft)	**A5E01278698**
High temp. coaxial cable for FUS060; with 0.3 m brown PTFE high temp. transducer part, max. 200 °C (392 °F) and black PVC transmitter part with SMB plug, max. 70 °C (158 °F); (impedance 75 Ω), (2 pcs.)	
• 3 (9.84)	**A5E00875105**
• 15 (49.21)	**A5E00861435**
• 30 (98.43)	**A5E01196952**

Cables for SONOKIT SONO 3200 transducers with FUS080

Description	Article No.
Coax cable for FUS060, (75 Ω, max. 70 C (158 °F), black PVC), (2 pcs.)	
• 15 m (49.21 ft)	**A5E02478541**
• 30 m (98.43 ft)	**A5E02478551**

Transducer holder for SONOKIT SONO 3200 transducers

Description	Article No.
1-path (each incl. 1 pc.)	
• 160 mm (6.3“) stainless steel 45°, DN 100 … DN 150 (4“ … 6“)	**FDK:085L1103**
• 160 mm (6.3“) carbon steel 45°, DN 100 … DN 150 (4“ … 6“)	**FDK:085L1102**
• 230 mm (9.1“) for concrete pipe 60°, DN 600 … DN 2400 (24“ … 96“)	**FDK:085L1107**
• 160 mm (6.3“) stainless steel 60°, DN 200 … DN 2400 (8“ … 96“)	**FDK:085L1105**
• 160 mm (6.3“) carbon steel 60°, DN 200 … DN 2400 (8“ … 96“)	**FDK:085L1104**
2-path (each incl. 1 pc.)	
• 230 mm (9.1“) for concrete pipe 60°, DN 600 … DN 3000 (24“ … 120“)	**FDK:085L1111**
• 160 mm (6.3“) stainless steel 60°, DN 200 … DN 3000 (8“ … 120“)	**FDK:085L1109**
• 160 mm (6.3“) carbon steel 60°, DN 200 … DN 3000 (8“ … 120“)	**FDK:085L1108**

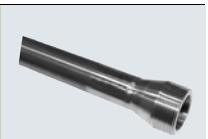

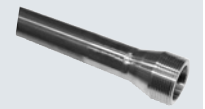

The other transducer holder parts are either completely in stainless steel for the concrete and stainless steel pipes (AISI 316L/1.4404 or similar). For carbon pipes the part welded onto the pipe is in carbon steel (St.37 or similar). Thread part is stainless steel (AISI 316L/1.4404 or similar).

© Siemens 2020

Selection and ordering data (continued)

Mounting plate for SONOKIT SONO 3200 transducers

Description	Article No.	
1-path (each incl. 1 pc.) • Stainless steel plate, 45°, DN 100 … DN 150 (4“ … 6“) • Carbon steel plate, 45°, DN 100 … DN 150 (4“ … 6“) • Stainless steel plate, 60°, DN 200 … DN 2400 (8“ … 96“) • Carbon steel plate, 60°, DN 200 … DN 2400 (8“ … 96“)	**FDK:085L1113** **FDK:085L1112** **FDK:085L1115** **FDK:085L1114**	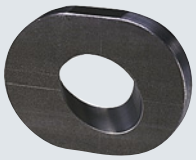
2-path (each incl. 1 pc.) • Stainless steel plate, 60°, DN 200 … DN 3000 (8“ … 120“) • Carbon steel plate, 60°, DN 200 … DN 3000 (8“ … 120“)	**FDK:085L1119** **FDK:085L1118**	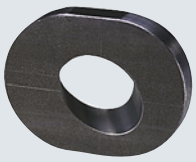

The mounting plates are either completely in stainless steel (AISI 316L/ 1.4404 or similar) or carbon steel (St.37 or similar).

SONO 3200 cable glands

Description	Article No.	
Black PA plastic, cable Ø 5 … 13 mm (1 pc.), temperature range -20 … 100 °C (-4 … +212 °F)	**A5E02246304**	
½" NPT grey PA plastic, cable Ø 5 … 9 mm (1 pc.), temperature range -20 … 100 °C (-4 … +212 °F)	**A5E02246309**	
½" NPT crome-plated brass, cable Ø 5 … 9 mm (1 pc.), temperature range -40 … 100 °C (-40 … +212 °F)	**A5E02246258**	
M20 stainless steel, cable Ø 4 … 6 mm (1 pc.), temperature range -25 … 200 °C (-13 … +392 °F), Ex i approval	**A5E02246194**	
M20 stainless steel, cable Ø 5 … 8 mm (1 pc.), temperature range -60 … 180 °C (-76 … +356 °F), Ex d approval	**A5E02246311**	

© Siemens 2020

Circuit diagrams

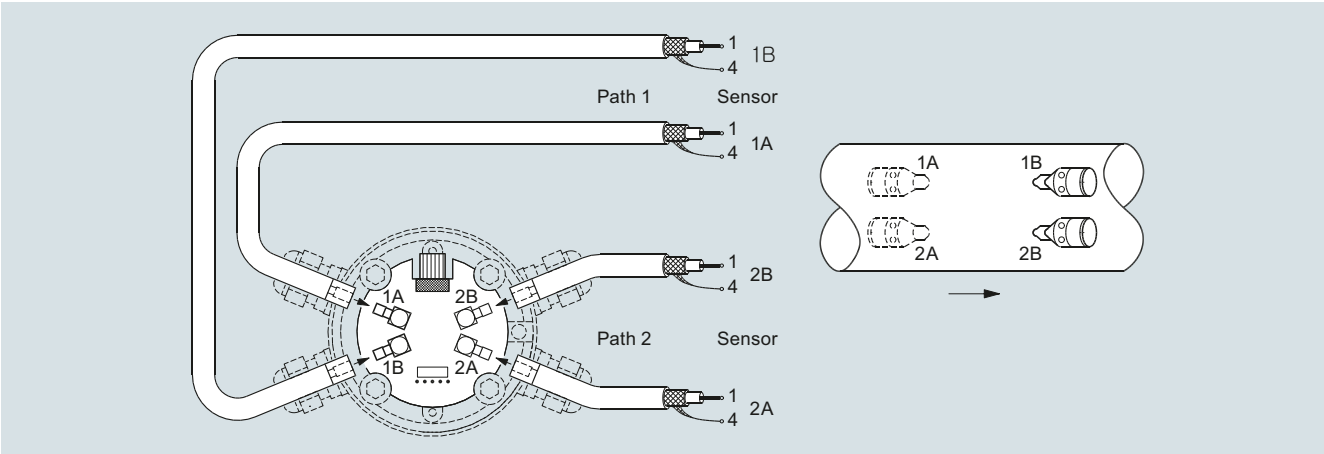

Electrical connection of SITRANS FUS060 and SONOKIT 2-path

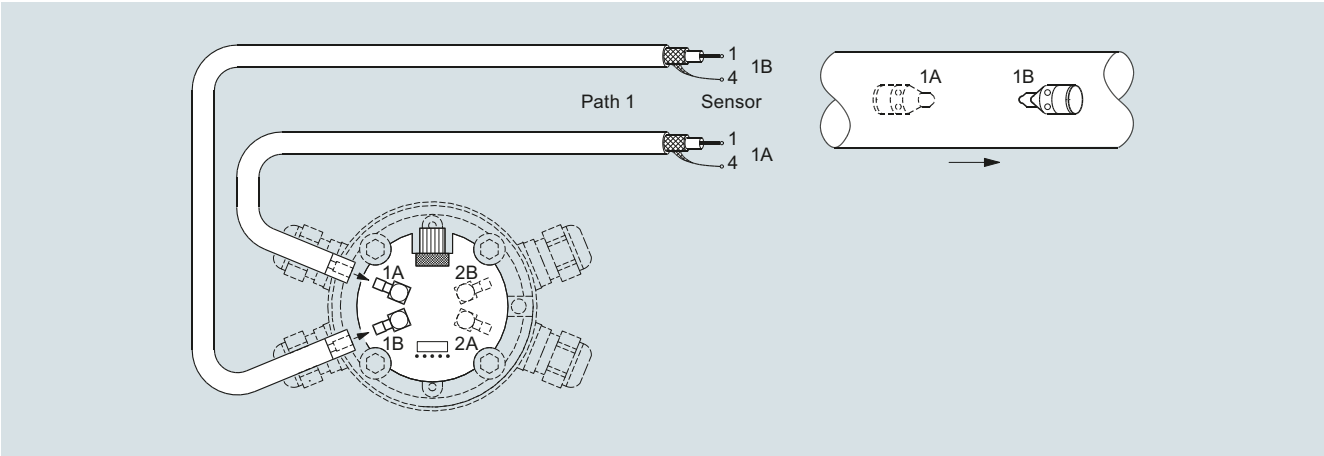

Electrical connection of SITRANS FUS060 and SONOKIT 1-path

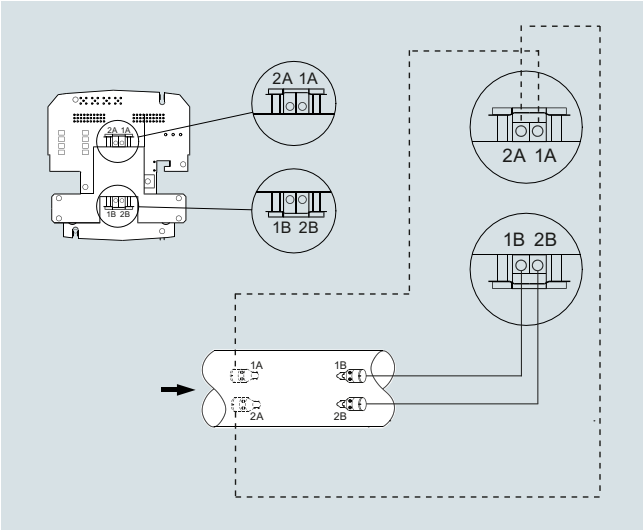

Electrical connection of SITRANS FUS080 and SONOKIT 2-path

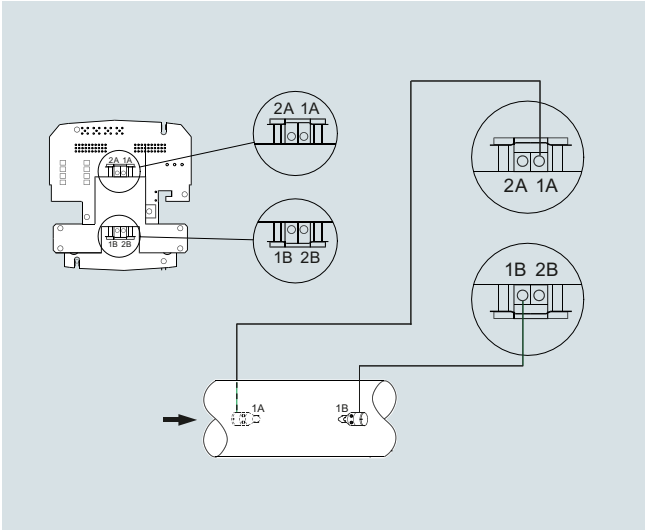

Electrical connection of SITRANS FUS080 and SONOKIT 1-path

© Siemens 2020

SITRANS FUS380 standard flowmeter

Overview

The 2-path flowmeter SITRANS FUS380 comes as battery or mains-powered and is designed to measure water flow in district heating plants, local networks, boiler stations, substations, chiller plants (including glycol mixes) and other general water applications.

The type-approved flowmeter version is named SITRANS FUE380 – see page 3/301.

Technically, the meter types SITRANS FUS380 and SITRANS FUE380 are completely identical, only difference is the calibration limit and the type approval for custody transfer.

Benefits

- Battery-powered up to 6 years
- 115/230 V mains-powered with back-up battery option in case of mains power failure
- Fast measuring frequency 15 Hz/0.5 Hz (230 V AC/Battery)
- Easy one-button straight forward display
- 2-path measuring principle for optimum accuracy
- Compact or remote mounting
- Measures on most district water qualities and water conductivities
- No pressure drop
- Long-term stability
- 2 galvanically isolated digital outputs for easy connection to a calculator (potential-free)
- Analog output 4 to 20 mA
- Bidirectional measurement, with 2 totalizers and outputs
- Dynamic range q_i (min) : q_s (max) up to 1:400

Application

The main application for SITRANS FUS380 is measurement of water flow or water flow in energy meter systems in district heating networks or chilled water (including glycol mixes).

Design

The 2-path design of SITRANS FUS380 ensures maximum accuracy under short inlet conditions. The flowmeter consists of a flow sensor pipe, 4 transducers/transducer cables and a transmitter SITRANS FUE080.

The unit is available in a compact or a remote version. Both versions are pre-mounted with short coax-cables. Remote transmitter up to a distance of 30 m by one Sensor link cable (SSL).

Compact mounting is only possible up to 120 °C (248 °F). The sensor must be isolated to protect transmitter from heat. The transmitter is available in an IP67/NEMA 4X/6 enclosure.

Function

Together with the SIMATIC PDM tool the FUS380 offers the possibility of testing and verifying the flowmeter on site and creating a printed "Qualification Certificate" with specific data that defines the quality status of the measurement.

The Qualification Certificate shows information about the actual status of the flowmeter:

- General settings, flowmeter and battery information, totalizer values, and pulse output settings
- Detailed information about the transmitter and the sensor functionality, and a main parameter list for evaluating the functionality of the flowmeter

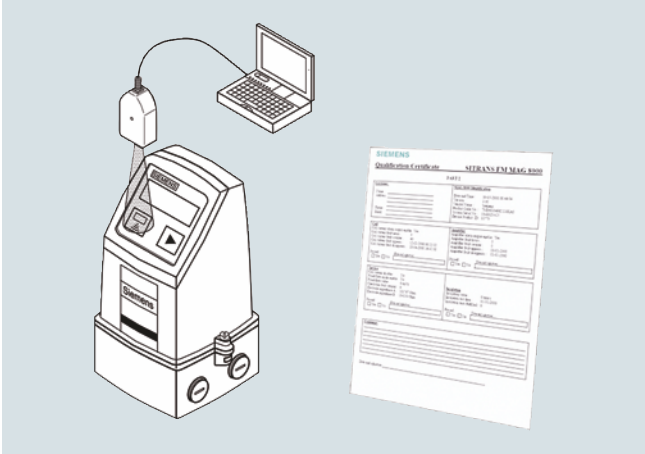

Integration

The flowmeter digital output is often used as input for an energy meter or as input for digital systems for remote reading.

SITRANS FUS380 has two digital output functions that can be individually selected.

Pulse output rate is defined when ordering. To get optimal benefit the pulse value must be selected as low as possible.

If the flowmeter forms part of an energy meter system for custody transfer, no further approvals are needed, except possible local approvals on the flowmeter.

© Siemens 2020

Configuration

Selection guide SITRANS FUS380, standard version

DN	Q_s (m^3/h)	Q_{max} (m^3/h) (105 % of Q_s)	Q_p (m^3/h)	Q_i (m^3/h) (1:100 of Q_p)	Cut-off (m^3/h) (95 % of Q_i)	Cut-off (% of Q_{max})	Typical pulse value[1] (l/pulse)
50	15	15.75	15	0.15	0,143	0,90	1
50	45	47.25	15	0.15	0,143	0,30	1
50	45	47.25	30	0.3	0.285	0,60	1
65	25	26.25	25	0.25	0.238	0,90	1
65	72	75.6	25	0.25	0.238	0,31	1
65	72	75.6	50	0.5	0,475	0,63	1
80	40	42	40	0.4	0,380	0,90	2.5
80	120	126	40	0.4	0,380	0,30	2.5
80	120	126	80	0.8	0,760	0,60	2.5
100	60	63	60	0.6	0,570	0,90	2.5
100	180	189	60	0.6	0,570	0,30	2.5
100	240	252	120	1.2	1,140	0,45	2.5
125	100	105	100	1	0,950	0,90	2.5
125	280	294	100	1	0,950	0,32	2.5
125	400	420	200	2	1,900	0,45	2.5
150	150	157.5	150	1.5	1,425	0,90	10
150	420	441	150	1.5	1,425	0,32	10
150	560	588	300	3	2,850	0,48	10
200	250	262.5	250	2.5	2,375	0,90	10
200	700	735	250	2.5	2,375	0,32	10
200	900	945	500	5	4,750	0,50	10
250	400	420	400	4	3,800	0,90	10
250	1120	1176	400	4	3,800	0,32	10
250	1400	1470	800	8	7,600	0,52	10
300	560	588	560	5.6	5,320	0,90	50
300	1560	1638	560	5.6	5,320	0,32	50
300	2100	2205	1120	11.2	10,640	0,48	50
350	750	787.5	750	7.5	7,125	0,90	50
350	2100	2205	750	7.5	7,125	0,32	50
350	2800	2940	1500	15	14,250	0,48	50
400	950	997.5	950	9.5	9,025	0,90	50
400	2660	2793	950	9.5	9,025	0,32	50
400	3600	3780	1900	19	18,050	0,48	50
500	1475	1548.75	1475	14.75	14,013	0,90	100
500	4130	4336.5	1475	14.75	14,013	0,32	100
500	5500	5775	2950	29.5	28,025	0,49	100
600	2150	2257.5	2150	21.5	20,425	0,90	100
600	6020	6321	2150	21.5	20,425	0,32	100
600	8000	8400	4300	43	40,850	0,49	100
700	2900	3045	2900	29	27,550	0,90	100
700	8120	8526	2900	29	27,550	0,32	100
700	10 800	11 340	5800	58	55,100	0,49	100
800	3800	3990	3800	38	36,100	0,90	100
800	10 640	11 172	3800	38	36,100	0,32	100
800	14 200	14 910	7600	76	72,200	0,48	100
900	5000	5250	3800	38	36,100	0,69	100
900	14 000	14 700	5000	50	47,500	0,32	100
900	20 000	21 000	5000	50	47,500	0,23	100
1000	6000	6300	3800	38	36,100	0,57	100
1000	16 800	17 640	6000	60	57,000	0,32	100
1000	24 000	25 200	12 000	120	114,000	0,45	100
1200	9000	9450	3800	38	36,100	0,38	100
1200	25 200	26 460	9000	90	85,500	0,32	100
1200	36 000	37 800	18 000	180	171,000	0,45	100

The values Q_i, Q_p and Q_s are shown on the system label of the FUS380. Q_i (Q_{min}) means the minimal and Q_p (Q_{nom}) the nominal flow rate. Q_s is the highest operatable flow rate. The maximum flow rate (Q_{max}) is 105 % of Q_s. The low flow cut-off is 50 % of Q_i.

In order to obtain best pulse output resolution in the range Q_{min} to Q_s of approx. 100 Hz at Q_s, two or three flow values for every dimension can be selected at ordering. Therefore the ordering data table also shows Q_p (Q_n). This flow rate is between Q_i (Q_{min}) and Q_s and indicates the normal or typical flow.

To get optimal benefit of the pulses the pulse value and pulse length shall be selected as low as possible. The following calculation formula can be used for determining the shortest pulse value at a pulse length of 5 ms: L/pulse > Q_s (m^3/h) /360.
For example Q_s = 300 m^3/h; L/pulse > 300/360; L/pulse > 0.83; therefore the pulse value must be 1 l/pulse

[1] Typical pulse values for SITRANS FUS380 with pulse length 5 ms. Other values are possible - please see the selections at the 7ME340 order codes.

© Siemens 2020

Technical specifications

Sensor design	2-path sensor with flanges and inline transducers wet-calibrated from factory
Nominal size (DN 50 … DN 80 in bronze)	DN 50, 65, 80, 100, 125, 150, 200, 250, 300, 350, 400, 500, 600, 700, 800, 1000, 1200
Pressure rate	PN 16, PN 25, PN 40 EN 1092-1 flanges: • type 01 (B): DN 100 to DN 125 • type 11 (B): DN 150 to DN 1200 • type 11 (B) 'design': DN 50 to DN 80
Pipe material	• DN 100 … DN 1200: Carbon Steel EN 1.0345/P235 GH, painted in light-gray. • DN 50 … DN 80: Die-cast bronze G-CuSn10/W2.1050.01 (EN 1982)
Transducer design	• DN 100 … DN 1200: Inline version and welded onto the pipe • DN 50 … DN 80: Screwed into the pipe
Transducer material	Stainless steel (AISI 316/1.4404)/brass ($CuZn_{36}Pb_2As$)
Sensor operating conditions	
Ambient temperature	
• Operation	-10 … +60 °C (14 … 140 °F) (MID version: -10 … +55 °C (14 … 131 °F))
• Storage	-40 … +85 °C (-40 … +185 °F)
Measured media	Heating water, according to VDI-2035 (pH 8.2 - 10.5), industrial VdTÜV information sheet 1466 and AGFW information sheet FW 510.
Media/surface temperature	
• DN 100 … DN 1200	Remote: 2 … 200 °C (35.6 … 392 °F)
• DN 50 … DN 80	Remote: 2 … 150 °C (35.6 … 302 °F)
• DN 50 ... DN 1200	Compact: 2 … 120 °C (35.6 … 248 °F)
Degree of protection	Sensor connection IP67/NEMA 4X/6
Max. flow velocity	DN 50 … DN 1200: 9 m/s (29.5 ft/s)
Electromagnetic compatibility	
• Emitted interference	To EN 55011/CISPR-11
• Noise immunity	To EN/IEC 61326-1 (Industry)
Transmitter	
The transmitter related to this system is the SITRANS FUS080. Technical specifications to the FUS080 see page 3/259	
Sensor cable	
Transducer cable length	Pre-mounted with short coax-cables
Sensor link cable length (SSL)	5, 10, 20, 30 m (16.4, 32.8, 65.6, 98.4 ft)
Certificates and approvals	
Conformity certificate (CE)	The devices are supplied as standard with a Siemens Certificate of Conformity on DVD.
Material certificate	Material certificate according EN 10204-3.1 is optionally available.
Calibration report	A standard calibration report is shipped with every flowmeter. Extended accredited ISO/IEC 17025 calibration certificates optionally available
Approvals	No custody transfer approvals

The sensors are approved according to EU directive 2014/68/EU regarding fluid group 1, classified in category III. Design according to EN 13480 (PED Directive).

SITRANS FUS380 uncertainty

	FUS380
Flow value setting	Predefined settings according to dimension
Approval	No approval
Flow rate v_f	0.02 … 9 m/s (0.065 … 29.5 ft/s)
Output A	Pulse: forward, reverse, forward net, reverse net (Preset: forward)
Output B	Pulse forward, reverse, forward net, reverse net, alarm, call-up (Preset: alarm)
Pulse value A & B (depending on DN value)	0.1 l/p, 0.25 l/p, 0.5 l/p, 1 l/p, 2.5 l/p, 10 l/p, 25 l/p, 50 l/p, 100 l/p, 250 l/p, 500 l/p, 1 m^3/p, 2.5 m^3/p, 5 m^3/p, 10 m^3/p, 25 m^3/p, 50 m^3/p, 100 m^3/p, 250 m^3/p, 500 m^3/p, 1000 m^3/p
Pulse width	5/10/20/50/100/200/500 ms
Flow unit setup	Preset: m^3/h
Volume unit setup	Preset: m^3

Flowmeter Calibration and traceability

To ensure continuous accurate measurement, flowmeters must be calibrated. The calibration is conducted at Siemens flow facilities with traceable instruments referring directly to the physical unit of measurement according to the International System of Units (SI).

Therefore, the calibration certificate ensures recognition of the test results worldwide, including the US (NIST traceability). Siemens offers accredited calibrations assured to ISO 17025 in the flow range from 0.0001 m^3/h to 10 000 m^3/h. Siemens Flow Instruments accredited laboratories are recognized by ILAC MRA (International Laboratory Accreditation Corporation - Mutual Recognition Arrangement) ensuring international traceability and recognition of the test results worldwide.

A standard calibration certificate with Q_n as selected flow is shipped with each SITRANS FUS380. This production calibration protocol consists of 2 x 3 points at Q_i, 10 % Q_p and Q_p (max. 4 200 m^3/h).

Accuracy SITRANS FUS380:

± 0.5 % for 0.5 m/s < v < 10 m/s and ± 0.25/$V_{act.}$ [%] below 0.5 m/s

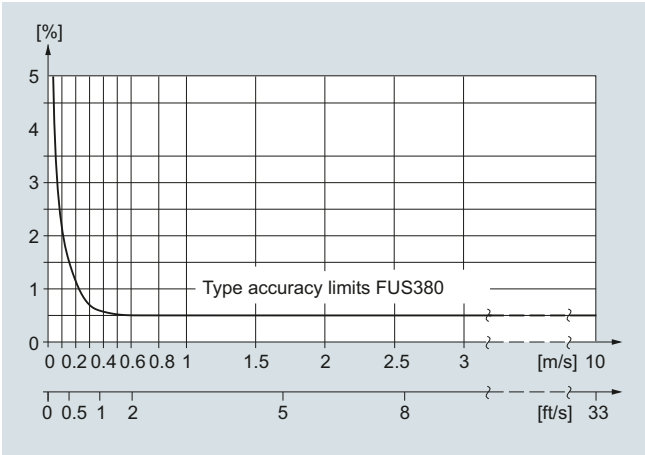

© Siemens 2020

Selection and ordering data

Article No.

Flowmeter SITRANS FUS380 (standard) ↗ **7ME3400-** Ord. Code

■ ■ ■ ■ **0** - ■ ■ **A** ■ ■ ■ ■

↗Click on the Article No. for the online configuration in the PIA Life Cycle Portal.

Diameter	Approval	Pressure rating	Flow setting [m^3/h] Q_p (Q_n) is the normal flow according to the approval requirements. Q_p and Q_s is shown on the system label. Q_p (Q_n)	Q_s	
Pipe material: Die-cast bronze					
DN 50 (2")	EN 1434	PN 40	15	15	**1 A**
DN 50 (2")	EN 1434	PN 40	15	45	**1 C**
DN 50 (2")	OIML R75	PN 40	30	45	**1 D**
DN 65 (2½")	EN 1434	PN 40	25	25	**1 E**
DN 65 (2½")	EN 1434	PN 40	25	72	**1 G**
DN 65 (2½")	OIML R75	PN 40	50	72	**1 H**
DN 80 (3")	EN 1434	PN 40	40	40	**1 J**
DN 80 (3")	EN 1434	PN 40	40	120	**1 L**
DN 80 (3")	OIML R75	PN 40	80	120	**1 M**
Pipe material: Carbon steel					
DN 100 (4")	EN 1434	PN 16, PN 40	60	60	**1 N**
DN 100 (4")	EN 1434	PN 16, PN 40	60	180	**1 Q**
DN 100 (4")	OIML R75	PN 16, PN 40	120	240	**1 R**
DN 125 (5")	EN 1434	PN 16, PN 40	100	100	**1 S**
DN 125 (5")	EN 1434	PN 16, PN 40	100	280	**1 U**
DN 125 (5")	OIML R75	PN 16, PN 40	200	400	**1 V**
DN 150 (6")	EN 1434	PN 16, PN 40	150	150	**2 A**
DN 150 (6")	EN 1434	PN 16, PN 40	150	420	**2 C**
DN 150 (6")	OIML R75	PN 16, PN 40	300	560	**2 D**
DN 200 (8")	EN 1434	PN 16, PN 25, PN 40	250	250	**2 E**
DN 200 (8")	EN 1434	PN 16, PN 25, PN 40	250	700	**2 G**
DN 200 (8")	OIML R75	PN 16, PN 25, PN 40	500	900	**2 H**
DN 250 (10")	EN 1434	PN 16, PN 25, PN 40	400	400	**2 J**
DN 250 (10")	EN 1434	PN 16, PN 25, PN 40	400	1120	**2 L**
DN 250 (10")	OIML R75	PN 16, PN 25, PN 40	800	1400	**2 M**
DN 300 (12")	EN 1434	PN 16, PN 25	560	560	**2 N**
DN 300 (12")	EN 1434	PN 16, PN 25	560	1560	**2 Q**
DN 300 (12")	OIML R75	PN 16, PN 25	1120	2100	**2 R**
DN 350 (14")	EN 1434	PN 16, PN 25	750	750	**2 S**
DN 350 (14")	EN 1434	PN 16, PN 25	750	2100	**2 U**
DN 350 (14")	OIML R75	PN 16, PN 25	1500	2800	**2 V**
DN 400 (16")	EN 1434	PN 16, PN 25	950	950	**3 A**
DN 400 (16")	EN 1434	PN 16, PN 25	950	2660	**3 C**
DN 400 (16")	OIML R75	PN 16, PN 25	1900	3600	**3 D**
DN 500 (20")	EN 1434	PN 16, PN 25	1475	1475	**3 J**
DN 500 (20")	EN 1434	PN 16, PN 25	1475	4130	**3 L**
DN 500 (20")	OIML R75	PN 16, PN 25	2950	5500	**3 M**
DN 600 (24")	EN 1434	PN 16, PN 25	2150	2150	**3 S**
DN 600 (24")	EN 1434	PN 16, PN 25	2150	6020	**3 U**
DN 600 (24")	OIML R75	PN 16, PN 25	4300	8000	**3 V**
DN 700 (28")	EN 1434	PN 16, PN 25	2900	2900	**4 E**
DN 700 (28")	EN 1434	PN 16, PN 25	2900	8120	**4 G**
DN 700 (28")	OIML R75	PN 16, PN 25	5800	10800	**4 H**
DN 800 (32")	EN 1434	PN 16, PN 25	3800	3800	**4 N**
DN 800 (32")	EN 1434	PN 16, PN 25	3800	10640	**4 Q**
DN 800 (32")	OIML R75	PN 16, PN 25	7600	14200	**4 R**

© Siemens 2020

Selection and ordering data

Article No.

Flowmeter SITRANS FUS380 (standard) — **7ME3400-** ■■■■0 - ■■A■ — Ord. Code ■■■

Diameter	Approval	Pressure rating	Flow setting [m³/h] Q_p (Q_n)	Flow setting [m³/h] Q_s	Article No.
Remote only					
DN 900 (36")	EN 1434	PN 16, PN 25	5000	5000	5 A
DN 900 (36")	EN 1434	PN 16, PN 25	5000	14000	5 C
DN 900 (36")	OIML R75	PN 16, PN 25	10000	20000	5 D
DN 1000 (40")	EN 1434	PN 16, PN 25	6000	6000	5 J
DN 1000 (40")	EN 1434	PN 16, PN 25	6000	16800	5 L
DN 1000 (40")	OIML R75	PN 16, PN 25	12000	24000	5 M
DN 1200 (48")	EN 1434	PN 16	9000	9000	5 S
DN 1200 (48")	EN 1434	PN 16	9000	25200	5 U
DN 1200 (48")	OIML R75	PN 16	18000	36000	5 V

	Article No.
Flange norm and pressure rating	
System without sensor - only a transmitter FUS080 as spare part - settings as defined with this Article No.	A
EN 1092-1	
• PN 16 (DN 100 ... 1200)	C
• PN 25 (DN 200 ... 1000)	D
• PN 40 (DN 50 ... 250)	E
Compact/remote connection	
Note: Sensor cable always firmly connected to connection box.	
Compact version, liquid max. 120 °C (248 °F)	
Remote version, liquid max. 150/200 °C (302/392 °F)	0
Sensor link cable (SSL)	
• 5 m (16.4 ft)	2
• 10 m (32.8 ft)	3
• 20 m (65.6 ft)	4
• 30 m (98.4 ft)	5
Pulse output value setup	
To get optimal benefit of the pulses the pulse value and pulse length shall be selected as low as possible. The following calculation formula can be used for determining the shortest pulse value at a pulse length of 5 ms: L/pulse > Q_s (m³/h) /360. For example Q_s = 300 m³/h; L/pulse > 300/360; L/pulse > 0.83; therefore the pulse value must be 1 l/pulse	
Pulse value	
• 0.1 l/pulse	1
• 1 l/pulse	2
• 2.5 l/pulse	3
• 10 l/pulse	4
• 50 l/pulse	5
• 100 l/pulse	6
• 250 l/pulse	7
• 1 m³/pulse	8
• 0.25 l/pulse	9 N 0 A
• 0.5 l/pulse	9 N 0 B
• 5 l/pulse	9 N 0 C
• 25 l/pulse	9 N 0 D
• 500 l/pulse	9 N 0 E
• 2.5 m³/pulse	9 N 0 F
• 5 m³/pulse	9 N 0 G
• 10 m³/pulse	9 N 0 H
• 25 m³/pulse	9 N 0 J
• 50 m³/pulse	9 N 0 K
• 100 m³/pulse	9 N 0 L
• 250 m³/pulse	9 N 0 M
• 500 m³/pulse	9 N 0 N
• 1000 m³/pulse	9 N 0 P

© Siemens 2020

Selection and ordering data

	Article No.
Flowmeter SITRANS FUS380 (standard)	**7ME3400-** ■■■■ **0** - ■■ **A** ■ ■■■ Ord. Code
Flowmeter SITRANS FUS380 (standard)	
Transmitter variant FUS080 power/analaog output	
115 ... 230 V AC	**B**
3.6 V Lithium battery, dual pack is included	**D**
115 ... 230 V AC, backup 3.6 V DC Lithium battery, single pack is included	**E**
3.6 V battery version (no battery pack included)	**G**
Option with 4 ... 20 mA analog output module • 115 ... 230 V AC	**R**
• 115 ... 230 V AC, backup 3.6 V DC, Lithium battery, single pack is included	**U**
Note: Lithium batteries are subject to special transportation regulations according to United Nations "Regulation of Dangerous Goods, UN 3090 and UN 3091". Special transport documentation is required to observe these regulations. This may influence both transport time and costs.	
Pulse width setup	
Pulse width	
5 ms (standard)	**2**
10 ms	**3**
20 ms	**4**
50 ms	**5**
100 ms	**6**
200 ms	**7**
500 ms	**8**

Additional information Please add "**-Z**" to Article No. and specify Order code(s) and plain text.	Order code
Calibration/certificate FUS380	
Production calibration for DN 50 ... 1200 with Q_n as selected in diameter. Incl. Calibration protocol: 2 x 3 points, Q_i, 10 % Q_p and Q_p (max. 8000 m^3/h).	**Included**
Accredited Siemens ISO/IEC 17025 calibration for DN 50 ... 200 with Q_n as selected in diameter. Certificate: 2 x 5 points, Q_i, 5 %, 10 %, 50 % and 100 % of Q_p (max. 630 m^3/h).	**D20**
Accredited Siemens ISO/IEC 17025 calibration for DN 250 ... 600 with Q_n as selected in diameter. Certificate: 2 x 5 points, 5 %, 10 %, 50 % and 100 % of Q_p (max. 2800 m^3/h).	**D21**
Accredited Siemens ISO/IEC 17025 calibration, DN 500 ... 1200 with Q_n as selected in diameter. Certificate: 2 x 5 points, Q_i, 5 %, 10 %, 50 % and 100 % of Q_p (max. 8000 m^3/h).	**D22**
Output B as reverse flow pulses. No calibration/verification of this function.	**E21**
Material certificate	
EN 10204-3.1 (pipe material)	**C12**
Regional specific approval	
KCC marking for Korea	**W28**
Tag name plate	
Stainless steel TAG plate (1 x 24 x 80 mm), wire fixed. Font size depends on text length: 8 mm for 1 ... 10 characters, 4 mm for 11 ... 20 characters (specify in plain text).	**Y17**

Please use online Product selector to get latest updates:

https://www.pia-portal.automation.siemens.com

Flowmeter SITRANS FUS380 operating instructions, accessories and spare parts

Operating instructions

Description	Article No.
• English	**A5E00730100**
• German	**A5E00740611**

All literature is available to download for free, in a range of languages, at
http://www.siemens.com/processinstrumentation/documentation

For accessories and spare parts see the section about FUS080/FUE080.

© Siemens 2020

Dimensional drawings

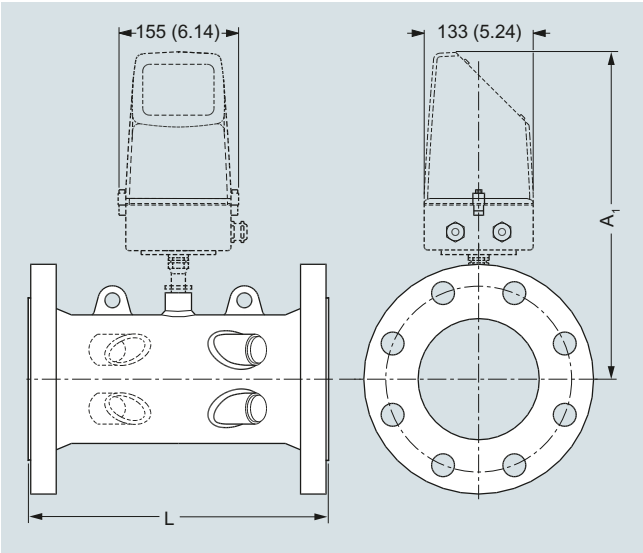

Transmitter IP67/NEMA 4X/6, wall mounting

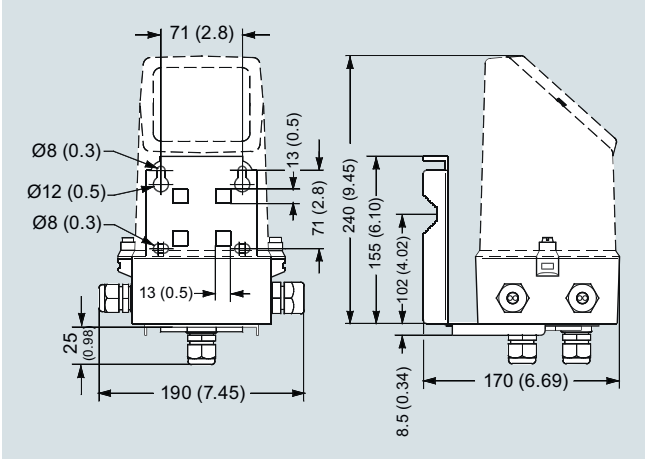

Dimensions in mm (inch)

Sensor dimensions for FUS380 and FUE380

Size	PN 16		PN 25		PN 40			
	L	Weight	L	Weight	L	Weight	A_1	Lift hug
DN	mm	kg	mm	kg	mm	kg	mm	
50	-	-	-	-	300 +0/-2	10	350	No
65	-	-	-	-	300 +0/-2	15	363	No
80	-	-	-	-	350 +0/-2	18	370	No
100	350 +0/-2	15	-	-	350 +0/-2	18	372	No
125	350 +0/-2	18	-	-	350 +0/-2	24	385	No
150	500 +0/-3	28	-	-	500 +0/-3	34	399	No
200	500 +0/-3	38	500 +0/-3	47	500 +0/-3	55	425	Yes
250	600 +0/-3	60	600 +0/-3	76	600 +0/-3	91	452	Yes
300	500 +0/-3	66	500 +0/-3	81	-	-	478	Yes
350	550 +0/-3	94	550 +0/-3	121	-	-	495	Yes
400	600 +0/-3	124	600 +0/-3	153	-	-	520	Yes
500	625 +0/-3	194	625 +0/-3	231	-	-	570	Yes
600	750 +0/-3	303	750 +0/-3	365	-	-	622	Yes
700	875 +0/-3	361	875 +0/-3	565	-	-	673	Yes
800	1000 +0/-3	494	1000 +0/-3	770	-	-	724	Yes
900	1230 +6/-6	535	1300 +6/-6	835	-	-	775	Yes
1000	1300 +6/-6	594	1370 +6/-6	1000	-	-	826	Yes
1200	1360 +6/-6	732	-	-	-	-	928	Yes

Notes:

- Weight for transmitter/electronics 1.5 kg (compact version) or approximately 5 kg (remote version including 10 m cable set)
- - Means not available
- All weights are **approximate**
- For flange values - see norm EN 1092-1

© Siemens 2020

Dimensional drawings (continued)

Size	PN 16		PN 25		PN 40			
	L	Weight	L	Weight	L	Weight	A_1	Lift hug
inch	inch	lb	inch	lb	inch	lb	inch	
2	-	-	-	-	11.81 +0/-0.08	22	13.78	No
2½	-	-	-	-	11.81 +0/-0.08	33	14.30	No
3	-	-	-	-	13.78 +0/-0.08	40	14.57	No
4	13.78 +0/-0.08	33	-	-	13.78 +0/-0.08	40	14.65	No
5	13.78 +0/-0.08	40	-	-	13.78 +0/-0.08	53	15.16	No
6	19.68 +0/-0.12	62	-	-	19.68 +0/-0.12	75	15.71	No
8	19.68 +0/-0.12	84	19.68 +0/-0.12	104	19.68 +0/-0.12	121	16.74	Yes
10	23.62 +0/-0.12	132	23.62 +0/-0.12	168	23.62 +0/-0.12	201	17.80	Yes
12	19.68 +0/-0.12	146	19.68 +0/-0.12	179	-	-	18.82	Yes
14	21.65 +0/-0.12	207	21.65 +0/-0.12	267	-	-	19.49	Yes
16	23.62 +0/-0.12	273	23.62 +0/-0.12	337	-	-	20.48	Yes
20	24.61 +0/-0.12	428	24.61 +0/-0.12	509	-	-	22.45	Yes
24	29.53 +0/-0.12	668	29.53 +0/-0.12	805	-	-	24.49	Yes
28	34.45 +0/-0.12	796	34.45 +0/-0.12	1246	-	-	26.50	Yes
32	39.37 +0/-0.12	1089	39.37 +0/-0.12	1698	-	-	28.51	Yes
36	48.43 +0/-0.24	1179	51.18 +0/-0.24	1841	-	-	30.52	Yes
40	51.18 +0/-0.24	1310	53.94 +0/-0.24	2205	-	-	32.52	Yes
48	53.34 +0/-0.24	1614	-	-	-	-	36.54	Yes

Notes:

- Weight for transmitter/electronics 3.3 lb (compact version) or approximately 11 lb (remote version including 32.8 ft cable set)
- - Means not available
- All weights are **approximate**
- For flange values - see norm EN 1092-1

© Siemens 2020

Circuit diagrams

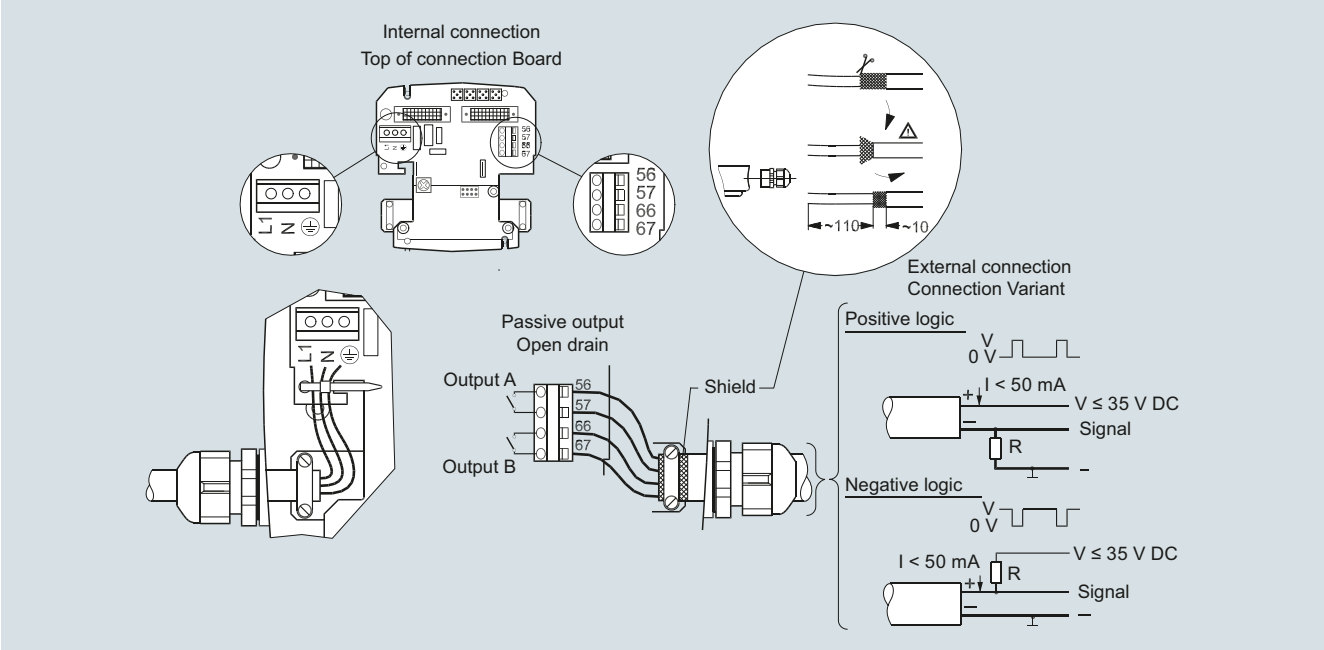

Electrical connection of transmitter SITRANS FUS/FUE380

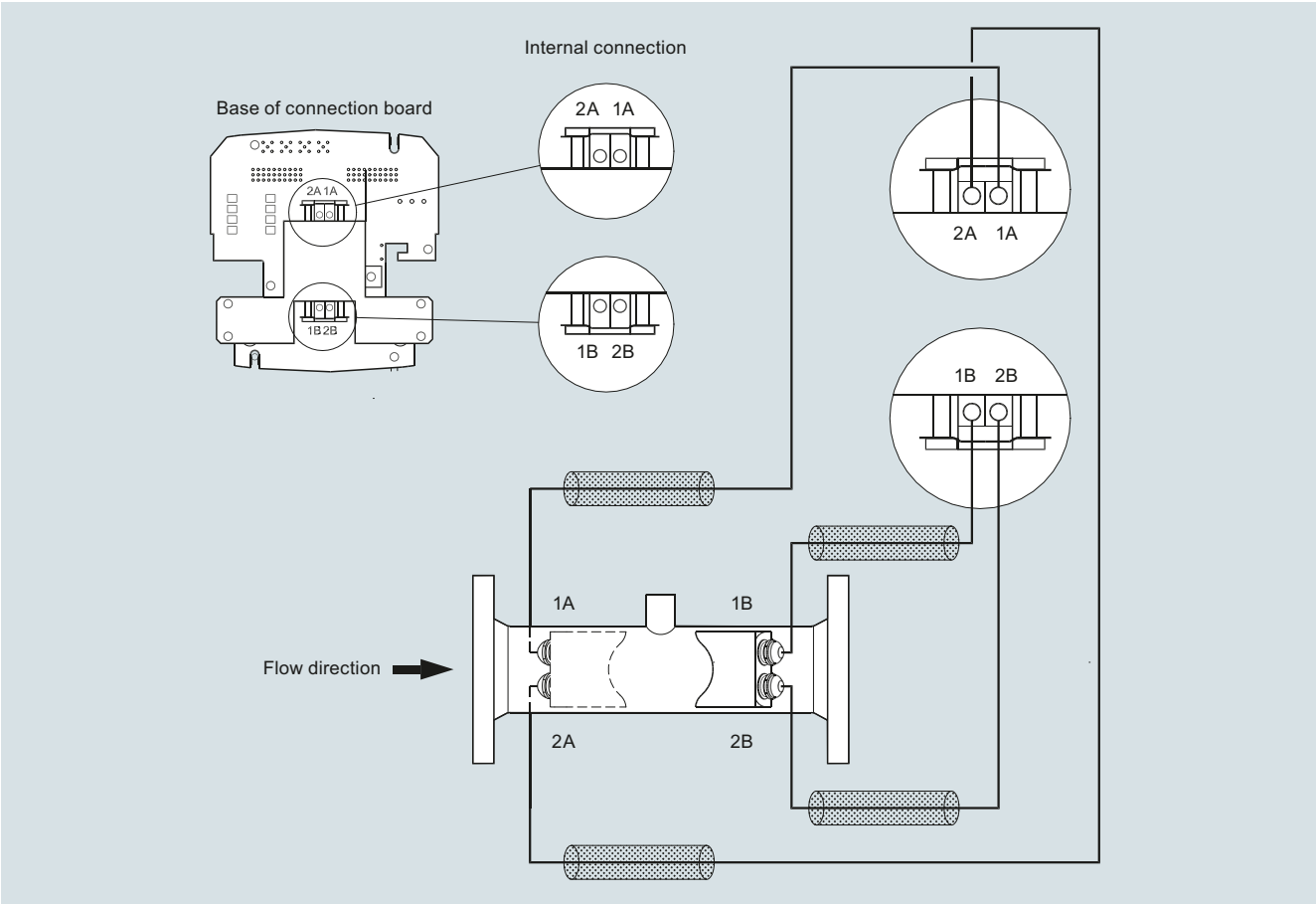

Electrical connection of sensor SITRANS FUS/FUE380

© Siemens 2020

Overview

The 2-path flowmeter SITRANS FUE380 comes as battery or mains-powered and is designed to measure water flow in district heating plants, local networks, boiler stations, substations, chiller plants (including glycol mixes without type approval) and other general water applications.

The flowmeter FUE380 is approved according to energy meter standards EN 1434 class 2, OIML R 75 class 2 and MID class 2. Metrological parameters are protected against manipulation. The type-approved flowmeter version is named SITRANS FUE380. For a standard flowmeter type FUS380 without a type approval, see the section about FUS380.

Technically, the meter types SITRANS FUS380 and SITRANS FUE380 are completely identical, only difference is the calibration limit and the type approval for custody transfer.

Benefits

- Battery-powered up to 6 years
- 115/230 V mains-powered with back-up battery option in case of mains power failure
- Fast measuring frequency 15 Hz/0.5 Hz (230 V AC/Battery)
- Easy one-button straight forward display
- 2-path measuring principle for optimum accuracy
- Compact or remote mounting
- Measures on most district water qualities and water conductivities
- No pressure drop
- Long-term stability
- 2 galvanically isolated digital outputs for easy connection to a calculator (potential-free)
- Analog output 4 to 20 mA
- Bidirectional measurement, with 2 totalizers and outputs
- Dynamic range Q_i:Q_p up to 1:50/100 or max. range Q_i:Q_s up to 1:400

Application

The main application for SITRANS FUE380 is measurement of water flow or water flow in energy meter systems for custody transfer in district heating networks or chilled water (including glycol mixes without type approval).

Combined with an energy calculator and a pair of temperature sensors, SITRANS FUE380 can be used as part of an energy meter system. For this purpose Siemens offers energy calculator SITRANS FUE950.

Design

The 2-path design of SITRANS FUE380 ensures maximum accuracy under short inlet conditions. The approved flowmeter consists of a flow sensor pipe, 4 transducers/transducer cables and a transmitter SITRANS FUE080.

The unit is available in a compact or a remote version. Both versions are pre-mounted with short coax-cables. Remote transmitter up to a distance of 30 m by one Sensor link cable (SSL).

Compact mounting is only possible up to 120 °C (248 °F). The sensor must be isolated to protect transmitter from heat. The transmitter is available in an IP67/NEMA 4X/6 enclosure.

FUE380 MI-004 approval

The SITRANS FUE380 program is type-approved according to international energy meter standard EN 1434. On 1 November 2006 the MI-004 energy meter directive became effective providing that all energy meters with a MI-004 verification label can be sold across the EU borders.

The FUE380 are MI-004 verified and labeled products according to Directive 2014/32/EU of the European Parliament and Council of 26 February, 2014 on measuring instruments, Annex IV Thermal Energy Meters (MI-004), in sizes from DN 50 to DN 1200.

The MID certification is obtained as module B + module D approvals according to the above-mentioned directive.

Module B: MI-004 Type approval according to EN 1434: 2007 (approved for media water)

Module D: Quality insurance MID approval of production

The MID system label with the approval information is placed on the side of the transmitter and on the sensor. An example of the product label is shown below:

FUE380 transmitter label (with MID first verfication)

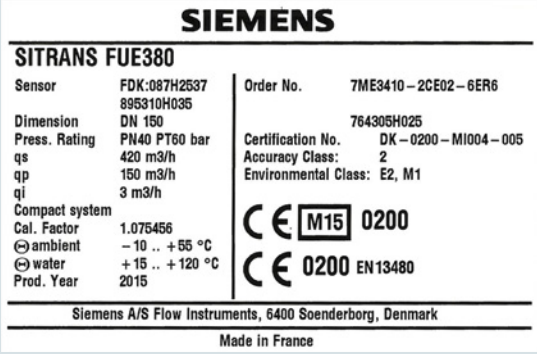

FUE380 sensor label (with MID first verification)

© Siemens 2020

SITRANS FUE380 flowmeter with CT approval

Function

Together with the SIMATIC PDM tool the FUE380 offers the possibility of testing and verifying the flowmeter on site and creating a printed "Qualification Certificate" with specific data that defines the quality status of the measurement.

The Qualification Certificate shows information about the actual status of the flowmeter:

- General settings, flowmeter and battery information, totalizer values, and pulse output settings
- Detailed information about the transmitter and the sensor functionality, and a main parameter list for evaluating the functionality of the flowmeter

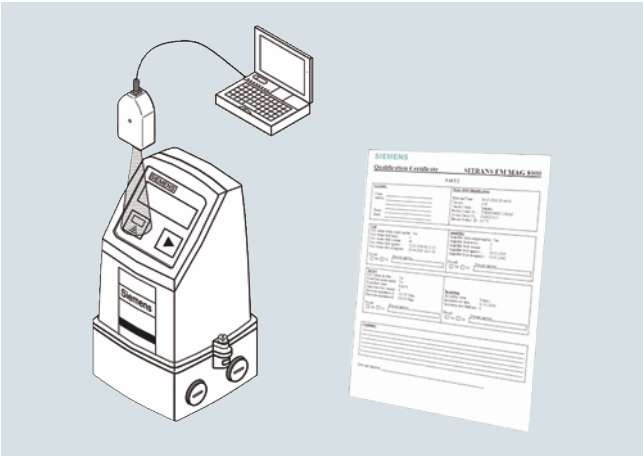

Integration

The flowmeter digital output is often used as input for an energy meter or as input for digital systems for remote reading.

SITRANS FUE380 has two digital output functions that can be individually selected.

Pulse output rate is defined when ordering. To get optimal benefit the pulse value must be selected as low as possible.

If the flowmeter forms part of an energy meter system for custody transfer, no further approvals are needed, except possible local approvals on the flowmeter.

Configuration

Selection guide SITRANS FUE380, type-approved flowmeter

DN	Q_s (m^3/h)	Q_{max} (m^3/h) (105% of Q_s)	Q_p (m^3/h)	Q_i (m^3/h) (1:50 of Q_p)	Q_i (m^3/h) (1:100 of Q_p) EN 1434/MID	Cut-off (m^3/h) (95% of Q_i)	Cut-off (% of Q_{max})	Typical pulse value (l/pulse)
		105%		**50**	**100**	**95%**		
50	30	31.5	15	0.3	-	0.285	0.95	1
50	45	47.25	15	0.3	-	0.285	0.63	1
50	45	47.25	30	-	0.3	0.285	0.63	1
65	50	52.5	25	0.5	-	0.475	0.95	1
65	72	75.6	25	0.5	-	0.475	0.66	1
65	72	75.6	50	-	0.5	0.475	0.66	1
80	80	84	40	0.8	-	0.760	0.95	2.5
80	120	126	40	0.8	-	0.760	0.63	2.5
80	120	126	80	-	0.8	0.760	0.63	2.5
100	120	126	60	1.2	-	1.140	0.95	2.5
100	180	189	60	1.2	-	1.140	0.63	2.5
100	180	189	120	-	1.2	1.140	0.63	2.5
125	200	210	100	2.0	-	1.900	0.95	2.5
125	280	294	100	2.0	-	1.900	0.68	2.5
125	280	294	200	-	2.0	1.900	0.68	2.5
150	300	315	150	3.0	-	2.850	0.95	10
150	420	441	150	3.0	-	2.850	0.68	10
150	420	441	300	-	3.0	2.850	0.68	10
200	500	525	250	5.0	-	4.750	0.95	10
200	700	735	250	5.0	-	4.750	0.68	10
200	700	735	500	-	5.0	4.750	0.68	10
250	800	840	400	8.0	-	7.600	0.95	10
250	1120	1176	400	8.0	-	7.600	0.68	10
250	1120	1176	800	-	8.0	7.600	0.68	10
300	1120	1176	560	11.2	-	10.640	0.95	50

© Siemens 2020

Configuration (continued)

DN	Q_s (m^3/h)	Q_{max} (m^3/h) (105% of Q_s)	Q_p (m^3/h)	Q_i (m^3/h) (1:50 of Q_p)	Q_i (m^3/h) (1:100 of Q_p) EN 1434/MID	Cut-off (m^3/h) (95% of Q_i)	Cut-off (% of Q_{max})	Typical pulse value (l/pulse)
300	1560	1638	560	11.2	-	10.640	0.68	50
300	1560	1638	1120	-	11.2	10.640	0.68	50
350	1500	1575	750	15.0	-	14.250	0.95	50
350	2100	2205	750	15.0	-	14.250	0.68	50
350	2100	2205	1500	-	15.0	14.250	0.68	50
400	1900	1995	950	19.0	-	18.050	0.95	50
400	2660	2793	950	19.0	-	18.050	0.68	50
400	2660	2793	1900	-	19.0	18.050	0.68	50
500	2950	3097.5	1475	29.5	-	28.025	0.95	100
500	4130	4336.5	1475	29.5	-	28.025	0.68	100
500	4130	4336.5	2950	-	29.5	28.025	0.68	100
600	4300	4515	2150	43.0	-	40.850	0.95	100
600	6020	6321	2150	43.0	-	40.850	0.68	100
600	6020	6321	4300	-	43.0	40.850	0.68	100
700	5800	6090	2900	58.0	-	55.100	0.95	100
700	8120	8526	2900	58.0	-	55.100	0.68	100
700	8120	8526	5800	-	58.0	55.100	0.68	100
800	7600	7980	3800	76.0	-	72.200	0.95	100
800	10 640	11 172	3800	76.0	-	72.200	0.68	100
800	10 640	11 172	7600	-	76.0	72.200	0.68	100
900	10 000	10 500	5000	100.0	-	95.000	0.95	100
900	14 000	14 700	5000	100.0	-	95.000	0.68	100
900	14 000	14 700	10 000	-	100.0	95.000	0.68	100
1000	14 000	14 700	10 000	-	100.0	95.000	0.68	100
1200	14 000	14 700	10 000	-	200.0	190.000	1.36	100

Dynamic range Q_i:Q_p: better than 1:100 to OIML R 75 class 2 and MID EN 1434 class 2.

Q_i (Q_{min}) means the minimal and Q_p (Q_{nom}) the nominal flow rate according to the approval requirements.

Q_s is the highest operatable flow rate. The maximum flow rate (Q_{max}) is 105 % of Q_s. The low flow cut off is 95 % of Q_i.

Q_i, Q_p and Q_s are shown on the system nameplate of the FUE380.

In order to obtain best pulse output resolution in the range Q_{min} to Q_s of approx. 100 Hz at Q_s, two or three flow values for every dimension can be selected at ordering. Therefore the ordering data table also shows Q_p (Q_n). This flow rate is between Q_i (Q_{min}) and Q_s and indicates the normal or typical flow according to the approval requirements.

Note:

The minimum flow (Q_i) should be checked in the PIA-selector or product master data base (PMD).

To get optimal benefit of the pulses the pulse value and pulse length shall be selected as low as possible. The following calculation formula can be used for determining the shortest pulse value at a pulse length of 5 ms: L/pulse > Q_s (m^3/h) /360.
For example Q_s = 300 m^3/h; L/pulse > 300/360; L/pulse > 0.83; therefore the pulse value must be 1 l/pulse

© Siemens 2020

Technical specifications

Pipe design	2-path sensor with flanges and inline transducers wet-calibrated from factory
Nominal size welded version (DN 50 ... DN 80 in bronze)	DN 50, 65, 80, 100, 125, 150, 200, 250, 300, 350, 400, 500, 600, 700, 800, 900, 1000, 1200
Pressure rate	PN 16, PN 25, PN 40 EN 1092-1
	EN 1092-1 flanges: • type 01 (B): DN 100 to DN 125 • type 11 (B): DN 150 to DN 200 • type 11 (B) 'design': DN 50 to DN 80
Pipe material	• DN 100 … DN 1200: Carbon Steel EN 1.0345/P235 GH, painted in light-gray. • DN 50 … DN 80: Die-cast bronze G-CuSn10/W2.1050.01 (EN1982)
Transducer design	• DN 100 … DN 1200: Inline version and welded onto the pipe • DN 50 … DN 80: Screwed into the pipe
Transducer material	Stainless steel (AISI 316/1.4404)/ brass ($CuZn_{36}Pb_2As$)
Sensor operating conditions	
Ambient temperature	
• Operation	-10 … +60 °C (14 … 140 °F)(MID version: -10 … +55 °C (14 … 131 °F))
• Storage	-40 … +85 °C (-40 … +185 °F)
Measured media	Heating water, according to VDI-2035 (pH 8.2 - 10.5), industrial VdTÜV information sheet 1466 and AGFW information sheet FW 510.
Media/surface temperature	
• DN 100 … DN 1200	Remote: 2 … 200 °C (35.6 … 392 °F) MID: min. +15 °C/+59 °F
• DN 50 … DN 80	Remote: 2 … 150 °C (35.6 … 302 °F) MID: min. +15 °C/+59 °F
• DN 50 … DN 1200	Compact: 2 … 120 °C (35.6 … 248 °F) MID: min. +15 °C/+59 °F
Degree of protection	Sensor connection IP67/NEMA 4X/6
Electromagnetic compatibility	
• Emitted interference	To EN 55011/CISPR-11
• Noise immunity	To EN/IEC 61326-1 (Industry)
• MID	Environment class E2 and M1
Max. flow velocity at Q_s	DN 50 … DN 1200: 9 m/s (29.5 ft/s)
Transmitter	
The transmitter related to this system is the SITRANS FUS080.	
Technical specifications to the FUS080 see page 3/259.	
Sensor cable	
Transducer cable length	Pre-mounted with short coax-cables
Sensor lnk cable length (SSL)	5, 10, 20, 30 m (16.4, 32.8, 65.6, 98.4 ft)
Certificates and approvals	
Conformity certificate (CE)	The devices are supplied as standard with a Siemens Certificate of Conformity on DVD.
Material certificate	Material certificate according EN 10204-3.1 is optionally available.
Calibration report	A standard calibration report is shipped with every flowmeter.
	Extended accredited ISO/IEC 17025 calibration certificates optionally available
Approvals	• Approval standards: N 1434 and OIML R 75 Class 2 • Type approval: ID, MI-004, class 2 approval and certification (according to EN 434) • CPA/CMC (China)

The sensors are approved according to EU directive 2014/68/EU regarding fluid group 1, classified in category III. Design according to EN 13480 (PED Directive).

Type-dependent settings

Flow value	Predefined according to EN 1434/OIML R 75/MID
Approval	Country specific
Flow rate v_f	0.02 … 9 m/s (0.065 … 29.5 ft/s)
Output A	Preset: Forward pulses
Output B	Preset: Alarm
Pulse value A & B (depending on DN value)	Preset: See scheme – previous page
	Preset for SITRANS FUE950 or free selectable, depending on flow rate (Q_s)
Pulse width	Preset: 5 ms
Flow unit setup	Preset: m^3/h
Volume unit setup	Preset: m^3

Flowmeter Calibration and traceability

To ensure continuous accurate measurement, flowmeters must be calibrated. The calibration is conducted at Siemens flow facilities with traceable instruments referring directly to the physical unit of measurement according to the International System of Units (SI).

Therefore, the calibration certificate ensures recognition of the test results worldwide, including the US (NIST traceability). Siemens offers accredited calibrations assured to ISO 7025 in the flow range from 0.0001 m^3/h to 10 000 m^3/h. Siemens Flow Instruments accredited laboratories are recognized by ILAC MRA (International Laboratory Accreditation Corporation - Mutual Recognition Arrangement) ensuring international traceability and recognition of the test results worldwide.

A standard calibration certificate with Q_n as selected flow is shipped with each SITRANS FUE380. This production calibration protocol consists of 2 x 3 points at Q_i, 10% Q_p and Q_p (max. 4 200 m^3/h).

Typical accuracy SITRANS FUE380:

± (0.5 + 0.02 Q_p/Q) [%]
Q_p according to EN 1434/OIML requirements.

Example: DN 100, Q_p = 60 m^3/h at Q = 1.2 m^3/h:
Accuracy at 1.2 m^3/h = typical 1.5 %

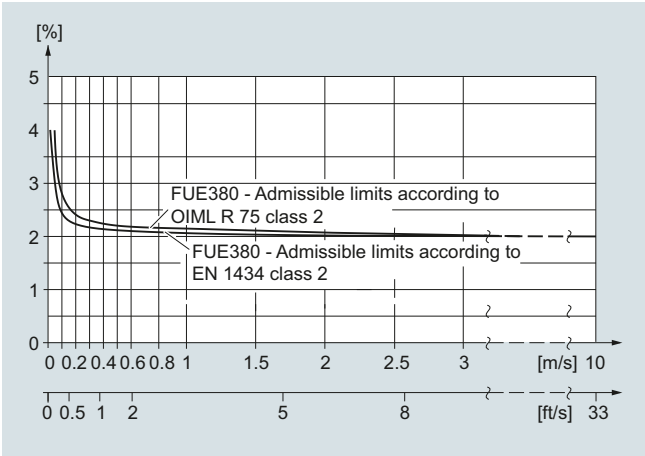

SITRANS FUE380 fulfils the requirements
E_f = ± (2 + 0.02 Q_p/Q_i) max. ± 5 %, according to EN 1434 and OIML R 75, class 2 or MID requirements.

© Siemens 2020

Selection and ordering data

Article No.

Flowmeter SITRANS FUS380 (type-approved) ↗ **7ME3410-** Ord. Code

■ ■ ■ ■ **0** - ■ ■ ■ ■ ■ ■ ■

↗Click on the Article No. for the online configuration in the PIA Life Cycle Portal.

Diameter	Approval	Pressure rating	Flow setting [m³/h] Q_p (Q_n) is the normal flow according to the approval requirements. Q_p and Q_s is shown on the system label. Q_p (Q_n)	Q_s	
Pipe material: Die-cast bronze					
DN 50 (2")		PN 40	15	30	**1 B**
DN 50 (2")		PN 40	15	45	**1 C**
DN 50 (2")	EN 1434	PN 40	30	45	**1 D**
DN 65 (2½")		PN 40	25	50	**1 F**
DN 65 (2½")		PN 40	25	72	**1 G**
DN 65 (2½")	EN 1434	PN 40	50	72	**1 H**
DN 80 (3")		PN 40	40	80	**1 K**
DN 80 (3")		PN 40	40	120	**1 L**
DN 80 (3")	EN 1434	PN 40	80	120	**1 M**
Pipe material: Carbon steel					
DN 100 (4")		PN 16, PN 40	60	120	**1 P**
DN 100 (4")		PN 16, PN 40	60	180	**1 Q**
DN 100 (4")	EN 1434	PN 16, PN 40	120	180	**1 R**
DN 125 (5")		PN 16, PN 40	100	200	**1 T**
DN 125 (5")		PN 16, PN 40	100	280	**1 U**
DN 125 (5")	EN 1434	PN 16, PN 40	200	280	**1 V**
DN 150 (6")		PN 16, PN 40	150	300	**2 B**
DN 150 (6")		PN 16, PN 40	150	420	**2 C**
DN 150 (6")	EN 1434	PN 16, PN 40	300	420	**2 D**
DN 200 (8")		PN 16, PN 25, PN 40	250	500	**2 F**
DN 200 (8")		PN 16, PN 25, PN 40	250	700	**2 G**
DN 200 (8")	EN 1434	PN 16, PN 25, PN 40	500	700	**2 H**
DN 250 (10")		PN 16, PN 25, PN 40	400	800	**2 K**
DN 250 (10")		PN 16, PN 25, PN 40	400	1120	**2 L**
DN 250 (10")	EN 1434	PN 16, PN 25, PN 40	800	1120	**2 M**
DN 300 (12")		PN 16, PN 25	560	1120	**2 P**
DN 300 (12")		PN 16, PN 25	560	1560	**2 Q**
DN 300 (12")	EN 1434	PN 16, PN 25	1120	1560	**2 R**
DN 350 (14")		PN 16, PN 25	750	1500	**2 T**
DN 350 (14")		PN 16, PN 25	750	2100	**2 U**
DN 350 (14")	EN 1434	PN 16, PN 25	1500	2100	**2 V**
DN 400 (16")		PN 16, PN 25	950	1900	**3 B**
DN 400 (16")		PN 16, PN 25	950	2660	**3 C**
DN 400 (16")	EN 1434	PN 16, PN 25	1900	2660	**3 D**
DN 500 (20")		PN 16, PN 25	1475	2950	**3 K**
DN 500 (20")		PN 16, PN 25	1475	4130	**3 L**
DN 500 (20")	EN 1434	PN 16, PN 25	2950	4130	**3 M**
DN 600 (24")		PN 16, PN 25	2150	4300	**3 T**
DN 600 (24")		PN 16, PN 25	2150	6020	**3 U**
DN 600 (24")	EN 1434	PN 16, PN 25	4300	6020	**3 V**
DN 700 (28")		PN 16, PN 25	2900	5800	**4 F**
DN 700 (28")		PN 16, PN 25	2900	8120	**4 G**
DN 700 (28")	EN 1434	PN 16, PN 25	5800	8120	**4 H**
DN 800 (32")		PN 16, PN 25	3800	7600	**4 P**
DN 800 (32")		PN 16, PN 25	3800	10640	**4 Q**
DN 800 (32")	EN 1434	PN 16, PN 25	7600	10640	**4 R**

© Siemens 2020

SITRANS FUE380 flowmeter with CT approval

Selection and ordering data

Flowmeter SITRANS FUS380 (type-approved)					Article No. 7ME3410-	Ord. Code
					■■■■0-■■■■	■■■
Diameter	**Approval**	**Pressure rating**	**Flow setting [m³/h]** Q_p (Q_n)	Q_s		
Remote only						
DN 900 (36")		PN 16, PN 25	5000	10000	5 B	
DN 900 (36")		PN 16, PN 25	5000	14000	5 C	
DN 900 (36")	EN 1434	PN 16, PN 25	10000	14000	5 D	
DN 1000 (40")	EN 1434	PN 16, PN 25	10000	14000	5 M	
DN 1200 (48")	EN 1434	PN 16	10000	14000	5 V	
Flange norm and pressure rating						
System without sensor - only a transmitter						
EN 1092-1						
• PN 16 (DN 100 ... 1200)					C	
• PN 25 (DN 200 ... 1000)					D	
• PN 40 (DN 50 ... 250)					E	
Compact/remote connection						
Note: Sensor cable always firmly connected to connection box.						
Compact version, liquid max. 120 °C (248 °F)						
Remote version, liquid max. 150/200 °C (302/392 °F)					0	
Sensor link cable (SSL)						
• 5 m (16.4 ft)					2	
• 10 m (32.8 ft)					3	
• 20 m (65.6 ft)					4	
• 30 m (98.4 ft)					5	
Approvals/pulse output						
Without approval (neutral)					0	
With CT approval					1	
With CT approval MID004, authority seal					2	
Pulse output value setup						
To get optimal benefit of the pulses the pulse value and pulse length shall be selected as low as possible. The following calculation formula can be used for determining the shortest pulse value at a pulse length of 5 ms: L/pulse > Q_s (m³/h) /360. For example Q_s = 300 m³/h; L/pulse > 300/360; L/pulse > 0.83; therefore the pulse value must be 1 l/pulse						
Pulse value						
• 0.1 l/pulse					1	
• 1 l/pulse					2	
• 2.5 l/pulse					3	
• 10 l/pulse					4	
• 50 l/pulse					5	
• 100 l/pulse					6	
• 250 l/pulse					7	
• 1 m³/pulse					8	
• 0.25 l/pulse					9	N 0 A
• 0.5 l/pulse					9	N 0 B
• 5 l/pulse					9	N 0 C
• 25 l/pulse					9	N 0 D
• 500 l/pulse					9	N 0 E
• 2.5 m³/pulse					9	N 0 F
• 5 m³/pulse					9	N 0 G
• 10 m³/pulse					9	N 0 H
• 25 m³/pulse					9	N 0 J
• 50 m³/pulse					9	N 0 K
• 100 m³/pulse					9	N 0 L
• 250 m³/pulse					9	N 0 M
• 500 m³/pulse					9	N 0 N
• 1000 m³/pulse					9	N 0 P

© Siemens 2020

Selection and ordering data

	Article No.	
Flowmeter SITRANS FUS380 (type-approved)	**7ME3410-**	Ord. Code
	■■■■0 - ■■■■	■■■
Flowmeter SITRANS FUE080 power/analog output		
115 ... 230 V AC	B	
3.6 V Lithium battery, dual pack is included	D	
115 ... 230 V AC, backup 3.6 V DC Lithium battery, single pack is included	E	
3.6 V battery version (no battery pack included)	G	
Option with 4 ... 20 mA analog output module • 115 ... 230 V AC • 115 ... 230 V AC, backup 3.6 V DC, Lithium battery, single pack is included	 R U	
Note: Lithium batteries are subject to special transportation regulations according to United Nations "Regulation of Dangerous Goods, UN 3090 and UN 3091". Special transport documentation is required to observe these regulations. This may influence both transport time and costs.		
Country specific design		
Neutral, no approval mark	A	
China, PA 2008-T222 C	C	
Russia, EN 1434/OIML R75 M	M	
MID-Approval (MI004), Language on name plate English	R	
MID-Approval (MI004), Language on name plate German	S	
MID-Approval (MI004), Language on name plate Polish	T	
MID-Approval (MI004), Language on name plate French	U	
Pulse width setup		
Pulse width • 5 ms (standard) • 10 ms • 20 ms • 50 ms • 100 ms • 200 ms • 500 ms	 2 3 4 5 6 7 8	

Additional information Please add "**-Z**" to Article No. and specify Order code(s) and plain text.	Order code
Calibration/certificate FUS380	
Production calibration for DN 50 ... 1200 with Q_n as selected in diameter. Incl. Calibration protocol: 2 x 3 points, Q_i, 10 % Q_p and Q_p (max. 8000 m^3/h).	**Included**
Accredited Siemens ISO/IEC 17025 calibration for DN 50 ... 200 with Q_n as selected in diameter. Certificate: 2 x 5 points, Q_i, 5 %, 10 %, 50 % and 100 % of Q_p (max. 630 m^3/h).	**D20**
Accredited Siemens ISO/IEC 17025 calibration for DN 250 ... 600 with Q_n as selected in diameter. Certificate: 2 x 5 points, 5 %, 10 %, 50 % and 100 % of Q_p (max. 2800 m^3/h).	**D21**
Accredited Siemens ISO/IEC 17025 calibration, DN 500 ... 1200 with Q_n as selected in diameter. Certificate: 2 x 5 points, Q_i, 5 %, 10 %, 50 % and 100 % of Q_p (max. 8000 m^3/h).	**D22**
Output B as reverse flow pulses. No calibration/verification of this function.	**E21**
Material certificate	
EN 10204-3.1 (pipe material)	**C12**
Tag name plate	
Stainless steel TAG plate (1 x 24 x 80 mm), wire fixed. Font size depends on text length: 8 mm for 1 ... 10 characters, 4 mm for 11 ... 20 characters (specify in plain text).	**Y17**

Please use online Product selector to get latest updates:

http://www.pia-selector.automation.siemens.com

Flowmeter SITRANS FUE380 operating instructions, accessories and spare parts

Operating instructions

Description	Article No.
• English	**A5E00730100**
• German	**A5E00740611**

All literature is available to download for free, in a range of languages, at http://www.siemens.com/processinstrumentation/documentation

For accessories and spare parts see the section about FUS080/FUE080.

© Siemens 2020

Dimensional drawings

Flowmeter SITRANS FUS380 and FUE380

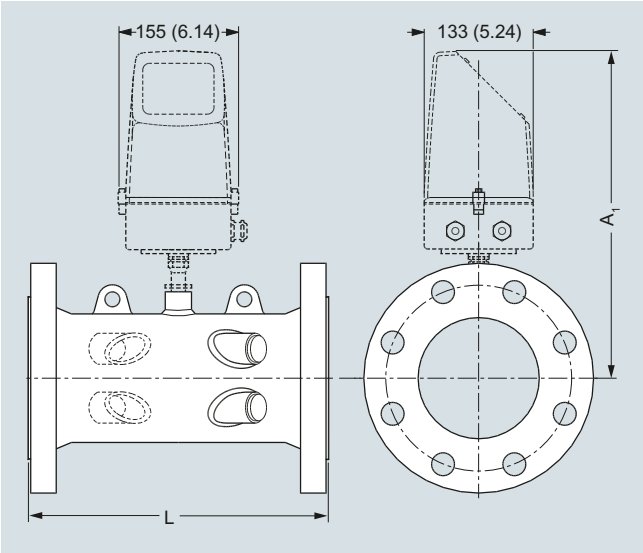

Transmitter IP67/NEMA 4X/6, wall mounting

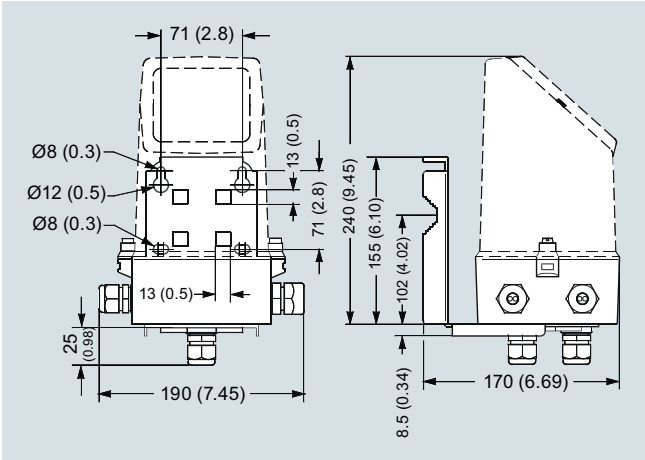

Dimensions in mm (inch)

Sensor dimensions for FUS380 and FUE380

Size	PN 16		PN 25		PN 40			
	L	Weight	L	Weight	L	Weight	A1	Lift hug
DN	mm	kg	mm	kg	mm	kg	mm	
50	-	-	-	-	300 +0/-2	10	350	No
65	-	-	-	-	300 +0/-2	15	363	No
80	-	-	-	-	350 +0/-2	18	370	No
100	350 +0/-2	15	-	-	350 +0/-2	18	372	No
125	350 +0/-2	18	-	-	350 +0/-2	24	385	No
150	500 +0/-3	28	-	-	500 +0/-3	34	399	No
200	500 +0/-3	38	500 +0/-3	47	500 +0/-3	55	425	Yes
250	600 +0/-3	60	600 +0/-3	76	600 +0/-3	91	452	Yes
300	500 +0/-3	66	500 +0/-3	81	-	-	478	Yes
350	550 +0/-3	94	550 +0/-3	121	-	-	495	Yes
400	600 +0/-3	124	600 +0/-3	153	-	-	520	Yes
500	625 +0/-3	194	625 +0/-3	231	-	-	570	Yes
600	750 +0/-3	303	750 +0/-3	365	-	-	622	Yes
700	875 +0/-3	361	875 +0/-3	553	-	-	673	Yes
800	1000 +0/-3	494	1000 +0/-3	770	-	-	724	Yes
900	1230 +0/-6	535	1300 +0/-6	835	-	-	775	Yes
1000	1300 +0/-6	594	1370 +0/-6	1000	-	-	826	Yes
1200	1360 +0/-6	732	-	-	-	-	928	Yes

Notes:

- Weight for transmitter/electronics 1.5 kg (compact version) or approximately 3 kg (remote version including 10 m cable set)
- Means not available
- All weights are **approximate**
- For flange values - see norm EN 1092-1

© Siemens 2020

Dimensional drawings (continued)

Size	**PN 16**		**PN 25**		**PN 40**			
	L	**Weight**	**L**	**Weight**	**L**	**Weight**	**A1**	**Lift hug**
inch	inch	lb	inch	lb	inch	lb	inch	
2	-	-	-	-	11.81 +0/-0.08	22	13.78	No
2½	-	-	-	-	11.81 +0/-0.08	33	14.30	No
3	-	-	-	-	13.78 +0/-0.08	40	14.57	No
4	13.78 +0/-0.08	33	-	-	13.78 +0/-0.08	40	14.65	No
5	13.78 +0/-0.08	40	-	-	13.78 +0/-0.08	53	15.16	No
6	19.68 +0/-0.12	62	-	-	19.68 +0/-0.12	75	15.71	No
8	19.68 +0/-0.12	84	19.68 +0/-0.12	104	19.68 +0/-0.12	121	16.74	Yes
10	23.62 +0/-0.12	132	23.62 +0/-0.12	168	23.62 +0/-0.12	201	17.80	Yes
12	19.68 +0/-0.12	146	19.68 +0/-0.12	179	-	-	18.82	Yes
14	21.65 +0/-0.12	207	21.65 +0/-0.12	267	-	-	19.49	Yes
16	23.62 +0/-0.12	273	23.62 +0/-0.12	337	-	-	20.48	Yes
20	24.61 +0/-0.12	428	24.61 +0/-0.12	509	-	-	22.45	Yes
24	29.53 +0/-0.12	668	29.53 +0/-0.12	805	-	-	24.49	Yes
28	34.45 +0/-0.12	796	34.45 +0/-0.12	1246	-	-	26.50	Yes
32	39.37 +0/-0.12	1089	39.37 +0/-0.12	1698	-	-	28.51	Yes
36	48.43 +0/-0.24	1179	51.18 +0/-0.24	1841	-	-	30.52	Yes
40	51.18 +0/-0.24	1310	53.94 +0/-0.24	2205	-	-	32.52	Yes
48	53.34 +0/-0.24	1614	-	-	-	-	36.54	Yes

Notes:

- Weight for transmitter/electronics 3.3 lb (compact version) or approximately 6.6 lb (remote version including 32.8 ft cable set)
- Means not available
- All weights are **approximate**
- For flange values - see norm EN 1092-1

© Siemens 2020

Circuit diagrams

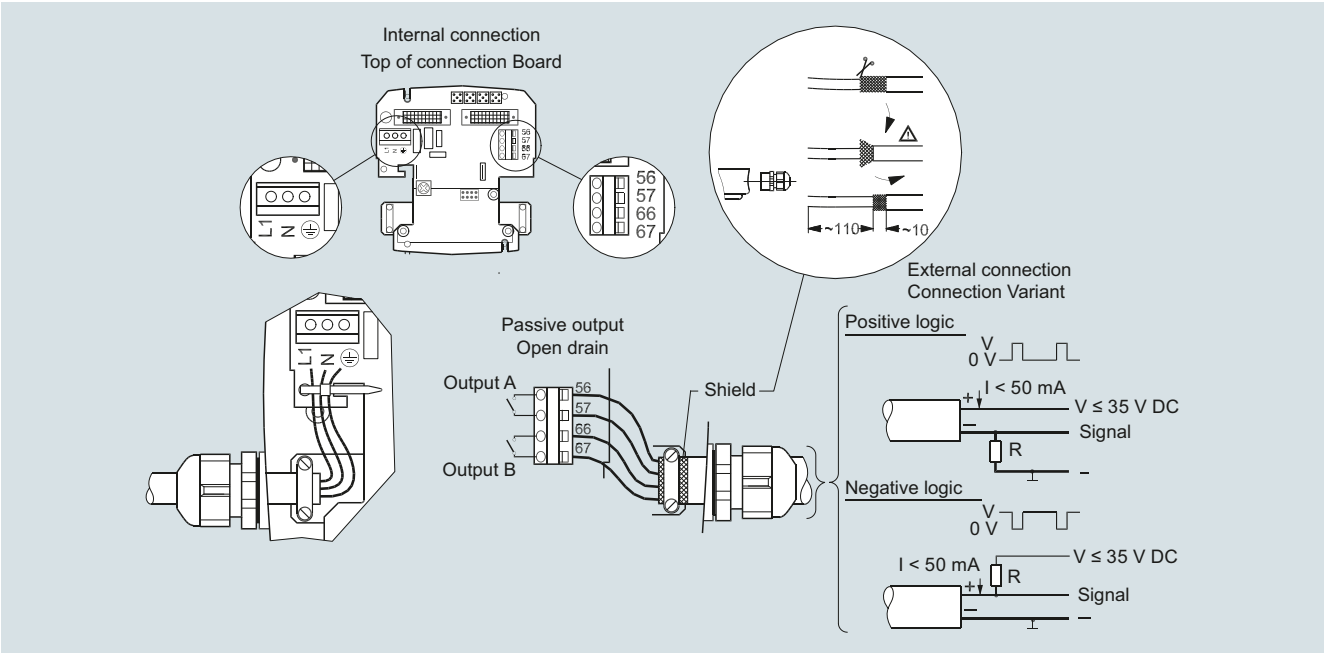

Electrical connection of transmitter SITRANS FUS380 and FUE380

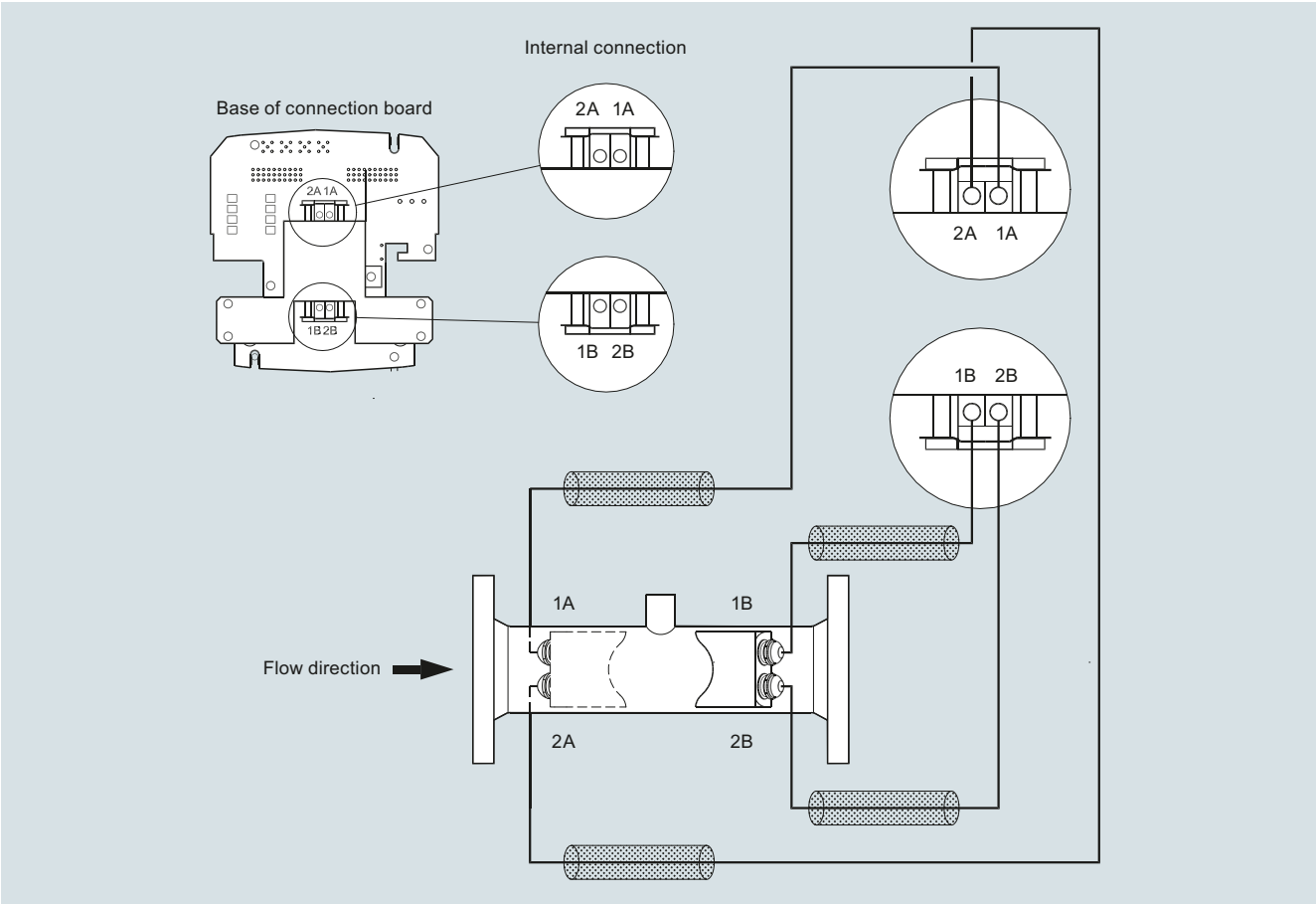

Electrical connection of sensor SITRANS FUS380 and FUE380

© Siemens 2020

Overview

SITRANS FUE950 is a universal thermal energy calculator, which meets the requirements EN 1434 and has the MID and PTB K7.2 approval for energy metering with the media water.

SITRANS FUE950 has been developed for the SITRANS FUS380/FUE380 and alternatively MAG 5000/6000 or FST020. SITRANS FUE950 is modular in construction and can by order be fitted with optional modules depending on the application. The FUE950 supports none of the SITRANS FX, FC products and only some of the FUS clamp-on products.

Benefits

Basic functions

- Prepared for heating, cooling measurement
- Approval for MID for heat metering and PTB K7.2 for cooling
- High-accuracy thermal energy metering, meets EN 1434 requirements
- Measured temperature range -20 … +190 °C (-4 … +374 °F)
- Instantaneous values for energy/volume flow
- Battery or mains powered
- Battery version with battery lifetime of typically up to 10 years
- Optical data interface
- Real date and time
- Auto-detection of 2-wire or 4-wire temperature sensors

Additional functions

- Individual tariff functions
- Advanced functions for cooling/heating applications or the combination
- Memory for 24 periods (months, weeks, days)
- Data logger function
- Expandable functionality with 2 optional plug and play add-on modules
- Communication over M-Bus, RS 485 or RS 232

Add-on modules

- Plug-in module with 2 extra pulse inputs
- Plug-in module with 2 pulse outputs
- Plug-in module with combination of input and output pulses
- Plug-in module for M-Bus communication
- Plug-in module for RS 232 or RS 485 communication
- Plug-in module with 2 passive current outputs (4 ... 20 mA)

Application

The SITRANS FUE950 is able to handle 3 kinds of applications, means energy calculation in:

- District heating applications
- Chilled water applications
- Combined cooling/heating applications

Energy metering in heating, hot water applications (code "A" and "B")

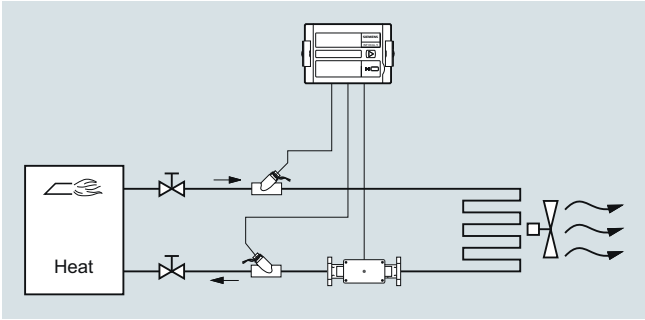

Energy metering in cooling, chilled water applications (code "C" and "D")

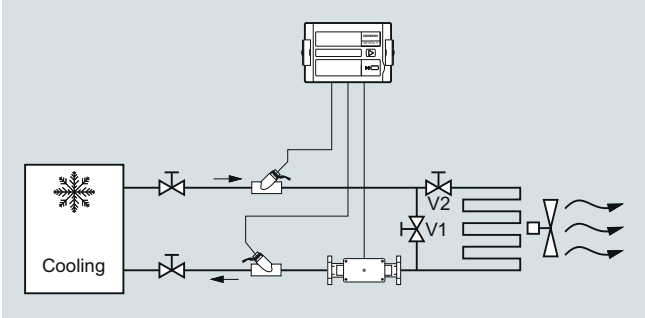

Energy metering in combined cooling/heating applications (code "E" and "F")

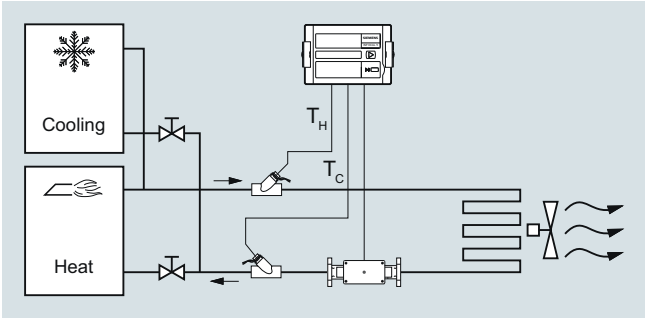

3

© Siemens 2020

Design

SITRANS FUE950 has an easy-read 8-digit LCD display with associated pictograms for the various functions. As the display has been made for several applications, some figures/symbols not used for normal district heating applications will be shown.

SITRANS FUE950 has a push button for simple operation and provides user-friendly control via the various display menu loops. The display will always be configured for the application chosen, and for the selected display settings.

The integrator has an IP54 plastic housing and is designed for wall or panel mounting. The housing comes with prepared rubber gaskets cable entries for fast and easy installation.

Operation menu loop structure

The FUE950 display has six menu loops and the menus are numbered in the display from 1 to 6. Some display menus consist of two values (to maximum seven) that are shown alternately at 4-second intervals.

The main menu loop no. 1 with the current data, e.g. for energy, volume, flow rate and temperature, is preprogrammed as default setting.

In the combined heating/cooling configuration the menu loop no. 5 (tariff menu loop) will be activated additionally.

Displays and output pulses

Units: MWh, GJ, Gcal, MBtu, m^3, gal, m^3/h, GPM, °C, °F and kW; all decimal points are statically (the unit "gal" is shown with factor x 100).

The display unit and the last fractional digit are typical used for the pulse outputs.

Function

Technical principle

Calculation of energy is based on the following formula:

Energy = Volume x (T_{Hot} - T_{Cold}) x K_{factor} (T_i)

Volume: Volume [m^3] of a given amount of volume pulses

T_{Hot}: Measured temperature in the hot line

T_{Cold}: Measured temperature in the cold line

K_{factor} (T_i): Thermal coefficient of media enthalpy and heat content

The energy calculation is made by a counter and depends on temperature difference, pulse input frequency and legal requirements.

The calculator always carries out at least one energy calculation every 2 seconds. If the connected flowmeter has not sent enough pulses the energy calculation and flow indication is also based on the 8 seconds value.

Data memory

The FUE950 has a history memory of 24 periods (months, weeks, days). The following values are stored monthly, weekly or daily in the EEPROM on the programmed day of 1…31 (via software tool).

- Date/Time
- Energy
- Tariff energy 1
- Tariff energy 2
- Tariff definition 1
- Tariff definition 2
- Pulse counter input 1
- Operation hours
- Volume
- Error day counter
- Maximum monthly flow rate
- Maximum monthly power
- Date of maximum monthly flow rate
- Date of maximum monthly power
- Pulse counter input 2

Data logger memory (LOG)

The LOG of the calculator is stored every 24 hours with all cumulative values in the EEPROM. The storage frequency can be selected from various storage intervals (5, 6, 10, 12, 15, 20, 30, 60 minutes or the default setting of 24 hours). The data which are stored in the LOG could be read out using a software tool and can be used for evaluations.

Extract of possible LOG settings

Storage interval	Values	Number of data records	Recording period
5 minutes	• Error status • Overload time temperature • Overload time flow rate • Forward temperature • Return temperature • Date and time • Energy • Tariff energy 1 • Tariff energy 2 • Tariff definition 1 • Tariff definition 2 • Volume • Error day counter	440	36.6 hours
15 minutes		440	110 hours
1 hour		440	18.3 days
24 hours (default setting)		440	440 days

Maximal Values

The integrator creates max. values for power and flow rate based on consumption time, which are stored in the EEPROM. The integration intervals are adjustable to 6, 15, 30 or 60 minutes and 24 h. Default setting is 60 minutes.

Tariff/Accounting date function

The calculator includes two independent memories in which the accumulated energy at two programmable tariff dates are stored.

- Last accounting date
- Last but one accounting date

Values stored

- Energy
- Volume
- Tariff counter 1
- Tariff counter 2
- Pulse counter 1
- Pulse counter 2
- Date

The integrator offers two optional tariff memories for monitoring plant load states. Here it concerns threshold value tariffs. Extensive tariff conditions make it possible to adapt the calculator individually to the required customer-specific applications.

Both tariffs are separately configurable and independent from each other. Energy or time can be measured alternatively per tariff register dependent on the tariff mode adjusted in each case.

With the "time triggered tariff function" the switch-on time and the switch-off time are adjustable independent from each other for each day of the week in steps of 15 minutes.

© Siemens 2020

Function (continued)

The following tariff limit types of the tariff are possible:
(This example applies to the display at 3 fractional digits after comma)

Type	Description	Limit	Limit resolution
dT	Temperature difference	1 … 190 °C	1 °C
-dT	Negative temperature difference	1 … 190 °C	1 °C
TR	Return temperature (low)	1 … 190 °C	1 °C
TV	Forward temperature (high)	1 … 190 °C	1 °C
P	Power	10 … 2500 kW	10 kW
Q	Flow	1 … 255 m^3/h	1 m^3/h
FE	"Theoretically forward energy" with return temperature of 0 °C		
Z	"Time triggered" counting energy		
E	"External" counting energy		

Error handling and memory

Events such as changes and faults are stored in a non-volatile memory with a capacity of up to 127 entries. The following events are recorded:

- Checksum error
- Temperature measurement error
- Error hours
- Start and end of test mode

If SITRANS FUE950 records an error, this will be automatically indicated by a "alarm symbol" on the display.

To protect the reading data, all the relevant data are saved in a non-volatile memory (EEPROM). This memory saves the measured values, device parameters and types of error at regular intervals.

The following events are recorded:

- Temperature sensor error
- Swapped hot and cold temperature sensors
- Battery low warning
- Power supply failure
- Optical communication warning
- RAM checksum error

Outputs/Inputs/Communication

Communication interfaces:

SITRANS FUE950 is fitted with an optical infra-red send/receive port in accordance with EN 1434/IEC 61107, protocol standard, EN 1434/EN 60870-3 (M-Bus protocol).

A specific optical head with a permanent magnet (IrDA-adapter) in accordance with EN 1434 can be used for readout data or communication with the parameterization software.

2 ports for optionally plug-in modules

The calculator features 2 ports for the plug-in modules.

One slot is for the function modules and the other for the communication modules.

Communication modules

The following communication modules are available as options: RS 232 module, RS 485 module and M-Bus module. The RS 232 and RS 485 communication modules are serial interfaces and permit data exchange with the calculator. For this purpose a special data cable is necessary.

The M-Bus module is a serial interface for communication with external devices (M-Bus Master/Centre). According to the M-Bus structure a number of calculators can be connected to a control centre.

Pulse input module

Two pulse inputs are available. The pulse value and the unit is configurable for energy, water, gas or electrical meter by parameterization software. Data are separate cumulated in different registers and are also stored on the two accounting day's (Tariff registers).

Combined pulse Input/Output module

Two pulse inputs combined with one pulse output are available on one module. The pulse inputs are configurable with value and the unit by parameterization software.

The pulse output is also programmable using the parameterization software.

Pulse output

The calculator provides levels for two optional external pulse outputs, which can be freely programmed using the parameterization software tool.

Default setting is one pulse which occurs per change in the least significant digit in the display with the unit and resolution selected by the device ordering.

Possible pulse output values

- Energy (default setting)
- Volume (default setting)
- Tariff energy 1
- Tariff energy 2
- Tariff condition 1, limit switch
- Tariff condition 2, limit switch
- Energy error
- Volume error
- Volume with specific resolution (0.1, 1.0, 10 or 100)
- Energy with specific resolution (0.1, 1.0, 10 or 100)

Combined current output module

Optional module with 2 passive 4 ... 20 mA outputs.

Possible output values:

- Power (default setting for output #1)
- Flow (default setting for output #2)
- Hot, cold or difference temperature

The settings can be configured by parameterization software. The current output module occupies both ports, means no other plug-in module will possible to plug in.

Module combinations

The calculator has a group of extension modules for communication and another group of extension modules for additional functionality. These modules are available first selected within the calculator, or for retrofitting in the field.

One single function module as well as one single communication module out of following modules is selectable.

Function modules:

- Pulse input module, 2 inputs
- Pulse output module, 2 outputs
- Combined pulse module 2 inputs, 1 output
- Combined current output module, 2 x passive 4 ... 20 mA (occupies both ports)

Communication modules:

- M-Bus (M-Bus protocol according EN 1434-3)
- RS 232 (M-Bus protocol according EN 1434-3)
- RS 485 (M-Bus protocol according EN 1434-3)

© Siemens 2020

SITRANS FUE950 energy calculator

Integration

SITRANS FUE950 is a multi-purpose energy calculator for media water which meets the requirements of EN 1434. Further, the energy calculator has been specially developed to process volume pulses from SITRANS FUS380/FUE380 or alternatively MAG 5000/6000 or FST020 transmitter.

Technical specifications

Approval	MID approved in accordance with energy meter EN 1434 and PTB K7.2 (German national cooling approval)
Approved temperature range	
• Heating	0 … 180 °C (32 … 356 °F)
• Cooling	0 … 105 °C (32 … 221 °F)
Absolute temperature range	-20 … +190 °C (-4 … -374 °F)
Differential temperature	
• Heating	3 … 177 K (starting at 0.1 K)
• Cooling	3 … 102 K
Measuring accuracy	Meets requirements of EN 1434 Typically max. ± (0.5 + 3 K/Δθ) [%] of measured value
Measuring rates	
• Battery type D-cell	Volume: 1 s, temperature: 4 s
• Mains versions	Volume: 1/8 s, temperature: 2 s
Flow range	Depends on pulse input value (IN0), see "Selection and Ordering data"
Power range value	Depends on pulse input value as follows:
Pulste input value (I/P or gal/P)	Max power [kW]
1	15000
2.5	15000
5	15000
10	150000
25	150000
50	150000
100	1500000
250 *)	1500000
500 *)	1500000
1000 *)	15000000

*) not available for gal/pulse

Typical accuracy of FUE950

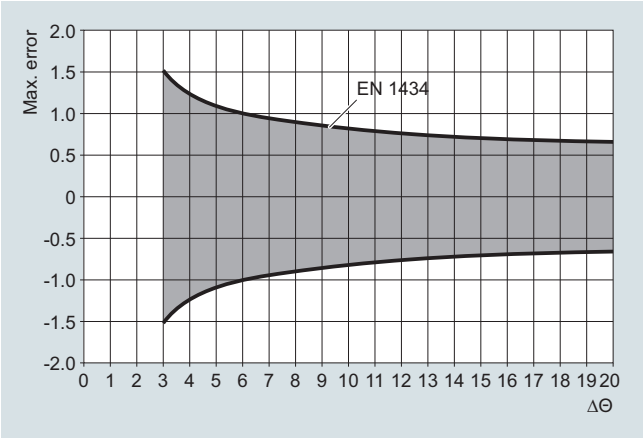

User interface (always included)	
Display	8-digit LCD display with associated pictograms/symbols
Units	MWh, GJ, Gcal, MBtu, m^3, m^3/h, GPM, gal, °C, °F, kW, MBtu/h (gal is shown with factor x 100)
Totalizer value range	99 999 999 or 9 999 999.9 (0 and 1 digit after comma). Display digits: Flow in 6 digits; Volume, power and energy in 8 digits
Values	Power, energy, volume, flow rate, temperatures
Push button	Single push button for the menu controlling
Optical interface IrDA interface	ZVEI optical interface with M-Bus protocol as per EN 1434, connection via separate IrDA-adapter baud rate: 300 or 2400
Rated operation conditions	
Enclosure	IP54 in accordance with IEC 529
Material	
• Housing	C Lexan 141R (or similar); colors: light gray (top part) and black (bottom part)
• Pipe/wall fitting	PA 6,6 GF25 (or similar)
• Other plastic parts	ABS Cycolac GPM500 (or similar)
• Gaskets	Neoprene and rubber cable bushings: EPDM 50
• Rubber cable bushings	EPDM 50
Temperature	
• Ambient	5 … 55 °C (41 … 131 °F)
• Storage	-25 … +70 °C (-13 … +158 °F) Relative ambient humidity < 93 %
Environment class	
• Mechanic class	M1/M2
• Electromagnetis class	E1/E2 (MID) or C (DIN EN 1434)
Temperature input (always included)	
Function	The temperature sensors must be connected to terminals 1-5 and 6-2 (T_H) and 3-7 and 8-4 (T_C) depending on cable type (2-wire or 4-wire).
Temperature range Absolute measuring range	-20 … 190 °C (-4 … 374 °F) for T_H and T_C
Temperature difference	Start 0.1 K, min. 3 K, max. 177 K
Measurement cut-off	0.125 K
Display resolution	T_H and T_C: 0.1 K ΔT: 0.1 K 16-bit digital resolution AD converter
Sensor types	Pt100 or Pt500 as 2-wire or 4-wire; Standard is Pt500. Sensor cable length: up to 10 m (according EN 1434 and MID-type approval).
Sensor connection	4-wire or 2-wire; auto detection of connection version

© Siemens 2020

Technical specifications (continued)

Flow input (IN0) (always included)	
Function	Used as standard for flow input of the external flowmeter. The input is marked as 10 (+ Flow Pulse), 11 (- Gnd) on the terminal strip. Note: The pulse input value selection must be the same as the pulse output setting of the flowmeter.
Pulse value	1 … 1000 l/pulse or 1 … 100 gal/pulse, selection by corresponding order code. Will be shown at the device label
Pulse frequency	≤ 100 Hz (200 Hz)
Pulse ON-time	≥ 3 ms
Pulse OFF-time	≥ 2 ms
Type	Active pulse input
Terminal voltage	3.6 V DC (supplied internally by FUE950)
Flowmeter installation place	The flowmeter installation place can be in the hot line or cold line ("forward or return pipe") selected by corresponding order code. The "installation place" will be shown at the device display and nameplate
Connected cable	Max. 10 m (shielded cables are highly recommended)
Ports for option modules	
Type	The calculator features 2 ports for optional plug-in modules.
Function modules (Port 1 or 2)	• Pulse input module, 2 inputs (In1, In2) • Pulse output module, 2 outputs (Out1, Out2) • Combination module of 2 inputs (In1, In2) and 1 output (Out1)
Current output module (Port 1)	2 passive 4 ... 20 mA (#1, #2) (occupies both port 1 and 2)
Communication modules (Port 1 or 2)	M-Bus, RS 232 or RS 485 (M-Bus protocol, according EN 1434-3)
Pulse output	
Function	The module contains connections for 2 pulse outputs, which can be programmed as desired using a software tool. The pulse outputs are marked as standard as O1, 'gnd' and O2, 'gnd' on the terminal strip and Out1 respectively Out2 in the display.
Type	Passive "open collector" pulse output, outputs potential isolated to each other
Pulse value	Last significant digits of the display (unit/pulse), selection by corresponding order code and setting can be read via display menu, settings changeable via software tool

Pulse output 1	
• Pulse frequency	≤ 4 Hz
• Pulse width	125 ms ± 10 %
• Pulse duration	125 ms ± 10 %
• Pulse break	≥ 125 ms -10 %
Pulse output 2	
• Pulse frequency	≤ 100 Hz, depending on the selected pulse length
• Ratio	Pulse duration/pulse break ~ 1:1
Pulse length	5, 10, 50, 100 ms (default: 5 ms)
External voltage supply	3 … 30 V DC
Current	≤ 20 mA with a residual voltage of ≤ 0.5 V
Possible pulse output selection	• Energy (default setting for 'Out1') • Volume (default setting for 'Out2') • Tariff energy 1 • Tariff energy 2 • Tariff condition 1 (limit switch) • Tariff condition 2 (limit switch) • Energy error • Volume error • Volume with specific display resolution (or with factor 0,1, 10 or 100 thereof) • Energy with specific display resolution (or factor 0.1 thereof)
Pulse input	
Function	Add-on module for two additional counters. The pulse input 1 is marked as I1, 'gnd' and the input 2 as I2, 'gnd' on the terminal strip and indicated in the display as separate registers IN1 and IN2 and can also be transferred via the communication modules.
Type	Passive "open collector" pulse inputs, outputs not potential isolated to each other, data are separate cumulated in different registers and are also stored on the two accounting day's.
Pulse value	Pulse value and the unit are configurable for energy, water, gas or electrical meter by a software tool Default: Pulse input 0.1 m3 or 1 gal (if unit 'gal' is ordered with the Z-option "L05")
Pulse frequency	≤ 8 Hz
Pulse length	≥ 10 ms
External voltage supply	3 V DC (supplied internally by FUE950)
Current	based on R_i = 2.2 MΩ
Cable length	< 10 m connection limit

© Siemens 2020

Technical specifications (continued)

Current output module	
Function	The module contains connections for 2 passive current outputs, which can be programmed individually using the software tool. The outputs are marked „#1“ and „#2“ with corresponding polarity „+“ and „-“ on the terminal strip. The module will be connected on port 1 only, but both ports are occupied by the module.
Terminal voltage	External supply: 10 … 30 V DC (passive output)
Signal range	4 … 20 mA; 4 mA = 0 value and 20 mA = default maximum values (for #1: Power in kW and for #2: Flow with the max. values and selected unit). Defaults: For power it is the max. selectable value x 100 000 the last digit of display (e. g. 20 mA = 10 000.0 kW (1 digit res.) or 100 000 kW (0 digit res). For flow it is the max. selectable value x 10 000 the last digit of display (e. g. 20 mA = 1 000.0 m^3/h (1 digit res.) or 10 000 m^3/h (0 digit res.).
Load	Max. 800 Ω
Upper limit	Up to 20.5 mA (exceed causes the error current value)
Signal on alarm	Errors are indicated with 3.5 mA or 22.6 mA (programmable, default: 3.5 mA)
Output values	Power, flow, temperature (configuring via software tool; default: for #1: Power and for #2: Flow)
M-Bus output	
Type	The optional M-Bus plug-in module is a serial interface for communication with external devices (M-Bus Repeater)
Protocol	M-Bus according EN 1434-3
Connection	The connection is not polarity-conscious and is electrically isolated, connection of 2 x max. 2.5 mm^2 wires, 300 or 2400 baud (auto baud detection), current drawn: one M-Bus load. M-Bus address: Each port has its own primary M-Bus address (Prim1 = the last two digits of the serial number; Prim2 = 0). The secondary address is unique for each calculator and is factory-set to equal the serial number.
RS 232 output	
Type	The optional module RS 232 is a serial interface for data transmission with external devices, e.g. PC; baud rate: 300 or 2400. The module contains a 3-pole terminal strip with terminals marked 62 (TX), 63 (RX) and 64 (GND). For this purpose a special data cable is necessary.
Protocol	M-Bus according EN 1434-3
Connection	The module contains a 3-pole terminal strip with terminals marked 62, 63, 64 (max. 2.5 mm^2); Connected cable length: max 10 m; For communication with a PC a special adapter cable is required (order no. A5E02611774).

RS 485 output	
Function	The optional RS 485 module is a serial interface for data transmission with external devices, e.g. PC; baud rate: 2400. The module contains a 4-pole terminal strip with terminals marked D+, D-, Vcc and GND.
Protocol	M-Bus protocol according EN 1434-3
Connection	Terminals D+ and D-; electrically isolated; 2400 baud only. An external supply of 12 V DC ± 5 V (<5 W) is needed for the module (terminals Vcc and GND). The module terminals are max. for 2.5 mm^2 wires. Connected cable length: max. 10 m
Power consumption	
230 V and 24 V versions	Typical current appr. 0.15 VA
3.6 V D-cell battery	Typical battery lifetime 10 years under normal conditions (no add-on modules, max. 40 °C ambient temperature)
Supply data	Internal voltage 3.6 V by the battery or plug-in power supply module
Battery, 3.6 V type (option)	3.6 V lithium D-cell, battery lifetime typically 16 years with independently powered flowmeter
230 V AC module (option)	Plug-in module for 230 V AC (195 ... 253 V AC), 50/60 Hz (incl. battery backup)
24 V AC module (option)	Plug-in module for 24 V AC (12 ... 30 V AC) (incl. battery backup)
Battery backup (option)	Only with mains supply modules by internal 3.0 V lithium battery (type CR 2032) Displayed values, date and time are still updated, but the measuring functions have stopped, including the flow rate measurement. Communication via optional modules M-Bus, RS 485, RS 232 or optical interface is maintained, affecting the backup battery lifetime.

Accessories/Software

The parameterization software based on the M-Bus is a convenient tool for handling the calculator. It runs on Windows and is used for configuration of the calculator functionality, reading out different memories, printing out calculator logs. For further details please contact your local Siemens representative.

A specific optical head with a permanent magnet in (IrDA adapter with bluetooth) accordance with EN 1434 can be used for programming/altering programming of readout data, configuration data, etc. The reader head can also be used to change measuring data.

© Siemens 2020

Selection and ordering data

	Article No.
Energy calculator SITRANS FUE950, MID or PTB K7.2 custody transfer approved ↗	**7ME3480-** ■■■■■ - ■■■■

↗ Click on the Article No. for the online configuration in the PIA Life Cycle Portal.

Flow input setting (IN0)

The pulse input value selection must be the same as the pulse output setting of the selected flowmeter. To get optimal function and performance the pulse value must be selected as low as possible according to the maximum flow rate.
The following calculation formula can be used for determining the lowest pulse value at a pulse length of 5 ms: L/pulse > Q_{max} (m^3/h)/360.
For example Q_{max} = 300 m^3/h; L/pulse > 300/360; L/pulse > 0.83; therefore the pulse value must be 1 l/pulse.

Pulse input in l/pulse or in gal/pulse (with option L05)	Flow limit Q_{max} in m^3/h	Flow limit Q_{max} in GPM*) (with option L05)	Article No.
1	360	6000	**2 A**
2.5	900	15000	**2 B**
5	1800	30000	**2 C**
10	3600	60000	**3 A**
25	9000	150000	**3 B**
50	18000	300000	**3 C**
100	36000	600000	**4 A**
250	90000	-	**4 B**
500	180000	-	**4 C**
1000	360000	-	**5 A**

*) GPM = Gallons per minute

	Article No.
Calculator application/Flowmeter installation place	
For heating, flowmeter in return pipe (cold pipe), typical standard	**A**
For heating, flowmeter in forward pipe (hot pipe)	**B**
For cooling, media water, flowmeter in forward pipe (cold pipe)	**C**
For cooling, media water, flowmeter in return pipe (hot pipe)	**D**
For combined cooling/heating, flowmeter in forward pipe (hot pipe as heating) (MID conformity declaration for heating)	**E**
For combined cooling/heating, flowmeter in return pipe (cold pipe as heating) (MID conformity declaration for heating)	**F**
Temperature sensor type	
Pt500 setup, no sensor pair included (standard)	**0**
Pt500 setup and Pt500 sensor pair (6/140 mm), 4-wire with 5 m connection cable, 6 mm sensor diameter and 140 mm sensor length. MID approved DE-06-MI004-PTB011, PTB approved 22.77/09.01, incl. factory test report (mentioned approvals are only valid if temp. sensors are used with the applicable temperature sensor pockets)	**3**
Pt500 setup and Pt500 sensor pair (6/230 mm), 4-wire with 5 m connection cable, 6 mm sensor diameter and 230 mm sensor length. MID approved DE-06-MI004-PTB011, PTB approved 22.77/09.01, incl. factory test report (mentioned approvals are only valid if temp. sensors are used with the applicable temperature sensor pockets)	**4**
Pt100 setup, no sensor pair included	**5**
Pt 500 setup and PT500 sensor pair (6/50 mm), 2-wire type incl. 5 m cable, 6 mm sensor diameter and 50 mm length, with MID approval (only for use with the applicable temperature sensor pockets)	**6**
Pt 500 setup and PT500 sensor pair (6/50 mm), 2-wire type incl. 10 m cable, 6 mm sensor diameter and 50 mm length, with MID approval (only for use with the applicable temperature sensor pockets)	**7**

	Article No.
Energy calculator SITRANS FUE950, MID or PTB K7.2 custody transfer approved	**7ME3480-** ■■■■■ - ■■■■
Temperature sensor pocket sets	
for 6 mm sensor diameter	
No pockets (standard)	**0**
Brass pockets for 6 mm 2-wire sensors, length 82/92 mm, G½ inch, max. PN 16 (2 pcs.)	**2**
Stainless steel pocket, 120/135 mm length for 6 mm sensor diameter, max. PN 40 and max. 5 m/s (2 pcs. for 140 mm 4-wire sensors above)	**5**
Stainless steel pockets for 6 mm 2-wire sensors, length 117/127 mm, G½ inch, max. PN 25 (2 pcs.)	**6**
Stainless steel pocket, 210/225 mm length for 6 mm sensor diameter, max. PN 40 and max 5 m/s (2 pcs. for 230 mm 4-wire sensors above)	**7**
Stainless steel pockets for 6 mm 2-wire sensors, length 155/168 mm, G½ inch, max. PN 25 (2 pcs.)	**8**
Voltage supply	
Battery 3.6 V DC (Litium D-cell type) (standard)	**1**
Mains power module for 230 V AC supply (incl. back-up battery)	**2**
Mains power module for 24 V AC supply (incl. back-up battery)	**3**
No power supply module (power supply ordering separate)	**4**
Option modules	
No module (standard)	**A**
1 module (communication module)	
M-Bus module	**B**
RS 232 module (M-Bus protocol)	**C**
RS 485 module (M-Bus protocol)	**D**
1 module (function module)	
Pulse output, 2x output (Out1 "Energy" and Out2 "Volume")	**E**
Pulse input, 2x input (In1 and In2)	**F**
Pulse out-/input combination, 2x input and 1x output	**G**
Combination of 2 modules (communication and function module)	
M-Bus module and Pulse output, 2x output (Out1 "Energy" and Out2 "Volume")	**H**
M-Bus module and Pulse input, 2x input (In1 and In2)	**J**
M-Bus module and Pulse out/-input combination, 2x input and 1x output	**K**
RS 232 module (M-Bus) and Pulse output, 2x output (Out1 "Energy" and Out2 "Volume")	**L**
RS 232 module (M-Bus) and Pulse input, 2x input (In1 and In2)	**M**
RS 232 module (M-Bus) and Pulse out/-input combination, 2x input and 1x output	**N**
RS 485 module (M-Bus) and Pulse output, 2x output (Out1 "Energy" and Out2 "Volume")	**P**
RS 485 module (M-Bus) and Pulse input, 2x input (In1 and In2)	**Q**
RS 485 module (M-Bus) and Pulse out/-input combination, 2x input and 1x output	**R**
Combination current output module, 2x passive 4 ... 20 mA (Out 1 "Power", Out 2 "Flow") (occupies both module Ports 1 and 2)	**S**

© Siemens 2020

Selection and ordering data

	Article No.										
Energy calculator SITRANS FUE950, MID or PTB K7.2 custody transfer approved	**7ME3480-**	■	■	■	■	■	-	■	■	■	■
Display units and resolutions											
MWh & kW, m^3, m^3/h in 2 digit resolution; Temperature: no decimal figures										**C**	
MWh & kW, m^3, m^3/h in 1 digit resolution; Temperature: no decimal figures										**D**	
MWh & kW, m^3, m^3/h in 0 digit resolution; Temperature: no decimal figures										**E**	
GJ & kW, m^3, m^3/h in 2 digit resolution; Temperature: no decimal figures										**H**	
GJ & kW, m^3, m^3/h in 1 digit resolution; Temperature: no decimal figures										**J**	
GJ & kW, m^3, m^3/h in 0 digit resolution; Temperature: no decimal figures										**K**	
Gcal & kW, m^3, m^3/h in 2 digit resolution; Temperature: no decimal figures										**M**	
Gcal & kW, m^3, m^3/h in 1 digit resolution; Temperature: no decimal figures										**N**	
Gcal & kW, m^3, m^3/h in 0 digit resolution; Temperature: no decimal figures										**P**	
MBTU & MBTU/h, m^3, m^3/h in 2 digit resolution; Temperature: no decimal figures										**Q**	
MBTU & MBTU/h, m^3, m^3/h in 1 digit resolution; Temperature: no decimal figures										**R**	
MBTU & MBTU/h, m^3, m^3/h in 0 digit resolution; Temperature: no decimal figures										**S**	
Verification/Approval											
Without type approval mark, neutral label (standard)											**0**
With MID type approval mark (only for heating combinations, selection "A, B, E and F")											**1**
With MID approval mark and first MID verfication (only for heating, selection A, B, E and F")											**2**
Cooling approval mark, German national cooling approval according PTB-TR-K7.2 (only for cooling and media water, selection "C and D")											**7**
Cooling approval mark, German national cooling approval according PTB-TR-K7.2 and first verification (only for cooling and media water, selection "C and D")											**8**

Further designs	Order code
Please add "**-Z**" to Article No. and specify Order code	
Certificate	
Including factory test report (certificate) of FUE950	**Always included**
Cooling, setup for non water	
Water/glycol setting for media type "Tyfocor LS (R)" (only with neutral label, no verification and approval)	**C02**
Optional settings/programming	
Tariff function settings (specify in clear text, up to max. 20 characters)	**D02**
Pulse output setting of option module (specify in clear text, up to max. 20 characters)	**D06**
Pulse input setting of option module (specify in clear text, up to max. 20 characters)	**D08**
Pulse input setting of 4 ... 20 mA option module (please specify 20 mA related type and value in clear text, up to max. 20 characters)	**D10**
Special display units	
Flow in 'GPM' and Volume in 'gal' (x100) (digits/resolution as selected above, only with 0 digit resolution)	**L05**
Temperature in deg. F (digit resolution as selected above)	**L31**

Flowmeter SITRANS FUE950 operating instructions, accessories and spare parts

Operating instructions

	Article No.
• English	**A5E003424739**

This device is shipped with Safety Notes and a DVD containing further SITRANS F US literature.

All literature is available to download for free, in a range of languages, at
http://www.siemens.com/processinstrumentation/documentation

Accessories

Infrared optical head (Bluetooth type) for data acquisition & programming of FUE950	**A5E02611768**
Bracket for SITRANS FUE950 wall mounting (20 pcs.)	**A5E02611769**
Cable for data acquisition via RS 232 PC/D-sub 9F/3 wire	**A5E02611774**

Spare parts

Add-on modules for FUE950 (only for 7ME348 versions)	
Pulse input module (2 inputs)	**A5E03461432**
Pulse output module (2 outputs)	**A5E03461436**
Combined pulse in-/output module (2 inputs and 1 output)	**A5E03461437**
RS232 module (M-Bus protocol)	**A5E03461459**
RS485 module (M-Bus protocol)	**A5E03461512**
M-Bus output module	**A5E03461516**
Combined current output module, 2 x passive 4 ... 20 mA	**A5E03461583**
Connection set for option modules (types: Pulse, RS 232/RS 485, M-Bus, mA) (special connection cable with 2 plugs)	**A5E03461585**
Power supply for FUE950 (only for 7ME348 versions)	
3.6 V D-cell battery for SITRANS FUE950	**A5E03461708**
230 V AC supply module (incl. internal fuse T50 mA L 250 V and back-up battery) for SITRANS FUE950	**A5E03461717**
24 V AC supply module for SITRANS FUE950, incl. back-up battery	**A5E03461719**
Pocket for temperature sensors Pt500 (for related 4-wire Pt500 type only, 1 pc.)	
Stainless steel pocket (1 pc.), 135 mm length for 6 mm sensor diameter, max. PN 40 and max. 5 m/s (recommended for 140 mm sensor length).	**A5E03462868**
Stainless steel pocket (1 pc.), 225 mm length for 6 mm sensor diameter, max. PN 40 and max. 5 m/s (recommended for 230 mm sensor length).	**A5E03462870**
Pt500 4-wire temperature sensor pair (as spare part), with MID MI004 and PTB K7.2 approvals and verification (for related 4-wire sensor pocket types only)	
Pt500 sensor pair (6/140 mm), 4-wire with 5 m connection cable, 6 mm sensor diameter and 140 mm sensor length. MID approved DE-06-MI004-PTB011, PTB approved 22.77/09.01 (mentioned approvals are only valid if temp. sensors are used with the applicable temperature sensor pockets).	**A5E03462872**
PT500 sensor pair (6/230 mm), 4-wire with 5 m connection cable, 6 mm sensor diameter and 230 mm sensor length. MID approved DE-06-MI004-PTB011, PTB approved 22.77/09.01 (mentioned approvals are only valid if temp. sensors are used with the applicable temperature sensor pockets).	**A5E03462878**
FUE950 enclosure (only for 7ME348 versions)	
Bottom part of FUE950 enclosure (1 pc.)	**A5E03461508**
Snap fit for FUE950 enclosure (1 pc.)	**A5E03461731**

© Siemens 2020

Dimensional drawings (continued)

Pocket for Pt500 temperature sensors (for corresponding 2-wire Pt500 types only; 1 pc.)	
Brass pocket 6 mm, G½B x 40 mm (PN 16), 1 pc.	**A5E02611778**
Brass pocket 6 mm, G½B x 85 mm (PN 16), 1 pc.	**A5E02611779**
Brass pocket 6 mm, G½B x 120 mm (PN 16), 1 pc.	**A5E02611780**
Stainless steel 6 mm, G½B x 85 mm (PN 25), 1 pc.	**A5E02611781**
Stainless steel 6 mm, G½B x 120 mm (PN 25), 1 pc.	**A5E02611783**
Stainless steel 6 mm, G½B x 155 mm (PN 25), 1 pc.	**A5E02611792**
Stainless steel 6 mm, G½B x 210 mm (PN 25), 1 pc.	**A5E02611793**
Pt500 temperature sensor pair, 2-wire cable, 6 mm sensor diameter, with MID/EN-approval (for corresponding 2-wire sensor pocket types only)	
Cable length:	
2 m	**A5E02611794**
3 m	**A5E02611795**
5 m	**A5E02611796**
10 m	**A5E02611798**

Dimensional drawings

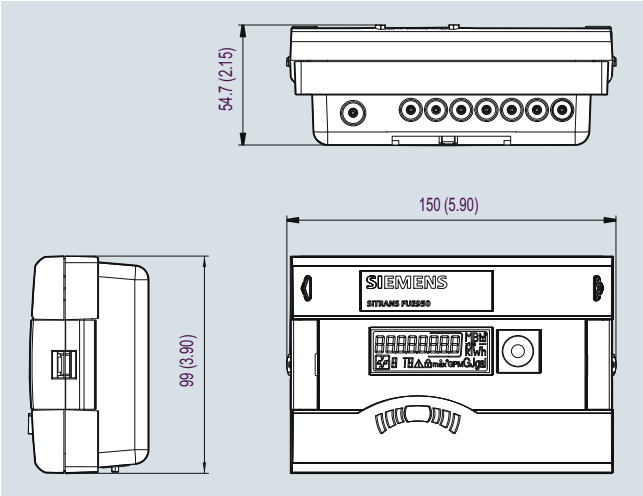

SITRANS FUE950, dimensions in mm (inch)

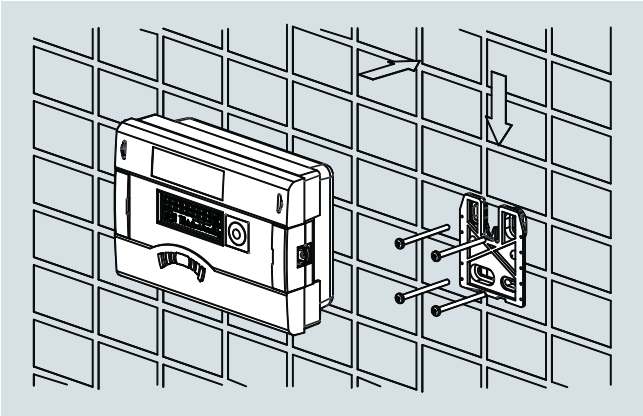

Wall mounting

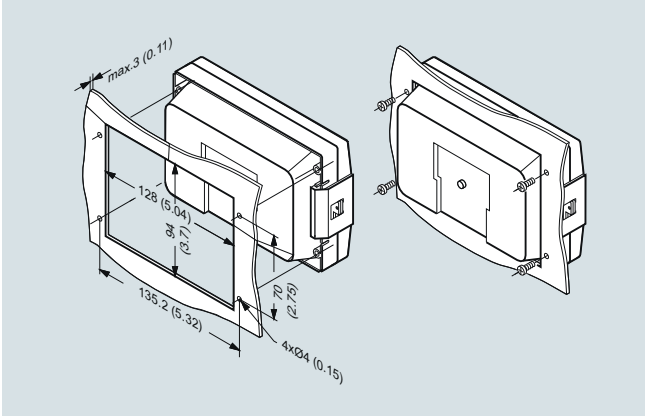

Panel mounting, dimensions in mm (inch)

Circuit diagrams

Electrical connection for SITRANS FUS380/FUE380/FUE950 and MAG 5000/6000/FUE950

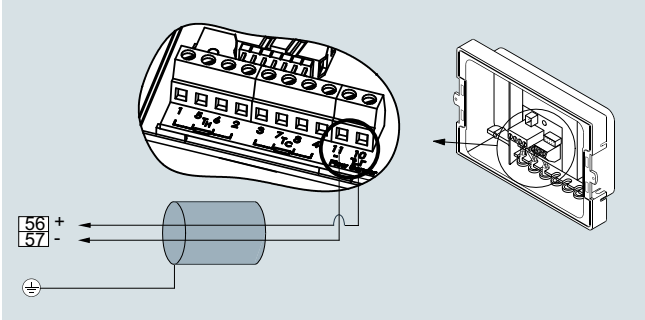

The diagram shows the connection between SITRANS FUE950 (terminals 10 and 11) and FUS380/FUE380 and MAG 5000/6000 (terminals 56 and 57). Temperature sensors must be connected to terminals 5 (1) and 6 (2) (T_H) and 7 (3) and 8 (4) (T_C).

Note:
The right flowmeter pulse output value must be equal to the FUE950 pulse input value and must be checked via the user menu of the transmitter MAG 5000/6000 or nameplate of FUE380 or FUS380.

© Siemens 2020

Application

The temperature sensor set is designed for use with the Siemens energy calculator type SITRANS FUE950 for measurement of the energy consumption in a district heating or cooling net.

Temperature sensors are one of the integral components of every thermal energy meter in heating or cooling applications. They are used for determining temperature changes in fluids due to energy taken from or supplied to the loop. The temperature is thus measured by mounting temperature sensors upstream and downstream from the point where the exchange in the thermal energy of the system is.

To ensure an accurate measurement of the temperature difference according to MID (EN 1434) or PTB K7.2 the sensors are delivered as matched pairs.

By selection with the corresponding order code the Pt500 sensor pair sets can be delivered with heating approval or with approvals for combined heating/cooling applications.

Technical specifications

Temperature sensor pairs

2-wire Pt500

Pt500 2-wire temperature sensor pair (EN 1434)	
Measuring insert	Pt500 temperature sensor, EN 60751, tolerance class B, 2-wire
Pairing	Paired to EN 1434 (10 … 130 °C/14 … 266 °F)
Media temperature	0 … 150 °C (32 … 302 °F)
Response time $T_{0.5}$	See sensor pocket specifications
Medium	Typically heating water
Pressure rating	See sensor pocket specifications
Protection	IP65
Pipe material	AISI 304 Ti/1.4303
Dimension	∅ 6 mm
Sensor tube length	50 m
Cable length	Up to 10 m (32.8 ft), fixed connected silicon cable, 2 connection wire terminals, terminal sleeves to DIN 46228

4-wire Pt500

Pt500 4-wire temperature sensor pair (with MID and PTB K7.2 approval)	
Measuring insert	Pt500 temperature sensor, EN 60751, tolerance class to ISO 751 Class B; 4-wire
Pairing	Matched paired according to EN 1434 at 10, 75 and 140 °C (50, 167 and 284 °F)
Type approval	MID (DE-06-MI004-PTB011) and PTB K7.2 (PTB 22.77/09.01). Only to be mounted with related sensor pockets according to the type approvals.
Media temperature	0...150 °C (32 ... 302 °F)
Permissible temp. pair range for ΔT	
• Heating	3 … 150 K
• Cooling	3 … 85 K
Medium	Approved for heating/cooling water
Protection	IP65
Environment	
• Meachnic class	M3
• Electromagnetic class	E1 (MID)
Pressure rating	See sensor pocket specifications
Material	
• Protective tube	Stainless steel AISI 304Ti/1.4571 (or similar), diameter of protective tube: 6 mm
• Connector cable	Silicon cable, 4 connection wire terminals, terminal sleeves to DIN 46228
Sensor tube length	140 or 230 mm (5.51 or 9.06 inch)
Cable length	5 m (16.4 ft), fixed connected

Sensor pockets

Stainless steel sensor pocket (for 4-wire Pt500 types only - standard)	
Media temperature	0 ... 150 °C (32 ... 302 °F)
Approval	Approved only together with 4-wire sensors
Medium	Approved for heating/cooling water; up to max. 5 m/s flow velocity
Pressure rating	PN 40
Length	Face-to-face length 120/135 and 210/225 mm (4.72"/5.23" and 8.27"/8.86")
External diameter	Protective tube 8/11 mm (0.32"/0.43")
Internal diameter	Protective tube 6 mm (0.24")
Pipe connection	Thread G 1/2" (with sealing screw for sensor)
Material	Protective tube AISI 316Ti/1.4571 (or similar)
Use	• Use with related 4-wire Pt500 sensors only (according type approval) • For flow velocities up to 5 m/s • Recommended to install with welded sleeve (according to EU standard)

Stainless steel sensor pocket (for 2-wire Pt500 types only, some only available as spare parts)					
Media temperature	0 ... 180 °C (32 ... 356 °F)				
Medium	Approved for heating water				
Response time $T_{0.5}$	Typically 13 s at 0.4 m/s without pasta				
	Typically 5 s at 0.4 m/s with pasta				
Pressure rating	PN 25				
Length	L1 (mm)	92	127	168	223
	L (mm)	82	117	155	210
Material	Stainless steel: AISI 316Ti/1.4571				
Use	For 2-wire Pt500 types only				

Brass sensor pocket (for 2-wire Pt500 types only, some only available as spare part)				
Media temperature	0 ... 150 °C (32 ... 302 °F)			
Medium	Approved for heating water			
Response time $T_{0.5}$	Typically 9 s at 0.4 m/s without pasta			
	Typically 5 s at 0.4 m/s with pasta			
Pressure rating	PN 16			
Length	L1 (mm)	47	92	127
	L (mm)	40	82	117
Material	Brass: $CuZn_{40}Pb_2$ (Ms58)			
Use	For 2-wire Pt500 types only			

© Siemens 2020

Dimensional drawings

Pt500 2-wire temperature sensor pair (EN 1434)

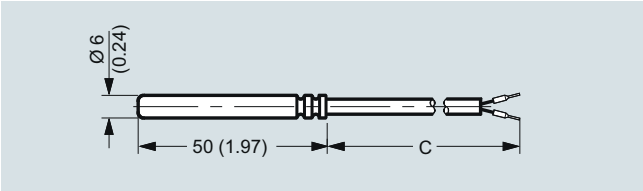

Pt 500 2-wire temperature sensor, dimensions in mm (inch)

Pt500 temperature sensor pair (EN 1434)	
Cable length	2, 3, 5 or 10 m ('C' at the dimensional drawing)

Pt500 4-wire temperature sensor pair (with MID and PTB K7.2 approval)

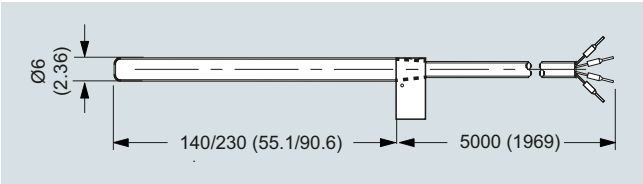

Pt500 4-wire temperature sensor, dimensions in mm (inch)

Stainless steel sensor pocket (for 2-wire Pt500 types only, some only available as spare parts)

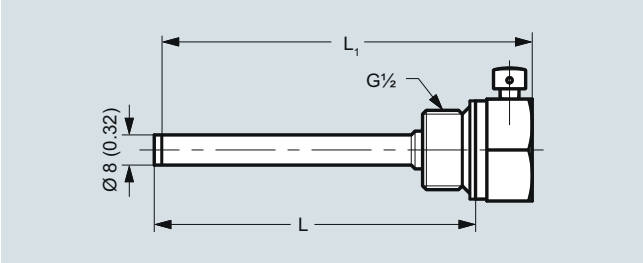

Sensor pocket (for 2-wire Pt500 types only), stainless steel, dimensions in mm (inch)

Stainless steel sensor pocket (for 2-wire Pt500 types only)					
Length	L1 (mm)	92	127	168	223
	L (mm)	82	117	155	210

Stainless steel sensor pocket (for 4-wire Pt500 types only - standard)

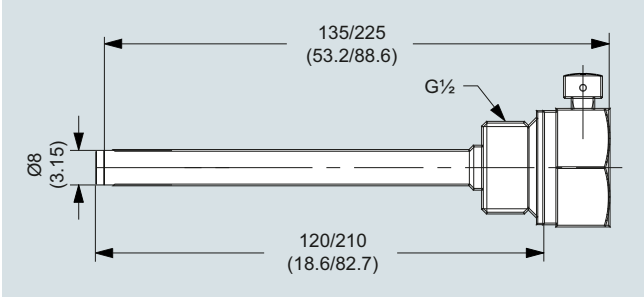

Stainless steel sensor pocket, dimensions in mm (inch)

Brass sensor pocket (for 2-wire Pt500 types only, some only available as spare part)

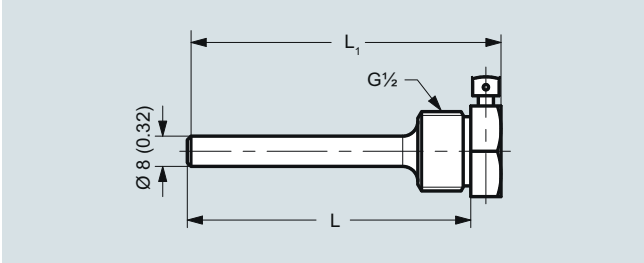

Sensor pocket, brass (for 2-wire Pt500 types only), dimensions in mm (inch)

Brass sensor pocket for 2-wire Pt500 types only)				
Length	L1 (mm)	47	92	127
	L (mm)	40	82	117

© Siemens 2020

SITRANS FS230 ultrasonic flowmeter

Overview

SITRANS FST030 with FSS200 and external DSL

SITRANS FS clamp-on ultrasonic flowmeters provide highly accurate measurement while minimizing installation time and maintenance expense.

Benefits

- Easy installation; no need to cut pipe or stop flow
- Minimal maintenance; external sensors do not require periodic cleaning
- No moving parts to foul or wear
- No pressure drop or energy loss
- Wide turn-down ratio
- Single or dual path with internal DSL, up to four paths with external DSL option

System performance	
Approvals	• ATEX Zone 2 (Sensors: Zone 0, 1, 2) • IIECEx Zone 2 (Sensors: Zone 0, 1, 2) • FM/FMc Class I Div. 2 (Sensors: Class I Div. 1)
Accuracy	± 0.5 ... 1 % for velocities above 0.3 m/s and >10 diameters straight run
Repeatability	± 0.25 % (based on ISO 11631)
Pipe size range	12.7 ... 10 m (0.5 ... 394")
Wall Thickness Range	0.64 ... 76.2 mm (0.025 ... 3.0")
Pipe material	Any sonically conductive material (steel, plastic, aluminum, glass, cement, ductile iron, copper)
Optional External DSL	Zone 0, 1, 2, Class 1 Div. 1 with transmitter in Zone 2 Class 1 Div 2 area

Optional External DSL

The optional external DSL allows for additional flexibility in application configurations. The External DSL benefits include:

- Measurement of 1-4 paths
- 2 x additional analog inputs, RTD or current
- Up to 150 m cable from DSL to transmitter (connection from zone 0,1 area to zone 2 area)

Applications

SITRANS FS230 standard functions are suitable for a wide variety of liquid applications, including the following:

- Water industry
  - Raw water
  - Potable water
  - Chemicals
- Wastewater industry
  - Raw sewage
  - Effluent
  - Sludges
  - Mixed liquor
  - Chemicals
- HVAC industry
  - Condensers
  - Hot and cold water systems
- Power industry
  - Nuclear
  - Fossil
  - Hydroelectric
- Processing industry
  - Process control
  - Batching
  - Rate indication
  - Volumetric and mass measurement

SITRANS FS230 hydrocarbon functions are ideal for applications carrying crude oil, refined petroleum or liquefied gas.

Standard volume (high end system)

- Standard (net) volume flow measurement
- Suitable for use in leak detection systems
- Mass flow output measurement
- Chemical and petrochemical processing
- Precise identification of interfaces on multi-liquid pipelines
- Product identification
- Standard density indication
- Applications with multiple liquids having a wide viscosity range
- Automatic gross volume compensation due to viscosity

SITRANS FS230 is ideal for most natural and process gas industry applications, including:

- Checkmetering
- Allocation
- Flow survey verification
- Lost and unaccounted for (LAUF) gas analysis
- Production
- Storage

The FS230 can be supplied with an external DSL option that allows for up to four paths with two additional analog inputs. The External DSL enclosure can be installed in a Zone 1 or Div 1 area near the sensors and measurement pipe using short sensor cables, with communication cable to transmitter up to 150 meters away.

© Siemens 2020

Overview (continued)

System information and selection guide

SITRANS FS clamp-on flowmeters	FS230 (Standard)	FS230 (Hydrocarbon)	FS230 (Gas)
Industry/Applications			
Water and aqueous solutions	X		
Utility district heating, cooling	X		
Chemical	X		
Hydrocarbons/petrochemical, multiple products or varying viscosity, liquefied gases, net and gross volume		X	
Hydrocarbons (single product with limited viscosity range) gross volume	X	X	
Very low flow (< 0.1 m/s) in small pipes	X		
High temperature applications < 232 °C (450 °F)	X	X	
Refrigeration liquids	X		
Food products	X		
Natural gas			X
Other gases i.e. propane, oxygen, argon etc.			X
Design			
Field clamp-on (non-intrusive)	X	X	X
Standard volume or mass flow; per API MPMS chapter 11.1		X	X
Interface detection		X	X
Standard density output		X	X
Temperature measurement	X	X	X
Analog input	X	X	X
Large graphical display	X	X	X
Configuration and diagnostic software PDM compatible	X	X	X
Number of acoustic paths and channels			
1-path	X	X	X
2-path	X	X	X
3-path (with external DSL)	X	X	X
4-path (with external DSL)	X	X	X
Size			
12.7 ... 10 000 mm (0.5" ... 394")	X		
38 ... 10 000 mm (1.5" ... 394")		X	
38 ... 1 200 mm (1.5" ... 48")			X
Approvals			
FM/FMc[1)]	X	X	X
ATEX	X	X	X
UL/ULc	X	X	X
IECEx	X	X	X

[1)] Nema 4X associated equipment in DIV 2 connected to DIV 1 sensors and DIV 1 external DSL.

© Siemens 2020

Function

Operating Principle

The SITRANS FS system is a transit-time ultrasonic meter that provides exceptional performance using a non-intrusive clamp-on approach. Ultrasonic sensors transmit and receive acoustic signals directly though the existing pipe wall, where the fluid refraction angle is governed by Snell's law of refraction.

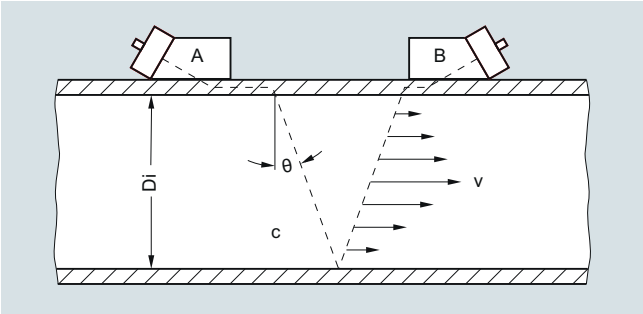

Clamp-on sensor mounted in a reflect configuration

The beam refraction angle is calculated as follows:

$\sin\theta = c / V_{\phi}$

c = Velocity of sound in fluid

V_{φ} = Phase velocity (a constant in the pipe wall)

The flowmeter automatically compensates for any change in fluid sound velocity (or beam angle) in response to variations in the average transit time between sensors A and B. By subtracting the computed fixed times (within the sensors and pipe wall) from the measured average transit time, the meter can then infer the required transit time in the fluid (T_{Fluid}).

The sound waves traveling in the same direction as the flow ($T_{A,B}$) arrive earlier than sound waves traveling against the direction of flow ($T_{B,A}$). This time difference (Δt) is used to compute the line integrated flow velocity (v) as shown in the equation below:

$v = V_{\varphi} / 2 \cdot \Delta t / T_{Fluid}$

Once the raw flow velocity is determined, the fluid Reynolds Number (Re) must be determined to properly correct for fully developed flow profile. This requires the entry of the fluid's kinematic viscosity (visc) as shown in the equations below, where Q represents the final flow profile compensated volumetric flow rate.

$Re = Di \cdot v / visc \cdot Q = K(Re) \cdot (\pi / 4 \cdot Di^2) \cdot v$

v = Flow velocity

$visc = \mu / \rho$ = (dynamic viscosity / density)

K(Re) = Reynolds flow profile compensation

In wetted type ultrasonic flowmeters the meter constants are configured prior to leaving the factory. As this is not possible with clamp-on meters, the settings must be made by the customer at the time of installation. These settings include pipe diameter, wall thickness, liquid viscosity, etc.

SITRANS clamp-on flowmeters that include temperature sensing can be configured to dynamically infer changes in fluid viscosity for the purpose of computing the most accurate flow profile compensation (K_{Re}).

Ultrasonic sensor types

Two basic types of clamp-on sensors can be selected for use with the SITRANS F S flowmeter. The lower cost "universal" sensor is the most common type in the industry and is suitable for most single liquid applications where the sound velocity does not vary much. This sensor type can be used on any sonically conductive pipe material (including steel) making it well suited for portable survey applications. Universal sensors are selected based on the pipe diameter range alone, so wall thickness is less important to the selection process.

The second sensor type is the "WideBeam" sensor (called high precision), which utilizes the pipe wall as a kind of waveguide to optimize the signal to noise ratio and provide a wider area of vibration. This makes this kind of sensor less sensitive to any change in the fluid medium.

The WideBeam sensor is designed for steel pipes, but can also be used with aluminum and titanium. It is the preferred sensor for HPI applications. Note that unlike the universal type, this sensor selection is dependent only on the pipe's wall thickness.

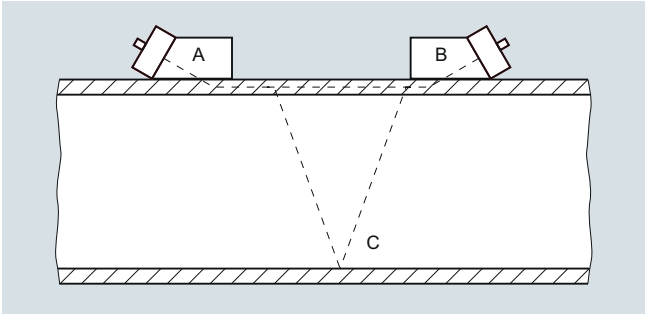

Multi-path flowmeters

For improved flow profile averaging, redundancy or better cost per measurement, clamp-on meters can be supplied with 1, 2, 3 or 4 path measurement systems.

In the standard FS230 systems, these can be installed on a single pipe as shown below (four paths on same pipe).

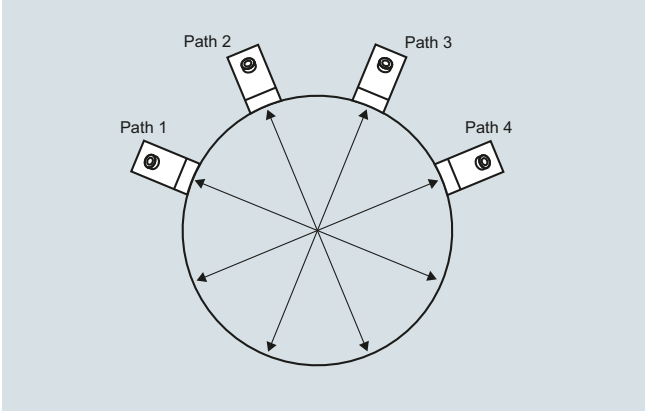

Four path installation example

© Siemens 2020

Function (continued)

SITRANS meter family description

SITRANS FS230 clamp-on flowmeters

The FS230 system is a basic function, permanent (or dedicated) Clamp-on meter that is available with a full range of safety approvals and I/Os. This meter can be used in a wide range of applications.

FST030 transmitter standard flow functions

When configured with standard flow functions, the FST030 transmitter is typically programmed with a fixed viscosity and specific gravity entry, which can limit the mass flow and volumetric flow accuracy when highly variable (multi-product) liquid properties flow through the same pipeline.

It will have the ability to accommodate clamp-on RTDs, or analog input from a temperature transmitter.

FST030 hydrocarbon flow functions

When configured with hydrocarbon functions, the FST030 can be used for applications that will flow a wide range of viscosity with a standard volume (mass) and interface detection functions available. All functions rely on a variable referred to as "LiquIdent (TM)", which is used to infer the liquid's viscosity and density. This variable represents the measured liquid sonic velocity compensated by the operating temperature and pressure, so for a given liquid product the measured LiquIdent (TM) output will remain constant over a wide range of pressure or temperature.

Standard volume description:

This LiquIdent (TM) variable can also be used to identify the liquid flowing through the pipe as well as it's physical properties (density, viscosity and compressibility) at base conditions. With this information the meter can be configured to output a temperature and pressure compensated (standard) volume flow rate using the API MPMS chapter 11.2.1 methods as shown below.

Correction for temperature:
Compute thermal expansion coefficient (α_b):
$\alpha_b = KO / \rho_b^2 + K1 / \rho_b$
where: KO and K1 are constants dependent on type of liquid and ρb is the liquid density at base conditions
Compute temperature correction factor (K_T):
$K_T = \rho_b * EXP(- \alpha_b \Delta T (1 + 0.8 \alpha_b \Delta T))$
where: ΔT = (T – base temperature)
Correction for pressure:
Compute compressibility factor (F):
$F = EXP(A + B T + (C + D T) / \rho_b^2$
where: A, B, C and D are constants, and "T" is liquid temperature
Compute pressure correction factor (K_p):
$K_p = 1 / (1 – F (P_{act} – P_{base}) * 10^{-4})$
Final volume correction: $Q_{std} = Q_{act} * K_t * K_p$

Available outputs from this meter include: API, standard density, mass flowrate, standard volume flowrate and liquid identification.

General installation guidelines for transit time clamp-on sensor

- Minimum measuring range: 0 to ± 0.3 m/s velocity (see meter accuracy graph below for more detail)
- Maximum measuring range: 0 to ± 12 m/s (± 30 m/s for high precision sensors). Final flow range determination requires application review

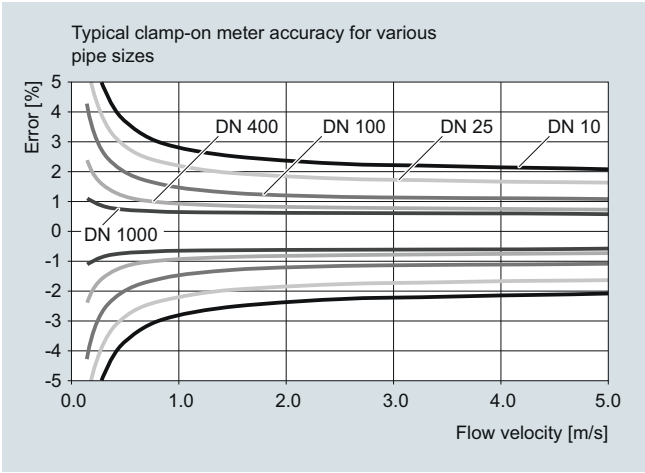

- Pipe must be completely full within the sensor installation volume for accurate flow measurement
- Typical MINIMUM straight pipe requirements are: 10 Diameters upstream/5 Diameters downstream. Additional straight run is required for double out-of-plane elbows and partially open valves.
- Sensors should be installed at least 20° off vertical for horizontal pipes. This reduces the chance of beam interference from gas buildup at the top of the pipe
- Operation inside the Reynolds transition region, between 1000 < Re < 5000 should be avoided for best accuracy
- Submersible and direct burial installations can be accommodated. Consult sales representative for details
- Ultrasonic coupling compound is provided with all sensor orders. Insure that a permanent coupling compound is used for long term installations
- Refer to the "Sensor type selection guide" to insure proper application of the equipment

© Siemens 2020

Function (continued)

Sensor type selection guide

Considerations for sensor selection	Standard sensor supported in MLFB: **High precision**	**Universal**	Notes
Media			
General survey (clean liquids) on non-steel pipes		X	
General survey (clean liquids) on a limited range of steel pipes	X		
Moderately aerated liquid or slurry, up to 121 °C (250 °F)	X		
Permanent installation on steel pipe (clean liquids and gases)	X		
Installation in offshore or corrosive environment	X[1)]	X[2)]	Sensor size C/D/E come standard as corrosion resistant. Size A and B optional stainless steel
Liquid temperature greater than 120 °C (248 °F)	O	X	FSS200 high temperature metal block sensors (up to 232 °C (450 °F))
Operation on single pipeline flowing multiple products	X	O	
Pipe material			
Steel	X		
Steel pipe with diameter/wall thickness ratio <10	O	X	
Non-steel pipe material (copper, ductile iron, cast iron, etc.)	O	X	High precision sensors can also be used on plastic and aluminum pipes in special cases
Wall thickness > 31.75 mm (1.25")	O	X	

O = not suitable X = preferred choice

1) For steel and stainless steel pipes only

2) Not preferred for steel pipes

Definitions

Sensor chart	Description
FSS200	Formerly 1011 clamp-on sensors of the 1010 systems
Standard	Standard system sensor, selectable as part of a configured product
Special	Sensors available for non-standard applications and pipes. Contact tech support for application use
Corrosion resistant	Stainless steel metal parts on all Size C, D and E and all high temperature sensors
Aluminum	Aluminum metal parts on all HP and Universal size A and B (Corrosion resistant on request for size B)
Spare	Not available as part of a configured product, must be ordered separately
CE	Transmitter and sensors certified for sale in the EU
Trackless mount	Sensors fixed only by straps, no other mounting (spacer bar as an option) - not recommended
Tracks	Permanent installation for universal size A/B, high precision size A/B and all sizes of high temperature. Tracks always come as dual-part for either direct or reflect mounting, and always with straps.
Frames	Three sizes, for permanent installation for universal size C/ D/ E, and for high precision size C/D. For universal and high precision size B available for pipes > 125 OD (Spare)
T1	Usable from -40 ... +120 °C (-40 ... +248 °F), but best for Ø temperature below 80 °C (< 176 °F), standard
T2	Usable from -40 ... +120 °C (-40 ... +248 °F), but best for Ø temperature above 80 °C (> 176 °F)
Submersible	Sensors can be used submerged; adding Denso for supplemental protection is recommended

© Siemens 2020

Function (continued)

Sensor availability guide

Sensor models	Standard	Spare only	ATEX/FM/FMc/IECEX	Corrosion restistant	Trackless	Tracks	Frames	High precision mount	T1 best use < 80 °C (176 °F)	T2 best use > 80 °C (176 °F)	Submersible	Catalog
	Availability											
FSS200 Universal Sensor -40 … 120 °C (-40 ... +248 °F) Polyetherimide - stainless steel housing CE IP68												
A1 Universal for pipe OD – 5.8 … 50.8 mm (0.23" … 2")		X	X	X	X[1)]	X					X	
A2 Universal for pipe OD – 12.7 … 50.8 mm (0.5" … 2")	X		X	X	X[1)]	X					X	X
B1 Universal for pipe OD – 12.7 … 76 mm (0.5" … 3")		X	X	X	X[1)]	X	X				X	
B2 Universal for pipe OD – 12.7 … 76 mm (0.5" … 3")		X	X	X	X[1)]	X	X				X	
B3 Universal for pipe OD – 19 … 127 mm (0.75" … 5"")	X		X	X	X[1)]	X	X				X	X
C1 Universal for pipe OD – 51 … 254 mm (2" … 10")		X	X	X	X		X				X	
C2 Universal for pipe OD – 51 … 254 mm (2" … 10")		X	X	X	X		X				X	
C3 Universal for pipe OD – 51 … 305 mm (2" … 12")	X		X	X	X		X				X	X
D1 Universal for pipe OD – 102 … 508 mm (4" … 20")		X	X	X	X		X				X	
D2 Universal for pipe OD – 152 … 610 mm (6" … 24")		X	X	X	X		X				X	
D3 Universal for pipe OD – 203 … 610 mm (8" … 24")	X		X	X	X		X				X	X
*E1 Universal for pipe OD – 254 … 3048 mm (10" … 120")		X	X	X	X		X				X	
*E2 Universal for pipe OD – 254 … 6096 mm (10" … 240")	X		X	X	X		X				X	X
*E3 Universal for pipe OD – 304 … 10007 mm (12" … 394")		X	X	X	X		X	X			X	
FSS200 High Precision Sensor -40 ... +120 °C (-40 ... +248 °F) Polyetherimide - stainless steel housing T1/T2 CE IP68												
A1H (High Precision) for pipe WT - 0.64 ... 1.0 mm (0.025" ... 0.04")		X	X	X	X[1)]	X			X		X	X
A2H (High Precision) for pipe WT - 1.0 ... 1.5 mm (0.04" ... 0.06")	X		X	X	X[1)]	X			X		X	X
A3H (High Precision) for pipe WT - 1.5 ... 2.0 mm (0.06" ... 0.08")	X		X	X	X[1)]	X			X		X	X
B1H (High Precision) for pipe WT - 2.0 ... 3.0 mm (0.08" ... 0.12")	X		X	X	X[1)]	X	X		X	X	X	X
B2H (High Precision) for pipe WT - 3.0 ... 4.1 mm (0.12" ... 0.16")	X		X	X	X[1)]	X	X		X	X	X	X
B3H (High Precision) for pipe WT - 2.7 ... 3.3 mm (0.106" ... 0.128")		X	X	X	X[1)]	X	X		X	X	X	X
C1H (High Precision) for pipe WT - 4.1 ... 5.8 mm (0.16" ... 0.23")	X		X	X	X		X	X	X	X	X	X
C2H (High Precision) for pipe WT - 5.8 ... 8.1 mm (0..23" ... 0.32")	X		X	X	X		X	X	X	X	X	X
* D1H (High Precision) for pipe WT - 8.1 ... 11.2 mm (0..32" ... 0.44")	X		X	X	X		X	X	X	X	X	X
* D2H (High Precision) for pipe WT - 11.2 ... 15.7 mm (0.44" ... 0.62")	X		X	X	X		X	X	X	X	X	X
* D3H (High Precision) for pipe WT - 7.4 ... 9.0 mm (0..293" ... 0.354")		X	X	X	X		X	X	X	X	X	X
* D4H (High Precision) for pipe WT - 15.7 ... 31.8 mm (0..62" ... 1.25")	X		X	X	X		X	X	X	X	X	X
FSS200 High Temperature Universal Sensor -40 ... +230 °C (-40 ... +446 °F)												
High Temperature size 1 ... 230 °C (Ø 12.7 ... 100 mm)		X	X	X		X						
High Temperature size 2 ... 230 °C (Ø 30 ... 200 mm)	X		X	X		X						X
High Temperature size 3 ... 230 °C (Ø 150 ... 610 mm)	X		X	X		X						X
High Temperature size 4 ... 230 °C (Ø 400 ... 1200 mm)	X		X	X		X						X
High Temperature size 2A ... 230 °C (Ø 30 ... 200 mm)		X	X	X		X						
High Temperature size 3A ... 230 °C (Ø 150 ... 610 mm)		X	X	X		X						
High Temperature size 4A ... 230 °C (Ø 400 ... 1200 mm)		X	X	X		X						

[1)] Usable, but not recommended for selection.

© Siemens 2020

Function (continued)

Sensor mounting availability guide

	Sensor		
	FSS200 Dedicated Universal	**FSS200 Dedicated High precision**	**FSS200 High temperature Universal**
Mounting			
Trackless[1)]	X	X	
Tracks universal dedicated	X		
Tracks HP dedicated		X	
Frames universal dedicated	X		
Frames HP dedicated		X	
Tracks high temperature universal			X
High precision mounting single enclosure		X	
High precision mounting dual enclosure		X	
SpacerBar	X	X	
Straps	X	X	X
Denso	X	X	

[1)] Usable but not recommended

© Siemens 2020

Overview

FST030 is based on the latest developments within Digital Signal Processing (DSP) technology – engineered for high measuring performance, fast response to step changes in flow, high immunity against process noise, easy to install commission and maintain.

The FST030 transmitter delivers true multi-parameter measurements i.e. volume flow, standard volume flow, density, mass flow, fluid sound velocity and temperature.

The multiple outputs and bus communication mean that all primary process information can be read either instantaneously (10 ms update) or periodically as required by plant operations.

Process values

- Volume flow
- Mass flow
- Flow velocity
- Sound velocity
- Standard volume flow (hydrocarbon variant only)
- Density
- Kinematic viscosity
- Pressure
- Medium temperature
- Specific gravity (hydrocarbon variant only)
- Totalizer 1
- Totalizer 2
- Totalizer 3
- Standard density (hydrocarbon variant only)
- Standard specific gravity (hydrocarbon variant only)
- Standardizing factor (hydrocarbon variant only)
- LiquIdent (hydrocarbon variant only)
- API gravity (hydrocarbon variant only)
- Standard API gravity (hydrocarbon variant only)
- Standard kinematic viscosity (hydrocarbon variant only)
- Liquid identifier (hydrocarbon variant only)

Benefits

Flow calculation and measurement

- Dedicated volume flow calculation with DSP technology
- 100 Hz update rate for all output on all primary process values
- Maximum data age from sensor to output is 20 ms
- Independent low flow cut-off settings for volume and mass flow, standard volume flow and velocity
- Zero-point adjustment on command from discrete input or host system

Operation and display

- User-configurable operation display
  - Full graphical display 240 x 160 pixels with up to 6 programmable views
  - Self-explaining alarm handling/log in clear text
  - Help text for all parameters appears automatically in the configuration menu
- SensorFlash technology stores production specific system documentation and provides removable memory of all flowmeter setups and functions
  - Calibration certificates (with ordered calibration)
  - Non-volatile memory backup of operational data
  - Transfer of user configuration to other flowmeters
  - 4GB SD card for storage and data logging
  - Audit trail of all parameter changes
  - Alarm logging

Alarms and safety

- Advanced diagnosis and service menu enhances troubleshooting and meter validation
- Configurable upper and lower alarm and warning limits for all process values
- Alarm handling can be selected between Siemens and NAMUR standard configurations

Outputs and control

- Monitoring comprising of 3 individually configurable totalizers
- Multi-parameter outputs, configurable outputs assigned individually to any of the following parameters:
  - Volume flow
  - Standard volume flow
  - Mass flow
  - Flow velocity
  - Sound velocity
  - Density
  - Process viscosity
  - Process pressure
  - Process/medium temperature

Up to six I/O channels are configured as follows.

Channel 1

Channel 1 is 4 to 20 mA analog output with HART 7.5. The current signal can be configured for massflow, volumeflow and includes the availability of active or passive function selected by wiring on the non-Ex terminals. Alternative Modbus RTU RS 485 is available.

Channel 2

Channel 2 is a signal output which can be freely configured for any process variable.

- Analog current (0/4 to 20 mA)
- Frequency or pulse
- Operational and alarm status

Channels 3 and 4

Channels 3 and 4 can be ordered with signal (freely configured for any process variable) or relay outputs, or signal input.

© Siemens 2020

Benefits (continued)

Signal output

Signal output can be user configured to:

- Analog current (0/4 to 20 mA)
- Frequency or pulse
- Redundant frequency or pulse (linked to channel 2)
- Operational and alarm status

Signal input

Signal input can be user-configured for:

- Totalizer reset functions
- Force outputs or freeze process values
- Initiate automatic zero point adjustment

Relay

Relay output(s) can be user configured to:

- Alarm status

4-20 mA signal outputs and inputs are ordered as active or passive for Ex versions, active and passive for non-Ex versions - function selected by wiring on the terminals.

During initial commissioning of the flowmeter, all outputs can be forced to a preset value for simulation, verification or calibration purposes.

Channels 5 and 6 (with internal DSL)

- RTD temperature inputs for 1000, 500 or 100 Ω RTD's - 2, 3 or 4 wire RTD's supported
- Channels 5 and 6 (with external DSL option)
- RTD Temperature inputs or 4-20 ma inputs. Selectable in menu.

Approvals and certificates

The SITRANS FST030 transmitter was designed to comply with or exceed the requirements of international standards and regulations.

Design

The SITRANS FST030 is designed in an IP67/Nema 4X aluminum enclosure with corrosion resistant coating. It can be wall or pipe mounted and the enclosure can be locked with a padlock or wired with lead security seals. Includes all flow and DSL functions integrated into one unit.

The FST030 is available as standard with one current, HART 7.5 output and can be ordered with additional input/output functions.

The transmitter has a modular design with discrete, replaceable electronic modules and connection boards to maintain separation between functions and facilitate field service. All modules are fully traceable and their provenance is included in the transmitter setup.

SensorFlash

SensorFlash is a standard, 4 GB micro SD card with the ability to be updated by PC. It is supplied with each transmitter and comes with a complete set of certification documents including report if ordered. Factory conformance certificates are optional at ordering.

The Siemens SensorFlash memory unit offers the following features and benefits:

- Copy site setups to SD card for easy transfer to other similar transmitters
- Permanent database of operational and functional information from the moment that the flowmeter is switched on
- New firmware updates can be downloaded from the Siemens internet portal for Product Support and placed onto SensorFlash (unmounted from the transmitter and inserted into a PC's SD card slot). The firmware is then inserted into the existing flowmeter for system/firmware upgrade.

Function

The following functions are available:

- Up to four configurable outputs and 2 RTD input channels selected at ordering
- Outputs can be individually configured for mass flow, volume flow etc.
- Three built-in totalizers which can count positive, negative or net flows
- Independent low flow cut-offs, adjustable
- Uni/bidirectional flow measurement
- Flow direction adjustable
- Alarm system consisting of alarm-log, alarm pending menu
- Change log, logs all changes made to menu parameters or via communications
- Internal data logger
- Display of operating time with real-time clock
- Flowrate outputs are freely configurable between maximum negative and maximum positive flows according to the sensor capacity
- Limit switches programmable for flow, density and temperature. Limit points can be graded as warning and alarm for values both above and below nominal process conditions
- Zero adjustment menu, with zero point evaluation display
- Full service menu for effective and straight forward application and meter troubleshooting
- Precise temperature measurement ensures optimal accuracy on massflow and density
- Fully compatible with Siemens PDM version 8.2 service pack 1 or higher

© Siemens 2020

Technical specifications

Process media	• Suitable for virtually any sonically conductive fluid, including hazardous liquids • Aggregate state: Light slurry and liquid
Process variables	• Volume flow • Mass flow • Flow velocity • Sound velocity • Standard volume flow (hydrocarbon variant only) • Density • Kinematic viscosity • Pressure • Medium temperature • Specific gravity (hydrocarbon variant only) • Totalizer 1 • Totalizer 2 • Totalizer 3 • Standard density (hydrocarbon variant only) • Standard specific gravity (hydrocarbon variant only) • Standardizing factor (hydrocarbon variant only) • LiquIdent (hydrocarbon variant only) • API gravity (hydrocarbon variant only) • Standard API gravity (hydrocarbon variant only) • Standard kinematic viscosity (hydrocarbon variant only) • Liquid identifier (hydrocarbon variant only)
Current output	
Current	0 … 20 mA or 4 … 20 mA (channel 1 only 4 … 20 mA)
Load	< 500 Ω per channel
Time constant	0 … 100 s adjustable
Digital output	
Pulse	41.6 µs … 5 s pulse duration
Frequency	0 … 10 kHz, 50 % duty cycle, 120 % overscale provision
Time constant	0 … 100 s adjustable
Active	0 … 22 V DC, 30 mA, short-circuit-protected
Passive	3 … 30 V DC, max. 110 mA
Relay	
Type	SPDT dry contact relay
Load	30 V AC/100 mA
Functions	Alarm level, alarm number, limit, flow direction
Digital input	
Voltage	15 … 30 V DC (2 … 15 mA)
Current	4 ... 20 mA
Functionality	Reset totalizer 1, 2 and 3, force output, freeze process values, zero point adjustment

Galvanic isolation	All inputs and outputs are galvanically isolated, isolation voltage 500 V
Alarm and warning limit	Available for all process values
Totalizer	Three counters for forward, net and reverse flow
Display	• Background illumination with alphanumerical text to indicate flow rate, totalized values, settings and faults • Adjustable damping constant of 0 ... 100 s • Reverse flow indicated by negative sign
SD card functions	• Parameter change log • Configurable data logger • FW update log • Diagnostic log • Error and alarm log • Parameter backup
Ambient temperature	
Operation	
• Transmitter	-40 ... +60 °C (-40 ... +140 °F), (humidity max. 95 %)
• Display	-20 ... +60 °C (-4 ... +140 °F)
Storage	
• Transmitter	-40 ... +70 °C (-40 ... +158 °F) (humidity max. 95 %)
Communication	HART 7.5 Modbus RTU RS 485
Enclosure	
Material	Aluminum
Rating	IP66/67, Nema 4X to IEC 529 and DIN 40050 (1 mH_2O for 30 min.)
Mechanical load	18 ... 400 Hz random, 3.17 g RMS, in all directions
Power supply	
Universal	20 ... 27 V DC 100 ... 240 V AC, 47 ... 63 Hz
Fluctuation	No limit
Power consumption	20 W/22 VA
Minimum pressure for Gas	7 … 10 bar (100 … 145 psi), typical (gas composition and application dependent; plastic pipes support operation at atmospheric pressure)
Environment	
Environmental conditions acc. to IEC/EN/UL 61010-1	• Altitude up to 2000 m • Pollution degree 2 • Overvoltage category II
Maintenance	The flowmeter has a built-in error log/pending menu which should be inspected on a regular basis
Cable glands	Cable glands are available in nylon, nickel plated brass or stainless steel (316L/W1.4404)

© Siemens 2020

Technical specifications (continued)

Approvals	
For non-hazardous area	No approval required
For hazardous area	
• ATEX	
- Sensor	Zone 0, 1, 2
- Transmitter with integrated DSL	Zone 2
- External DSL	Zone 0, 1, 2
• FM	
- Sensor	Class 1, Div 1, 2
- Transmitter	Class 1, Div 2
- External DSL	Class 1, Div 1
• FM Canada	
- Sensor	Class 1, Div 1, 2 (Zone 0, 1, 2)
- Transmitter with integrated DSL	Class 1, Div 2 (Zone 2)
- External DSL	Class 1, Div 1, 2 (Zone 0, 1, 2)
• Combination Approval: ATEX, IECEx, FM, FM Canada	
- Sensor	Zone 0, 1, 2 (Div 1, 2)
- Transmitter with integrated DSL	Zone 2 (Div 2)
- External DSL	Zone 0, 1, 2 (Div 1)

Certificates	
CE conformity marking	• Low voltage directive • WEEE • RoHS
EMC performance	
Emission	CISPR 11:2009/A1:2010 and EN 55011:2009/A1:2010
Immunity	IEC/EN 61326-1:2013

Dimensional drawing

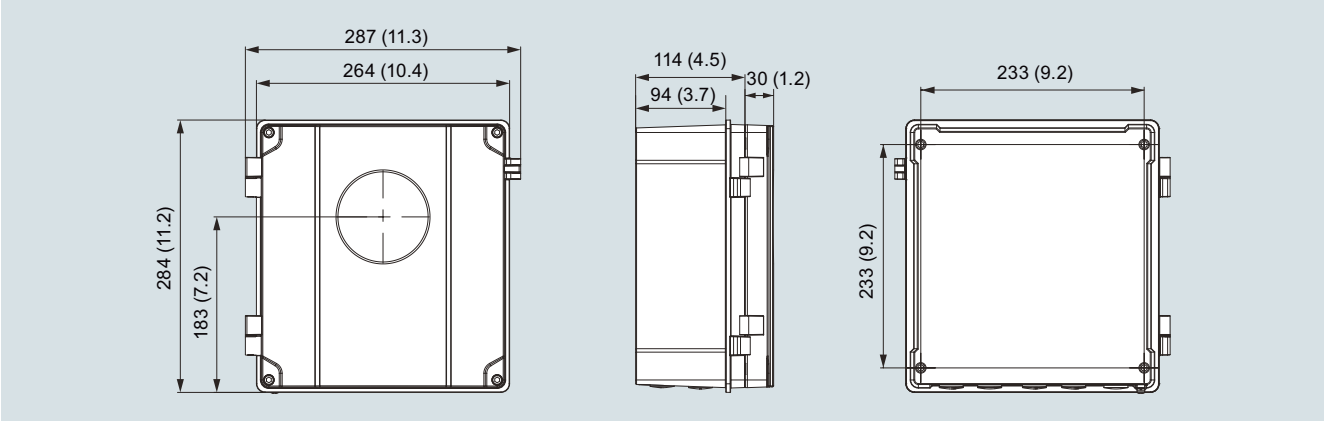

SITRANS FST030, wall mount version, dimensions in mm (inch)

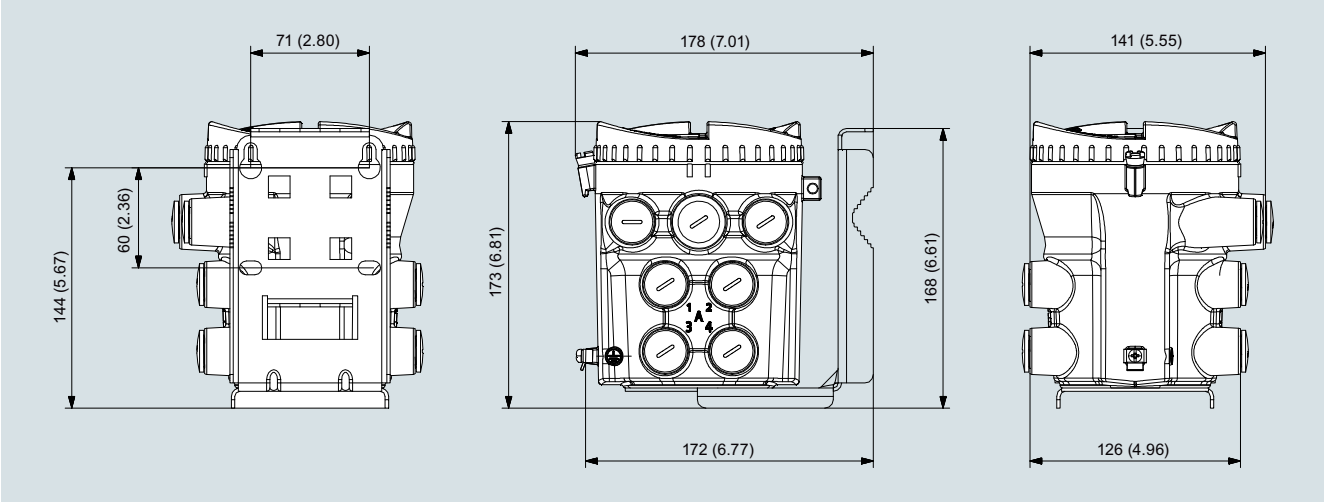

External DSL, dimensions in mm (inch)

© Siemens 2020

Selection and ordering data

	Article No.
SITRANS FS230 clamp-on flowmeter ↗	**7ME37** ■ - ■■ ■■■ - ■■■■
↗ Click on the Article No. for the online configuration in the PIA Life Cycle Portal.	
Transmitter model	
Transmitter FST030	3
Pipe material/temperature	
Transmitter only - no sensor	0
Steel (stainless steel, carbon steel), temperature range: best use < 80 °C (176 °F)	1
Steel (stainless steel, carbon steel), temperature range: best use > 80 °C (176 °F)	2
Plastic (PVC) (for gas applications), temperature: -40 ... 65.5 °C (-40 ... 150 °F)	4
Plastic (PVC) (for liquid applications), temperature: -40 ... +121 °C (-40 ... 250 °F)	6
Any material, temperature: -40 ... +121 °C (-40 ... 250 °F)	7
Any material, very high temperature: -40 ... +230 °C (-40 ... 446 °F)	8
Pipe outer diameter range	
Transmitter only - no sensor	A
13 ... 19 mm (0.5 ... 0.75")	B
19.3 ... 30.5 mm (0.76 ... 1.20")	C
30.7 ... 50.8 mm (1.21 ... 2.00")	D
51 ... 76 mm (2.01 ... 3.00")	E
78 ... 127 mm (3.1 ... 5.0")	F
129 ... 203 mm (5.1 ... 8.0")	G
206 ... 305 mm (8.1 ... 12.0")	H
307 ... 508 mm (12.1 ... 20.0")	J
510 ... 813 mm (20.1 ... 32.0")	K
815 ... 9144 mm (32.1 ... 360")	L
Pipe wall thickness range	
Transmitter only - no sensor	A
0.635 ... 1.016 mm (0.025 ... 0.04")	B
1.016 ... 1.524 mm (0.04 ... 0.06")	C
1.524 ... 2.032 mm (0.06 ... 0.08")	D
2.032 ... 3.048 mm (0.08 ... 0.12")	E
3.048 ... 4.064 mm (0.12 ... 0.16")	F
4.064 ... 5.842 mm (0.16 ... 0.23")	G
5.842 ... 8.128 mm (0.23 ... 0.32")	H
8.128 ... 11.176 mm (0.32 ... 0.44")	J
11.176 ... 15.748 mm (0.44 ... 0.62")	K
15.748 ... 31.75 mm (0.62 ... 1.25")	L
31.75 ... 50.8 mm (1.25 ... 2.00")	M
Sensor mounting	
Transmitter only - no sensor	0
Mounting straps only	1
Standard frames and tracks	2
Magnetic - no straps	4
Magnetic - with straps	6
High precision mount (single enclosure)	7
High precision mount (dual enclosure)	8
Number of paths (sensor pairs)	
Transmitter only - no sensor	0
One path	1
Two path	2
Three path	3
Four path	4

	Article No.
SITRANS FS230 clamp-on flowmeter	**7ME37** ■ - ■■■■ - ■■■■
Environment	
Standard	1
Transmitter/DSL material and mounting style	
Replacement DSL for option V transmitter, no transmitter DSL: aluminium cast, Nema 4X, M12 socket for DSL to transmitter interconnect cable	N
Replacement DSL for option W transmitter, no transmitter DSL: aluminium cast, Nema 4X, terminal block for DSL to transmitter interconnect cable	Q
Wallmount transmitter, internal DSL Transmitter: aluminum wallbox, Nema 4X DSL: none, direct connected sensor cables (max 2-path, max. 20 meter sensor cable)	U
Wall box housing, external DSL, remote to sensor Transmitter: aluminum wallbox, Nema 4X DSL: aluminum cast, Nema 4X, M12 socket for DSL to transmitter interconnect cable (max 4-path, max. 20 meter sensor cable, max. 150 meter interconnect cable)	V
Wall box housing, external DSL, remote to sensor Transmitter: aluminum wall box, Nema 4X DSL: aluminum cast, Nema 4X, terminal block for DSL to transmitter interconnect cable (max. 4-path, max. 20 meter sensor cable, max. 150 meter interconnect cable)	W
Ex approvals	
Non-Ex	A
ATEX, wallbox enclosure	B
IECEx, wallbox	E
FM, FMc, wallbox enclosure	G
ATEX, IECEx, FM, FMc, wallbox	P
Local User Interface	
Blind version transmitter	1
Graphical local user interface, 240 x 160 pixels	3

© Siemens 2020

Selection and ordering data for SITRANS FS230

Selection and ordering data	Order code
Further designs	
Please add **"-Z"** to Article No. and specify Order code(s) and plain text.	
Cable glands - transmitter, DSL (not for sensor cables)	
No glands, metric threads on transmitter	**A01**
No glands, metric thread with NPT thread adapters, nickel plated brass: quantity based on selection "N" in data place 14	**A40**
No glands, metric thread with NPT thread adapters, stainless steel: quantity based on selection "N" in data place 14	**A41**
Nickel plated brass glands: quantity based on selection "N" in data place 14	**A42**
Plastic glands: quantity based on selection "N" in data place 14	**A44**
Stainless steel glands: quantity based on selection "N" in data place 14	**A46**
No glands, metric thread with NPT thread adapters, nickel plated brass: quantity based on selection "Q" in data place 14	**A50**
No glands, metric thread with NPT thread adapters, stainless steel: quantity based on selection "Q" in data place 14	**A51**
Nickel plated brass glands: quantity based on selection "Q" in data place 14	**A52**
Plastic glands: quantity based on selection "Q" in data place 14	**A54**
Stainless steel glands: quantity based on selection "Q" in data place 14	**A56**
No glands, metric thread with NPT thread adapters, stainless steel: quantity based on selection "U" in data place 14	**A60**
No glands, metric thread with NPT thread adapters, nickel plated brass: quantity based on selection "U" in data place 14	**A61**
Nickel plated brass glands: quantity based on selection "U" in data place 14	**A62**
Plastic glands: quantity based on selection "U" in data place 14	**A64**
Stainless steel glands: quantity based on selection "U" in data place 14	**A66**
No glands, metric thread with NPT thread adapters, nickel plated brass: quantity based on selection "V" in data place 14	**A70**
No glands, metric thread with NPT thread adapters, stainless steel: quantity based on selection "V" in data place 14	**A71**
Nickel plated brass glands: quantity based on selection "V" in data place 14	**A72**
Plastic glands: quantity based on selection "V" in data place 14	**A74**
Stainless steel glands: quantity based on selection "V" in data place 14	**A76**
No glands, metric thread with NPT thread adapters, nickel plated brass: quantity based on selection "W" in data place 14	**A80**
No glands, metric thread with NPT thread adapters, stainless steel: Quantity based on selection "W" in data place 14	**A81**
Nickel plated brass glands: quantity based on selection "W" in data place 14	**A82**
Plastic glands: quantity based on selection "W" in data place 14	**A84**
Stainless steel glands: quantity based on selection "W" in data place 14	**A86**

	Order code
Software functions and CT approvals	
Software: for standard industry applications	**B11**
Software including hydrocarbon process values	**B39**
Software including gas process values	**B50**
I/O configuration Ch1	
Non-Ex, 4 ... 20 mA HART, menu selected passive/active	**E02**
Ex, 4 ... 20 mA HART, active	**E06**
Ex, 4 ... 20 mA HART, passive	**E07**
Modbus RTU 485	**E14**
I/O configuration Ch2, Ch3 and Ch4	
None	**F00**
Non-Ex	
• Ch2: current/freq./pulse, Ch3: none Ch4: none. Active/passive menu selected	**F01**
• Ch2: current/freq./pulse, Ch3: current/freq./pulse Ch4: none. Active/passive menu selected	**F02**
• Ch2:current/freq./pulse, Ch3: current/freq./pulse Ch4:current/freq./pulse. Active/passive menu selected	**F03**
• Ch2:current/freq./pulse, Ch3: current/freq./pulse Ch4: relay. Active/passive menu selected	**F04**
• Ch2: current/freq./pulse, Ch3: relay Ch4: relay. Active/passive menu selected	**F05**
• Ch2: current/freq./pulse, Ch3: relay Ch4: none. Active/passive menu selected	**F06**
Ex Active	
• Ch2: current/freq./pulse, Ch3: none Ch4: none	**F11**
• Ch2: current/freq./pulse, Ch3: current/freq./pulse Ch4: none	**F12**
• Ch2: current/freq./pulse, Ch3: current/freq./pulse Ch4: current/freq./pulse	**F13**
• Ch2: current/freq./pulse, Ch3: current/freq./pulse, Ch4: relay	**F14**
• Ch2: current/freq./pulse, Ch3: relay, Ch4: relay	**F15**
• Ch2: current/freq./pulse, Ch3: relay, Ch4: none	**F16**
Ex Passive	
• Ch2: current/freq./pulse, Ch3: none, Ch4: none	**F21**
• Ch2: current/freq./pulse, Ch3: current/freq./pulse Ch4: None	**F22**
• Ch2:current/freq./pulse, Ch3: current/freq./pulse Ch4:current/freq./pulse	**F23**
• Ch2: current/freq./pulse, Ch3: current/freq./pulse Ch4: relay	**F24**
• Ch2: current/freq./pulse, Ch3: relay, Ch4: relay	**F25**
• Ch2: current/freq./pulse, Ch3: relay, Ch4: none	**F26**
DSL strap kit (to strap DSL to pipe)	
• 60.3 mm (2 inch) pipe mount with U-bolts	**G01**
• Stainless steel strap to mount DSL to pipe DN 60 ... 150 pipe size (2 ... 6 inch)	**G03**
• Stainless steel strap to mount DSL to pipe DN 150 ... 300 (6 ... 12 inch)	**G05**
• Stainless steel strap to mount DSL to pipe DN 300 ... 400 (12 ... 16 inch)	**G07**
• Stainless steel strap to mount DSL to pipe DN 400 ... 600 (16 ... 24 inch)	**G08**
Temperature sensors and pockets	
1000 Ω platinum standard clamp-on RTD	**J61**
1000 Ω platinum submersible clamp-on RTD	**J62**

© Siemens 2020

Selection and ordering data

	Order code
Sensor cables to transmitter/DSL for 1-path	
1 m (3.2 ft) standard/submersible coax sensor cable pair with nylon glands	**K21**
3 m (9.8 ft) standard/submersible coax sensor cable pair with nylon glands	**K22**
5 m (16.4 ft) standard/submersible coax sensor cable pair with nylon glands	**K23**
10 m (32.8 ft) standard/submersible coax sensor cable pair with nylon glands	**K24**
20 m (65.6 ft) standard/submersible coax sensor cable pair with nylon glands	**K25**
1 m (3.2 ft) standard/submersible coax sensor cable pair with nickel plated brass glands	**K26**
3 m (9.8 ft) standard/submersible coax sensor cable pair with nickel plated brass glands	**K27**
5 m (16.4 ft) standard/submersible coax sensor cable pair with nickel plated brass glands	**K28**
10 m (32.8 ft) standard/submersible coax sensor cable pair with nickel plated brass glands	**K29**
20 m (65.6 ft) standard/submersible coax sensor cable pair with nickel plated brass glands	**K30**
1 m (3.2 ft) standard/submersible coax sensor cable pair with stainless steel glands	**K31**
3 m (9.8 ft) standard/submersible coax sensor cable pair with stainless steel glands	**K32**
5 m (16.4 ft) standard/submersible coax sensor cable pair with stainless steel glands	**K33**
10 m (32.8 ft) standard/submersible coax sensor cable pair with stainless steel glands	**K34**
20 m (65.6 ft) standard/submersible coax sensor cable pair with stainless steel glands	**K35**
5 m (16.4 ft) plenum rated coax sensor cable pair with nylon glands	**K36**
20 m (65.6 ft) plenum rated coax sensor cable pair with nylon glands	**K37**
5 m (16.4 ft) plenum rated coax sensor cable pair with nickel plated brass glands	**K38**
20 m (65.6 ft) plenum rated coax sensor cable pair with nickel plated brass glands	**K39**
5 m (16.4 ft) plenum rated coax sensor cable pair with stainless steel glands	**K40**
20 m (65.6 ft) plenum rated coax sensor cable pair with stainless steel glands	**K41**
1 m (3.2 ft) armored sensor cable pair with nickel plated brass glands. Temperature: -25 ... +80 C	**K50**
3 m (9.8 ft) armored sensor cable pair with nickel plated brass glands. Temperature: -25 ... +80 C	**K51**
5 m (16.4 ft) armored sensor cable pair with nickel plated brass glands. Temperature: -25 ... +80 C	**K52**
10 m (32.8 ft) armored sensor cable pair with nickel plated brass glands	**K53**
20 m (65.6 ft) armored sensor cable pair with nickel plated brass glands	**K54**
10 m (32.8 ft) standard/submersible coax sensor cable pair with no transmitter glands	**K76**
20 m (65.6 ft) standard/submersible coax sensor cable pair with no transmitter glands	**K77**
20 m (65.6 ft) plenum rated coax sensor cable pair with no glands	**K78**

	Order code
Sensor cables to transmitter/DSL for 2-path	
1 m (3.2 ft) standard/submersible coax sensor cable pair with nylon glands	**T21**
3 m (9.8 ft) standard/submersible coax sensor cable pair with nylon glands	**T22**
5 m (16.4 ft) standard/submersible coax sensor cable pair with nylon glands	**T23**
10 m (32.8 ft) standard/submersible coax sensor cable pair with nylon glands	**T24**
20 m (65.6 ft) standard/submersible coax sensor cable pair with nylon glands	**T25**
1 m(3.2 ft) standard/submersible coax sensor cable pair with nickel plated brass glands	**T26**
3 m (9.8 ft) standard/submersible coax sensor cable pair with nickel plated brass glands	**T27**
5 m (16.4 ft) standard/submersible coax sensor cable pair with nickel plated brass glands	**T28**
10 m (32.8 ft) standard/submersible coax sensor cable pair with nickel plated brass glands	**T29**
20 m (65.6 ft) standard/submersible coax sensor cable pair with nickel plated brass glands	**T30**
1 m (3.2 ft) standard/submersible coax sensor cable pair with stainless steel glands	**T31**
3 m (9.8 ft) standard/submersible coax sensor cable pair with stainless steel glands	**T32**
5 m (16.4 ft) standard/submersible coax sensor cable pair with stainless steel glands	**T33**
10 m (32.8 ft) standard/submersible coax sensor cable pair with stainless steel glands	**T34**
20 m (65.6 ft) standard/submersible coax sensor cable pair with stainless steel glands	**T35**
5 m (16.4 ft) plenum rated coax sensor cable pair with nylon glands	**T36**
20 m (65.6 ft) plenum rated coax sensor cable pair with nylon glands	**T37**
5 m (16.4 ft) plenum rated coax sensor cable pair with nickel plated brass glands	**T38**
20 m (65.6 ft) plenum rated coax sensor cable pair with nickel plated brass glands	**T39**
5 m (16.4 ft) plenum rated coax sensor cable pair with stainless steel glands	**T40**
20 m (65.6 ft) plenum rated coax sensor cable pair with stainless steel glands	**T41**
1 m (3.2 ft) armored sensor cable pair with nickel plated brass glands. Temperature: -25 ... +80 C	**T50**
3 m (9.8 ft) armored sensor cable pair with nickel plated brass glands. Temperature: -25 ... +80 C	**T51**
5 m (16.4 ft) armored sensor cable pair with nickel plated brass glands. Temperature: -25 ... +80 C	**T52**
10 m (32.8 ft) armored sensor cable pair with nickel plated brass glands	**T53**
20 m (65.6 ft) armored sensor cable pair with nickel plated brass glands	**T54**
10 m (32.8 ft) standard/submersible coax sensor cable pair with no transmitter glands	**T76**
20 m (65.6 ft) standard/submersible coax sensor cable pair with no transmitter glands	**T77**
20 m (65.6 ft) plenum rated coax sensor cable pair with no glands	**T78**

© Siemens 2020

Selection and ordering data for SITRANS FS230

Selection and ordering data	Order code
Sensor cables to transmitter/DSL for 3-path	
1 m (3.2 ft) standard/submersible coax sensor cable pair with nylon glands	**U21**
3 m (9.8 ft) standard/submersible coax sensor cable pair with nylon glands	**U22**
5 m (16.4 ft) standard/submersible coax sensor cable pair with nylon glands	**U23**
10 m (32.8 ft) standard/submersible coax sensor cable pair with nylon glands	**U24**
20 m (65.6 ft) standard/submersible coax sensor cable pair with nylon glands	**U25**
1 m (3.2 ft) standard/submersible coax sensor cable pair with nickel plated brass glands	**U26**
3 m (9.8 ft) standard/submersible coax sensor cable pair with nickel plated brass glands	**U27**
5 m (16.4 ft) standard/submersible coax sensor cable pair with nickel plated brass glands	**U28**
10 m (32.8 ft) standard/submersible coax sensor cable pair with nickel plated brass glands	**U29**
20 m (65.6 ft) standard/submersible coax sensor cable pair with nickel plated brass glands	**U30**
1 m (3.2 ft) standard/submersible coax sensor cable pair with stainless steel glands	**U31**
3 m (9.8 ft) standard/submersible coax sensor cable pair with stainless steel glands	**U32**
5 m (16.4 ft) standard/submersible coax sensor cable pair with stainless steel glands	**U33**
10 m (32.8 ft) standard/submersible coax sensor cable pair with stainless steel glands	**U34**
20 m (65.6 ft) standard/submersible coax sensor cable pair with stainless steel glands	**U35**
5 m (16.4 ft) plenum rated coax sensor cable pair with nylon glands	**U36**
20 m (65.6 ft) plenum rated coax sensor cable pair with nylon glands	**U37**
5 m (16.4 ft) plenum rated coax sensor cable pair with nickel plated brass glands	**U38**
20 m (65.6 ft) plenum rated coax sensor cable pair with nickel plated brass glands	**U39**
5 m (16.4 ft) plenum rated coax sensor cable pair with stainless steel glands	**U40**
20 m (65.6 ft) plenum rated coax sensor cable pair with stainless steel glands	**U41**
1 m (3.2 ft) armored sensor cable pair with nickel plated brass glands. Temperature: -25 ... +80 C	**U50**
3 m (9.8 ft) armored sensor cable pair with nickel plated brass glands. Temperature: -25 ... +80 C	**U51**
5 m (16.4 ft) armored sensor cable pair with nickel plated brass glands. Temperature: -25 ... +80 C	**U52**
10 m (32.8 ft) armored sensor cable pair with nickel plated brass glands	**U53**
20 m (65.6 ft) armored sensor cable pair with nickel plated brass glands	**U54**
10 m (32.8 ft) standard/submersible coax sensor cable pair with no transmitter glands	**U76**
20 m (65.6 ft) standard/submersible coax sensor cable pair with no transmitter glands	**U77**
20 m (65.6 ft) plenum rated coax sensor cable pair with no glands	**U78**

	Order code
Sensor cables to transmitter/DSL for 4-path	
1 m (3.2 ft) standard/submersible coax sensor cable pair with nylon glands	**V21**
3 m (9.8 ft) standard/submersible coax sensor cable pair with nylon glands	**V22**
5 m (16.4 ft) standard/submersible coax sensor cable pair with nylon glands	**V23**
10 m (32.8 ft) standard/submersible coax sensor cable pair with nylon glands	**V24**
20 m (65.6 ft) standard/submersible coax sensor cable pair with nylon glands	**V25**
1 m (3.2 ft) standard/submersible coax sensor cable pair with nickel plated brass glands	**V26**
3 m (9.8 ft) standard/submersible coax sensor cable pair with nickel plated brass glands	**V27**
5 m (16.4 ft) standard/submersible coax sensor cable pair with nickel plated brass glands	**V28**
10 m (32.8 ft) standard/submersible coax sensor cable pair with nickel plated brass glands	**V29**
20 m (65.6 ft) standard/submersible coax sensor cable pair with nickel plated brass glands	**V30**
1 m (3.2 ft) standard/submersible coax sensor cable pair with stainless steel glands	**V31**
3 m (9.8 ft) standard/submersible coax sensor cable pair with stainless steel glands	**V32**
5 m (16.4 ft) standard/submersible coax sensor cable pair with stainless steel glands	**V33**
10 m (32.8 ft) standard/submersible coax sensor cable pair with stainless steel glands	**V34**
20 m (65.6 ft) standard/submersible coax sensor cable pair with stainless steel glands	**V35**
5 m (16.4 ft) plenum rated coax sensor cable pair with nylon glands	**V36**
20 m (65.6 ft) plenum rated coax sensor cable pair with nylon glands	**V37**
5 m (16.4 ft) plenum rated coax sensor cable pair with nickel plated brass glands	**V38**
20 m (65.6 ft) plenum rated coax sensor cable pair with nickel plated brass glands	**V39**
5 m (16.4 ft) plenum rated coax sensor cable pair with stainless steel glands	**V40**
20 m (65.6 ft) plenum rated coax sensor cable pair with stainless steel glands	**V41**
1 m (3.2 ft) armored sensor cable pair with nickel plated brass glands. Temperature: -25 ... +80 C	**V50**
3 m (9.8 ft) armored sensor cable pair with nickel plated brass glands. Temperature: -25 ... +80 C	**V51**
5 m (16.4 ft) armored sensor cable pair with nickel plated brass glands. Temperature: -25 ... +80 C	**V52**
10 m (32.8 ft) armored sensor cable pair with nickel plated brass glands	**V53**
20 m (65.6 ft) armored sensor cable pair with nickel plated brass glands	**V54**
10 m (32.8 ft) standard/submersible coax sensor cable pair with no transmitter glands	**V76**
20 m (65.6 ft) standard/submersible coax sensor cable pair with no transmitter glands	**V77**
20 m (65.6 ft) plenum rated coax sensor cable pair with no glands	**V78**

© Siemens 2020

Selection and ordering data

	Order code
Cable, DSL to wallbox transmitter	
5 m (16.4 ft) standard DSL cable (2 mounted M12 plugs)	**L51**
5 m (16.4 ft) standard DSL cable (no plugs mounted)	**L52**
10 m (32.8 ft) standard DSL cable (2 mounted M12 plugs)	**L55**
10 m (32.8 ft) standard DSL cable (no plugs mounted)	**L56**
25 m (82 ft) standard DSL cable (2 mounted plugs)	**L59**
25 m (82 ft) standard DSL cable (no plugs mounted)	**L60**
50 m (164 ft) standard DSL cable (2 mounted plugs)	**L63**
50 m (164 ft) standard DSL cable (no plugs mounted)	**L64**
75 m (246.1 ft) standard DSL cable (2 mounted plugs)	**L67**
75 m (246.1 ft) standard DSL cable (no plugs mounted)	**L68**
150 m (492.1 ft) standard DSL cable (2 mounted plugs)	**L71**
150 m (492.1 ft) standard DSL cable (no plugs mounted)	**L72**
RTD cable (clamp temperature sensor to transmitter)	
6 m (20 ft) standard RTD cable	**R50**
15 m (50 ft) standard RTD cable	**R51**
30 m (100 ft) standard RTD cable	**R52**
46 m (150 ft) standard RTD cable	**R53**
61 m (200 ft) standard RTD cable	**R54**
91 m (300 ft) standard RTD cable	**R55**
6 m (20 ft) submersible RTD cable	**R56**
15 m (50 ft) submersible RTD cable	**R57**
30 m (100 ft) submersible RTD cable	**R58**
46 m (150 ft) submersible RTD cable	**R59**
61 m (200 ft) submersible RTD cable	**R60**
91 m (300 ft) submersible RTD cable	**R61**

	Order code
RTD cable (insert temperature sensor to transmitter)	
15 m (50 ft) RTD cable with nickel plated gland	**R74**
15 m (50 ft) RTD cable with stainless steel gland	**R75**
30 m (100 ft) RTD cable with nickel plated gland	**R76**
30 m (100 ft) RTD cable with stainless steel gland	**R77**
91 m (300 ft) RTD cable with nickel plated gland	**R78**
91 m (300 ft) RTD cable with stainless steel gland	**R79**
15 m (50 ft) insert RTD cable with nickel plated gland	**R80**
15 m (50 ft) insert RTD cable with stainless steel gland	**R81**
30 m (100 ft) insert RTD cable with nickel plated gland	**R82**
30 m (100 ft) insert RTD cable with stainless steel gland	**R83**
91 m (300 ft) insert RTD cable with nickel plated gland	**R84**
91 m (300 ft) insert RTD cable with stainless steel gland	**R85**
Mass storage	
Enable mass storage function for SD card (not available for USA)	**S30**
Tag plate	
Tag plate for external DSL, stainless steel	**Y14**
Tag plate for transmitter, stainless steel	**Y15**
Tag name plate, stainless steel	**Y17**

© Siemens 2020

3

Selection and ordering data	Article No.
System spare parts	
Tool kits andand loose parts	
"F" connector tool kit, 2 per	**A5E38145699**
Bag of loose spare parts; for wallmount, including cable strain relief components, mounting tool, seals and gasket, assorted screws and washers, hex cap nut, blind plugs, and O-rings	**A5E38288072**
Electronics assemblies and modules	
Wall mount transmitter	
• Display and keypad assembly	**A5E37697615**
• Digital Sensor Link (DSL), internal, module only, for wall box, standard process values	**A5E38014726**
• Digital Sensor Link (DSL), internal, module only, for wall box, hydrocarbon process values	**A5E42138542**
• Digital Sensor Link (DSL), internal, module only, for wall box, gas process values	**A5E47202379**
• SensorFlash (4 GB micro SD card) -40 °C … +85 °C	**A5E38288507**
• Power supply, for wall box, (240 V AC, 47 ... 63 Hz), (24 ... 90 V DC)	**A5E38263021**
• Foam insert for wall box with connectors	**A5E38287828**
External DSL	
• Digital Sensor Link (DSL), external, module only, standard process values	**A5E38014662**
• Digital Sensor Link (DSL), external, module only, hydrocarbon process values	**A5E37843869**
• Digital Sensor Link (DSL), external, module only, gas process values	**A5E47202369**
• F connector board set: board A, board B and screws for mounting	**A5E45882316**
• Front end module cover plate with screws for mounting	**A5E45882046**
Cassettes, I/O configuration and communication	
Ex	
• Ch1: I/O and comm (active) 4 ... 20 mA output and HART 7.2	**A5E38012278**
• Ch1: I/O and comm (passive) 4 ... 20 mA output and HART 7.2	**A5E38013025**
• Ch1: communication Modbus RTU 485	**A5E38013054**
Non Ex	
• Ch1: I/O and comm (active/passive) 4 ... 20 mA output and HART 7.2	**A5E38013040**
• Ch1: communication Modbus RTU 485	**A5E38013069**
• Ch2: current/freq./pulse, Ch3: None Ch4: none. Menu select active/passive	**A5E38006256**
• Ch2: current/freq./pulse, Ch3: current/freq./pulse Ch4: none. Menu select active/passive	**A5E38006558**
• Ch2: current/freq./pulse, Ch3: current/freq./pulse Ch4: current/Freq./Pulse. Menu select active/passive	**A5E38006598**
• Ch2: current/freq./pulse, Ch3: current/freq./pulse Ch4: relay. Menu select active/passive	**A5E38006896**
• Ch2: current/freq./pulse, Ch3: relay Ch4: relay. Menu select active/passive	**A5E38006900**
• Ch2: current/freq./pulse, Ch3: relay Ch4: none. Menu select active/passive	**A5E38011432**

	Article No.
Ex Active	
• Ch2: current/freq./pulse, Ch3: None Ch4: none	**A5E38012039**
• Ch2: current/freq./pulse, Ch3: current/freq./pulse Ch4: none	**A5E38012056**
• Ch2: current/freq./pulse, Ch3: current/freq./pulse Ch4: current/freq./pulse	**A5E38012121**
• Ch2: current/freq./pulse, Ch3: current/freq./pulse Ch4: relay	**A5E38019235**
• Ch2: current/freq./pulse, Ch3: relay Ch4: relay	**A5E38019263**
• Ch2: current/freq./pulse, Ch3: relay Ch4: none	**A5E38019378**
Ex Passive	
• Ch2: current/freq./pulse, Ch3: none Ch4: none	**A5E38011478**
• Ch2: current/freq./pulse, Ch3: current/freq./pulse Ch4: none	**A5E38011509**
• Ch2: current/freq./pulse, Ch3: current/freq./pulse Ch4: current/freq./pulse	**A5E38011541**
• Ch2: current/freq./pulse, Ch3: current/freq./pulse Ch4: relay	**A5E38011600**
• Ch2: current/freq./pulse, Ch3: relay Ch4: relay	**A5E38011618**
• Ch2: current/freq./pulse, Ch3: relay Ch4: none	**A5E38011908**
Miscellaneous parts	
General	
• Blind plug brass-nickel 10 pcs (Ex version)	**A5E38145685**
• Blind plug stainless steel 10 pcs (Ex version)	**A5E38145689**
• F connectors, 4 pcs	**A5E38268608**
• M12 adapter for DSL or wall mounted transmitter	**A5E03906095**
Wall mount transmitter	
• Wall bracket "pipe mounting"	**A5E38288020**
• Wall bracket "panel mounting	**A5E38288032**
• Metal kit: PSU cover, back plane	**A5E38415145**
• Power input cover plate	**A5E38415205**
External DSL	
• Wall mount bracket and screws for mounting DSL on bracket	**A5E45882610**
• Lid with O-ring	**A5E45818351**
• Bag with parts: cable strain reliefs, screws and washers, lid lock screw, grounding parts	**A5E38111577**
• Accessory pipe mount kit for 60.3 mm (2.375 inch) pipe	**A5E36617118006**
• Accessory pipe strap kit for DN 50 ... 150 (2 ... 6 inch) pipe	**A5E36617118007**
• Accessory pipe strap kit for DN 150 ... 300 (6 ... 12 inch) pipe	**A5E36617118008**
• Accessory pipe strap kit for DN 300 ... 400(12 ... 16 inch) pipe	**A5E36617118009**
• Accessory pipe strap kit for DN 400 ... 600(16 ... 24 inch) pipe	**A5E36617118010**

© Siemens 2020

Selection and ordering data (continued)

Article No./Sensor Crossreference

Steel (T1)			Steel (T2)			Plastic (liquid)		
Data place 8,9,10 of 7ME372.-... combination	Sensor part number	Sensor Size Code	Data place 8,9,10 of 7ME372.-... combination	Sensor part number	Sensor Size Code	Data place 8,9,10 of 7ME372.-... combination	Sensor part number	Sensor Size Code
1BB	7ME3950-5LG01	A1HT1	**2BB**	7ME3950-5LB11	A1	**6BB**	7ME3950-5LB01	A2
1BC	7ME3950-5LH01	A2HT1	**2BC**	7ME3950-5LB01	A2	**6BC**	7ME3950-5LB01	A2
1BD	7ME3950-5LB11	A1	**2BD**	7ME3950-5LB11	A1	**6BD**	7ME3950-5LB01	A2
1BE	7ME3950-5LB01	A2	**2BE**	7ME3950-5LB01	A2	**6BE**	7ME3950-5LB01	A2
1BF	7ME3950-5LB11	A1	**2BF**	7ME3950-5LB11	A1	**6BF**	7ME3950-5LB01	A2
1CB	7ME3950-5LG01	A1HT1	**2CB**	7ME3950-5LB11	A1	**6CB**	7ME3950-5LB01	A2
1CC	7ME3950-5LH01	A2HT1	**2CC**	7ME3950-5LB01	A2	**6CC**	7ME3950-5LB01	A2
1CD	7ME3950-5LJ01	A3HT1	**2CD**	7ME3950-5LB11	A1	**6CD**	7ME3950-5LB01	A2
1CE	7ME3950-5GK01	B1HT1	**2CE**	7ME3950-5GK21	B1HT2	**6CE**	7ME3950-5LB01	A2
1CF	7ME3950-5LB11	A1	**2CF**	7ME3950-5LB11	A1	**6CF**	7ME3950-5LB01	A2
1CG	7ME3950-5LB11	A1	**2CG**	7ME3950-5LB11	A1	**6CG**	7ME3950-5LB01	A2
1DB	7ME3950-5LG01	A1HT1	**2DB**	7ME3950-5LC11	B1	**6DC**	7ME3950-5LC01	B3
1DC	7ME3950-5LH01	A2HT1	**2DC**	7ME3950-5LC21	B2	**6DD**	7ME3950-5LC01	B3
1DD	7ME3950-5LJ01	A3HT1	**2DD**	7ME3950-5LC11	B1	**6DE**	7ME3950-5LC01	B3
1DE	7ME3950-5GK01	B1HT1	**2DE**	7ME3950-5GK21	B1HT2	**6DF**	7ME3950-5LC01	B3
1DF	7ME3950-5GL01	B2HT1	**2DF**	7ME3950-5GL21	B2HT2	**6DG**	7ME3950-5LC01	B3
1DG	7ME3950-5LC01	B3	**2DG**	7ME3950-5LC01	B3	**6DH**	7ME3950-5LC01	B3
1DH	7ME3950-5LC21	B2	**2DH**	7ME3950-5LC21	B2	**6EC**	7ME3950-5LC01	B3
1EB	7ME3950-5LG01	A1HT1	**2EB**	7ME3950-5LC11	B1	**6ED**	7ME3950-5LC01	B3
1EC	7ME3950-5LH01	A2HT1	**2EC**	7ME3950-5LC21	B2	**6EE**	7ME3950-5LC01	B3
1ED	7ME3950-5LJ01	A3HT1	**2ED**	7ME3950-5LC11	B1	**6EF**	7ME3950-5LC01	B3
1EE	7ME3950-5GK01	B1HT1	**2EE**	7ME3950-5GK21	B1HT2	**6EG**	7ME3950-5LC01	B3
1EF	7ME3950-5GL01	B2HT1	**2EF**	7ME3950-5GL21	B2HT2	**6EH**	7ME3950-5LC01	B3
1EG	7ME3950-5GM00	C1HT1	**2EG**	7ME3950-5GM20	C1HT2	**6EJ**	7ME3950-5LC01	B3
1EH	7ME3950-5GN00	C2HT1	**2EH**	7ME3950-5GN20	C2HT2	**6EK**	7ME3950-5LC01	B3
1EJ	7ME3950-5LC01	B3	**2EJ**	7ME3950-5LC01	B3	**6FE**	7ME3950-5LD00	C3
1EK	7ME3950-5LC01	B3	**2EK**	7ME3950-5LC01	B3	**6FF**	7ME3950-5LD00	C3
1FC	7ME3950-5LH01	A2HT1	**2FC**	7ME3950-5LD10	C1	**6FG**	7ME3950-5LD00	C3
1FD	7ME3950-5LJ01	A3HT1	**2FD**	7ME3950-5LD10	C1	**6FH**	7ME3950-5LD00	C3
1FE	7ME3950-5GK01	B1HT1	**2FE**	7ME3950-5GK21	B1HT2	**6FJ**	7ME3950-5LD00	C3
1FF	7ME3950-5GL01	B2HT1	**2FF**	7ME3950-5GL21	B2HT2	**6FK**	7ME3950-5LD00	C3
1FG	7ME3950-5GM00	C1HT1	**2FG**	7ME3950-5GM20	C1HT2	**6GF**	7ME3950-5LD00	C3
1FH	7ME3950-5GN00	C2HT1	**2FH**	7ME3950-5GN20	C2HT2	**6GG**	7ME3950-5LD00	C3
1FJ	7ME3950-5GP00	D1HT1	**2FJ**	7ME3950-5GP20	D1HT2	**6GH**	7ME3950-5LD00	C3
1FK	7ME3950-5LD10	C1	**2FK**	7ME3950-5LD10	C1	**6GJ**	7ME3950-5LD00	C3
1GD	7ME3950-5LJ01	A3HT1	**2GD**	7ME3950-5LD10	C1	**6GK**	7ME3950-5LD00	C3
1GE	7ME3950-5GK01	B1HT1	**2GE**	7ME3950-5GK21	B1HT2	**6GL**	7ME3950-5LD00	C3
1GF	7ME3950-5GL01	B2HT1	**2GF**	7ME3950-5GL21	B2HT2	**6HG**	7ME3950-5LE00	D3
1GG	7ME3950-5GM00	C1HT1	**2GG**	7ME3950-5GM20	C1HT2	**6HH**	7ME3950-5LE00	D3
1GH	7ME3950-5GN00	C2HT1	**2GH**	7ME3950-5GN20	C2HT2	**6HJ**	7ME3950-5LE00	D3
1GJ	7ME3950-5GP00	D1HT1	**2GJ**	7ME3950-5GP20	D1HT2	**6HK**	7ME3950-5LE00	D3
1GK	7ME3950-5GQ00	D2HT1	**2GK**	7ME3950-5GQ20	D2HT2	**6HL**	7ME3950-5LE00	D3
1GL	7ME3950-5LD00	C3	**2GL**	7ME3950-5LD00	C3	**6HM**	7ME3950-5LE00	D3
1HE	7ME3950-5GK01	B1HT1	**2HE**	7ME3950-5GK21	B1HT2	**6JJ**	7ME3950-5LE00	D3
1HF	7ME3950-5GL01	B2HT1	**2HF**	7ME3950-5GL21	B2HT2	**6JK**	7ME3950-5LE00	D3
1HG	7ME3950-5GM00	C1HT1	**2HG**	7ME3950-5GM20	C1HT2	**6JL**	7ME3950-5LE00	D3
1HH	7ME3950-5GN00	C2HT1	**2HH**	7ME3950-5GN20	C2HT2	**6JM**	7ME3950-5LE00	D3
1HJ	7ME3950-5GP00	D1HT1	**2HJ**	7ME3950-5GP20	D1HT2	**6KK**	7ME3950-5LF00	E2
1HK	7ME3950-5GQ00	D2HT1	**2HK**	7ME3950-5GQ20	D2HT2	**6KL**	7ME3950-5LF00	E2
1HL	7ME3950-5GR00	D4HT1	**2HL**	7ME3950-5GR20	D4HT2	**6KM**	7ME3950-5LF00	E2
1JG	7ME3950-5GM00	C1HT1	**2JG**	7ME3950-5GM20	C1HT2	**6LM**	7ME3950-5LF00	E2
1JH	7ME3950-5GN00	C2HT1	**2JH**	7ME3950-5GN20	C2HT2			
1JJ	7ME3950-5GP00	D1HT1	**2JJ**	7ME3950-5GP20	D1HT2			
1JK	7ME3950-5GQ00	D2HT1	**2JK**	7ME3950-5GQ20	D2HT2			
1JL	7ME3950-5GR00	D4HT1	**2JL**	7ME3950-5GR20	D4HT2			
1KH	7ME3950-5GN00	C2HT1	**2KH**	7ME3950-5GN20	C2HT2			
1KJ	7ME3950-5GP00	D1HT1	**2KJ**	7ME3950-5GP20	D1HT2			
1KK	7ME3950-5GQ00	D2HT1	**2KK**	7ME3950-5GQ20	D2HT2			
1KL	7ME3950-5GR00	D4HT1	**2KL**	7ME3950-5GR20	D4HT2			
1LJ	7ME3950-5GP00	D1HT1	**2LJ**	7ME3950-5GP20	D1HT2			
1LK	7ME3950-5GQ00	D2HT1	**2LK**	7ME3950-5GQ20	D2HT2			
1LL	7ME3950-5GR00	D4HT1	**2LL**	7ME3950-5GR20	D4HT2			

© Siemens 2020

Selection and ordering data (continued)

Other (Univ)			Other (VH)		
Data place 8,9,10 of 7ME372.-... combination	Sensor part number	Sensor Size Code	Data place 8,9,10 of 7ME372.-... combination	Sensor part number	Sensor Size Code
7BB	7ME3950-5LB01	A2	**8BB**	7ME3950-5LA13	1
7BC	7ME3950-5LB01	A2	**8BC**	7ME3950-5LA13	1
7BD	7ME3950-5LB01	A2	**8BD**	7ME3950-5LA13	1
7BE	7ME3950-5LB01	A2	**8BE**	7ME3950-5LA13	1
7BF	7ME3950-5LB01	A2	**8BF**	7ME3950-5LA13	1
7CB	7ME3950-5LB01	A2	**8CB**	7ME3950-5LA13	1
7CC	7ME3950-5LB01	A2	**8CC**	7ME3950-5LA13	1
7CD	7ME3950-5LB01	A2	**8CD**	7ME3950-5LA13	1
7CE	7ME3950-5LB01	A2	**8CE**	7ME3950-5LA13	1
7CF	7ME3950-5LB01	A2	**8CF**	7ME3950-5LA13	1
7CG	7ME3950-5LB01	A2	**8CG**	7ME3950-5LA13	1
7DB	7ME3950-5LC01	B3	**8DB**	7ME3950-5LA13	1
7DC	7ME3950-5LC01	B3	**8DC**	7ME3950-5LA13	1
7DD	7ME3950-5LC01	B3	**8DD**	7ME3950-5LA13	1
7DE	7ME3950-5LC01	B3	**8DE**	7ME3950-5LA13	1
7DF	7ME3950-5LC01	B3	**8DF**	7ME3950-5LA13	1
7DG	7ME3950-5LC01	B3	**8DG**	7ME3950-5LA13	1
7DH	7ME3950-5LC01	B3	**8DH**	7ME3950-5LA13	1
7EB	7ME3950-5LC01	B3	**8EB**	7ME3950-5LA13	1
7EC	7ME3950-5LC01	B3	**8EC**	7ME3950-5LA13	1
7ED	7ME3950-5LC01	B3	**8ED**	7ME3950-5LA13	1
7EE	7ME3950-5LC01	B3	**8EE**	7ME3950-5LA13	1
7EF	7ME3950-5LC01	B3	**8EF**	7ME3950-5LA13	1
7EG	7ME3950-5LC01	B3	**8EG**	7ME3950-5LA13	1
7EH	7ME3950-5LC01	B3	**8EH**	7ME3950-5LA13	1
7EJ	7ME3950-5LC01	B3	**8EJ**	7ME3950-5LA13	1
7EK	7ME3950-5LC01	B3	**8EK**	7ME3950-5LA13	1
7FC	7ME3950-5LD00	C3	**8FC**	7ME3950-5LA23	2
7FD	7ME3950-5LD00	C3	**8FD**	7ME3950-5LA23	2
7FE	7ME3950-5LD00	C3	**8FE**	7ME3950-5LA23	2
7FF	7ME3950-5LD00	C3	**8FF**	7ME3950-5LA23	2
7FG	7ME3950-5LD00	C3	**8FG**	7ME3950-5LA23	2
7FH	7ME3950-5LD00	C3	**8FH**	7ME3950-5LA23	2
7FJ	7ME3950-5LD00	C3	**8FJ**	7ME3950-5LA23	2
7FK	7ME3950-5LD00	C3	**8FK**	7ME3950-5LA23	2
7GD	7ME3950-5LD00	C3	**8GD**	7ME3950-5LA23	2
7GE	7ME3950-5LD00	C3	**8GE**	7ME3950-5LA23	2
7GF	7ME3950-5LD00	C3	**8GF**	7ME3950-5LA23	2
7GG	7ME3950-5LD00	C3	**8GG**	7ME3950-5LA23	2
7GH	7ME3950-5LD00	C3	**8GH**	7ME3950-5LA23	2
7GJ	7ME3950-5LD00	C3	**8GJ**	7ME3950-5LA23	2
7GK	7ME3950-5LD00	C3	**8GK**	7ME3950-5LA23	2
7GL	7ME3950-5LD00	C3	**8GL**	7ME3950-5LA23	2
7HE	7ME3950-5LE00	D3	**8HE**	7ME3950-5LA43	3
7HF	7ME3950-5LE00	D3	**8HF**	7ME3950-5LA43	3
7HG	7ME3950-5LE00	D3	**8HG**	7ME3950-5LA43	3
7HH	7ME3950-5LE00	D3	**8HH**	7ME3950-5LA43	3
7HJ	7ME3950-5LE00	D3	**8HJ**	7ME3950-5LA43	3
7HK	7ME3950-5LE00	D3	**8HK**	7ME3950-5LA43	3
7HL	7ME3950-5LE00	D3	**8HL**	7ME3950-5LA43	3
7HM	7ME3950-5LE00	D3	**8HM**	7ME3950-5LA43	3
7JG	7ME3950-5LE00	D3	**8JG**	7ME3950-5LA43	3
7JH	7ME3950-5LE00	D3	**8JH**	7ME3950-5LA43	3
7JJ	7ME3950-5LE00	D3	**8JJ**	7ME3950-5LA43	3
7JK	7ME3950-5LE00	D3	**8JK**	7ME3950-5LA43	3
7JL	7ME3950-5LE00	D3	**8JL**	7ME3950-5LA43	3
7JM	7ME3950-5LE00	D3	**8JM**	7ME3950-5LA43	3
7KH	7ME3950-5LF00	E2	**8KH**	7ME3950-5LA73	4
7KJ	7ME3950-5LF00	E2	**8KJ**	7ME3950-5LA73	4
7KK	7ME3950-5LF00	E2	**8KK**	7ME3950-5LA73	4
7KL	7ME3950-5LF00	E2	**8KL**	7ME3950-5LA73	4
7KM	7ME3950-5LF00	E2	**8KM**	7ME3950-5LA73	4
7LJ	7ME3950-5LF00	E2	**8LJ**	7ME3950-5LA73	4
7LK	7ME3950-5LF00	E2	**8LK**	7ME3950-5LA73	4
7LL	7ME3950-5LF00	E2	**8LL**	7ME3950-5LA73	4
7LM	7ME3950-5LF00	E2	**8LM**	7ME3950-5LA73	4

© Siemens 2020

Selection and ordering data

	Article No.
Spare parts (system)	
SITRANS FS230 ↗ IP65/IP66 (Nema 4X)	**7ME3950-■■■■■**
↗ Click on the Article No. for the online configuration in the PIA Life Cycle Portal.	
Approvals	
All, FM/FMc, ATEX, IECEX - Flow sensors	5
All, FM/FMc, ATEX, IECEX - Temperature sensors	1
Spare sensor code	
For liquid flow sensors pipe ranges please refer to catalog sensor selection chart in the FSS200 section	
Flow sensors for use with mounting frames or tracks Suitable for pipes other than steel or stainless steel.	
Temperature -40 ... +121 °C (-40 ... +250 °F)	
• A1 Universal	5 L B 1 1
• A2 Universal	5 L B 0 1
• B1 Universal	5 L C 1 1
• B2 Universal	5 L C 2 1
• B3 Universal	5 L C 0 1
• C1 Universal	5 L D 1 0
• C2 Universal	5 L D 2 0
• C3 Universal	5 L D 0 0
• D1 Universal	5 L E 1 0
• D2 Universal	5 L E 2 0
• D3 Universal	5 L E 0 0
• E1 Universal	5 L F 1 0
• E2 Universal	5 L F 0 0
• E3 Universal	5 L F 2 0
Gas and liquid sensors for use with mounting frames or tracks Suitable for steel or stainless steel pipes	
Temperature T1	
• A1H high precision	5 L G 0 1
• A2H high precision	5 L H 0 1
• A3H high precision	5 L J 0 1
• B1H high precision	5 G K 0 1
• B2H high precision	5 G L 0 1
• B3H high precision	5 G t 0 1
• C1H high precision	5 G M 0 0
• C2H high precision	5 G N 0 0
• D1H high precision	5 G P 0 0
• D2H high precision	5 G Q 0 0
• D3H high precision	5 G U 0 0
• D4H high precision	5 G R 0 0

	Article No.
Spare parts (system)	
SITRANS FS230 IP65/IP66 (Nema 4X)	**7ME3950-■■■■■**
Temperature T2	
• A1H high precision	5 L G 2 1
• A2H high precision	5 L H 2 1
• A3H high precision	5 L J 2 1
• B1H high precision	5 G K 2 1
• B2H high precision	5 G L 2 1
• B3H high precision	5 G t 2 1
• C1H high precision	5 G M 2 0
• C2H high precision	5 G N 2 0
• D1H high precision	5 G P 2 0
• D2H high precision	5 G Q 2 0
• D3H high precision	5 G U 2 0
• D4H high precision	5 G R 2 0
High temperature universal liquid sensors	
Very high temperature up to 230 °C (446 °F)	
• Size 1 (Ø 12.7 ... 100 mm (0.47 ... 3.94"))	5 L A 1 3
• Size 2 (Ø 30 ... 200 mm (1.18 ... 7.87"))	5 L A 2 3
• Size 2A (Ø 30 ... 200 mm (1.18 ... 7.87"))	5 L A 3 3
• Size 3 (Ø 150 ... 610 mm (5.9 ... 24.0"))	5 L A 4 3
• Size 3A (Ø 150 ... 610 mm (5.9 ... 24.0"))	5 L A 6 3
• Size 4 (Ø 400 ... 1200 mm (16.75 ... 47.24"))	5 L A 7 3
• Size 4A (Ø 400 ... 1200 mm (16.75 ... 47.24"))	5 L A 8 3
Standard RTD temperature sensors	
Standard clamp-on RTD	1 T A 0 0
Submersible clamp-on RTD	1 T B 0 0
Insertion style RTD (size 1), 140 mm (5.5")	1 T J 0 0
Insertion style RTD (size 2), 216 mm (8.5")	1 T J 0 1
Insertion style RTD (size 3), 292 mm (11.5")	1 T J 0 2
Insertion style RTD (size 4), 368 mm (14.5")	1 T J 0 3

© Siemens 2020

Selection and ordering data for SITRANS FS230

3

Selection and ordering data	Article No.
Spare parts (Miscellaneous)	
SITRANS F S Clamp-on ↗	**7ME3960-■■■■■**
↗ Click on the Article No. for the online configuration in the PIA Life Cycle Portal.	
FS230 dedicated sensor mounting hardware	
Sensor mounting frames for	
• Universal sensor size B (for pipes > 125 mm (5 inch)	**CQO:1012FN-PB**
• Universal sensor size C	**0 M C 0 0**
• Universal sensor size D	**0 M C 0 1**
• Universal sensor size E	**0 M C 0 1**
• High precision sensor size B (For pipes > 125 mm (5 inch)	**CQO:1012FNH-PB**
• High precision sensor size C	**0 M D 0 0**
• High precision sensor size D	**0 M D 0 1**
• Magnetic mounting frames for size C, D, E, universal and high precision sensors	**0 M D 0 2**
Spacer bars (for indexing sensors on pipe)	
Spacer bar for pipes to 200 mm/8 inch (liquid), 600 mm/24 inch (gas)	**0 M S 1 0**
Spacer bar for pipes to 500 mm/20 inch (liquid), DN 1200/48 inch (gas)	**0 M S 2 0**
Spacer bar for pipes to 800 mm/32 inch (liquid)	**0 M S 3 0**
Spacer bar for pipes to 1200 mm/48 inch (liquid). Must be used with 7ME39600SM30	**0 M S 4 0**
Mounting straps (slotted stainless steel)	
For pipes	
DN 50 ... DN 150	**0 S M 0 0**
DN 50 ... DN 300	**0 S M 1 0**
DN 300 ... DN 600	**0 S M 2 0**
DN 600 ... DN 1200	**0 S M 3 0**
DN 1200 ... DN 1500	**0 S M 4 0**
DN 1500 ... DN 2100	**0 S M 5 0**
DN 2100 ... DN 3000	**0 S M 6 0**
High precision mounting enclosures for sensors	
Stainless steel mounts for high precision size "C" sensors, single enclosure	**0 W S 5 0**
Stainless steel mounts for high precision size "D/E" sensors, single enclosure	**0 W S 6 0**
Stainless steel mounts for high precision size "C" sensors, dual enclosure	**0 W D 5 0**
Stainless steel mounts for high precision size "D/E" sensors, dual enclosure	**0 W D 6 0**
Stainless steel bands for high precision mounting enclosures	
Mounting strap for pipe diameter to	
• 300 mm (13")	**0 S M 0 1**
• 600 mm (24")	**0 S M 1 1**
• 1200 mm (48")	**0 S M 2 1**
• 1500 mm (60")	**0 S M 3 1**
• 2130 mm (84")	**0 S M 4 1**
• 3050 mm (120")	**0 S M 5 1**
• 5486 mm (216")	**0 S M 6 1**
ADAPTER, MTG STRAP, TEMP COMP	**CQO-1012WSM-A2**

	Article No.
Spare parts (Miscellaneous)	
SITRANS F S Clamp-on	**7ME3960-■■■■■**
Sensor mounting tracks (aluminum with mounting straps) for pipes < 125 mm (5 inch)	
Universal sensor size A or B	**0 M A 0 0**
High precision sensor size A or B	**0 M B 0 0**
Stainless mounting tracks for high temperature 991 sensors	
Size 1 high temperature sensor pair	**CQO: 992MTNHMSH-1**
Size 2 high temperature sensor pair	**CQO: 992MTNHMSH-2**
Size 3 high temperature sensor pair	**CQO: 992MTNHMSH-3**
Size 4 high temperature sensor pair	**CQO: 992MTNHMSH-4**
Clamp-on RTD mounting hardware for dedicated systems	
RTD mounting hardware for dedicated system	
• 1152 ... 610 mm (6 ... 24")	**0 M R 0 0**
• 12.7 ... 50.8 mm (0.5 ... 2")	**0 M R 0 1**
• 31.8 ... 203.2 mm (1.25 ... 8")	**0 M R 0 2**
• 508 ... 1219 mm (20 ... 48")	**0 M R 0 4**
Junction box for clamp on RTD's	**CQO:992ECJ**
Insert RTD thermowells	
Thermowell standard duty	
• Uninsulated pipe 140 mm (5.5")	**CQO:1012TW-1**
• Uninsulated pipe 216 mm (8.5")	**CQO:1012TW-2**
• Uninsulated pipe: 292 mm (11.5")	**CQO:1012TW-3**
• With lagging 140 mm (5.5")	**CQO:1012TW-1L**
• With lagging 216 mm (8.5")	**CQO:1012TW-2L**
• With lagging 292 mm (11.5")	**CQO:1012TW-3L**
Sensor cables	
Coax (CE mark)	
• 10 m (32.8 ft) armored sensor cable pair with nickel plated brass glands	**A5E38028474004**
• 20 m (65.6 ft) armored sensor cable pair with nickel plated brass glands	**A5E38028474005**
• 10 m (32.8 ft) standard/submersible Coax sensor cable pair with Nylon glands	**A5E39669934004**
• 20 m (65.6 ft) standard/submersible Coax sensor cable pair with Nylon glands	**A5E39669934005**
• 10 m (32.8 ft) standard/submersible Coax sensor cable pair with nickel plated brass glands	**A5E39669934009**
• 20 m (65.6 ft) standard/submersible Coax sensor cable pair with nickel plated brass glands	**A5E39669934010**
• 10 m (32.8 ft) standard/submersible Coax sensor cable pair with stainless steel glands	**A5E39669934014**
• 20 m (65.6 ft) standard/submersible Coax sensor cable pair with stainless steel glands	**A5E39669934015**
• 20 m (65.6 ft) plenum rated Coax sensor cable pair with Nylon glands	**A5E39669934020**
• 20 m (65.6 ft) plenum rated Coax sensor cable pair with nickel plated brass glands	**A5E39669934025**
• 20 m (65.6 ft) plenum rated Coax sensor cable pair with stainless steel glands	**A5E39669934030**

© Siemens 2020

Selection and ordering data

	Article No.
Spare parts (Miscellaneous)	
SITRANS F S Clamp-on	**7ME3960-■■■■■**
Cable glands and adapters	
Cable gland set M20, nylon	**A5E38145321**
Cable gland set M20, nickel/brass	**A5E38145323**
Cable gland set M20, stainless steel	**A5E38145327**
Iris glands, set of 2, nickel plated brass	**A5E38635890**
Iris glands, set of 2, stainless steel	**A5E38635986**
M20xNPT adapters, set of 8, brass/nickel	**A5E38145635**
M20xNPT adapters, set of 8, brass/nickel, Ex	**A5E38309159**
M20xNPT adapters, set of 8, stainless steel	**A5E38145643**
RTD temperature sensor cables	
6 m (20 ft) standard RTD cable	**0 C R 5 0**
15 m (50 ft) standard RTD cable	**0 C R 5 1**
30 m (100 ft) standard RTD cable	**0 C R 5 2**
46 m (150 ft) standard RTD cable	**0 C R 5 3**
61 m (200 ft) standard RTD cable	**0 C R 5 4**
91 m (300 ft) standard RTD cable	**0 C R 5 5**
6 m (20 ft) submersible RTD cable	**0 C R 5 6**
15 m (50 ft) submersible RTD cable	**0 C R 5 7**
30 m (100 ft) submersible RTD cable	**0 C R 5 8**
46 m (150 ft) submersible RTD cable	**0 C R 5 9**
61 m (200 ft) submersible RTD cable	**0 C R 6 0**
91 m (300 ft) submersible RTD cable	**0 C R 6 1**
Dedicated cable termination kits for:	
Standard, plenum sensor cable (Nema 4X and Nema 7 wall)	**0 C t 0 1**
Submersible sensor cable (Nema 4X and Nema 7 wall)	**0 C t 1 1**
Clamp-on RTD cable termination kit for standard RTD	**0 C t 2 1**
Clamp-on RTD cable termination kit for submersible RTD	**0 C t 3 1**
Insert RTD cable termination kit	**0 C t 4 1**
Termination kit for armored cable	**CQO:1012CNFX-TK**
Ultrasonic couplants	
Temporary water based for portable systems: 350 ml (12 oz): -34 ... +38 °C (-30 ... +100 °F)	**0 U C 1 0**
Permanent synthetic polymer based: 90 ml (3 oz) -40 ... +190 °C (-40 ... +375 °F)	**0 U C 2 0**
Permanent high temperature fluoroether: 163 ml (5.5 oz): -40 ... +230 °C (-40 ... +450 °F)	**0 U C 3 2**
Dry coupling pad kit (10 pieces)	**0 U C 4 0**
Permanent vulcanizing silicone rubber couplant: 90 ml (3 oz): -40…+120C (-40…+250 °F)	**CQO:CC112**
Permanent high temperature silicone grease: 12 ml (0.4 oz): -40 ... +230 °C (-40 ... +450 °F)	**CQO:CC117B**
Permanent high temperature silicone grease: 150 ml (5 oz): -40 ... +230 °C (-40 ... +450 °F)	**CQO:CC117A**
Couplant for submersible sensor applications	**CQO:CC120**

	Article No.
Spare parts (Miscellaneous)	
SITRANS F S Clamp-on	**7ME3960-■■■■■**
Pipe damping films	
B1, B2, B3, C1 and C2 sensors	**0 D M 1 0**
D1 and D3 sensors	**0 D M 2 0**
D2 sensor	**0 D M 3 0**
D4 sensor	**0 D M 4 0**
Universal sensor test blocks	
Test block for size A and B universal sensors	**0 T B 1 0**
Test block for size C and D universal sensors	**0 T B 2 0**
Thickness gauge	
Stand alone thickness gauge	**7ME39510TG20**
Cable, DSL to wallbox transmitter	
5 m (16.4 ft) standard DSL cable (2 mounted M12 plugs)	**A5E**
5 m (16.4 ft) standard DSL cable (no plugs mounted)	**A5E**
10 m (32.8 ft) standard DSL cable (2 mounted M12 plugs)	**A5E**
10 m (32.8 ft) standard DSL cable (no plugs mounted)	**A5E**
25 m (82 ft) standard DSL cable (2 mounted plugs)	**A5E**
25 m (82 ft) standard DSL cable (no plugs mounted)	**A5E**
50 m (164 ft) standard DSL cable (2 mounted plugs)	**A5E**
50 m (164 ft) standard DSL cable (no plugs mounted)	**A5E**
75 m (246.1 ft) standard DSL cable (2 mounted plugs)	**A5E**
75 m (246.1 ft) standard DSL cable (no plugs mounted)	**A5E**
150 m (492.1 ft) standard DSL cable (2 mounted plugs)	**A5E**
150 m (492.1 ft) standard DSL cable (no plugs mounted)	**A5E**

© Siemens 2020

SITRANS FS220 ultrasonic flowmeter

Overview

The SITRANS FS220 is a clamp-on ultrasonic flow system consisting of an FST020 transmitter and FSS200 clamp-on sensors.

The transmitter classification FST020 describes a basic clamp-on ultrasonic flowmeter for basic application requirements. Based on the same digitalized platform as the FST030 this system provides the same accuracy and similar functions on a lower cost level. This system is ideal for water measurement and any application not requiring temperature or viscosity compensation.

Benefits

- Easy installation at any time; no production stop, no need to cut pipe or stop flow
- Minimal maintenance; external sensors do not require periodic cleaning
- No moving parts to foul or wear. No contact with media
- No pressure drop or energy loss
- Wide turn-down ratio, bidirectional and high stability at zero flow conditions
- Anomaly compensation tool for correction of non-ideal straight pipe runs. Automatic compensation during backflow
- Optional WideBeam technology ensures highest performance and accuracy
- Compatible with all previously installed transit time sensors

Application

The SITRANS FS220 can be used for the following application conditions:

- Pipe sizes from 10 mm to 10 m
- Pipe materials: ideal for all metals, glass, FRP and most PVC variants; NOT for concrete pipes and special compound pipes
- Pipe wall thickness from 1 to 35 mm; specials on request up to 65 mm
- Media temperatures from -40 to 121 °C; universal high temperature sensors for up to 230 °C max.
- Underground/submerged locations, non-ideal environments, strong pipe vibrations

SITRANS FS220 flowmeters are suitable for most clean liquid applications, including the following:

- Water and wastewater industry
  - Potable water
  - Water and aqueous solutions
  - Wastewater, influent & effluent
  - Processed sewage, sludge
- Chemical feed industry
  - Sodium hypochlorite
  - Sodium hydroxide
- HVAC and power industries
  - Coolant flow
  - Fuel flow
  - Utility district heating, cooling
  - Refrigeration liquids
- Process control
  - Chemicals
  - Pharmaceuticals
  - Food products
  - Very low flow sensitiity (< 0.1 m/s)
  - High temperature liquids > 120 °C (248 °F)

© Siemens 2020

Application (continued)

Sensor type selection guide

Application condition Note all that apply before making selection	Standard sensor supported in MLFB **High precision**	 **Universal**	Notes
Media			
General survey (clean liquids) on non-steel pipes		**X**	
General survey (clean liquids) on a limited range of steel pipes	**X**		
Moderately aerated liquid or slurry, up to 121 °C (250 °F)	**X**		
Permanent installation on steel pipe (clean liquids)	**X**		
Installation in offshore or corrosive environment	**X**		With optional stainless steel mounting
Liquid temperature greater than 120 °C (248 °F)	**O**	**X**	High temperature metal block sensors (up to 230 °C (446 °F))
Operation on single pipeline flowing multiple products	**X**	**O**	
Pipe material			
Steel	**X**		
Steel pipe with diameter/wall thickness ratio < 10	**O**	**X**	
Non-steel pipe material (copper, ductile iron, cast iron, etc.)	**O**	**X**	High precision sensors can also be used on plastic and aluminum pipes in special cases

O = not suitable X = preferred choice

Definitions

Sensor chart	Description
FSS200	Formerly 1011 clamp-on sensors of the 1010 systems
Standard	Standard system sensor, selectable as part of a configured product
Special	Sensors available for non-standard applications and pipes. Contact tech support for application use
Corrosions resistant	Stainless steel metal parts on all Size C, D and E and all high temperature sensors
Aluminum	Aluminum metal parts on all HP and Universal size A and B (Corrosion resistant on request for size B)
Spare	Not available as part of a configured product, must be ordered separately
CE	Transmitter and sensors certified for sale in the EU
Trackless mount	Sensors fixed only by straps, no other mounting (spacer bar as an option) - not recommended
Tracks	Permanent installation for universal size A/B, high precision size A/B and all sizes of high temperature. Tracks always come as dual-part for either direct or reflect mounting, and always with straps.
Frames	Three sizes, for permanent installation for universal size C/ D/ E, and for high precision size C/D. For universal and high precision size B available for pipes > 125 OD (Spare)
T1	Usable from -40 ... +120 °C (-40 ... +248 °F), but best for Ø temperature below 80 °C (< 176 °F); standard
T2	Usable from -40 ... +120 °C (-40 ... +248 °F), but best for Ø temperature above 80 °C (< 176 °F)
Submersible	Sensors can be used submerged; adding Denso for supplemental protection is recommended

© Siemens 2020

Application (continued)

Sensor Availability Guide

Sensor models	Availability									
	Standard	Spare only	Corrosion resistant	Trackless	Tracks	Frames	T1 best use below 80 °C (176 °F)	T2 best use 80 ... 120 °C (176 ... 248 °F)	Submersible	Catalog
Universal Sensor -40 … 120 °C housing CE IP68										
A1 Universal for pipe OD – 5.8 … 50.8 mm (0.23" … 2")		X			X				X	
A2 Universal for pipe OD – 12.7 … 50.8 mm (0.5" … 2")	X				X				X	X
B1 Universal for pipe OD – 12.7 … 76 mm (0.5" … 3")		X			X	X			X	
B2 Universal for pipe OD – 12.7 … 76 mm (0.5" … 3")		X			X	X			X	
B3 Universal for pipe OD – 19 … 127 mm (0.75" … 5")	X				X	X			X	X
C1 Universal for pipe OD – 51 … 254 mm (2" … 10")		X	X	X		X			X	
C2 Universal for pipe OD – 51 … 254 mm (2" … 10")		X	X	X		X			X	
C3 Universal for pipe OD – 51 … 305 mm (2" … 12")	X		X	X		X			X	X
D1 Universal for pipe OD – 102 … 508 mm (4" … 20")		X	X	X		X			X	
D2 Universal for pipe OD – 152 … 610 mm (6" … 24")		X	X	X		X			X	
D3 Universal for pipe OD – 203 … 610 mm (8" … 24")	X		X	X		X			X	X
*E1 Universal for pipe OD – 254 … 3048 mm (10" … 120")		X	X	X		X			X	
*E2 Universal for pipe OD – 254 … 6096 mm (10" … 240")	X		X	X		X			X	X
*E3 Universal for pipe OD – 304 … 10007 mm (12" … 394")		X	X	X		X			X	
High Precision Sensor -40 … 120 °C (-40 ... +248 °F) T1 (T2) CE IP68										
A1H (High Precision) for pipe WT - 0.64 ... 1.0 mm (0.025" ... 0.04")		X			X		X		X	X
A2H (High Precision) for pipe WT - 1.0 ... 1.5 mm (0.04" ... 0.06")	X				X		X		X	X
A3H (High Precision) for pipe WT - 1.5 ... 2.0 mm (0.06" ... 0.08")	X				X		X		X	X
B1H (High Precision) for pipe WT - 2.0 ... 3.0 mm (0.08" ... 0.12")	X				X	X	X	X	X	X
B2H (High Precision) for pipe WT - 3.0 ... 4.1 mm (0.12" ... 0.16")	X				X	X	X	X	X	X
B3H (High Precision) for pipe WT - 2.7 ... 3.3 mm (0.106" ... 0.128")		X			X	X	X	X	X	X
C1H (High Precision) for pipe WT - 4.1 ... 5.8 mm (0.16" ... 0.23")	X		X	X		X	X	X	X	X
C2H (High Precision) for pipe WT - 5.8 ... 8.1 mm (0..23" ... 0.32")	X		X	X		X	X	X	X	X
* D1H (High Precision) for pipe WT - 8.1 ... 11.2 mm (0..32" ... 0.44")	X		X	X		X	X	X	X	X
* D2H (High Precision) for pipe WT - 11.2 ... 15.7 mm (0.44" ... 0.62")	X		X	X		X	X	X	X	X
* D3H (High Precision) for pipe WT - 7.4 ... 9.0 mm (0..293" ... 0.354")		X	X	X		X	X	X	X	X
* D4H (High Precision) for pipe WT - 15.7 ... 31.8 mm (0..62" ... 1.25")	X		X	X		X	X	X	X	X
High Temperature Universal Sensor -40 ... +230 °C (-40 ... +446 °F)										
High Temperature size 1 ... 230 °C (Ø 12.7 ... 100 mm)		X	X		X				X[1)]	
High Temperature size 2 ... 230 °C (Ø 30 ... 200 mm)	X		X		X				X	X
High Temperature size 3 ... 230 °C (Ø 150 ... 610 mm)	X		X		X				X	X
High Temperature size 4 ... 230 °C (Ø 400 ... 1200 mm)	X		X		X				X	X
High Temperature size 2A ... 230 °C (Ø 30 ... 200 mm)		X	X		X				X[1)]	
High Temperature size 3A ... 230 °C (Ø 150 ... 610 mm)		X	X		X				X[1)]	
High Temperature size 4A ... 230 °C (Ø 400 ... 1200 mm)		X	X		X				X[1)]	

© Siemens 2020

Application (continued)

Sensor mounting availability guide

	Sensor (Dedicated)		
	Universal	**High precision**	**High temperature universal**
Mounting			
Trackless (straps only)	X	X	
Tracks universal dedicated	X		
Tracks HP dedicated		X	
Frames universal dedicated	X		
Frames HP dedicated		X	
Tracks high temperature universal			X
High precision mounting single enclosure for one pair sensors		X	
High precision mounting dual enclosure for one pair sensors		X	
SpacerBar	X	X	
Straps	X	X	X
Denso	X	X	

Function

Operating principle

The SITRANS F S system is a transit-time ultrasonic meter that provides exceptional performance using a non-intrusive clamp-on approach. Ultrasonic sensors transmit and receive acoustic signals directly though the existing pipe wall, where the fluid refraction angle is governed by Snell's law of refraction.

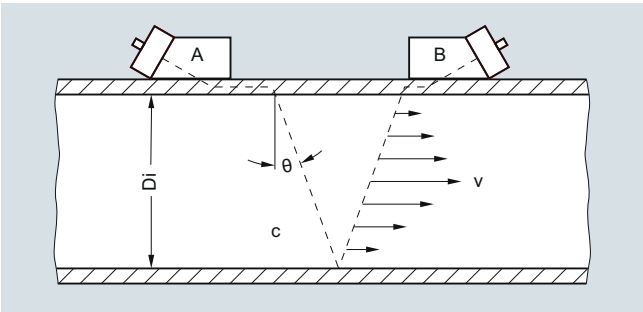

Clamp-on sensor mounted in a reflect configuration

The beam refraction angle is calculated as follows:

$\sin \theta = c / V_\varphi$

c = Velocity of sound in fluid

V_φ = Phase velocity (a constant in the pipe wall)

The flowmeter automatically compensates for any change in fluid sound velocity (or beam angle) in response to variations in the average transit time between sensors A and B. By subtracting the computed fixed times (within the sensor and pipe wall) from the measured average transit time, the meter can then infer the required transit time in the fluid (T_{Fluid}).

The sound waves traveling in the same direction as the flow ($T_{A,B}$) arrive earlier than sound waves traveling against the direction of flow ($T_{B,A}$). This time difference (Δt) is used to compute the line integrated flow velocity (v) as shown in the equation below:

$v = V_\varphi / 2 \cdot \Delta t / T_{Fluid}$

Once the raw flow velocity is determined, the fluid Reynolds Number (Re) must be determined to properly correct for fully developed flow profile. This requires the entry of the fluid's kinematic viscosity (visc) as shown in the equations below, where Q represents the final flow profile compensated volumetric flow rate.

$Re = Di \cdot v / visc \quad Q = K(Re) \cdot (\pi / 4 \cdot Di^2) \cdot v$

v = Flow velocity

$visc = \mu / \rho$ = (dynamic viscosity / density)

K(Re) = Reynolds flow profile compensation

In wetted type ultrasonic flowmeters the meter constants are configured prior to leaving the factory. As this is not possible with clamp-on meters, the settings must be made by the customer at the time of installation. These settings include pipe diameter, wall thickness, liquid viscosity, etc.

SITRANS clamp-on flowmeters that include temperature sensing can be configured to dynamically infer changes in fluid viscosity for the purpose of computing the most accurate flow profile compensation (K_{Re}).

Ultrasonic sensor types

Two basic types of clamp-on sensors can be selected for use with the SITRANS F S flowmeter. The lower cost "universal" sensor is the most common type in the industry and is suitable for most single liquid applications where the sound velocity does not vary much. This sensor type can be used on any sonically conductive pipe material (including steel) making it well suited for temporary survey applications. Universal sensors are selected based on the pipe diameter range alone, so wall thickness is less important to the selection process..

The second sensor type is the patented "WideBeam" sensor (called high precision), which utilizes the pipe wall as a kind of waveguide to optimize the signal to noise ratio and provide a wider area of vibration. This makes this kind of sensor less sensitive to any change in the fluid medium.

The WideBeam sensor is designed for steel pipes, but can also be used with aluminum and titanium. It is the preferred sensor for HPI applications. Note that unlike the universal type, this sensor selection is dependent only on the pipe's wall thickness.

© Siemens 2020

Function (continued)

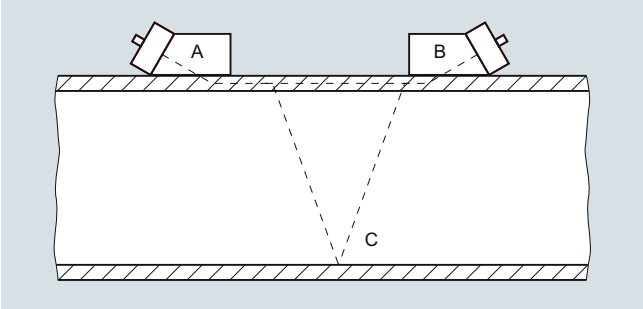

General installation guidelines for SITRANS FSS200 clamp-on sensor

- Minimum measuring range: 0 to ± 0.3 m/s velocity (see meter accuracy graph on next page for more detail)
- Maximum measuring range: 0 to ± 12 m/s (± 30 m/s for high precision sensors). Final flow range determination requires application review

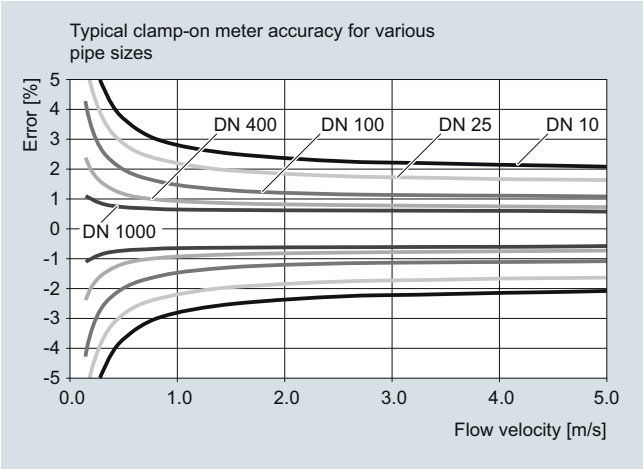

- Pipe must be completely full within the sensor installation volume for accurate flow measurement
- Typical MINIMUM straight pipe requirements are: 10 Diameters upstream/5 Diameters downstream. Additional straight run is required for double out-of-plane elbows and partially open valves.
- Sensors should be installed at least 20° off vertical for horizontal pipes. This reduces the chance of beam interference from gas buildup at the top of the pipe
- Operation inside the Reynolds transition region, between 1000 < Re < 5000 should be avoided for best accuracy
- Submersible and direct burial installations can be accommodated. Consult sales representative for details
- Ultrasonic coupling compound is provided with all sensor orders. Insure that a permanent coupling compound is used for long term installations
- Refer to the "Sensor type selection guide" to insure proper application of the equipment

Technical specifications

Rangeability	
Flow range	±12 m/s (±40 ft/s), depending on pipe size higher or lower
Flow direction	bi-diretional
Flow sensitivity	0.001 m/s (0.003 ft/s) flow rate independent
Digital inputs	
Totalizer Hold	Optically isolated diode Activated On: Input voltage: 2 ... 10 V DC
Totalizer Reset	Optically isolated diode Activated On: Input voltage: 2 ... 10 V DC
Output Channel 1	
Current	4 ... 20 mA (isolated) Externally powered 10 ... 30 V DC
Relay	30 V DC, 3 V AC max. Pulse: 41.6 ms ... 5 s pulse duration Frequency: 0 ... 12.5 kHz (50 % duty cylce)
Pulse rate	Optically isolated transistor 10 mA, 30 V DC max.
Accuracy	For velocities above 0.3 m/s (1 ft/s), ±1.0 % of flow
Repeatability	± 0.25 % (according to ISO 11631)
Zero Drift	0.1 % of rate; < ±0.001 m/s (±0.003 ft/s)
Data refresh rate	100 Hz
Transmitter conditions	
Operating temperature	-10 … +50 °C (14 … 122 °F)
Storage temperature	-20 … +60 °C (-4 … +140 °F)
Degree of protection	IP65, NEMA 4X
Design	
Weight	1.4 kg (3.0 lb)
Dimensions (W x H x D)	176 x 240 x 87 mm (6.9 x 9.5 x 3.4 inch)
Enclosure material	Polycarbonate
Power supply	100 ... 240 V AC @ 20 VA or 11.5 ... 28.5 V DC @ 10 W
Certificates and approvals	
Unclassified locations	
• General Safety	UL, cUL, CE

© Siemens 2020

Selection and ordering data

	Article No.
Spare parts (FSS200 sensors)	
SITRANS F US clamp-on	**7ME3950-5 ■ ■ ■ ■**
Temperature range for all sensors is unless otherwise noted -40 °C ... +120 °C (-40 °F ... +248 °F)	
Ideal operating temperatures as follows:	
T1: -40 ... +80 °C (-40 ... +176 °F)	**0**
T2: +80 ... 121 °C (+176 ... 250 °F)	**2**
Spare sensor code	
(Stainless steel construction)	
Liquid flow sensors for use with mounting frames or tracks (including portable)	
FSS200 A2 universal	**L B 0 1**
FSS200 B3 universal	**L C 0 1**
FSS200 C3 universal	**L D 0 0**
FSS200 D3 universal	**L E 0 0**
FSS200 E2 universal	**L F 0 0**
FSS200 A1H (high precision)	**L G 0 1**
FSS200 A2H (high precision)	**L H 0 1**
FSS200 A3H (high precision)	**L J 0 1**
FSS200 B1H (high precision)	**G K 1**
FSS200 B2H (high precision)	**G L 1**
FSS200 B3H (high precision)	**G T 1**
FSS200 C1H (high precision)	**G M 0**
FSS200 C2H (high precision)	**G N 0**
FSS200 D1H (high precision)	**G P 0**
FSS200 D2H (high precision)	**G Q 0**
FSS200 D3H (high precision)	**G U 0**
FSS200 D4H (high precision)	**G R 0**
High temperature universal liquid sensors up to 230 °C (446 °F)	
FSS200 High temp. sensor size 1 for 12.7 to 100 mm diam.	**L A 1 3**
FSS200 High temp. sensor size 2 for 30 to 200 mm diam.	**L A 2 3**
FSS200 High temp. sensor size 3 for 150 to 600 mm diam.	**L A 4 3**
FSS200 High temp. sensor size 4 for 400 to 1200 mm diam.	**L A 7 3**

	Article No.
Spare parts (Miscellaneous)	
SITRANS F US clamp-on	**7ME3960- ■ ■ ■ ■ ■**
Dedicated sensor mounting hardware	
Sensor mounting tracks (dual part aluminium with mounting straps) for pipes < 125 mm (5 inch)	
• Tracks for Universal sensor pair size A or B	**0 M A 0 0**
• Tracks for High precision sensor pair size A or B	**0 M B 0 0**
Sensor mounting frames pair with mounting straps	
• Frames for universal sensor size B (for pipes >125 mm (5 inch)	**CQO:1012FN-PB**
• Frames for universal sensor size C	**0 M C 0 0**
• Frames for universal sensor size D	**0 M C 0 1**
• Frames for universal sensor size E	**0 M C 0 2**
• Frames for High precision sensor size B (for pipes >125 mm (5 inch))	**CQO:1012FNH-PB**
• Frames for High precision sensor size C	**0 M D 0 0**
• Frames for High precision sensor size D	**0 M D 0 1**
Mounting straps for mounting frames (slotted stainless steel)	
• Straps for pipes from DN 50 to DN 150	**0 S M 0 0**
• Straps fFor pipes from DN 50 to DN 300	**0 S M 1 0**
• Straps fFor pipes from DN 300 to DN 600	**0 S M 2 0**
• Straps for pipes from DN 600 to DN 1200	**0 S M 3 0**
• Straps for pipes from DN 1200 to DN 1500	**0 S M 4 0**
• Straps fFor pipes from DN 1500 to DN 2100	**0 S M 5 0**
• Straps for pipes from DN 2100 to DN 3000	**0 S M 6 0**
Spacer bars (for indexing sensors on pipe)	
• Spacer bar for pipes to 200 mm/8 inch (liquid), 600 mm/24 inch (gas)	**0 M S 1 0**
• Spacer bar for pipes to 500 mm/20 inch (liquid), DN 1200/48 inch (gas)	**0 M S 2 0**
• Spacer bar for pipes to 800 mm/32 inch (liquid)	**0 M S 3 0**
• Spacer bar-extension for pipes to 1200 mm/48 inch (liquid) Only use in conjunction with 7ME3960-0MS30	**0 M S 4 0**
High precision mounting enclosures. Spacer bar is included; straps should be ordered separately	
• Stainless steel mounts for high precision size "C" sensor pair, single enclosure (each)	**0 W S 5 0**
• Stainless steel mounts for high precision size "D/E" sensor pair, single enclosure (each)	**0 W S 6 0**
• Stainless steel mounts for high precision size "C" sensors, dual enclosure (pair)	**0 W D 5 0**
• Stainless steel mounts for high precision size "D/E" sensors, dual enclosure (pair)	**0 W D 6 0**
Stainless steel straps for weld seal enclosure mounting (2 x required for dual enclosures)	
Mounting strap for pipe diameter to 300 mm (13 inch)	**0 S M 0 1**
Mounting strap for pipe diameter to 600 mm (24 inch)	**0 S M 1 1**
Mounting strap for pipe diameter to 1200 mm (48 inch)	**0 S M 2 1**
Mounting strap for pipe diameter to 1500 mm (60 inch)	**0 S M 3 1**
Mounting strap for pipe diameter to 2130 mm (84 inch)	**0 S M 4 1**
Mounting strap for pipe diameter to 3050 mm (120 inch)	**0 S M 5 1**

© Siemens 2020

Selection and ordering data

	Article No.
Spare parts (Miscellaneous)	
SITRANS F US clamp-on	**7ME3960-** ■ ■ ■ ■ ■
Stainless mounting tracks for high temp 991 sensors, with straps, dual part for direct and reflect ount, inc. straps	
Size 1 high temp sensor pair	**CQO:992MTNHMSH-1**
Size 2 high temp sensor pair	**CQO:992MTNHMSH-2**
Size 3 high temp sensor pair	**CQO:992MTNHMSH-3**
Size 4 high temp sensor pair	**CQO:992MTNHMSH-4**
Sensor cables FSS220 (IP65 NEMA 4X) wall mount	
Sensor cable pair, terminated, 5 m	**A5E39669934031**
Sensor cable pair, terminated, 10 m	**A5E39669934032**
Sensor cable pair, terminated, 20 m	**A5E39669934033**
Dedicated cable termination kits	
For externally supplied sensor cables, standard and plenum	**0 C T 0 1**
Cable gland kit (normally supplied with transmitter)	**A5E41693895**
for IP65 NEMA 4X enclosures	
Ultrasonic couplan	
Temporary water based for portable systems: 350 ml (12 oz): -34 ... +38 °C (-30 ... +100 °F)	**0 U C 1 0**
Permanent synthetic polymer based: 90 ml (3 oz) -40 ... +190 °C (-40 ... +375 °F)	**0 U C 2 0**
Permanent high temp fluoroether: -40 ... +230 °C (-40 ... +450 °F)	**0 U C 3 0**
Permanent vulcanizing silicone rubber couplant: 90 ml (3 oz): -40 …+120 °C (-40 …+250 °F)	**CQO:CC112**
Permanent high temp silicone grease: 12 ml (0.4 oz): -40 ... +230 °C (-40 ... +450 °F)	**CQO:CC117**
Permanent high temp silicone grease: 150 ml (5 oz): -40 ... +230 °C (-40 ... +450 °F)	**CQO:CC117A**
Couplant for submersible sensor applications	**CQO:CC120**
Dry coupling pads (qty of 10): -34 to +200 °C (-30 to +392 °F)	**0 U C 4 0**
Universal Sensor Test Blocks	
Test block for size A and B universal sensors	**0 T B 1 0**
Test block for size C and D universal sensors	**0 T B 2 0**

Accessories

Description	Article No.	
FSS200 Universal Sensors Selected for general purpose measurement. Since they are selected based on diameter only, a wide range of pipe sizes and materials can be covered with a minimum number of sensors. These can also be selected for cost savings on applications where standard accuracy is sufficient.	**7ME3950-...**	
FSS200 High Precision Sensors Selected for increased performance on steel pipes. They provide the highest accuracy achievable by the meters and therefore should be selected whenever higher accuracy / repeatability is required primarily based on pipe wall thickness.	**7ME3950...**	
FSS200 High Temperature Sensors Selected whenever pipe temperature will exceed 250 °F (120 °C) up to a maximum of 450 °F (232 °C). They are universal type and can therefore be used on any pipe material and are selected by pipe diameter. Constructed in stainless steel. Connection junction box included.	**7ME3950-...**	
Mounting tracks Typically used on smaller pipes for easier and more stable mounting of dedicated universal style sensor size A or B; also available for dedicated high precision sensor size A or B.	**7ME3960-...**	
Mounting Frames These items are useful in simplifying sensor installation. They are strapped to the pipe first and then the sensors are installed, making the installation less cumbersome and more precise. They also enable easy repeated mounting of the sensors assuring alignment to the original sensor positioning. They may be left in place at each measurement location where periodic flow surveys are conducted to simplify subsequent installations and ensure repeatable results.	**7ME3960-...**	
Magnetic mounting frames Magnetic mounting frames are designed to simplify clamp-on sensor installation on pipelines 8 inches (DN 200) and larger by eliminating the need for straps to secure them. They feature powerful magnets to ensure quick and accurate setup. Compatible with all C, D and E universal and high-precision sensors belonging to the SITRANS FSS200 clamp-on family. Magnetic mounting frames are constructed in aluminum for a high level of durability. Ideal use on temporary installations.	**7ME3960-0MD02**	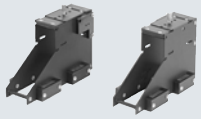

© Siemens 2020

Selection and ordering data (continued)

Description	Article No.	
Test Block Used for checking operation of a meter and sensors prior to a field installation, or as a troubleshooting tool. Selected by sensor size, each block accommodates 2 sensor sizes. Available only for universal sensors.	**7ME3960...**	
Straps Used to fasten sensors or mounting frames to pipe for dedicated meter installations. Stainless steel construction for corrosion resistance.	**7ME3960-...**	
Cable Gland Cable gland kit for use with SITRANS FST020 transmitters housed in IP65 NEMA 4X wall mount enclosures. Kit contains two single port glands for power and one dual port gland for sensor cables.	**A5E41693895**	
Ultrasonic Couplant Fills any voids between sensor emitting surface and pipe wall to allow maximum energy transfer between sensor and pipe. Several different types of couplants are employed as determined by the application conditions and type of installation (Temporary or permanent).	**7ME3960-...**	
Dry Couplant The dry coupling pad is intended for use in any liquid, clamp-on transit time or Doppler applications that require a more durable coupling material. Installation is easy by simply placing one strip of material between sensor and pipe. Not intended for clamp-on gas where damping material is used. The temperature range is -34 to +200 °C (-30 to +392 °F).	**7ME3960-...**	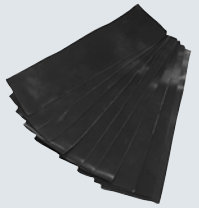
Termination Kit (Flow Sensors) Termination kit for one pair of sensor cables. These can be provided in cases where users will be purchasing bulk cable directly and cutting to length at site, or when existing cable length is to be altered. Selected by cable type.	**7ME3960-...**	

Description	Article No.	
FST020 Transmitter module Main transmitter module for FST020 including SD-card and firmware load	**A5E41693884**	
FST020 Transmitter module cover AC Cover for FST020 Main transmitter module for AC powered units; includes label and screws	**A5E41693888**	
FST020 Transmitter module cover DC Cover for FST020 Main transmitter module for DC powered units; includes label and screws	**A5E41693889**	
FST020 Enclosure cover Enclosure lid for FST020; includes display module, connection label and screws	**A5E38846901**	
FST020 Power Supply AC Power supply module for FST020, AC power	**7ML1830-1MD**	
FST020 Power Supply DC Power supply module for FST020, DC power	**7ML1830-1ME**	
SensorFlash SD-card 4 GB micro SD card -40 °C ... +85 °C for FST020 or FST030 for data storage, firmware and back-up	**A5E38288507**	
Hardware kit Various nuts, screws, and grounding strap for FST020 transmitter	**A5E41944763**	
Sensor cable pair, 5 m Sensor cable for connection between FSS200 sensors and FST020 transmitter, 5 meters in length	**A5E39669934031**	
Sensor cable pair, 10 m Sensor cable for connection between FSS200 sensors and FST020 transmitter, 10 meters in length	**A5E39669934032**	
Sensor cable pair, 20 m Sensor cable for connection between FSS200 sensors and FST020 transmitter, 20 meters in length	**A5E39669934033**	
Enclosure mounting kit Mounting kit to fix enclosure on a 2" stanchion pipe	**QCB:1012NMB1**	

© Siemens 2020

Dimensional drawings

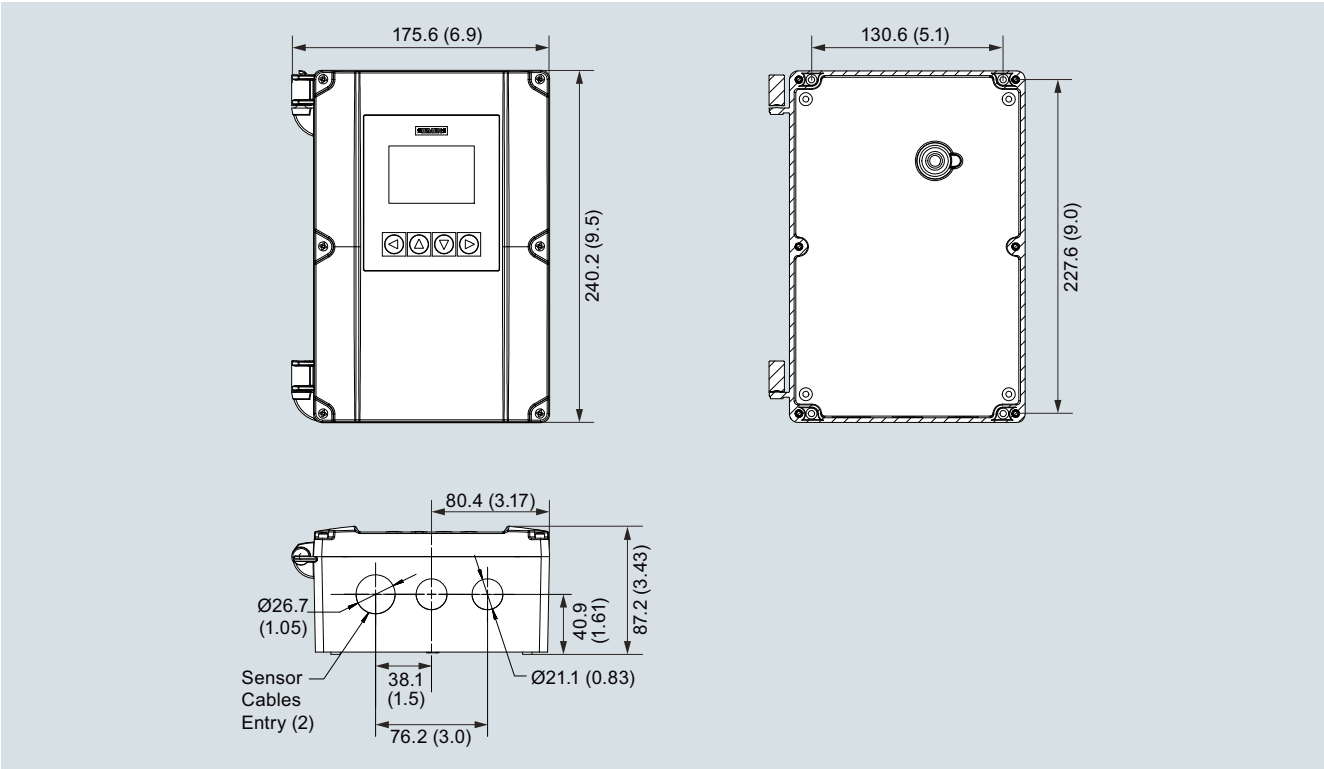

SITRANS FST020 IP65 (NEMA 4X), wall mount enclosure, dimensions in mm (inch)

© Siemens 2020

Overview

The SITRANS FST020 is the basic device for simple and cost-effective clamp-on applications. As a single-path device, it is suitable for flow measurement on liquids that do not require temperature or viscosity consideration and where highest accuracies are not required.

Historically, the FST020 comes from the clamp-on family of analog FUS1010 transmitters. Since the revision in 2017, the updated transmitter is now part of a digital platform based on the latest developments within Digital Signal Processing (DSP) technology - engineered for high measuring performance, fast response to step changes in flow, high immunity against process noise and simplicity in installation, commissioning and maintenance.

The FST020 transmitter delivers standard parameter measurements i.e. volume flow, flow speed or sound velocity by analog outputs and Modbus communication.

Process values

- Volume flow
- Flow velocity
- Sound velocity
- Totalizer 1

Benefits

Flow calculation and measurement

- Dedicated volume flow calculation with DSP technology
- 100 Hz update rate for all primary process values
- Maximum data age from sensor to output is 20 ms
- Independent low flow cut-off settings for volume flow and velocity
- Zero-point adjustment on command from discrete input or host system

Operation and display

- User-configurable operation display
  - Fully graphical display 240 x 160 pixel display with up to 6 programmable views
  - Self-explaining alarm handling/log in clear text
  - Help text for all parameters appears automatically in the configuration menu
- SensorFlash technology stores production specific system documentation and provides removable memory of all flowmeter setups and functions
  - Calibration certificates (with ordered calibration)
  - Non-volatile memory backup of operational data
  - Transfer of user configuration to other flowmeters
  - 4GB SD card for storage and data logging
  - Audit trail of all parameter changes
  - Alarm logging

Alarms and safety

- Advanced diagnosis and service menu enhances troubleshooting and meter validation
- Configurable upper and lower alarm and warning limits for all process values

Outputs and control

- Monitoring comprised of 1 individually configurable totalizer
- Single parameter outputs that can be assigned individually to any of the following parameters:
  - Volume flow
  - Flow velocity
  - Sound velocity
  - Flow direction

Channel 1 is 4 to 20 mA analog output. The current signal can be configured for passive volume flow.

Relay output(s) can be user configured to Alarm status or warning.

Modbus RTU RS 485 comes as standard.

Signal input

The signal input can be user-configured for:

- Totalizer reset functions
- Forcing outputs or freezing process values
- Initiating automatic zero point adjustment

Approvals and certificates

The SITRANS FST020 transmitter was designed to comply with or exceed the requirements of international standards and regulations.

Design

- Field clamp-on (non-intrusive)
- Single path, for only one pair of sensors on one pipe
- IP65 (NEMA 4X) wall mount housing, constructed of polycarbonate
- Available AC or DC power, 100 to 240 V AC, 11.5 to 28.5 V DC

Function

- 240 x 160 pixel graphical display with 4 key navigation and backlight
- 6 user programmable views for individual process and diagnostic information
- Modbus RTU communication
- 100 Hz update rate for all primary process value
- Independent low flow cut-off settings for volume and flow velocity
- Fully compatible with Siemens PDM version 8.2 service pack 1 or higher
- Bidirectional flow operation
- Menus available in English and German

© Siemens 2020

Technical specifications

Input	
Flow range	± 12 m/s (± 40 ft/s), depending on pipe size higher or lower
Flow direction	bi-directional
Flow sensitivity	0.0003 m/s (0.001 ft/s) flow rate independent
Digital inputs	
Totalizer Hold	Optically isolated diode Activated ON: Input voltage: 2 … 10 V DC
Totalizer Reset	Opticall isolated diode Activated ON: Input voltage: 2 … 10 V DC
Output Channel 1	
Current	4 ... 20 mA (isolated) Externally powered 10 … 30 V DC
Relay	30 V DC, 3 VA AC max.
Pulse rate	Optically isolated transistor 10 mA, 30 V DC max Pulse: 41.6 ms ... 5 s pulse duration Frequency: 0 ... 12.5 kHz (50 % duty cycle)
Accuracy	
Accuracy	For velocities above 0.3 m/s (1 ft/s), ±1.0 % of flow
Repeatability	± 0.25 % (according to ISO 11631)
Zero Drift	0.1 % of rate; < ±0.001 m/s (±0.003 ft/s)
Data refresh rate	100 Hz
Rated operation conditions	
Operating temperature	-10 … +50 °C (14 … +122 °F)
Storage temperature	-20 … +60 °C (-4 … +140 °F)
Degree of protection	IP65/NEMA 4X
Design	
Weight	1.4 kg (3.0 lbs)
Dimensions (W x H x D)	176 x 240 x 87 mm (6.9 x 9.5 x 3.4 inch)
Enclosure material	Polycarbonate
Power supply	100 ... 240 V AC @ 20 VA or 11.5 ... 28.5 V DC @ 10 W
Certificates and approvals	
Unclassified locations • General safety	UL, cUL, CE

© Siemens 2020

Selection and ordering data

				Article No.													
Transmitter SITRANS FST020 (Basic), IP65 (NEMA 4X) ↗				**7ME3570-**													Ord. Code
				■	■	■	**4**	**0**	**-**	**0**	■	■	■		■	■	■
↗Click on the Article No. for the online configuration in the PIA Life Cycle Portal.																	
Number of ultrasonic paths																	
Single path				**1**													
Flowmeter functions and I/O configurations																	
With display, keypad, 1x 4 ... 20 mA, 1x relay, 1x pulse/frequency, 2x digital input, Modbus RTU					**J**												
Meter power options																	
100 ... 240 V AC						**A**											
11.5 ... 28.5 V DC						**B**											
Sensor FSS200[1]																	
When ordering a flow system, sensors always come automatically with suitable mounting equipment. Smaller sensor sizes A & B come with mounting tracks, while sensor sizes C, D & E are supplied with frames and spacer bars. Straps provided are for the indicated maximum OD listed below.Strap kits are available to accommodate larger pipes (refer to spare part list). Refer to "Sensor Selection Charts" to find the most suitable sensors for specific pipe sizes and wall thicknesses.																	
No sensor										**A**							
For the following Universal sensors, temperature range is -40 ... +121 °C (-40 ... +250 °F), FSS200 Universal: select according to outer pipe diameter																	
FSS200 Universal	A2	12.7 ... 50 mm (0.5 ... 2")	Track mount and straps provided up to 75 mm (3")							**B**							
FSS200 Universal	B3	19 ... 127 mm (0.75 ... 5")	Track mount and straps provided up to 125 mm (5")							**C**							
FSS200 Universal	C3	51 ... 305 mm (2 ... 12")	Mounting frame, straps and spacer bar provided up to 330 mm (13")							**D**							
FSS200 Universal	D3	203 ... 610 mm (8 ... 24")	Mounting frame and straps and spacer bar provded up to 600 mm (24")							**E**							
FSS200 Universal	E2	304 ... 9144 mm (12 ... 360")	Mounting frame and straps and spacer bar provided up to 1200 mm (48")							**F**							
For the following High Precision sensors T1, temperature range is -40 ... +120 °C (-40 ... +248 °F), FSS200 High Precision: select according to pipe wall thickness																	
FSS200 HP	A1H	0.6 ... 1.0 mm (0.025 ... 0.4")	Track mount and straps provided up to 75 mm (3")							**G**							
FSS200 HP	A2H	1.0 ... 1.5 mm (0.04 ... 0.06")	Track mount and straps provided up to 75 mm (3")							**H**							
FSS200 HP	A3H	1.5 ... 2.0 mm (0.06 ... 0.08")	Track mount and straps provided up to 75 mm (3")							**J**							
FSS200 HP	B1H	2.0 ... 3.0 mm (0.08 ... 0.12")	Track mount and straps provided up to 125 mm (5")							**K**							
FSS200 HP	B2H	3.0 ... 4.1 mm (0.12 ... 0.16")	Track mount and straps provided up to 125 mm (5")							**L**							
FSS200 HP	C1H	4.1 ... 5.8 mm (0.16 ... 0.23")	Mounting frame, straps and spacer bar up to 600 min (24")							**M**							
FSS200 HP	C2H	5.8 ... 8.1 mm (0.23 ... 0.32")	Mounting frame, straps and spacer bar up to 600 min (24")							**N**							
FSS200 HP	D1H	8.1 ... 11.2 mm (0.32 ... 0.44")	Mounting frame and straps provided up to 1200 mm (48")[1]							**P**							
FSS200 HP	D2H	11.2 ... 15.7 mm (0.44 ... 0.62")	Mounting frame and straps provided up to 1200 mm (48")[1]							**Q**							
FSS200 HP	D4H	15.7 ... 31.8 mm (0.62 ... 1.25")	Mounting frame and straps provided up to 1200 mm (48")[1]							**R**							
For the following High Temperature sensors, temperature range is -40 ... +230 °C (-40 ... +446 °F), FSS200 High Temperature: select according go outer diameter																	
FSS200 HT	Size 2	30 ... 200 mm (1 ... 8")	Mounting track and straps provided up to 250 mm (10")							**Z**				**P**	**1**	**A**	
FSS200 HT	Size 3	150 ... 610 mm (6 ... 24")	Mounting track and straps provided up to 650 mm (26")							**Z**				**P**	**2**	**A**	
FSS200 HT	Size 4	400 ... 1200 mm (16 ... 48")	Mounting track and straps provided up to 1250 mm (50")							**Z**				**P**	**3**	**A**	
Sensor cable (pair - terminated)																	
No sensor cable											**A**						
Sensor cable, HDPE jacket, submersible, length																	
• 5 m (16.4 ft)											**P**						
• 10 m (32.8 ft)											**Q**						
• 20 m (65.6 ft)											**R**						
Approvals																	
UL, ULc, CE												**1**					

[1] Supplied spacer bar supports pipes up to 1050 mm (42"). For pipes larger than 1050 mm (42") purchase also, spare part 7ME3960-0MS40 (1012BN-4).

[2] Made of stainless steel construction.

© Siemens 2020

SITRANS FST020 ultrasonic flow transmitter, wall mount housing

Selection and ordering data

	Order code
Further designs Please add "**-Z**" to Article No. and specify Order code(s).	
Cable termination kit for customer supplied sensor cable pair Sensor cable termination for standard and plenum cable	**T01**
Mass storage Enable mass storage function or SD-card (not available for USA)	**S30**
Tag and name plates Tag plate, transmitter and sensor	**Y19**

Dimensional drawings

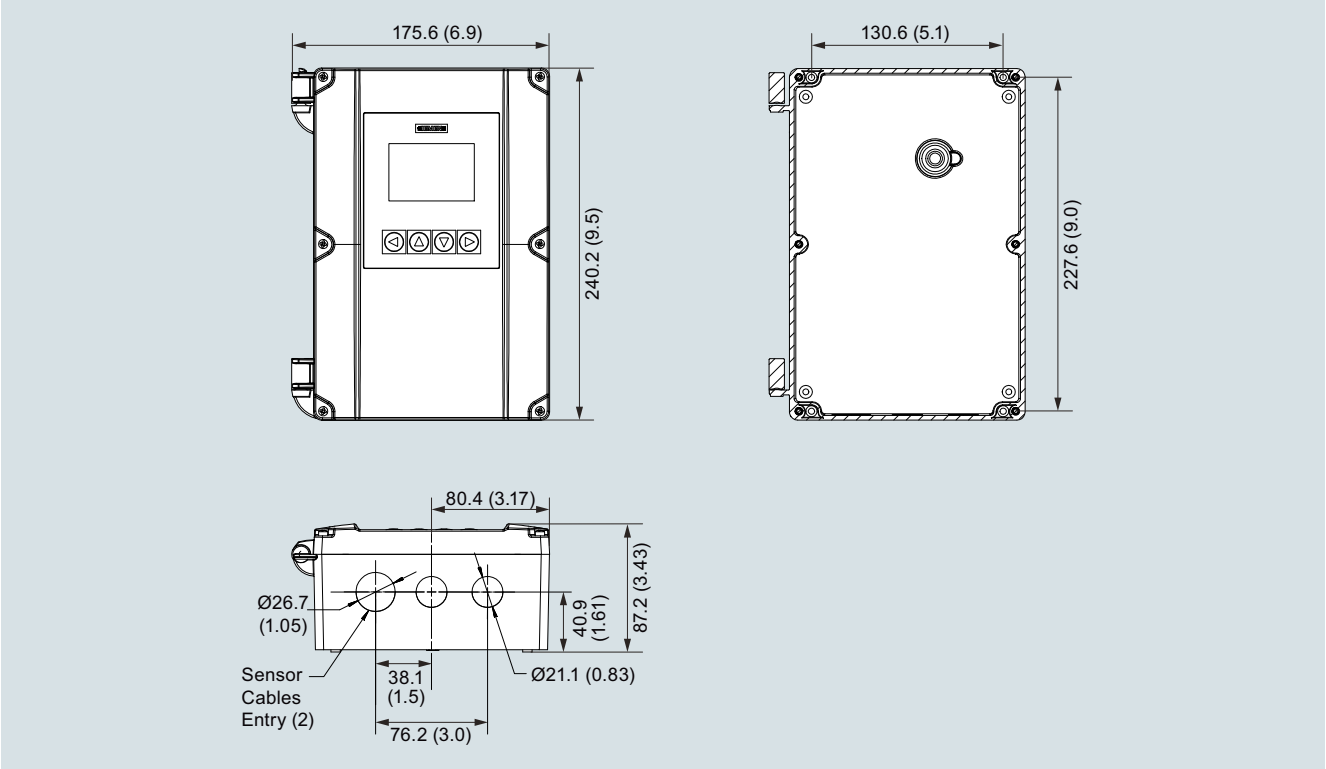

SITRANS FST020 IP65 (NEMA 4X), wall mount enclosure, dimensions in mm (inch)

© Siemens 2020

Overview

The thickness gauge is used to measure the wall thickness of the pipe that a clamp-on ultrasonic flowmeter is installed on. The wall thickness value is a vital factor in the flow computation model and a prerequisite for precise clamp-on ultrasonic flow measurement. When measuring any pipe wall thickness the thickness gauge can also be used as a stand-alone tool used to measure the wall thickness of any metallic or non-metallic pipe materials capable of acting as an ultrasonic wave conductor.

Benefits

The thickness gauge is an indispensable tool in accurate clamp-on ultrasonic flow measurement. For a flowmeter to measure correctly it needs to know the exact wall thickness of the pipe it is measuring on. Since even the smallest miscalculation can have a major effect on the flow reading, the pipe thickness gauge has to be extremely precise. This is why the standard probe operates at a 5 MHz frequency making it capable of measuring pipe thickness ranging from 0.1 to 200 mm (0.03“ to 7.9“) with a very high resolution of up to 0.1 mm (0.004“).

Application

The thickness gauge can be used in any field application where there is a need for flow measurement.

Design

The hand-held micro-processor controlled gauge is designed to measure the thickness of various metallic or non-metallic pipe. Such materials include steel, aluminum, titanium, plastics and ceramics. Measurement results are shown in either inches or millimeter; only a simple pre-calibration to a known thickness or sound velocity is required. The simple-to-read 4-digit LCD display featuring a basic user friendly menu is easily navigable with only three conveniently located push buttons. The lightweight computing unit weighs a mere 150 g (5.3 oz) making it ideal for quick and easy on-site pipe wall thickness measurement and with two AAA alkaline batteries trouble-free operation is ensured for 250 hours.

Function

The thickness gauge measurement is based on the transit time ultrasonic wave propagation principle: a high frequency ultrasonic beam is transmitted into the pipe being measured through a probe acting as a sender and receiver. When the probe subsequently retrieves that same signal, an internal counter calculates the time taken for the signals to be sent and received through the pipe. This value is used to evaluate the speed of sound through the pipe and consequently, the thickness of the pipe wall.

Technical specifications

Thickness gauge	
Display type	4-digit LCD
Display resolution	0.1 mm (0.004“)
Measurement units	Metric and imperial
Sound velocity range	1 000 … 9 999 m/s (3 280 … 32 805 ft/s)
Operating temperature	-10 ... +50 °C (14 ... 122 °F)
Probe/pipe temperature	70 °C (158 °F)
Update range	4 Hz
Frequency	5 MHz
Power source	2 x 1.5 V AAA dry cells
Power consumption	Working current is less than 3 mA
Battery life	Approx. 250 h on a set of batteries
Dimensions (W x H x D)	61 x 108 x 28 mm (2.4 x 4.3 x 1.1“)
Weight	150 g (5.3 oz)

Selection and ordering data

	Article No.
Thickness gauge	**7ME3951-0TG20**

© Siemens 2020

Selection and ordering data

Accessories / Spare parts for Clamp-on ultrasonic flowmeters

Description	Article No.	
Universal Portable Sensors Selected generally for portable systems where a wide variety of pipes are to be measured. Since they are selected based on diameter only, a wide range of pipe sizes and materials can be covered with a minimum number of sensors. These can also be selected as a cost savings on applications where standard accuracy is sufficient.	**7ME3951-...**	
High Precision Sensors Selected generally for dedicated meters since the need to cover a range of pipes is not a requirement. They provide the highest accuracy achievable by the meters and therefore should be selected whenever higher accuracy/repeatability is required. They are only applicable to steel pipes but no other metals, and are selected solely by wall thickness.	**7ME3950-...**	
High Temperature Sensors Are selected whenever pipe temperature will exceed 250 °F (120 °C) up to a maximum of 450 °F (232 °C). They are universal type and can therefore be used on any pipe material and are selected by pipe diameter.	**7ME3950-...**	
High Precision Mount These provide the most secure and strongest mounting of the flow sensors. They are generally selected for "High End" meter types where maximum performance criteria applies. They accommodate high precision sensors designed to mount inside these enclosures. May be welded to the pipe if so desired by the customer. They come in 2-piece or 1-piece configurations depending upon the application pipe size and type (Liquid/Gas).	**7ME3960-...**	
Mounting tracks Typically used on smaller pipes for easier and more stable mounting for dedicated universal style sensor size A or B, also available for dedicated high precision sensor size A or B.	**7ME3960-...**	

Description	Article No.	
Magnetic mounting frames Magnetic mounting frames are designed to simplify clamp-on sensor installation on pipelines 8 inches (DN200) and larger by eliminating the need for straps to secure them.They feature powerful magnets to ensure quick and accurate setup.Compatible with all C, D and E universal and high-precision sensors belonging to the SITRANS F US clamp-on family, magnetic mounting frames can be installed on any carbon steel pipe and are constructed in aluminum for a high level of durability.	**7ME3960-0MD02**	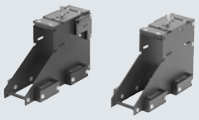
Mounting Frames These items are useful in simplifying sensor installation. They are strapped to the pipe first then the sensors are installed, making the installation less cumbersome and more precise. They also enable easy repeated mounting of the sensors assuring conformation to the original sensor positioning. They may be left in place at each measurement location where periodic flow surveys are conducted to simplify subsequent installations and ensure repeatable results.	**7ME3960-...**	
Spacer Bars Sensors are required to be mounted at a set distance from each other as determined by pipe size and medium being measured. The spacer bar simplifies this requirement by eliminating the need to undertake a precise dimensional measurement. The flowmeter will specify a specific spacing index which is easily accommodated with the marked indices on the bar.	**7ME3960-...**	
Clamp-On RTD's 1000 W platinum RTD's for use where temperature is required. Used with Energy Meters to record supply/return temperature. For this purpose precision matched pairs (to 0.02 °C) are supplied. Single RTD's are also used with FUH and FUG meters to enable live calculations of "Liquident" and Standard Volume Correction.	**7ME3950-...**	
Insert RTD's Are identical to clamp-on RTD's as described above except that they are inserted into the pipe (In a Thermowell). They provide more precise and quicker responding temperature measurement. They are selected when precise temperature measurement of the actual liquid or gas is required as opposed to pipe "skin temperature". Since they project into the pipe they cannot be used in pipeline that undergo periodic "pigging".	**7ME3950-...**	

© Siemens 2020

Selection and ordering data (continued)

Description	Article No.	
Standard Cable (Flow Sensor or RTD) Selected for general purpose installations where no special application requirements exist.	7ME3960-...	
Submersible Cable (Flow Sensor) Polyethylene jacketed, for locations that experience periodical or continual submersion of the flow sensors.	7ME3960-...	
Plenum Cable (Flow Sensor or RTD) For temperatures above 180 °F. Teflon jacketed to withstand high temperatures, is used when high temp sensors are specified.	7ME3960-...	
Armored Cable (Flow Sensor) Double shielded cable, selected when cable will not be installed in conduit between meter and sensors.	7ME3960-...	
Temperature sensor cable Cable to connect field installed RTD to flow meter, available in Teflon wrapped, plenum or submersible grade. Typically used for FUE, FUH and FUG series meters where a temperature sensor is employed.	7ME3960-...	
Straps Used to fasten sensors or mounting frames to pipe for dedicated meter installations. Stainless steel construction for corrosion resistance.	7ME3960-...	
Chains (EZ clamps) Used to fasten portable sensors or mounting frames to pipe. Thumbscrews eliminate need for hand tools when mounting sensors, and allow for easy on/off operations.	7ME3960-...	
Ultrasonic Couplant Fills any voids between sensor emitting surface and pipe wall to allow maximum energy transfer between sensor and pipe. Several different types of couplants are employed as determined by the application conditions and type of installation (Temporary or permanent).	7ME3960-...	
Dry Couplant The dry coupling pad is intended for use in any liquid, clamp-on transit time or Doppler applications that require a more durable coupling material. Installation is easy by simply placing one strip of material between sensor and pipe. Not intended for clamp-on gas where damping material is used. The temperature range is -34 to +200 °C (-30 to +392 °F).	7ME3960-...	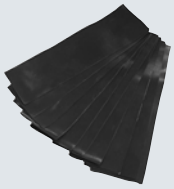

Description	Article No.	
Damping Material Used with gas meters, and required as part of their sensor installation. This material absorbs excess ultrasonic energy from the pipe wall to enable the meter to detect and operate with low amplitude sensor signals normally associated with Clamp-on Gas applications.	7ME3960-...	
Test Block Used for checking operation of a meter and sensors prior to a field installation, or as a troubleshooting tool. Selected by sensor size, each block accommodates 2 sensor sizes. Available only for universal sensors.	7ME3960-...	
Termination Kit (Flow Sensor or RTD) Provides the connectors, labels and shrink tubing or other associated hardware to complete the termination of a specific cable type. These can be provided in cases where users will be purchasing bulk cable directly and cutting to length at their site, or when existing cable length is to be altered. Selected by cable type.	7ME3960-...	
Cable Gland Kit Cable gland kit for use with SITRANS FUS1010, FUH1010 and FUG1010 Ultrasonic Flowmeters housed in IP65 NEMA 4X wall mount enclosures. Kit contains a total of 5 glands to manage and seal the exit and entry of wires and cables to ancillary devices.	A5E32834162	

© Siemens 2020

Selection and ordering data (continued)

RTD cable selection chart (Dedicated, each)

RTD cable codes for length and type				
Cable length m (ft)	Standard -40 … +200 °C (-40 … +392 °F)	Submersible -40 … +200 °C (-40 … +392 °F)	for insert RTD -40 ... +200 °C (-40 ... 392 °F)	for submersible insert RTD -40 ... +200 °C (-40 ... 392 °F)
	Order code			
6 (20)	**R01**	**R11**	**R21**	**R31**
15 (50)	**R02**	**R12**	**R22**	**R32**
30 (100)	**R03**	**R13**	**R23**	**R33**
46 (150)	**R04**	**R14**	**R24**	**R34**
61 (200)	**R05**	**R15**	**R25**	**R35**
91 (300)	**R06**	**R16**	**R26**	**R36**

© Siemens 2020

Overview

SITRANS FX vortex flowmeters provide accurate volumetric and mass flow measurement of steam, gases and liquids as an all-in-one solution with integrated temperature and pressure compensation.

Benefits

- 2-wire technology with HART communication
- Integrated temperature compensation for saturated steam as standard feature
- Integrated temperature and pressure compensation enabling direct measurement of mass, standard volume flow rate and energy
- One instrument for measuring pressure, temperature and flow. No additional installation of pressure and temperature sensors
- Maximum process reliability thanks to Intelligent Signal Processing (ISP) - stable readings, free of external disturbances
- Fully welded stainless steel construction with high corrosion, pressure and temperature resistance
- Maintenance-free design
- Ready to use due to plug & play feature
- Minimal pressure drop
- Compact or remote design
- Free Air Delivery (FAD) measurement of a compressor

Application

The SITRANS FX300 is a flowmeter in a single or dual transmitter version, suitable for measuring industrial steam, gases, as well as conductive and non-conductive liquids, e.g. steam (saturated steam, superheated steam), industrial gases (compressed air, nitrogen, liquefied gases, flue gases), and conductive and non-conductive liquids (demineralized water, boiler feed water, solvents, heat transfer oil).

The main applications of SITRANS FX300 can be found in the following sectors:

- Chemical
- Petrochemical
- Oil & Gas
- Power plants
  - Air
  - Heating
  - Cooling
  - Chilling
- Food & beverage
  - Pharmaceutical
  - Sugar refineries
  - Dairies
  - Breweries
  - Production of soft drinks
- Pulp & paper
- Water & waste water

System overview

Version	Flange	Sandwich	Dual transmitter
Compact			
Remote			

© Siemens 2020

Design

SITRANS FX300 vortex flowmeters are available in the following variants:

SITRANS FX300 Single transmitter

The single transmitter variant exists in flange or sandwich design. In flange design the SITRANS FX300 offers a sensor with integrated nominal diameter reduction up to two nominal diameter sizes. That ensures best results in accuracy and optimal measuring ranges even in pipelines with large diameters, designed for low pressure loss. By forgoing complex pipeline reduction installations, space and cost saving installations can be realized. At the same time the number of potential leakages is reduced to a minimum.

The flowmeters in sandwich design will be supplied with additional optimised centring rings. With installation of the centring rings the SITRANS FX300 can be aligned centrically and eliminates any offset between the sensor and the pipeline.

The SITRANS FX300 is also available as a remote version. This feature allows separating the transmitter from the sensor up to a distance of 15m (49 ft). The remote mounted transmitter allows easy operation and optimal readability.

The following configurations can be selected for the single transmitter variant:

- Basic version
  Suitable for liquids and gases, integrated temperature compensation included as standard for saturated steam
- With integrated pressure compensation
  Version with integrated temperature and pressure compensation for gases, wet gases, gas mixtures or steam (energy measurement optional)
- With integrated pressure compensation and isolation valve
  Allowing the pressure sensor to be shut off for the purpose of pressure and leak testing of the pipeline or for being exchanged without interrupting the process.
- Remote version
  With this version transmitter and sensor are locally seperated. In addition, it offers the same features as the compact version (integrated temperature and pressure compensation, isolation valve).

SITRANS FX300 Dual transmitter
This is a genuine redundant system with two independent sensors and transmitters providing twofold functional reliability and availability of the measurement. This variant is optimally suited for measurements in multi-product pipelines.

The dual transmitter version is available as:

- Basic version
  Suitable for liquids and gases, temperature compensation integrated as standard for saturated steam

Function

Operating Principle

SITRANS F X vortex flowmeters measure flow rate by detecting the frequency at which alternating vortices are shed from a bluff body inserted into the flow stream. This principle of measurement is derived from the Karman phenomenon of vortex shedding. The frequency of the alternating vortices is proportional to the flow rate.
The passage of a vortex causes a slight stress on a pick-up sensor placed downstream of the bluff body. The stress is detected by piezo-electric crystals placed inside the pick-up sensor.

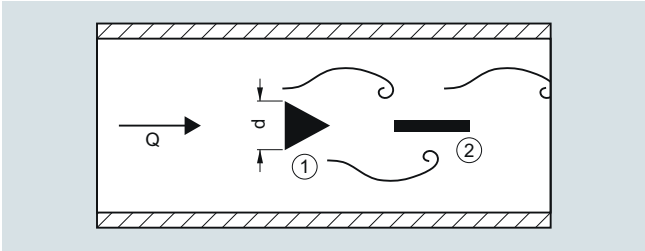

① = Bluff Body, ② = Pick-up

The flowmeter calculates the flow velocity using the following equation:

$Q = A \cdot V = A \cdot d / St \cdot f = 101.93 \cdot f / K$ [m^3/h]

Where:

Q = flow rate [m^3/h]

f = vortex shedding frequency [Hz]

K = calibration constant [pulses/m^3]

d = width of the bluff body [m]

St = Strouhal Number

A = cross-section area [m^2]

V = flow velocity [m/s]

Requirements

In order to generate the vortex streets, the medium must have a minimum velocity:

- For steam and gases, the flow velocity must be 2 to 80 m/s (6.6 to 262 ft/s)
- For liquids the flow velocity must be 0.4 to 10 m/s (1.3 to 32.8 ft/s)

© Siemens 2020

Configuration

Valid combinations of sensor/connections size with flange norm/nominal pressure are shown in the following table

SITRANS FX Flanged - Single transmitter (7ME2600-...)										
Sensor size	**Connection size**	**EN 1092-1, Form B1/B2, PN 10**	**EN 1092-1, Form B1/B2, PN 16**	**EN 1092-1, Form B1/B2, PN 25**	**EN 1092-1, Form B1/B2, PN 40**	**EN 1092-1, Form B1/B2, PN 63**	**EN 1092-1, Form B1/B2, PN 100**	**ANSI B16.5, class 150**	**ANSI B16.5, class 300**	**ANSI B16.5, class 600**
DN15	DN 15	-	-	-	•	-	•	•	•	•
	DN 25	-	-	-	•	-	•	•	•	•
	DN 40	-	-	-	•	-	•	•	•	•
DN 25	DN 25	-	-	-	•	-	•	•	•	•
	DN 40	-	-	-	•	-	•	•	•	•
	DN 50	-	•	-	•	•	•	•	•	•
DN 40	DN 40	-	-	-	•	-	•	•	•	•
	DN 50	-	•	-	•	•	•	•	•	•
	DN 80	-	•	-	•	•	•	•	•	•
DN 50	DN 50	-	•	-	•	•	•	•	•	•
	DN 80	-	•	-	•	•	•	•	•	•
	DN 100	-	•	-	•	•	•	•	•	•
DN 80	DN 80	-	•	-	•	•	•	•	•	•
	DN 100	-	•	-	•	•	•	•	•	•
	DN 150	-	•	-	•	•	•	•	•	•
DN 100	DN 100	-	•	-	•	•	•	•	•	•
	DN 150	-	•	-	•	•	•	•	•	•
	DN 200	•	•	•	•	-	-	•	•	-
DN 150	DN 150	-	•	-	•	•	•	•	•	•
	DN 200	•	•	•	•	-	-	•	•	-
	DN 250	•	•	•	•	-	-	•	•	-
DN 200	DN 200	•	•	•	•	-	-	•	•	-
	DN 250	•	•	•	•	-	-	•	•	-
	DN 300	•	•	•	•	-	-	•	•	-
DN 250	DN 250	•	•	•	•	-	-	•	•	-
	DN 300	•	•	•	•	-	-	•	•	-
DN 300	DN 300	•	•	•	•	-	-	•	•	-

• available
- not available

© Siemens 2020

Technical specifications

Input	
Measuring range limits	See “Dimensional Drawings”
Media pressure	1 ... 100 bar (14.5 … 1450 psi) (Higher pressures on request)
Output	
Current output	
• Measuring range	4 … 20 mA
• Over range	20.8 mA ± 1 % (105 % ± 1 %)
• Load	
- min.	100 Ω
- max.	R_{max} = ($U_{Power\ Supply}$ – 14 V)/22 mA
• Error signal	NAMUR NE 43
• Maximum output	22 mA (112.5 %)
• Multidrop mode	4 mA
Digital output	
• Communication	HART
• Physical layer	FSK
• Device category	Transmitter
Pulse output	
Passive pulse output, setting pulse value (meter factor) for totalized flow or heat quantity (energy) with option Y47 (e.g.: 1 pulse/kg or 1 pulse/kWh)	
• Pulse frequency	Max. 0.5 Hz
• Power supply	Min. 24 V DC as NAMUR or
• Non-Ex version	open < 1 mA, max. 36 V, closed 100 mA, U < 2 V
• Ex version	open < 1 mA, max. 30 V, closed 100 mA, U < 2 V
Accuracy	
Standard version	
• For liquids - Re ≥ 20 000	± 0.75 %
• For steam and gases - Re ≥ 20 000	± 1 %
• For steam, gases and liquids - 10 000 < Re < 20 000	± 2 %
Pressure and temperature compensated version	
• For liquids	
- 10 000 < Re < 20 000	± 2 %
- Re ≥ 20 000	± 0.75 %
• For gases and steam	
- 10 000 < Re < 20 000	± 2.5 %
- Re ≥ 20 000	± 1.5 %
Repeatability	± 0.1 %
Installation conditions	
(At different conditions, e.g. installation after control valve, bends or reductions, please refer to the operating instructions.)	
• Inlet run	≥ 20 x DN
• Outlet run	≥ 5 x DN

Software	
Uncompensated for liquids and gases, density-compensated by temperature for saturated steam	Order option 1
Density-compensated by temperature and pressure for superheated steam	Order option 4
Gross heat meter	
When the thermal energy of steam is to be measured	Order option 5
Following information is required at option Y51 to Y56	• Y51 Variable current output: Flow rate, power • Y52 Power unit Select one of the following units: kJ/h, MJ/h, GJ/h, Btu/h, kcal/h, kW, MW or special (custom) • Y53 Fullscale value power • Y54 Variable pulse output: Totalized flow, energy • Y55 Totalizer on/off • Y56 Energy unit Select one of the following units: kJ, MJ, GJ, Btu th, kcal, kWh, MWh or special (custom).
Density compensated by temperature and pressure for gases, wet gases	Order option 7
Wet gases	Select Y49 and enter relative humidity of process medium in %
FAD - Free Air Delivery	
When the delivered air of a compressor is to be measured	Order option 8
In Y81 to Y87 add information regarding:	• Y81 Inlet suction temperature • Y82 Atmospheric pressure • Y83 Pressure drop at inlet suction filter • Y84 Inlet relative humidity • Y85 Actual compressor rotation (rpm) • Y86 Rated compressor rotation (rpm)Rated compressor rotation (rpm) • Y87 Relative humidity at compressor output
Mixed gases	When fluid is a gas mixture, specifiy the single gas components and their amount/concentration in %.
Rated operation conditions	
Ambient temperature	
• Non-Ex version	-40 … +85 °C (-40 … +185 °F)
• Ex version	-40 … +65 °C (-40 … +149 °F)
Storage temperature	-50 … +85 °C (-58 … +185 °F)
Media temperature	-40 … +240 °C (-40 … +464 °F)
Density	Taken into consideration when dimensioning
Viscosity	< 10 cP
Reynold's number	10 000 … 2 300 000
Media pressure limit	Max. 100 bar (1450 psi) Higher pressure on request (contact your local Siemens representative)

© Siemens 2020

Technical specifications (continued)

Design	
Material	
• Sensor/Pick-up	AISI 316L (1.4404)/AISI 316L (1.4435) Hastelloy C22/2.4602 available on request (contact your local Siemens representative)
• Transmitter housing	Aluminum
• Sensor gaskets (Pick-up/Pressure sensor)	AISI 316L(1.4435) /FPM or FFKM FPM (Viton) for steam and non-aggressive gases FFKM (Kalrez) for chlorine and other aggressive gases. (The meter is fitted with FPM/FFKM gasket only when configured with pressure sensor.)
Process connections	Flange norm DIN EN 1092-1 form B1/B2 or ANSI B16.5 RF. Other flanges on request (contact your local Siemens representative)
• Flange version	DN 15 … 300 (½ … 12")
• Sandwich version	DN 15 … 100 (½ … 4")
Degree of protection	IP66/IP67
Dimensions and weights	See “Dimensional Drawings”
Display and operating interface	
Local display	2 lines, 10 characters per line
Languages	German, English, French
Power supply	
• Standard version	14 … 36 V DC
• Ex version	14 … 30 V DC
Certificates and approvals	
Explosion protection	
• ATEX	II 2G EEx d ia [ia] IIC T6
• FM US/C	Class I, II, III, Div 1 & 2
Calibration	All flowmeters will be delivered with a 3 point calibration certificate
Material Certificate	Certificate of compliance, pressure test, material certificate, material in acc. of NACE and PMI of pressure bearing metal parts.
Cleaning	Choose Cleaning Class1 when fluid is oxygen or contains chloride.
Certificates	X-ray and dye penetration test on pressure bearing weldings

© Siemens 2020

Selection and ordering data

SITRANS FX300 Flanged Single transmitter and T_{max} = 240 °C (464 °F) ↗		Article No. 7ME2600-	Ord. Code
↗ Click on the Article No. for the online configuration in the PIA Life Cycle Portal.			
Sensor size	**Connection size**		
DN 15 (½")	DN 15 (½")	1 A	
	DN 25 (1")	1 B	
	DN 40 (1½")	1 C	
DN 25 (1")	DN 25 (1")	2 B	
	DN 40 (1½")	2 C	
	DN 50 (2")	2 D	
DN 40 (1½")	DN 40 (1½")	2 K	
	DN 50 (2")	2 L	
	DN 80 (3")	2 M	
DN 50 (2")	DN 50 (2")	2 R	
	DN 80 (3")	2 S	
	DN 100 (4")	2 T	
DN 80 (3")	DN 80 (3")	3 L	
	DN 100 (4")	3 M	
	DN 150 (6")	3 R	
DN 100 (4")	DN 100 (4")	3 S	
	DN 150 (6")	3 T	
	DN 200 (8")	3 Q	
DN 150 (6")	DN 150 (6")	4 M	
	DN 200 (8")	4 P	
	DN 250 (10")	4 Q	
DN 200 (8")	DN 200 (8")	4 T	
	DN 250 (10")	4 U	
	DN 300 (12")	4 V	
DN 250 (10")	DN 250 (10")	4 W	
	DN 300 (12")	4 Y	
DN 300 (12")	DN 300 (12")	5 E	
Flange norm and nominal pressure			
Form B1/B2	**EN 1092-1**		
PN 10	DN 200 ... 300	A	
PN 16	DN 50 ... 300	B	
PN 25	DN 200 ... 300	C	
PN 40	DN 15 ... 300	D	
PN 63	DN 50 ... 150	E	
PN 100	DN 15 ... 150	F	
RF	**ANSI B16.5**		
class 150	1½ ... 12"	J	
class 300	1½ ... 12"	K	
class 600	1½ ... 6"	L	
Sensor material/Gasket			
Stainless steel AISI 316L (1.4404)/AISI 316L (1.4435)/FPM		1	
Stainless steel AISI 316L (1.4404)/AISI 316L (1.4435)/FFKM		5	
Transmitter design			
Compact version - no cable		1	
Remote version			
5 m (16.4 ft)		2	
10 m (32.8 ft)		3	
15 m (49.2 ft)		4	

SITRANS FX300 Flanged Single transmitter and T_{max} = 240 °C (464 °F)	Article No. 7ME2600-	Ord. Code
Approval and cable gland		
Non-Ex, M20 x 1.5	1	
Non-Ex, ½" NPT	2	
FM approval Class 1 Div. 2, M20 x 1.5	3	
ATEX, M20 x 1.5	4	
ATEX, ½" NPT	5	
FM approval Class 1 Div. 1, M20 x 1.5	6	
FM approval Class 1 Div. 1, 1/2" NPT	7	
FM approval Class 1 Div. 2, 1/2" NPT	8	
Further approvals and cable glands		
IEC Ex with M20 x 1.5	9	N 0 A
IEC Ex with ½" NPT	9	N 0 B
Transmitter, display and communication		
With display, HART	A	
Pressure sensor and isolation valve		
Without pressure sensor	A	
With pressure sensor, range:		
• 4 bar (58 psi)	B	
• 6 bar (87 psi)	D	
• 10 bar (145 psi)	E	
• 16 bar (232 psi)	G	
• 25 bar (363 psi)	H	
• 40 bar (580 psi)	K	
• 60 bar (870 psi)	L	
• 100 bar (1450 psi)	N	
With isolation valve and pressure sensor, range:		
• 4 bar (58 psi)	P	
• 6 bar (87 psi)	Q	
• 10 bar (145 psi)	R	
• 16 bar (232 psi)	S	
• 25 bar (363 psi)	U	
• 40 bar (580 psi)	V	
• 60 bar (870 psi)	W	
• 100 bar (1450 psi)	Y	
Software		
Uncompensated for liquids and gases, density compensated by temperature for saturated steam	1	
Density compensation for superheated steam	4	
Density compensated by temperature and pressure for superheated steam, gross heat meter - setting of energy metering at option Y51 ... Y56	5	
Density compensation for gases, wet gases and mixed gases - setting of relative humidity at option Y49	7	
Density compensation for gases, wet gases and mixed gases, Free air delivery (FAD) - setting of FAD at option Y81 ... Y87 and relative humidity at option Y49	8	

© Siemens 2020

Selection and ordering data

	Order code
Additional information	
Please add "**-Z**" to Article No. and specify as minimum Order code Y40, Y41, Y42 and Y45 and plain text.	
Input process data	
Specify medium (liquid, gas, steam or customer-specific)	**Y40**
Temperature: Specify operating temperature with unit	**Y41**
Pressure: Specify operating pressure with unit	**Y42**
Density (only for customer-specified medium): Specify density with unit	**Y43**
Viscosity (only for customer-specified medium): Specify viscosity with unit	**Y44**
Flow rate: Specify max. flow rate with units	**Y45**
Setting of pulse output: Specify pulse value (meter factor) for totalized flow (1 pulse/unit)	**Y47**
Relative humidity of process medium in %	**Y49**
Settings of gross heat	
Variable current output: Flow rate, power	**Y51**
Power unit (specify: kJ/h, MJ/h, GJ/h, Btu/h, kcal/h, kW, MW or special (custom))	**Y52**
Fullscale value power	**Y53**
Variable pulse output: Totalized flow, energy	**Y54**
Totalizer on/off	**Y55**
Energy unit (specify: kJ, MJ, GJ, Btu th, kcal, kWh, MWh or special (custom))	**Y56**
Settings of FAD	
Inlet suction temperature[1)]	**Y81**
Atmospheric pressure[1)]	**Y82**
Pressure drop at inlet suction filter[2)]	**Y83**
Inlet relative humidity[1)]	**Y84**
Actual compressor rotation (rpm)[2)]	**Y85**
Rated compressor rotation (rpm)[2)]	**Y86**
Relative humidity at compressor outlet[2)]	**Y87**

1) Required information from customer.

2) Required information from compressor manufacturer (data sheet).

	Order code
Further designs	
Please add "**-Z**" to Article No. and specify Order code.	
Converter housing material	
Aluminum for increased requirement, color: petrol green	**A10**
Material certificate	
Certificate of compliance EN 10204-2.1	**C10**
Pressure test + 3.1 accordance EN 10204	**C11**
Material certificate of pressure bearing parts + certificate 3.1	**C12**
Material in accordance with NACE MR 0175-01	**C13**
PMI of pressure bearing metal parts + certificate 3.1	**C14**
Material certificate of pressure bearing parts + PMI + certificate 3.1	**C15**
Calibration certificate FX300	
As standard the flow device has a 3-point calibration certificate	
5-point calibration certificate	**D11**
Hardness test	
Hardness test on pressure bearing parts + certificate 3.1	**H30**
Cleaning	
Cleaning class 1	**K46**
Cleaning class 1 + certificate 3.1 acc. EN 10204	**K48**
Certificates	
X-ray test on pressure bearing weldings	**M56**
Dye penetration test on pressure bearing weldings	**M58**
Tag name plate	
Stainless steel tag with 3 mm characters, max. 2 x 8 characters (40 x 20 mm, add plain text)	**Y17**
Stainless steel tag with 2.5 mm characters, max. 8 x 40 characters (120 x 46 mm, add plain text)	**Y18**

© Siemens 2020

Selection and ordering data

Article No.

SITRANS FX300 Sandwich Single transmitter and T_{max} = 240 °C (464 °F) ↗		**7ME2700-**											Ord. Code
		■	■	■	■	■	-	■	■	■	■	■	■ ■ ■
↗ Click on the Article No. for the online configuration in the PIA Life Cycle Portal.													
Sensor size	**Connection size**												
DN 15 (½")	DN 15 (½")	1	A										
DN 25 (1")	DN 25 (1")	2	B										
DN 40 (1½")	DN 40 (1½")	2	K										
DN 50 (2")	DN 50 (2")	2	R										
DN 80 (3")	DN 80 (3")	3	L										
DN 100 (4")	DN 100 (4")	3	S										
Nominal pressure													
Form B1/B2	**EN 1092-1**												
PN 16	DN 50 ... 300			B									
PN 40	DN 15 ... 300			D									
PN 63	DN 50 ... 150			E									
PN 100	DN 15 ... 150			F									
RF	**ANSI B16.5**												
class 150	1½ ... 4"			J									
class 300	1½ ... 4"			K									
class 600	1½ ... 4"			L									
Sensor material/Gasket													
Stainless steel AISI 316L (1.4404)/AISI 316L (1.4435)/FPM					1								
Stainless steel AISI 316L (1.4404)/AISI 316L (1.4435)/FFKM					5								
Transmitter design													
Compact version - no cable						1							
Remote version													
5 m (16.4 ft)						2							
10 m (32.8 ft)						3							
15 m (49.2 ft)						4							
Approval and cable gland													
Non-Ex, M20 x 1.5								1					
Non-Ex, ½" NPT								2					
FM approval Class 1 Div. 2, M20 x 1.5								3					
ATEX, M20 x 1.5								4					
ATEX, ½" NPT								5					
FM approval Class 1 Div. 1, M20 x 1.5								6					
FM approval Class 1 Div. 1, 1/2" NPT								7					
FM approval Class 1 Div. 2, 1/2" NPT								8					
Further approvals and cable glands													
IEC Ex with M20 x 1.5								9				N	0 A
IEC Ex with ½" NPT								9				N	0 B
Transmitter, display and communication													
With display, HART									A				

Article No.

SITRANS FX300 Sandwich Single transmitter and T_{max} = 240 °C (464 °F)	**7ME2700-**											Ord. Code
	■	■	■	■	■	-	■	■	■	■	■	■ ■ ■
Pressure sensor and isolation valve												
Without pressure sensor									A			
With pressure sensor, range:												
• 4 bar (58 psi)									B			
• 6 bar (87 psi)									D			
• 10 bar (145 psi)									E			
• 16 bar (232 psi)									G			
• 25 bar (363 psi)									H			
• 40 bar (580 psi)									K			
• 60 bar (870 psi)									L			
• 100 bar (1450 psi)									N			
With isolation valve and pressure sensor, range:												
• 4 bar (58 psi)									P			
• 6 bar (87 psi)									Q			
• 10 bar (145 psi)									R			
• 16 bar (232 psi)									S			
• 25 bar (363 psi)									U			
• 40 bar (580 psi)									V			
• 60 bar (870 psi)									W			
• 100 bar (1450 psi)									Y			
Software												
Uncompensated for liquids and gases, density compensated by temperature for saturated steam										1		
Density compensation for superheated steam										4		
Density compensated by temperature and pressure for superheated steam, gross heat meter - setting of energy metering at option Y51 ... Y56										5		
Density compensation for gases, wet gases and mixed gases - setting of relative humidity at option Y49										7		
Density compensation for gases, wet gases and mixed gases, Free air delivery (FAD) - setting of FAD at option Y81 ... Y87 and relative humidity at option Y49										8		

© Siemens 2020

Selection and ordering data

	Order code
Additional information	
Please add "**-Z**" to Article No. and specify as minimum Order code Y40, Y41, Y42 and Y45 and plain text.	
Input process data	
Specify medium (liquid, gas, steam or customer-specific)	**Y40**
Temperature: Specify operating temperature with unit	**Y41**
Pressure: Specify operating pressure with unit	**Y42**
Density (only for customer-specified medium): Specify density with unit	**Y43**
Viscosity (only for customer-specified medium): Specify viscosity with unit	**Y44**
Flow rate: Specify max. flow rate with units	**Y45**
Setting of pulse output: Specify pulse value (meter factor) for totalized flow (1 pulse/unit)	**Y47**
Relative humidity of process medium in %	**Y49**
Settings of gross heat	
Variable current output: Flow rate, power	**Y51**
Power unit (specify: kJ/h, MJ/h, GJ/h, Btu/h, kcal/h, kW, MW or special (custom))	**Y52**
Fullscale value power	**Y53**
Variable pulse output: Totalized flow, energy	**Y54**
Totalizer on/off	**Y55**
Energy unit (specify: kJ, MJ, GJ, Btu th, kcal, kWh, MWh or special (custom))	**Y56**
Settings of FAD	
Inlet suction temperature[1)]	**Y81**
Atmospheric pressure[1)]	**Y82**
Pressure drop at inlet suction filter[2)]	**Y83**
Inlet relative humidity[1)]	**Y84**
Actual compressor rotation (rpm)[2)]	**Y85**
Rated compressor rotation (rpm)[2)]	**Y86**
Relative humidity at compressor outlet[2)]	**Y87**

[1)] Required information from customer.

[2)] Required information from compressor manufacturer (data sheet).

	Order code
Further designs	
Please add "**-Z**" to Article No. and specify Order code.	
Converter housing material	
Aluminum for increased requirement, color: petrol green	**A10**
Material certificate	
Certificate of compliance EN 10204-2.1	**C10**
Pressure test + 3.1 accordance EN 10204	**C11**
Material certificate of pressure bearing parts + certificate 3.1	**C12**
Material in accordance with NACE MR 0175-01	**C13**
PMI of pressure bearing metal parts + certificate 3.1	**C14**
Material certificate of pressure bearing parts + PMI + certificate 3.1	**C15**
Calibration certificate FX300	
As standard the flow device has a 3-point calibration certificate	
5-point calibration certificate	**D11**
Hardness test	
Hardness test on pressure bearing parts + certificate 3.1	**H30**
Cleaning	
Cleaning class 1	**K46**
Cleaning class 1 + certificate 3.1 acc. EN 10204	**K48**
Certificates	
X-ray test on pressure bearing weldings	**M56**
Dye penetration test on pressure bearing weldings	**M58**
Tag name plate	
Stainless steel tag with 3 mm characters, max. 2 x 8 characters (40 x 20 mm, add plain text)	**Y17**
Stainless steel tag with 2.5 mm characters, max. 8 x 40 characters (120 x 46 mm, add plain text)	**Y18**

© Siemens 2020

Selection and ordering data

		Article No.													Order code
SITRANS FX300 Sandwich Dual transmitter and T_{max} = 240 °C (464 °F) ↗		**7ME2700-**												Ord. Code	
↗ Click on the Article No. for the online configuration in the PIA Life Cycle Portal.		■	■	■	■	■	-	■	■	■	■		■	■	
Sensor size	**Connection size**														
DN 40 (1½")	DN 40 (1½")	**2**	**K**												
DN 50 (2")	DN 50 (2")	**2**	**R**												
DN 80 (3")	DN 80 (3")	**3**	**L**												
DN 100 (4")	DN 100 (4")	**3**	**S**												
DN 150 (6")	DN 150 (6")	**4**	**M**												
DN 200 (8")	DN 200 (8")	**4**	**T**												
DN 250 (10")	DN 250 (10")	**4**	**W**												
DN 300 (12")	DN 300 (12")	**5**	**E**												
Flange norm and nominal pressure															
Form B1/B2	**EN 1092-1**														
PN 10	DN 200 ... 300			**A**											
PN 16	DN 50 ... 300			**B**											
PN 25	DN 200 ... 300			**C**											
PN 40	DN 40 ... 300			**D**											
PN 63	DN 50 ... 150			**E**											
PN 100	DN 40 ... 150			**F**											
RF	**ANSI B16.5**														
class 150	1½ ... 12"			**J**											
class 300	1½ ... 12"			**K**											
class 600	1½ ... 6"			**L**											
Sensor material/Gasket															
Stainless steel AISI 316L (1.4404)/AISI 316L (1.4435)/FPM					**1**										
Stainless steel AISI 316L (1.4404)/AISI 316L (1.4435)/FFKM					**5**										
Transmitter design															
Compact version - no cable						**1**									
Remote version															
5 m (16.4 ft)						**2**									
10 m (32.8 ft)						**3**									
15 m (49.2 ft)						**4**									
Approval and cable gland															
Non-Ex, M20 x 1.5								**1**							
Non-Ex, ½" NPT								**2**							
FM approval Class 1 Div. 2, M20 x 1.5								**3**							
ATEX, M20 x 1.5								**4**							
ATEX, ½" NPT								**5**							
FM approval Class 1 Div. 1, M20 x 1.5								**6**							
FM approval Class 1 Div. 1, 1/2" NPT								**7**							
FM approval Class 1 Div. 2, 1/2" NPT								**8**							
Further approvals and cable glands															
IEC Ex with M20 x 1.5								**9**					**N**	**0**	**A**
IEC Ex with ½" NPT								**9**					**N**	**0**	**B**
Transmitter, display and communication															
With display, HART									**A**						
Pressure sensor and isolation valve															
Without pressure sensor										**A**					
Software															
Uncompensated for liquids and gases, density-compensated by temperature for saturated steam											**1**				

	Order code
Additional information	
Please add "**-Z**" to Article No. and specify as minimum Order code Y40, Y41, Y42 and Y45 and plain text.	
Input process data	
Specify medium (liquid, gas, steam or customer-specific)	**Y40**
Temperature: Specify operating temperature with unit	**Y41**
Pressure: Specify operating pressure with unit	**Y42**
Density (only for customer-specified medium): Specify density with unit	**Y43**
Viscosity (only for customer-specified medium): Specify viscosity with unit	**Y44**
Flow rate: Specify max. flow rate with units	**Y45**
Setting of pulse output: Specify pulse value (meter factor) for totalized flow (1 pulse/unit)	**Y47**
Relative humidity of process medium in %	**Y49**
Further designs	
Please add "**-Z**" to Article No. and specify Order code.	
Converter housing material	
Aluminum for increased requirement, color: petrol green	**A10**
Material certificate	
Certificate of compliance EN 10204-2.1	**C10**
Pressure test + 3.1 accordance EN 10204	**C11**
Material certificate of pressure bearing parts + certificate 3.1	**C12**
Material in accordance with NACE MR 0175-01	**C13**
PMI of pressure bearing metal parts + certificate 3.1	**C14**
Material certificate of pressure bearing parts + PMI + certificate 3.1	**C15**
Calibration certificate FX300	
As standard the flow device has a 3-point calibration certificate	
5-point calibration certificate	**D11**
Hardness test	
Hardness test on pressure bearing parts + certificate 3.1	**H30**
Cleaning	
Cleaning class 1	**K46**
Cleaning class 1 + certificate 3.1 acc. EN 10204	**K48**
Certificates	
X-ray test on pressure bearing weldings	**M56**
Dye penetration test on pressure bearing weldings	**M58**
Tag name plate	
Stainless steel tag with 3 mm characters, max. 2 x 8 characters (40 x 20 mm, add plain text)	**Y17**
Stainless steel tag with 2.5 mm characters, max. 8 x 40 characters (120 x 46 mm, add plain text)	**Y18**

© Siemens 2020

Selection and ordering data (continued)

Operating instructions for SITRANS FX300

Description	Article No.
• English	**A5E2100423**
• German	**A5E02171807**

All literature is available to download for free, in a range of languages, at
http://www.siemens.com/processinstrumentation/documentation

Spare parts for SITRANS FX300

Description	Article No.	
Electronic • Basic D-HART • Steam D-HART • Gas D-HART Serial number of flow meter must be specified on order.	 **A5E02181531** **A5E02181541** **A5E02181544**	
Display	**A5E02181558**	
Sensor replacement (incl. seal disc, pickup, O-rings for pickup, and pressure screw) • DN 15 (incl. ½" socket) • DN 25 (incl. 1" socket) • DN 40 ... 100 • DN 150 ... 300	 **KRH-16111100** **KRH-16111150** **KRH-16111200** **KRH-16111300**	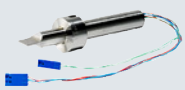
Pressure sensor replacement (incl. pressure sensor, DUBOX plug, 2 O-rings and calibration certificate) • 4 bar (58 psi) • 6 bar (87 psi) • 10 bar (145 psi) • 16 bar (232 psi) • 25 bar (363 psi) • 40 bar (580 psi) • 60 bar (870 psi) • 100 bar (1450 psi)	 **A5E02181157** **A5E02181175** **A5E02181180** **A5E02181221** **A5E02181307** **A5E02181316** **A5E02181322** **A5E02181437**	
Service Toolbox for programming software (basic, steam and gas); for changing settings and diagnostics Note: Dedicated service training is required. Please contact Customer Support.	**A5E02375819**	
Connection cable for remote mounting • 15 m (49 ft)	 **A5E36832003**	

Dimensional drawings

Compact version

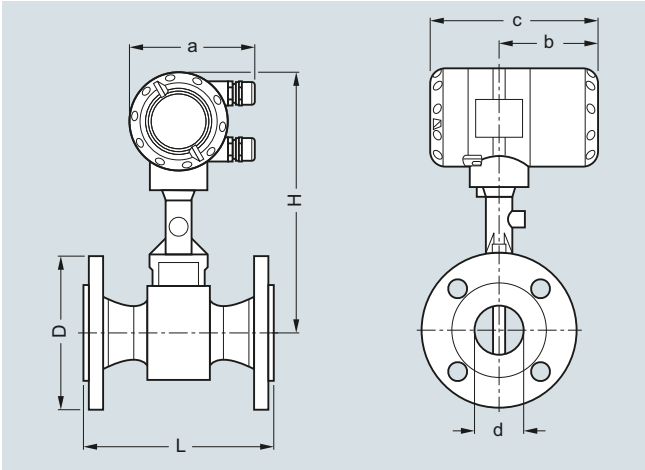

Flange version

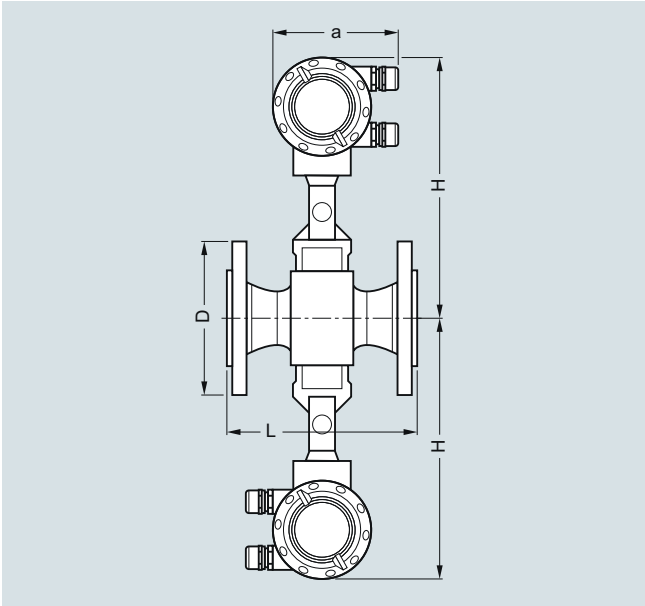

Flange version, dual converter

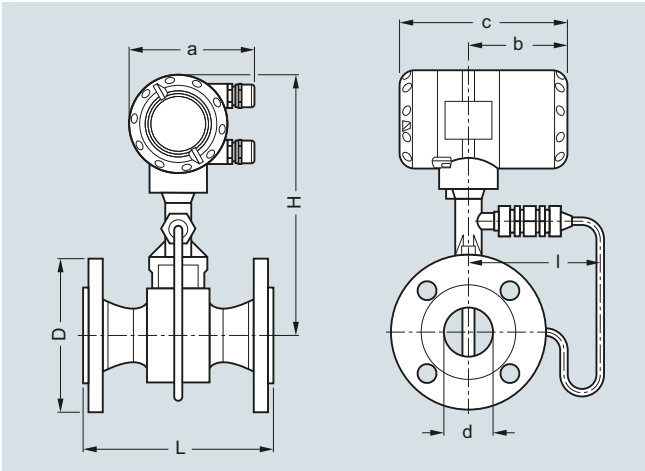

Flange version with pressure sensor

© Siemens 2020

Dimensional drawings (continued)

Flange version DIN EN 1092-1

Size	Pressure rating	Dimensions [mm (inch)] a = 135 (5.32), b = 108 (4.26), c = 184 (7.25)							Weight [kg (lb)][1]	
DN	PN	d	d FR[2]	d FR[3]	D	L	H	I	Flowmeter (without pressure sensor)	Flowmeter (with pressure sensor)
15	40	17.3 (0.68)	-	-	95 (3.74)	200 (7.87)	315 (12.40)	144 (5.67)	5.5 (12.13)	6.1 (13.45)
15	100	17.3 (0.68)	-	-	105 (4.13)	200 (7.87)	315 (12.40)	144 (5.67)	6.5 (14.33)	7.1 (15.65)
25	40	28.5 (1.12)	17.3 (0.68)	-	115 (4.53)	200 (7.87)	315 (12.40)	144 (5.67)	7.3 (16.09)	7.9 (17.42)
25	100	28.5 (1.12)	17.3 (0.68)	-	140 (5.51)	200 (7.87)	315 (12.40)	144 (5.67)	9.3 (20.50)	9.9 (21.83)
40	40	43.1 (1.70)	28.5 (1.12)	17.3 (0.68)	150 (5.91)	200 (7.87)	320 (12.60)	144 (5.67)	10.2 (22.49)	10.8 (23.81)
40	100	42.5 (1.67)	28.5 (1.12)	17.3 (0.68)	170 (6.69)	200 (7.87)	320 (12.60)	144 (5.67)	14.2 (31.31)	14.8 (32.63)
50	16	54.5 (2.15)	42.5 (1.67)	28.5 (1.12)	165 (6.50)	200 (7.87)	325 (12.80)	144 (5.67)	12.1 (26.68)	12.7 (28.00)
50	40	54.5 (2.15)	42.5 (1.67)	28.5 (1.12)	165 (6.50)	200 (7.87)	325 (12.80)	144 (5.67)	12.3 (27.12)	12.9 (28.44)
50	63	54.5 (2.15)	42.5 (1.67)	28.5 (1.12)	180 (7.09)	200 (7.87)	325 (12.80)	144 (5.67)	16.3 (35.94)	16.9 (37.26)
50	100	53.9 (2.12)	42.5 (1.67)	28.5 (1.12)	195 (7.68)	200 (7.87)	325 (12.80)	144 (5.67)	17.8 (39.24)	18.4 (40.57)
80	16	82.5 (3.25)	54.5 (2.15)	42.5 (1.67)	200 (7.87)	200 (7.87)	340 (13.39)	154 (6.06)	16.8 (37.04)	17.4 (38.36)
80	40	82.5 (3.25)	54.5 (2.15)	42.5 (1.67)	200 (7.87)	200 (7.87)	340 (13.39)	154 (6.06)	18.8 (41.45)	19.4 (42.77)
80	63	81.7 (3.22)	54.5 (2.15)	42.5 (1.67)	215 (8.46)	200 (7.87)	340 (13.39)	154 (6.06)	22.8 (50.27)	23.4 (51.59)
80	100	80.9 (3.19)	54.5 (2.15)	42.5 (1.67)	230 (9.06)	200 (7.87)	340 (13.39)	154 (6.06)	26.8 (59.08)	27.4 (60.41)
100	16	107.1 (4.22)	80.9 (3.19)	54.5 (2.15)	220 (8.66)	250 (9.84)	360 (14.17)	164 (6.46)	21.4 (47.18)	22 (48.50)
100	40	107.1 (4.22)	80.9 (3.19)	54.5 (2.15)	235 (9.25)	250 (9.84)	360 (14.17)	164 (6.46)	24.4 (53.79)	25 (55.12)
100	63	106.3 (4.19)	80.9 (3.19)	54.5 (2.15)	250 (9.84)	250 (9.84)	360 (14.17)	164 (6.46)	29.4 (64.82)	30 (66.14)
100	100	104.3 (4.11)	80.9 (3.19)	54.5 (2.15)	265 (10.43)	250 (9.84)	360 (14.17)	164 (6.46)	35.4 (78.04)	36 (79.37)
150	16	159.3 (6.27)	107.1 (4.22)	80.9 (3.19)	285 (11.22)	300 (11.81)	375 (14.76)	174 (6.85)	35.2 (77.60)	35.8 (78.93)
150	40	159.3 (6.27)	107.1 (4.22)	80.9 (3.19)	300 (11.81)	300 (11.81)	375 (14.76)	174 (6.85)	41.2 (90.83)	41.8 (92.15)
150	63	157.1 (6.19)	107.1 (4.22)	80.9 (3.19)	345 (13.58)	300 (11.81)	375 (14.76)	174 (6.85)	59.2 (130.51)	59.8 (131.84)
150	100	154.1 (6.07)	107.1 (4.22)	80.9 (3.19)	355 (13.98)	300 (11.81)	375 (14.76)	174 (6.85)	67.2 (148.15)	67.8 (149.47)
200	10	206.5 (8.13)	159.3 (6.27)	107.1 (4.22)	340 (13.39)	300 (11.81)	400 (15.75)	194 (7.64)	37.8 (83.33)	38.4 (84.66)
200	16	206.5 (8.13)	159.3 (6.27)	107.1 (4.22)	340 (13.39)	300 (11.81)	400 (15.75)	194 (7.64)	37.8 (83.33)	38.4 (84.66)
200	25	206.5 (8.13)	159.3 (6.27)	107.1 (4.22)	360 (14.17)	300 (11.81)	400 (15.75)	194 (7.64)	46.8 (103.18)	47.4 (104.50)
200	40	206.5 (8.13)	159.3 (6.27)	107.1 (4.22)	375 (14.76)	300 (11.81)	400 (15.75)	194 (7.64)	54.8 (120.81)	55.4 (122.14)
250	10	260.4 (10.25)	206.5 (8.13)	159.3 (6.27)	395 (15.55)	380 (14.96)	420 (16.54)	224 (8.82)	57.4 (126.55)	58.0 (127.87)
250	16	260.4 (10.25)	206.5 (8.13)	159.3 (6.27)	405 (15.94)	380 (14.96)	420 (16.54)	224 (8.82)	58.4 (128.75)	59.0 (130.07)
250	25	258.8 (10.19)	206.5 (8.13)	159.3 (6.27)	425 (16.73)	380 (14.96)	420 (16.54)	224 (8.82)	74.4 (164.02)	75.0 (165.35)
250	40	258.8 (10.19)	206.5 (8.13)	159.3 (6.27)	450 (17.72)	380 (14.96)	420 (16.54)	224 (8.82)	92.4 (203.71)	93.0 (205.03)
300	10	309.7 (12.19)	260.4 (10.25)	206.5 (8.13)	445 (17.52)	450 (17.72)	445 (17.52)	244 (9.61)	75.7 (166.89)	76.3 (168.21)
300	16	309.7 (12.19)	260.4 (10.25)	206.5 (8.13)	460 (18.11)	450 (17.72)	445 (17.52)	244 (9.61)	82.2 (181.22)	82.8 (182.54)
300	25	307.9 (12.12)	260.4 (10.25)	206.5 (8.13)	485 (19.09)	450 (17.72)	445 (17.52)	244 (9.61)	98.7 (217.60)	99.3 (218.92)
300	40	307.9 (12.12)	260.4 (10.25)	206.5 (8.13)	515 (20.28)	450 (17.72)	445 (17.52)	244 (9.61)	127.5 (281.09)	128.1 (282.41)

1) For dual converter: specified weight + 2.80 kg (6.17 lb).
2) FR - single reduction
3) F2R - double reduction

© Siemens 2020

Dimensional drawings (continued)

Flange version ANSI B16.5

Size	Pressure rating	Dimensions [mm (inch)] a = 135 (5.32), b = 108 (4.26), c = 184 (7.25)							Weight [kg (lb)][1]	
DN	Class	d	d FR[2]	d FR[3]	D	L	H	I	Flowmeter (without pressure sensor)	Flowmeter (with pressure sensor)
½	150	15.8 (0.62)	-	-	90 (3.54)	200 (7.87)	315 (12.40)	144 (5.67)	4.5 (9.92)	5.1 (11.24)
½	300	15.8 (0.62)	-	-	95 (3.74)	200 (7.87)	315 (12.40)	144 (5.67)	4.9 (10.80)	5.5 (12.13)
½	600	13.9 (0.55)	-	-	95 (3.74)	200 (7.87)	315 (12.40)	144 (5.67)	5.1 (11.24)	5.7 (12.57)
1	150	26.6 (1.05)	15.8 (0.62)	-	110 (4.33)	200 (7.87)	315 (12.40)	144 (5.67)	6.2 (13.67)	6.8 (14.99)
1	300	26.6 (1.05)	15.8 (0.62)	-	125 (4.92)	200 (7.87)	315 (12.40)	144 (5.67)	7.2 (15.87)	7.8 (17.20)
1	600	24.3 (0.96)	15.8 (0.62)	-	125 (4.92)	200 (7.87)	315 (12.40)	144 (5.67)	7.5 (16.53)	8.1 (17.86)
1½	150	40.9 (1.61)	26.6 (1.05)	15.8 (0.62)	125 (4.92)	200 (7.87)	320 (12.60)	144 (5.67)	8.3 (18.30)	8.9 (19.62)
1½	300	40.9 (1.61)	26.6 (1.05)	15.8 (0.62)	155 (6.10)	200 (7.87)	320 (12.60)	144 (5.67)	10.4 (22.93)	11 (24.25)
1½	600	38.1 (1.50)	26.6 (1.05)	15.8 (0.62)	155 (6.10)	200 (7.87)	320 (12.60)	144 (5.67)	11.4 (25.13)	12 (26.46)
2	150	52.6 (2.07)	40.9 (1.61)	26.6 (1.05)	150 (5.91)	200 (7.87)	325 (12.80)	144 (5.67)	11 (24.25)	11.6 (25.57)
2	300	52.6 (2.07)	40.9 (1.61)	26.6 (1.05)	165 (6.50)	200 (7.87)	325 (12.80)	144 (5.67)	12.4 (27.34)	13 (28.66)
2	600	49.3 (1.94)	40.9 (1.61)	26.6 (1.05)	165 (6.50)	200 (7.87)	325 (12.80)	144 (5.67)	13.9 (30.64)	14.5 (31.97)
3	150	78 (3.07)	52.6 (2.07)	40.9 (1.61)	190 (7.48)	200 (7.87)	340 (13.39)	154 (6.06)	19.8 (43.65)	20.4 (44.97)
3	300	78 (3.07)	52.6 (2.07)	40.9 (1.61)	210 (8.27)	200 (7.87)	340 (13.39)	154 (6.06)	22.8 (50.27)	23.4 (51.59)
3	600	73.7 (2.90)	52.6 (2.07)	40.9 (1.61)	210 (8.27)	200 (7.87)	340 (13.39)	154 (6.06)	23.8 (52.47)	24.4 (53.79)
4	150	102.4 (4.03)	78 (3.07)	52.6 (2.07)	230 (9.06)	250 (9.84)	360 (14.17)	164 (6.46)	23.4 (51.59)	24 (52.91)
4	300	102.4 (4.03)	78 (3.07)	52.6 (2.07)	255 (10.04)	250 (9.84)	360 (14.17)	164 (6.46)	31.4 (69.23)	32 (70.55)
4	600	97.2 (3.83)	78 (3.07)	52.6 (2.07)	275 (10.83)	250 (9.84)	360 (14.17)	164 (6.46)	40.4 (89.07)	41 (90.39)
6	150	154.2 (6.07)	102.4 (4.03)	78 (3.07)	280 (11.02)	300 (11.81)	375 (14.76)	174 (6.85)	36.2 (79.81)	36.8 (81.13)
6	300	154.2 (6.07)	102.4 (4.03)	78 (3.07)	320 (12.60)	300 (11.81)	375 (14.76)	174 (6.85)	51.2 (112.88)	51.8 (114.20)
6	600	146.3 (5.76)	102.4 (4.03)	78 (3.07)	355 (13.98)	300 (11.81)	375 (14.76)	174 (6.85)	76.2 (157.99)	76.8 (169.31)
8	150	202.7 (7.98)	154.2 (6.07)	102.4 (4.03)	345 (13.58)	300 (11.81)	400 (15.75)	194 (7.64)	50.0 (110.23)	50.6 (111.55)
8	300	202.7 (7.98)	154.2 (6.07)	102.4 (4.03)	380 (14.96)	300 (11.81)	400 (15.75)	194 (7.64)	74.8 (164.91)	75.4 (166.23)
10	150	254.5 (10.02)	202.7 (7.98)	154.2 (6.07)	405 (15.94)	380 (14.96)	420 (16.54)	224 (8.82)	74.4 (164.02)	75.0 (165.35)
10	300	254.5 (10.02)	202.7 (7.98)	154.2 (6.07)	455 (17.91)	380 (14.96)	420 (16.54)	224 (8.82)	106.4 (234.57)	107.0 (235.89)
12	150	304.8 (12.00)	254.5 (10.02)	202.7 (7.98)	485 (19.09)	450 (17.72)	445 (17.52)	244 (9.61)	106.3 (234.35)	106.9 (235.67)
12	300	304.8 (12.00)	254.5 (10.02)	202.7 (7.98)	520 (20.47)	450 (17.72)	445 (17.52)	244 (9.61)	151.3 (333.56)	151.9 (334.88)

1) For dual converter: specified weight + 2.80 kg (6.17 lb)
2) FR - single reduction
3) F2R - double reduction

© Siemens 2020

Dimensional drawings (continued)

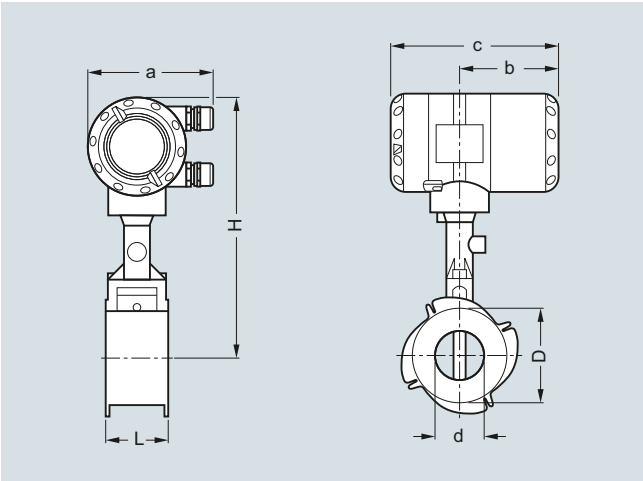

Sandwich version

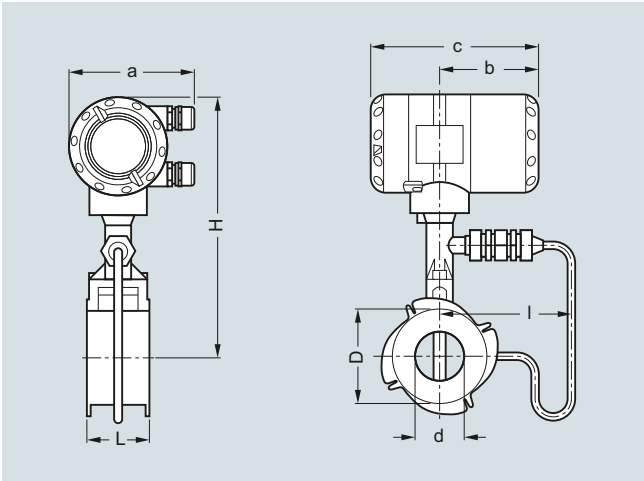

Sandwich version with pressure sensor

Sandwich version EN

Size	Pressure rating	Dimensions [mm (inch)]								Weight [kg (lb)]	
DN	PN	a	b	c	d	D	L	H	I	Flowmeter (without pressure sensor)	Flowmeter (with pressure sensor)
15	16 ... 100	133 (5.24)	105 (4.13)	179 (7.05)	16 (0.63)	45 (1.77)	65 (2.56)	265 (10.43)	144 (5.67)	3.5 (7.72)	4.1 (9.04)
25	16 ... 100	133 (5.24)	105 (4.13)	179 (7.05)	24 (0.94)	65 (2.56)	65 (2.56)	265 (10.43)	144 (5.67)	4.3 (9.48)	4.9 (10.80)
40	16 ... 100	133 (5.24)	105 (4.13)	179 (7.05)	38 (1.50)	82 (3.23)	65 (2.56)	270 (10.63)	144 (5.67)	4.9 (10.80)	5.5 (12.13)
50	16 ... 100	133 (5.24)	105 (4.13)	179 (7.05)	50 (1.97)	102 (4.02)	65 (2.56)	275 (10.83)	144 (5.67)	6 (13.23)	6.6 (14.55)
80	16 ... 100	133 (5.24)	105 (4.13)	179 (7.05)	74 (2.91)	135 (5.31)	65 (2.56)	290 (11.42)	155 (6.10)	8.2 (18.08)	8.8 (19.40)
100	16 ... 100	133 (5.24)	105 (4.13)	179 (7.05)	97 (3.82)	158 (6.22)	65 (2.56)	310 (12.20)	164 (6.46)	9.5 (20.94)	10.1 (22.27)

Sandwich version ANSI

Size	Pressure rating	Dimensions [mm (inch)]								Weight [kg (lb)]	
DN	Class	a	b	c	d	D	L	H	I	Flowmeter (without pressure sensor)	Flowmeter (with pressure sensor)
½"	150, 300, 600	5.24	4.13	7.05	0.63	1.77	2.56	10.43	5.67	7.72	9.04
1"	150, 300, 600	5.24	4.13	7.05	0.94	2.56	2.56	10.43	5.67	9.48	10.80
1½"	150, 300, 600	5.24	4.13	7.05	1.50	3.23	2.56	10.63	5.67	10.80	12.13
2"	150, 300, 600	5.24	4.13	7.05	1.97	4.02	2.56	10.83	5.67	13.23	14.55
3"	150, 300, 600	5.24	4.13	7.05	2.91	5.31	2.56	11.42	6.10	18.08	19.4
4"	150, 300, 600	5.24	4.13	7.05	3.82	6.22	2.56	12.20	6.46	20.94	22.27

© Siemens 2020

Dimensional drawings (continued)

Remote version

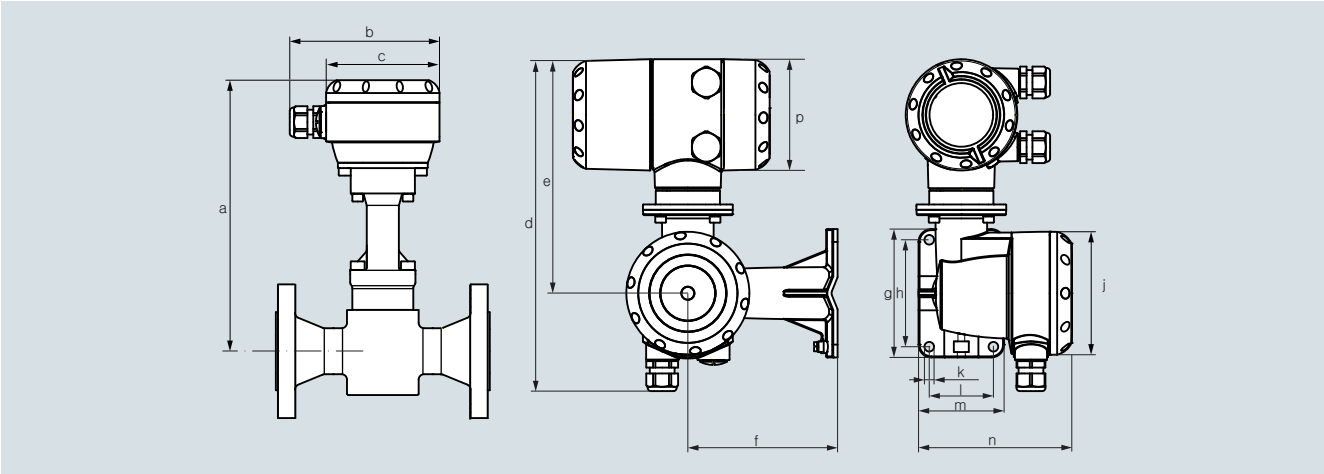

Flanged version

DN	15	25	40	50	80	100	150	200	250	300
	½"	1"	1½"	2"	3"	4"	6"	8"	10"	12"
	a									
[mm]	248	248	253	258	273	293	308	333	353	378
[inch]	9.77	9.77	9.97	10.2	10.8	11.5	12.1	13.1	13.9	14.9

	b	c	d	e	f	g	h	j	k	l	m	n	p
[mm]	140	Ø106	310	219	140	120	100	Ø115	Ø9 (4x)	60	80	144	104
[inch]	5.52	Ø4.18	12.2	8.63	5.52	4.73	3.94	Ø4.53	Ø0.36 (4x)	2.36	3.15	5.67	4.09

Sandwich version

DN	15	25	40	50	80	100
	½"	1"	1½"	2"	3"	4"
	a					
[mm]	248	248	253	258	273	293
[inch]	9.77	9.77	9.97	10.2	10.8	11.5

	b	c	d	e	f	g	h	j	k	l	m	n	p
[mm]	140	Ø106	310	219	140	120	100	Ø115	Ø9 (4x)	60	80	144	104
[inch]	5.52	Ø4.18	12.2	8.63	5.52	4.73	3.94	Ø4.53	Ø0.36 (4x)	2.36	3.15	5.67	4.09

© Siemens 2020

Dimensional drawings (continued)

Flow tables

Measuring Range Limits

Water

Size DN to EN 1092-1	DN to NSI B16.5	Q_{min} EN 1092-1 [m³/h]	Q_{max} EN 1092-1 [m³/h]	Q_{min} ANSI B16.5 [m³/h]	Q_{max} ANSI B16.5 [m³/h]
15	½"	0.45	5.07	0.44	4.94
25	1"	0.81	11.40	0.81	11.40
40	1½"	2.04	28.58	2.04	28.58
50	2"	3.53	49.48	3.53	49.48
80	3"	7.74	108.37	7.74	108.37
100	4"	13.30	186.22	13.30	186.21
150	6"	30.13	421.86	30.13	421.86
200	8"	56.60	792.42	56.60	792.42
250	10"	90.48	1 266.8	90.48	1 266.8
300	12"	131.41	1 839.8	131.41	1 839.8

Values based on water at 20 °C (68 °F)

Air

Size DN to EN 1092-1	DN to ANSI B16.5	Q_{min} EN 1092-1 [m³/h]	Q_{max} EN 1092-1 [m³/h]	Q_{min} ANSI B16.5 [m³/h]	Q_{max} ANS B16.5 [m³/h]
15	½"	6.80	25.33	6.72	24.70
25	1"	10.20	81.43	10.20	81.43
40	1½"	25.35	326.63	25.35	326.63
50	2"	43.89	565.49	43.89	565.49
80	3"	96.14	1 238.64	96.14	1 238.6
100	4"	165.19	2 128.27	165.19	2 128.27
150	6"	374.23	4 821.60	374.23	4 821.6
200	8"	702.95	9 056.8	702.95	9 056.8
250	10"	1 123.7	14 478.0	1 123.7	14 478.0
300	12"	1 632.1	21 028.0	1 632.1	21 028.0

Values based on air at 20 °C (68 °F) and 1.013 bar_{abs} (14.7 psi_{abs})

Flow rate limits

Product	Nominal sizes to EN	 to ANSI	Minimum flow rates [m/s]	Maximum flow rates [m/s]
Liquids	DN 15 … 300	DN ½" … 12"	$0.5 \times (998/\rho)^{0.51)}$	$7 \times (998/\rho)^{0.47\ 1)}$
Gas, steam/vapor	DN 15 … 300	DN ½" … 12"	$6 \times (1.29/\rho)^{0.52)}$	$7 \times (998/\rho)^{0.47\ 3)}$

ρ = operating density [kg/m³]

1) Minimum flow rate 0.3 m/s (0.984 ft/s) - maximum flow rate 7 m/s (23 ft/s)
2) Minimum flow rate 2 m/s (6.6 ft/s)
3) Maximum flow rate 80 m/s (262 ft/s); DN 15: 45 m/s (148 ft/s) and DN 25: 70 m/s (230 ft/s)

© Siemens 2020

Dimensional drawings (continued)

Measuring range saturated steam: 1 to 7 bar

Overpressure [bar]		**1**		**3.5**		**5.2**		**7**	
Density [kg/m³]		**1.13498**		**2.4258**		**3.27653**		**4.16732**	
Temperature [°C]		**120.6**		**148.2**		**160.4**		**170.6**	
Flow [kg/h]		**min.**	**max.**	**min.**	**max.**	**min.**	**max.**	**min.**	**max.**
DN to EN 1092-1	**DN to ASME B16.5**								
15	½"	5.87	28.75	7.68	61.46	8.93	83.01	10.06	105.57
25	1"	11.82	92.42	17.28	197.53	20.09	266.81	22.66	339.35
40	1½"	29.64	370.71	43.33	792.33	50.63	1 070.2	56.80	1 361.2
50	2"	51.31	641.82	75.02	1 371.8	87.19	1 852.8	98.33	2 356.6
80	3"	112.41	1 405.8	164.33	3 004.7	191.00	4 058.4	215.39	5 161.8
100	4"	193.14	2 415.5	282.36	5 162.7	328.16	6 973.3	370.09	8 869.2
150	6"	437.56	5 472.4	639.69	11 696.0	743.45	15 798.0	838.44	20 093.0
200	8"	821.9	10 279.0	1 201.6	21 970.0	1 396.5	29 675.0	1 574.9	37 743.0
250	10"	1 313.9	16 433.0	1 920.9	35 122.0	2 232.5	47 439.0	2 517.7	60 337.0
300	12"	1 908.3	23 866.0	2 789.8	51 010.0	3 242.4	68 899.0	3 656.6	87 630.0

Measuring range saturated steam: 10.5 … 20 bar

Overpressure [bar]		**10.5**		**14.0**		**17.5**		**20.0**	
Density [kg/m³]		**5.88803**		**7.60297**		**9.31702**		**10.5442**	
Temperature [°C]		**186.2**		**198.5**		**208.7**		**215.0**	
Flow [kg/h]		**min.**	**max.**	**min.**	**max.**	**min.**	**max.**	**min.**	**max.**
DN to EN 1092-1	**DN to ANSI B16.5**								
15	½"	12.78	149.17	16.51	192.61	20.23	236.04	22.89	267.12
25	1"	26.93	479.46	30.60	619.11	33.87	758.69	36.04	858.62
40	1½"	67.51	1 878.2	76.72	2 150.7	84.93	2 395.3	90.35	2 557.7
50	2"	116.89	3 251.7	132.82	3 723.4	147.03	4 147.0	156.42	4 428.1
80	3"	256.03	7 122.4	290.93	8 155.8	322.06	9 083.7	342.62	9 699.3
100	4"	439.91	12 238	499.90	14 013.0	553.38	15 608.0	588.69	16 666.0
150	6"	996.62	27 725.0	1 132.5	31 747.0	1 253.7	35 359.0	1 333.7	37 756.0
200	8"	1 872.1	52 079.0	2 127.3	59 634.0	2 354.9	66 419.0	2 505.2	70 921.0
250	10"	2 992.7	83 254.0	3 400.7	95 333.0	3 764.6	106 180.0	4 004.9	113 380.0
300	12"	4 346.5	120 920.0	4 939.1	138 460.0	5 467.5	154 210.0	5 816.5	164 660.0

Measuring range saturated steam: 15 … 100 psig

Overpressure [psig]		**15**		**50**		**75**		**100**	
Density [lbs/ft³]		**0.0719**		**0.1497**		**0.2036**		**0.2569**	
Temperature [°F]		**249.98**		**297.86**		**320.36**		**338.184**	
Flow [lbs/h]		**min.**	**max.**	**min.**	**max.**	**min.**	**max.**	**min.**	**max.**
DN to EN 1092-1	**DN to ANSI B16.5**								
15	½"	12.95	64.35	16.83	133.87	19.62	182.02	22.04	229.63
25	1"	26.25	206.83	37.86	430.30	44.15	585.06	49.59	738.09
40	1½"	65.81	829.61	94.92	1 726	110.68	2 346.7	124.32	2 960.5
50	2"	113.94	1 436.3	164.34	2 988	191.63	4 062.9	215.23	5 125.6
80	3"	249.57	3 146.1	360.00	6 545.3	419.74	8 899.4	471.45	11 227
100	4"	428.81	5 405.7	618.51	11 246	721.21	15 291	810.06	19 291
150	6"	971.47	12 246	1 401.2	25 478	1 633.9	34 642	1 835.2	43 703
200	8"	1 824.8	23 004	2 632.1	47 859	3 069.1	65 072	3 447.2	82 092
250	10"	2 917.2	36 774	4 207.7	76 508	4 906.4	104 030	5 510.8	131 230
300	12"	4 236.8	53 410	6 111.1	111 120	7 125.8	151 080	8 003.6	190 600

© Siemens 2020

Dimensional drawings (continued)

Measuring range saturated steam: 150 … 300 psig

Overpressure [psig]		**150**		**200**		**250**		**300**	
Density [lbs/ft³]		**0.3627**		**0.4681**		**0.5735**		**0.6792**	
Temperature [°F]		**366.08**		**388.04**		**406.22**		**422.06**	
Flow [lbs/h]		**min.**	**max.**	**min.**	**max.**	**min.**	**max.**	**min.**	**max.**
DN to EN 1092-1	**DN to ANSI B16.5**								
15	½"	27.79	324.21	35.86	418.47	43.94	512.66	52.04	607.12
25	1"	58.93	1 042.1	66.94	1 345.1	74.10	1 647.8	80.63	1 951.5
40	1½"	147.72	4 107.2	167.83	4 702.8	185.76	5 237	202.15	5 728
50	2"	255.75	7 111.9	290.56	8 141.9	321.60	9 066.8	350.00	9 917
80	3"	560.19	15 578	636.44	17 834	704.43	19 860	766.60	21 722
100	4"	962.54	26 766	1 093.5	30 643	1 210.4	34 124	1 317.2	37 324
150	6"	2 180.6	60 639	2 477.4	69 421	2 742.1	77 307	2 984	84 556
200	8"	4 096.1	113 900	4 653.6	130 400	5 150.7	145 210	5 605.2	158 830
250	10"	6 548.1	182 090	7 439.3	208 460	8 234.1	232 140	8 960.6	253 910
300	12"	9 510.2	264 460	10 805	302 760	11 959	337 150	13 014	368 770

Circuit diagrams

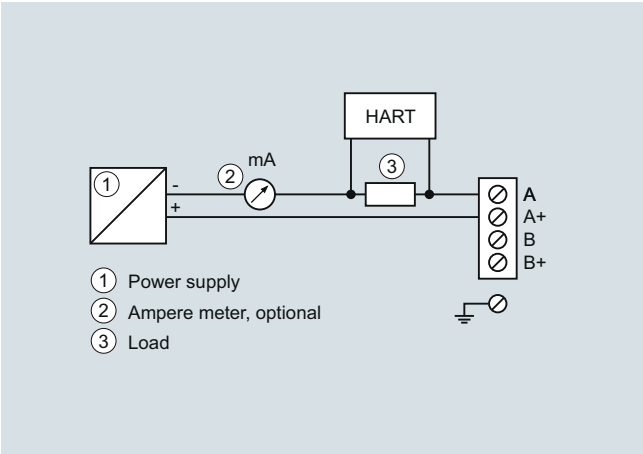

Connection power supply and HART communication

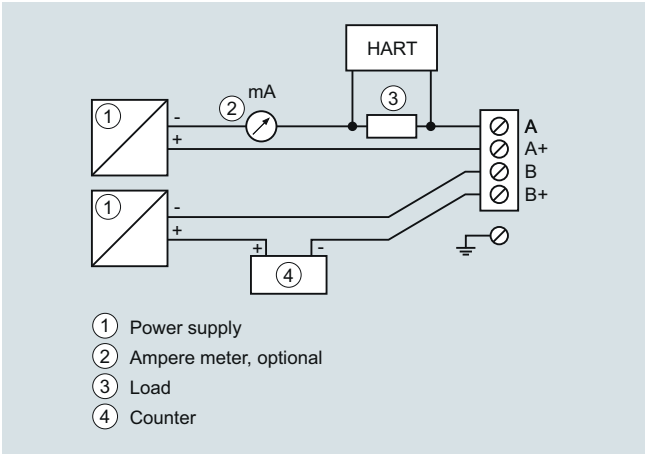

Connection pulse output

© Siemens 2020

Overview

SITRANS FX vortex flowmeter are designed for use in industrial applications and optimally suited to the demands in auxiliary supply systems.

The proven principle of vortex flowmeters is suitable for measurement of liquids, gases and vapors unaffected by conductivity, viscosity, temperature and pressure.

Benefits

- Integrated pressure and temperature compensation
- Temperature compensation for saturated steam included as standard
- High measuring accuracy
- Maintenance-free sensor
- Non-wearing, fully welded stainless steel construction with high resistance to corrosion, pressure and temperature
- SIL2 certified according to IEC 61508 Edition 2
- Use in hazardous areas
- Integrated reduction of nominal diameter for space-saving and economic installation and large measuring ranges
- Redundant data management: Easy exchange of electronics without loss of calibration and configuration data
- FAD (Free Air Delivery) functionality
- Gross and net heat calculation to support advanced energy management
- Remote version with cable length up to 50 m (164 ft) (in preparation)

Even the basic version of the vortex flowmeter SITRANS FX330 is equipped with temperature compensation for saturated steam applications. With the optional pressure sensor the SITRANS FX330 has integrated density compensation for calculation of corrected volume and mass (online density compensation). The density compensation for calculation of corrected volume and mass is based on the standards of NIST for gases and IAPWS for steam.

Higher measuring accuracy with the use of compact measuring systems

With the classic installation of a vortex flowmeter and separate pressure and temperature sensor as well as flow calculator, all errors occurring in the measuring chain must be taken into account when determining system accuracy. This can result in a measuring error between ± 3 to 5 %.

Using a vortex flowmeter with integrated pressure and temperature compensation such as the SITRANS FX330 allows you not only to lower installation costs but also increase the measuring accuracy of the measuring point. In this case the accuracy is ± 1.5 % of the measured value.

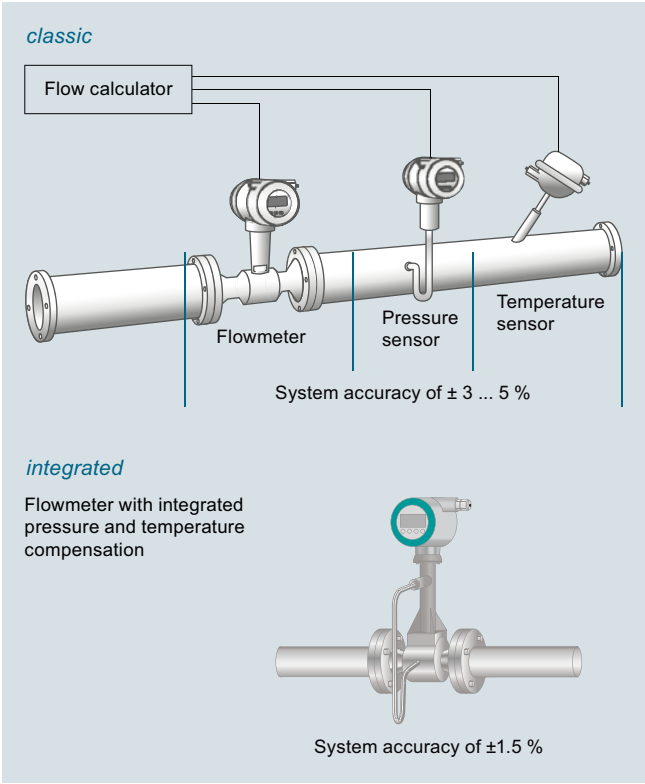

The SITRANS FX330 in flange design is available with integrated reduction of nominal diameter for space-saving installations and large measuring spans. About 90% of all vortex flowmeters are ordered one size smaller than the line diameter in order to increase the flow speed and to get a wider measuring range. Here, the line has to be reduced before and widened after the sensor, typically including 20x DN inlet and 5x DN outlet run. With the reduction and widening of nominal diameter included in the sensor, it is no longer necessary. To compensate the non-existent straight inlet run between reduction and the vortex bluff body, these devices are specially calibrated and linearized.

A new feature of the SITRANS FX330 is the advanced signal processing and filtering called AVFD (Advanced Vortex Frequency Detection): Interferences and disturbances in the measuring signal are suppressed, signals outside from the relevant frequency band are filtered out.

Redundant data management prevents loss of calibration and configuration data when changing electronics or display.

By default, all SITRANS FX330 meters are factory-calibrated (traceable to international standards) and pre-set according to customer specifications. The SITRANS FX330 also comes with an installation wizard to ease installation; e.g. in a steam application it will only show related settings.

Developed according to the standard IEC 61508 edition 2, the SITRANS FX330 can be used in safety-related application with classification SIL2 for continuous volume flow measurement.

© Siemens 2020

Application

- Measurement of saturated steam and superheated steam
- Steam boiler monitoring
- Heat metering of steam and hot water
- Measurement of consumption of industrial gases
- Measurement of consumption in compressed air systems
- Monitoring of compressor output
- Evaluation of Free Air Delivery (FAD)
- SIP and CIP processes in the food, beverage and pharmaceutical industries
- Measuring of conductive and non-conductive liquids
- Safety-related measurement in SIL applications (SIL2)

Gross and net heat quantity calculation

The SITRANS FX330 was designed for applications in auxiliary and supply service lines, such as internal monitoring of energy flows for saturated and superheated steam or hot water. Equipped with temperature sensor as standard, the device can be installed as heat meter in the feed line directly connected with an external temperature sensor in the return line. The gross and net heat calculation can be fed into a DCS to support advanced energy management.

When it comes to energy, the most accurate measurement of consumption is essential. By combining flow, temperature and pressure measurements in one device, SITRANS FX330 provides the basis for a precise mass flow calculation.

In steam applications, the software even determines the enthalpy - the heat content - of the steam. Therefore, SITRANS FX330 is able to calculate the gross heat quantity.

In case net heat quantity consumption of process is asked for, a single temperature sensor can be added to the return line. SITRANS FX330 uses the readings to calculate the amount of heat consumed.

The SITRANS FX330 thereby proves itself to be a reliable partner.

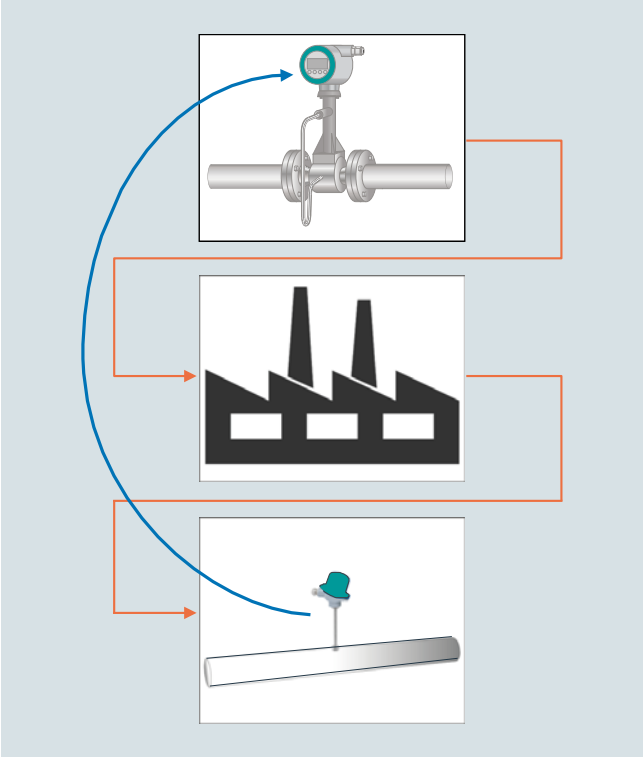

Design

SITRANS FX330 Flange	SITRANS FX330 Sandwich
Flange version with integrated temperature compensation as standard for saturated steam and optional pressure compensation for superheated steam, gases and wet gases.	All advantages of the flange version in a space-saving sandwich design; centering rings guarantee an easy installation without any offset.
Integrated reduction of nominal diameter for space-saving and economic installations plus large measuring ranges.	Integrated reduction of nominal diameter not available
Also in remote design with field housing and connection cable up to 50 m (164 ft) (in preparation)	
With shut off valve allowing • exchange and calibration of pressure sensor • pressure and leak testing of pipeline without interrupting the process	

Function

Vortex flowmeters are used to measure the flow of gases, vapors and liquids in completely filled pipes. The measuring principle is based on the principle of the Karman vortex street. Inside the measuring sensor vortices are shed from a bluff body and are detected by a sensor located behind. The frequency **f** of the vortex shedding is proportional to the flow velocity **v**.

The nondimensional Strouhal number **S** describes the relationshipbetween vortex frequency **f,** width **b** of the bluff body and the mean flow velocity **v**:

f = (S . v) / b

The vortex frequency is recorded at the sensor and evaluated at the converter.

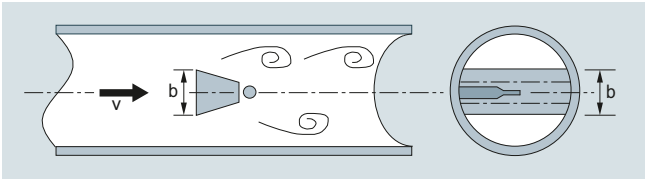

Functional principle

© Siemens 2020

Configuration

Available combinations of sensors and connection size for SITRANS FX330 in flanged design are shown in the table below.

SITRANS FX330 Flanged (7ME2610-...)										
Sensor size	**Connection size**	**EN 1092-1, Form B1/B2, PN 10**	**EN 1092-1, Form B1/B2, PN 16**	**EN 1092-1, Form B1/B2, PN 25**	**EN 1092-1, Form B1/B2, PN 40**	**EN 1092-1, Form B1/B2, PN 63**	**EN 1092-1, Form B1/B2, PN 100**	**ANSI B16.5, class 150**	**ANSI B16.5, class 300**	**ANSI B16.5, class 600**
DN15	DN 15	-	-	-	•	-	•	•	•	•
	DN 25	-	-	-	•	-	•	•	•	•
	DN 40	-	-	-	•	-	•	•	•	•
DN 25	DN 25	-	-	-	•	-	•	•	•	•
	DN 40	-	-	-	•	-	•	•	•	•
	DN 50	-	•	-	•	•	•	•	•	•
DN 40	DN 40	-	-	-	•	-	•	•	•	•
	DN 50	-	•	-	•	•	•	•	•	•
	DN 80	-	•	-	•	•	•	•	•	•
DN 50	DN 50	-	•	-	•	•	•	•	•	•
	DN 80	-	•	-	•	•	•	•	•	•
	DN 100	-	•	-	•	•	•	•	•	•
DN 80	DN 80	-	•	-	•	•	•	•	•	•
	DN 100	-	•	-	•	•	•	•	•	•
	DN 150	-	•	-	•	•	•	•	•	•
DN 100	DN 100	-	•	-	•	•	•	•	•	•
	DN 150	-	•	-	•	•	•	•	•	•
	DN 200	•	•	•	•	-	-	•	•	-
DN 150	DN 150	-	•	-	•	•	•	•	•	•
	DN 200	•	•	•	•	-	-	•	•	-
	DN 250	•	•	•	•	-	-	•	•	-
DN 200	DN 200	•	•	•	•	-	-	•	•	-
	DN 250	•	•	•	•	-	-	•	•	-
	DN 300	•	•	•	•	-	-	•	•	-
DN 250	DN 250	•	•	•	•	-	-	•	•	-
	DN 300	•	•	•	•	-	-	•	•	-
DN 300	DN 300	•	•	•	•	-	-	•	•	-

• available
- not available

© Siemens 2020

Technical specifications

Range of application	Flow measurement of liquids, gases and vapors	
Mode of operation		
Measuring principle	Karman vortex street	
Primary measured value	• Volume flow • Mass flow • Corrected volume flow • Density • Temperature • Pressure • Heat energy	
Design		
Transmitter		
• Compact and remote version	Cable length up to 50 m (164 ft) (in preparation)	
Sensor	Flange version	Sandwich version
• Integrated temperature measurement	•	•
• Reduction of nominal diameter	•	
• Pressure and temperature compensation	•	•
• Isolation valve	•	
• Dual measuring device	•	•
Display	4-line graphical display (backlit) with control keys	
Operation	• Via local display (languages: German, English, French) • Via SIMATIC PDM	
Accuracy		
Volume flow		
• Liquids		
- Re ≥ 20 000	± 0.75 % of measured value	
- 10 000 < Re < 20 000	± 2.0 % of measured value	
• Gases and vapors		
- Re ≥ 20 000	± 1.0 % of measured value	
- 10 000 < Re < 20 000	± 2.0 % of measured value	
Mass flow/Corrected volume flow		
• Gases and vapors		
- Re ≥ 20 000	± 1.5 % of measured value	
- 10 000 < Re < 20 000	± 2.5 % of measured value	
Mass flow		
• Liquid/water		
- Re ≥ 20 000	± 1.5 % of measured value	
- 10 000 < Re < 20 000	± 2.5 % of measured value	
Repeatability (Volume flow)	± 0.1 % of measured value	
Operating conditions		
Temperature ratings		
• Medium	-40 … +240 °C (-40 … +465 °F)	
• Ambient		
- Non-Ex	-40 … +85 °C (-40… +185 °F)	
- Ex	-40 … +65 °C (-40… +140 °F)	
• Storage	-50 … +85 °C (-58… +185 °F)	
Pressure ratings	Max. 100 bar (1450 psi), higher pressure rates on request	
Max. allowable test pressure		
• With integrated pressure sensor and isolation valve (closed)	1.5 x PN	
• With integrated pressure sensor and without isolation valve	2 times the measuring range of pressure sensor	
Process medium		
• Density	Taken into consideration when sizing	
• Viscosity	< 10 cP	
• Reynold's number	> 10000	
Recommended flow velocities		
• Liquids	0.3 ... 7 m/s (0.98 ... 23 ft/s)	
• Gases and vapors DN 15: DN 25:	2.0 ... 80 m/s (6.6 ... 262.5 ft/s) 3.0 ... 45 m/s (9.8 ... 148 ft/s) 2.0 ... 70 m/s (6.6 ... 230 ft/s)	
	For detailed information see operating instructions "Intended use"	
Installation conditions		
Inlet run		
• For undisturbed flow profile, after pipe section with reducer, after 1 x 90° pipe bend	≥ 15 x DN	
• After 2 x 90° pipe bend	≥ 30 x DN	
• After 2 x 90° three-dimensional pipe bend	≥ 40 x DN	
• After control valves	≥ 50 x DN	
• Before flow conditioner	≥ 2 x DN	
• After flow conditioner	≥ 8 x DN	
Outlet run	≥ 5 x DN	
Material		
Sensor and process connections		
• Standard	1.4404/316L	
• Option	Hastelloy C22 on request	
Transmitter housing	Aluminum	
• Standard	Aluminum die-cast, two-layer coating (epoxy/polyester)	
• Option	Die-cast aluminum with finish for advanced requirements	
Pressure sensor gasket		
• Standard	FPM	
• Option	FFKM	
Sensor gasket (Pick-up)		
• Standard	1.4535/316L	
• Option	Hastelloy C276	
Process connections		
DIN EN 1092-1	DN 15 ... DN 300/PN 16 ... PN 100	
ANSI B16.5	½" ... 12"/150 ... 600 lb	
	For valid combinations of connection size and pressure rating see table in section Configuration	
Enclosure rating		
Standard	Compact and remote version: IP66/IP67	
Option	Remote version: IP66/IP68 for sensor	
Power supply		
Non-Ex version	14 … 36 V DC	
Ex version	14 … 30 V DC	
Inputs/Outputs		
Current output	4 ... 20 mA, HART	
Binary output	Pulse/Frequency/Status/Limit switch	
Current input	4 ... 20 mA, passive	
Communication	HART 7	
Calibration		
Standard calibration	3-point calibration: 3 x 15 %, 3 x 50 %, 3 x 80 %	
Special calibration	5-point calibration: 3 x 15 %, 3 x 30 %, 3 x 50 %, 3 x 60 %, 3 x 80 %	
Certificates and approvals		
Ex approvals	ATEX, QPS, IECEx	
CE declaration of conformity	PED 2014/68/EU EMC 2014/30/EU	
Safety integration level (SIL)	SIL2 according to IEC 61508	

© Siemens 2020

Selection and ordering data

	Article No.
SITRANS FX330 Flanged	
• **Not approved for SIL2 safety applications** ↗	**7ME2610-**
• **Approved for SIL2 safety applications** ↗	**7ME2611-**

↗ Click on the Article No. for the online configuration in the PIA Life Cycle Portal.

Sensor size	**Connection size**	
DN 15 (½")	DN 15 (½")	**1 A**
	DN 25 (1")	**1 B**
	DN 40 (1½")	**1 C**
DN 25 (1")	DN 25 (1")	**2 B**
	DN 40 (1½")	**2 C**
	DN 50 (2")	**2 D**
DN 40 (1½")	DN 40 (1½")	**2 K**
	DN 50 (2")	**2 L**
	DN 80 (3")	**2 M**
DN 50 (2")	DN 50 (2")	**2 R**
	DN 80 (3")	**2 S**
	DN 100 (4")	**2 T**
DN 80 (3")	DN 80 (3")	**3 L**
	DN 100 (4")	**3 M**
	DN 150 (6")	**3 R**
DN 100 (4")	DN 100 (4")	**3 S**
	DN 150 (6")	**3 T**
	DN 200 (8")	**3 Q**
DN 150 (6")	DN 150 (6")	**4 M**
	DN 200 (8")	**4 P**
	DN 250 (10")	**4 Q**
DN 200 (8")	DN 200 (8")	**4 T**
	DN 250 (10")	**4 U**
	DN 300 (12")	**4 V**
DN 250 (10")	DN 250 (10")	**4 W**
	DN 300 (12")	**4 Y**
DN 300 (12")	DN 300 (12")	**5 E**
Process connection and pressure rate		
EN 1092-1 Form B1		
PN 10	DN 200 ... 300	**A**
PN 16	DN 50 ... 300	**B**
PN 25	DN 200 ... 300	**C**
PN 40	DN 15 ... 300	**D**
PN 63	DN 50 ... 150	**E**
PN 100	DN 15 ... 150	**F**
ANSI B16.5 RF		
Class 150	½ ... 12"	**J**
Class 300	½ ... 12"	**K**
Class 600	½ ... 6"	**L**
System design		
Compact version	No cable	**0**
Remote version (in preparation)	Cable length with Order code L..	**1**
Transmitter housing		
Aluminum		**0**
Aluminum, silicon free		**1**
Dual version, aluminum		**6**
Dual version, aluminum, silicon free		**7**

	Article No.
SITRANS FX330 Flanged	
• **Not approved for SIL2 safety applications**	**7ME2610-**
• **Approved for SIL2 safety applications**	**7ME2611-**
Communication	
HART	**0**
PROFIBUS PA	**1**
FOUNDATION Fieldbus	**2**
Ex approval	
Without Ex approval	**A**
ATEX II2 G Ex ia	**B**
ATEX II2 G Ex d	**C**
ATEX II3 G Ex nA	**D**
ATEX II2 D Ex tb	**E**
QPS IS Class I Div.1	**F**
QPS XP Class I Div.1	**G**
QPS NI Class I Div. 2	**H**
QPS DIP Class I, III Div. 1	**J**
IECEx II2 G Ex ia	**K**
IECEx II2 G Ex d	**L**
IECEx II3 G Ex nA	**M**
IECEx II2 D Ex tb	**N**
Pressure sensor and gasket material	
Without pressure sensor	**A**
With pressure sensor and gasket material FPM (Viton), Range:	
1 bar (14.5 psi)	**B**
2 bar (29 psi)	**C**
4 bar (58 psi)	**D**
6 bar (87 psi)	**E**
10 bar (145 psi)	**F**
16 bar (232 psi)	**G**
25 bar (363 psi)	**H**
40 bar (580 psi)	**J**
60 bar (870 psi)	**K**
100 bar (1450 psi)	**L**
With pressure sensor and gasket material FFKM (Kalrez), Range:	
1 bar (14.5 psi)	**M**
2 bar (29 psi)	**N**
4 bar (58 psi)	**P**
6 bar (87 psi)	**Q**
10 bar (145 psi)	**R**
16 bar (232 psi)	**S**
25 bar (363 psi)	**T**
40 bar (580 psi)	**U**
60 bar (870 psi)	**V**
100 bar (1450 psi)	**W**
Software version	
Standard - Uncompensated for gases, steam and liquids including temperature compensation for saturated steam	**0**
Standard + Heat meter for saturated steam and water	**1**
Density compensation for steam + Heat meter for saturated and superheated steam	**2**
Density compensation for gases, wet gases and mixed gases + FAD	**3**

© Siemens 2020

Selection and ordering data

		Article No.
SITRANS FX330 Sandwich		
• **Not approved for SIL2 safety applications** ↗		**7ME2710-**
• **Approved for SIL2 safety applications** ↗		**7ME2711-**
		■ ■ ■ ■ - ■ ■ ■
↗ Click on the Article No. for the online configuration in the PIA Life Cycle Portal.		
Sensor size		
DN 15 (½")		**1 A**
DN 25 (1")		**2 B**
DN 40 (1½")		**2 K**
DN 50 (2")		**2 R**
DN 80 (3")		**3 L**
DN 100 (4")		**3 S**
Pressure rating		
EN 1092-1		
PN 16	DN 15 ... 100	**B**
PN 25	DN 15 ... 100	**C**
PN 40	DN 15 ... 100	**D**
PN 63	DN 15 ... 100	**E**
PN 100	DN 15 ... 100	**F**
ANSI B16.5		
Class 150	½ ... 4"	**J**
Class 300	½ ... 4"	**K**
Class 600	½ ... 4"	**L**
System design		
Compact version	No cable	**0**
Remote version (in preparation)	Cable length with Order code L..	**1**
Transmitter housing		
Aluminum		**0**
Aluminum, silicon free		**1**
Communication		
HART		**0**
PROFIBUS PA		**1**
FOUNDATION Fieldbus		**2**
Ex approval		
Without Ex approval		**A**
ATEX II2 G Ex ia		**B**
ATEX II2 G Ex d		**C**
ATEX II3 G Ex nA		**D**
ATEX II2 D Ex tb		**E**
QPS IS Class I Div.1		**F**
QPS XP Class I Div.1		**G**
QPS NI Class I Div. 2		**H**
QPS DIP Class I, III Div. 1		**J**
IECEx II2 G Ex ia		**K**
IECEx II2 G Ex d		**L**
IECEx II3 G Ex nA		**M**
IECEx II2 D Ex tb		**N**

	Article No.
SITRANS FX330 Sandwich	
• **Not approved for SIL2 safety applications**	**7ME2710-**
• **Approved for SIL2 safety applications**	**7ME2711-**
	■ ■ ■ ■ - ■ ■ ■
Pressure sensor and gasket material	
Without pressure sensor	**A**
With pressure sensor and gasket material FPM (Viton), Range:	
1 bar (14.5 psi)	**B**
2 bar (29 psi)	**C**
4 bar (58 psi)	**D**
6 bar (87 psi)	**E**
10 bar (145 psi)	**F**
16 bar (232 psi)	**G**
25 bar (363 psi)	**H**
40 bar (580 psi)	**J**
60 bar (870 psi)	**K**
100 bar (1450 psi)	**L**
With pressure sensor and gasket material FFKM (Kalrez), Range:	
1 bar (14.5 psi)	**M**
2 bar (29 psi)	**N**
4 bar (58 psi)	**P**
6 bar (87 psi)	**Q**
10 bar (145 psi)	**R**
16 bar (232 psi)	**S**
25 bar (363 psi)	**T**
40 bar (580 psi)	**U**
60 bar (870 psi)	**V**
100 bar (1450 psi)	**W**
Software version	
Standard - Uncompensated for gases, steam and liquids including temperature compensation for saturated steam	**0**
Standard + Heat meter for saturated steam and water	**1**
Density compensation for steam + Heat meter for saturated and superheated steam	**2**
Density compensation for gases, wet gases and mixed gases + FAD	**3**

Additional information	Order code
Please add "**-Z**" to Article No. and specify as minimum Order code Y40, Y41, Y42 and Y45 and plain text.	
Application data	
Medium: Specify medium (Liquid, gas, steam or customer-specific)	**Y40**
Temperature: Specify operating temperature with unit	**Y41**
Pressure: Specify operating pressure with unit	**Y42**
Density (only for customer-specified medium): Specify density with unit	**Y43**
Viscosity (only for customer-specified medium): Specify viscosity with unit	**Y44**
Flow rate: Specify max. flow rate with units	**Y45**

Operating instruction

Description	Article No.
English	A5E2100423

All literature is available to download for free, in a range of languages, at https://intranet.entry.siemens.com

© Siemens 2020

Selection and ordering data

	Order code
Further designs	
Please add "**-Z**" to Article No. and specify Order code.	
Cable connection	
Without cable glands	**A01**
M20x1.5 cable glands made of plastic, grey	
• 3 pcs	**A02**
• 2 pcs.	**A12**
• 1 pc.	**A22**
M20x1.5 cable glands made of plastic, blue	
• 3 pcs	**A03**
• 2 pcs.	**A13**
• 1 pc.	**A23**
M20x1.5 cable glands made of brass, Ex-d/t approved	
• 3 pcs	**A04**
• 2 pcs.	**A14**
• 1 pc.	**A24**
M20x1.5 cable glands made of brass, Ex-nA approved	
• 3 pcs	**A05**
• 2 pcs.	**A15**
• 1 pc.	**A25**
M20x1.5 cable glands in stainless steel, Ex-d/t approved	
• 3 pcs	**A06**
• 2 pcs.	**A16**
• 1 pc.	**A26**
1/2" NPT conduit connection in plastic (cable glands not included)	
• 3 pcs	**A07**
• 2 pcs.	**A17**
• 1 pc.	**A27**
Isolation valve	
With isolation valve	**B10**
Certificates	
Certificate of compliance according to EN 10204-2.1	**C10**
Pressure test + Inspection certificate according to EN 10204-3.1	**C11**
Material certification of pressure bearing metal parts according to EN 10204-3.1	**C12**
Material in accordance with NACE MR0175/ISO 15156	**C13**
PMI of pressure bearing metal parts + Inspection certificate according to EN 10204-3.1	**C14**
Material certificate of pressure bearing metal parts according to EN 10204-3.1 + PMI	**C15**
Dye penetration test of wetted welds	**C16**
X-ray test of wetted welds	**C17**

	Order code
Calibration	
5-point calibration with certificate	**D11**
Cleaning	
Free of oil and grease (wetted parts)	**K46**
Free of oil and grease (wetted parts) + Inspection certificate according to EN 10204-3.1	**K48**
Cable length for remote version (in preparation)	
5 m (16 ft)	**L01**
10 m (32 ft)	**L02**
15 m (49 ft)	**L03**
20 m (65 ft)	**L04**
25 m (82 ft)	**L05**
30 m (98 ft)	**L06**
35 m (114 ft)	**L07**
40 m (131 ft)	**L08**
45 m (147 ft)	**L09**
50 m (164 ft)	**L10**
Tag name plate	
TAG name plate in stainless steel 40 × 20mm (Add plain text)	**Y17**
TAG name plate in stainless steel tag 120 × 46 mm (Add plain text)	**Y18**

© Siemens 2020

Selection and ordering data

SITRANS FX330 spare parts

	Article No.
Transmitter electronic for SITRANS FX330	
• FXT030 in compact design with HART (non-Ex/Ex-i)	**A5E38663070**
• FXT030 in compact design with HART (Ex-d)	**A5E38663398**
Display with HMI and data memory	**A5E38663613**
Seal disc 21.8 x12 x 0.1	**KRH-17000700**
O-ring pickup	**KRH-17001400**
O-ring for pressure screw 17.13 x 2.62, FPM 70	**KRH-17001200**
Cover gasket O-ring	**KRH-16000300**
Front Cover (non Ex)	**KRH-16002000**
Front Cover (Ex)	**KRH-16002500**
Back Cover	**KRH-16003000**
Converter housing gasket, 59,35,5-2-N	**KRH-16000400**
O-ring	
• 20 x 1, FPM (DIN 3771)	**KRH-17001100**
• 10 x 2, NBR	**KRH-17001000**
DUBOX plug 5 pole, linear, RM2	**KRH-17000800**
Cable feed through 10 pole (non Ex)	**KRH-16000500**
Shut-off valve	**KRH-17004000**
Centering rings for Sandwich-Version	
• DN 15	**KRH-17006000**
• DN 25	**KRH-17006001**
• DN 40	**KRH-17006002**
• DN 50	**KRH-17006003**
• DN 50 (300 lbs, 600 lbs)	**KRH-17006004**
• DN 50 (JIS 10K, 16K, 20K)	**KRH-17006005**
• DN 80	**KRH-17006006**
• DN 100	**KRH-17006007**
Wall housing incl. Neck (incl. Screws, Gaskets and cable glands)	**KRH-16112002**
Sensor replacement kit including seal disc, socket, pickup and O-rings (for pickup and pressure screw)	
• DN 15	**KRH-16111100**
• DN 15 Conical	**KRH-16111110**
• DN 25	**KRH-16111150**
• DN 25 Conical	**KRH-16111160**
• DN 40	**KRH-16111200**
• DN 50	**KRH-16111210**
• DN 80	**KRH-16111220**
• DN 100	**KRH-16111230**
• DN 150 ... DN 300	**KRH-16111300**
Pressure sensor replacement kit including pressure sensor with calibration certificate, DUBOX plug and O-rings	
• 1 bar	**KRH-16111350**
• 2 bar	**KRH-16111370**
• 4 bar	**KRH-16111400**
• 6 bar	**KRH-16111401**
• 10 bar	**KRH-16111402**
• 16 bar	**KRH-16111403**
• 25 bar	**KRH-16111404**
• 40 bar	**KRH-16111405**
• 60 bar	**KRH-16111406**
• 100 bar	**KRH-16111407**
SITRANS FX300 upgrade kit (in preparation)	

SITRANS FX330 Flow Straightener ↗	**7ME2900-** ■	■	■	**0**	**0**
↗ Click on the Article No. for the online configuration in the PIA Life Cycle Portal.					
Material					
Stainless steel 1.4404 (316L)	**1**				
Nominal size					
DN 15 / ANSI ½"		**A**			
DN 25 / ANSI 1"		**B**			
DN 40 / ANSI 1½"		**C**			
DN 50 / ANSI 2"		**D**			
DN 80 / ANSI 3"		**E**			
DN 100 / ANSI 4"		**F**			
DN 150 / ANSI 6"		**G**			
DN 200 / ANSI 8"		**H**			
DN 250 / ANSI 10"		**J**			
DN 300 / ANSI 12"		**K**			
Pressure rating					
PN 10			**A**		
PN 16			**B**		
PN 25			**C**		
PN 40			**D**		
PN 63			**E**		
PN 100			**F**		
Class 150			**J**		
Class 300			**K**		
Class 600			**L**		

Additional information	Order code
Please add "**-Z**" to Article No. and specify Order code.	
Certificates	
Certificate of compliance to EN 10204-2.1	**C10**
Material certification of pressure bearing parts to EN 10204-3.1	**C12**
Material in accordance with NACE MR0175/ISO 15156	**C13**
PMI of pressure bearing parts + Inspection certificate according to EN 10204-3.1	**C14**
Material certificate of pressure bearing parts according to EN 10204-3.1 + PMI	**C15**
Cleaning	
Free of oil and grease (wetted parts)	**K46**
Free of oil and grease (wetted parts) + Inspection certificate according to EN 10204-3.1	**K48**

© Siemens 2020

Dimensional drawings

Compact version

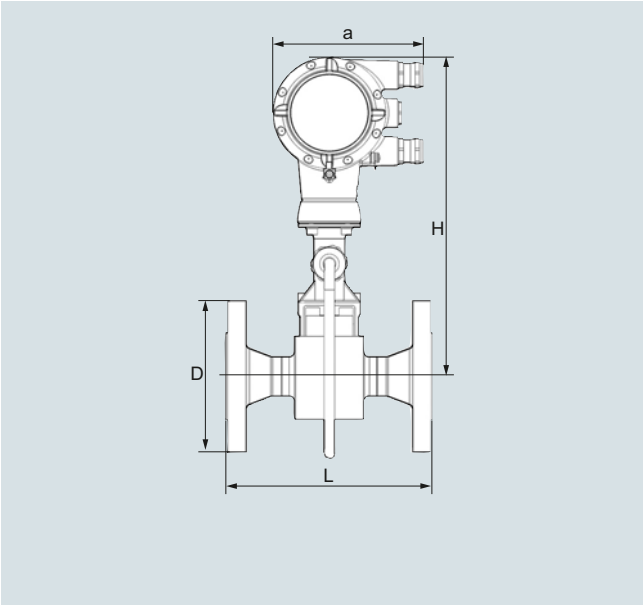

SITRANS FX330 (Vortex), Flanged version with pressure sensor, front view

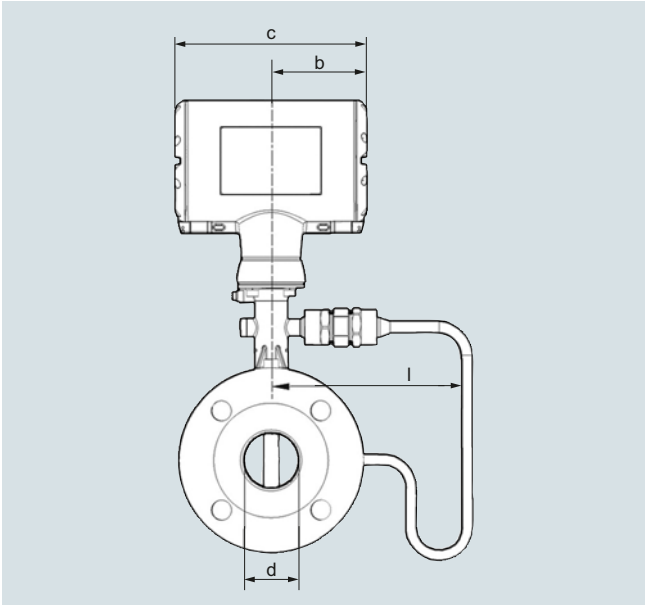

SITRANS FX330 (Vortex), Flanged version with pressure sensor, side view

© Siemens 2020

Dimensional drawings (continued)

Flange version EN 1092-1

Size	Pressure rating	Dimensions [mm (inch)] a = 148.5 (5.85), b = 85.8 (3.38), c = 171.5 (6.76)							Weight [kg (lb)]	
DN	PN	d	d FR[1)]	d FR[2)]	D	L	H	I	Flowmeter (without pressure sensor)	Flowmeter (with pressure sensor)
15	40	17.3 (0.68)	-	-	95 (3.74)	200 (7.87)	358.8 (14.2)	169.3 (6.67)	5.5 (12.13)	6.1 (13.45)
15	100	17.3 (0.68)	-	-	105 (4.13)	200 (7.87)	358.8 (14.2)	169.3 (6.67)	6.5 (14.33)	7.1 (15.65)
25	40	28.5 (1.12)	17.3 (0.68)	-	115 (4.53)	200 (7.87)	358.4 (14.1)	169.3 (6.67)	7.3 (16.09)	7.9 (17.42)
25	100	28.5 (1.12)	17.3 (0.68)	-	140 (5.51)	200 (7.87)	358.4 (14.1)	169.3 (6.67)	9.3 (20.50)	9.9 (21.83)
40	40	43.1 (1.70)	28.5 (1.12)	17.3 (0.68)	150 (5.91)	200 (7.87)	362.3 (14.3)	169.5 (6.67)	10.2 (22.49)	10.8 (23.81)
40	100	42.5 (1.67)	28.5 (1.12)	17.3 (0.68)	170 (6.69)	200 (7.87)	362.3 (14.3)	169.5 (6.67)	14.2 (31.31)	14.8 (32.63)
50	16	54.5 (2.15)	42.5 (1.67)	28.5 (1.12)	165 (6.50)	200 (7.87)	368.3 (14.5)	169.3 (6.67)	12.1 (26.68)	12.7 (28.00)
50	40	54.5 (2.15)	42.5 (1.67)	28.5 (1.12)	165 (6.50)	200 (7.87)	368.3 (14.5)	169.3 (6.67)	12.3 (27.12)	12.9 (28.44)
50	63	54.5 (2.15)	42.5 (1.67)	28.5 (1.12)	180 (7.09)	200 (7.87)	368.3 (14.5)	169.3 (6.67)	16.3 (35.94)	16.9 (37.26)
50	100	53.9 (2.12)	42.5 (1.67)	28.5 (1.12)	195 (7.68)	200 (7.87)	368.3 (14.5)	169.3 (6.67)	17.8 (39.24)	18.4 (40.57)
80	16	82.5 (3.25)	54.5 (2.15)	42.5 (1.67)	200 (7.87)	200 (7.87)	380.3 (15.0)	169.3 (6.67)	16.8 (37.04)	17.4 (38.36)
80	40	82.5 (3.25)	54.5 (2.15)	42.5 (1.67)	200 (7.87)	200 (7.87)	380.3 (15.0)	169.3 (6.67)	18.8 (41.45)	19.4 (42.77)
80	63	81.7 (3.22)	54.5 (2.15)	42.5 (1.67)	215 (8.46)	200 (7.87)	380.3 (15.0)	169.3 (6.67)	22.8 (50.27)	23.4 (51.59)
80	100	80.9 (3.19)	54.5 (2.15)	42.5 (1.67)	230 (9.06)	200 (7.87)	380.3 (15.0)	169.3 (6.67)	26.8 (59.08)	27.4 (60.41)
100	16	107 (4.21)	80.9 (3.19)	54.5 (2.15)	220 (8.66)	250 (9.84)	396.8 (15.7)	171.5 (6.75)	21.4 (47.18)	22 (48.50)
100	40	107 (4.21)	80.9 (3.19)	54.5 (2.15)	235 (9.25)	250 (9.84)	396.8 (15.7)	171.5 (6.75)	24.4 (53.79)	25 (55.12)
100	63	106 (4.17)	80.9 (3.19)	54.5 (2.15)	250 (9.84)	250 (9.84)	396.8 (15.7)	171.5 (6.75)	29.4 (64.82)	30 (66.14)
100	100	104 (4.09)	80.9 (3.19)	54.5 (2.15)	265 (10.43)	250 (9.84)	396.8 (15.7)	171.5 (6.75)	35.4 (78.04)	36 (79.37)
150	16	159 (6.26)	107 (4.21)	80.9 (3.19)	285 (11.22)	300 (11.81)	416.3 (16.4)	191.5 (7.54)	35.2 (77.60)	35.8 (78.93)
150	40	159 (6.26)	107 (4.21)	80.9 (3.19)	300 (11.81)	300 (11.81)	416.3 (16.4)	191.5 (7.54)	41.2 (90.83)	41.8 (92.15)
150	63	157 (6.18)	107 (4.21)	80.9 (3.19)	345 (13.58)	300 (11.81)	416.3 (16.4)	191.5 (7.54)	59.2 (130.51)	59.8 (131.84)
150	100	154 (6.06)	107 (4.21)	80.9 (3.19)	355 (13.98)	300 (11.81)	416.3 (16.4)	191.5 (7.54)	67.2 (148.15)	67.8 (149.47)
200	10	207 (8.15)	159 (6.26)	107 (4.21)	340 (13.39)	300 (11.81)	442.1 (17.4)	202.8 (7.98)	37.8 (83.33)	38.4 (84.66)
200	16	207 (8.15)	159 (6.26)	107 (4.21)	340 (13.39)	300 (11.81)	442.1 (17.4)	202.8 (7.98)	37.8 (83.33)	38.4 (84.66)
200	25	207 (8.15)	159 (6.26)	107 (4.21)	360 (14.17)	300 (11.81)	442.1 (17.4)	202.8 (7.98)	46.8 (103.18)	47.4 (104.50)
200	40	207 (8.15)	159 (6.26)	107 (4.21)	375 (14.76)	300 (11.81)	442.1 (17.4)	202.8 (7.98)	54.8 (120.81)	55.4 (122.14)
250	10	260 (10.24)	207 (8.15)	159.3 (6.27)	395 (15.55)	380 (14.96)	468.8 (18.5)	229.5 (9.04)	57.4 (126.55)	58.0 (127.87)
250	16	260 (10.24)	207 (8.15)	159.3 (6.27)	405 (15.94)	380 (14.96)	468.8 (18.5)	229.5 (9.04)	58.4 (128.75)	59.0 (130.07)
250	25	259 (10.20)	207 (8.15)	159.3 (6.27)	425 (16.73)	380 (14.96)	468.8 (18.5)	229.5 (9.04)	74.4 (164.02)	75.0 (165.35)
250	40	259 (10.20)	207 (8.15)	159.3 (6.27)	450 (17.72)	380 (14.96)	468.8 (18.5)	229.5 (9.04)	92.4 (203.71)	93.0 (205.03)
300	10	310 (12.20)	260 (10.24)	207 (8.15)	445 (17.52)	450 (17.72)	492.8 (19.4)	255 (10.04)	75.7 (166.89)	76.3 (168.21)
300	16	310 (12.20)	260 (10.24)	207 (8.15)	460 (18.11)	450 (17.72)	492.8 (19.4)	255 (10.04)	82.2 (181.22)	82.8 (182.54)
300	25	308 (12.13)	260 (10.24)	207 (8.15)	485 (19.09)	450 (17.72)	492.8 (19.4)	255 (10.04)	98.7 (217.60)	99.3 (218.92)
300	40	308 (12.13)	260 (10.24)	207 (8.15)	515 (20.28)	450 (17.72)	492.8 (19.4)	255 (10.04)	127.5 (281.09)	128.1 (282.41)

1) FR - single reduction
2) F2R - double reduction

© Siemens 2020

Dimensional drawings (continued)

Flange version ANSI B16.5

Size	Pressure rating	Dimensions [mm (inch)] a = 148.5 (5.85), b = 85.8 (3.38), c = 171.5 (6.76)							Weight [kg (lb)]	
DN	Class	d	d FR[1)]	d FR[2)]	D	L	H	I	Flowmeter (without pressure sensor)	Flowmeter (with pressure sensor)
½	150	16 (0.63)	-	-	90 (3.5)	200 (7.9)	358.8 (14.2)	169.3 (6.67)	4.5 (9.92)	5.1 (11.24)
½	300	16 (0.63)	-	-	95 (3.7)	200 (7.9)	358.8 (14.2)	169.3 (6.67)	4.9 (10.80)	5.5 (12.13)
½	600	14 (0.55)	-	-	95 (3.7)	200 (7.9)	358.8 (14.2)	169.3 (6.67)	5.1 (11.24)	5.7 (12.57)
1	150	27 (1.1)	15.8 (0.62)	-	110 (4.3)	200 (7.9)	358.4 (14.1)	169.3 (6.67)	6.2 (13.67)	6.8 (14.99)
1	300	27 (1.1)	15.8 (0.62)	-	125 (4.9)	200 (7.9)	358.4 (14.1)	169.3 (6.67)	7.2 (15.87)	7.8 (17.20)
1	600	24 (1.0)	15.8 (0.62)	-	125 (4.9)	200 (7.9)	358.4 (14.1)	169.3 (6.67)	7.5 (16.53)	8.1 (17.86)
1½	150	41 (1.6)	26.6 (1.1)	15.8 (0.6)	125 (4.9)	200 (7.9)	362.3 (14.3)	169.5 (6.67)	8.3 (18.30)	8.9 (19.62)
1½	300	41 (1.6)	26.6 (1.1)	15.8 (0.6)	155 (6.1)	200 (7.9)	362.3 (14.3)	169.5 (6.67)	10.4 (22.93)	11 (24.25)
1½	600	38 (1.5)	26.6 (1.1)	15.8 (0.6)	155 (6.1)	200 (7.9)	362.3 (14.3)	169.5 (6.67)	11.4 (25.13)	12 (26.46)
2	150	53 (2.1)	40.9 (1.6)	26.6 (1.1)	150 (5.9)	200 (7.9)	368.3 (14.5)	169.5 (6.67)	11 (24.25)	11.6 (25.57)
2	300	53 (2.1)	40.9 (1.6)	26.6 (1.1)	165 (6.5)	200 (7.9)	368.3 (14.5)	169.5 (6.67)	12.4 (27.34)	13 (28.66)
2	600	49 (1.9)	40.9 (1.6)	26.6 (1.1)	165 (6.5)	200 (7.9)	368.3 (14.5)	169.5 (6.67)	13.9 (30.64)	14.5 (31.97)
3	150	78 (3.1)	52.6 (2.1)	40.9 (1.6)	190 (7.5)	200 (7.9)	380.3 (15.0)	169.3 (6.67)	19.8 (43.65)	20.4 (44.97)
3	300	78 (3.1)	52.6 (2.1)	40.9 (1.6)	210 (8.3)	200 (7.9)	380.3 (15.0)	169.3 (6.67)	22.8 (50.27)	23.4 (51.59)
3	600	74 (2.9)	52.6 (2.1)	40.9 (1.6)	210 (8.3)	200 (7.9)	380.3 (15.0)	169.3 (6.67)	23.8 (52.47)	24.4 (53.79)
4	150	102 (4.0)	78 (3.1)	52.6 (2.1)	230 (9.1)	250 (9.8)	396.8 (15.7)	171.5 (6.76)	23.4 (51.59)	24 (52.91)
4	300	102 (4.0)	78 (3.1)	52.6 (2.1)	255 (10)	250 (9.8)	396.8 (15.7)	171.5 (6.76)	31.4 (69.23)	32 (70.55)
4	600	97 (3.8)	78 (3.1)	52.6 (2.1)	275 (11)	250 (9.8)	396.8 (15.7)	171.5 (6.76)	40.4 (89.07)	41 (90.39)
6	150	154 (6.1)	102 (4.0)	78.0 (3.1)	280 (11)	300 (12)	416.3 (16.4)	191.5 (7.54)	36.2 (79.81)	36.8 (81.13)
6	300	154 (6.1)	102 (4.0)	78.0 (3.1)	320 (13)	300 (12)	416.3 (16.4)	191.5 (7.54)	51.2 (112.88)	51.8 (114.20)
6	600	146 (5.8)	102 (4.0)	78.0 (3.1)	355 (14)	300 (12)	416.3 (16.4)	191.5 (7.54)	76.2 (167.99)	76.8 (169.31)
8	150	203 (8.0)	154 (6.1)	102 (4.0)	345 (14)	300 (12)	442.1 (17.4)	202.8 (8.0)	50.0 (110.23)	50.6 (111.55)
8	300	203 (8.0)	154 (6.1)	102 (4.0)	380 (15)	300 (12)	442.1 (17.4)	202.8 (8.0)	74.8 (164.91)	75.4 (166.23)
10	150	255 (10.0)	203 (8.0)	154 (6.1)	405 (16)	380 (15)	468.8 (18.5)	229.5 (9.04)	74.4 (164.02)	75.0 (165.35)
10	300	255 (10.0)	203 (8.0)	154 (6.1)	455 (18)	380 (15)	468.8 (18.5)	229.5 (9.04)	106.4 (234.57)	107.0 (235.89)
12	150	305 (12.0)	255 (10.0)	203 (8.0)	485 (19)	450 (18)	492.8 (19.4)	255 (10.0)	106.4 (234.35)	107.0 (235.67)
12	300	305 (12.0)	255 (10.0)	203 (8.0)	520 (21)	450 (18)	492.8 (19.4)	255 (10.0)	151.4 (333.56)	152.0 (334.88)

1) FR - single reduction
2) F2R - double reduction

© Siemens 2020

Dimensional drawings (continued)

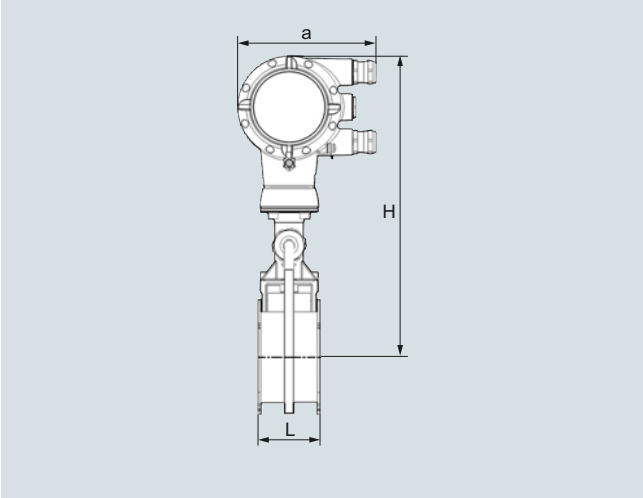

SITRANS FX330 (Vortex), Sandwich version with pressure sensor, front view

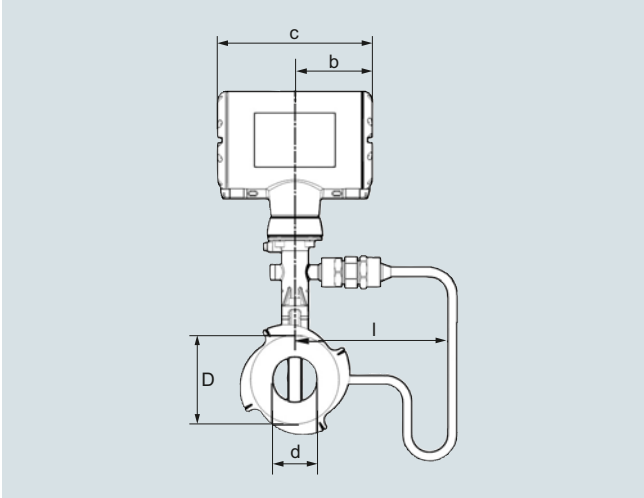

SITRANS FX330 (Vortex), Sandwich version with pressure sensor, side view

Sandwich version EN

Size	Pressure rating	Dimensions [mm (inch)]								Weight [kg (lb)]	
DN	PN	a	b	c	d	D	L	H	l	Flowmeter (without pressure sensor)	Flowmeter (with pressure sensor)
15	16 ... 100	133 (5.24)	105 (4.13)	179 (7.05)	16 (0.63)	45 (1.77)	65 (2.56)	265 (10.43)	174.25 (6.86)	3.5 (7.72)	4.1 (9.04)
25	16 ... 100	133 (5.24)	105 (4.13)	179 (7.05)	24 (0.94)	65 (2.56)	65 (2.56)	265 (10.43)	174.25 (6.86)	4.3 (9.48)	4.9 (10.80)
40	16 ... 100	133 (5.24)	105 (4.13)	179 (7.05)	38 (1.50)	82 (3.23)	65 (2.56)	270 (10.63)	174.5 (6.87)	4.9 (10.80)	5.5 (12.13)
50	16 ... 100	133 (5.24)	105 (4.13)	179 (7.05)	50 (1.97)	102 (4.02)	65 (2.56)	275 (10.83)	174.5 (6.87)	6 (13.23)	6.6 (14.55)
80	16 ... 100	133 (5.24)	105 (4.13)	179 (7.05)	74 (2.91)	135 (5.31)	65 (2.56)	290 (11.42)	174.25 (6.86)	8.2 (18.08)	8.8 (19.40)
100	16 ... 100	133 (5.24)	105 (4.13)	179 (7.05)	97 (3.82)	158 (6.22)	65 (2.56)	310 (12.20)	176.5 (6.95)	9.5 (20.94)	10.1 (22.27)

Sandwich version ANSI

Size	Pressure rating	Dimensions [inch]								Weight [lb]	
DN	Class	a	b	c	d	D	L	H	l	Flowmeter (without pressure sensor)	Flowmeter (with pressure sensor)
½"	150, 300	5.32	4.26	7.25	0.63	1.77	2.56	10.43	6.82	7.72	9.04
½"	600	5.32	4.26	7.25	0.55	1.77	2.56	10.43	6.82	7.72	9.04
1"	150, 300, 600	5.32	4.26	7.25	0.94	2.56	2.56	10.43	6.82	9.48	10.80
1½"	150, 300, 600	5.32	4.26	7.25	1.50	3.23	2.56	10.63	6.82	10.80	12.13
2"	150, 300, 600	5.32	4.26	7.25	1.97	4.02	2.56	10.83	6.82	13.23	14.55
3"	150, 300, 600	5.32	4.26	7.25	2.91	5.31	2.56	11.42	6.82	18.08	19.40
4"	150, 300, 600	5.32	4.26	7.25	3.82	6.22	2.56	12.20	6.82	20.94	22.27

© Siemens 2020

Dimensional drawings (continued)

Remote version

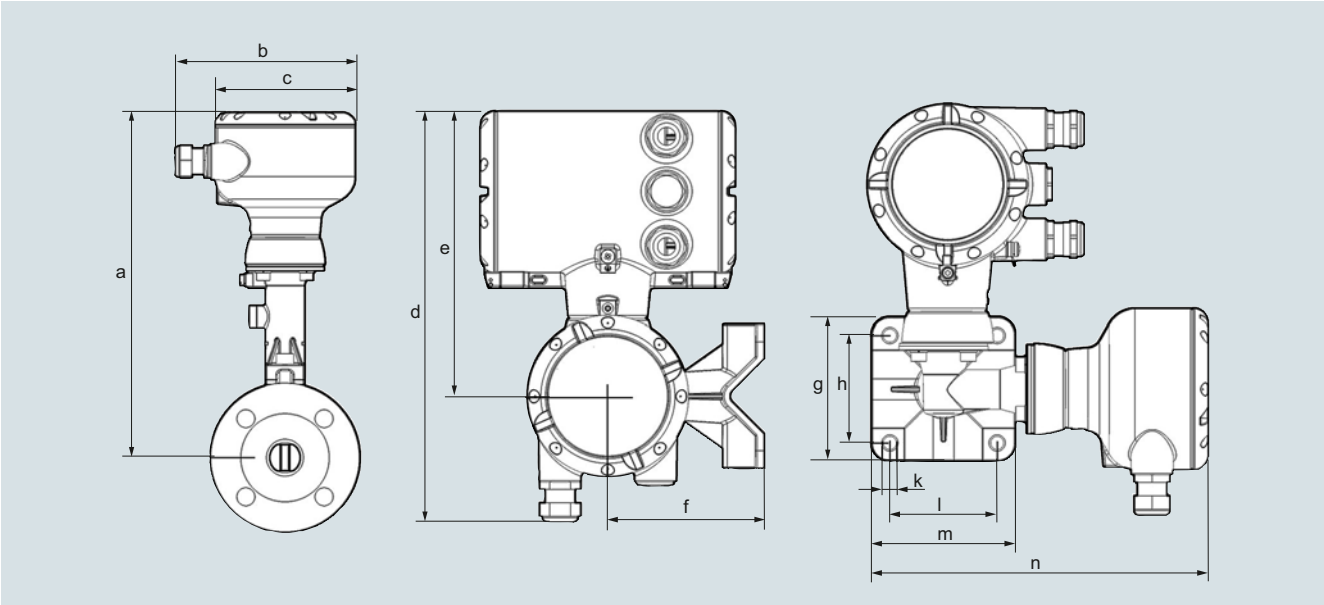

SITRANS FX330 (Vortex), Remote version

Dimension a

	Flanged and Sandwich version						Flanged version			
DN	**15**	**25**	**40**	**50**	**80**	**100**	**150**	**200**	**250**	**300**
	½"	**1"**	**1½"**	**2"**	**3"**	**4"**	**6"**	**8"**	**10"**	**12"**
[mm]	265.7	265.2	269.2	275.2	287.2	303.7	323.2	348.9	375.7	399.7
[inch]	10.5	10.4	10.6	10.8	11.3	12.0	12.7	13.7	14.8	15.7

Dimension a F1/2R

	Flanged version									
DN	**15**	**25**	**40**	**50**	**80**	**100**	**150**	**200**	**250**	**300**
	½"	**1"**	**1½"**	**2"**	**3"**	**4"**	**6"**	**8"**	**10"**	**12"**
F1R[1)] [mm]	-	315.7	315.2	319.2	325.2	337.2	353.7	373.2	398.9	425.7
F1R[1)] [inch]	-	12.4	12.4	12.6	12.8	13.3	13.9	14.7	15.7	16.8
F2R[2)] [mm]	-	-	315.7	315.2	319.2	325.2	337.2	353.7	373.2	398.9
F2R[2)] [inch]	-	-	12.4	12.4	12.6	12.8	13.3	13.9	14.7	15.7

Dimension b ... n

	b	c	d	e	f	g	h	j	k	l	m	n
[mm]	139	108	276	191	105	97	72	108	9	72	97	226
[inch]	5.46	4.25	10.9	7.53	4.14	3.82	2.84	4.25	0.35	2.84	3.82	8.90

© Siemens 2020

Dimensional drawings (continued)

Flow tables

Measuring Range Limits

Water

Size DN to EN 1092-1	DN to NSI B16.5	Q_{min} EN 1092-1 [m^3/h]	Q_{max} EN 1092-1 [m^3/h]	Q_{min} ANSI B16.5 [m^3/h]	Q_{max} ANSI B16.5 [m^3/h]
15	½"	0.45	5.07	0.44	4.94
25	1"	0.81	11.40	0.81	11.40
40	1½"	2.04	28.58	2.04	28.58
50	2"	3.53	49.48	3.53	49.48
80	3"	7.74	108.37	7.74	108.37
100	4"	13.30	186.22	13.30	186.21
150	6"	30.13	421.86	30.13	421.86
200	8"	56.60	792.42	56.60	792.42
250	10"	90.48	1 266.8	90.48	1 266.8
300	12"	131.41	1 839.8	131.41	1 839.8

Values based on water at 20 °C (68 °F)

Air

Size DN to EN 1092-1	DN to ANSI B16.5	Q_{min} EN 1092-1 [m^3/h]	Q_{max} EN 1092-1 [m^3/h]	Q_{min} ANSI B16.5 [m^3/h]	Q_{max} ANS B16.5 [m^3/h]
15	½"	6.80	25.33	6.72	24.70
25	1"	10.20	81.43	10.20	81.43
40	1½"	25.35	326.63	25.35	326.63
50	2"	43.89	565.49	43.89	565.49
80	3"	96.14	1 238.64	96.14	1 238.6
100	4"	165.19	2 128.27	165.19	2 128.27
150	6"	374.23	4 821.60	374.23	4 821.6
200	8"	702.95	9 056.8	702.95	9 056.8
250	10"	1 123.7	14 478.0	1 123.7	14 478.0
300	12"	1 632.1	21 028.0	1 632.1	21 028.0

Values based on air at 20 °C (68 °F) and 1.013 bar_{abs} (14.7 psi_{abs})

Flow rate limits

Product	Nominal sizes to EN	 to ANSI	Minimum flow rates [m/s]	Maximum flow rates [m/s]
Liquids	DN 15 … DN 300	DN ½"…DN 12"	$0.5 \times (998/\rho)^{0.51)}$	$7 \times (998/\rho)^{0.47\ 1)}$
Gas, steam/vapor	DN 15 … DN 300	DN ½"…DN 12"	$6 \times (1.29/\rho)^{0.52)}$	$7 \times (998/\rho)^{0.47\ 3)}$

ρ = operating density [kg/m^3]

1) Minimum flow rate 0.3 m/s (0.984 ft/s) - maximum flow rate 7 m/s (23 ft/s)
2) Minimum flow rate 2 m/s (6.6 ft/s)
3) Maximum flow rate 80 m/s (262 ft/s); DN 15: 45 m/s (148 ft/s) and DN 25: 70 m/s (230 ft/s)

© Siemens 2020

Dimensional drawings (continued)

Measuring range saturated steam: 1 to 7 bar

Overpressure [bar]		**1**		**3.5**		**5.2**		**7**	
Density [kg/m³]		**1.13498**		**2.4258**		**3.27653**		**4.16732**	
Temperature [°C]		**120.6**		**148.2**		**160.4**		**170.6**	
Flow [kg/h]		**min.**	**max.**	**min.**	**max.**	**min.**	**max.**	**min.**	**max.**
DN to EN 1092-1	**DN to ASME B16.5**								
15	½"	5.87	28.75	7.68	61.46	8.93	83.01	10.06	105.57
25	1"	11.82	92.42	17.28	197.53	20.09	266.81	22.66	339.35
40	1½"	29.64	370.71	43.33	792.33	50.63	1 070.2	56.80	1 361.2
50	2"	51.31	641.82	75.02	1 371.8	87.19	1 852.8	98.33	2 356.6
80	3"	112.41	1 405.8	164.33	3 004.7	191.00	4 058.4	215.39	5 161.8
100	4"	193.14	2 415.5	282.36	5 162.7	328.16	6 973.3	370.09	8 869.2
150	6"	437.56	5 472.4	639.69	11 696.0	743.45	15 798.0	838.44	20 093.0
200	8"	821.9	10 279.0	1 201.6	21 970.0	1 396.5	29 675.0	1 574.9	37 743.0
250	10"	1 313.9	16 433.0	1 920.9	35 122.0	2 232.5	47 439.0	2 517.7	60 337.0
300	12"	1 908.3	23 866.0	2 789.8	51 010.0	3 242.4	68 899.0	3 656.6	87 630.0

Measuring range saturated steam: 10.5 to 20 bar

Overpressure [bar]		**10.5**		**14.0**		**17.5**		**20.0**	
Density [kg/m³]		**5.88803**		**7.60297**		**9.31702**		**10.5442**	
Temperature [°C]		**186.2**		**198.5**		**208.7**		**215.0**	
Flow [kg/h]		**min.**	**max.**	**min.**	**max.**	**min.**	**max.**	**min.**	**max.**
DN to EN 1092-1	**DN to ANSI B16.5**								
15	½"	12.78	149.17	16.51	192.61	20.23	236.04	22.89	267.12
25	1"	26.93	479.46	30.60	619.11	33.87	758.69	36.04	858.62
40	1½"	67.51	1 878.2	76.72	2 150.7	84.93	2 395.3	90.35	2 557.7
50	2"	116.89	3 251.7	132.82	3 723.4	147.03	4 147.0	156.42	4 428.1
80	3"	256.03	7 122.4	290.93	8 155.8	322.06	9 083.7	342.62	9 699.3
100	4"	439.91	12 238	499.90	14 013.0	553.38	15 608.0	588.69	16 666.0
150	6"	996.62	27 725.0	1 132.5	31 747.0	1 253.7	35 359.0	1 333.7	37 756.0
200	8"	1 872.1	52 079.0	2 127.3	59 634.0	2 354.9	66 419.0	2 505.2	70 921.0
250	10"	2 992.7	83 254.0	3 400.7	95 333.0	3 764.6	106 180.0	4 004.9	113 380.0
300	12"	4 346.5	120 920.0	4 939.1	138 460.0	5 467.5	154 210.0	5 816.5	164 660.0

© Siemens 2020

Dimensional drawings (continued)

Measuring range saturated steam: 15 to 100 psig

Overpressure [psig]		**15**		**50**		**75**		**100**	
Density [lbs/ft³]		**0.0719**		**0.1497**		**0.2036**		**0.2569**	
Temperature [°F]		**249.98**		**297.86**		**320.36**		**338.184**	
Flow [lbs/h]		**min.**	**max.**	**min.**	**max.**	**min.**	**max.**	**min.**	**max.**
DN to EN 1092-1	**DN to ANSI B16.5**								
15	½"	12.95	64.35	16.83	133.87	19.62	182.02	22.04	229.63
25	1"	26.25	206.83	37.86	430.30	44.15	585.06	49.59	738.09
40	1½"	65.81	829.61	94.92	1 726	110.68	2 346.7	124.32	2 960.5
50	2"	113.94	1 436.3	164.34	2 988	191.63	4 062.9	215.23	5 125.6
80	3"	249.57	3 146.1	360.00	6 545.3	419.74	8 899.4	471.45	11 227
100	4"	428.81	5 405.7	618.51	11 246	721.21	15 291	810.06	19 291
150	6"	971.47	12 246	1 401.2	25 478	1 633.9	34 642	1 835.2	43 703
200	8"	1 824.8	23 004	2 632.1	47 859	3 069.1	65 072	3 447.2	82 092
250	10"	2 917.2	36 774	4 207.7	76 508	4 906.4	104 030	5 510.8	131 230
300	12"	4 236.8	53 410	6 111.1	111 120	7 125.8	151 080	8 003.6	190 600

Measuring range saturated steam: 150 to 300 psig

Overpressure [psig]		**150**		**200**		**250**		**300**	
Density [lbs/ft³]		**0.3627**		**0.4681**		**0.5735**		**0.6792**	
Temperature [°F]		**366.08**		**388.04**		**406.22**		**422.06**	
Flow [lbs/h]		**min.**	**max.**	**min.**	**max.**	**min.**	**max.**	**min.**	**max.**
DN to EN 1092-1	**DN to ANSI B16.5**								
15	½"	27.79	324.21	35.86	418.47	43.94	512.66	52.04	607.12
25	1"	58.93	1 042.1	66.94	1 345.1	74.10	1 647.8	80.63	1 951.5
40	1½"	147.72	4 107.2	167.83	4 702.8	185.76	5 237	202.15	5 728
50	2"	255.75	7 111.9	290.56	8 141.9	321.60	9 066.8	350.00	9 917
80	3"	560.19	15 578	636.44	17 834	704.43	19 860	766.60	21 722
100	4"	962.54	26 766	1 093.5	30 643	1 210.4	34 124	1 317.2	37 324
150	6"	2 180.6	60 639	2 477.4	69 421	2 742.1	77 307	2 984	84 556
200	8"	4 096.1	113 900	4 653.6	130 400	5 150.7	145 210	5 605.2	158 830
250	10"	6 548.1	182 090	7 439.3	208 460	8 234.1	232 140	8 960.6	253 910
300	12"	9 510.2	264 460	10 805	302 760	11 959	337 150	13 014	368 770

© Siemens 2020

Overview

SITRANS FVA250 variable area meter

Benefits

- Standard version available at short notice
- Robust all-metal valve with impact-resistant housing cover
- Can also be used for corrosive and flammable media
- Can be used at high pressures and temperatures
- Product and percentage scales
- Can be optionally fitted with heating and cooling sheaths
- Contamination-resistant guiding for float

Application

The devices are particularly suitable for measuring:

- Water
- Liquids
- Anti-corrosives and lubricants
- Solvents
- Saturated and superheated steam
- Food and beverages
- Industrial gases

Design

Due to its full metal design, the SITRANS FVA250 variable area meter with a standard length of 250 mm (9.84 inch) can be used to measure many different types of liquids and gases passing through closed piping. The robust design means that it can also be used in harsh conditions. The various types of flange connections, linings and float materials satisfy the requirements of the pharmaceutical and chemical industries.

The measured value is displayed directly on the scale with the standard version. For process monitoring and control, the device can be equipped with a transmitter (MEM) as well as limit switches.

Function

Flow measurement with the SITRANS FVA250 is performed according to the float principle. The flowing medium lifts the conical float in the measuring ring. This increases the ring gap until an equilibrium is established between the buoyant force of the medium and the weight of the float. The height of the float is directly proportional to the flow rate. The movement of the float is transmitted from one magnet to another magnet in the display unit outside of the measuring tube.

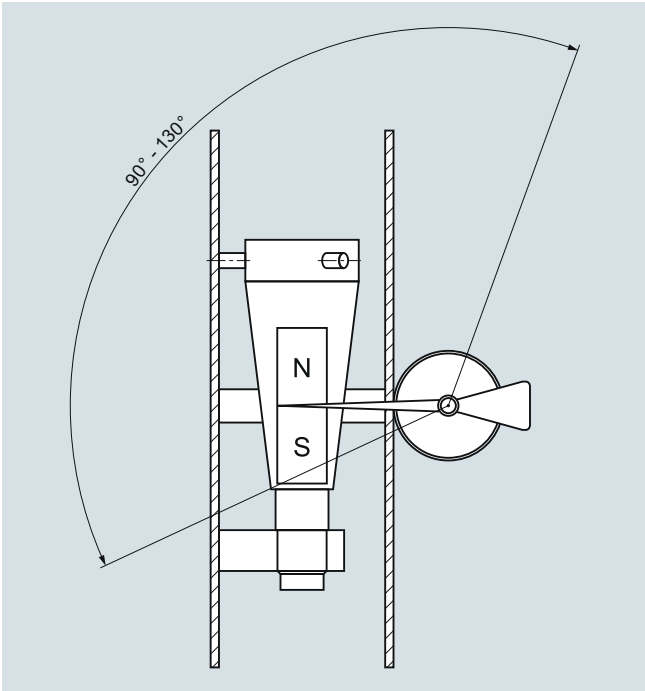

Measuring cone/scale angle

© Siemens 2020

Technical specifications

Application	See page 3/395
Design and function	See page 3/395
Principle of measurement	Variable-area flowmeter
Input	
Measuring range	See table on page 3/397
Pressure ratings	PN 16 to PN 100 (232 to 1 450 psi) depending on the version (see table on page 3/397)
Installation / flow direction	Vertical/from bottom to top
Rated conditions	
Ambient temperature • With local display • With limit switches • With electric remote encoder (MEM)	 -40 ... +80 °C (-40 ... +176 °F) -40 ... +65 °C (-40 ... +149 °F) -40 ... +70 °C (-40 ... +158 °F)
Measuring accuracy acc. to VDI/VDE 3513-2 • For liquids • For gases	 ± 1.6 % (q_G = 50 %) ± 2.0 % (q_G = 50 %)
Reproducibility	0.5 % of the measuring range limit (URV)
Operating temperature	See page 3/397
Operating pressure	Minimum operating pressure > 2x pressure drop (see table on page 3/397)
Design	
Flanges	EN 1092-1, ANSI B16.5
Material • Fitting • Float • Wetted parts materials	 Stainless steel, Hastelloy Stainless steel, Hastelloy, PTFE Stainless steel, PTFE, Hastelloy depending on version
Degree of protection (display unit) • Display unit made of aluminum • Display unit made of stainless steel	 IP65 IP66
Electromagnetic compatibility • EN 61000-6-2: 2011 • EN 61000-6-3 • EN 55011: 2011 • NAMUR recommendation	 Interference immunity industrial sector Interference immunity residential sector Group 1, Class B NE 21

Classification according to pressure equipment directive (PED 2014/68/EU)

	Article No. 7ME586.-	Permissible media	Category
DN 15	xAxxx-xxxx	Gases of fluid group 1 and liquids of fluid group 1	Article 4.3
DN 20	xBxxx-xxxx		Article 4.3
DN 25	xCxxx-xxxx		Article 4.3
DN 32	xDxxx-xxxx		III
DN 40	xExxx-xxxx		III
DN 50	xFxxx-xxxx		III
DN 65	xGxxx-xxxx		III
DN 80	xHxxx-xxxx		III
DN 100	xJxxx-xxxx		III

Technical specifications of contacts

Limit switch	
Cable gland	M20x1.5
Auxiliary power supply	5 ... 25 V DC
Isolation (2 contacts)	Electrically isolated
Limit switch • Switching function	SJ3.5-N-BU NAMUR NC
Nominal voltage U_O	8.2 V DC (R_i approx. 1 kΩ)
Explosion protection	II 2G EEx ia IIC T6 - T4 Gb
EC Type Examination Certificate for Directive 2014/34/EU	PTB 99 ATEX 2219 X
Transmitter (MEM) with 4 to 20 mA, pulse output and limit switch	
Cable gland	M20x1.5
Auxiliary power supply	14 ... 30 V DC
Analog output	4 ... 20 mA (2-wire)
Binary output • Pulses • Limit switch	Pulses, limit switch Max. pulse rate 10 Hz SJ3.5-N-BU (NAMUR, IEC 60947-5-6:1999)
Temperature influence	≤ ± 0.5% of the measuring range limit (URV)/10 K
Explosion protection	II 2G Ex ia IIC T6 Gb
EC Type Examination Certificate for Directive 2014/34/EU	BVS 07 ATEX E 033
Transmitter (MEM) PROFIBUS PA	
Cable gland	M20x1.5
Auxiliary power supply	10 ... 25 V DC
Basic current	< 16.5 mA
Fault current	< 18 mA
Transfer rate	31.25 Kbaud
Temperature influence	≤ ± 0.5% of the measuring range limit (URV)/10 K
Explosion protection	II 2G Ex ia IIC T6 Gb
EC Type Examination Certificate for Directive 2014/34/EU	BVS 07 ATEX E 033

Float damping

Float damping is recommended

- Generally for gas measurement
- When air bubbles in the medium cannot be avoided
- When there are pressure surges in the lines caused by a delay in the flow, for example, due to rapid throttling or blocking
- When turbulence, pulsations or other instabilities cause the float to vibrate
- When the flow pressure cannot be built up slowly
- When vibrations in the line cannot be avoided

© Siemens 2020

Technical specifications (continued)

Measuring range availability guide

Version	CF-S	EF-H	FF-P
Wetted parts materials	Mat. No. 1.4404/AISI 316L	Hastelloy	PTFE
Fitting	Mat. No. 1.4404/AISI 316L	≤ DN 25 (1"): Hastelloy > DN 25 (1"): Hastelloy/Mat. No. 1.4404/AISI 316L	Mat. No. 1.4404/AISI 316L with PTFE lining
Flange	Mat. No. 1.4404/AISI 316L	≤ DN 25 (1"): Hastelloy > DN 25 (1"): Hastelloy/Mat. No. 1.4404/AISI 316L	Mat. Nno. 1.4404/AISI 316L with PTFE lining
Float/flow tube	Mat. No. 1.4404/AISI 316L	Hastelloy	PTFE
Max. media temperature	-20 ... +200 °C (-4 ... +392 °F) (optional -80 ... +350 °C (-112 ... +662 °F))		-20 ... +125 °C (-4 ... +257 °F)
Nominal pressure	DN15 ... 50 (1/2" ... 2") PN 40 (580 psi) DN 65 ... 100 (2 1/2" ... 4") PN 16 (232 psi)	DN15 ... 50 (1/2" ... 2") PN 40 (580 psi) DN 65 ... 100 (2 1/2" ... 4") PN 16 (232 psi)	PN 16 (232 psi)
Reference data for measuring range specifications	Fluid in l/h with density: 1.0 kg/l, temperature 20 °C (68 °F), viscosity: 1 mPa.s Gas in m^3/h with density: 1.293 kg/m^3, temperature 0 °C (32 °F), viscosity: 0.0181 mPa·s, p_e = 0 bar (0 psi)		

Order code	Pressure loss [mbar]							Measuring ranges (dynamic 1:10)			
	Measurement cone							Liquids		Gases	
	1	2	3	4	5	6	7	[l/h]	[USgpm]	[m^3/h]	[scfm]
10	40[1)]	-	-	-	-	-	-	0.5 ... 5	0.0022 ... 0.022	0.015 ... 0.15	0.0088 ... 0.088
11	44[1)]	-	-	-	-	-	-	0 ... 10	0.0044 ... 0.044	0.03 ... 0.3	0.0177 ... 0.177
12	40[1)]	-	-	-	-	-	-	1.6 ... 16	0.007 ... 0.07	0.045 ... 0.48	0.0265 ... 0.283
13	40[1)]	-	-	-	-	-	-	2.5 ... 25	0.11 ... 0.11	0.075 ... 0.75	0.0441 ... 0.441
14	40[1)]	-	-	-	-	-	-	4 ... 40	0.018 ... 0.18	0.13 ... 1.3	0.0765 ... 0.765
15	-	40[2)]	-	-	-	-	-	5 ... 50	0.022 ... 0.22	0.15 ... 1.5	0.0883 ... 0.883
16	-	40[2)]	-	-	-	-	-	7 ... 70	0.031 ... 0.31	0.2 ... 2.1	0.12 ... 1.24
17	-	60	-	-	-	-	-	10 ... 100	0.044 ... 044	0.3 ... 3	0.177 ... 1.77
20	-	60	-	-	-	-	-	16 ... 160	0.07 ... 0.7	0.5 ... 4.6	0.29 ... 2.71
21	-	60	-	-	-	-	-	25 ... 250	0.11 ... 1.1	0.07 ... 7	0.412 ... 4.12
22	-	70	-	-	-	-	-	40 ... 400	0.176 ... 1.76	1.0 ... 11	0.589 ... 6.47
23	-	80	-	-	-	-	-	60 ... 600	0.264 ... 2.64	1.7 ... 17	1 ... 10
24	-	-	60	-	-	-	-	100 ... 1 000	0.44 ... 4.4	2 ... 30	1.77 ... 17.66
25	-	-	70	-	-	-	-	160 ... 1 600	0.7 ... 7	3 ... 46	2.35 ... 27.07
26	-	-	100	50[2)]	-	-	-	250 ... 2 500	1.1 ... 11	6 ... 70	4.12 ... 41.2
27	-	-	240[2)]	120[2)]	80	-	-	400 ... 4 000	1.76 ... 17.6	10 ... 110	6.47 ... 64.74
30	-	-	-	180[2)]	90	-	-	600 ... 6 000	2.64 ... 26.4	16 ... 170	10 ... 100
31	-	-	-	-	110	-	-	1 000 ... 10 000	4.4 ... 44	28 ... 290	17.1 ... 170.7
32	-	-	-	-	230	70	-	1 600 ... 16 000	7 ... 70	45 ... 460	27.1 ... 270.7
33	-	-	-	-	230	70[2)]	-	2 000 ... 20 000	8.8 ... 88	55 ... 550	32.4 ... 323.7
34	-	-	-	-	500[2)]	100	-	2 500 ... 25 000	11 ... 110	69 ... 700	41.2 ... 412
35	-	-	-	-	-	350[2)]	120	4 000 ... 40 000	17.6 ... 176	109 ... 1 100	64.7 ... 647.4
36	-	-	-	-	-	350[2)]	120[2)]	5 000 ... 50 000	22 ... 220	134 ... 1 350	79.5 ... 794.6
37	-	-	-	-	-	-	360[2)]	6 000 ... 60 000	26.4 ... 264	169 ... 1 700	100 ...1 000
40	-	-	-	-	-	-	600[2)]	8 000 ... 80 000	35.2 ... 352	239 ... 2 400	141.3 ... 1 413
41	-	-	-	-	-	-	600[2)]	10 000 ... 100 000	44 ... 440	299 ... 3 000	176.6 ... 1 766

- Not available

[1)] Not available for EF-H and FF-P

[2)] Not available for FF-P

Note: Female thread connector (DIN ISO 228, NPT ANSI B 1.20.1) not available for FF-P.

© Siemens 2020

Technical specifications (continued)

Sensor size availability guide

Type CF-S and EF-H

Order code	Diameter		Flow tube						
	Flange		1	2	3	4	5	6	7
A	DN 15	½"	•[1]	•	•	-	-	-	-
B	DN 20	¾"	•[1]	•	•	-	-	-	-
C	DN 25	1"	•[1]	•	•	•[2]	-	-	-
D	DN 32	1¼"	•[1]	•	•	•	-	-	-
E	DN 40	1½"	•[1]	•	•	•	•[2]	-	-
F	DN 50	2"	•[1]	•	•	•	•	-	-
G	DN 65	2½"	-	-	•	•	•	•[2]	-
H	DN 80	3"	-	-	-	•	•	•	-
J	DN 100	4"	-	-	-	-	•	•	•

Type FF-P

Order code	Diameter		Flow tube						
	Flange		1	2	3	4	5	6	7
A	DN 15	½"	-	•[2]	-	-	-	-	-
B	DN 20	¾"	-	•[3]	-	-	-	-	-
C	DN 25	1"	-	•	•	-	-	-	-
D	DN 32	1¼"	-	-	-	-	-	-	-
E	DN 40	1½"	-	-	-	•	-	-	-
F	DN 50	2"	-	-	-	-	•	-	-
G	DN 65	2½"	-	-	-	-	-	-	-
H	DN 80	3"	-	-	-	-	-	•	-
J	DN 100	4"	-	-	-	-	-	-	•

Type CF-S and EF-H

Order code	Diameter		Flow tube						
	Female thread		1	2	3	4	5	6	7
Q	G ¼"	¼" NPT	•	•	-	-	-	-	-
R	G 3/8"	3/8" NPT	•	•	-	-	-	-	-
S	G ½"	½" NPT	•	•	•	•	-	-	-
T	G ¾"	¾" NPT	•	•	•	•	-	-	-
U	G 1"	1" NPT	•	•	•	•	•	-	-
V	G 1¼"	1¼" NPT	•	•	-	•	•	-	-
W	G 1½"	1½" NPT	-	-	-	•	•	-	-
X	G 2"	2" NPT	-	-	-	-	•	-	-

Note: Female thread not available for type FF-P.

• Available

- Not available

[1] Not available for type EF-H.

[2] Only with EN 1092-1 flange.

[3] Only with ANSI B16.5 flange.

© Siemens 2020

Technical specifications (continued)

Flange sealing surface selection guide

Order code	Diameter flange	Flow tube						
	EN 1092-1	**1**	**2**	**3**	**4**	**5**	**6**	**7**
A	DN 15	**N11**	**N11**	**N11**	-	-	-	-
B	DN 20	**N12**	**N12**	**N12**	-	-	-	-
C	DN 25	-	-	**N13**	**N13**	-	-	-
D	DN 32	-	-	-	**N14**	-	-	-
E	DN 40	-	-	-	**N15**	**N15**	-	-
F	DN 50	-	-	-	-	**N16**	-	-
G	DN 65	-	-	-	-	-	**N17**	-
H	DN 80	-	-	-	-	-	**N18**	-
J	DN 100	-	-	-	-	-	-	**N19**

Type FF-P

Order code	Diameter flange	Flow tube						
	ASME B16.5	**1**	**2**	**3**	**4**	**5**	**6**	**7**
A	½"	**N21**	**N21**	**N21**	-	-	-	-
B	¾"	**N22**	**N22**	**N22**	-	-	-	-
C	1"	-	-	**N23**	-	-	-	-
D	1¼"	-	-	-	**N24**	-	-	-
E	1½"	-	-	-	**N25**	-	-	-
F	2"	-	-	-	-	**N26**	-	-
G	2½"	-	-	-	-	**N27**	-	-
H	3"	-	-	-	-	-	**N28**	-
J	4"	-	-	-	-	-	-	**N29**

© Siemens 2020

Selection and ordering data

		Article No.										
SITRANS FVA250 Full metal variable area meter ↗		**7ME586**	■	-	■	■	■	■	-	■	■	■	■
↗Click on the Article No. for the online configuration in the PIA Life Cycle Portal.													
Flow tube													
Liquid	Gas												
5 ... 40 l/h	0.15 ... 1.3 m^3/h		1										
50 ... 600 l/h	1.5 ... 17 m^3/h		2										
1 000 ... 4 000 l/h	30 ... 110 m^3/h		3										
2.5 ... 6 m^3/h	70 ... 170 m^3/h		4										
4 ... 25 m^3/h	30 ... 700 m^3/h		5										
16 ... 50 m^3/h	460 ... 1 350 m^3/h		6										
60 ... 100 m^3/h	1 700 ... 3 000 m^3/h		7										
Design													
Type: CF-S (standard)					2								
Fitting: Stainless steel Flange: Stainless steel Float: Stainless steel													
Type: EF-H					4								
Fitting: Stainless steel, Hastelloy Flange: Stainless steel, Hastelloy Float: Hastelloy													
Type: FF-P					5								
Fitting: Stainless steel with PTFE lining Flange: Stainless steel with PTFE lining Float: PTFE													
Diameter													
DN 15/ANSI ½“						A							
DN 20/ANSI ¾“						B							
DN 25/ANSI 1“						C							
DN 32/ANSI 1¼“						D							
DN 40/ANSI 1½“						E							
DN 50/ANSI 2“						F							
DN 65/ANSI 2½“						G							
DN 80/ANSI 3“						H							
DN 100/ANSI 4“						J							
Female thread ¼"						Q							
Female thread 3/8"						R							
Female thread ½"						S							
Female thread ¾"						T							
Female thread 1"						U							
Female thread 1¼"						V							
Female thread 1½"						W							
Female thread 2"						X							
Process connection													
EN 1092-1, PN 16, Form B1							B						
EN 1092-1, PN 40, Form B1							D						
EN 1092-1, PN 63, Form B2							E						
EN 1092-1, PN 100, Form B2							F						
ANSI B16.5, class 150 RF							J						
ANSI B16.5, class 300 RF							K						
ANSI B16.5, class 600 RF							L						
ISO 228-1 G pipe thread PN 63							T						
ISO 228-1 G pipe thread PN 100							U						
ANSI B1.20.1 NPT pipe thread 900 lbs							N						
ANSI B1.20.1 NPT pipe thread 1500 lbs							P						

© Siemens 2020

Selection and ordering data

				Article No.
SITRANS FVA250 Full metal variable area meter				**7ME586** ■ - ■ ■ ■ ■ ■ - ■ ■ ■ ■
Measuring ranges				
Liquids		Gases		
l/h	(USgpm)	m^3/h	(scfm)	
0.5 ... 5	(0.0022 ... 0.022)	0.015 ... 0.15	(0.0088 ... 0.088)	**1 0**
0 ... 10	(0.0044 ... 0.044)	0.03 ... 0.3	(0.0177 ... 0.177)	**1 1**
1.6 ... 16	(0.007 ... 0.07)	0.045 ... 0.45	(0.0265 ... 0.283)	**1 2**
2.5 ... 25	(0.011 ... 0.11)	0.075 ... 0.75	(0.0441 ... 0.441)	**1 3**
4 ... 40	(0.018 ... 0.18)	0.13 ... 1.3	(0.0765 ... 0.765)	**1 4**
5 ... 50	(0.022 ... 0.22)	0.15 ... 1.5	(0.0883 ... 0.883)	**1 5**
7 ... 70	(0.031 ... 0.31)	0.2 ... 2	(0.12 ... 1.24)	**1 6**
10 ... 100	(0.044 ... 0.44)	0.3 ... 3	(0.177 ... 1.77)	**1 7**
16 ... 160	(0.07 ... 0.7)	0.5 ... 5	(0.29 ... 2.71)	**2 0**
25 ... 250	(0.11 ... 1.1)	0.7 ... 7	(0.412 ... 4.12)	**2 1**
40 ... 400	(0.176 ... 1.76)	1.0 ... 11	(0.589 ... 6.47)	**2 2**
60 ... 600	(0.264 ... 2.64)	1.7 ... 17	(1 ... 10)	**2 3**
100 ... 1 000	(0.44 ... 4.4)	2 ... 30	(1.77 ... 17.66)	**2 4**
160 ... 1 600	(0.7 ... 7)	3 ... 46	(2.35 ... 27.07)	**2 5**
250 ... 2 500	(1.1 ... 11)	6 ... 70	(4.12 ... 41.2)	**2 6**
400 ... 4 000	(1.76 ... 17.6)	10 ... 110	(6.47 ... 64.74)	**2 7**
600 ... 6 000	(2.64 ... 26.4)	16 ... 170	(10 ... 100)	**3 0**
1 000 ... 10 000	(4.4 ... 44)	28 ... 290	(17.1 ... 170.7)	**3 1**
1 600 ... 16 000	(7 ... 70)	45 ... 460	(27.1 ... 270.7)	**3 2**
2 000 ... 20 000	(8.8 ... 88	55 ... 550	(32.4 ... 323.7)	**3 3**
2 500 ... 25 000	(11 ... 110)	69 ... 700	(41.2 ... 412)	**3 4**
4 000 ... 40 000	(17.6 ... 176)	109 ... 1 100	(64.7 ... 647.4)	**3 5**
5 000 ... 50 000	(22 ... 220)	134 ... 1 350	(79.5 ... 794.6)	**3 6**
6 000 ... 60 000	(26.4 ... 264)	169 ... 1 700	(100 ... 1 000)	**3 7**
8 000 ... 80 000	(35.2 ... 352)	239 ... 2 400	(141.3 ... 1 413)	**4 0**
10 000 ... 100 000	(44 ... ... 440)	299 ... 3 000	(176.6 ... 1 766)	**4 1**
Display unit / process temperature				
Standard (aluminum) - up to 200 °C with local display/150 °C with electrical output				**0**
Standard (aluminum) with displaced display - up to 350 °C with local display and electrical outputs				**1**
Stainless steel IP66 - up to 200 °C with local display/150 °C with electrical outputs				**2**
Stainless steel IP66 with displaced display - up to 350 °C with local display and electrical outputs				**3**
Heating/cooling jacket				
Without (standard)				**A**
With flange connection EN1092-1 DN 15 PN 40				**B**
With flange connection ½ " ANSI B16.5 Class 150 RF				**C**
Display/outputs				
With display				**A**
With display, 1 limit switch				**B**
With display, 2 limit switches				**C**
With display, HART and 4 to 20 mA				**D**
With display, HART, 4 to 20 mA, 2 limit switches				**E**
With display, HART, 4 to 20 mA, 1 limit switch				**F**
With display, PROFIBUS PA				**G**
Calibration				
Standard calibration				
• Without calibration certificate				**0**
• With calibration certificate				**1**

3

© Siemens 2020

Selection and ordering data

	Order code
Other types of liquid and gas measurement	
Please add "**-Z**" to Article No. and specify Order code.	
Certificates	
Certificate of compliance EN 10204-2.1	**C10**
Factory inspection certificate EN 10204-2.2	**C11**
Material certificate according to EN 10204-3.1	**C12**
Dye penetration test on pressure bearing weldings	**C13**
X-ray test of pressure bearing weldings	**C14**
Pressure test with acceptance test certificate 3.1 according to EN 10204	**C15**
PMI (positive material identification) test of pressure bearing metal parts	**C16**
Float damping	
With float damping	**D01**
Flange sealing surface	
Sealing surface according to EN 1092-1 welding neck flange	
• DN 15	**N11**
• DN 20	**N12**
• DN 25	**N13**
• DN 32	**N14**
• DN 40	**N15**
• DN 50	**N16**
• DN 65	**N17**
• DN 80	**N18**
• DN 100	**N19**
Sealing surface according to ANSI B16.5 welding neck flange	
• ½ inch	**N21**
• ¾ inch	**N22**
• 1 inch	**N23**
• 1¼ inch	**N24**
• 1½ inch	**N25**
• 2 inch	**N26**
• 2½ inch	**N27**
• 3 inch	**N28**
• 4 inch	**N29**
Specification of medium process data (specify in plain text)	
Specification always required for each order: Medium Operating pressure Operating temperature Density (only for customer-specified medium) Viscosity (only for customer-specified medium) Measuring range	**Y01**
TAG plate	
TAG plate in stainless steel (add plain text)	**Y17**
Cleaning to company standard	
Cleaning Class 2, with identification free of oil and grease	**K46**
Cleaning Class 1, with identification free of oil, grease and silicon	**K48**
Approvals	
With ATEX approval	**M51**
Special version (specify in plain text)	**Y99**

Note:

For possible combinations of nominal sizes and flow tube, see table on page 3/403

Operating instructions

	Article No.
SITRANS FVA250	
• English	**A5E03821131**
• German	**A5E32108136**

All literature is available to download for free, in a range of languages, at
https://www.siemens.com/processinstrumentation/documentation

© Siemens 2020

Dimensional drawings

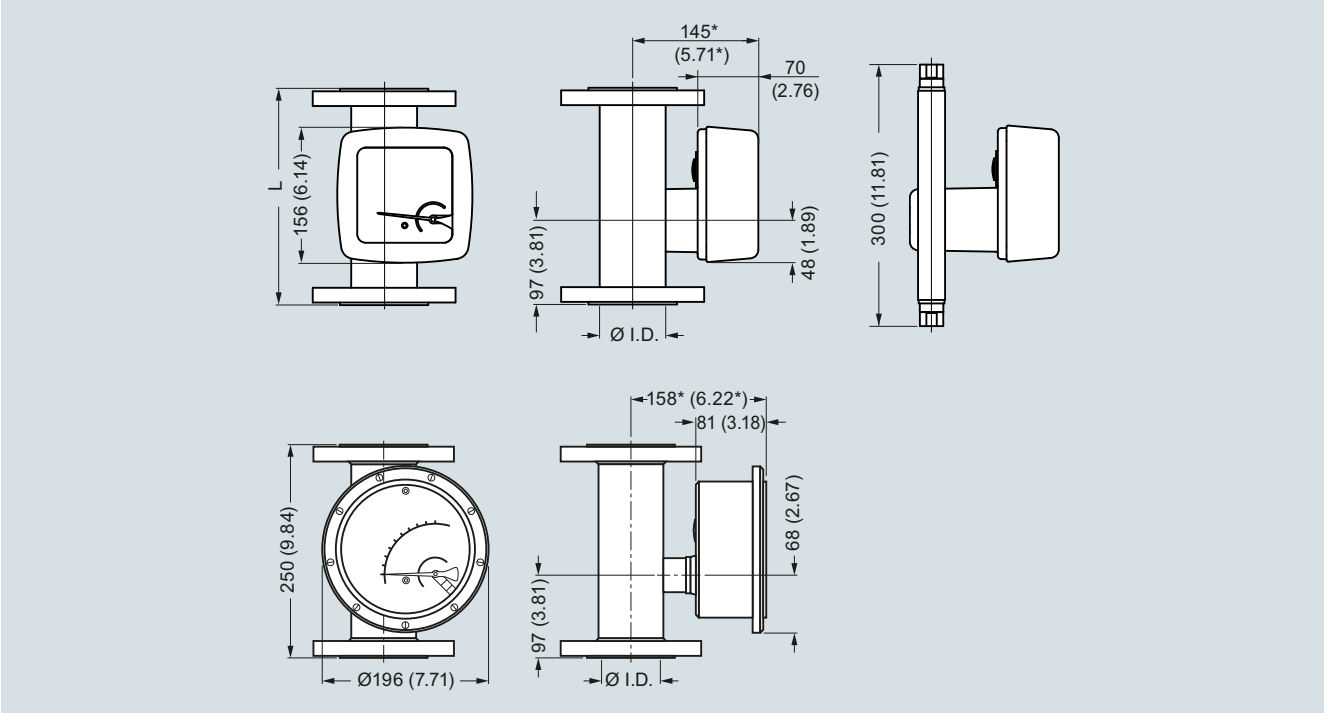

SITRANS FVA250, dimensions in mm

Order code	Diameter flange EN 1092-1	Flow tube I.D. [mm]						
		1	2	3	4	5	6	7
A	DN 15	26[1)]	26[1)]	32[1)]	-	-	-	-
B	DN 20	26[1)]	26[1)]	32[1)]	-	-	-	-
C	DN 25	26	26	32[1)]	46[1)]	-	-	-
D	DN 32	26	26	32	46[1)]	-	-	-
E	DN 40	26	26	32	46[1)]	70[1)]	-	-
F	DN 50	26	26	32	46	70[1)]	-	-
G	DN 65	-	-	32	46	70	102[1)]	-
H	DN 80	-	-	-	46	70	102[1)]	-
J	DN 100	-	-	-	-	70	102	125[1)]

*) +100 mm with pulled-out display unit

[1)] Flange sealing surface not according to EN 1092-1 (Please select N-option for EN 1092-1 compliant flange sealing surface)

Order code	Diameter flange ANSI 1092-1	Flow tube I.D. [mm]						
		1	2	3	4	5	6	7
A	½“	1.02[1)]	1.02[1)]	1.26[1)2)]	-	-	-	-
B	¾“	1.02[1)]	1.02[1)]	1.26[1)]	-	-	-	-
C	1“	1.02	1.02	1.26[1)]	-	-	-	-
D	1¼“	1.02	1.02	1.26	1.81[1)]	-	-	-
E	1½“	1.02	1.02	1.26	1.81[1)]	-	-	-
F	2“	1.02	1.02	1.26	1.81	2.76[1)]	-	-
G	2½“	-	-	1.26	1.81	2.76	-	-
H	3“	-	-	-	1.81	2.76	4.02[1)]	-
J	4“	-	-	-	-	2.76	4.02	4.92[1)]

*) +3.94 inch with pulled-out display unit

[1)] Flange sealing surface not according to ANSI B16.5 (Please select N-option for ANSI B16.5 compliant flange sealing surface)

[2)] Flange with threaded holes

© Siemens 2020

Dimensional drawings (continued)

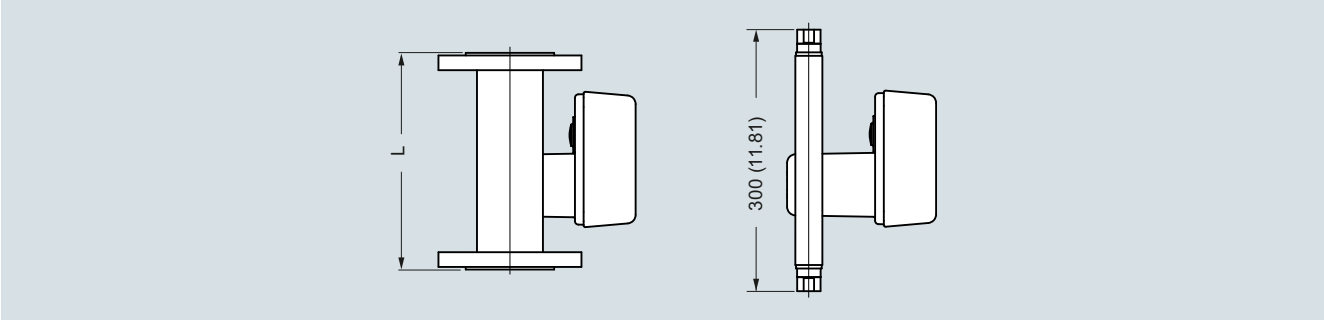

SITRANS FVA250 build-in lenght, dimensions in mm (inch)

Diameter	EN 1092-1				Diameter	ANSI B16.5		
	PN 16	PN 16	PN 16	PN 16		class 150	class 300	class 600
DN 15	-	250 (9.84)	-	250 (9.84)	½"	250 (9.84)	250 (9.84)	250 (9.84)
DN 20	-	250 (9.84)	-	250 (9.84)	¾"	250 (9.84)	250 (9.84)	250 (9.84)
DN 25	-	250 (9.84)	-	250 (9.84)	1"	250 (9.84)	250 (9.84)	250 (9.84)
DN 32	-	250 (9.84)	-	250 (9.84)	1¼"	250 (9.84)	250 (9.84)	250 (9.84)
DN 40	-	250 (9.84)	-	250 (9.84)	1½"	250 (9.84)	250 (9.84)	250 (9.84)
DN 50	-	250 (9.84)	250 (9.84)	300 (11.81)	2"	250 (9.84)	250 (9.84)	300 (11.81)
DN 65	250 (9.84)	250 (9.84)	-	-	2½"	250 (9.84)	300 (11.81)	300 (11.81)
DN 80	250 (9.84)	250 (9.84)	-	-	3"	250 (9.84)	300 (11.81)	300 (11.81)
DN 100	250 (9.84)	250 (9.84)	-	-	4"	250 (9.84)	300 (11.81)	300 (11.81)

- not available

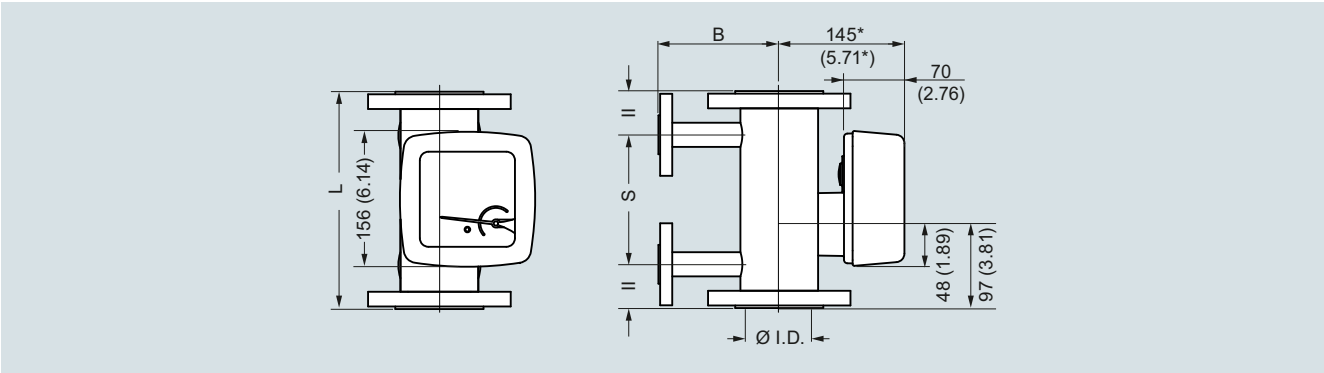

SITRANS FVA250 with heating/cooling jacket, dimensions, in mm (inch)

Diameter		B (flange)		B (Ermeto)		S		Weight	
		mm	inch	mm	inch	mm	inch	kg	lbs
15	½"	110	4.33	53	2.09	150	5.91	3,0	6.6
20	¾"	110	4.33	53	2.09	150	5.91	3,0	6.6
25	1"	110	4.33	58,5	2.3	150	5.91	4,2	9.3
32	1¼"	110	4.33	58,5	2.3	150	5.91	5,2	11.5
40	1½"	130	5.12	63	2.48	150	5.91	6,0	13.2
50	2"	140	5.51	77,5	3.05	150	5.91	7,5	16.5
65	2½"	140	5.51	77,5	3.05	150	5.91	8,5	18.7
80	3"	160	6.3	93,5	3.68	150	5.91	13	28.7
100	4"	175	6.89	110	4.33	120	4.72	18	39.7

* + 100 mm (3.94 inch) with pulled-out display unit

© Siemens 2020

Overview

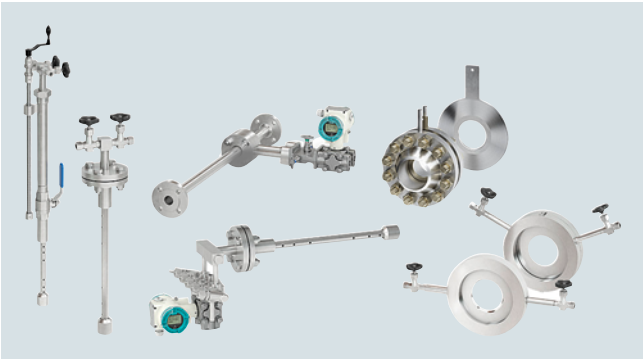

With the SITRANS FP product line Siemens offers a complete solution for differential pressure flow measurements. This well-established technology is suitable for all kinds of applications – liquids, dry or wet gases and steam. Due to the robust though variable design it has been and still is one of the main technologies for flow measurement in various industries.

The new product line offers full flexibility for your processes. SITRANS FP is not a simple substitution of our previous orifice program but a completely new setup. A new digital sizing process ensures minimum effort during presales and full traceability in aftersales. The differential pressure portfolio consists of the averaging pitot tube measuring system SITRANS FPS300 and the differential pressure sensors according to ISO 5167 (orifices) SITRANS FPS200.

© Siemens 2020

Overview (continued)

Product overview

SITRANS FP230/FPS200 primary elements according to ISO 5167

	Product name	Fluid	Design	Pressure tapping	Nominal size	Article No.	Catalog page
	Orifice plate with pressure tappings Compact orifice plate with integrated pressure tappings in carbon or stainless steel	• Gas • Steam • Liquid	• Remote • Compact	Corner tapping	DN 50 ... 500 (2 ...20 inch)	**7ME171.-.....-....**	**3/413**
	Orifice plate with annular chamber Orifice plate with annular chamber pressure tapping in carbon or stainless steel	• Gas • Steam • Liquid	• Remote • Compact	Annular chamber	DN 50 ... 600 (2 ...24 inch)	**7ME172.-.....-....**	**3/421**
	Orifice meter run Orifice meter run with flanges ends in carbon or stainless steel	• Gas • Steam • Liquid	• Remote • Compact	Annular chamber	DN 10 ... 50 (3/8 ...2 inch)	**7ME173.-.....-....**	**3/428**
	Orifice plate Orifice plate for installation between flanges in stainless steel	• Gas • Steam • Liquid	• Remote	Not included	DN 50 ... 600 (2 ...24 inch)	**7ME174.-.....-....**	**3/434**
	Orifice plate with orifice flange Orifice flange pair according to ASME B36.16 with orifice plate in carbon steel (flanges) or stainless steel	• Gas • Liquid	• Remote	In the flange	DN 50 ... 600 (2 ...24 inch)	**7ME175.-.....-....**	**3/437**

SITRANS FP330/FPS300 averaging pitot tube

	Product name	Fuid	Design	Mounting type	Nominal size	Article No.	Catalog page
	Averaging pitot tube for gas and liquids	• Gas • Liquid	• Remote • Compact	Flange, cutting ring	DN 40 ... 4000	**7ME161.-.....-....**	**3/443**
	Averaging pitot tube for steam	• Superheated steam • Saturated steam	• Remote • Compact	Flange	DN 40 ... 2000	**7ME162.-.....-....**	**3/450**
	Averaging pitot tube with FASTLOK The sensor can be assembled and disassembled into the pipe without interrupting plant operation.	• Dry gas • Wet gas • Liquid	• Remote • Compact	Screwed ball valve	DN 40 ... 2000	**7ME163.-.....-....**	**3/455**

© Siemens 2020

Overview (continued)

Sizing procedure

The SITRANS FP sizing tool is available via PIA Life Cycle Portal and supports you in choosing the right device within this portfolio:

https://www.pia-portal.automation.siemens.com

After registration you have access to a web-based sizing procedure generating reference IDs which can be used as application data for the ordering process.

Benefits

- Suitable for a vast range of different applications
- Available as pre-mounted compact system as well as remote parts
- Advanced intelligent sizing procedure
- Web-based sizing and data storage enables full traceability and easy communication
- All benefits of SITRANS P320 available

Application

The SITRANS FP230/330 devices are applicable in a variety of applications:

Chemical industry
- Different materials for aggressive substances
- Namur NE107, self-monitoring and diagnostics
- Namur NE21, increase EMC conformity
- Measurement of various liquid and gas media

Oil & Gas
- Complete setup made of stainless steel
- Robust design and well-established technology
- Measurement of liquid and gas hydrocarbons

Power
- QAL1 approval for continuous emission monitoring applications according to EN 15267
- Specific design for steam applications
- Measurement of steam, condensate and water

and others
- Cost-effective device
- Easy commissioning

Function

Mode of operation

The so-called primary element (orifice plate, averaging pitot tube, etc.) creates a differential pressure. The pressure is transferred to the measuring cell of the differential pressure transmitter. This can be done through a compact installation where the differential pressure transmitter is installed directly at the primary element or as remote installation through separately installed pipes that connect primary element and differential pressure transmitter.

Different types and designs of primary elements for differential pressure flow measurement have been established historically. Traditional primary elements such as orifice meters are harmonized in the international standard ISO 5167. Other primary elements such as the averaging pitot tube follow the same working principle, they are not standardized but are widely used and accepted.

Principle of the differential pressure method

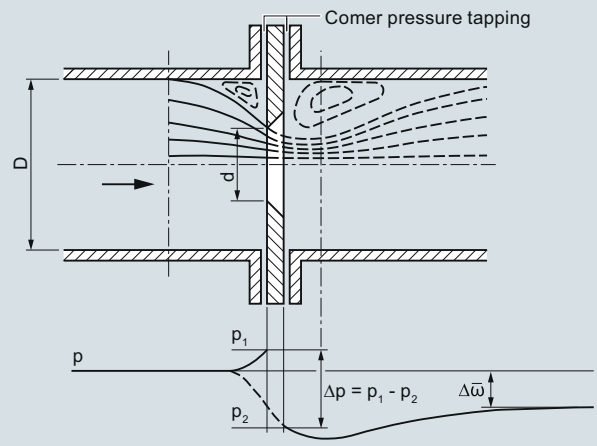

D Internal diameter of pipe
d Diameter of orifice disk aperture
p Pressure in the pipe
p_1 Pressure immediately upstream of primary device
p_2 Pressure immediately downstream of primary device
Δp Differential pressure
$\Delta\bar{\omega}$ Remaining pressure loss

Principle of the differential pressure method: Pressure curve at orifice plate

The differential pressure method is based on the law of continuity and Bernoulli's energy equation. A primary differential pressure device is installed at the measuring point to measure the flow. The primary element restricts the pipe.

According to the law of continuity, the mass flow of a moving fluid (gas, steam or liquid) in a pipeline is the same at all points. If the cross-section is reduced at one point, the flow velocity must increase at this point. Thus, the restriction causes an overpressure directly in front of the primary element and a drop in pressure behind the primary element. This pressure drop is greatly influenced by the degree of restriction. This degree is usually measured in relation of the diameters of the restriction to the diameter of the pipe, the diameter ratio β:

$$\beta = \frac{d}{D}$$

© Siemens 2020

Function (continued)

The difference between overpressure before the primary element and lower pressure after the primary element is called differential pressure (Δp, "delta p"). According to Bernoulli's energy equation, the square-root of the differential pressure is proportional to the flow rate:

$q \sim \sqrt{\Delta p}$

The created differential pressure is partly recovered with sufficient distance to the primary element but a permanent pressure drop, $\Delta\omega$, remains.

The exact flow equation of ISO 5167 additionally considers the properties of the primary device, the pipe, and the fluid:

$q = f\,(C, \Delta p, \rho, \varepsilon, \beta)$

Where:

- q: mass flow
- Δp: differential pressure
- C: "coefficient of discharge"
- ρ: density of fluid before the point of measurement
- ε: expansion number
- β: diameter ratio

The C-factor is determined during design of the differential pressure flow meter. For certain types of flow meters it is a constant (e.g. Venturi flow meters), for others it is slightly non-linear and dependent on flow rate (orifice flow meters).

The expansion number considers the change in fluid properties due to the differential pressure itself.

All factors will be considered during the design of the differential pressure flow meter.

For flow measurement applications where all quantities (density, pressure, temperature, etc.) can – with sufficient accuracy – be considered constant, it can be reduced to the basic relation given above:

$q \sim \sqrt{\Delta p}$

Differential pressure flow measurement in practice

A differential pressure flow measurement usually consists of at least 3 components:

- primary element (orifice, pitot tube, etc.)
- manifold (plus primary shut-off valve for remote installations)
- differential pressure transmitter

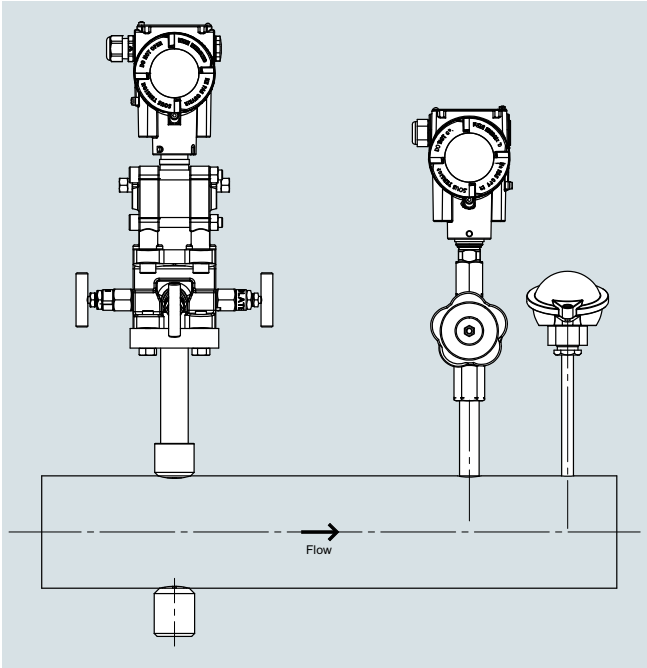

The picture above shows all these components installed together in a "compact" arrangement (manifold and differential pressure transmitter sitting on top of the primary element).

Depending on the process the application might require additional components such as:

- absolute pressure measurement
- temperature measurement

which are also shown above. If absolute pressure and/or temperature are not constant, these quantities have to be measured as well to calculate the density changes caused by the change of these process conditions. This process is called "compensation" meaning re-calculation of actual fluid density based on actual process conditions as explained above.

© Siemens 2020

Characteristic curves

Based on the relations described above differential pressure measurement systems generally show a square-root relationship between differential pressure and flow. Therefore, a square-root transmitter is required to create a linear flow characteristic. If no square-root characteristic is selected, the transmitter will output a signal proportional to differential pressure.

The conversion from differential pressure to flow has to be done in a subsequent system (flow computer, DCS, etc.). This is required if additional measurements such as absolute pressure and/or temperature are connected to such a system to correct for changes in operational density (so called “compensation”).

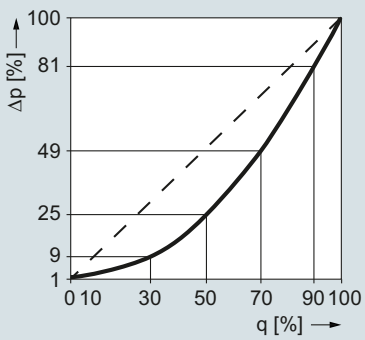

q	0	1	3	5	8	10	15	20	30	40	50	60	70	80	90	100 %
Δp	0	0,01	0,09	0,25	0,64	1	2,25	4	9	16	25	36	49	64	81	100 %

Setting range for application point of square-rooted characteristic for SITRANS P differential pressure transmitter

Relationship between flow q and differential pressure Δp

© Siemens 2020

Overview

Primary differential pressure devices are standardized mechanical flow sensors, often also referred to as differential pressure transducers. The primary differential pressure devices are calculated and manufactured according to DIN EN ISO 5167.

Through constriction of the line diameter in the pressure device, the flow rate creates a differential pressure that is converted with the help of a differential pressure transmitter into a proportional current signal or flow value. The assignment of differential pressure to flow is created by a calculation of the primary differential pressure device.

Primary differential pressure devices are suitable for single-phase media such as gas, vapor and liquids without solid components.

Benefits

- Suitable for universal use across the globe and widely accepted in all industries
- Very robust and can be used in a wide range of nominal sizes
- Suitable for high temperature and pressure ranges
- Low uncertainty of measurement
- No wet calibration required as they use an internationally standardized flow rate measurement procedure
- Differential pressure transmitter can be used over a long distance from the measuring location
- Differential pressure method is well known and has a large installed base
- SITRANS P differential pressure transmitter is easy to parameterize again if process data change. They are adapted by recalculating and assigning new parameters to the transmitter or, in case of an orifice plate with annular chamber, by using a new orifice disk.

Application

- Technical Gases
- Compressed Air
- Fresh and Combustion Air
- Steam/Heat Quantities
- Heat Transfer Fluids
- Water

Design

Basics: Orifices for flow measurement

Orifice plates are usually differentiated by their type of installation, type of differential pressure tapping and the shape of the orifice.

The characteristic differential pressure is created by the orifice bore which is the defined circular opening. It is usually of square edged concentric type according to ISO 5167-2 positioned in the middle of the pipe.

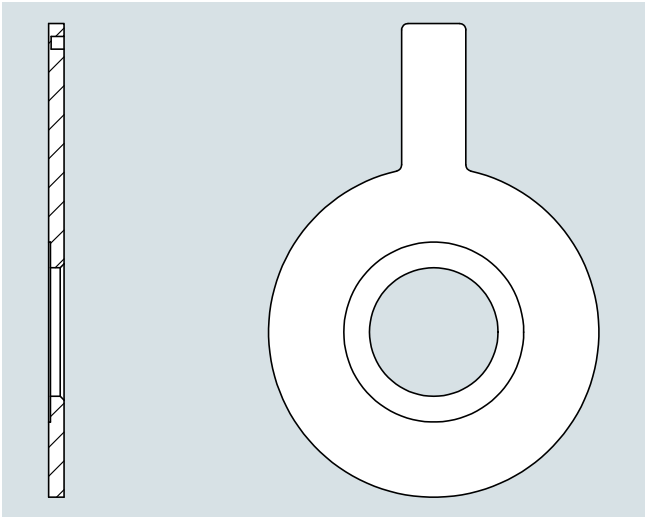

The main features are a sharp edge, a cylindrical bore of a certain length and a conical bevel tapering to the rear. Alternatively, the relevant standards provide for deviating designs, which are used for applications with highly viscous (e.g. quarter-circle nozzles) or contaminated media (e.g. segment orifices).

The standard design is permitted by the standard for an inner diameter of the pipe between 50 mm and 1000 mm. For pipes with smaller inside diameters, standards such as ISO 15377-TR or ASME MFC-14M which go beyond these standards must be taken into account. Orifice plates for pipes with small inside diameters are usually designed as meter tubes.

In order to reduce the uncertainties of these meter tubes, the devices can be calibrated on a flow test bench if required on request.

© Siemens 2020

Design (continued)

Types of differential pressure tappings

The differential pressure can be tapped in different ways:

Corner tapping

Directly in front of and behind the orifice plate an opening is placed in the corner of a carrier ring to measure upstream and downstream pressure. Both pressure signals are routed through these openings to the outside.

Corner tapping with annular chamber

The orifice plated is held by an annular chamber. Upstream and downstream pressure are measured through an annular gap opening between carrier ring and orifice plate. Both pressure signals are averaged over the entire circumference and routed outside.

Flange tapping

The orifice plate is held between two so-called orifice flanges. Upstream and downstream pressure signals are measured through flange taps which are drilled into the flanges.

Tapping with distance D, D/2

The orifice plate is held between regular flanges. Upstream and downstream pressure signals are measured through taps in the pipe with distance of D (upstream) and D/2 (downstream) to the orifice plate.

Designs

- Orifice plate with pressure tappings (7ME171)
- Orifice plate with annular chamber (7ME172)
- Orifice meter run (7ME173)
- Orifice plate (7ME174)
- Orifice plate with orifice flange (7ME175)

Mounting arrangements

For more information on installation position and piping, please see the Operating Instructions "SITRANS FPS200" on SIOS.

Integration

The orifice plate is installed between two flanges in the pipeline. Using condensation pots (for steam) and initial shut-off valves, the differential pressure of the high-pressure side and low-pressure side is directed through differential pressure lines to a manifold and to the differential pressure transmitter. For fluids with pressure and temperature fluctuations it makes sense to take an additional measurement of the pressure and temperature in order to correct the flow signal of the transmitter in a subsequent correction computer.

Selection of mounting point

The flow measuring regulations DIN EN ISO 5167 not only consider the design of primary differential pressure devices, but also assume that their installation is in accordance with the standard so that the specified tolerances can be retained. The required inlet and outlet pipe sections according to ISO 5167 can be found in the calculation protocol of the respective orifice plate. Configuration of the pipeline should allow for standardized installation (required inlet and outlet pipe section). Particular attention must be paid to ensure that the primary device can be fitted in a sufficiently long straight section of pipe. Bends, valves and similar should be fitted sufficiently far upstream of the primary device to prevent them having a detrimental effect. Primary devices with a large diameter ratio are particularly sensitive to interferences.

Design of measuring point

The design of the measuring point depends on the medium and on the spatial conditions. The designs for gas and water only differ with regard to the position of the tapping sockets (see section "Tapping sockets"); condensation pots are provided for steam applications.

Orifice meter runs

On lines with small nominal sizes (DN 10 to DN 50) the measurements are influenced by the wall roughness and diameter tolerances of the pipes, more than measurements with larger nominal sizes. These influences are counteracted by using orifice meter runs with fitted inlet and outlet pipe sections made of precision pipes. For exact measurements with orifice meter runs, the flow coefficient C can be determined by means of calibration.

© Siemens 2020

Technical specifications

General design	
Working principle	Differential pressure orifice meter (other ISO 5167 primary elements on request)
Media	• Steam (saturated, superheated) • Gas (dry, up to 100% water saturated) • Liquids (water, non-conductive liquids, oil, etc.)
Transmitter installation	• Compact mount with differential pressure transmitter (acc. to IEC 61518) • Remote mounted differential pressure transmitter
Bidirectional flow	On request
Design	According to ISO 5167-2 (2003); for orifice plates smaller than 50 mm inner diameter according to ISO/TR 15377 or ASME MFC-14M:2003
Accuracy	
Uncertainty at design flow (of Sensor Coefficient of Discharge)	Typically in the range of 0.5 ... 1.2% (depends on application and final design)
Measurement range	Typically between up to 1:5 ... 1:10 (real measurement range depends on transmitter performance and non-linearity of coefficient of discharge)
Operating conditions	
Pressure	Max. PN 100 or Class 600 (higher pressure ratings on request)
Temperature	According to EN 1092-1 or ASME B16.5 (exact maximum temperature depends on sensor design)
Pressure loss	30 ... 80% of differential pressure
Installation conditions	
Straight inlet diameter	Will be calculated by sizing tool (depends on β-coefficient, typically in the range of 16 ... 44 × inner diameter behind 90° elbow, can be reduced with 0.5% added uncertainty)
Straight outlet diameter	Will be calculated by sizing tool (depends on β-coefficient, typically in the range of 6 ... 8 × inner diameter, can be reduced with 0.5% added uncertainty) Note: For detailed calculation of recommended installation pipe length please refer to sizing tool or manual

Design	
Material orifice plate	Standard: • Stainless steel 1.4404/AISI 316L • Carbon steel (other materials on request)
Material orifice flanges / orifice holder	• Stainless steel 1.4404/AISI 316L • Carbon steel (other materials on request)
Pipe diameter	• DIN: DN 10 ... DN 600 • ASME: 3/8" ... 24" (other sizes on request)
Process connection	Orifice meter runs: Flanges EN 1092-1 B1 or ASME B16.5 RF All other designs: Suitable for installation between flanges EN 1092-1 B1 or ASME B16.5 RF (other process connections on request)
Length	Orifice with carrier ring and pressure tappings: 40 mm (65 mm for compact steam applications) Orifice plate with annular chamber: 65 mm Orifice meter run: depends on pipe diameter (see below) Single piece orifice for orifice flanges (with or without orifice flanges): depends on pipe diameter (see below)
Approvals	
• Hazardous area	(see differential pressure transmitter)
• Enclosure rating	(see differential pressure transmitter)
• Operational safety	(see differential pressure transmitter)

Options

Further versions that are available on request:

- Other types of primary differential pressure device: nozzles, venturi nozzles, classic venturi tubes etc.
- Other nominal sizes and nominal pressures to EN, ASME and other standards
- Other lengths, special lengths
- Other materials
- Sealing face with recess or groove
- Flushing rings
- Other tapping sockets, multiple tappings
- Material acceptance test certificates or cold water pressure tests

More information

For more information please see the Installation Instructions and the Instruction Manuals SITRANS P on SIOS.

© Siemens 2020

Application

SITRANS FP230 compact design

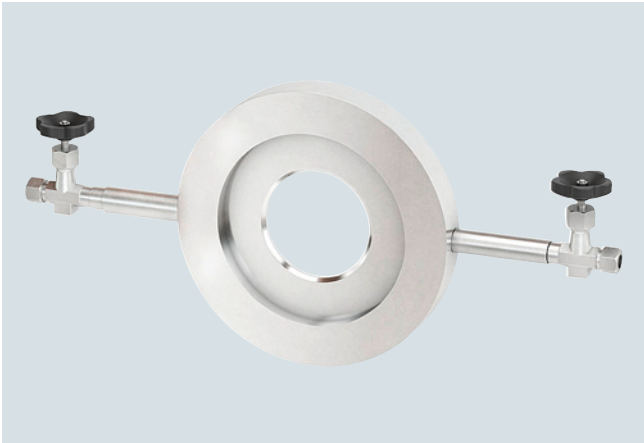

SITRANS FPS200 remote design

Compact orifice plate with integrated pressure tappings in carbon or stainless steel for flow measurement of gas, steam and liquid.

© Siemens 2020

Orifice plate with pressure tappings

Design

Orifice plates with integral tappings are manufactured from a single body and are therefore particularly inexpensive. The pressure tapping takes place at two points and is integrated into the carrier ring. Differential pressure connection can be compact and remote. The instruments are easy to handle and offer good accuracy with reasonable inlet and outlet runs. They are installed between regular flanges.

Nominal size
- EN: DN 50 ... 500
- ASME: 2 ... 20 inch

Nominal pressure
- EN: PN 6 ... 100
- ASME: class 150 ... 600

Connection length

Differential pressure tapping
- Corner tapping: Measurement of differential pressure at 2 points in the corner of the carrier ring

Sealing face
- According to EN 1092-1: flat (for flanges form B1 and B2)
- According to ASME B16.5: flat (for flanges RF and SF)

Overall length
- 40 mm (65 mm for compact steam applications)

Material
- Orifice: Carbon steel / orifice edge: 316L/1.4404
- Orifice: 316L/1.4404 / orifice edge: 316L/1.4404

Compact mount for gas and liquids

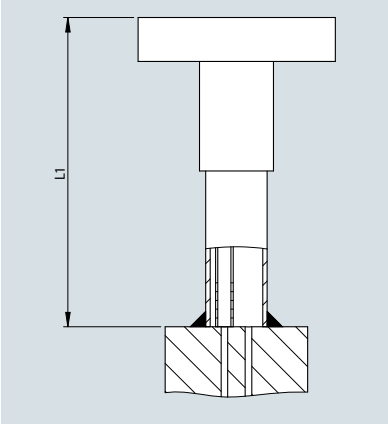

- L1 = 130 mm
- Max. isolation = 110 mm

Compact mount for steam

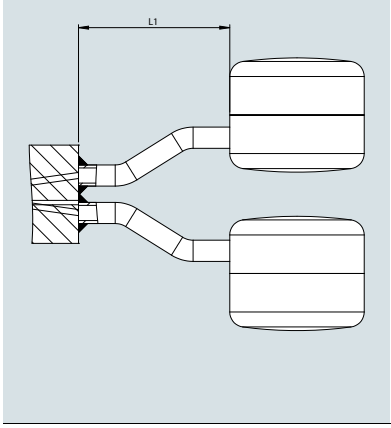

- L1 = 150 mm
- Max. isolation = 110 mm

Remote mount for gas and liquids

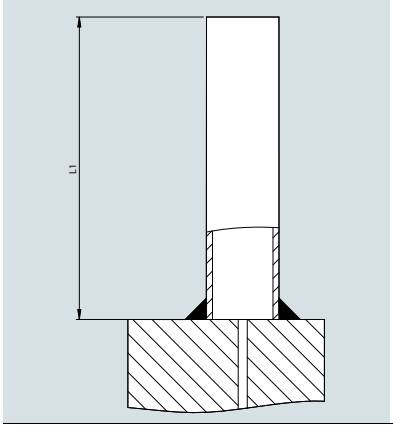

- L1 = 100 mm
- Max. isolation = 80 mm

Remote mount for steam

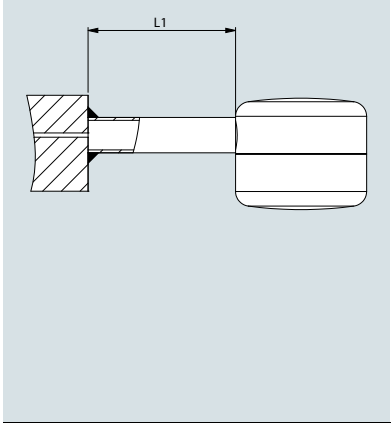

- L1 = 150 mm
- Max. isolation = 140 mm

© Siemens 2020

Design (continued)

Tapping sockets

Gases and liquids

Remote design

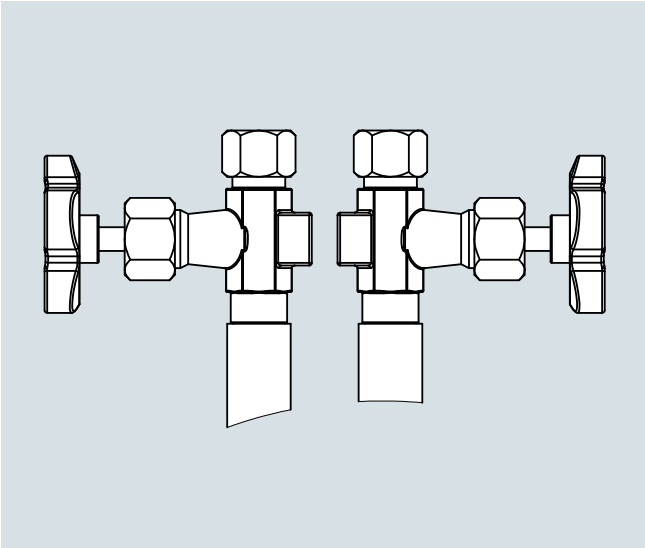

For single body orifice plates in remote design, the angle α between the pressure tap depends on the pressure rating and the nominal size of the flanges.

Compact design

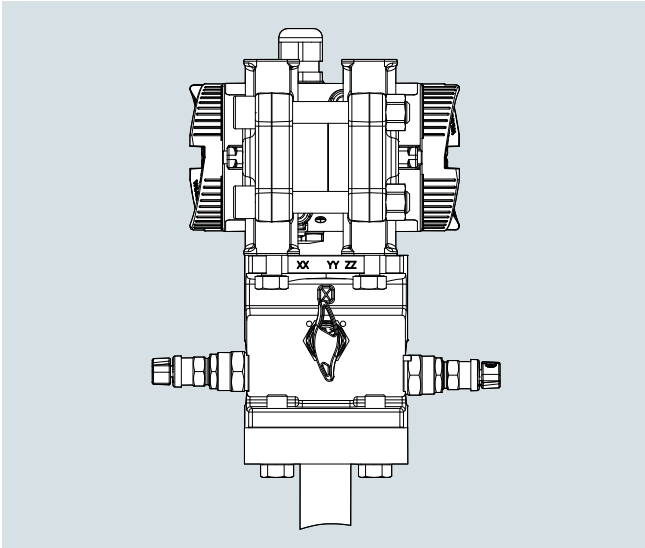

For single body orifice plates in compact design, a so-called flange plate is used. The manifold and the differential pressure transmitter are mounted on this flange plate.

Tap position/angle in horizontal pipe:

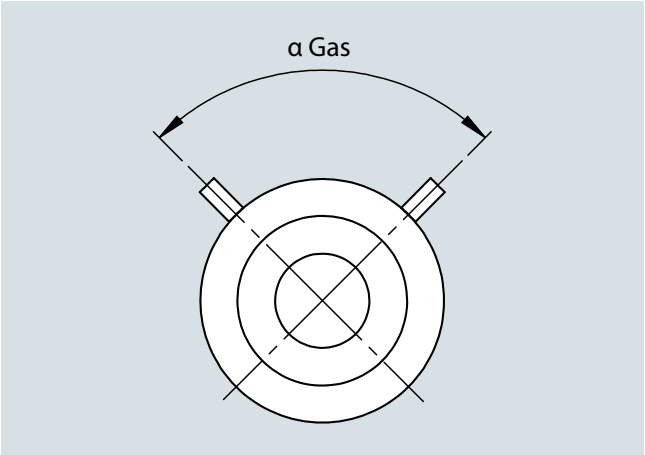

Tap position/angle in horizontal pipe (gas)

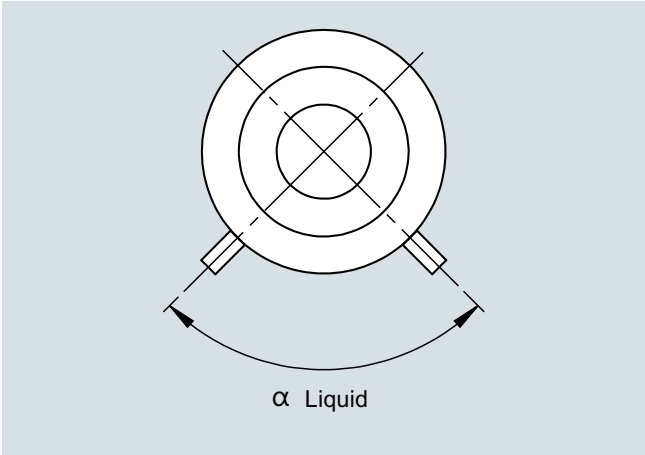

Tap position/angle in horizontal pipe (liquid)

© Siemens 2020

Design (continued)

Remote design for gases and liquids for DIN flange

	DIN flange						
Nominal size	**PN 6**	**PN 10**	**PN 16**	**PN 25**	**PN 40**	**PN 64**	**PN 100**
DN 50	135	135	135	135	135	135	135
DN 65	135	135	135*)	90	90	90	90
DN 80	135	90	90	90	90	90	90
DN 100	135	90	90	90	90	90	90
DN 125	90	90	90	90	90	90	90
DN 150	90	90	90	90	90	90	60
DN 175	90	90	90	60	60	60	60
DN 200	90	90	60	60	60	60	60
DN 250	60	60	60	60	60	60	60
DN 300	60	60	60	45	45	45	45
DN 350	60	45	45	45	45	45	45
DN 400	45	45	45	45	45	45	45
DN 450	45	36	36	36	-	-	-
DN 500	36	36	36	36	36	36	36

Remote design for gases and liquids for ANSI flange

	ANSI flange		
Nominal size	**Class 150**	**Class 300**	**Class 600**
2"	135	90	90
2,5"	135	90	90
3"	135	90	90
4"	90	90	90
5"	90	90	90
6"	90	60	60
8"	90	60	60
10"	60	45	45
12"	60	45	36
14"	60	36	36
16"	45	36	36
18"	45	30	36
20"	36	30	30

*) Fitting for DN 65 PN 16 flange with 4 holes. If design for flange with 8 holes is required, please add a comment to the corresponding project within the sizing tool.

© Siemens 2020

Design (continued)

Wet gases

Remote design

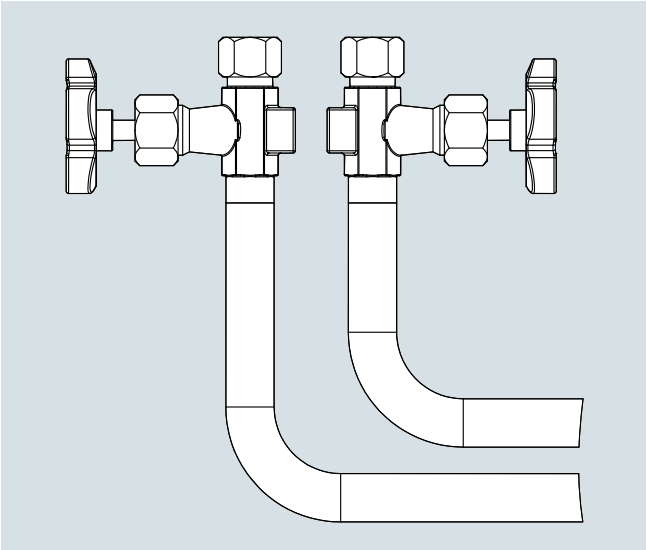

For single body orifice plates in remote design for wet gases, nozzles bent at right angles with welded-on valves are used. This design is only necessary for vertical pipes. For horizontal pipes, the design for gases and liquids can be selected because the nozzles point up as listed in the table above.

Compact design

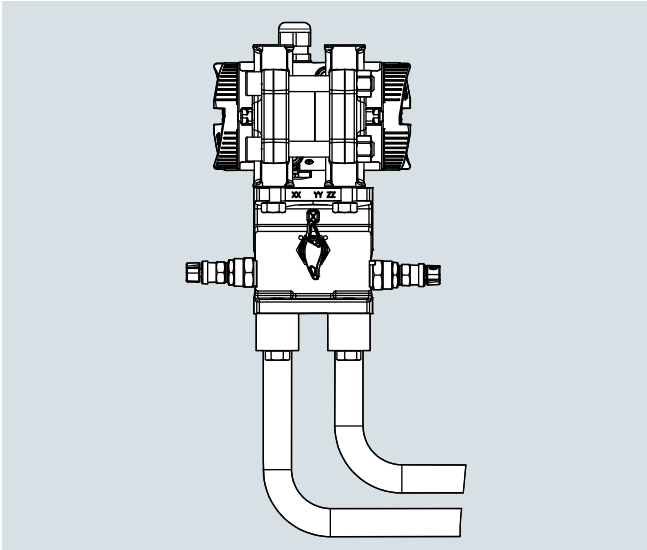

For single body orifice plates in compact design for wet gases, nozzles bent at right angles with oval flanges are used. The manifold and the differential pressure transmitter are mounted on these oval flanges. This design is only necessary for vertical pipes. For horizontal pipes, the design for gases and liquids can be selected because the flange plate with manifold and transmitter always points up.

Steam

Remote design

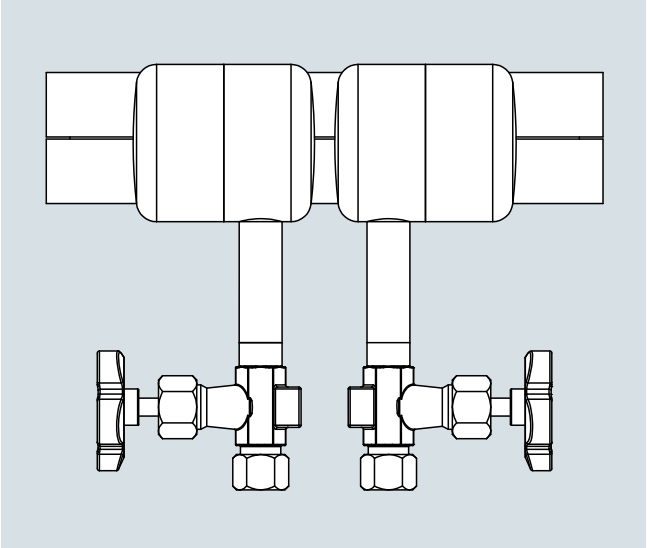

For single body orifice plates in remote design for steam, the condensate vessels with shut-off valves are welded at an angle of 180°.

Compact design

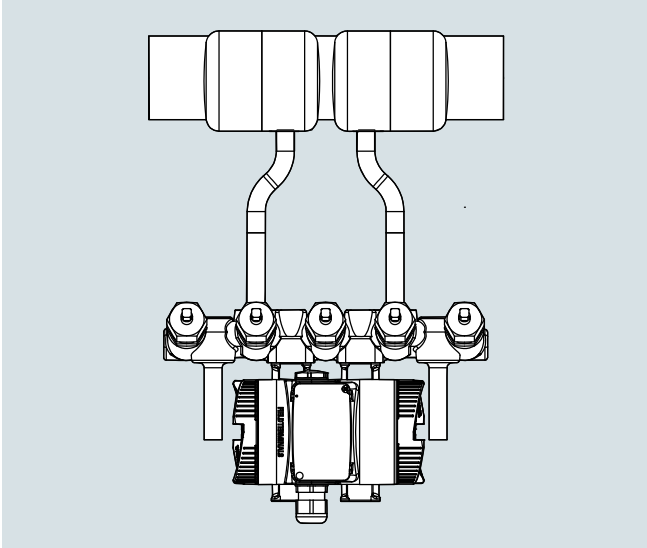

For single body orifice plates in compact design for steam, the condensate vessels and the manifold are welded-on one side. The orifice has a width of 65 mm in this case (deviating from the standard).

© Siemens 2020

Selection and ordering data

	Article No.											
SITRANS FP230/FPS200 orifice plate with pressure tappings ↗	**7ME171**	■	-	■	■	■	**0**	-	■	■	■	■
↗ Click on the Article No. for the online configuration in the PIA Life Cycle Portal.												
Communication												
HART (4 ... 20 mA)		**0**										
Without transmitter		**8**										
Nominal size												
DN 50 (2“)				**1**	**D**							
DN 65 (2½“)				**1**	**E**							
DN 80 (3“)				**1**	**F**							
DN 100 (4“)				**2**	**G**							
DN 125 (5“)				**2**	**H**							
DN 150 (6“)				**2**	**J**							
DN 200 (8“)				**2**	**K**							
DN 250 (10“)				**2**	**L**							
DN 300 (12“)				**2**	**M**							
DN 350 (14“)				**2**	**N**							
DN 400 (16“)				**2**	**P**							
DN 450 (18“)				**2**	**Q**							
DN 500 (20“)				**2**	**R**							
Nominal pressure												
Flange EN 1092-1 Form B1 PN 6						**A**						
Flange EN 1092-1 Form B1 PN 10						**B**						
Flange EN 1092-1 Form B1 PN 16						**C**						
Flange EN 1092-1 Form B1 PN 25						**D**						
Flange EN 1092-1 Form B1 PN 40						**E**						
Flange EN 1092-1 Form B1 PN 64						**F**						
Flange EN 1092-1 Form B1 PN 100						**G**						
Flange ASME B16.5 Class 150						**Q**						
Flange ASME B16.5 Class 300						**R**						
Flange ASME B16.5 Class 600						**S**						
Wetted parts material												
Orifice: Carbon steel / orifice edge: 316L/1.4404							**0**					
Orifice: 316L/1.4404 / orifice edge: 316L/1.4404							**1**					
System design												
Compact design for dry gases (horizontal and vertical pipes)									**0**			
Compact design for liquids									**1**			
Compact design for wet gases (only vertical pipes)									**2**			
Compact design for steam									**3**			
Remote design for dry gases									**4**			
Remote design for liquids									**5**			
Remote design for wet gases									**6**			
Remote design for steam									**7**			
Type of protection of pressure transmitter												
No Ex / without pressure tranmitter										**A**		
Intrinsic safety										**B**		
Explosion proof										**C**		
Intrinsic safety, Explosion proof										**D**		
Dust ignition proof zone 21/22 (DIP), increased safety zone 2										**L**		
Dust ignition proof zone 20/21/22 (DIP), increased safety zone 2										**M**		
Intrinsic safety, Explosion proof, Dust ignition proof zone 21/22 (DIP), increased safety zone 2										**S**		
Intrinsic safety, Explosion proof, Dust ignition proof zone 21/22 (DIP), increased safety zone 2, class division										**T**		
Electrical connections/cable entries of pressure transmitter												
Without pressure transmitter											**A**	
2 x M20 x 1.5											**F**	
2 x 1/2-14 NPT											**M**	
Local operation/display of pressure transmitter												
Without display (closed lid) / without pressure tranmitter												**0**
With display (closed lid)												**1**
With display (lid with glass window)												**2**

© Siemens 2020

Selection and ordering data

	Order code
Further designs*	
Please add "**-Z**" to Article No. and specify Order code(s) and plain text.	
Certificates of primary element incl. manifolds	
Inspection certificate of the primary element (EN 10204-3.1) - material of pressure-containing and wetted parts	**C52**
Factory certificate of the primary element (EN 10204-2.2) - wetted parts (MR 0175-2015)	**C54**
Dimensional record of the primary element	**C55**
Inspection certificate (DIN EN 571-1) - dye penetration test of weldings	**C56**
Hydrostatic pressure test of the primary element (EN 13480-5) of weldings	**C58**
Dimensional drawing 1:1 DWG of the primary element	**C59**
Maximum measuring span of pressure transmitter	
20 mbar (8.037 inH_2O)	**I01**
60 mbar (24.11 inH_2O)	**I02**
250 mbar (100.5 inH_2O)	**I03**
600 mbar (241.1 inH_2O)	**I04**
1600 mbar (643 inH_2O)	**I05**
Shut-off valves	
With mounted shut-off valves DN8 made of carbon steel, up to 300 °C with tube fitting 12 mm	**T50**
With mounted shut-off valves DN8 made of stainless steel, up to 300 °C with tube fitting 12 mm	**T51**
With mounted shut-off valves DN8 made of carbon steel, up to 300 °C and condensate vessel made of carbon steel with tube fitting 12 mm	**T56**
With mounted shut-off valves DN8 made of stainless steel, and condensate vessel made of stainless steel with tube fitting 12 mm	**T57**
Valve manifolds for mounting on primary element	
With mounted manifold (3-fold) made of stainless steel, PTFE sealings, cadmium-plated steel screws	**U40**
With mounted manifold (3-fold) made of stainless steel, PTFE sealings, stainless steel screws	**U41**
With mounted manifold (5-fold) made of stainless steel, PTFE sealings, cadmium-plated steel screws	**U42**
With mounted manifold (5-fold) made of stainless steel, PTFE sealings, stainless steel screws	**U43**
With mounted manifold (5-fold) made of carbon steel, up to 300 °C cadmium-plated steel screws and condensate vessel made of carbon steel	**U46**
With enclosed manifold (3-fold) made of stainless steel, PTFE sealings, cadmium-plated steel screws with tube fitting 12 mm	**U50**
With enclosed manifold (3-fold) made of stainless steel, PTFE sealings, stainless steel screws with tube fitting 12 mm	**U51**
With enclosed manifold (5-fold) made of stainless steel, PTFE sealings, cadmium-plated steel screws with tube fitting 12 mm	**U52**
With enclosed manifold (5-fold) made of stainless steel, PTFE sealings, stainless steel screws with tube fitting 12 mm	**U53**
With enclosed manifold (5-fold) made of carbon steel, up to 300 °C cadmium-plated steel screws with tube fitting 12 mm	**U56**
Application data	
ID number of the primary element according to sizing tool	**Y40**

* For further options, please refer to SITRANS P320.

Scope of delivery

- Orifice with pressure tapping in carrier ring
- Condensation pots for steam applications
- Shut-off valves for remote design (options T5x selected in PIA)
- Manifold for compact/remote design (options U4x, U5x selected in PIA)

© Siemens 2020

Dimensional drawings

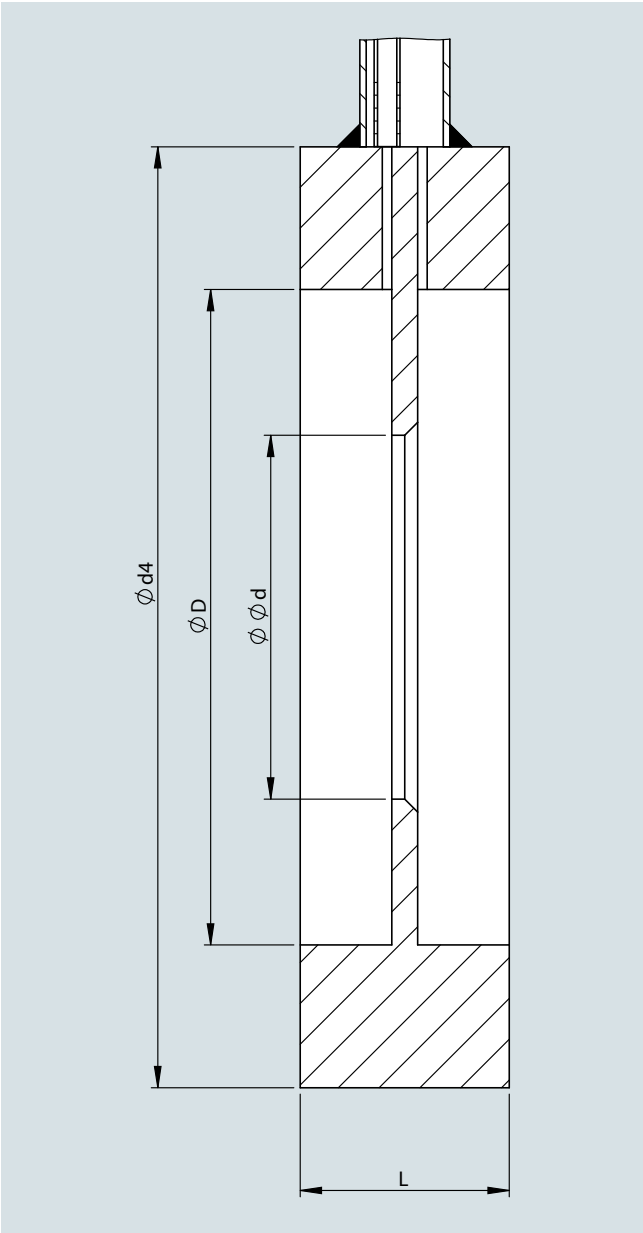

D: According to inner diameter of pipe (sizing tool)

d: According to sizing calculation

d4:

	Outer diameter d4 / Sealing face: flat						
Nominal size	**PN 6**	**PN 10**	**PN 16**	**PN 25**	**PN 40**	**PN 63**	**PN 100**
DN 50	96	107	107	107	107	113	119
DN 65	116	127	127	127	127	138	144
DN 80	132	142	142	142	142	148	154
DN 100	152	162	162	168	168	174	180
DN 125	182	192	192	194	194	210	217
DN 150	207	218	218	224	224	247	257
DN 200	262	273	273	284	290	309	324
DN 250	317	328	329	340	352	364	391
DN 300	373	378	384	400	417	424	458
DN 350	423	438	444	457	474	486	512
DN 400	473	489	495	514	546	543	-
DN 500	578	594	617	624	628	-	-

	Outer diameter d4 / Sealing face: flat		
Nominal size	**Class 150**	**Class 300**	**Class 600**
2"	105	111	111
2,5"	124	130	130
3"	137	149	149
4"	175	181	194
5"	197	216	241
6"	222	251	267
8"	279	308	321
10"	340	362	400
12"	410	422	457
14"	451	486	492
16"	514	540	565
20"	549	597	613

© Siemens 2020

Application

SITRANS FP230 compact design

SITRANS FPS200 remote design

Orifice plate with annular chamber pressure tapping in carbon or stainless steel for flow measurement of gas, steam and liquid.

Design

Annular chamber orifice plates consist of two rings pressed together, between which the orifice plate is clamped. The pressure is measured upstream and downstream through an annular chamber. The accuracy is comparable to that of the standard orifice plate.

Orifice plates with annular chamber tappings consist of a two-piece carrier ring with annular chamber and integral tappings and an inserted orifice plate. Pressure before and after the orifice is averaged through the annular chamber. Tapping connections are integrated into each part of the carrier ring. Differential pressure connection can be compact and remote. The instruments are easy to handle and offer good accuracy with reasonable inlet and outlet runs. They are installed between regular flanges. The orifice can be disassembled to replace the inserted orifice plate.

Nominal sizes

- EN: DN 50 ... 600
- ASME: 2 ... 24 inch

Nominal pressure

- EN: PN 6 ... 64 (for steam applications maximum of PN 16 is recommended)
- ASME: class 150 ... 600 (for steam applications maximum of class 150 is recommended)

Pressure tapping

- Annular chamber: Corner tapping through annular chamber

Connection length

- Suitable for gases and liquids for a maximum of approx. 80 mm pipe insulation
- Suitable for steam for a maximum of approx. 140 mm pipe insulation

Sealing face

- According to EN 1092-1: flat (for flanges form B1 and B2)
- According to ASME B16.5: flat (for flanges RF and SF)

Overall length

- 65 mm

Material

- Carrier ring: Carbon steel / orifice plate: 316L/1.4404
- Carrier ring: 316L/1.4404 / orifice plate: 316L/1.4404

Gaskets

- Gas and liquids: Klingersil C4400
- Steam: Graphite with stainless steel inlay

© Siemens 2020

Design (continued)

Tapping sockets

Gases and liquids

Remote design

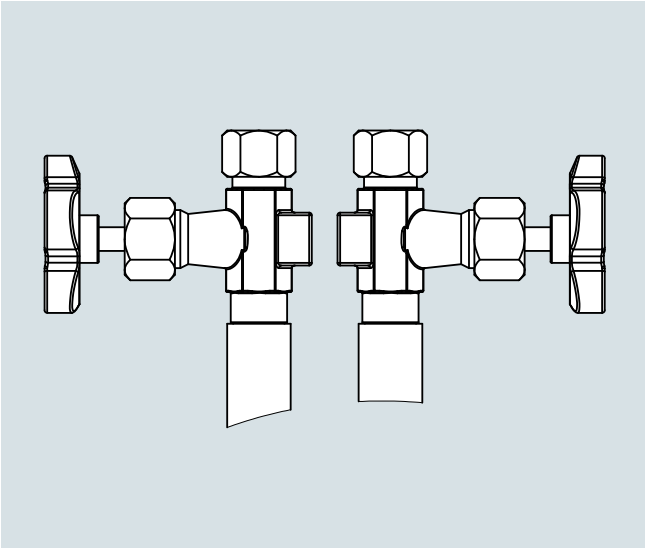

For annular chamber orifice plates in remote design, the angle α between the pressure tap depends on the pressure rating and the nominal size of the flanges.

Compact design

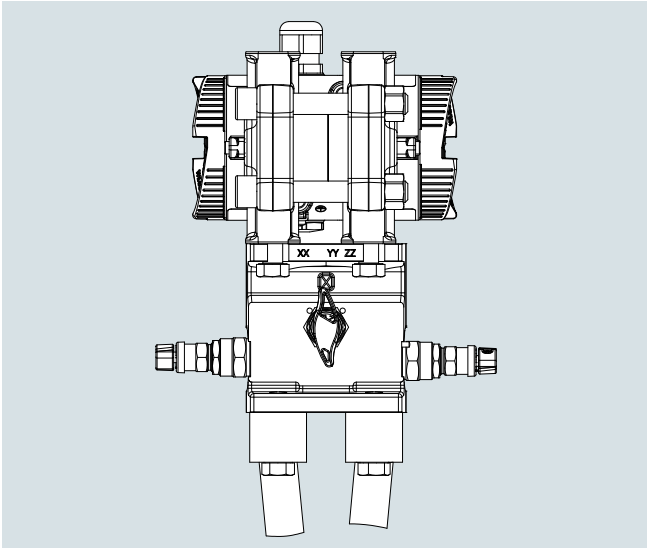

For annular chamber orifice plates in compact design, so-called oval flanges are used. The manifold and the differential pressure transmitter are mounted on these oval flanges.

Tap position/angle in horizontal pipe:

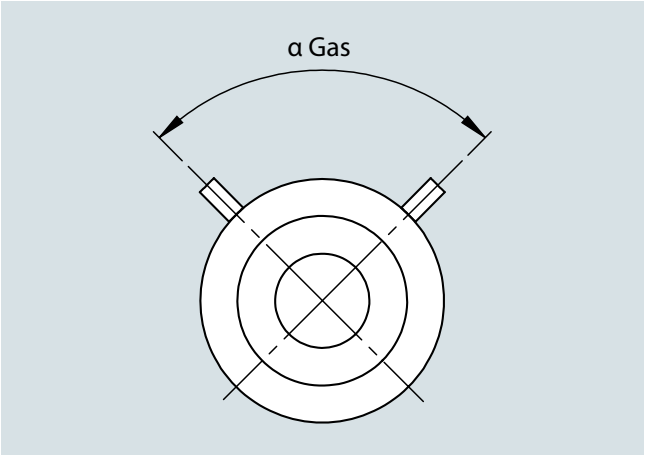

Tap position/angle in horizontal pipe (gas)

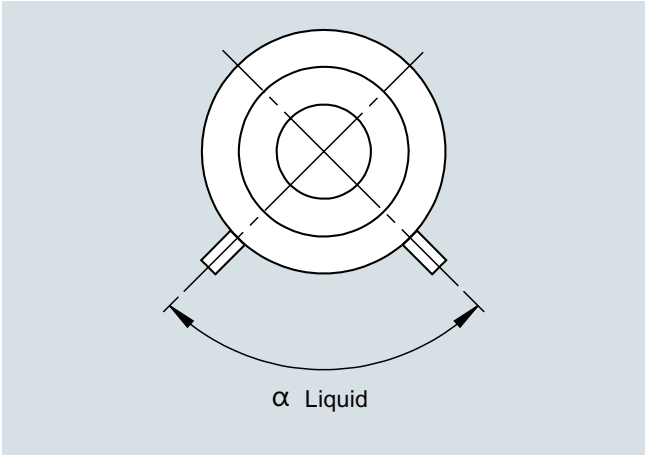

Tap position/angle in horizontal pipe (liquid)

© Siemens 2020

Design (continued)

	DIN flange					
Nominal size	**PN 6**	**PN 10**	**PN 16**	**PN 25**	**PN 40**	**PN 64**
DN 50	135	135	135	135	135	135
DN 65	135	135	135*)	90	90	90
DN 80	135	90	90	90	90	90
DN 100	135	90	90	90	90	90
DN 125	90	90	90	90	90	90
DN 150	90	90	90	90	90	90
DN 175	90	90	90	60	60	60
DN 200	90	90	60	60	60	60
DN 250	60	60	60	60	60	60
DN 300	60	60	60	45	45	45
DN 350	60	45	45	45	45	45
DN 400	45	45	45	45	45	45
DN 450	45	36	36	36	-	-
DN 500	36	36	36	36	36	36

	ANSI flange		
Nominal size	**Class 150**	**Class 300**	**Class 600**
2"	135	90	90
2.5"	135	90	90
3"	135	90	90
4"	90	90	90
5"	90	90	90
6"	90	60	60
8"	90	60	60
10"	60	45	45
12"	60	45	36
14"	60	36	36
16"	45	36	36
18"	45	30	36
20"	36	30	30
22"	36	30	30
24"	36	30	30

*) Fitting for DN 65 PN 16 flange with 4 holes. If design for flange with 8 holes is required, please add a comment to the corresponding project within the sizing tool.

© Siemens 2020

Design (continued)

Wet gases

Remote design

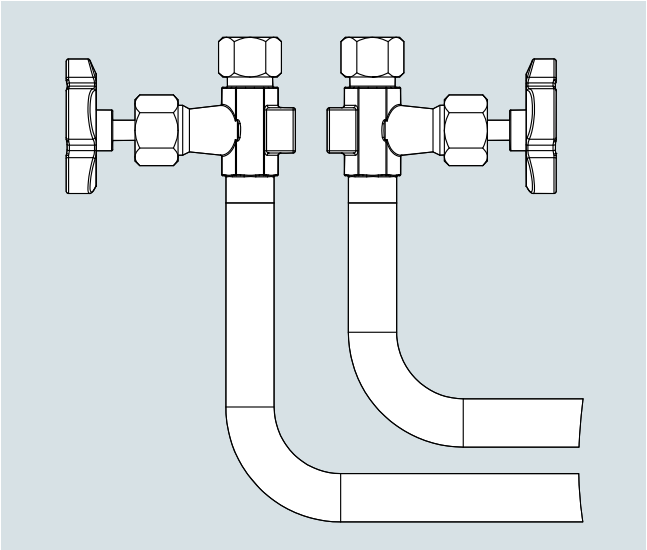

For annular chamber orifice plates in remote design for wet gases, nozzles bent at right angles with welded-on valves are used. This design is only necessary **for vertical pipes**. For horizontal pipes, the design for gases and liquids can be selected because the nozzles point up as listed in the table above.

Compact design

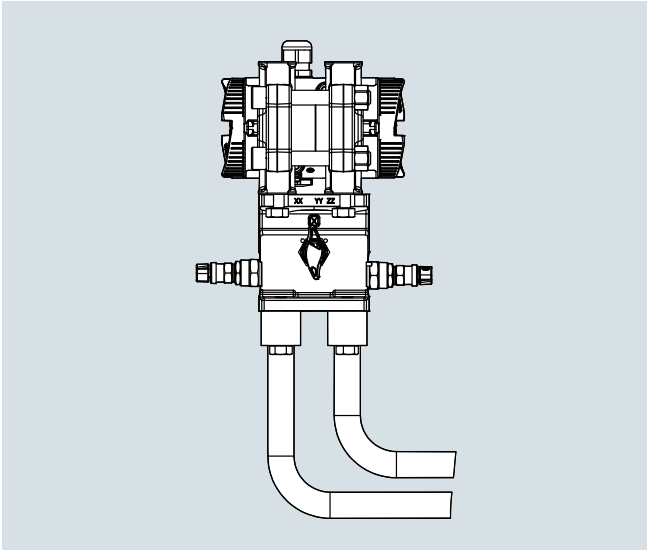

For annular chamber orifice plates in compact design for wet gases, nozzles bent at right angles with oval flanges are used. The manifold and the differential pressure transmitter are mounted on these oval flanges. This design is only necessary **for vertical pipes**. For horizontal pipes, the design for gases and liquids can be selected because the flange plate with manifold and transmitter always points up.

Steam

Remote design

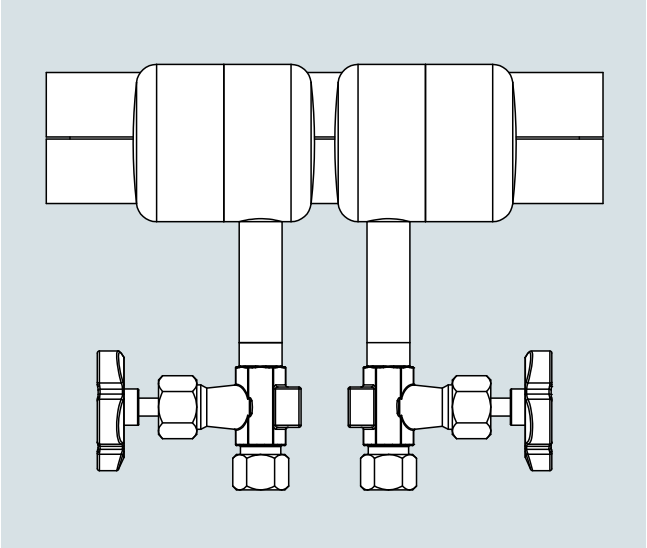

For annular chamber orifice plates in remote design for steam, the condensate vessels with shut-off valves are mounted at an angle of 0°.

Compact design

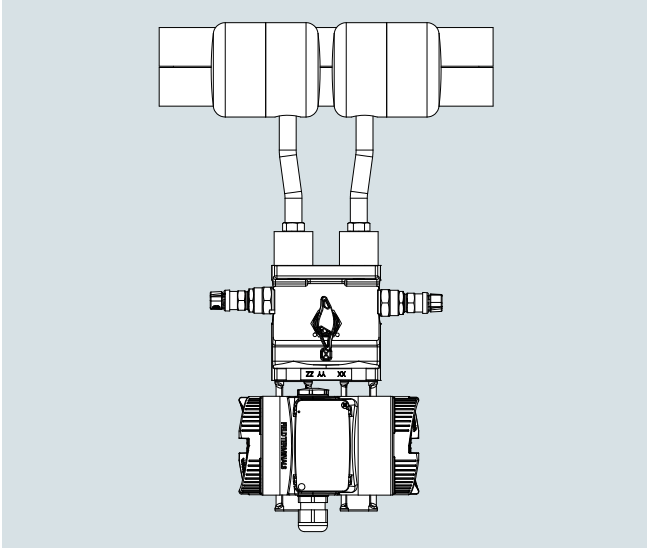

For annular chamber orifice plates in compact design for steam, the condensate vessels are mounted on one side. The manifold and the differential pressure transmitter are mounted to the condensate vessels using oval flanges. The condensate vessels are equipped with filling nozzles, which means a 3-way manifold can be used.

© Siemens 2020

Selection and ordering data

	Article No.											
SITRANS FP230/FPS200 orifice plate with annular chamber ↗	**7ME172**	■	-	■	■	■	**0**	-	■	■	■	■
↗ Click on the Article No. for the online configuration in the PIA Life Cycle Portal.												
Communication												
HART (4 ... 20 mA)		**0**										
Without transmitter		**8**										
Nominal size												
DN 50 (2“)				**1**	**D**							
DN 65 (2½“)				**1**	**E**							
DN 80 (3“)				**1**	**F**							
DN 100 (4“)				**2**	**G**							
DN 125 (5“)				**2**	**H**							
DN 150 (6“)				**2**	**J**							
DN 200 (8“)				**2**	**K**							
DN 250 (10“)				**2**	**L**							
DN 300 (12“)				**2**	**M**							
DN 350 (14“)				**2**	**N**							
DN 400 (16“)				**2**	**P**							
DN 450 (18“)				**2**	**Q**							
DN 500 (20“)				**2**	**R**							
DN 600 (24“)				**2**	**S**							
Nominal pressure												
Flange EN 1092-1 Form B1 PN 6						**A**						
Flange EN 1092-1 Form B1 PN 10						**B**						
Flange EN 1092-1 Form B1 PN 16						**C**						
Flange EN 1092-1 Form B1 PN 25						**D**						
Flange EN 1092-1 Form B1 PN 40						**E**						
Flange EN 1092-1 Form B1 PN 64						**F**						
Flange ASME B16.5 Class 150						**Q**						
Flange ASME B16.5 Class 300						**R**						
Flange ASME B16.5 Class 600						**S**						
Wetted part materials												
Carrier ring: Carbon steel / orifice plate: 316L/1.4404							**2**					
Carrier ring: 316L/1.4404 / orifice plate: 316L/1.4404							**3**					
System design												
Compact design for dry gases (horizontal and vertical pipes)									**0**			
Compact design for liquids									**1**			
Compact design for wet gases (only vertical pipes)									**2**			
Compact design for steam									**3**			
Remote design for dry gases									**4**			
Remote design for liquids									**5**			
Remote design for wet gases									**6**			
Remote design for steam									**7**			
Type of protection of pressure transmitter												
No Ex / without pressure tranmitter										**A**		
Intrinsic safety										**B**		
Explosion proof										**C**		
Intrinsic safety, Explosion proof										**D**		
Dust ignition proof zone 21/22 (DIP), increased safety zone 2										**L**		
Dust ignition proof zone 20/21/22 (DIP), increased safety zone 2										**M**		
Intrinsic safety, Explosion proof, Dust ignition proof zone 21/22 (DIP), increased safety zone 2										**S**		
Intrinsic safety, Explosion proof, Dust ignition proof zone 21/22 (DIP), increased safety zone 2, class division										**T**		
Electrical connections/cable entries of pressure transmitter												
Without pressure transmitter											**A**	
2 x M20 x 1.5											**F**	
2 x 1/2-14 NPT											**M**	
Local operation/display of pressure transmitter												
Without display (closed lid) / without pressure tranmitter												**0**
With display (closed lid)												**1**
With display (lid with glass window)												**2**

© Siemens 2020

Selection and ordering data

	Order code
*Further designs**	
Please add "**-Z**" to Article No. and specify Order code(s) and plain text.	
Certificates of primary element incl. manifolds	
Inspection certificate of the primary element (EN 10204-3.1) - material of pressure-containing and wetted parts	**C52**
Factory certificate of the primary element (EN 10204-2.2) - wetted parts (MR 0175-2015)	**C54**
Dimensional record of the primary element	**C55**
Inspection certificate (DIN EN 571-1) - dye penetration test of weldings	**C56**
Hydrostatic pressure test of the primary element (EN 13480-5) of weldings	**C58**
Dimensional drawing 1:1 DWG of the primary element	**C59**
Maximum measuring span of pressure transmitter	
20 mbar (8.037 inH_2O)	**I01**
60 mbar (24.11 inH_2O)	**I02**
250 mbar (100.5 inH_2O)	**I03**
600 mbar (241.1 inH_2O)	**I04**
1600 mbar (643 inH_2O)	**I05**
Shut-off valves	
With mounted shut-off valves DN8 made of carbon steel, up to 300 °C with tube fitting 12 mm	**T50**
With mounted shut-off valves DN8 made of stainless steel, up to 300 °C with tube fitting 12 mm	**T51**
With mounted shut-off valves DN8 made of carbon steel, up to 300 °C and condensate vessel made of carbon steel with tube fitting 12 mm	**T56**
With mounted shut-off valves DN8 made of stainless steel, and condensate vessel made of stainless steel with tube fitting 12 mm	**T57**
Valve manifolds for mounting on primary element	
With mounted manifold (3-fold) made of stainless steel, PTFE sealings, cadmium-plated steel screws	**U40**
With mounted manifold (3-fold) made of stainless steel, PTFE sealings, stainless steel screws	**U41**
With mounted manifold (5-fold) made of stainless steel, PTFE sealings, cadmium-plated steel screws	**U42**
With mounted manifold (5-fold) made of stainless steel, PTFE sealings, stainless steel screws	**U43**
With mounted manifold (5-fold) made of carbon steel, up to 300 °C cadmium-plated steel screws and condensate vessel made of carbon steel	**U46**
With mounted manifold (3-fold) made of stainless steel, PTFE sealings, stainless steel screws and condensation vessels incl. filling union 1/2" NPT made of stainless steel	**U47**
With enclosed manifold (3-fold) made of stainless steel, PTFE sealings, cadmium-plated steel screws with tube fitting 12 mm	**U50**
With enclosed manifold (3-fold) made of stainless steel, PTFE sealings, stainless steel screws with tube fitting 12 mm	**U51**
With enclosed manifold (5-fold) made of stainless steel, PTFE sealings, cadmium-plated steel screws with tube fitting 12 mm	**U52**
With enclosed manifold (5-fold) made of stainless steel, PTFE sealings, stainless steel screws with tube fitting 12 mm	**U53**
With enclosed manifold (5-fold) made of carbon steel, up to 300 °C cadmium-plated steel screws with tube fitting 12 mm	**U56**
Application data	
ID number of the primary element according to sizing tool	**Y40**

* For further options, please refer to SITRANS P320.

Scope of delivery

- Annular chamber consisting of two pieces, each with integrated pressure tapping
- Orifice plate mounted in annular chamber
- Gasket for annular chamber
- Condensation pots for steam applications
- Shut-off valves for remote design (options T5x selected in PIA)
- Manifold for compact/remote design (options U4x, U5x selected in PIA)

© Siemens 2020

Dimensional drawings

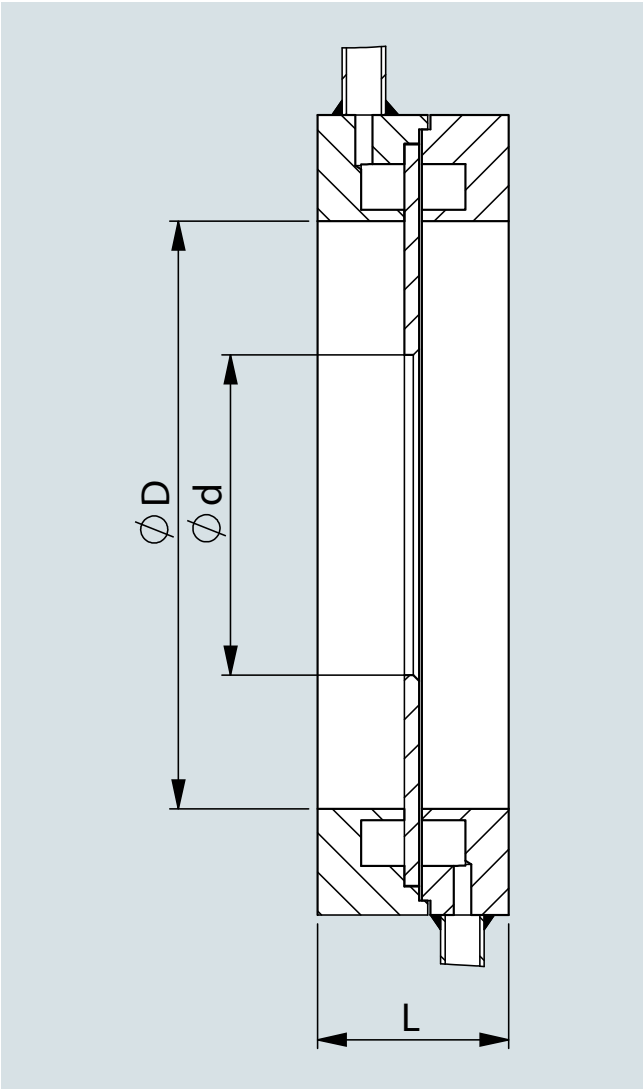

D: According to inner diameter of pipe (sizing tool)

d: According to sizing calculation

L: See overall length above

d4:

	Outer diameter d4 / Sealing face: flat						
Nominal size	**PN 6**	**PN 10**	**PN 16**	**PN 25**	**PN 40**	**PN 63**	**PN 100**
DN 50	96	107	107	107	107	113	119
DN 65	116	127	127	127	127	138	144
DN 80	132	142	142	142	142	148	154
DN 100	152	162	162	168	168	174	180
DN 125	182	192	192	194	194	210	217
DN 150	207	218	218	224	224	247	257
DN 200	262	273	273	284	290	309	324
DN 250	317	328	329	340	352	364	391
DN 300	373	378	384	400	417	424	458
DN 350	423	438	444	457	474	486	512
DN 400	473	489	495	514	546	543	-
DN 500	578	594	617	624	628	-	-

	Outer diameter d4 / Sealing face: flat		
Nominal size	**Class 150**	**Class 300**	**Class 600**
2"	105	111	111
2,5"	124	130	130
3"	137	149	149
4"	175	181	194
5"	197	216	241
6"	222	251	267
8"	279	308	321
10"	340	362	400
12"	410	422	457
14"	451	486	492
16"	514	540	565
20"	549	597	613

© Siemens 2020

Application

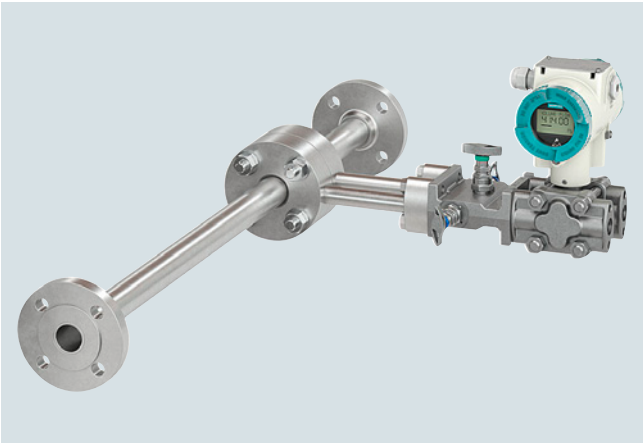

SITRANS FP230 compact design

SITRANS FPS200 remote design

Orifice meter run with flanges ends in carbon or stainless steel for flow measurement of gas, steam and liquid.

Design

Orifice meter runs for small diameter pipes come with partial straight inlet and outlet pipe runs with flanged ends. The pipes are connected to an annular chamber where the orifice plate is mounted. The annular chamber consists of a two-piece carrier ring with annular chamber and integral tappings and an inserted orifice plate.

Pressure before and after the orifice is averaged through the annular chamber. Tapping connections are integrated into each part of the carrier ring. Differential pressure connection can be compact and remote. The instruments are easy to install in the pipe system. Additional straight pipe length may be required before and after the orifice meter run. The orifice can be disassembled to replace the inserted orifice plate.

Nominal sizes
- EN: DN 10 ... 50
- ASME: 3/8 ... 2 inch

Nominal pressure
- EN: PN 6 ... 64
- ASME: class 150 ... 600

Pressure tapping
- Annular chamber: Corner tapping through annular chamber

Connection length
- Suitable for gases for a maximum of approx. 80 mm pipe insulation
- Suitable for steam for a maximum of approx. 140 mm pipe insulation

Sealing face
- According to EN 1092-1: flat (for flanges form B1 and B2)
- According to ASME B16.5: flat (for flanges RF and SF)

Overall length
- See table below

Material
- Pipe/Flanges: Carbon steel / orifice plate: 316L/1.4404
- Pipe/Flanges: 316L/1.4404 / orifice plate: 316L/1.4404

Gaskets
- Gas and liquids: Klingersil C4400
- Steam: Graphite with stainless steel inlay

© Siemens 2020

Design (continued)

Tapping sockets

Gases and liquids

Remote design

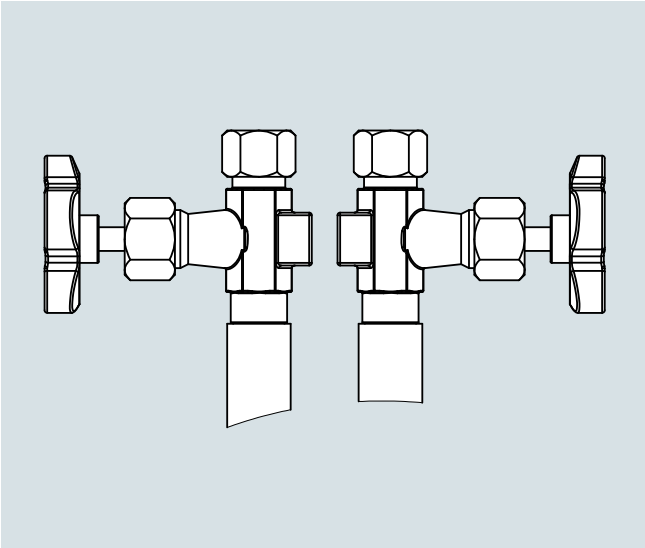

For metering pipes in remote design, the angle α between the pressure taps is 135°.

Compact design

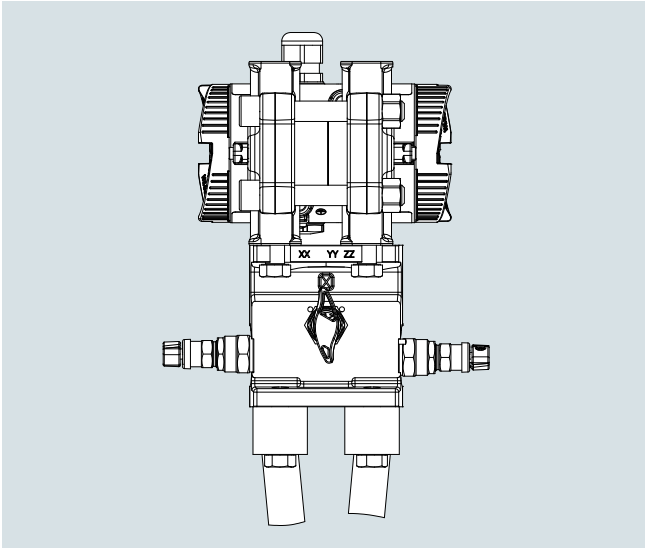

For metering pipes in compact design, so-called oval flanges are used. The manifold and the differential pressure transmitter are mounted on these oval flanges.

Tap position/angle in horizontal pipe:

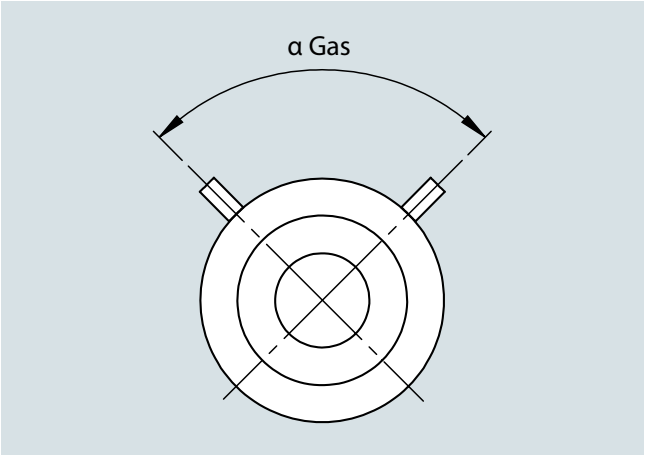

Tap position/angle in horizontal pipe (gas)

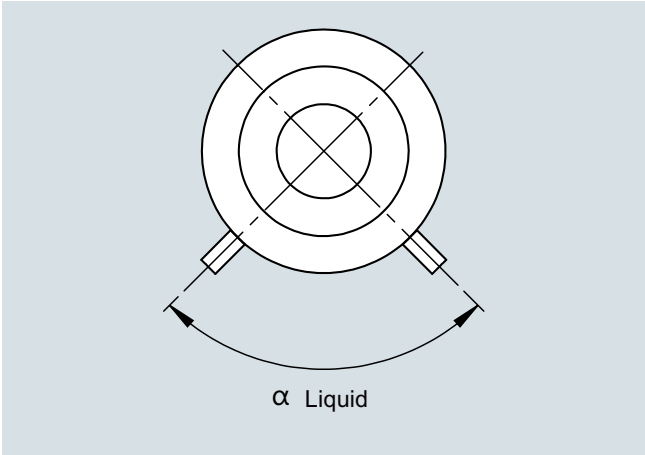

Tap position/angle in horizontal pipe (liquid)

© Siemens 2020

Design (continued)

Wet gases

Remote design

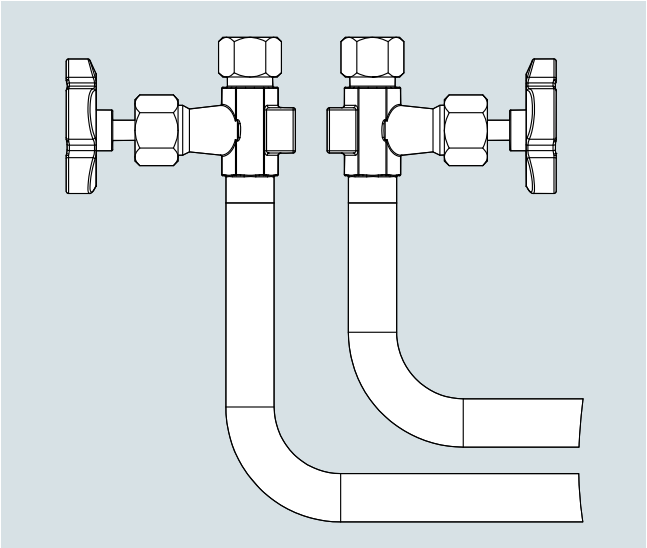

For metering pipes in remote design for wet gases, nozzles bent at right angles with welded-on valves are used. This design is only necessary for vertical pipes. For horizontal pipes, the design for gases and liquids can be selected because the nozzles point up as listed in the table above.

Compact design

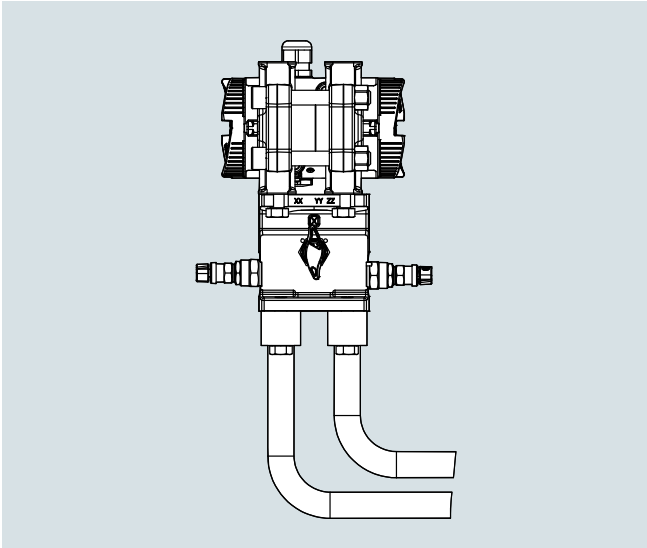

For metering pipes in compact design for wet gases, nozzles bent at right angles with oval flanges are used. The manifold and the differential pressure transmitter are mounted on these oval flanges. This design is only necessary for vertical pipes. For horizontal pipes, the design for gases and liquids can be selected because the flange plate with manifold and transmitter always points up.

Steam

Remote design

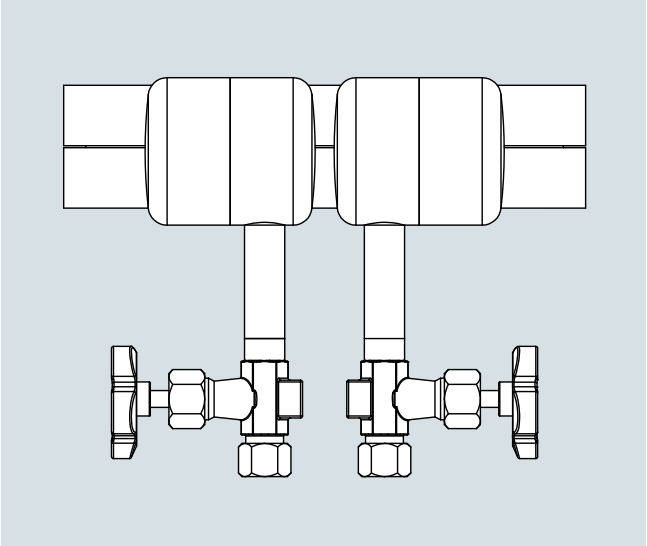

For metering pipes in remote design for steam, the condensate vessels with shut-off valves are mounted at an angle of 180°.

Compact design

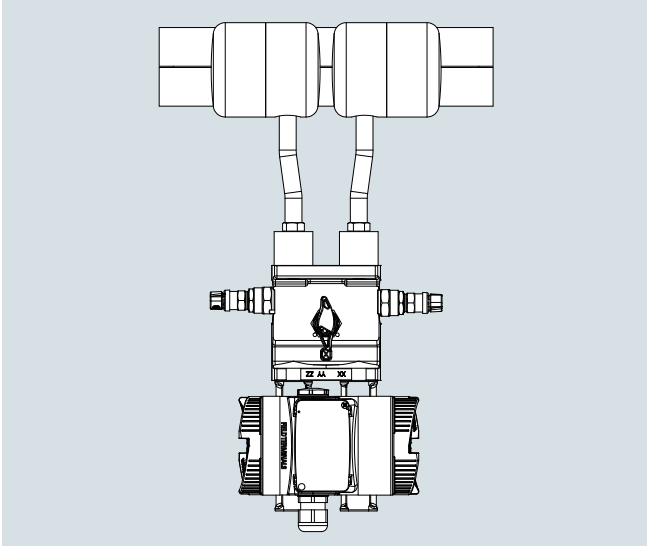

For metering pipes in compact design for steam, the condensate vessels are mounted on one side. The manifold and the differential pressure transmitter are mounted to the condensate vessels using oval flanges. The condensate vessels are equipped with filling nozzles, which means a 3-way manifold can be used.

© Siemens 2020

Selection and ordering data

	Article No.											
SITRANS FP230/FPS200 orifice meter run ↗	**7ME173**	■	-	■	■	■	**0**	-	■	■	■	■
↗ Click on the Article No. for the online configuration in the PIA Life Cycle Portal.												
Communication												
HARTHART (4 ... 20 mA)		**0**										
Without transmitter		**8**										
Nominal size												
DN 10 (3/8“)				**0**	**A**							
DN 15 (½“)				**0**	**B**							
DN 20 (¾“)				**0**	**C**							
DN 25 (1“)				**0**	**D**							
DN 32 (1¼“)				**0**	**E**							
DN 40 (1½“)				**1**	**C**							
DN 50 (2“)				**1**	**D**							
Nominal pressure												
Flange EN 1092-1 Form B1 PN 6						**A**						
Flange EN 1092-1 Form B1 PN 10						**B**						
Flange EN 1092-1 Form B1 PN 16						**C**						
Flange EN 1092-1 Form B1 PN 25						**D**						
Flange EN 1092-1 Form B1 PN 40						**E**						
Flange EN 1092-1 Form B1 PN 64						**F**						
Flange ASME B16.5 Class 150						**Q**						
Flange ASME B16.5 Class 300						**R**						
Flange ASME B16.5 Class 600						**S**						
Wetted parts material												
Pipe/Flanges: Carbon steel / orifice plate: 316L/1.4404							**4**					
Pipe/Flanges: 316L/1.4404 / orifice plate: 316L/1.4404							**5**					
System design												
Compact design for dry gases (horizontal and vertical pipes)									**0**			
Compact design for liquids									**1**			
Compact design for wet gases (only vertical pipes)									**2**			
Compact design for steam									**3**			
Remote design for dry gases									**4**			
Remote design for liquids									**5**			
Remote design for wet gases									**6**			
Remote design for steam									**7**			
Type of protection of pressure transmitter												
No Ex / without pressure tranmitter										**A**		
Intrinsic safety										**B**		
Explosion proof										**C**		
Intrinsic safety, Explosion proof										**D**		
Dust ignition proof zone 21/22 (DIP), increased safety zone 2										**L**		
Dust ignition proof zone 20/21/22 (DIP), increased safety zone 2										**M**		
Intrinsic safety, Explosion proof, Dust ignition proof zone 21/22 (DIP), increased safety zone 2										**S**		
Intrinsic safety, Explosion proof, Dust ignition proof zone 21/22 (DIP), increased safety zone 2, class division										**T**		
Electrical connections/cable entries of pressure transmitter												
Without pressure transmitter											**A**	
2 x M20 x 1.5											**F**	
2 x 1/2-14 NPT											**M**	
Local operation/display of pressure transmitter												
Without display (closed lid) / without pressure tranmitter												**0**
With display (closed lid)												**1**
With display (lid with glass window)												**2**

© Siemens 2020

Selection and ordering data

	Order code
*Further designs**	
Please add "**-Z**" to Article No. and specify Order code(s) and plain text.	
Certificates of primary element incl. manifolds	
Inspection certificate of the primary element (EN 10204-3.1) - material of pressure-containing and wetted parts	**C52**
Factory certificate of the primary element (EN 10204-2.2) - wetted parts (MR 0175-2015)	**C54**
Dimensional record of the primary element	**C55**
Inspection certificate (DIN EN 571-1) - dye penetration test of weldings	**C56**
Hydrostatic pressure test of the primary element (EN 13480-5) of weldings	**C58**
Dimensional drawing 1:1 DWG of the primary element	**C59**
Maximum measuring span of pressure transmitter	
20 mbar (8.037 inH_2O)	**I01**
60 mbar (24.11 inH_2O)	**I02**
250 mbar (100.5 inH_2O)	**I03**
600 mbar (241.1 inH_2O)	**I04**
1600 mbar (643 inH_2O)	**I05**
Shut-off valves	
With mounted shut-off valves DN8 made of carbon steel, up to 300 °C with tube fitting 12 mm	**T50**
With mounted shut-off valves DN8 made of stainless steel, up to 300 °C with tube fitting 12 mm	**T51**
With mounted shut-off valves DN8 made of carbon steel, up to 300 °C and condensate vessel made of carbon steel with tube fitting 12 mm	**T56**
With mounted shut-off valves DN8 made of stainless steel, and condensate vessel made of stainless steel with tube fitting 12 mm	**T57**
Valve manifolds for mounting on primary element	
With mounted manifold (3-fold) made of stainless steel, PTFE sealings, cadmium-plated steel screws	**U40**
With mounted manifold (3-fold) made of stainless steel, PTFE sealings, stainless steel screws	**U41**
With mounted manifold (5-fold) made of stainless steel, PTFE sealings, cadmium-plated steel screws	**U42**
With mounted manifold (5-fold) made of stainless steel, PTFE sealings, stainless steel screws	**U43**
With mounted manifold (5-fold) made of carbon steel, up to 300 °C cadmium-plated steel screws and condensate vessel made of carbon steel	**U46**
With mounted manifold (3-fold) made of stainless steel, PTFE sealings, stainless steel screws and condensation vessels incl. filling union 1/2" NPT made of stainless steel	**U47**
With enclosed manifold (3-fold) made of stainless steel, PTFE sealings, cadmium-plated steel screws with tube fitting 12 mm	**U50**
With enclosed manifold (3-fold) made of stainless steel, PTFE sealings, stainless steel screws with tube fitting 12 mm	**U51**
With enclosed manifold (5-fold) made of stainless steel, PTFE sealings, cadmium-plated steel screws with tube fitting 12 mm	**U52**
With enclosed manifold (5-fold) made of stainless steel, PTFE sealings, stainless steel screws with tube fitting 12 mm	**U53**
With enclosed manifold (5-fold) made of carbon steel, up to 300 °C cadmium-plated steel screws with tube fitting 12 mm	**U56**
Application data	
ID number of the primary element according to sizing tool	**Y40**

* For further options, please refer to SITRANS P320.

Scope of delivery

- Orifice meter run consisting of 2 parts, each with flanged ends, pipe, and annular chamber with integrated pressure tapping
- Orifice plate mounted in annular chamber
- Gasket for annular chamber
- Screws and nuts for annular chamber
- Condensation pots for steam applications
- Shut-off valves for remote design (options T5x selected in PIA)
- Manifold for compact/remote design (options U4x, U5x selected in PIA)

© Siemens 2020

Dimensional drawings

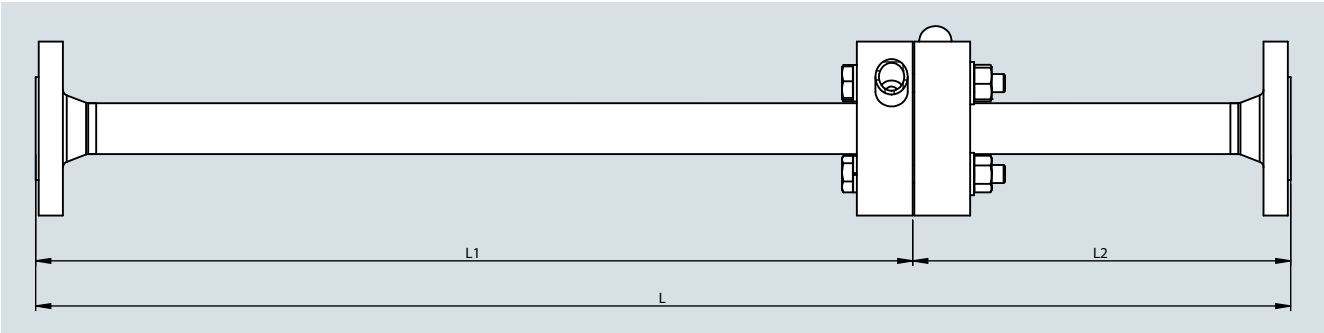

Overall length

Nominal size	DN 10	DN 15	DN 20	DN 25	DN 32	DN 40	DN 50
	3/8“	½“	¾“	1“	1 ¼“	1 ½“	2“
L	400	550	700	900	1100	1300	1500
L1	230	380	500	650	800	1000	1200
L2	170	170	200	250	300	300	300

Pipe dimensions

Carbon steel							
Nominal size	**PN 16**	**PN 40**	**PN 63**	**Nominal size**	**Class 150**	**Class 300**	**Class 600**
DN 10	21.3 × 6.3	21.3 × 6,3	21.3 × 6,3	**3/8"**	21.3 × 7.47*)	21.3 × 7.47*)	21.3 × 7.47*)
DN 15	21.3 × 2.6	21.3 × 2.6	21.3 × 2.6	**½"**	21.3 × 3.73	21.3 × 3.73	21.3 × 3.73
DN 20	26.9 × 2.6	26.9 × 2.6	26.9 × 2.6	**¾"**	26.7 × 2.87	26.7 × 2.87	26,7 × 2.87
DN 25	33.7 × 2.6	33,7 × 2.6	33,7 × 2.6	**1"**	33.4 × 3.38	33.4 × 3.38	33.4 × 3.38
DN 32	42.4 × 2.6	42.4 × 2.6	n/a	**1 ¼"**	42.2 × 3.56	42.2 × 3.56	42.2 × 3.56
DN 40	48.3 × 2.6	48.3 × 2.6	48.3 × 2.9	**1 ½"**	48.3 × 3.68	48.3 × 3.68	48.3 × 3.68
DN 50	60.3 × 2.9	60.3 × 2.9	60.3 × 3.6	**2"**	60.3 × 3.91	60.3 × 3.91	60.3 × 3.91

Stainless steel							
Nominal size	**PN 16**	**PN 40**	**PN 63**	**Nominal size**	**Class 150**	**Class 300**	**Class 600**
DN 10	21.3 × 7.47	21.3 × 7.47	21.3 × 7.47	**3/8"**	21.3 × 2.77*)	21.3 × 2.77*)	21.3 × 2.77*)
DN 15	21.3 × 2.77	21.3 × 2.77	21.3 × 3.73	**½"**	21.3 × 2.77	21.3 × 2.77	21.3 × 2.77
DN 20	26.7 × 2.87	26.7 × 2.87	26.7 × 3.91	**¾"**	26.7 × 2.87	26.7 × 2.87	26.7 × 2.87
DN 25	33.4 × 3.38	33.4 × 3.38	33.4 × 3.38	**1"**	33.4 × 3.38	33.4 × 3.38	33.4 × 3.38
DN 32	42.2 × 3.56	42.2 × 3.56	n/a	**1 ¼"**	42.2 × 3.56	42.2 × 3.56	42.2 × 3.56
DN 40	48.3 × 2.77	48.3 × 2.77	48.3 × 3.68	**1 ½"**	48.3 × 3.68	48.3 × 3.68	48.3 × 3.68
DN 50	60.3 × 3.91	60.3 × 3.91	60.3 × 3.91	**2"**	60.3 × 3.91	60.3 × 3.91	60.3 × 3.91

*) Orifice meter runs with 3/8“ diameter will be built with ½" flanges.

© Siemens 2020

Orifice plate

Application

SITRANS FPS200 remote design

Orifice plate for installation between flanges in stainless steel for flow measurement of gas, steam and liquid.

Design

Orifice plates for the installation with flange tappings consist of the orifice plate with a welded-on marking and grip plate. The plates have no pressure tappings and are therefore normally mounted between measuring flanges containing the pressure tappings.

Pressure tapping

- Not included

Sealing face

- According to EN 1092-1: flat (for flanges form B1 and B2)
- According to ASME B16.5: flat (for flanges RF and SF)

Material

- 316L/1.4404

© Siemens 2020

Selection and ordering data

	Article No.											
SITRANS FP230/FPS200 insertion orifice plate ↗	**7ME174**	■	-	■	■	■	■	**0**	-	■	■	■	■
↗ Click on the Article No. for the online configuration in the PIA Life Cycle Portal.													
Communication													
HART (4 ... 20 mA)		**0**											
Without transmitter		**8**											
Nominal size													
DN 50 (2“)				**1**	**D**								
DN 65 (2½“)				**1**	**E**								
DN 80 (3“)				**1**	**F**								
DN 100 (4“)				**2**	**G**								
DN 125 (5“)				**2**	**H**								
DN 150 (6“)				**2**	**J**								
DN 200 (8“)				**2**	**K**								
DN 250 (10“)				**2**	**L**								
DN 300 (12“)				**2**	**M**								
DN 350 (14“)				**2**	**N**								
DN 400 (16“)				**2**	**P**								
DN 450 (18“)				**2**	**Q**								
DN 500 (20“)				**2**	**R**								
DN 600 (24“)				**2**	**S**								
Nominal pressure													
Flange EN 1092-1 Form B1 PN 6						**A**							
Flange EN 1092-1 Form B1 PN 10						**B**							
Flange EN 1092-1 Form B1 PN 16						**C**							
Flange EN 1092-1 Form B1 PN 25						**D**							
Flange EN 1092-1 Form B1 PN 40						**E**							
Flange EN 1092-1 Form B1 PN 64						**F**							
Flange EN 1092-1 Form B1 PN 100						**G**							
Flange ASME B16.5 Class 150						**Q**							
Flange ASME B16.5 Class 300						**R**							
Flange ASME B16.5 Class 600						**S**							
Wetted parts material													
Orifice plate: 316L/1.4404							**6**						
System design													
Without connection for pressure lines										**8**			
Type of protection of pressure transmitter													
No Ex / without pressure tranmitter											**A**		
Intrinsic safety											**B**		
Explosion proof											**C**		
Intrinsic safety, Explosion proof											**D**		
Dust ignition proof zone 21/22 (DIP), increased safety zone 2											**L**		
Dust ignition proof zone 20/21/22 (DIP), increased safety zone 2											**M**		
Intrinsic safety, Explosion proof, Dust ignition proof zone 21/22 (DIP), increased safety zone 2											**S**		
Intrinsic safety, Explosion proof, Dust ignition proof zone 21/22 (DIP), increased safety zone 2, class division											**T**		
Electrical connections/cable entries of pressure transmitter													
Without pressure transmitter												**A**	
2 x M20 x 1.5												**F**	
2 x 1/2-14 NPT												**M**	
Local operation/display of pressure transmitter													
Without display (closed lid) / without pressure tranmitter													**0**
With display (closed lid)													**1**
With display (lid with glass window)													**2**

© Siemens 2020

Orifice plate

Selection and ordering data

	Order code
Further designs*	
Please add "**-Z**" to Article No. and specify Order code(s) and plain text.	
Certificates of primary element incl. manifolds	
Inspection certificate of the primary element (EN 10204-3.1) - material of pressure-containing and wetted parts	**C52**
Factory certificate of the primary element (EN 10204-2.2) - wetted parts (MR 0175-2015)	**C54**
Dimensional record of the primary element	**C55**
Dimensional drawing 1:1 DWG of the primary element	**C59**
Maximum measuring span of pressure transmitter	
20 mbar (8.037 inH_2O)	**I01**
60 mbar (24.11 inH_2O)	**I02**
250 mbar (100.5 inH_2O)	**I03**
600 mbar (241.1 inH_2O)	**I04**
1600 mbar (643 inH_2O)	**I05**
Valve manifolds for mounting on primary element	
With enclosed manifold (3-fold) made of stainless steel, PTFE sealings, cadmium-plated steel screws with tube fitting 12 mm	**U50**
With enclosed manifold (3-fold) made of stainless steel, PTFE sealings, stainless steel screws with tube fitting 12 mm	**U51**
With enclosed manifold (5-fold) made of stainless steel, PTFE sealings, cadmium-plated steel screws with tube fitting 12 mm	**U52**
With enclosed manifold (5-fold) made of stainless steel, PTFE sealings, stainless steel screws with tube fitting 12 mm	**U53**
Application data	
ID number of the primary element according to sizing tool	**Y40**

* For further options, please refer to SITRANS P320.

Scope of delivery

- Orifice plate
- Manifold for compact/remote design (options U4x, U5x selected in PIA)

Dimensional drawings

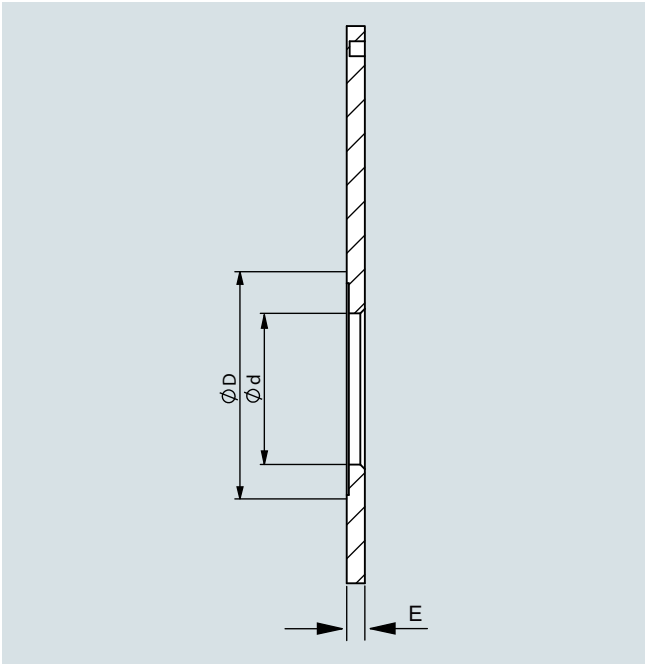

Nominal size of orifice plate

DIN/EN

	Nominal size, up to														
DN	**50**	**65**	**80**	**100**	**125**	**150**	**175**	**200**	**250**	**300**	**350**	**400**	**450**	**500**	**600**
mm	3	3	4	4	4	4	4	4	4	4	4	4	4	6	6

ASME

	Nominal size, up to														
DN	**2"**	**2.5"**	**3"**	**4"**	**5"**	**6"**	**7"**	**8"**	**10"**	**12"**	**14"**	**16"**	**18"**	**20"**	**22"**	**24"**
mm	3	3	3	3	3	3	6	6	6	6	6	10	10	10	12	12

*) Not standardized in DIN standard.

Up to DN 50 adjusted for general practice. Nominal size designed for a differential pressure of up to 1000 mbar.

© Siemens 2020

Application

SITRANS FPS200 remote design

Orifice flange pair according to ASME B36.16 with orifice plate in carbon steel (flanges) or stainless steel for flow measurement of gas and liquid.

Design

The orifice plate is mounted between traditional orifice flanges according to ASME B16.36. The orifice flanges are manufactured with integral pressure tappings. System design is always remote. The orifice plate can be exchanged. The flanges have to be welded into the pipe.

- Design of orifice plate, see Orifice plates

Differential pressure tapping

- In the flange: Differential pressure tapping in special measuring flanges with integrated connectors in the flange, always remote

Tapping sockets

- 0°

Connection length

- For gases and liquids suitable for up to approx. 80 mm pipe insulation

Sealing face

- According to ASME B16.5: flat

Materials

- Flange carbon steel, plate 316L
- Flange and plate 316L

Gaskets

- Spiral graphite

© Siemens 2020

Orifice plate with orifice flange according to ASME B16.36

Selection and ordering data

Selection and Ordering data ↗	Article No. 7ME175 ■ - ■ ■ ■ ■ 0 - ■ ■ ■ ■
↗ Click on the Article No. for the online configuration in the PIA Life Cycle Portal.	
Communication	
HART (4 ... 20 mA)	0
Without transmitter	8
Nominal size	
DN 50 (2“)	1 D
DN 65 (2½“)	1 E
DN 80 (3“)	1 F
DN 100 (4“)	2 G
DN 125 (5“)	2 H
DN 150 (6“)	2 J
DN 200 (8“)	2 K
DN 250 (10“)	2 L
DN 300 (12“)	2 M
DN 350 (14“)	2 N
DN 400 (16“)	2 P
DN 450 (18“)	2 Q
DN 500 (20“)	2 R
DN 600 (24“)	2 S
Nominal pressure	
Flange ASME B16.5 Class 300	R
Flange ASME B16.5 Class 600	S
Wetted parts material	
Flanges: Carbon steel / orifice plate: 316L/1.4404	7
Flanges: 316L/1.4404 / orifice plate: 316L/1.4404	8
System design	
Remote design for dry gases	4
Remote design for liquids	5
Remote design for wet gases	6
Type of protection of pressure transmitter	
No Ex / without pressure tranmitter	A
Intrinsic safety	B
Explosion proof	C
Intrinsic safety, Explosion proof	D
Dust ignition proof zone 21/22 (DIP), increased safety zone 2	L
Dust ignition proof zone 20/21/22 (DIP), increased safety zone 2	M
Intrinsic safety, Explosion proof, Dust ignition proof zone 21/22 (DIP), increased safety zone 2	S
Intrinsic safety, Explosion proof, Dust ignition proof zone 21/22 (DIP), increased safety zone 2, class division	T
Electrical connections/cable entries of pressure transmitter	
Without pressure transmitter	A
2 x M20 x 1.5	F
2 x 1/2-14 NPT	M
Local operation/display of pressure transmitter	
Without display (closed lid) / without pressure tranmitter	0
With display (closed lid)	1
With display (lid with glass window)	2

© Siemens 2020

Selection and ordering data	Order code
Further designs*	
Please add "**-Z**" to Article No. and specify Order code(s) and plain text.	
Certificates of primary element incl. manifolds	
Inspection certificate of the primary element (EN 10204-3.1) - material of pressure-containing and wetted parts	**C52**
Factory certificate of the primary element (EN 10204-2.2) - wetted parts (MR 0175-2015)	**C54**
Dimensional record of the primary element	**C55**
Dimensional drawing 1:1 DWG of the primary element	**C59**
Maximum measuring span of pressure transmitter	
20 mbar (8.037 inH_2O)	**I01**
60 mbar (24.11 inH_2O)	**I02**
250 mbar (100.5 inH_2O)	**I03**
600 mbar (241.1 inH_2O)	**I04**
1600 mbar (643 inH_2O)	**I05**
Shut-off valves	
With mounted shut-off valves DN8 made of carbon steel, up to 300 °C with tube fitting 12 mm	**T50**
With mounted shut-off valves DN8 made of stainless steel, up to 300 °C with tube fitting 12 mm	**T51**
Valve manifolds for mounting on primary element	
With enclosed manifold (3-fold) made of stainless steel, PTFE sealings, cadmium-plated steel screws with tube fitting 12 mm	**U50**
With enclosed manifold (3-fold) made of stainless steel, PTFE sealings, stainless steel screws with tube fitting 12 mm	**U51**
With enclosed manifold (5-fold) made of stainless steel, PTFE sealings, cadmium-plated steel screws with tube fitting 12 mm	**U52**
With enclosed manifold (5-fold) made of stainless steel, PTFE sealings, stainless steel screws with tube fitting 12 mm	**U53**
Application data	
ID number of the primary element according to sizing tool	**Y40**

* For further options, please refer to SITRANS P320.

Scope of delivery

- Orifice plate
- Orifice flanges according to ASME B16.36 with pressure tappings
- 2x Gaskets for orifice flanges
- Screws and nuts
- Shut-off valves for remote design (options T5x selected in PIA)
- Manifold for compact/remote design (options U4x, U5x selected in PIA)

© Siemens 2020

Dimensional drawings

Overall length

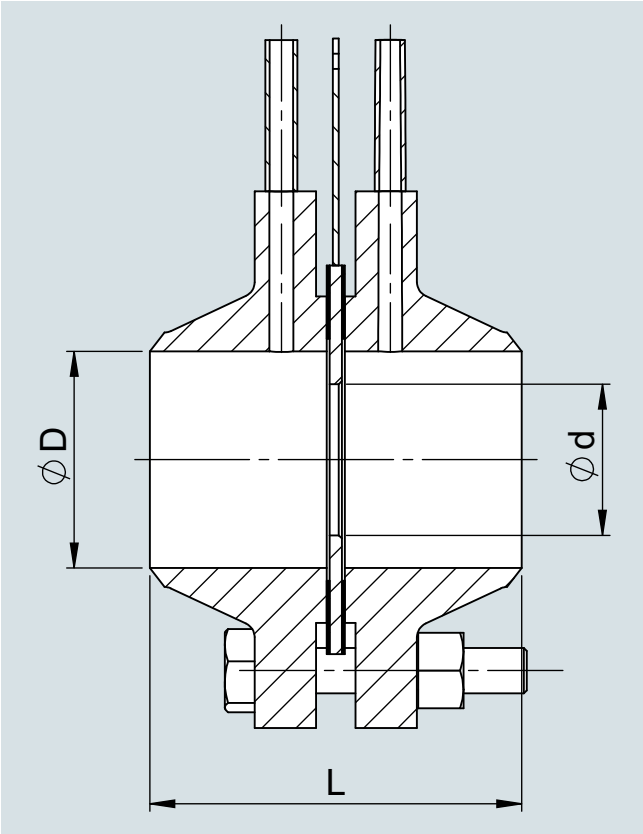

DN/Inch	PN/lbs	L	Hex nut bolt	Bolts (pcs.)	Gasket
24	600	433.10	1 7/8	24	2.0
20	600	407.70	1 5/8	24	2.0
18	600	395.00	1 5/8	20	2.0
16	600	382.30	1 1/2	20	2.0
14	600	352.90	1 3/8	20	2.0
12	600	333.60	1 1/4	20	2.0
10	600	327.50	1 1/4	16	2.0
8	600	286.40	1 1/8	12	2.0
6	600	254.40	1	12	2.0
4	600	222.90	7/8	8	2.0
3	600	184.80	3/4	8	2.0
2 1/2	600	184.80	3/4	8	2.0
2	600	178.70	5/8	8	2.0
24	300	350.30	1 1/2	24	2.0
20	300	338.10	1 1/4	24	2.0
18	300	331.50	1 1/4	24	2.0
16	300	306.10	1 1/4	20	2.0
14	300	295.50	1 1/8	20	2.0
12	300	270.10	1 1/8	16	2.0
10	300	244.70	1	16	2.0
8	300	229.50	7/8	12	2.0
6	300	207.16	3/4	12	2.0
4	300	190.90	3/4	8	2.0
3	300	184.80	3/4	8	2.0
2 1/2	300	184.80	3/4	8	2.0
2	300	178.70	5/8	4	2.0

Nominal size of orifice plate

DIN/EN

	Nominal size, up to														
DN	**50**	**65**	**80**	**100**	**125**	**150**	**175**	**200**	**250**	**300**	**350**	**400**	**450**	**500**	**600**
mm	3	3	4	4	4	4	4	4	4	4	4	4	4	6	6

ASME

	Nominal size, up to														
DN	**2"**	**2.5"**	**3"**	**4"**	**5"**	**6"**	**7"**	**8"**	**10"**	**12"**	**14"**	**16"**	**18"**	**20"**	**22"**	**24"**
mm	3	3	3	3	3	3	6	6	6	6	6	10	10	10	12	12

Nominal size designed for a differential pressure of up to 1 000 mbar.

The specified dimensions are approximate dimensions, exact dimensions depend on the gasket used.

© Siemens 2020

Overview

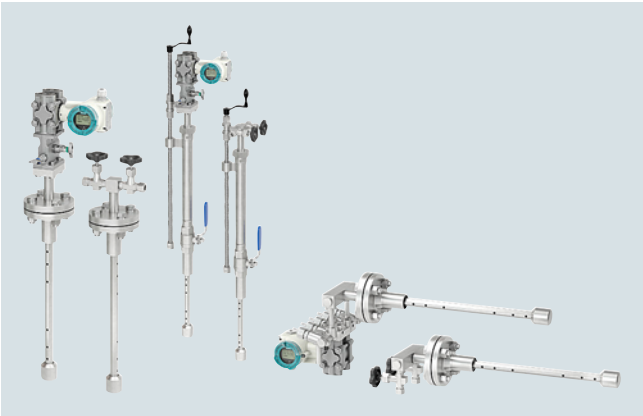

Due to the robust technology and the simple principle of measurement, averaging pitot tubes can be used in many different ways even under difficult conditions and offer considerable advantages over other measuring technology from easy installation to long-term measuring stability.

Further special advantages are the possibilities of bidirectional flow measurement as well as the integration of temperature and pressure measurement.

Benefits

- Easy to retrofit (no rebuilding of the pipe)
- Easy to install
- Good for large nominal sizes
- Wide range of application (media, nominal sizes, process conditions)
- Minor measurement inaccuracy
- Special designs possible for special applications
- Also work in rectangular ducts and pipes

Application

- Technical Gases
- Compressed Air
- Exhaust Air
- Fresh and Combustion Air
- Heat Transfer Fluids
- Water
- Exhaust Gas
- Steam/Heat Quantities

Design

Basics: Averaging pitot tubes for flow measurement

- Mounting by insertion into the pipe (no flange-to-flange instrument)
- Differential pressure generation through forced flow
- Variation of the classic "pitot tube" through multiple metering orifices (so-called "averaging pitot tube")
- Design follows manufacturer guidelines, not standardized

Designs

- Averaging Pitot Tube for gas and liquids (7ME161)
- Averaging Pitot Tube for steam (7ME162)
- Averaging Pitot Tube with FASTLOK (7ME163), to remove sensor during operation without interruption of process

System design

- Compact design for dry gases and liquids without integrated temperature measurement
- Compact design for wet gases with or without integrated temperature measurement as well as for dry gases and liquids with integrated temperature measurement
- Compact design for steam with or without integrated temperature measurement
- Remote design for dry or wet gases, liquids and steam

Function

Design of the averaging pitot tube

Similar to other differential pressure devices averaging pitot tubes create a differential pressure to measure flow. They are not specified in the general standard ISO 5167, but they follow the same technical principle. In contrast to the classic differential pressure sensors, averaging pitot tube sensors are not "inline" devices but consist of a "profile" that is inserted into the side of the pipeline.

Differential pressure is created when fluid flows around the profile of the averaging pitot tube. Since the constriction of the pipeline by the profile in relation to the cross-sectional area is much smaller than, for example, with an orifice plate, the created differential pressure and the respective permanent pressure drop are smaller.

The flow comes to a complete stop at the upstream side of the averaging pitot tube creating the upstream pressure. At the downstream side a negative pressure is created by the so-called Kármán vortex street. The differential pressure (difference between upstream pressure and negative pressure) is the measurement signal and is proportional to the flow rate. This results in the following basic formula for flow measurement with averaging pitot tubes: $q_m = A \bullet k \bullet \sqrt{(2 \bullet \Delta p \bullet \rho)}$

q_m: mass flow

A: cross-sectional area of the pipe

k: device factor of the pitot tube

Δp: differential pressure

ρ: density

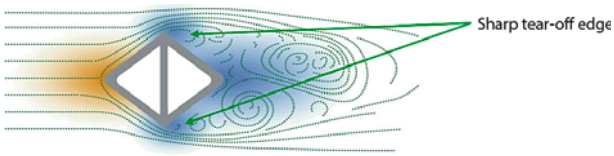

The k-factor is the device factor of the averaging pitot tube and is determined, among other things, by the shape of the profile of the pitot tube. Thanks to the sharp-edged shape of the profile, it remains constant over a very wide Reynolds number range and enables linear flow measurement.

The averaging pitot tube features the same number of measuring openings on the front and back. The special distribution of the measuring openings over the cross section allows geometric averaging in case of uneven flow distribution and thus an accurate measurement even with very short inlet and outlet distances. The generated upstream and downstream pressures are averaged in the respective chambers and routed to the differential pressure transmitter.

© Siemens 2020

Technical specifications

General design	
Working principle	Multi-port averaging pitot tube for round and rectangular pipes
Media	• Steam (saturated, superheated) • Gas (dry, up to 100% water saturated) (automatic purging unit for high dust applications on request) • Liquids (water, non-conductive liquids, oil, etc.)
Transmitter installation	• Compact mount with differential pressure transmitter • Remote mounted differential pressure transmitter
Bidirectional flow	Yes (symmetric sensor design)
Calculation	According to manufacturer standard
Accuracy	
Linearity (of Sensor k-Factor)	Re > 20.000: 1%
Repeatability (of Sensor k-Factor)	Re > 20.000: 0,1%
Measurement range	Typically, up to 1:10 (real measurement range depends on transmitter performance)
Operating Conditions	
Pressure	Flange: Max. PN 100 Cutting Ring: Max. PN 40 (max. 180 °C) FASTLOK: Max. PN 16 (max. 180 °C) (Higher pressure ratings on request)
Temperature	Stainless Steel sensor: -100 ... 500 °C 16Mo3: -20 ... 530 °C Hastelloy: -20 ... 700 °C (exact maximum temperature depends on sensor design, feasibility will be calculated by sizing tool)
Pressure loss	generally, <10 % of differential pressure
Installation conditions	
Straight inlet diameter	7x Inner diameter behind 90 ° elbow
Straight outlet diameter	3x Inner diameter (for detailed calculation of recommended installation pipe length please refer to sizing tool or manual)
Design	
Material sensor	Standard: Stainless steel 1.4404/ AISI 316L Optional: 1.5415/16Mo3, Hastelloy C22 (other materials on request)
Diameter	40 ... 4000 mm (larger sensors on request)
Material mounting parts	Standard: Carbon Steel Optional: Stainless Steel 1.4404 / AISI 316L (other materials on request)
Process connection	Flange EN 1092-1 B1 Flange ASME B16.5 RF Cutting Ring Fitting FASTLOK (retractable design) (other process connections on request)
Thickness of pipe insulation	0 ... 200 mm
Approvals	
Hazardous area	(see differential pressure transmitter)
Enclosure rating	(see differential pressure transmitter)
Operational safety	(see differential pressure transmitter)
QAL1, SIRA	

Options

Further versions that are available on request:

- Weld-in sensor for high pressure steam
- Calibrated metering pipes
- FASTLOK with flange ball valve
- Etc.

More information

For more information please see the Installation Instructions and the Instruction Manuals SITRANS P on SIOS.

© Siemens 2020

Application

SITRANS FP330 compact design

SITRANS FPS300 remote design

These sensors are using the averaging pitot tube technology and can be used wherever flow rates of gases or liquids are to be measured.

© Siemens 2020

Design

Mounting type

- Flange, cutting ring (carbon steel, stainless steel)

The averaging pitot tube can be mounted to pipes and ducts either with a traditional flange or a cutting ring fitting:

Flange mounting

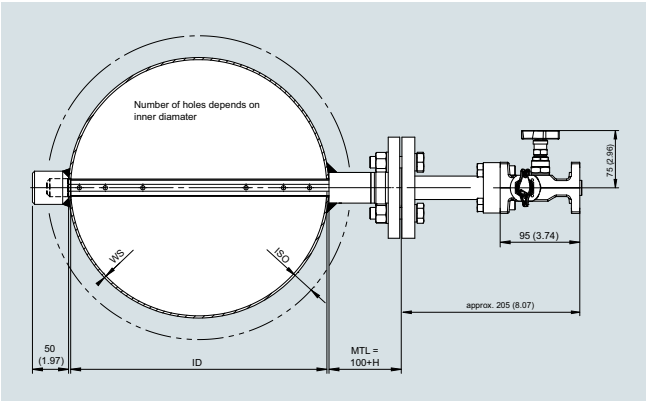

Cutting ring mounting

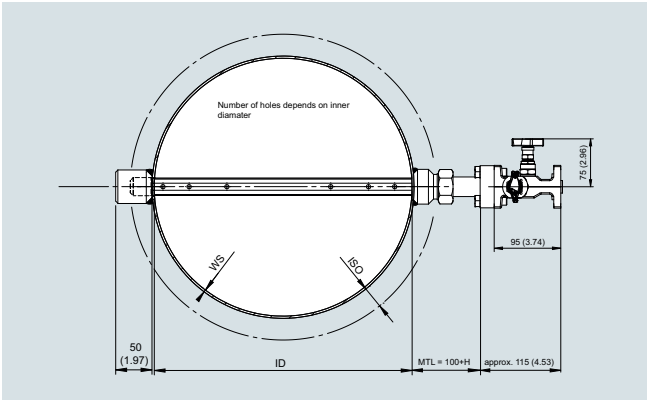

The required mounting components are always supplied together with the averaging pitot tube.

Flange mounting style can be applied to a large range of applications and is widely accepted. Cutting ring mounting style has a limited temperature and pressure range (see max. pressure and max. temperature below) but provides an economic alternative for simple flow measurement applications.

Dimensions of mounting parts

Flange	Profile 10	Profile 22	Profile 32	Profile 50
PN 16	(min. PN 40)	(min. PN 40)	(min. PN 40)	DN 80
PN 40	DN 15	DN 32	DN 40	On request
PN 100	DN 25	DN 40	DN 40	On request
Class 150	½“	1 ¼“	1 ½“	3“
Class 300	½“	1 ¼“	1 ½“	On request
Class 600	1“	1 ½“	1 ½“	On request

Cutting ring	Profile 10	Profile 22
PN 40	M22	M36

Standard lengths of mounting parts (MTL)

Profile 10	Profile 22	Profile 32	Profile 50
80 mm	100 mm	100 mm	120 mm

Mounting part length can be increased based on thermal pipe insulation in 50 mm steps (H).

© Siemens 2020

Design (continued)

System design of differential pressure connection

The differential pressure transmitter can be installed in compact design (at the averaging pitot tube) or in remote design.

Gas and liquid application, compact design

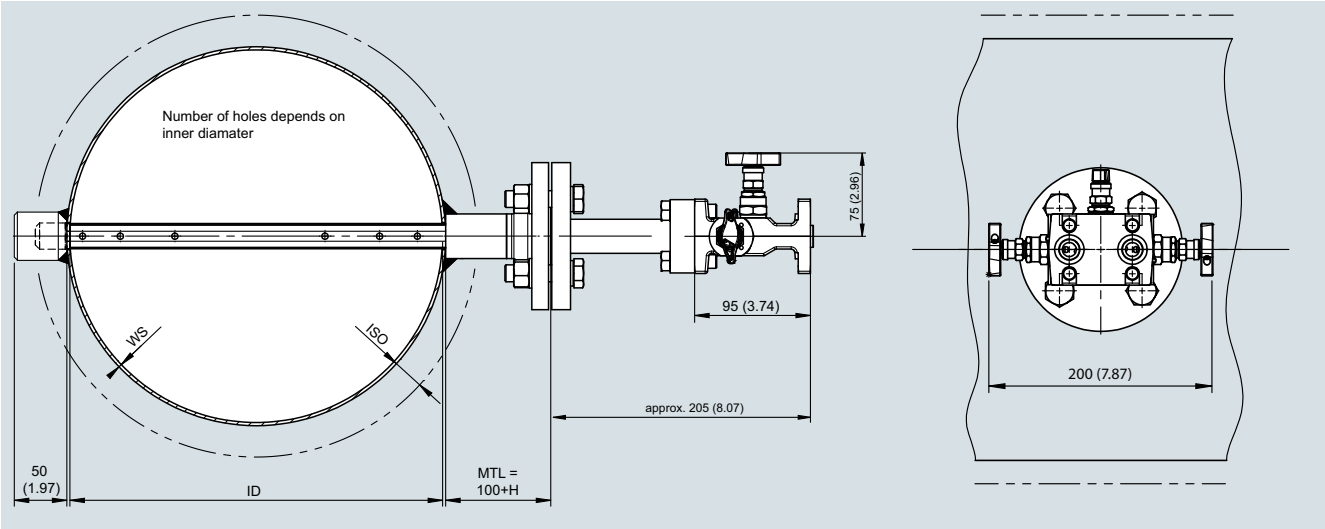

For gas and liquid applications with compact design the averaging pitot tube sensor is equipped with a traditional flange plate to mount manifold and differential pressure transmitter directly at the sensor.

Gas and liquid application, remote design

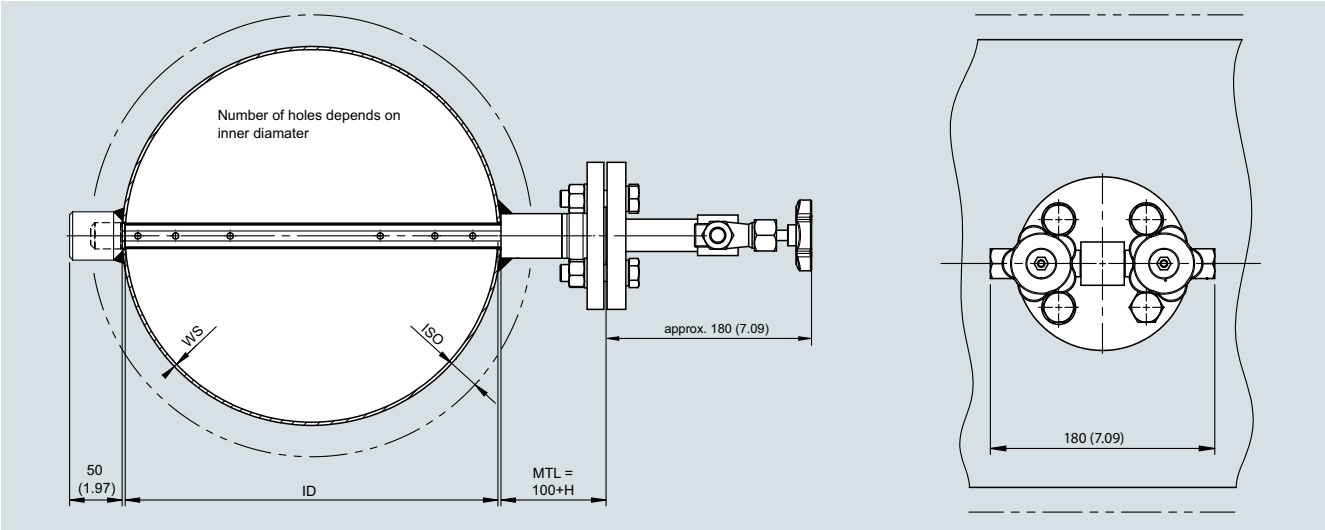

For gas and liquid applications with remote design the averaging pitot tube sensor is equipped with valves mounted directly to the sensor. Impulse pressure piping (not supplied) has to be installed from the valves to the remote mounted manifold and differential pressure transmitter.

© Siemens 2020

Design (continued)

Gas and liquid application, compact design for wet gases and/or with integrated temperature measurement with PT100

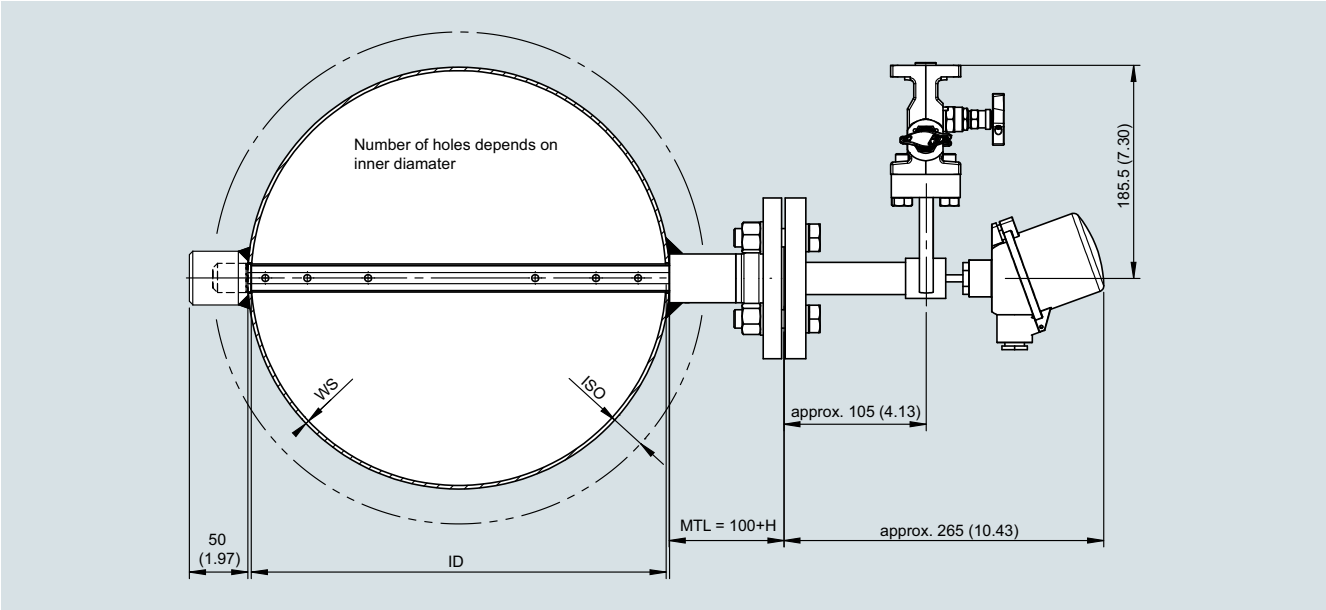

The averaging pitot tube sensor is equipped with a 90° rotated flange plate to mount manifold and differential pressure transmitter directly at the sensor. The rotated flange plate serves the purpose of providing space for the integrated temperature measurement and will also allow condensed water of wet gases to flow back from the outside assembly into the averaging pitot tube. This is particularly useful for installations in vertical pipes, or in horizontal pipes where the averaging pitot tube has to be mounted from the side. If the pitot tube can be mounted from the top, a regular flange plate is sufficient.

Averaging pitot tube materials
- Standard: 1.4404/316L
- Option: Hastelloy C-22

Mounting parts materials
- Carbon steel, 1.4404/316L

Flange gaskets
- Up to PN 40: Klingersil C4400
- As of PN 63: graphite with stainless steel insert

Integrated temperature measurement using PT100
- Can be integrated in averaging pilot tube (> DN 100, only 1.4404, ≤ PN 40)

Max. pressure
- EN: up to PN 100 (for flange), PN 40 (for cutting ring)
- ASME: up to Class 600 (for flange)

Max. temperature
- Mounting parts:
  - Flange: according to EN 1092-1 or ASME B16.5
  - Cutting ring: 200 °C (carbon steel), 400 °C (stainless steel)
- Sensor: will be calculated by sizing tool

© Siemens 2020

Selection and ordering data

	Article No.											
SITRANS FP330/FPS300 averaging pitot tube for gas and liquids ↗	**7ME161**	■	-	■	■	■	■	-	■	■	■	■
↗ Click on the Article No. for the online configuration in the PIA Life Cycle Portal.												
Communication												
HART (4 ... 20 mA)		**0**										
Without transmitter		**8**										
Nominal size/Sensor type (according to sizing tool)												
DN 40/Sensor type 10				**1**	**C**							
DN 50/Sensor type 10				**1**	**D**							
DN 65/Sensor type 10				**1**	**E**							
DN 80/Sensor type 10				**1**	**F**							
DN 100/Sensor type 10				**1**	**G**							
DN 125/Sensor type 10				**1**	**H**							
DN 100/Sensor type 22				**2**	**G**							
DN 125/Sensor type 22				**2**	**H**							
DN 150/Sensor type 22				**2**	**J**							
DN 200/Sensor type 22				**2**	**K**							
DN 250/Sensor type 22				**2**	**L**							
DN 300/Sensor type 22				**2**	**M**							
DN 350/Sensor type 22				**2**	**N**							
DN 400/Sensor type 22				**2**	**P**							
DN 450/Sensor type 22				**2**	**Q**							
DN 500/Sensor type 22				**2**	**R**							
DN 600/Sensor type 22				**2**	**S**							
DN 700/Sensor type 22				**2**	**T**							
DN 800/Sensor type 22				**2**	**U**							
DN 900/Sensor type 22				**2**	**V**							
DN 1000/Sensor type 22				**2**	**W**							
DN 1100/Sensor type 22				**2**	**X**							
DN 1200/Sensor type 22				**2**	**Y**							
DN 300/Sensor type 32				**3**	**M**							
DN 350/Sensor type 32				**3**	**N**							
DN 400/Sensor type 32				**3**	**P**							
DN 450/Sensor type 32				**3**	**Q**							
DN 500/Sensor type 32				**3**	**R**							
DN 600/Sensor type 32				**3**	**S**							
DN 700/Sensor type 32				**3**	**T**							
DN 800/Sensor type 32				**3**	**U**							
DN 900/Sensor type 32				**3**	**V**							
DN 1000/Sensor type 32				**3**	**W**							
DN 1100/Sensor type 32				**3**	**X**							
DN 1200/Sensor type 32				**3**	**Y**							
DN 1400/Sensor type 32				**4**	**A**							
DN 1500/Sensor type 32				**4**	**B**							
DN 1600/Sensor type 32				**4**	**C**							
DN 1800/Sensor type 32				**4**	**D**							
DN 2000/Sensor type 32				**4**	**E**							
DN 2200/Sensor type 32				**4**	**F**							
DN 2400/Sensor type 32				**4**	**G**							
DN 500/Sensor type 50				**5**	**R**							
DN 600/Sensor type 50				**5**	**S**							
DN 700/Sensor type 50				**5**	**T**							
DN 800/Sensor type 50				**5**	**U**							
DN 900/Sensor type 50				**5**	**V**							
DN 1000/Sensor type 50				**5**	**W**							

© Siemens 2020

Averaging pitot tube for gas and liquids

Selection and ordering data

	Article No.											
SITRANS FP330/FPS300 averaging pitot tube for gas and liquids	**7ME161**	■	**-**	■	■	■	■	**-**	■	■	■	■
DN 1100/Sensor type 50				**5**	**X**							
DN 1200/Sensor type 50				**5**	**Y**							
DN 1400/Sensor type 50				**6**	**A**							
DN 1500/Sensor type 50				**6**	**B**							
DN 1600/Sensor type 50				**6**	**C**							
DN 1800/Sensor type 50				**6**	**D**							
DN 2000/Sensor type 50				**6**	**E**							
DN 2200/Sensor type 50				**6**	**F**							
DN 2400/Sensor type 50				**6**	**G**							
DN 2600/Sensor type 50				**6**	**H**							
DN 2800/Sensor type 50				**6**	**J**							
DN 3000/Sensor type 50				**6**	**K**							
DN 3200/Sensor type 50				**6**	**L**							
DN 3400/Sensor type 50				**6**	**M**							
DN 3600/Sensor type 50				**6**	**N**							
DN 3800/Sensor type 50				**6**	**P**							
DN 4000/Sensor type 50				**6**	**Q**							
Process connection/wetted parts material												
Flange EN 1092-1 Form B1, PN16/stainless steel 316L/1.4404						**C**						
Flange EN 1092-1 Form B1, PN40/stainless steel 316L/1.4404						**E**						
Flange EN 1092-1 Form B1, PN64/100/stainless steel 316L/1.4404						**F**						
Flange EN 1092-1 Form B1, PN160/stainless steel 316L/1.4404						**H**						
Flange EN 1092-1 Form B1, PN16/alloy C22 (up to max. 0.5 bar g)						**L**						
Flange EN 1092-1 Form B1, PN40/alloy C22 (up to max. 0.5 bar g)						**M**						
Cutting ring PN40/stainless steel 316L/1.4404						**N**						
Flange ASME B16.5, Class 150 RF/stainless steel 316L/1.4404						**Q**						
Flange ASME B16.5, Class 300 RF/stainless steel 316L/1.4404						**R**						
Flange ASME B16.5, Class 600 RF/stainless steel 316L/1.4404						**S**						
Flange ASME B16.5, Class 900 RF/stainless steel 316L/1.4404						**T**						
Flange ASME B16.5, Class 150 RF/alloy C22 (up to max. 0.5 bar g)						**W**						
Material of welding parts/type of end support												
Carbon steel P235GH/without end support							**0**					
Stainless steel 316L/1.4404 / without end support							**1**					
Heat-resistant steel 16Mo3/1.5415 / without end support							**2**					
Carbon steel P235GH mounting components with closed end support							**3**					
Stainless steel 316L/1.4404 / closed end support							**4**					
Heat-resistant steel 16Mo3/1.5415 / closed end support							**5**					
Carbon steel P235GH/end support with flange							**6**					
Stainless steel 316L/1.4404 / end support with flange							**7**					
Thickness of pipe insulation												
Pipe insulation: 0 ... < 50 mm								**0**				
Pipe insulation: 500 ... < 100 mm								**1**				
Pipe insulation: 1000 ... < 150 mm								**2**				
Pipe insulation: 1500 ... < 200 mm								**3**				
System design												
Compact design for dry gases and liquids without integrated temperature measurement									**0**			
Compact design for wet gases with or without integrated temperature measurement as well as for dry gases and liquids with integrated temperature measurement									**1**			
Remote design for dry gases, wet gases and liquids									**3**			
Type of protection of pressure transmitter												
No Ex/without pressure tranmitter										**A**		
Intrinsic safety										**B**		
Explosion proof										**C**		
Intrinsic safety, Explosion proof										**D**		
Dust ignition proof zone 21/22 (DIP), increased safety zone 2										**L**		

© Siemens 2020

Selection and ordering data

	Article No.											
SITRANS FP330/FPS300 averaging pitot tube for gas and liquids	**7ME161**	■	**-**	■	■	■	■	**-**	■	■	■	■
Dust ignition proof zone 20/21/22 (DIP), increased safety zone 2										**M**		
Intrinsic safety, Explosion proof, Dust ignition proof zone 21/22 (DIP), increased safety zone 2										**S**		
Intrinsic safety, Explosion proof, Dust ignition proof zone 21/22 (DIP), increased safety zone 2, class division										**T**		
Electrical connections/cable entries of pressure transmitter												
Without pressure transmitter											**A**	
2 x M20 x 1.5											**F**	
2 x 1/2-14 NPT											**M**	
Local operation/display of pressure transmitter												
Without display (closed lid)/without pressure tranmitter												**0**
With display (closed lid)												**1**
With display (lid with glass window)												**2**

Selection and ordering data

	Order code
Further designs*	
Please add "**-Z**" to Article No. and specify Order code(s) and plain text.	
Certificates of primary element incl. fittings	
Inspection certificate of the primary element (EN 10204-3.1) - material of pressure-containing and wetted parts	**C52**
Factory certificate of the primary element (EN 10204-2.2) - wetted parts (MR 0175-2015)	**C54**
Dimensional record of the primary element	**C55**
Inspection certificate (DIN EN 571-1) - dye penetration test of weldings	**C56**
Hydrostatic pressure test of the primary element (EN 13480-5)	**C58**
Dimensional drawing 1:1 DWG of the primary element	**C59**
Maximum measuring span of pressure transmitter	
20 mbar (8.037 inH_2O)	**I01**
60 mbar (24.11 inH_2O)	**I02**
250 mbar (100.5 inH_2O)	**I03**
600 mbar (241.1 inH_2O)	**I04**
1600 mbar (643 inH_2O)	**I05**
Integrated temperature measurement	
Integrated temperature measurement with Pt100; cl. A; 3-wire; without head transmitter	**S01**
Integrated temperature measurement with Pt100; cl. A; 3-wire; ATEX II 1/2G Ex ia IIC T5 Ga/Gb; without head transmitter	**S02**
Integrated temperature measurement with Pt100; cl. A; 3-wire; incl. Head transmitter TH320, General Purpose (non Ex) (CE, RCM, FM, CSA) (7NG0310-0BA00-0AA0)	**S03**
Integrated temperature measurement with Pt100; cl. A; 3-wire; ATEX II 1/2G Ex ia IIC T5 Ga/Gb; incl. Head transmitter TH320, Ex i,Ex nA (ec)(Ex-Zone)/IS, NIFW, NI (Class-Div) (ATEX, IECEx, CSA, FM, NEPSI) (7NG0310-0BA00-0NA0)	**S04**
Shut-off valves	
With mounted shut-off valves DN8 made of carbon steel, up to 300 °C with tube fitting 12 mm	**T50**
With mounted shut-off valves DN8 made of stainless steel, up to 300 °C with tube fitting 12 mm	**T51**
With mounted ball valve made of stainless steel, up to 200 °C with tube fitting 12 mm	**T59**
Valve manifolds for mounting on primary element	
With mounted manifold (3-fold) made of stainless steel, PTFE sealings, cadmium-plated steel screws	**U40**

	Order code
Further designs*	
Please add "**-Z**" to Article No. and specify Order code(s) and plain text.	
With mounted manifold (3-fold) made of stainless steel, PTFE sealings, stainless steel screws	**U41**
With mounted manifold (5-fold) made of stainless steel, PTFE sealings, cadmium-plated steel screws	**U42**
With mounted manifold (5-fold) made of stainless steel, PTFE sealings, stainless steel screws	**U43**
With mounted multi-way cock made of stainless steel, PTFE sealings, cadmium-plated steel screws	**U44**
With mounted multi-way cock made of stainless steel, PTFE sealings, stainless steel screws	**U45**
With enclosed manifold (3-fold) made of stainless steel, PTFE sealings, cadmium-plated steel screws with tube fitting 12 mm	**U50**
With enclosed manifold (3-fold) made of stainless steel, PTFE sealings, stainless steel screws with tube fitting 12 mm	**U51**
With enclosed manifold (5-fold) made of stainless steel, PTFE sealings, cadmium-plated steel screws with tube fitting 12 mm	**U52**
With enclosed manifold (5-fold) made of stainless steel, PTFE sealings, stainless steel screws with tube fitting 12 mm	**U53**
With enclosed multi-way cock made of stainless steel, PTFE sealings, cadmium-plated steel screws with tube fitting 12 mm	**U54**
With enclosed multi-way cock made of stainless steel, PTFE sealings, stainless steel screws with tube fitting 12 mm	**U55**
Application data	
ID number of the primary element according to sizing tool	**Y40**
Measuring range setting (temperature transmitter): lower range value (max. 5 characters), upper range value (max. 5 characters), unit (C, F)	**Y41**

* For further options, please refer to SITRANS P320.

Scope of delivery

- Averaging pitot tube with differential pressure connections
- Mounting part:
  - Flanged installation: Flanged mounting part including gasket, screws and nuts.
  - Cutting ring installation: Welding socket, cutting ring, nut
- If necessary: closed counter support
- Shut-off valves for remote design (options T5x selected in PIA)
- Manifold for compact/remote design (options U4x, U5x selected in PIA)

© Siemens 2020

Averaging pitot tube for steam

Application

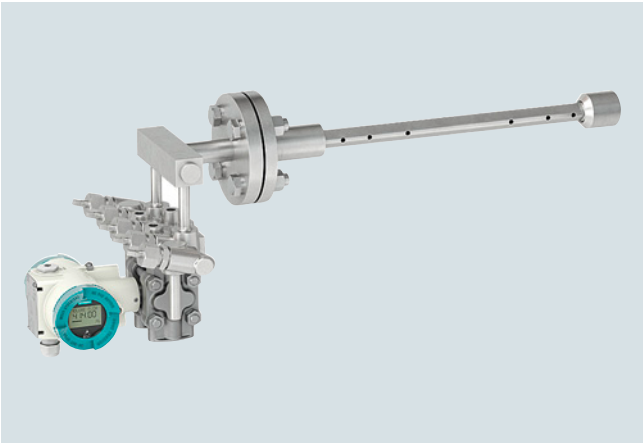

SITRANS FP330 compact design

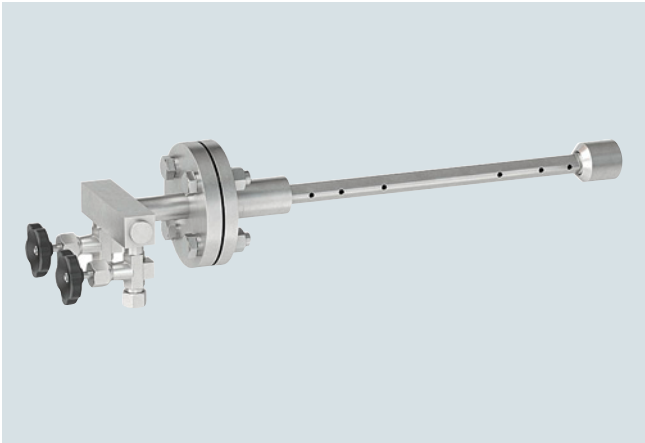

SITRANS FPS300 remote design

These sensors for steam probes are used wherever flow of superheated or saturated steam is to be measured.

Design

Mounting type

The averaging pitot tube for steam can be mounted to pipes with a traditional flange:

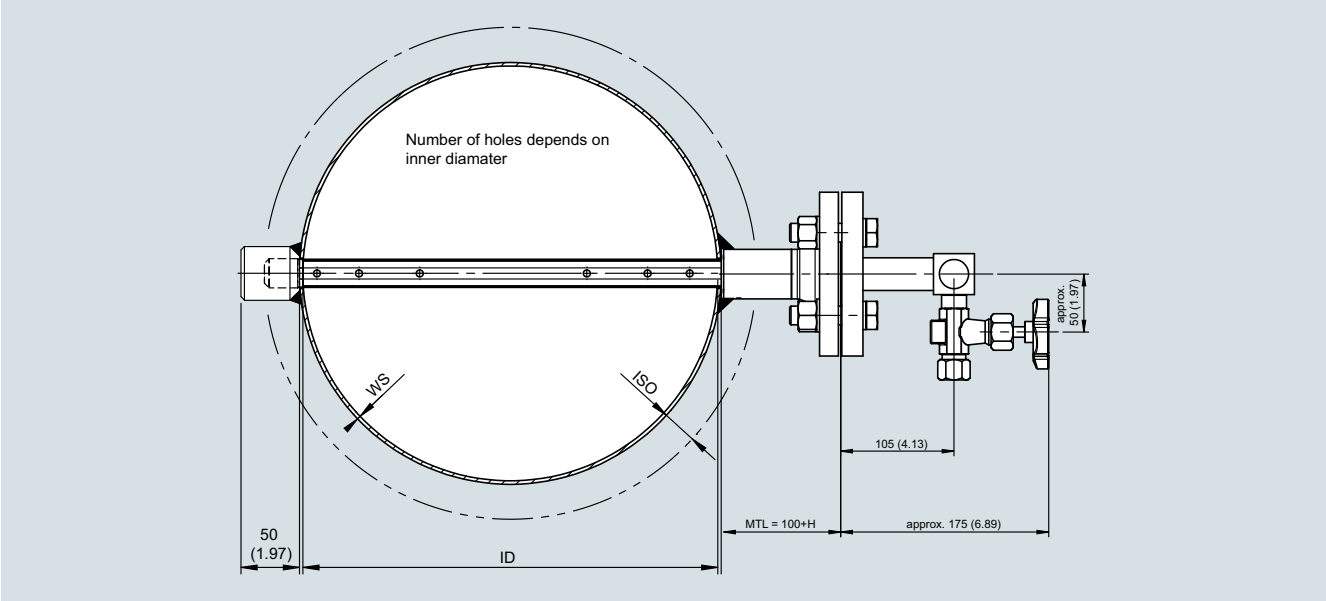

Dimensions of mounting parts

Flange	Profile 10	Profile 22	Profile 32
PN40	DN 15	DN 32	DN 40
PN100	DN 25	DN 40	DN 40
Class 150	½“	1 ¼“	1 ½“
Class 300	½“	1 ¼“	1 ½“
Class 600	1“	1 ½“	1 ½“

Standard lengths of mounting parts

Profile 10	Profile 22	Profile 32
80 mm	100 mm	100 mm

© Siemens 2020

Design (continued)

System design of differential pressure connection

The differential pressure transmitter can be installed in compact design (at the averaging pitot tube) or in remote design.

Steam applications, compact design

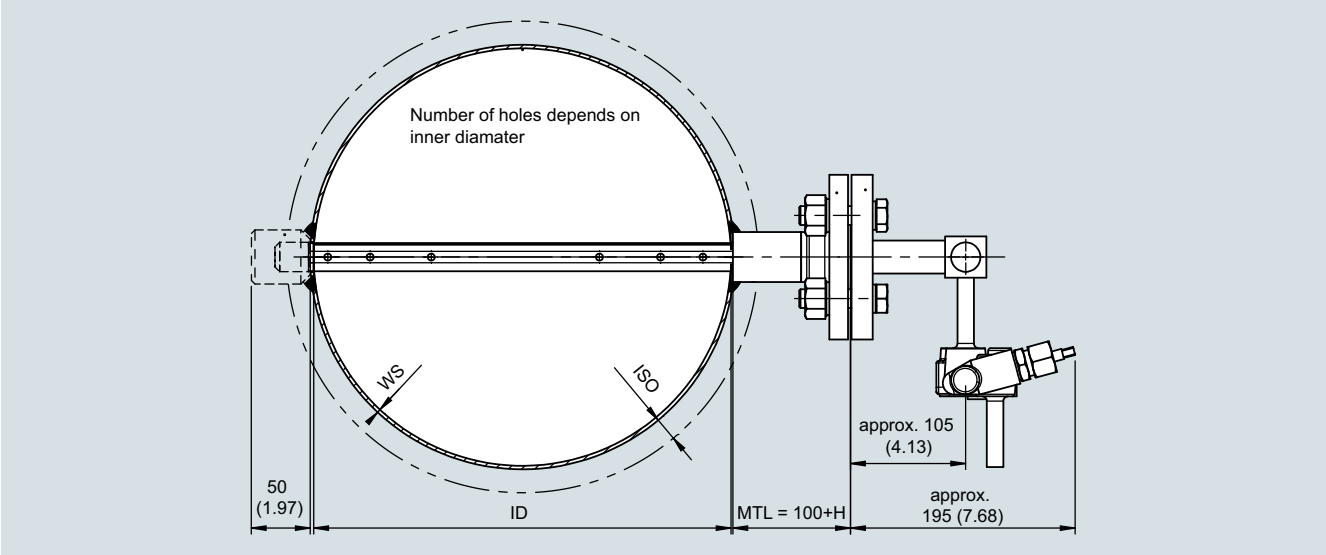

For steam applications with compact design the averaging pitot tube sensor is equipped with integrated condensation pots, a 5-way-manifold is welded directly to the sensor.

Steam applications, remote design

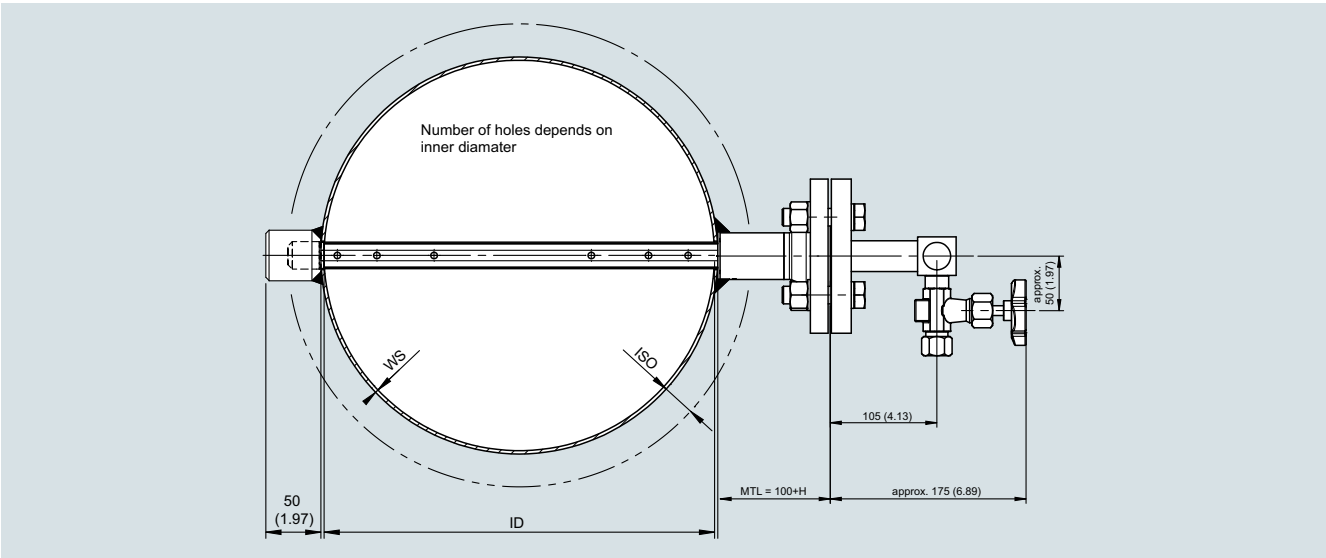

For steam applications with remote design the averaging pitot tube sensor is equipped with integrated condensation pots, valves are welded directly to the sensor. Impulse pressure piping (not supplied) has to be installed from the valves to the remote mounted manifold and differential pressure transmitter.

Profile width
- Depending on selected type

Averaging pitot tube materials
- Standard: 1.4404/316L
- Option: 16Mo3/1.5415

Mounting parts materials
- Carbon steel, 1.4404/316L

Flange gaskets
- Up to PN 40: graphite
- As of PN 63: graphite with stainless steel insert

Integrated temperature measurement using PT100
- Can be integrated in averaging pitot tube (> DN 100, only 1.4404, ≤ PN 40)

Max. pressure
- EN: up to PN 100
- ASME: up to Class 600

Max. temperature
- Mounting parts: According to EN 1092-1 or ASME B16.5
- Sensor: Will be calculated by sizing tool

© Siemens 2020

Averaging pitot tube for steam

Selection and ordering data

	Article No.											
SITRANS FP330/FPS300 averaging pitot tube for steam ↗	**7ME162**	■	-	■	■	■	**0**	-	■	■	■	■
↗ Click on the Article No. for the online configuration in the PIA Life Cycle Portal.												
Communication												
HART (4 ... 20 mA)		**0**										
Without transmitter		**8**										
Nominal size/Sensor type (according to sizing tool)												
DN 40/Sensor type 10				**1**	**C**							
DN 50/Sensor type 10				**1**	**D**							
DN 65/Sensor type 10				**1**	**E**							
DN 80/Sensor type 10				**1**	**F**							
DN 100/Sensor type 10				**1**	**G**							
DN 125/Sensor type 10				**1**	**H**							
DN 100/Sensor type 22				**2**	**G**							
DN 125/Sensor type 22				**2**	**H**							
DN 150/Sensor type 22				**2**	**J**							
DN 200/Sensor type 22				**2**	**K**							
DN 250/Sensor type 22				**2**	**L**							
DN 300/Sensor type 22				**2**	**M**							
DN 350/Sensor type 22				**2**	**N**							
DN 400/Sensor type 22				**2**	**P**							
DN 450/Sensor type 22				**2**	**Q**							
DN 500/Sensor type 22				**2**	**R**							
DN 600/Sensor type 22				**2**	**S**							
DN 700/Sensor type 22				**2**	**T**							
DN 800/Sensor type 22				**2**	**U**							
DN 900/Sensor type 22				**2**	**V**							
DN 1000/Sensor type 22				**2**	**W**							
DN 1100/Sensor type 22				**2**	**X**							
DN 1200/Sensor type 22				**2**	**Y**							
DN 300/Sensor type 32				**3**	**M**							
DN 350/Sensor type 32				**3**	**N**							
DN 400/Sensor type 32				**3**	**P**							
DN 450/Sensor type 32				**3**	**Q**							
DN 500/Sensor type 32				**3**	**R**							
DN 600/Sensor type 32				**3**	**S**							
DN 700/Sensor type 32				**3**	**T**							
DN 800/Sensor type 32				**3**	**U**							
DN 900/Sensor type 32				**3**	**V**							
DN 1000/Sensor type 32				**3**	**W**							
DN 1100/Sensor type 32				**3**	**X**							
DN 1200/Sensor type 32				**3**	**Y**							
DN 1400/Sensor type 32				**4**	**A**							
DN 1500/Sensor type 32				**4**	**B**							
DN 1600/Sensor type 32				**4**	**C**							
DN 1800/Sensor type 32				**4**	**D**							
DN 2000/Sensor type 32				**4**	**E**							
DN 500/Sensor type 50				**5**	**R**							
DN 600/Sensor type 50				**5**	**S**							
DN 700/Sensor type 50				**5**	**T**							
DN 800/Sensor type 50				**5**	**U**							
DN 900/Sensor type 50				**5**	**V**							
DN 1000/Sensor type 50				**5**	**W**							

© Siemens 2020

Selection and ordering data

	Article No.												
SITRANS FP330/FPS300 averaging pitot tube for steam	**7ME162**	■	-	■	■	■	■	**0**	-	■	■	■	■
DN 1100/Sensor type 50				**5**	**X**								
DN 1200/Sensor type 50				**5**	**Y**								
DN 1400/Sensor type 50				**6**	**A**								
DN 1500/Sensor type 50				**6**	**B**								
DN 1600/Sensor type 50				**6**	**C**								
DN 1800/Sensor type 50				**6**	**D**								
DN 2000/Sensor type 50				**6**	**E**								
Process connection/wetted parts material													
Flange EN 1092-1 Form B1, PN16/stainless steel 316L/1.4404						**C**							
Flange EN 1092-1 Form B1, PN40/stainless steel 316L/1.4404						**E**							
Flange EN 1092-1 Form B1, PN64/100/stainless steel 316L/1.4404						**F**							
Flange EN 1092-1 Form B1, PN160/stainless steel 316L/1.4404						**H**							
Flange EN 1092-1 Form B1, PN64/100/heat-resistant steel 16Mo3/1.5415						**J**							
Flange ASME B16.5, Class 150 RF/stainless steel 316L/1.4404						**Q**							
Flange ASME B16.5, Class 300 RF/stainless steel 316L/1.4404						**R**							
Flange ASME B16.5, Class 600 RF/stainless steel 316L/1.4404						**S**							
Flange ASME B16.5, Class 900 RF/stainless steel 316L/1.4404						**T**							
Flange ASME B16.5, Class 600 RF/heat-resistant steel 16Mo3/1.5415						**U**							
Material of welding parts/type of end support													
Carbon steel P235GH/without end support							**0**						
Stainless steel 316L/1.4404 / without end support							**1**						
Heat-resistant steel 16Mo3/1.5415 / without end support							**2**						
Carbon steel P235GH mounting components with closed end support							**3**						
Stainless steel 316L/1.4404 / closed end support							**4**						
Heat-resistant steel 16Mo3/1.5415 / closed end support							**5**						
Carbon steel P235GH/end support with flange							**6**						
Stainless steel 316L/1.4404 / end support with flange							**7**						
Thickness of pipe insulation													
Pipe insulation: 0 ... < 50 mm								**0**					
Pipe insulation: 500 ... < 100 mm								**1**					
Pipe insulation: 1000 ... < 150 mm								**2**					
Pipe insulation: 1500 ... < 200 mm								**3**					
System design													
Compact design for steam with or without integrated temperature measurement										**2**			
Remote design for dry gases, wet gases and liquids										**3**			
Type of protection of pressure transmitter													
No Ex/without pressure tranmitter											**A**		
Intrinsic safety											**B**		
Explosion proof											**C**		
Intrinsic safety, Explosion proof											**D**		
Dust ignition proof zone 21/22 (DIP), increased safety zone 2											**L**		
Dust ignition proof zone 20/21/22 (DIP), increased safety zone 2											**M**		
Intrinsic safety, Explosion proof, Dust ignition proof zone 21/22 (DIP), increased safety zone 2											**S**		
Intrinsic safety, Explosion proof, Dust ignition proof zone 21/22 (DIP), increased safety zone 2, class division											**T**		
Electrical connections/cable entries of pressure transmitter													
Without pressure transmitter												**A**	
2 x M20 x 1.5												**F**	
2 x 1/2-14 NPT												**M**	
Local operation/display of pressure transmitter													
Without display (closed lid)/without pressure tranmitter													**0**
With display (closed lid)													**1**
With display (lid with glass window)													**2**

© Siemens 2020

Averaging pitot tube for steam

Selection and ordering data

	Order code
*Further designs**	
Please add "**-Z**" to Article No. and specify Order code(s) and plain text.	
Certificates of primary element incl. fittings	
Inspection certificate of the primary element (EN 10204-3.1) - material of pressure-containing and wetted parts	**C52**
Factory certificate of the primary element (EN 10204-2.2) - wetted parts (MR 0175-2015)	**C54**
Dimensional record of the primary element	**C55**
Inspection certificate (DIN EN 571-1) - dye penetration test of weldings	**C56**
Hydrostatic pressure test of the primary element (EN 13480-5)	**C58**
Dimensional drawing 1:1 DWG of the primary element	**C59**
Maximum measuring span of pressure transmitter	
20 mbar (8.037 inH_2O)	**I01**
60 mbar (24.11 inH_2O)	**I02**
250 mbar (100.5 inH_2O)	**I03**
600 mbar (241.1 inH_2O)	**I04**
1600 mbar (643 inH_2O)	**I05**
Integrated temperature measurement	
Integrated temperature measurement with Pt100; cl. A; 3-wire; without head transmitter	**S01**
Integrated temperature measurement with Pt100; cl. A; 3-wire; ATEX II 1/2G Ex ia IIC T5 Ga/Gb; without head transmitter	**S02**
Integrated temperature measurement with Pt100; cl. A; 3-wire; incl. Head transmitter TH320, General Purpose (non Ex) (CE, RCM, FM, CSA) (7NG0310-0BA00-0AA0)	**S03**
Integrated temperature measurement with Pt100; cl. A; 3-wire; ATEX II 1/2G Ex ia IIC T5 Ga/Gb; incl. Head transmitter TH320, Ex i,Ex nA (ec)(Ex-Zone)/IS, NIFW, NI (Class-Div) (ATEX, IECEx, CSA, FM, NEPSI) (7NG0310-0BA00-0NA0)	**S04**
Shut-off valves	
With mounted shut-off valves DN8 made of carbon steel, up to 300 °C with tube fitting 12 mm	**T50**
With mounted shut-off valves DN8 made of stainless steel, up to 300 °C with tube fitting 12 mm	**T51**
With mounted shut off valves DN8 made of carbon steel, up to 550 °C with butt weld end 14 x 2,5 mm	**T58**
Valve manifolds for mounting on primary element	
With mounted manifold (5-fold) made of carbon steel, up to 300 °C cadmium-plated steel screws	**U46**
With mounted manifold (5-fold) made of carbon steel, up to 550 °C cadmium-plated steel screws with butt weld end 14 x 2,5 mm	**U48**
With enclosed manifold (5-fold) made of carbon steel, up to 300 °C cadmium-plated steel screws with tube fitting 12 mm	**U56**
With enclosed manifold (5-fold) made of carbon steel, up to 550 °C cadmium-plated steel screws with butt weld end 14 x 2,5 mm	**U58**
Application data	
ID number of the primary element according to sizing tool	**Y40**
Measuring range setting (temperature transmitter): lower range value (max. 5 characters), upper range value (max. 5 characters), unit (C, F)	**Y41**

* For further options, please refer to SITRANS P320.

Scope of delivery

- Averaging pitot tube with integrated condensation pots and differential pressure connections
- Flanged mounting part including gasket, screws and nuts
- If necessary: closed counter support
- Shut-off valves for remote design (options T5x selected in PIA)
- Manifold for compact/remote design (options U4x, U5x selected in PIA)

© Siemens 2020

Application

SITRANS FP330 compact design

SITRANS FPS300 remote design

In the FASTLOK version the sensor can be assembled and disassembled into the pipe without interrupting plant operation. This pitot tube is used for dry gases, wet gases and liquids. On request it is available in different pressure ratings or with an integrated gear drive.

Design

Mounting type

The averaging pitot tube with FASTLOK mechanism is mounted with a screwed ball valve. A threaded nozzle is welded to the pipe onto which the ball valve is screwed.

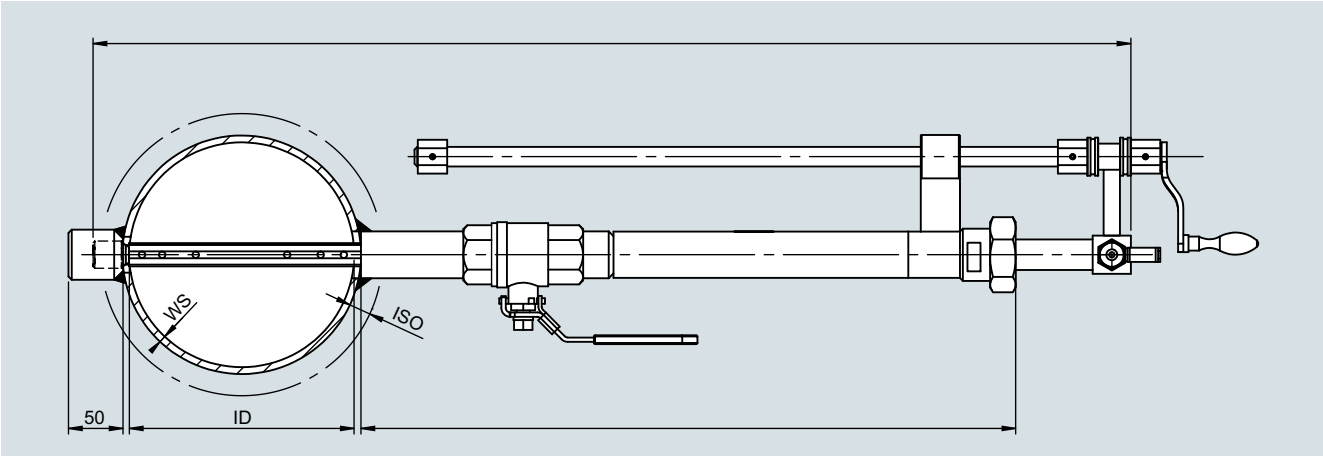

Isolation mechanism
- Ball valve with screwed-on threaded pipe with gland packing

Retraction mechanism
- The sensor is inserted or removed into/out of the pipe by turning the operating handle on top of the threaded rod. A gland packing prevents gas or liquid from exiting while the isolation ball valve is opened.

System design of differential pressure connection[1)]
- Compact, remote

Profile width
- Depending on selected type

Averaging pitot tube materials
- 1.4404/316L

Mounting parts materials
- Carbon steel, 1.4404/316L

Ball valve material
- Stainless steel 1.4404

Gasket ball valve
- PTFE

Pressure rating
- PN16

Max. temperature
- Approx. 200 °C

[1)] For details see Design under the section "Averaging pitot tube for gas and liquids" on page 3/445.

© Siemens 2020

Averaging pitot tube with FASTLOK

Selection and ordering data

	Article No.											
SITRANS FP330/FPS300 averaging pitot tube with FASTLOK ↗	**7ME163**	■	-	■	■	■	■	-	■	■	■	■
↗ Click on the Article No. for the online configuration in the PIA Life Cycle Portal.												
Communication												
HART (4 ... 20 mA)		**0**										
Without transmitter		**8**										
Nominal size/Sensor type (according to sizing tool)												
DN 40/Sensor type 10				**1**	**C**							
DN 50/Sensor type 10				**1**	**D**							
DN 65/Sensor type 10				**1**	**E**							
DN 80/Sensor type 10				**1**	**F**							
DN 100/Sensor type 10				**1**	**G**							
DN 125/Sensor type 10				**1**	**H**							
DN 100/Sensor type 22				**2**	**G**							
DN 125/Sensor type 22				**2**	**H**							
DN 150/Sensor type 22				**2**	**J**							
DN 200/Sensor type 22				**2**	**K**							
DN 250/Sensor type 22				**2**	**L**							
DN 300/Sensor type 22				**2**	**M**							
DN 350/Sensor type 22				**2**	**N**							
DN 400/Sensor type 22				**2**	**P**							
DN 450/Sensor type 22				**2**	**Q**							
DN 500/Sensor type 22				**2**	**R**							
DN 600/Sensor type 22				**2**	**S**							
DN 700/Sensor type 22				**2**	**T**							
DN 800/Sensor type 22				**2**	**U**							
DN 900/Sensor type 22				**2**	**V**							
DN 1000/Sensor type 22				**2**	**W**							
DN 1100/Sensor type 22				**2**	**X**							
DN 1200/Sensor type 22				**2**	**Y**							
DN 300/Sensor type 32				**3**	**M**							
DN 350/Sensor type 32				**3**	**N**							
DN 400/Sensor type 32				**3**	**P**							
DN 450/Sensor type 32				**3**	**Q**							
DN 500/Sensor type 32				**3**	**R**							
DN 600/Sensor type 32				**3**	**S**							
DN 700/Sensor type 32				**3**	**T**							
DN 800/Sensor type 32				**3**	**U**							
DN 900/Sensor type 32				**3**	**V**							
DN 1000/Sensor type 32				**3**	**W**							
DN 1100/Sensor type 32				**3**	**X**							
DN 1200/Sensor type 32				**3**	**Y**							
DN 1400/Sensor type 32				**4**	**A**							
DN 1500/Sensor type 32				**4**	**B**							
DN 1600/Sensor type 32				**4**	**C**							
DN 1800/Sensor type 32				**4**	**D**							
DN 2000/Sensor type 32				**4**	**E**							
DN 500/Sensor type 50				**5**	**R**							
DN 600/Sensor type 50				**5**	**S**							
DN 700/Sensor type 50				**5**	**T**							
DN 800/Sensor type 50				**5**	**U**							
DN 900/Sensor type 50				**5**	**V**							
DN 1000/Sensor type 50				**5**	**W**							

© Siemens 2020

Selection and ordering data

	Article No.												
SITRANS FP330/FPS300 averaging pitot tube with FASTLOK	**7ME163**	■	-	■	■	■	■	-	■	■	■	■
DN 1100/Sensor type 50				**5**	**X**							
DN 1200/Sensor type 50				**5**	**Y**							
DN 1400/Sensor type 50				**6**	**A**							
DN 1500/Sensor type 50				**6**	**B**							
DN 1600/Sensor type 50				**6**	**C**							
DN 1800/Sensor type 50				**6**	**D**							
DN 2000/Sensor type 50				**6**	**E**							
Process connection/wetted parts material												
Cutting ring PN40/stainless steel 316L/1.4404						**N**						
Material of welding parts/type of end support												
Carbon steel P235GH/without end support							**0**					
Stainless steel 316L/1.4404 / without end support							**1**					
Carbon steel P235GH mounting components with closed end support							**3**					
Stainless steel 316L/1.4404 / closed end support							**4**					
Thickness of pipe insulation												
Pipe insulation: 0 ... < 50 mm								**0**				
Pipe insulation: 500 ... < 100 mm								**1**				
Pipe insulation: 1000 ... < 150 mm								**2**				
Pipe insulation: 1500 ... < 200 mm								**3**				
System design												
Compact design for dry gases and liquids without integrated temperature measurement									**0**			
Compact design for wet gases with or without integrated temperature measurement as well as for dry gases and liquids with integrated temperature measurement									**1**			
Remote design for dry gases, wet gases and liquids									**3**			
Type of protection of pressure transmitter												
No Ex/without pressure tranmitter										**A**		
Intrinsic safety										**B**		
Explosion proof										**C**		
Intrinsic safety, Explosion proof										**D**		
Dust ignition proof zone 21/22 (DIP), increased safety zone 2										**L**		
Dust ignition proof zone 20/21/22 (DIP), increased safety zone 2										**M**		
Intrinsic safety, Explosion proof, Dust ignition proof zone 21/22 (DIP), increased safety zone 2										**S**		
Intrinsic safety, Explosion proof, Dust ignition proof zone 21/22 (DIP), increased safety zone 2, class division										**T**		
Electrical connections/cable entries of pressure transmitter												
Without pressure transmitter											**A**	
2 x M20 x 1.5											**F**	
2 x 1/2-14 NPT											**M**	
Local operation/display of pressure transmitter												
Without display (closed lid)/without pressure tranmitter												**0**
With display (closed lid)												**1**
With display (lid with glass window)												**2**

3

© Siemens 2020

Averaging pitot tube with FASTLOK

Selection and ordering data

	Order code
*Further designs**	
Please add "**-Z**" to Article No. and specify Order code(s) and plain text.	
Certificates of primary element incl. fittings	
Inspection certificate of the primary element (EN 10204-3.1) - material of pressure-containing and wetted parts	**C52**
Factory certificate of the primary element (EN 10204-2.2) - wetted parts (MR 0175-2015)	**C54**
Dimensional record of the primary element	**C55**
Dimensional drawing 1:1 DWG of the primary element	**C59**
Maximum measuring span of pressure transmitter	
20 mbar (8.037 inH_2O)	**I01**
60 mbar (24.11 inH_2O)	**I02**
250 mbar (100.5 inH_2O)	**I03**
600 mbar (241.1 inH_2O)	**I04**
1600 mbar (643 inH_2O)	**I05**
Shut-off valves	
With mounted shut-off valves DN8 made of carbon steel, up to 300 °C with tube fitting 12 mm	**T50**
With mounted shut-off valves DN8 made of stainless steel, up to 300 °C with tube fitting 12 mm	**T51**
With mounted ball valve made of stainless steel, up to 200 °C with tube fitting 12 mm	**T59**
Valve manifolds for mounting on primary element	
With mounted manifold (3-fold) made of stainless steel, PTFE sealings, cadmium-plated steel screws	**U40**
With mounted manifold (3-fold) made of stainless steel, PTFE sealings, stainless steel screws	**U41**
With mounted manifold (5-fold) made of stainless steel, PTFE sealings, cadmium-plated steel screws	**U42**
With mounted manifold (5-fold) made of stainless steel, PTFE sealings, stainless steel screws	**U43**
With mounted multi-way cock made of stainless steel, PTFE sealings, cadmium-plated steel screws	**U44**
With mounted multi-way cock made of stainless steel, PTFE sealings, stainless steel screws	**U45**
With enclosed manifold (3-fold) made of stainless steel, PTFE sealings, cadmium-plated steel screws with tube fitting 12 mm	**U50**
With enclosed manifold (3-fold) made of stainless steel, PTFE sealings, stainless steel screws with tube fitting 12 mm	**U51**
With enclosed manifold (5-fold) made of stainless steel, PTFE sealings, cadmium-plated steel screws with tube fitting 12 mm	**U52**
With enclosed manifold (5-fold) made of stainless steel, PTFE sealings, stainless steel screws with tube fitting 12 mm	**U53**
With enclosed multi-way cock made of stainless steel, PTFE sealings, cadmium-plated steel screws with tube fitting 12 mm	**U54**
With enclosed multi-way cock made of stainless steel, PTFE sealings, stainless steel screws with tube fitting 12 mm	**U55**
Application data	
ID number of the primary element according to sizing tool	**Y40**

* For further options, please refer to SITRANS P320.

Scope of delivery

- Averaging pitot tube with removal mechanism, packing gland, differential pressure connection
- Mounting part threaded welding socket with isolation ball valve
- If necessary: closed counter support
- Shut-off valves for remote design (options T5x selected in PIA)
- Manifold for compact/remote design (options U4x, U5x selected in PIA)

© Siemens 2020

4/2 Product overview
4/2 Level Measurement Selector

4/9 Point level measurement
4/9 RF Capacitance switches
4/11 - Pointek CLS100
4/17 - Pointek CLS200 - Standard
4/33 - Pointek CLS200 - Digital
4/49 - Pointek CLS300 - Standard
4/63 - Pointek CLS300 - Digital
4/78 Vibrating switches
4/78 - SITRANS LVL100
4/85 - SITRANS LVL200
4/111 - SITRANS LVS100
4/115 - SITRANS LVS200
4/125 - SITRANS LVS300
4/133 Rotation paddle switches
4/133 - SITRANS LPS200
4/145 Ultrasonic non-contacting switch
4/145 Pointek ULS200

4/149 Continuous level measurement
4/149 Controllers
4/150 - SITRANS LT500
4/155 - SITRANS LUT400 series
4/163 - MultiRanger 200 HMI
4/168 - MultiRanger 100/200
4/172 - HydroRanger 200 HMI
4/176 - HydroRanger 200
4/180 Ultrasonic
4/182 Ultrasonic transmitters
4/182 - SITRANS LU150
4/187 - SITRANS LU180
4/192 - SITRANS Probe LU
4/197 - SITRANS Probe LU240
4/203 - The Probe
4/206 Ultrasonic transducers
4/207 - ST-H
4/210 - EchoMax XRS-5
4/214 - EchoMax XPS

4/222 Continuous level measurement (continued)
4/222 Accessories for level sensors
4/222 - EA aiming devices
4/224 - FMS mounting brackets
4/226 - TS-3 temperature sensor
4/228 Radar level transmitters
4/232 - SITRANS Probe LR
4/236 - SITRANS LR100
4/238 - SITRANS LR110
4/241 - SITRANS LR120
4/244 - SITRANS LR140
4/246 - SITRANS LR150
4/249 - SITRANS LR200
4/263 - SITRANS LR250 Horn Antenna
4/274 - SITRANS LR250 Polypropylene Lens Antenna
4/283 - SITRANS LR250 Flanged Encapsulated Antenna
4/293 - SITRANS LR250 Hygienic Encapsulated Antenna
4/319 - SITRANS LR460
4/325 - SITRANS LR560
4/331 Guided wave radar transmitters
4/332 - SITRANS LG series
4/375 Capacitance transmitters
4/375 - SITRANS LC300

4/390 Communication
4/390 SmartLinx module

You can download all instructions, catalogs and certificates for SITRANS L free of charge: www.siemens.com/level

© Siemens 2020

Overview

	Application	Device description	Page	Programming Software
Point level measurement - RF Capacitance switches				
	Powerful range of level switches suitable for a variety of industries.	**Pointek CLS100/CLS200/CLS300**		
		• CLS100: compact 2-wire inverse frequency shift capacitance switch for level detection in constricted spaces, interfaces, solids, liquids, slurries, and foam.	**4/11**	-
		• CLS200: a versatile inverse frequency shift capacitance level switch with optional rod/cable choices and configurable output, ideal for detection of liquids, solids, slurries, foam, and interfaces; digital version (with PROFIBUS PA) includes a display and provides additional diagnostic features. Functional Safety (SIL 2). Device suitable for use in accordance with IEC 61508 and IEC 61511.	**4/17**	SIMATIC PDM
		• CLS300: inverse frequency shift capacitance level switch with optional rod/cable choices and configurable output. It is ideal for detecting liquids, solids, slurries, foam and interfaces in demanding conditions where high pressure and temperatures are present; digital version (with PROFIBUS PA) includes a display and provides additional diagnostic features.	**4/49**	SIMATIC PDM
Point level measurement - Vibrating switches				
	Reliable vibrating point level switches for liquid and slurry applications across all industries.	**SITRANS LVL100/LVL200**		
		• LVL100: compact vibrating level switch for use in liquid and slurry applications such as overflow, high, low, and demand level applications. Also ideal for dry run protection.	**4/78**	-
		• LVL200: advanced vibrating level switch for use in liquid and slurry applications. Suited for most hazardous area applications such as: overflow, high, low, demand, and dry run protection. Functional Safety (SIL 2). Device suitable for use in accordance with IEC 61508 and IEC 61511.	**4/85**	-
	Reliable vibrating point level switches for bulk solids in a wide variety of applications.	**SITRANS LVS100/LVS200/LVS300**		
		• LVS100: vibrating point level switch designed to be impervious to external vibrations and to provide reliable performance in demanding bulk solids applications.	**4/111**	-
		• LVS200: vibrating point level switch designed to be impervious to external vibrations and to provide reliable performance in demanding bulk solids applications.	**4/115**	-
		• LVS300: vibrating rod point level switch for high, low, or demand level detection of bulk solids. Durable probe, ideal for larger granule sizes.	**4/125**	
Point level measurement - Rotating paddle switches				
	Reliable rotating point level switches for bulk solids in a wide variety of applications.	**SITRANS LPS200** • Rotating paddle switch for detection of high, low, and demand levels in a wide variety of bulk solids industries. Unique engineering provides long-lasting, reliable performance. • Functional Safety (SIL 2). Device suitable for use in accordance with IEC 61508 and IEC 61511.	**4/133**	-
Point level measurement - Ultrasonic switch				
	Ultrasonic non-contacting switch with two switch points for level detection of bulk solids, liquids and slurries in a wide variety of industries.	**Pointek ULS200** • Rugged design, no moving parts, and virtually maintenance-free. • Transducer available in ETFE or PVDF copolymer and therefore inert to most chemicals.	**4/145**	-

© Siemens 2020

Overview

	Application	Device description	Page	Programming Software
Continuous level measurement - Controllers				
	SITRANS LT500 is a versatile, single and multi-vessel level monitor/controller for virtually any application in a wide range of industries.	**SITRANS LT500** • Level, volume, and flow measurements in open channels, differential control, extended pump control, and alarm functions. • Easy to use HMI display with local four-button programming, menu-driven parameters, and wizard support for key applications.	**4/150**	-
	The SITRANS LUT400 series controllers are compact, single point, long-range ultrasonic controllers for continuous level or volume measurement of liquids, slurries, and solids, and high accuracy monitoring of open channel flow.	**SITRANS LUT420/430/440** In addition to industry leading 1 mm (0.04 inch) accuracy, each of the three models in the series are compatible with our full range of EchoMax transducers and offer varying degrees of pump, alarm, and other control functionality, all from a very compact and easy-to-use interface. • 1 mm accuracy. • HART communications. • Next Generation Sonic Intelligence.	**4/155**	SIMATIC PDM
	Versatile short- to medium-range ultrasonic single- and dual-vessel level controller for virtually any application in a wide range of industries.	**MultiRanger 100/200** • Using non-contacting ultrasonic technology, the controller measures the level in short to medium range applications up to 15 m (50 ft) of solids, liquids, or slurries • Auto False-Echo Suppression of false echoes	**4/168**	SIMATIC PDM
	Ultrasonic level controller for up to six pumps - control, differential control, and open channel flow monitoring.	**HydroRanger 200** • An economical, low-maintenance solution delivering control efficiency and productivity needed to meet today's exacting standards • Auto False-Echo Suppression of false echoes	**4/172**	SIMATIC PDM

© Siemens 2020

Overview

	Application	Device description	Page	Programming Software
Continuous level measurement - Ultrasonic transmitters				
	SITRANS LU150 and LU180 are short-range integrated ultrasonic level transmitters. These 2-wire, 4 to 20 mA loop powered transmitter are ideal for liquids, slurries, and bulk materials in open or closed vessels to 5 m (16.4 ft).	**SITRANS LU150** • LU150 is approved for general purpose applications. • Easy to install, program, and maintain. • Patented Sonic Intelligence echo processing. **SITRANS LU180** • LU180 is approved for intrinsically safe applications. • Easy to install, program, and maintain. • Patented Sonic Intelligence echo processing.	**4/182** **4/187**	- -
	2-wire loop powered ultrasonic transmitter for level, volume, and flow monitoring of liquids in open channels, storage vessels and simple process vessels.	**SITRANS Probe LU** • Continuous level measurement up to 12 m (40 ft) range. • Sonic Intelligence signal processing. • Auto False-Echo Suppression.	**4/192**	SIMATIC PDM
	Ultrasonic level transmitter with HART, 4 to 20 mA is ideal for level, volume, and volume flow measurements. It works with liquids, slurries, and bulk materials up to 12 meters (40 feet).	**SITRANS Probe LU240** • Continuous level measurement up to 12 m (40 ft) range. • Next generation Process Intelligence signal processing. • Auto False-Echo Suppression for fixed obstruction avoidance. • Fast and easy configuration with quick start wizards.	**4/197**	SIMATIC PDM
	Compact level transmitter with integrated transducer for accurate level measurement of liquid applications.	**The Probe** • A short-range integrated ultrasonic level transmitter, ideal for liquids and slurries in open or closed vessels. • 3 wire system with mA output and alarm relay.	**4/203**	-
Continuous level measurement - Ultrasonic transducers				
	ST-H: ETFE or PVDF transducer for chemicals XRS-5: Standard transducer for applications to 8 m (26 ft)	**ST-H/EchoMax XRS-5** • ST-H: the narrow design of the ST-H allows the sensor to be mounted using a 2 inch connection • XRS-5: narrow beam angle of only 10°, measuring range maximum 8 m (26 ft) for measurement of liquids, solids, and slurries	**4/207** **4/210**	- -
	Transducers for liquids and bulk solids XPS series: Hermetically sealed PVDF enclosure for chemical immunity	**EchoMax XPS** • XPS series offers versions for various distances up to 30 m (100 ft) and up to a maximum temperature of 95 °C (203 °F)	**4/214**	-

© Siemens 2020

Overview

	Application	Device description	Page	Programming Software
Continuous level measurement - Radar transmitters				
	2-wire, 6 GHz pulse radar level transmitter for continuous monitoring of liquids and slurries in storage vessels with nominal pressure and temperature, to a range of 20 m (66 ft).	**SITRANS Probe LR** • Uni-Construction polypropylene rod antenna standard • Process Intelligence signal processing • Auto False-Echo Suppression of false echoes	**4/232**	SIMATIC PDM
	SITRANS LR100: a compact radar transmitter for continuous level measurement of liquids and slurries to a range of 8 m (26 ft). SITRANS LR110: a compact radar transmitter for continuous level measurement of liquids, slurries, or solids to a range of 15 m (49.2 ft).	**SITRANS LR100** • Bluetooth connectivity for easy setup with SITRANS mobile IQ • Chemically resistant PVDF enclosure • W band FMCW radar yields narrow beam with small antenna for superior performance in short range applications • 5 mm accuracy **SITRANS LR110** • Bluetooth connectivity for easy setup with SITRANS mobile IQ • Chemically resistant PVDF enclosure • W band FMCW radar yields narrow beam with small antenna for superior performance in short range applications • HART 7.0 or Modbus RTU communication for intelligent integration into your application • 2 mm accuracy and zero near range distance yields optimum inventory management capability	**4/236** **4/238**	
	Compact radar transmitter for continuous level measurement of liquids and solids to a range of 30 m (98.4 ft).	**SITRANS LR120** • Bluetooth connectivity for easy setup with SITRANS mobile IQ • Chemically resistant PVDF enclosure • W band FMCW radar yields narrow beam with small antenna for superior performance in short range applications • HART 7.0 or Modbus RTU (in preparation) communication for intelligent integration into your application • Submergence shield accessory prevents build up on sensor during flooding conditions • 2 mm accuracy and zero near range distance yields optimum inventory management capability	**4/241**	
	SITRANS LR140: a 2 wire loop powered radar transmitter for continuous level measurement of liquids and slurries to a range of 8 m (26 ft). SITRANS LR150: a compact radar transmitter for continuous level measurement of liquids, slurries, and solids to a range of 15 m (49.2 ft), with optional HMI.	**SITRANS LR140** • Bluetooth connectivity for easy setup with SITRANS mobile IQ. • Chemically resistant PVDF sensor. • W band FMCW radar yields narrow beam with small antenna for superior performance in short range applications. **SITRANS LR150** • Bluetooth connectivity for easy setup with SITRANS mobile IQ. • Optional HMI with pushbutton programming and local diagnostic data. • Chemically resistant PVDF sensor. • W band FMCW radar yields narrow beam with small antenna for superior performance in short range applications.	**4/244** **4/246**	
	2-wire, 6 GHz pulse radar level transmitter for continuous monitoring of liquids and slurries in storage and process vessels including high temperature and pressure, to a range of 20 m (66 ft).	**SITRANS LR200** • Program without opening the lid, even in hazardous areas, using patented infrared IS handheld programmer • Special Uni-Construction hermetically sealed polypropylene rod antenna has integrated threaded connection • Built-in alphanumeric display with support in four languages	**4/249**	SIMATIC PDM AMS SITRANS DTM

© Siemens 2020

Level Measurement Selector

Overview

	Application	Device description	Page	Programming Software
	2-wire, 25 GHz pulse radar level transmitter for continuous monitoring of liquids and slurries in storage and process vessels including high temperature and pressure, to a range of 20 m (66 ft); antenna designs ideal for small vessels, low dielectric media, food & beverages and corrosive/aggressive media.	**SITRANS LR250** • Simple operation using the graphical local user interface (LUI) • Plug-and-play setup using the intuitive Quick Start Wizard • 25 GHz high frequency allows for small horn antennas and easy mounting in nozzles • Process Intelligence signal processing for improved measurement reliability and Auto False-Echo Suppression of fixed obstructions	**4/263**	SIMATIC PDM AMS SITRANS DTM
	4-wire, 24 GHz FMCW radar level transmitter with extremely high signal-to-noise ratio and advanced signal processing for continuous monitoring of solids up to 100 m (328 ft); ideal for measurement in extreme dust and high temperature applications	**SITRANS LR460** • Process Intelligence for advanced signal processing and quick and easy adjustment • Self-guided Quick Start Wizard for plug and play startup • 100 m (328 ft) range for long-range and difficult applications	**4/319**	SIMATIC PDM
	2-wire, 78 GHz FMCW radar level transmitter for continuous monitoring of solids and liquids to a range of 100 m (328 ft); easy to install, plug and play, virtually no maintenance	**SITRANS LR560** • Rugged stainless steel design • 78 GHz high frequency provides very narrow beam, virtually no mounting nozzle noise, and optimal reflection from sloped solids • Aimer option to direct beam to area of interest, such as draw point of cone • Air purge connection is included for self-cleaning of extremely sticky solids • Lens antenna is highly resistant to product buildup • Local display interface (LDI) allows local programming and diagnostics	**4/325**	SIMATIC PDM AMS SITRANS DTM
Continuous level measurement - Guided wave radar transmitters				
	Guided wave radar transmitters for short- and medium-range level, level/interface, and volume measurement of liquids, slurries, and solids. The four LG models are unaffected by changes in process conditions, high temperatures and pressures, and provide a wide range of hygienic options.	**SITRANS LG240/250/260/270** • Measures accurately on materials with dielectric (dK) as low as 1.4 • Guided wave radar measurement for up to 2 mm (0.08 inch) accuracy • Measures level, level/interface, and volume of solids, slurries, and liquids • 4 button programming for quick setup • Reliable level measurement on harsh applications with pressure up to 400 bar g (40 000 kPa) and temperatures as high as 450 °C (842 °F)	**4/332**	SIMATIC PDM SITRANS DTM
Continuous level measurement - Capacitance transmitters				
	For liquids and solids applications, ideal for standard industrial applications in chemical, hydrocarbon processing, food and beverage, and mining, aggregate and cement industries.	**SITRANS LC300** • Sophisticated, but easy-to-adjust microprocessor combined with field-proven probes • Active shield technology ensures measurements are unaffected by vapors, product deposits, dust, and condensation	**4/375**	-
Communications				
		SmartLinx Module • Optional communication modules, SmartLinx, provide direct digital connection to popular industrial fieldbus systems	**4/390**	-

© Siemens 2020

Overview

Continuous Level						
Conditions	**Ultrasonic**	**Radar**	**Guided Wave Radar**	**Capacitance**	**Gravimetric**	**Hydrostatic pressure**
Measurement						
Level	■	■	■	■	◆	■
Interface (liquid/liquid)			■	◆		■
Interface (liquid/solid)	◆			◆		
Volume	■	■	■	◆	◆	■
Mass					■	■
Flow (open channel)	■	◆				
Level Applications						
Changing density	■	■	■	■		
Changing dielectric	■	■	■	◆	■	■
Aggressive chemicals	■	■	■	■	■	■
Pressure/vacuum		■	■	■	■	■
High temperature		■	■	■	■	■
Cryogenic			■		■	
Turbulence	■	■	◆	◆	■	■
Steam		◆	■	◆	■	■
Hydrocarbon vapors/solvents		■	■	■	■	■
Foam	◆	◆	◆	◆	■	■
Buildup	◆	◆	◆	◆	■	◆
High viscosity	■	■	◆	◆	■	◆
Dust	◆	■	■	■	■	
Solids powders	◆	■	◆	◆	■	
Solids granules/pellets < 25 mm (1 inch)	■	■	◆	◆	■	
Solids > 25 mm (1 inch)	■	■			■	
High angle of repose	◆	■	■	◆	■	

■ preferred

◆ condition dependent

© Siemens 2020

Overview

Point Level				
Conditions	**Vibration**	**Capacitance**	**Paddle**	**Ultrasonic**
Measurement				
Level	■	■	■	■
Interface (liquid/liquid)		■		
Interface (liquid/solid)	◆			
Volume				
Mass				
Flow (open channel)				
Level Applications				
Changing density	■	■	■	■
Changing dielectric	■	◆	■	■
Aggressive chemicals	■	■	◆	■
Pressure/vacuum	■	■	■	
High temperature	■	■	■	
Cryogenic	■			
Turbulence	◆	◆		■
Steam	■	◆	■	
Hydrocarbon vapors/solvents	■	◆		
Foam	◆	◆		◆
Buildup	◆	◆	■	◆
High viscosity	◆	◆	◆	■
Dust	■	■	■	◆
Solids powders	■	◆	■	◆
Solids granules/pellets < 25 mm (1 inch)	■	◆	■	■
Solids > 25 mm (1 inch)	◆	◆	■	■
High angle of repose	■	■	■	◆

■ preferred

◆ condition dependent

© Siemens 2020

Overview

Introduction

Inverse frequency shift capacitance point level and material detection switches are designed to withstand the harsh environments of high pressure and high temperature applications.

Inverse Frequency Technology

Siemens inverse frequency shift capacitance devices incorporate a unique frequency-based approach to level measurement. The capacitance units monitor the effect of capacitance based on frequency change. The relationship between capacitance and frequency is inverse. Because small level changes result in a large frequency change, the result is excellent resolution and accuracy.

Principle of Operation

Inverse frequency shift capacitance devices require two components: a reference electrode of a variable capacitor and the measurement electrode. In capacitive level measurement, the environment (typically the vessel wall) acts as the reference electrode, while the probe supplies the measurement electrode. The dielectric is composed of the vessel contents and, if the measurement electrode is insulated, the insulating layer.

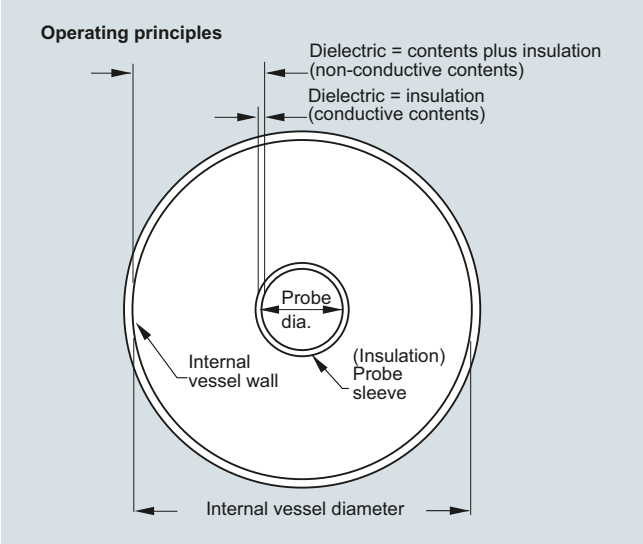

Inverse frequency shift capacitance operation

Capacitance is affected by the surface area of the electrodes, the separation distance between the electrodes and the dielectric constant of the vessel contents. The dielectric constant is the measure of a material's ability to store energy. The relative dielectric constant of air (vacuum) is 1; all other materials have a higher value.

Mode of operation

Common Terms

Capacitance

The property of a system of conductors and dielectrics that permits the storage of electricity when a potential difference exists between the conductors. Its value is expressed as the ratio of a quantity of electricity to a potential difference and the unit is a Farad.

Capacitor

A device in a circuit that has the potential to store an electric charge. Typically a capacitor has two conductors or electrodes separated by a layer of a non-conducting material called a dielectric. With the conductors on opposite sides of the dielectric layer oppositely charged by a source of voltage, the electrical energy of the charged system is stored in the polarized dielectric.

Dielectric constant

The ability of a dielectric to store electrical potential energy under the influence of an electric field. This is measured by a ratio which compares the capacitance of a condenser with the material as dielectric to its capacitance with a vacuum/dry air as dielectric: the dielectric constant of air is 1.

Active shield

The portion of the probe isolated from the active measurement section. The sensor signal is connected to the active shield portion of the probe, eliminating the electrical potential difference between the shield and the measurement section. So, the shield portion of the probe near the process connection is not affected by changes in vapor concentration, material buildup, dust, or condensation.

© Siemens 2020

Technical specifications

Point Level Measurement			
Criteria	**Pointek CLS100**	**Pointek CLS200**	**Pointek CLS300**
Typical applications	Liquids, slurries, powders, granules, applications in constricted spaces	Liquids, slurries, powders, granules, foam, food, and pharmaceuticals, - petrochemicals	Liquids, slurries, powders, granules, relatively high pressure, and temperature, hazardous areas
Max. length including sensor	100 mm (4 inch)	Rod: 5.5 m (18 ft) Cable: up to 30 m (98 ft)	Rod: 1 m (40 inch) Cable: 25 m (82 ft)
Process temperature (Temperature ratings are pressure dependent. See Pressure/Temperature curves for respective product.)	• Stainless steel process connection: -30 ... +100 °C (22 ... +212 °F) • Fully Synthetic (PPS process connection): -10 ... +100 °C (14 ... 212 °F)	• -40 ... +85 °C (-40 ... +185 °F) • With thermal isolator: -40 ... +125 °C (-40 ... +257 °F)	• -40 ... +200 °C (-40 ... +392 °F) • HT version: -40 ... +400 °C (-40 ... +752 °F)
Process pressure (Pressure ratings are temperature dependent. See Pressure/Temperature curves for respective product.)	Up to 10 bar g (146 psi g)	• Rod versions: Up to 25 bar g (365 psi g) • Cable version: Up to 10 bar g (146 psi g)	Up to 35 bar g (511 psi g)
Output	Stainless steel cable or enclosure version: • 4 ... 20/20 ... 4 mA, 2-wire current loop • Solid-state output Fully-synthetic version (PPS) • Relay output	Standard: • 1 SPDT Form C relay, solid-state switch Digital: • Solid-state switch included	Standard: • 1 SPDT Form C relay, solid-state switch Digital: • Solid-state switch included
Communications		Standard: • 3 LED indicators Digital: • PROFIBUS PA; SIMATIC PDM compatible	Standard: • 3 LED indicators Digital: • PROFIBUS PA; SIMATIC PDM compatible
Power Specifications	Standard: • 12 ... 33 V DC Intrinsically Safe (Stainless steel version only): • 10 ... 30 V DC	Standard: • 12 ... 250 V AC/DC, 0 ... 60 Hz, 2 W max. Digital: • Bus voltage: 12 ... 30 V DC, IS version: 12 ... 24 V DC • Current consumption: 12.5 mA	Standard: • 12 ... 250 V AC/DC, 0 ... 60 Hz, 2 W max. Digital: • Bus voltage: 12 ... 30 V DC, IS version: 12 ... 24 V DC • Current consumption: 12.5 mA
Approvals	Stainless steel cable or enclosure version: CE, CSA, FM, ATEX, RCM, Lloyds Register, WHG Fully-synthetic version (PPS): CSA, FM	CSA, FM, CE, ATEX, RCM, Lloyds Register, WHG, Vlarem II	CSA, FM, CE, ATEX, RCM, Lloyds Register, WHG, Vlarem II

© Siemens 2020

Overview

Pointek CLS100 is a compact, 2-wire, inverse frequency shift capacitance switch for level and material detection in constricted spaces, interfaces, solids, liquids, slurries, and foam; with the ability to tune out buildup on probe.

Benefits

- Easy installation with verification by built-in LED
- Low maintenance with no moving parts
- Sensitivity adjustment
- Integrated cable or PBT enclosure versions available
- Intrinsically Safe, Dust Ignition Proof, and General Purpose options available

Application

Pointek CLS100's short insertion length of 100 mm (4 inch) and versatility in various applications and in vessels or pipes makes it a good replacement for traditional capacitance sensors.

Its advanced tip-sensing technology provides accurate, repeatable switchpoint performance. The PPS (Polyphenylene sulfide) probe [optional PVDF (Polyvinylidene Fluoride)] is chemically resistant with an effective process operating temperature range from -30 to +100 °C (-22 to +212 °F) (7ML5501), and -10 to +100 °C (14 to 212 °F) (7ML5610). The fully potted design ensures reliability in a vibrating environment such as agitated tanks up to 4 g. When used with a SensGuard protection cover, the CLS100 is protected from shearing, impact, and abrasion in tough primary processes.

The Pointek CLS100 is available in three versions. The integral cable version has a stainless steel process connection and probe options of PPS or PVDF. The fully synthetic version has a thermoplastic polyester enclosure with a PPS process connection combined with a PPS probe. The standard enclosure version has a thermoplastic polyester enclosure with a stainless steel process connection in combination with a PPS or PVDF probe.

- Key Applications: liquids, slurries, powders, granules, food and pharmaceuticals, chemicals, hazardous areas

Configuration

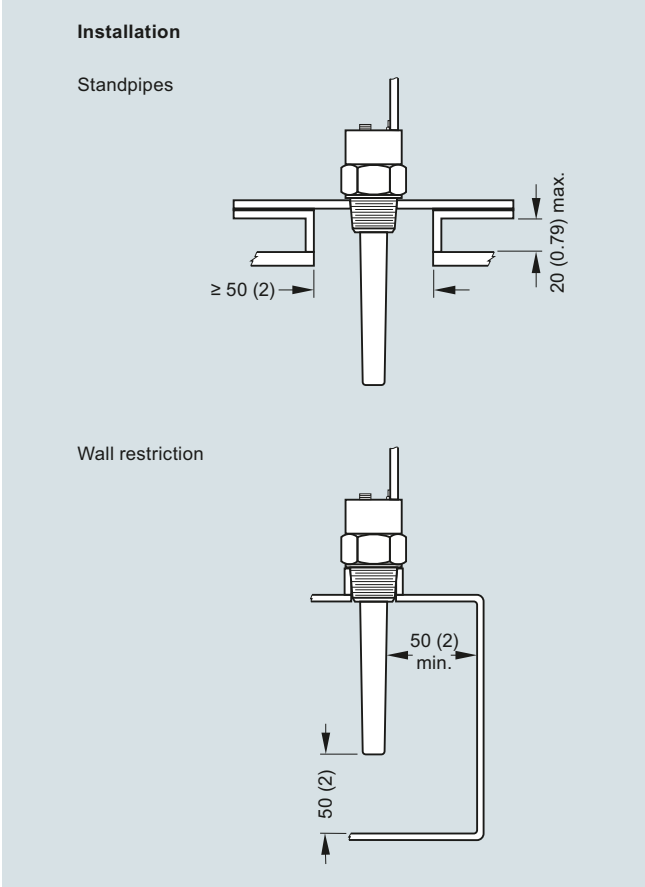

Pointek CLS100 installation, dimensions in mm (inch)

© Siemens 2020

Technical specifications

	Stainless steel process connection (integral cable or enclosure version) (7ML5501)	Fully synthetic process connection (enclosure version only) (7ML5610)
Mode of operation		
Measuring principle	Inverse frequency shift capacitive level detection	Inverse frequency shift capacitive level detection
Input		
Measured variable	Change in picoFarad (pF)	Change in picoFarad (pF)
Output		
Output signal		
• Alarm output	4 ... 20/20 ... 4 mA 2-wire loop	4 ... 20/20 ... 4 mA 2-wire loop
• Switch output[1]	Solid-state: 30 V DC/30 V AC, max. 82 mA	Max. switching voltage: 60 V DC/30 V AC Max. switching current: 1 A
• Fail-safe mode	Min. or max.	Min. or max.
Accuracy		
Repeatability	2 mm (0.08 inch)	2 mm (0.08 inch)
Rated operating conditions[2]		
Installation conditions		
• Location	Indoor/outdoor	Indoor/outdoor
Ambient conditions		
• Ambient temperature	-30 ... +85 °C (-22 ... +185 °F)	-10 ... +85 °C (14 ... 185 °F)
• Storage temperature	-40 ... +85 °C (-40 ... +185 °F)	-40 ... +85 °C (-40 ... +185 °F)
• Installation category	I	I
• Pollution degree	4	4
Medium conditions		
• Relative dielectric constant ε_r	Min. 1.5	Min. 1.5
• Process temperature	-30 ... +100 °C (-22 ... +212 °F)	-10 ... +100 °C (14 ... 212 °F)
• Pressure (vessel)	-1 ... +10 bar g (-14.6 ... +146 psi g), nominal[2]	-1 ... +10 bar g (-14.6 ... +146 psi g), nominal
• Degree of protection		
- Enclosure version	IP68/Type 4/NEMA 4	IP68/Type 4/NEMA 4
- Integral cable version	IP65/Type 4/NEMA 4	Not applicable
• Cable inlet	½" NPT (M20 x 1.5 optional)	½" NPT (M20 x 1.5 optional)
Design		
	Enclosure/Integral cable version	Fully synthetic version
Material		
• Body (Enclosure version)	Thermoplastic polyester	Thermoplastic polyester
• Lid (Enclosure version)	Transparent thermoplastic polycarbonate (PC)	Transparent thermoplastic polycarbonate (PC)
• Integrated cable body (Integral cable version)	316L stainless steel	Not applicable

	Stainless steel process connection (integral cable or enclosure version) (7ML5501)	Fully synthetic process connection (enclosure version only) (7ML5610)
Sensor length (nominal)	100 mm (4 inch)	100 mm (4 inch)
Process connection material of probe/wetted parts[3]	Connection: 316L stainless steel; Process seal: FKM (optional FFKM); Sensor: PPS (optional PVDF)[4]	PPS process connection and PPS sensor (Uni-Construction)
Connection (Enclosure version)	Internal 5-point terminal block, ½" NPT wiring entrance, M20 x 1.5 optional	Removable internal 5-point terminal block, ½" NPT wiring entrance, M20 x 1.5 optional
Connection (Integral cable version)	4 conductors, 1 m (3.3 ft), 0.5 mm² (22 AWG), shielded, polyester jacket	Not applicable
Process connection	¾" NPT [(Taper), ANSI/ASME B1.20.1] R 1" [(BSPT), EN 10226/PT (JIS-T), JIS B 0203] G 1" [(BSPP), EN ISO 228-1/PF (JIS-P), JIS B 0202]	¾" NPT [(Taper), ANSI/ASME B1.20.1] R 1" [(BSPT), EN 10226/PT (JIS-T), JIS B 0203]
Power supply		
Standard	12 ... 33 V DC	12 ... 33 V DC
Intrinsically Safe	10 ... 30 V DC (Intrinsically Safe barrier required)	Not applicable
Certificates and approvals	• General: CE, CSA, FM, RCM • Marine: Lloyds Register of Shipping, categories ENV1, ENV2, and ENV5 Dust Ignition Proof (barrier required): CSA/FM Class II and III, Div. 1, Groups E, F, G T4 • Intrinsically Safe (barrier required): CSA/FM Class I, II, and III, Div. 1, Groups A, B, C, D, E, F, G T4 ATEX II 1 GD 1/2GD EEx ia IIC T4 to T6 T107 °C • Overfill protection: WHG (Germany)	• General: CSA, FM

1) When synthetic process connection version (7ML5610) is used in wet locations, switching voltage of the relay is limited to 35 V DC/16 V AC.

2) When operation is in areas classified as hazardous, observe restrictions according to relevant certificate.
See also Pressure/Temperature curves on page 5/13.

3) For caustic materials, consult a local sales person for alternative O-rings. For more information, please visit http://www.automation.siemens.com/aspa_app.

4) When FFKM O-ring (Option A22) is selected, process temperature is restricted to -20 °C (-4 °F).

© Siemens 2020

Selection and ordering data

	Article No.
Pointek CLS100 RF Capacitance point level switch, stainless steel process connection ↗	**7ML5501-**
Detects level and interface in liquids, solids, slurries and foam. Compact, with 100 mm (4 inch) insertion, adaptable sensitivity, with the ability to tune out build-up on probe.	**0** ■ ■ ■ ■
↗ Click on the Article No. for the online configuration in the PIA Life Cycle Portal.	
Process Connection	
¾" NPT [(Taper), ANSI/ASME B1.20.1]	**A**
R 1" [(BSPT), EN 10226/PT (JIS-T), JIS B 0203]	**E**
G 1" [(BSPP), EN ISO 228-1/PF (JIS-P), JIS B 0202]	**J**
Approvals	
General Purpose: CE, CSA, FM, RCM	**A**
CSA/FM Class I, II, and III, Div. 1, Groups A, B, C, D, E, F, G T4; ATEX II 1 GD ½ GD EEx ia IIC T4 ... T6 T107 °C[1]	**C**
CSA/FM Class II and III, Div. 1, Groups E, F, G[1]	**G**
Device version	
Integral cable version (PPS probe)	**1**
Enclosure version (PPS probe), ½" NPT cable inlet	**3**
Integral cable version with PVDF probe body	**5**
Enclosure version with PVDF probe body (½" NPT cable inlet)	**6**
Enclosure version (PPS probe), M20 x 1.5 cable inlet	**7**
Enclosure version with PVDF probe body, M20 x 1.5 cable inlet	**8**
Overfill protection	
Not required	**0**
Required (WHG)	**1**

[1] Barrier or Intrinsically Safe power supply required for Intrinsically Safe protection.

Further designs	Order code
Please add "**-Z**" to Article No. and specify Order code(s).	
Stainless steel tag [70 x 13 mm (2.75 x 0.5 inch)]: Measuring-point number/identification (max. 20 characters) specify in plain text	**Y17**
FFKM seal O-ring[1]	**A22**
Material inspection Certificate Type 3.1 per EN 10204	**C12**
INMETRO[2]	**E34**
Operating Instructions	
Note: due to ATEX regulations one Quick start manual is included with every product. All literature is available to download for free, in a range of languages, at	

http://www.siemens.com/processinstrumentation/documentation

[1] See Temperature restriction on page 4/14.

[2] Available only with Approvals option C.

Accessories	Article No.
SensGuard, ¾" NPT (PPS). Only available for CLS100 with ¾" NPT thread.	**7ML1830-1DL**
SensGuard, R 1" (BSPT) (PPS). Only available for CLS100 with ¾" NPT thread.	**7ML1830-1DM**
Tag, stainless steel, 12 x 45 mm (0.47 x 1.77 inch), one text line, suitable for enclosures	**7ML1930-1AC**
Siemens Intrinsically Safe Barrier (DC powered), ATEX II 1 G EEx ia	**7NG4124-0AA00**
½" NPT General Purpose Cable Entry IP68/IP69K NEMA 6, -40 ... +80 °C (-40 ... +176 °F), Dust Ignition Proof, cable size 6 ... 12 mm (0.236 ... 0.472 inch)	**7ML1830-1JA**
M20 x 1.5 General Purpose Cable Entry IP68/IP69K NEMA 6, -40 ... +80 °C (-40 ... +176 °F), Dust Ignition Proof, cable size 7 ... 12 mm (0.275 ... 0.472 inch)	**7ML1830-1JC**

	Article No.
Pointek CLS100 RF Capacitance point level switch, PPS process connection ↗	**7ML5610-**
Detects level and interface in liquids, solids, slurries, and foam. Compact, with 100 mm (4 inch) insertion, adaptable sensitivity, with the ability to tune out build-up on probe.	**0** ■ ■ ■ ■
↗ Click on the Article No. for the online configuration in the PIA Life Cycle Portal.	
Process connection (PPS)	
¾" NPT [(Taper), ANSI/ASME B1.20.1] (PPS probe body)	**A**
R 1" [(BSPT), EN 10226/PT (JIS-T), JIS B 0203] (PPS probe body)	**B**
Approvals	
General Purpose: CSA, FM	**D**
Versions/Options	
Enclosure version, PPS process connection, ½" NPT cable inlet	**1**
Enclosure version, PPS process connection, M20 x 1.5	**2**
Overfill protection	
Not required	**0**
Required	**1**

Further designs	Order code
Please add "**-Z**" to Article No. and specify Order code(s).	
Stainless steel tag [70 x 13 mm (2.75 x 0.5 inch)]: Measuring-point number/identification (max. 20 characters) specify in plain text	**Y17**
Material inspection Certificate Type 3.1 per EN 10204	**C12**
Operating Instructions	
Note: due to ATEX regulations one Quick start manual is included with every product. All literature is available to download for free, in a range of languages, at	

http://www.siemens.com/processinstrumentation/documentation

Accessories	Article No.
SensGuard, ¾" NPT (PPS). Only available for CLS100 with ¾" NPT thread.	**7ML1830-1DL**
SensGuard, R 1" (BSPT) (PPS). Only available for CLS100 with ¾" NPT thread.	**7ML1830-1DM**
Tag, stainless steel, 12 x 45 mm, (0.47 x 1.77 inch) one text line, suitable for enclosures	**7ML1930-1AC**

[1] See Temperature restriction on page 4/14.

© Siemens 2020

Options

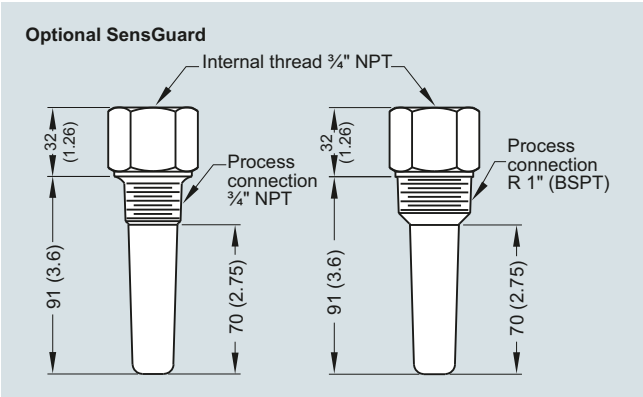

Optional SensGuard, dimensions in mm (inch)

© Siemens 2020

Characteristic curves

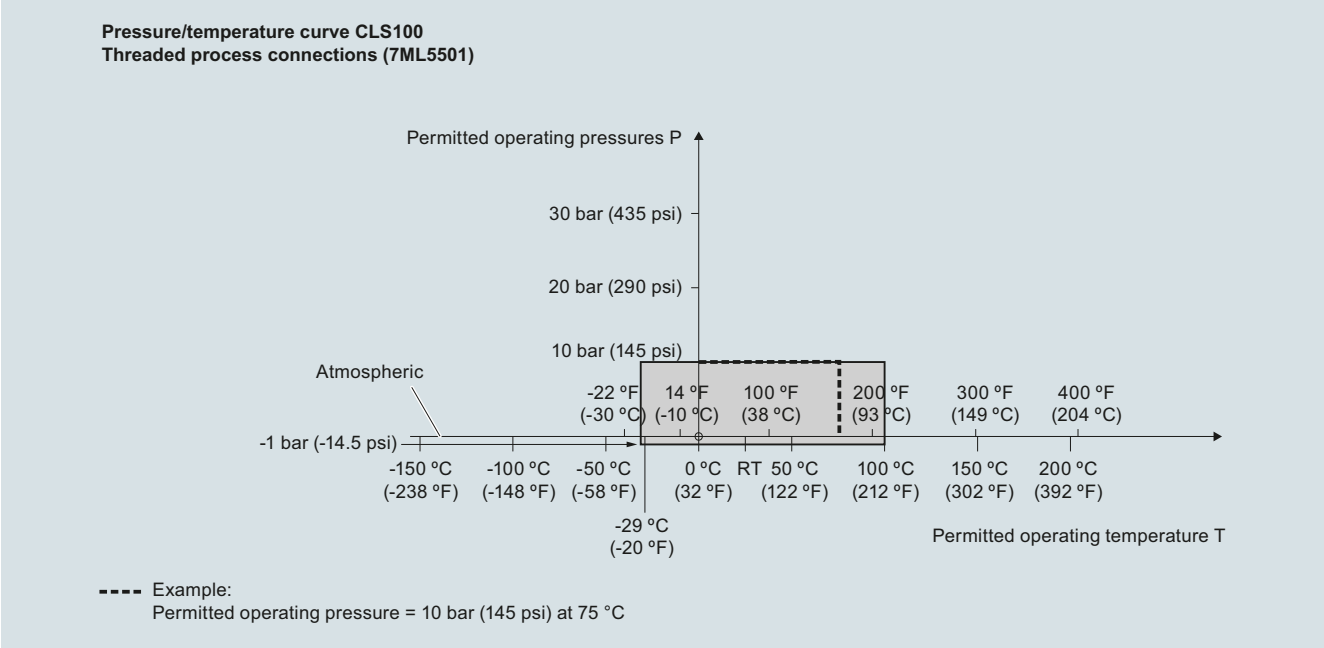

Pointek CLS100 process pressure/temperature derating curves

Dimensional drawings

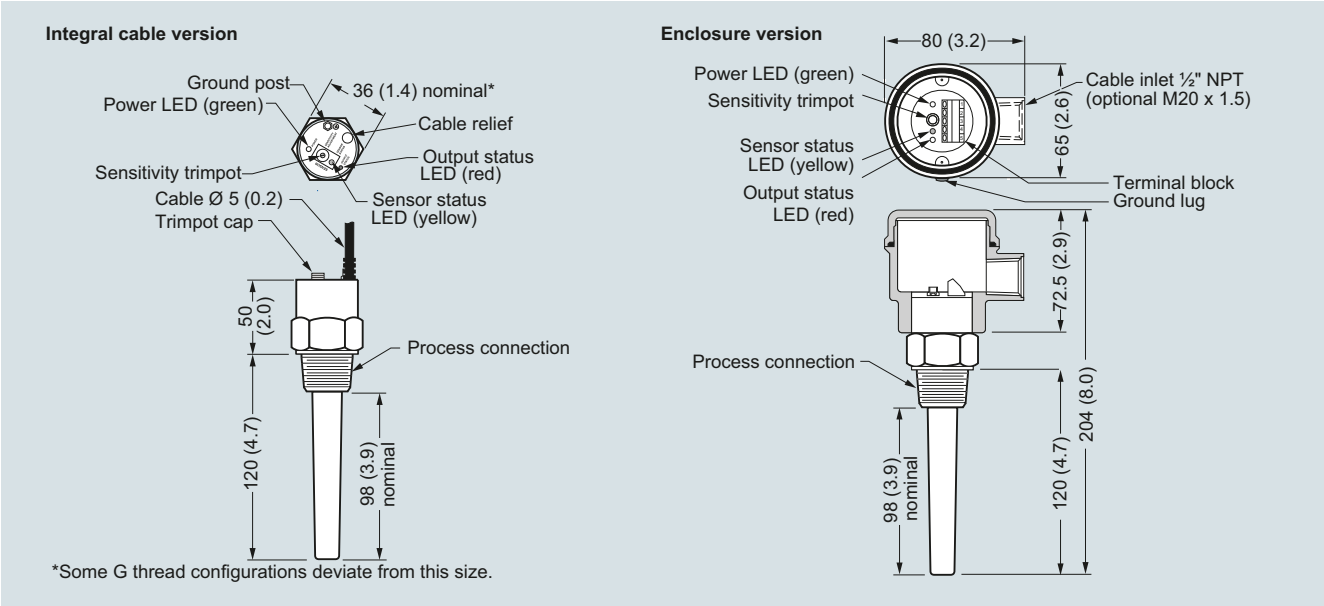

Pointek CLS100, dimensions in mm (inch)

© Siemens 2020

Circuit diagrams

Integral Cable Version - Non Intrinsically Safe only

LOW/HIGH Alarm

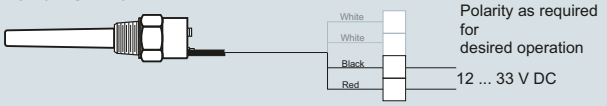

4/20 mA Loop Alarm

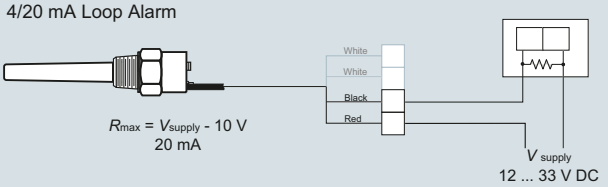

Solid State Switch Version

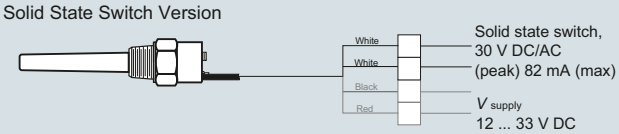

Enclosure and Fully Synthetic Version

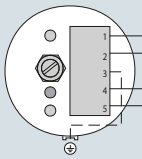

Terminal operations	Cable equivalent
mA current loop (+V or -V)	Red wire
mA current loop (+V or -V)	Black wire
ground	Cable shield
Solid state switch/relay*	White wire
Solid state switch/relay*	White wire

* Switch/relay normally open in unpowered state
* Relay not available on Pointek CLS100 IS version (7ML5501)

Note:
When driving an inductive load (for example, an external relay), a protection diode must be connected in the correct polarity to prevent possible switch damage due to inductive spikes generated by switching the inductor (please refer to instruction manual). Intrinsically Safe Models - please follow local regulations and area classifications; refer to instruction manual for more details.

Pointek CLS100 connections

© Siemens 2020

Overview

Pointek CLS200 (standard version) is a versatile inverse frequency shift capacitance level and material detection switch with optional rod/cable choices and configurable output. CLS200 is ideal for detection of liquids, solids, slurries, foam, and interfaces and has the ability to tune out buildup on the probe.

Benefits

- Potted construction protects signal circuit from shock, vibration, humidity, and/or condensation
- High chemical resistance
- Level detection independent of tank or pipe earth reference
- Insensitive to product buildup due to high frequency oscillation
- 3 LED indicators for sensor status, output status, and power
- Suitable for API 2350

Application

Pointek CLS200 standard version has 3 LED indicators with basic relay and solid-state switch alarms. Universal switch for solids/liquids and interface.

The power supply is galvanically isolated and accepts a wide range of voltages (12 to 250 V AC/DC). When used with thermal isolator, the stainless steel and PPS (PVDF optional) materials used in the probe construction provide a temperature rating up to 125 °C (257 °F) on the process wetted portion of the probe. The switch responds to any material with a dielectric constant of 1.5 or more by detecting a change in oscillating frequency, and it can be set to detect before contact or on contact with the probe. The CLS200 operates independently of the tank wall or pipe so it does not require an external reference electrode for level detection in a non-conductive vessel such as concrete or plastic (EMC regulations applicable in some regions).

- Key Applications: liquids, slurries, powders, granules, pressurized applications, hazardous areas

Configuration

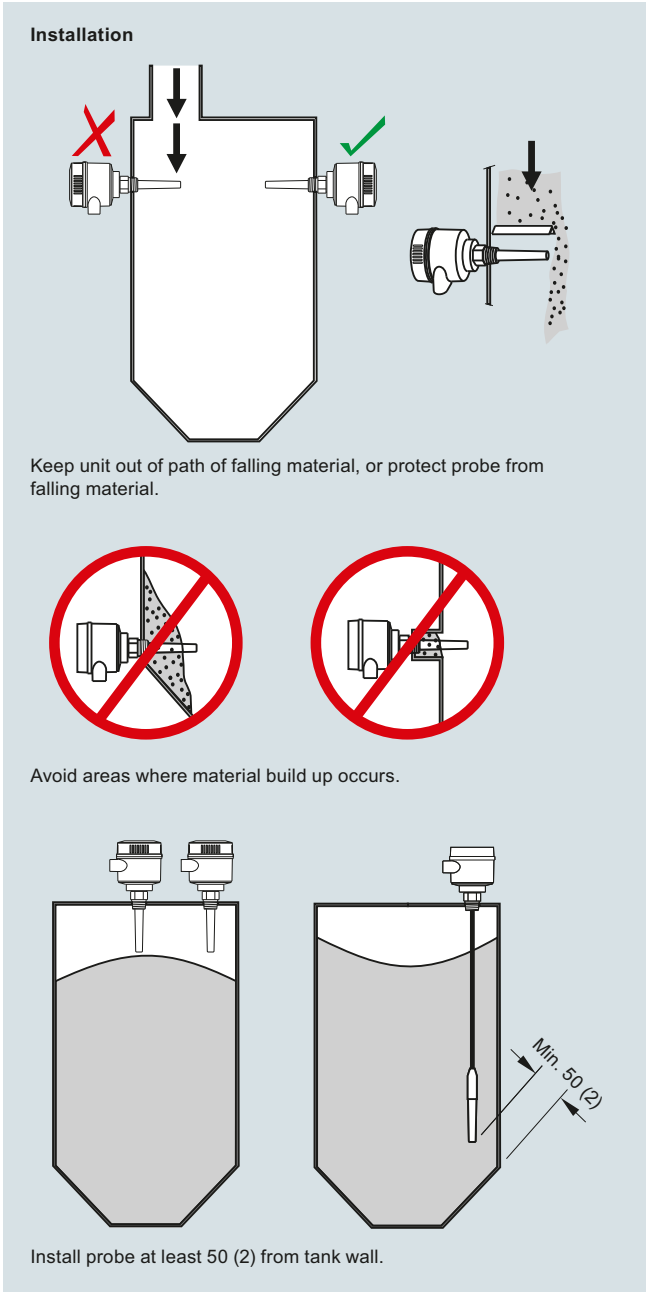

Pointek CLS200 installation, dimensions in mm (inch)

© Siemens 2020

Technical specifications

Mode of operation	
Measuring principle	Inverse frequency shift capacitive level detection
Input	
Measured variable	Change in picoFarad (pF)
Output	
Output signal	
• Relay output	1 SPDT Form C relay
- Max. contact voltage	• 30 V DC • 250 V AC
- Max. contact current	• 5 A DC • 8 A AC
- Max. switching capacity	150 W DC 2 000 VA AC
- Time delay (ON and/or OFF)	1 ... 60 s
• Solid-state output	
- Output	Galvanically isolated
- Protection	Against reversed polarity (bipolar)
- Max. switching voltage	• 30 V DC • 30 V peak AC
- Max. load current	82 mA
- Voltage drop	< 1 V, typical at 50 mA
- Time delay (pre or post switching)	1 ... 60 s
Rated operating conditions[1]	
Installation conditions	
• Location	Indoor/outdoor
Ambient conditions	
• Ambient temperature	-40 ... +85 °C (-40 ... +185 °F)[2]
• Storage temperature	-40 ... +85 °C (-40 ... +185 °F)
• Installation category	II
• Pollution degree	4
Medium conditions	Liquids, bulk solids, slurries and interfaces
• Relative dielectric constant ε_r	Min. 1.5
• Process temperature	
- Without thermal isolator	-40 ... +85 °C (-40 ... +185 °F)[2]
- With thermal isolator	-40 ... +125 °C (-40 ... +257 °F)
• Process pressure (rod version)	-1 ... +25 bar g (-14.6 ... +365 psi g) (nominal)
• Process pressure (cable version)[3]	-1 ... +10 bar g (-14.6 ... +150 psi g) (nominal)
• Process pressure (sliding coupling version)	-1 ... +10 bar g (-14.6 ... +150 psi g) (nominal)
Electromagnetic compatibility	To comply with CE EMC regulations (where applicable); the CLS200 should be installed per the instruction manual.

Design	
Material	
• Enclosure	Epoxy-coated aluminum with gasket
• Optional thermal isolator	316L stainless steel
Connection	Removable terminal block, max. 2.5mm²
Degree of protection	IP65/Type 4/NEMA 4 (optional IP68)
Cable inlet	2 x M20 x 1.5 thread (option: 2 x ½" NPT conduit entry including 1 plugged entry)
Power supply	12 ... 250 V AC/DC, 0 ... 60 Hz max. 2 W
Certificates and approvals	
General Purpose	CSA, FM, CE, RCM
Dust Ignition Proof	ATEX II ½ D T100 °C
Flameproof Enclosure With IS Probe	ATEX II 1 G EEx d[ia] IIC T6 ... T4 ATEX II ½ D T100 °C
Dust Ignition Proof with IS Probe	CSA/FM Class II, Div. 1, Groups E, F, G CSA/FM Class III T4
Explosion Proof Enclosure With IS Probe	CSA/FM Class I, Div. 1, Groups A, B, C, D CSA/FM Class II, Div. 1, Groups E, F, G CSA/FM Class III T4
Marine	Lloyds Register of Shipping, Categories ENV1, ENV2, and ENV5
Overfill Protection	WHG (Germany) VLAREM II
Others	Pattern Approval (China), SIL

1) When operation is in areas classified as hazardous, observe restrictions according to relevant certificate. See also Pressure/Temperature curves on page 5/34.

2) Thermal isolator is used if process connection temperature exceeds 85 °C (185 °F)

3) Pressure rating of process seal is temperature dependent. See Pressure/Temperature curves on page 5/34.

© Siemens 2020

Technical specifications (continued)

Design: Probe				
	Rod version	**Sanitary version**	**Cable version**	**Sliding Coupling version**
Max. length	5 500 mm (216.53 inch)	5 500 mm (216.53 inch)	• 30 000 mm (1 181.1 inch) liquids and slurries • 5 000 mm (196.85 inch) solids (under loads)	5 500 mm (216.53 inch)
Process connection	R ¾", 1", 1¼", 1½" [(BSPT), EN 10226/PT (JIS-T), JIS B 0203]	1½", 2" sanitary fitting clamp 316L stainless steel	R ¾", 1", 1¼", 1½" [(BSPT), EN 10226/PT (JIS-T), JIS B 0203]	R ¾", 1", 1¼", 1½" [(BSPT), EN 10226/PT (JIS-T), JIS B 0203]
	¾", 1", 1¼", 1½" NPT [(Taper), ANSI/ASME B1.20.1]		¾", 1", 1¼", 1½" NPT [(Taper), ANSI/ASME B1.20.1]	¾", 1", 1¼", 1½" NPT [(Taper), ANSI/ASME B1.20.1]
	G ¾", 1", 1½" [(BSPP), EN ISO 228-1/PF (JIS-P), JIS B 0202]		G ¾", 1", 1½" [(BSPP), EN ISO 228-1/PF (JIS-P), JIS B 0202]	G ¾", 1", 1½" [(BSPP), EN ISO 228-1/PF (JIS-P), JIS B 0202]
	316L stainless steelASME/EN flange		316L stainless steel ASME/EN flange	
Extension material	316L stainless steel optional PFA coated[1)]	316L stainless steel	Fluoroethylene propylene (FEP) cable with stainless steel core	316L stainless steel
Sensor wetted parts	PPS (optional PVDF)	PPS (optional PVDF)	PPS (optional PVDF)	PPS (optional PVDF)
O-ring seal material	FKM (optional FFKM)[2)]	FKM (optional FFKM)[2)]	FKM (optional FFKM)[2)]	FKM (optional FFKM)[2)]
Thermal isolator[3)]	Optional	Optional	Optional	Optional
Extension	User selected length	User selected length	Cable extension	User selected length

1) PFA coating (7ML5634 and 7ML5644) has 120 micron thickness

2) For caustic materials, consult a local sales person for alternative O-rings. For more information, please visit http://www.automation.siemens.com/aspa_app.

3) Thermal isolator is used if process connection temperature exceeds 85 °C (185 °F)

© Siemens 2020

Selection and ordering data

	Article No.
Pointek CLS200 RF Capacitance point level switch, rod design ↗	**7ML5630-** ■ ■ ■ ■ ■ - ■ ■ ■ **0**
Detects level and interface in liquids, solids, slurries, and foam. Adjustable, 5.5 m (18.04 ft), insertion, adaptable sensitivity, with the ability to tune out build-up on probe.	
↗ Click on the Article No. for the online configuration in the PIA Life Cycle Portal.	
Process connection	
Threaded, 316L stainless steel	
¾" NPT [(Taper), ANSI/ASME B1.20.1]	**0 A**
1" NPT [(Taper), ANSI/ASME B1.20.1]	**0 B**
1¼" NPT [(Taper), ANSI/ASME B1.20.1]	**0 C**
1½" NPT [(Taper), ANSI/ASME B1.20.1]	**0 D**
R ¾" [(BSPT), EN 10226/PT (JIS-T), JIS B 0203]	**1 A**
R 1" [(BSPT), EN 10226/PT (JIS-T), JIS B 0203]	**1 B**
R 1½" [(BSPT), EN 10226/PT (JIS-T), JIS B 0203]	**1 D**
G ¾" [(BSPP), EN SO 228-1/PF (JIS-P), JIS B 0202]	**3 A**
G 1" [(BSPP), EN ISO 228-1/PF (JIS-P), JIS B 0202]	**3 B**
G 1½" [(BSPP), EN ISO 228-1/PF (JIS-P), JIS B 0202]	**3 D**
Welded flange, 316L stainless steel, raised face	
1" ASME, 150 lb	**5 A**
1" ASME, 300 lb	**5 B**
1" ASME, 600 lb	**5 C**
1½" ASME, 150 lb	**5 D**
1½" ASME, 300 lb	**5 E**
1½" ASME, 600 lb	**5 F**
2" ASME, 150 lb	**5 G**
2" ASME, 300 lb	**5 H**
2" ASME, 600 lb	**5 J**
3" ASME, 150 lb	**5 K**
3" ASME, 300 lb	**5 L**
3" ASME, 600 lb	**5 M**
4" ASME, 150 lb	**5 N**
4" ASME, 300 lb	**5 P**
4" ASME, 600 lb	**5 Q**
Welded flange, 316L stainless steel, Type A flat faced	
DN 25, PN 16	**6 A**
DN 25, PN 40	**6 B**
DN 40, PN 16	**6 C**
DN 40, PN 40	**6 D**
DN 50, PN 16	**6 E**
DN 50, PN 40	**6 F**
DN 80, PN 16	**6 G**
DN 80, PN 40	**6 H**
DN 100, PN 16	**6 J**
DN 100, PN 40	**6 K**
(Note: Flange bolting patterns and facings dimensionally correspond to the applicable ASME B16.5 or EN 1092-1 standard.)	
Probe length	
(length from flange face) (threaded lengths include process thread)	
Note: No Y01 needed in Order code for standard lengths	
Compact [threaded 120 mm (4.72 inch), Flanged 98 mm (3.86 inch)]	**A**
Extended rod, 250 mm (9.84 inch)	**B**
Extended rod, 350 mm (13.78 inch)	**C**
Extended rod, 500 mm (19.69 inch)	**D**
Extended rod, 750 mm (29.53 inch)	**E**
Extended rod, 1 000 mm (39.37 inch)	**F**
Extended rod, 1 250 mm (49.21 inch)	**G**
Extended rod, 1 350 mm (53.15 inch)	**H**
Extended rod, 1 500 mm (59.06 inch)	**J**
Extended rod, 1 750 mm (68.90 inch)	**K**
Extended rod, 2 000 mm (78.74 inch)	**L**

	Article No.
Pointek CLS200 RF Capacitance point level switch, rod design	**7ML5630-** ■ ■ ■ ■ ■ - ■ ■ ■ **0**
Detects level and interface in liquids, solids, slurries, and foam. Adjustable, 5.5 m (18.04 ft), insertion, adaptable sensitivity, with the ability to tune out build-up on probe.	
Add Order code Y01 and plain text: "Insertion length ... mm"	
Extended rod, 210 ... 1 000 mm (8.27 ... 39.37 inch)	**M**
Extended rod, 1 001 ... 2 000 mm (39.41 ... 78.74 inch)	**N**
Extended rod, 2 001 ... 3 000 mm (78.78 ... 118.11 inch)	**P**
Extended rod, 3 001 ... 4 000 mm (118.15 ... 157.48 inch)	**Q**
Extended rod, 4 001 ... 5 000 mm (157.52 ... 196.85 inch)	**R**
Extended rod, 5 001 ... 5 500 mm (196.89 ... 216.53 inch)	**S**
Thermal isolator	
Without thermal isolator	**0**
With thermal isolator [for process connection temperatures over 85 °C (185 °F)]	**1**
Remote mount electronics and mounting bracket	
With 2 m (79 inch) of cable[1)2)]	**2**
With 5 m (197 inch) of cable[1)2)]	**3**
Wetted seals	
FKM	**0**
FFKM [for process temperatures above -20 °C (-4 °F)]	**1**
Probe material	
316L stainless steel with PPS probe body	**0**
316L stainless steel with PVDF probe body	**1**
Approvals	
Dust Ignition Proof:CE, RCM, ATEX II 1/2 D T100 °C	**C**
Flameproof Enclosure with IS Probe: CE, RCM, ATEX II 1 G EEx d[ia] IIC T6 ... T4, ATEX II 1/2 D T100 °C	**D**
Flameproof Enclosure with IS Probe, with WHG approval: CE, RCM, ATEX II 1/2 G EEx d[ia] IIC T6 ... T4, ATEX II 1/2 D T100 °C	**E**
Dust Ignition Proof with IS Probe: CSA/FM Class II, Div. 1, Groups E, F, G, CSA/FM Class III T4	**F**
Explosion Proof Enclosure with IS Probe:CSA/FM Class I, Div. 1, Groups A, B, C, D, CSA/FM Class II, Div. 1, Groups E, F, G, CSA/FM Class III T4	**G**
General Purpose (CSA, FM)	**H**
General Purpose (CE, RCM)	**J**
General Purpose (CSA, FM, CE, RCM) with WHG approval	**K**
Enclosure and lid	
Aluminum epoxy coated	
2 x ½" NPT via adapter - cable inlet, IP65	**A**
2 x M20 x 1.5 cable inlet, IP65	**B**
2 x ½" NPT via adapter - cable inlet, IP68	**C**
2 x M20 x 1.5 cable inlet IP68	**D**

1) Barrier or Intrinsically Safe power supply required for Intrinsically Safe protection.

2) Available with Approval options F, G, and H.

© Siemens 2020

Selection and ordering data

	Order code
Further designs	
Please add "**-Z**" to Article No. and specify Order code(s).	
Total insertion length: enter the total insertion length in plain text description	**Y01**
Stainless steel tag [70 x 13 mm (2.75 x 0.5 inch)]: Measuring-point number/identification (max. 27 characters) specify in plain text	**Y15**
Manufacturer's test certificate: M to DIN 55350, Part 18 and ISO 9000	**C11**
Material inspection Certificate Type 3.1 per EN 10204	**C12**
SIL/IEC 61508 Declaration of Conformity [SIL 2 (overspill)]	**C20**
INMETRO[1)]	**E34**
Operating Instructions	
All literature is available to download for free, in a range of languages, at	
http://www.siemens.com/processinstrumentation/documentation	
Accessories	See page **4/41**

[1)] Available only with Approvals options C, D, E.

	Article No.
Pointek CLS200 RF Capacitance point level switch, cable design ↗	**7ML5631-** ■ ■ ■ ■ ■ - ■ ■ ■ **0**
Detects level and interface in liquids, solids, slurries, and foam. Cable extension options to 30 m (98.43 ft), adaptable sensitivity, with the ability to tune out build-up on probe.	
↗ Click on the Article No. for the online configuration in the PIA Life Cycle Portal.	
Process connection	
Threaded, 316L stainless steel	
¾" NPT [(Taper), ANSI/ASME B1.20.1]	**0 A**
1" NPT [(Taper), ANSI/ASME B1.20.1]	**0 B**
1¼" NPT [(Taper), ANSI/ASME B1.20.1]	**0 C**
1½" NPT [(Taper), ANSI/ASME B1.20.1]	**0 D**
R ¾" [(BSPT), EN 10226/PT (JIS-T), JIS B 0203]	**1 A**
R 1" [(BSPT), EN 10226/PT (JIS-T), JIS B 0203]	**1 B**
R 1½" [(BSPT), EN 10226/PT (JIS-T), JIS B 0203]	**1 D**
G ¾" [(BSPP), EN ISO 228-1/PF (JIS-P), JIS B 0202]	**3 A**
G 1" [(BSPP), EN ISO 228-1/PF (JIS-P), JIS B 0202]	**3 B**
G 1½" [(BSPP), EN ISO 228-1/PF (JIS-P), JIS B 0202]	**3 D**
Welded flange, 316L stainless steel, raised face	
1" ASME, 150 lb	**5 A**
1" ASME, 300 lb	**5 B**
1" ASME, 600 lb	**5 C**
1½" ASME, 150 lb	**5 D**
1½" ASME, 300 lb	**5 E**
1½" ASME, 600 lb	**5 F**
2" ASME, 150 lb	**5 G**
2" ASME, 300 lb	**5 H**
2" ASME, 600 lb	**5 J**
3" ASME, 150 lb	**5 K**
3" ASME, 300 lb	**5 L**
3" ASME, 600 lb	**5 M**
4" ASME, 150 lb	**5 N**
4" ASME, 300 lb	**5 P**
4" ASME, 600 lb	**5 Q**
Welded flange, 316L stainless steel, Type A flat faced	
DN 25, PN 16	**6 A**
DN 25, PN 40	**6 B**
DN 40, PN 16	**6 C**
DN 40, PN 40	**6 D**
DN 50, PN 16	**6 E**
DN 50, PN 40	**6 F**
DN 80, PN 16	**6 G**
DN 80, PN 40	**6 H**
DN 100, PN 16	**6 J**
DN 100, PN 40	**6 K**
(Note: Flange bolting patterns and facings dimensionally correspond to the applicable ASME B16.5 or EN 1092-1 standard.)	

© Siemens 2020

Selection and ordering data

	Article No.
Pointek CLS200 RF Capacitance point level switch, cable design	**7ML5631-** ■ ■ ■ ■ ■ - ■ ■ ■ **0**
Detects level and interface in liquids, solids, slurries, and foam. Cable extension options to 30 m (98.43 ft), adaptable sensitivity, with the ability to tune out build-up on probe.	
Probe length	
(length from flange face) (threaded lengths include process thread)	
Note: No Y01 needed in Order code for standard lengths	
Extended cable, 3 000 mm (118.11 inch), length can be determined by customer on assembly[1]	**A**
Extended cable, 6 000 mm (236.22 inch), length can be determined by customer on assembly[1]	**B**
Add Order code Y01 and plain text: "Insertion length ... mm"	
Extended cable, 500 ... 5 000 mm (19.69 ... 196.85 inch)	**C**
Extended cable, 5 001 ... 10 00 mm (196.89 ... 393.70 inch)	**D**
Extended cable, 10 001 ... 15 000 mm (393.74 ... 590.55 inch)	**E**
Extended cable, 15 001 ... 20 000 mm (590.59 ... 787.4 inch)	**F**
Extended cable, 20 001 ... 25 000 mm (787.44 ... 984.25 inch)	**G**
Extended cable, 25 001 ... 30 000 mm (984.29 ... 1 181.1 inch)	**H**
Thermal isolator	
Without thermal isolator	**0**
With thermal isolator [for process connection temperatures over 85 °C (185 °F)]	**1**
Remote mount electronics and mounting bracket	
With 2 m (79 inch) of cable[2]	**2**
With 5 m (197 inch) of cable[2]	**3**
Wetted seals	
FKM and PTFE	**0**
FFKM and PTFE [for process temperatures above -20 °C) (-4 °F)]	**1**
Probe material	
FEP jacketed cable with PPS probe body	**0**
FEP jacketed cable with PVDF probe body	**1**
Approvals	
Dust Ignition Proof: CE, RCM, ATEX II 1/2 D T100 °C	**C**
Flameproof Enclosure with IS Probe: CE, RCM, ATEX II 1 G EEx d[ia] IIC T6 ... T4, ATEX II 1/2 D T100 °C	**D**
Flameproof Enclosure with IS Probe, with WHG approval: CE, RCM, ATEX II 1/2 G EEx d[ia] IIC T6 ... T4, ATEX II 1/2 D T100 °C	**E**
Dust Ignition Proof with IS Probe: CSA/FM Class II, Div. 1, Groups E, F, G, CSA/FM Class III T4	**F**
Explosion Proof Enclosure with IS Probe: CSA/FM Class I, Div. 1, Groups A, B, C, D, CSA/FM Class II, Div. 1, Groups E, F, G, CSA/FM Class III T4	**G**
General Purpose (CSA, FM)	**H**
General Purpose (CE, RCM)	**J**
General Purpose (CSA, FM, CE, RCM) with WHG approval	**K**
Enclosure and lid	
Aluminum epoxy coated	
2 x ½" NPT via adapter - cable inlet, IP65	**A**
2 x M20 x 1.5 cable inlet, IP65	**B**
2 x ½" NPT via adapter - cable inlet, IP68	**C**
2 x M20 x 1.5 cable inlet, IP68	**D**

[1] Sensor detached to allow customer to set desired cable length.
[2] Available with Approvals options F ... H.

	Order code
Further designs	
Please add "**-Z**" to Article No. and specify Order code(s).	
Total insertion length: enter the total insertion length in plain text description	**Y01**
Stainless steel tag [70 x 13 mm (2.75 x 0.5 inch)]: Measuring-point number/identification (max. 27 characters) specify in plain text	**Y15**
Manufacturer's test certificate: M to DIN 55350, Part 18 and ISO 9000	**C11**
Material inspection Certificate Type 3.1 per EN 10204	**C12**
SIL/IEC 61508 Declaration of Conformity [SIL 2 (overspill)]	**C20**
INMETRO[1]	**E34**
Operating Instructions	
All literature is available to download for free, in a range of languages, at	
http://www.siemens.com/processinstrumentation/documentation	
Accessories	See page **4/41**

[1] Available only with Approvals options C, D, E.

© Siemens 2020

Selection and ordering data

	Article No.
Pointek CLS200 RF Capacitance point level switch, sanitary rod design ↗	**7ML5632-** ■ ■ ■ ■ ■ - ■ ■ ■ **0**
Detects level and interface in liquids, solids, slurries, and foam. Adjustable, 5.5 m (18.04 ft), insertion, adaptable sensitivity, with the ability to tune out build-up on probe.	
↗ Click on the Article No. for the online configuration in the PIA Life Cycle Portal.	
Process connection	
Sanitary 316L stainless steel	
1" sanitary fitting clamp	**8 A**
1½" sanitary fitting clamp	**8 B**
2" sanitary fitting clamp	**8 C**
2½" sanitary fitting clamp	**8 D**
3" sanitary fitting clamp (Note: Sanitary connection dimensionally corresponds to the applicable ISO 2852 standard)	**8 E**
Probe length	
(length from process connection face)	
Note: No Y01 needed in Order code for standard lengths	
Compact, 98 mm (3.86 inch)	**A**
Extended rod, 250 mm (9.84 inch)	**B**
Extended rod, 350 mm (13.78 inch)	**C**
Extended rod, 500 mm (19.69 inch)	**D**
Extended rod, 750 mm (29.53 inch)	**E**
Extended rod, 1 000 mm (39.37 inch)	**F**
Extended rod, 1 250 mm (49.21 inch)	**G**
Extended rod, 1 350 mm (53.15 inch)	**H**
Extended rod, 1 500 mm (59.06 inch)	**J**
Extended rod, 1 750 mm (68.90 inch)	**K**
Extended rod, 2 000 mm (78.74 inch)	**L**
Add Order code Y01 and plain text: "Insertion length ... mm"	
Extended rod, 110 ... 350 mm (4.3 ... 13.78 inch)	**M**
Extended rod, 351 ... 1 000 mm (13.78 ... 39.37 inch)	**N**
Extended rod, 1 001 ... 2 000 mm (39.41 ... 78.74 inch)	**P**
Extended rod, 2 001 ... 3 000 mm (78.78 ... 118.11 inch)	**Q**
Extended rod, 3 001 ... 4 000 mm (118.15 ... 157.48 inch)	**R**
Extended rod, 4 001 ... 5 000 mm (157.52 ... 196.85 inch)	**S**
Extended rod, 5 001 ... 5 500 mm (196.89 ... 216.53 inch)	**T**
Thermal isolator	
Thermal isolator	**0**
With thermal isolator [for process connection temperatures over 85 °C (185 °F)]	**1**
Remote mount electronics and mounting bracket	
Remote mount electronics and mounting bracket	**2**
Remote mount electronics with 5 m (197 inch) of cable	**3**
Wetted seals	
FKM	**0**
FFKM [for process temperatures above -20 °C (-4 °F)]	**1**
Probe material	
316L stainless steel with PPS probe body	**0**
316L stainless steel with PVDF probe body	**1**

	Article No.
Pointek CLS200 RF Capacitance point level switch, sanitary rod design	**7ML5632-** ■ ■ ■ ■ ■ - ■ ■ ■ **0**
Detects level and interface in liquids, solids, slurries, and foam. Adjustable, 5.5 m (18.04 ft), insertion, adaptable sensitivity, with the ability to tune out build-up on probe.	
Approvals	
Dust Ignition Proof: CE, RCM, ATEX II ½ D T100 °C	**C**
Flameproof Enclosure with IS Probe: CE, RCM, ATEX II 1 G EEx d[ia] IIC T6 ... T4, ATEX II ½ D T100 °C	**D**
Flameproof Enclosure with IS Probe: CE, RCM, ATEX II 1 G EEx d[ia] IIC T6 ... T4, ATEX II ½ D T100 °C	**E**
Flameproof Enclosure with IS Probe, with WHG approval: CE, RCM, ATEX II ½ G EEx d[ia] IIC T6 ... T4, ATEX II ½ D T100 °C	**F**
Dust Ignition Proof with IS Probe: CSA/FM Class II, Div. 1, Groups E, F, G, CSA/FM Class III T4	**G**
General Purpose (CSA, FM)	**H**
General Purpose (CE, RCM)	**J**
General Purpose (CSA, FM, CE, RCM) with WHG approval	**K**
Enclosure and lid	
Aluminum epoxy coated	
2 x ½" NPT via adapter - cable inlet, IP65	**A**
2 x M20 x 1.5 cable inlet, IP65	**B**
2 x ½" NPT via adapter - cable inlet, IP68	**C**
2 x M20 x 1.5 cable inlet, IP68	**D**

Further designs	Order code
Please add "**-Z**" to Article No. and specify Order code(s).	
Total insertion length: enter the total insertion length in plain text description	**Y01**
Stainless steel tag [70 x 13 mm (2.75 x 0.5 inch)]: Measuring-point number/identification (max. 27 characters) specify in plain text	**Y15**
Manufacturer's test certificate: M to DIN 55350, Part 18 and ISO 9000	**C11**
Material inspection Certificate Type 3.1 per EN 10204	**C12**
SIL/IEC 61508 Declaration of Conformity [SIL 2 (overspill)]	**C20**
INMETRO[1)]	**E34**
Operating Instructions	
All literature is available to download for free, in a range of languages, at	

http://www.siemens.com/processinstrumentation/documentation

Accessories	See page **4/41**

[1)] Available only with Approvals options C, D, E.

© Siemens 2020

Selection and ordering data

	Article No.
Pointek CLS200 RF Capacitance point level switch, sliding coupling design ↗	**7ML5633-** ■ ■ ■ ■ ■ - ■ ■ ■ **0**
Detects level and interface in liquids, solids, slurries, and foam. Adjustable, 5.5 m (18.04 ft), insertion, adaptable sensitivity, with the ability to tune out build-up on probe.	
↗ Click on the Article No. for the online configuration in the PIA Life Cycle Portal.	
Process connection	
Threaded, 316L stainless steel	
¾" NPT [(Taper), ANSI/ASME B1.20.1]	**0 A**
1" NPT [(Taper), ANSI/ASME B1.20.1]	**0 B**
1¼" NPT [(Taper), ANSI/ASME B1.20.1]	**0 C**
1½" NPT [(Taper), ANSI/ASME B1.20.1]	**0 D**
R ¾" [(BSPT), EN 10226/PT (JIS-T), JIS B 0203]	**1 A**
R 1" [(BSPT), EN 10226/PT (JIS-T), JIS B 0203]	**1 B**
R 1½" [(BSPT), EN 10226/PT (JIS-T), JIS B 0203]	**1 D**
G ¾" [(BSPP), EN ISO 228-1/PF (JIS-P), JIS B 0202]	**3 A**
G 1" [(BSPP), EN ISO 228-1/PF (JIS-P), JIS B 0202]	**3 B**
G 1½" [(BSPP), EN ISO 228-1/PF (JIS-P), JIS B 0202]	**3 D**
Probe length	
(length from flange face) (threaded lengths include process thread)	
Note: No Y01 needed in Order code for standard lengths	
Extended rod, 350 mm (13.78 inch)	**C**
Extended rod, 500 mm (19.69 inch)	**D**
Extended rod, 750 mm (29.53 inch)	**E**
Extended rod, 1 000 mm (39.37 inch)	**F**
Extended rod, 1 250 mm (49.21 inch)	**G**
Extended rod, 1 350 mm (53.15 inch)	**H**
Extended rod, 1 500 mm (59.06 inch)	**J**
Extended rod, 1 750 mm (68.90 inch)	**K**
Extended rod, 2 000 mm (78.74 inch)	**L**
Add Order code Y01 and plain text: "Insertion length ... mm"	
Extended rod, 350 ... 1 000 mm (13.78 ... 39.37 inch)	**M**
Extended rod, 1 001 ... 2 000 mm (39.41 ... 78.74 inch)	**N**
Extended rod, 2 001 ... 3 000 mm (78.78 ... 118.11 inch)	**P**
Extended rod, 3 001 ... 4 000 mm (118.15 ... 157.48 inch)	**Q**
Extended rod, 4 001 ... 5 000 mm (157.52 ... 196.85 inch)	**R**
Extended rod, 5 001 ... 5 500 mm (196.89 ... 216.53 inch)	**S**
Thermal isolator	
Without thermal isolator	**0**
With thermal isolator [for process connection temperatures over 85 °C (185 °F)]	**1**
Remote mount electronics and mounting bracket	
With 2 m (79 inch) of cable[1)]	**2**
With 5 m (197 inch) of cable[1)]	**3**
Wetted seals	
FKM and PTFE	**0**
FFKM and PTFE [for process temperatures above -20 °C (-4 °F)]	**1**
Probe material	
316L stainless steel with PPS probe body	**0**
316L stainless steel with PVDF probe body	**1**

	Article No.
Pointek CLS200 RF Capacitance point level switch, sliding coupling design	**7ML5633-** ■ ■ ■ ■ ■ - ■ ■ ■ **0**
Detects level and interface in liquids, solids, slurries, and foam. Adjustable, 5.5 m (18.04 ft), insertion, adaptable sensitivity, with the ability to tune out build-up on probe.	
Approvals	
Dust Ignition Proof: CE, RCM, ATEX II 1/2 D T100 °C	**C**
Flameproof Enclosure with IS Probe: CE, RCM, ATEX II 1 G EEx d[ia] IIC T6 ... T4, ATEX II 1/2 D T100 °C	**D**
Flameproof Enclosure with IS Probe, with WHG approval: CE, RCM, ATEX II 1/2 G EEx d[ia] IIC T6 ... T4, ATEX II 1/2 D T100 °C	**E**
Dust Ignition Proof with IS Probe: CSA/FM Class II, Div. 1, Groups E, F, G CSA/FM Class III T4	**F**
Explosion Proof Enclosure with IS Probe: CSA/FM Class I, Div. 1, Groups A, B, C, D CSA/FM Class II, Div. 1, Groups E, F, G CSA/FM Class III T4	**G**
General Purpose (CSA, FM)	**H**
General Purpose (CE, RCM)	**J**
General Purpose (CSA, FM, CE, RCM) with WHG approval	**K**
Enclosure and lid	
Aluminum epoxy coated	
2 x ½" NPT via adapter - cable inlet, IP65	**A**
2 x M20 x 1.5 cable inlet, IP65	**B**
2 x ½" NPT via adapter - cable inlet, IP68	**C**
2 x M20 x 1.5 cable inlet, IP68	**D**

1) Available with Approvals options F ... H.

Further designs	Order code
Please add "**-Z**" to Article No. and specify Order code(s).	
Total insertion length: enter the total insertion length in plain text description	**Y01**
Stainless steel tag [70 x 13 mm (2.75 x 0.5 inch)]: Measuring-point number/identification (max. 27 characters) specify in plain text	**Y15**
Manufacturer's test certificate: M to DIN 55350, Part 18 and ISO 9000	**C11**
Material inspection Certificate Type 3.1 per EN 10204	**C12**
SIL/IEC 61508 Declaration of Conformity [SIL 2 (overspill)]	**C20**
INMETRO[1)]	**E34**
Operating Instructions	
All literature is available to download for free, in a range of languages, at	
http://www.siemens.com/processinstrumentation/documentation	
Accessories	See page **4/41**

1) Available only with Approval options C, D, E.

© Siemens 2020

Options

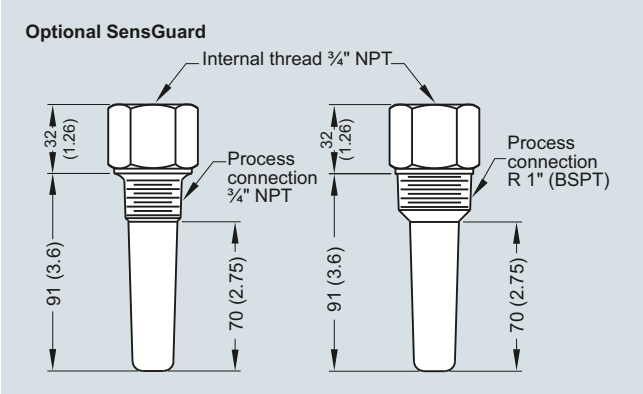

Optional SensGuard, dimensions in mm (inch)

Characteristic curves

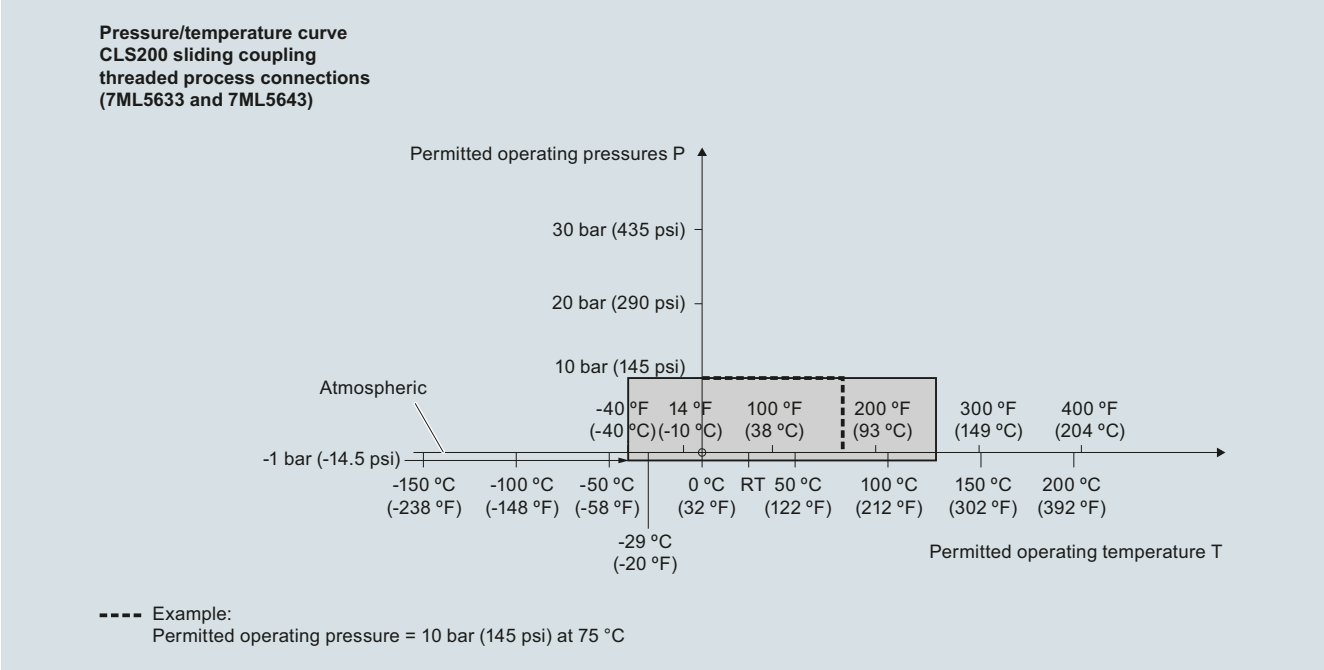

Pointek CLS200 process pressure/temperature derating curves (7ML5633 and 7ML5643)

© Siemens 2020

Characteristic curves (continued)

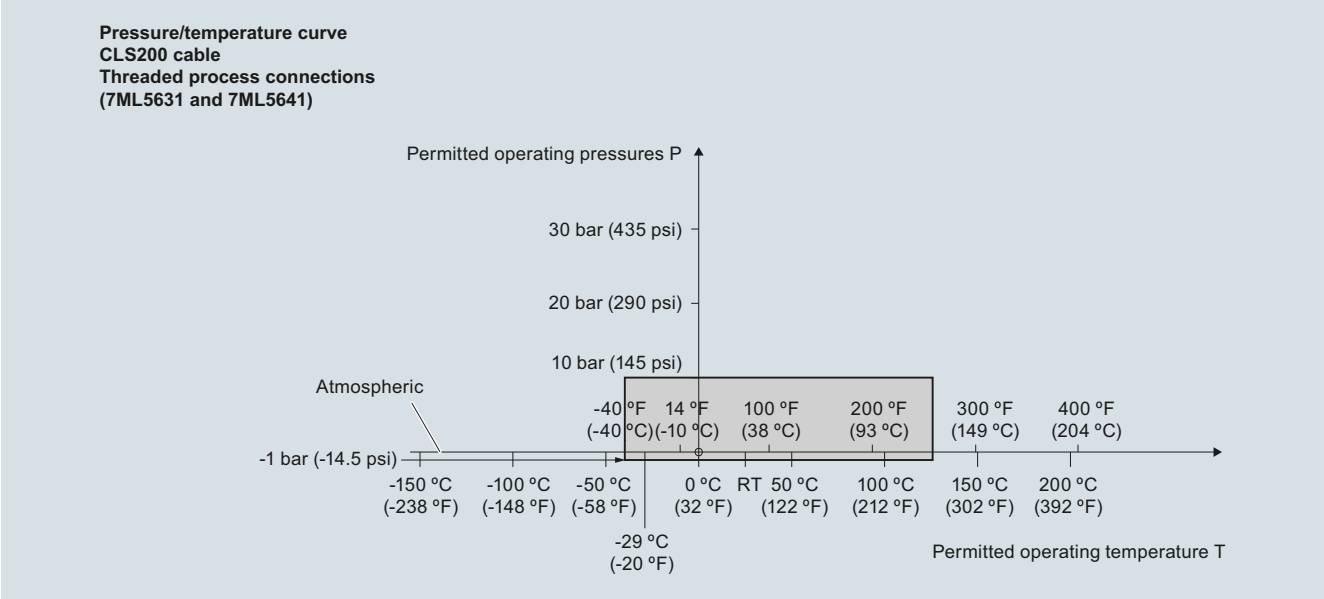

Pointek CLS200 process pressure/temperature derating curves (7ML5631 and 7ML5641)

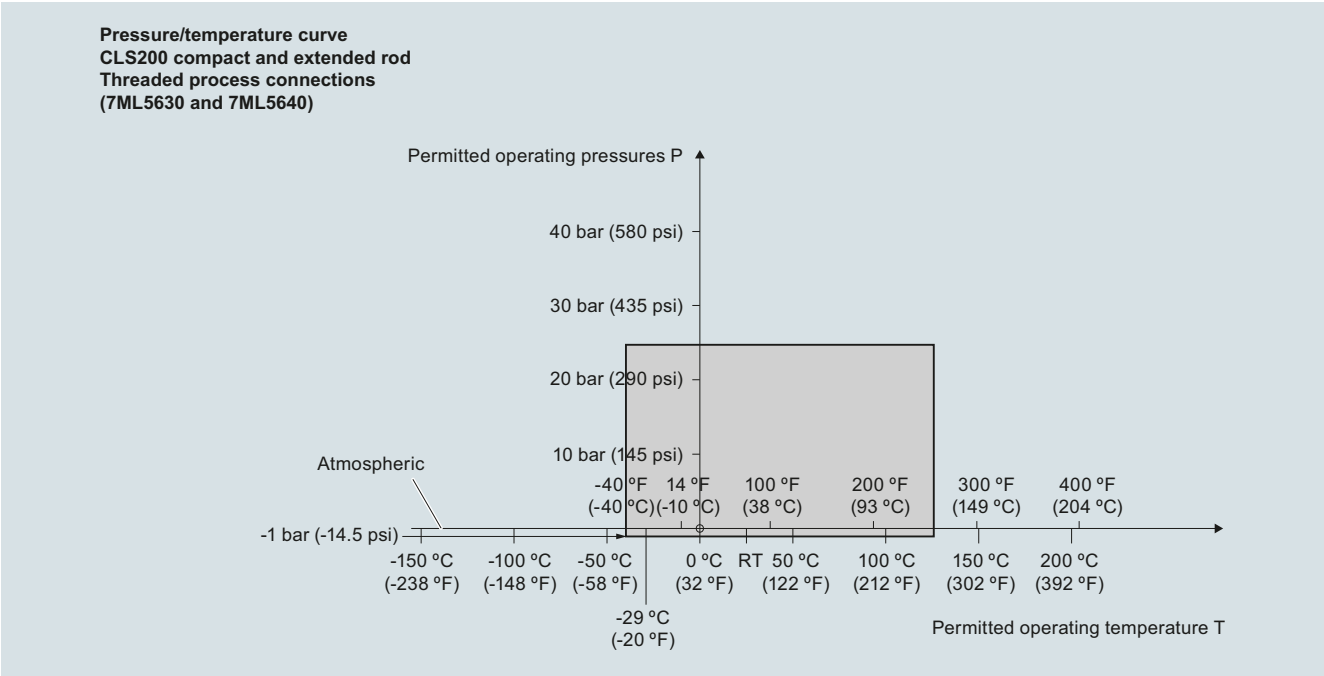

Pointek CLS200 process pressure/temperature derating curves (7ML5630 or 7ML5640)

© Siemens 2020

Characteristic curves (continued)

Pressure/temperature curve
CLS200 compact and extended sanitary type
Sanitary process connections
(7ML5632 and 7ML5642)

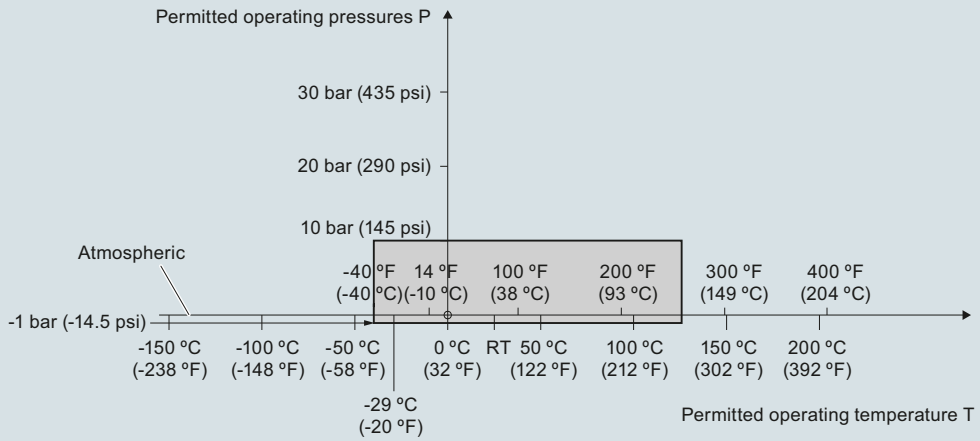

Pointek CLS200 process pressure/temperature derating curves (7ML5632 and 7ML5642)

Pressure/temperature curve
CLS200, cable
ASME flanged process connections
(7ML5631 and 7ML5641)

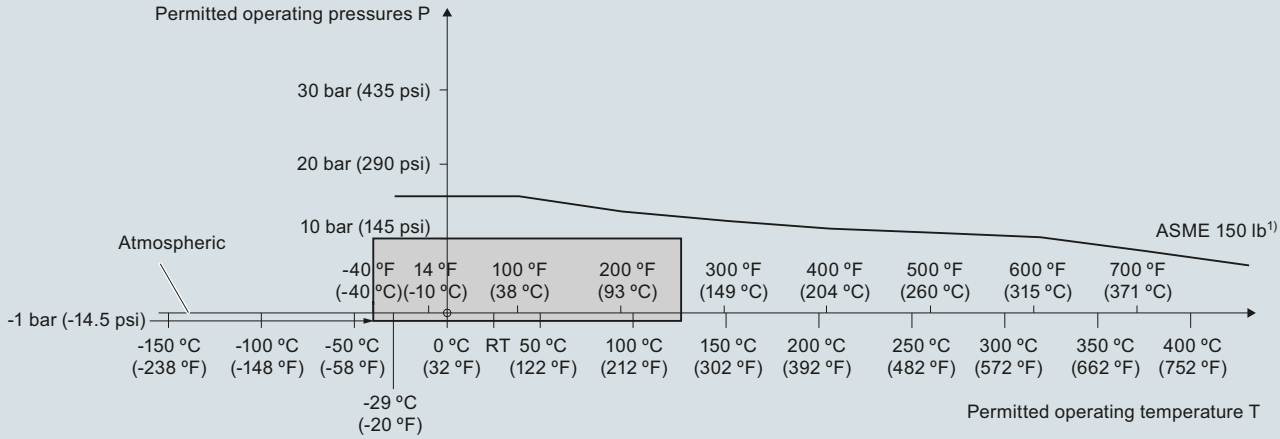

1) The curve denotes the minimum allowable flange class for the shaded area below.

Pointek CLS200 process pressure/temperature derating curves (7ML5631 and 7ML5641)

© Siemens 2020

Characteristic curves (continued)

Pressure/temperature curve
CLS200 compact and extended rod
ASME flanged process connections
(7ML5630 and 7ML5640)

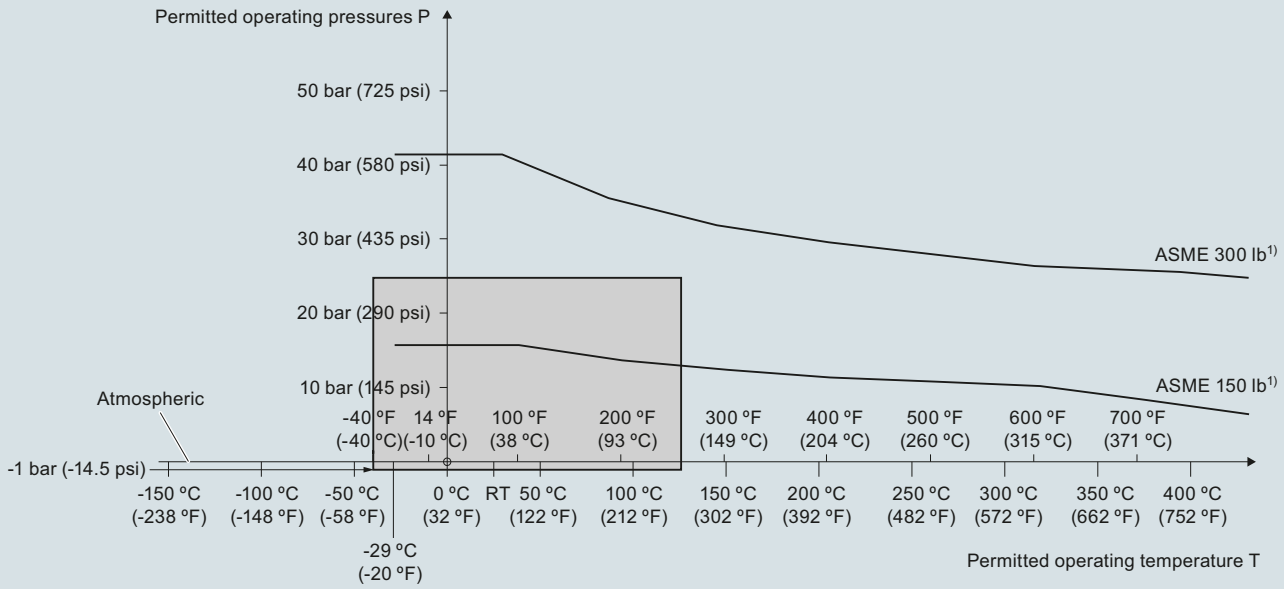

1) The curve denotes the minimum allowable flange class for the shaded area below.

Pointek CLS200 process pressure/temperature derating curves (7ML5630 and 7ML5640)

Pressure/temperature curve
CLS200 cable
EN flanged process connections
(7ML5631 and 7ML5641)

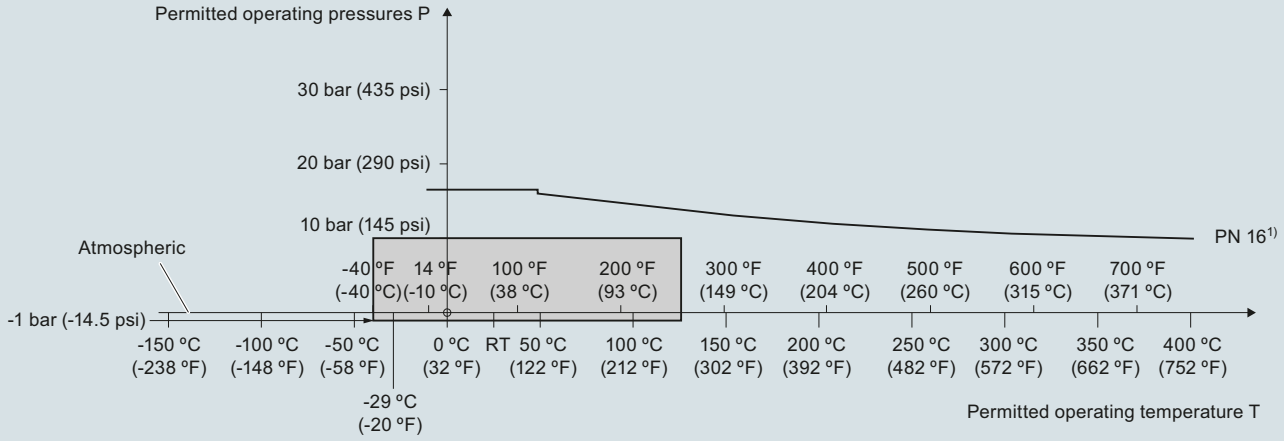

1) The curve denotes the minimum allowable flange class for the shaded area below.

Pointek CLS200 process pressure/temperature derating curves (7ML5631 and 7ML5641)

© Siemens 2020

Characteristic curves (continued)

Pressure/Temperature Curve
CLS200 Compact and Extended Rod
EN Flanged Process Connections
(7ML5630 and 7ML5640)

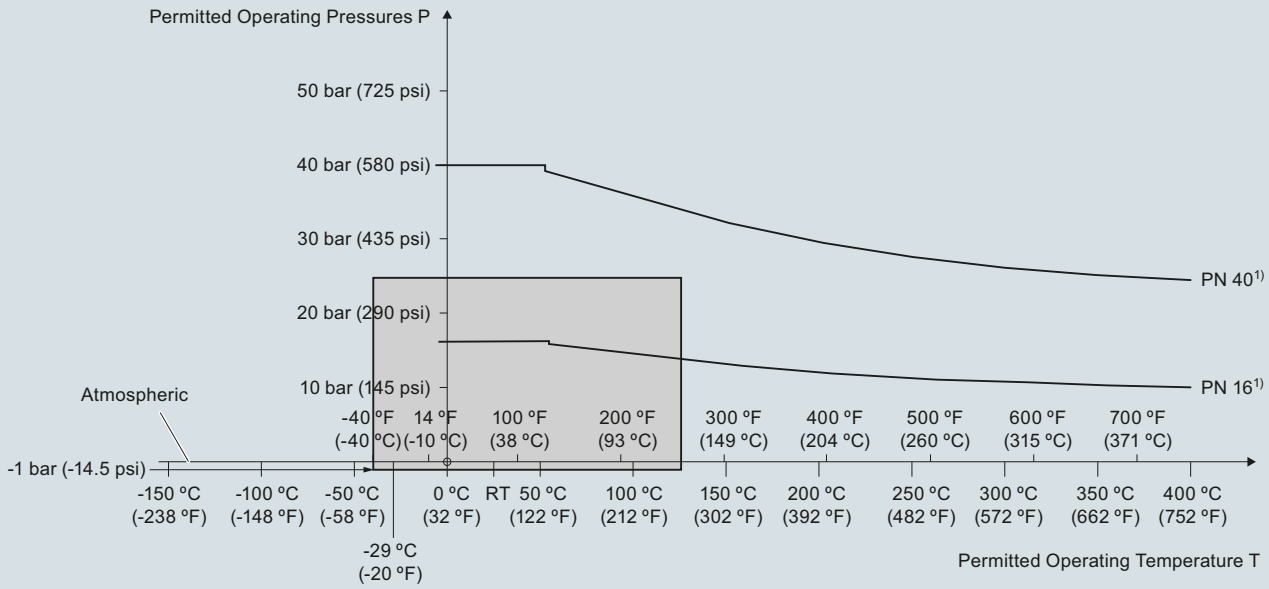

[1)] The curve denotes the minimum allowable flange class for the shaded area below.

Pointek CLS200 process pressure/temperature derating curves (7ML5630 and 7ML5640)

© Siemens 2020

Dimensional drawings

Compact version
Threaded
(7ML5630 and 7ML5640)

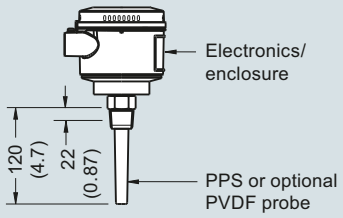

Extended rod version
Threaded
(7ML5630 and 7ML5640)

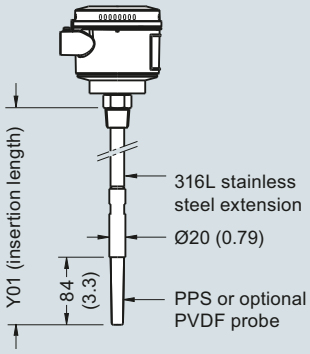

Min. insertion length = 200 (7.87)
Max. insertion length = 5 500 (216)

Extended cable version
Threaded
(7ML5631 and 7ML5641)

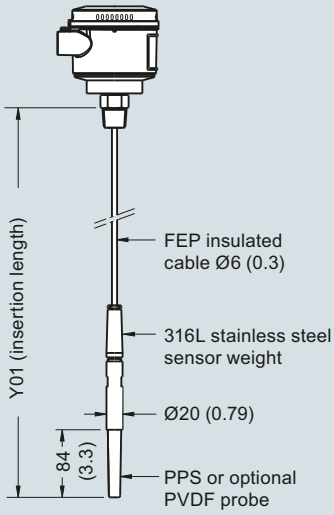

Min. insertion length = 500 (19.69)
Max. insertion length = 30 000 (1 181)
Applicable for liquids and solids applications. Cable can be shortened on site.

Sanitary compact version
Sanitary fitting
(7ML5632 and 7ML5642)

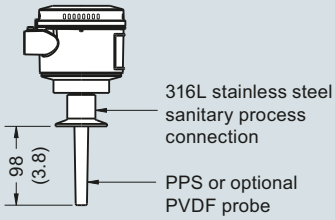

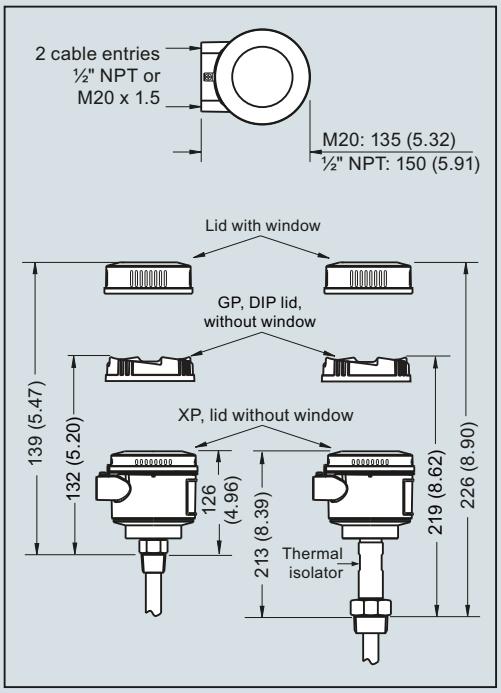

Sanitary extended version
Sanitary fitting
(7ML5632 and 7ML5642)

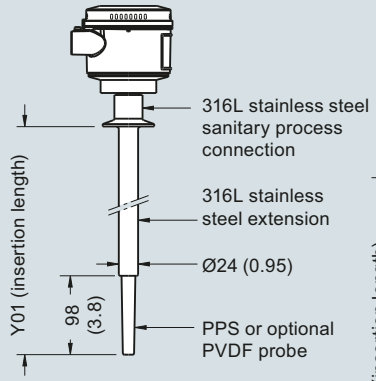

Min. insertion length = 110 (4.3)
Max. insertion length = 5 500 (216)

Sliding coupling version
Threaded
(7ML5633 and 7ML5643)

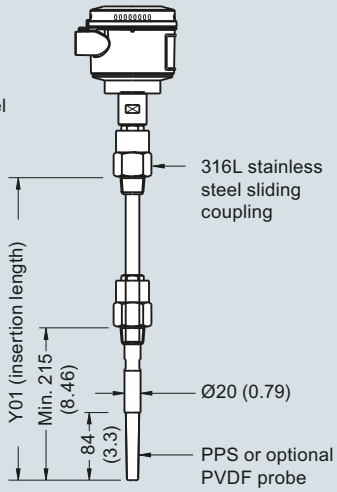

Min. insertion length = 350 (13.82)
Max. insertion length = 5 500 (216)

Pointek CLS200 threaded/sanitary process connection, dimensions in mm (inch)

© Siemens 2020

Dimensional drawings (continued)

Compact version
Welded Flange (7ML5630 and 7ML5640)
Welded Flange, PFA coated
(7ML5634 and 7ML5644)

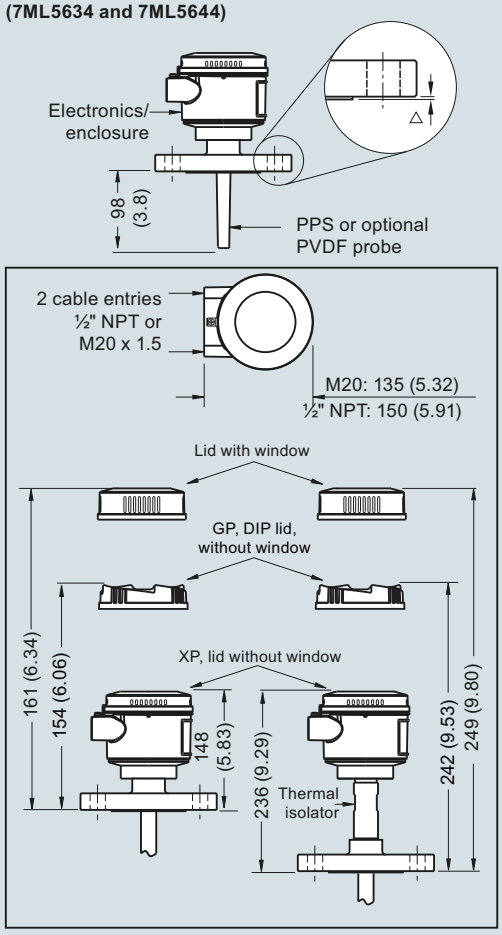

Extended rod version
Welded Flange (7ML5630 and 7ML5640)
Welded Flange, PFA coated
(7ML5634 and 7ML5644)

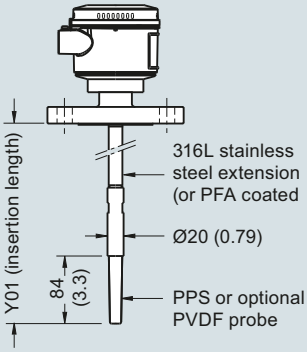

Min. insertion length = 200 (7.87)
Max. insertion length = 5 500 (216)

Extended cable version
Welded Flange
(7ML5631 and 7ML5641)

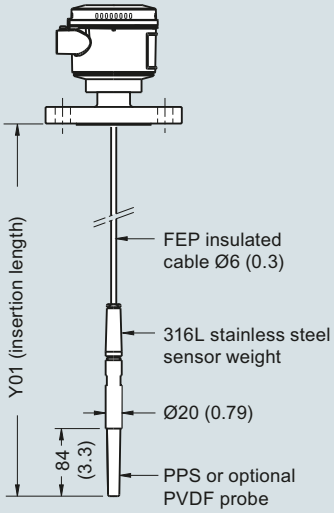

Min. insertion length = 500 (19.69)
Max. insertion length = 30 000 (1 181)
Applicable for liquids and solids applications. Cable can be shortened on site.

Flange Facing (raised face)	
Flange Class	**Facing thickness**
△ ASME 150/300	2 (0.08)
△ ASME 600/900	7 (0.28)
△ PN16/40	2 (0.08)

Insertion length does not include any raised face/gasket face dimension (see Flange Facing Table above)

Pointek CLS200 flanged process connections, dimensions in mm (inch)

© Siemens 2020

Circuit diagrams

Wiring: Pointek CLS200 standard

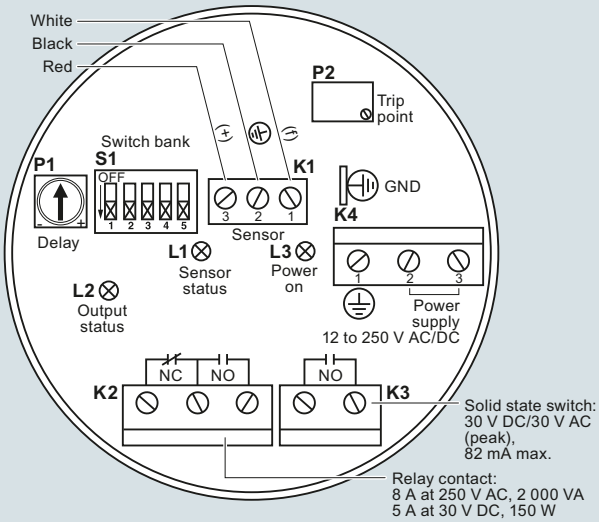

Notes:
- Identification label is on underside of lid. Switch and potentiometer settings are for illustration purposes only (refer to operation/setup in manual).
- All field wiring must have insulation suitable for at least 250 V.
- Relay contact terminals are for use with equipment having no accessible live parts and wiring having insulation suitable for at least 250 V.
- Maximum working voltage between adjacent relay contacts shall be 250 V.
- Refer to the Instruction Manual or contact Siemens representative for detailed wiring information.

Wiring: Pointek CLS200 Digital

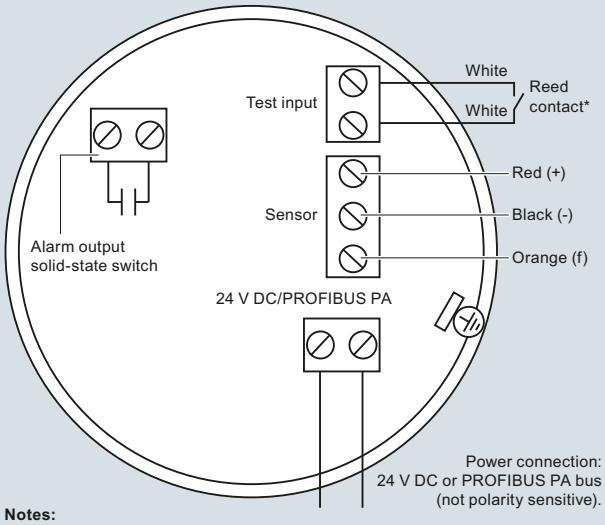

Notes:
Refer to the instruction manual or contact a Siemens representative for detailed wiring information.

***Magnet activated sensor Test**
A magnet can be used to test the sensor without opening the lid of the Pointek CLS200 Digital version. Bring the magnet close to the test area indicated on the enclosure. The sensor test starts and finishes automatically after 10 seconds.

Pointek CLS200 connections

© Siemens 2020

Overview

Pointek CLS200 (digital version) is a versatile inverse frequency shift capacitance level and material detection switch with optional rod/cable choices and configurable output. CLS200 is ideal for detection of liquids, solids, slurries, foam, and interfaces and has the ability to tune out buildup on the probe. The digital version includes PROFIBUS PA, an LCD display, and advanced diagnostic features.

Benefits

- Potted construction protects signal circuit from shock, vibration, humidity, and/or condensation
- High chemical resistance
- Level detection independent of tank or pipe earth reference
- Insensitive to product buildup due to high frequency oscillation
- High sensitivity allows installation in a wide range of liquids, solids or slurry applications
- Integral LCD display allows for easy menu-driven setup
- PROFIBUS PA communication (SIMATIC PDM compatible)

Application

Pointek CLS200 digital version provides an integral LCD display for stand-alone use, and also provides PROFIBUS PA communication (Profile version 3.0, Class B) for connection to a network.

The power supply is galvanically isolated and accepts a wide range of voltages (12 to 30 V DC). When used with thermal isolator, the stainless steel and PPS (PVDF optional) materials used in the probe construction provide a temperature rating up to 125 °C (257 °F) on the process wetted portion of the probe. The switch responds to any material with a dielectric constant of 1.5 or more by detecting a change in oscillating frequency, and it can be set to detect before contact or on contact with the probe. The menu-driven setup allows precise control of the switch point signal damping and alarm functions.

When connected to the PROFIBUS network, advanced diagnostics and set up using SIMATIC PDM are possible.

The CLS200 operates independently of the tank wall or pipe so it does not require an external reference electrode for level detection in a non-conductive vessel such as concrete or plastic (EMC regulations applicable in some regions).

- Key Applications: liquids, slurries, powders, granules, pressurized applications, hazardous areas

Configuration

Installation

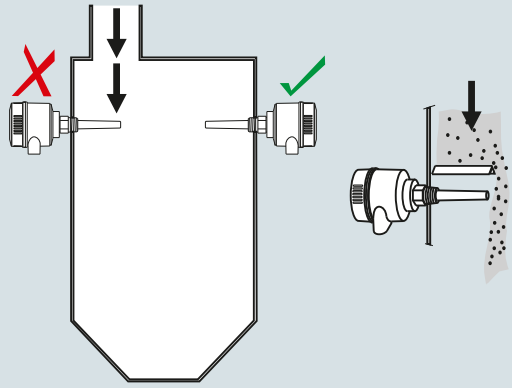

Keep unit out of path of falling material, or protect probe from falling material.

Avoid areas where material build up occurs.

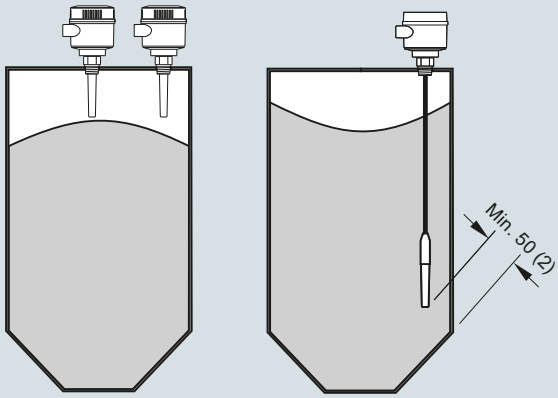

Install probe at least 50 (2) from tank wall.

Pointek CLS200 installation, dimensions in mm (inch)

© Siemens 2020

Technical specifications

Mode of operation	
Measuring principle	Inverse frequency shift capacitive level detection
Input	
Measured variable	Change in picoFarad (pF)
Output	
Output signal	
• Solid-state output	
- Output	Galvanically isolated
- Protection	Against reversed polarity (bipolar)
- Max. switching voltage	• 30 V (DC) • 30 V peak (AC)
- Max. load current	82 mA
- Voltage drop	< 1 V, typical at 50 mA
- Time delay (ON and/or OFF)	Programmable by user (0 ... 100 s)
• Fail-safe mode	Min. or max.
• Connection	Removable terminal block
Rated operating conditions[1]	
Installation conditions	
• Location	Indoor/outdoor
Ambient conditions	
• Ambient temperature	-40 ... +85 °C (-40 ... +185 °F)[2]
• Storage temperature	-40 ... +85 °C (-40 ... +185 °F)
• Installation category	II
• Pollution degree	4
Medium conditions	Liquids, bulk solids, slurries, and interfaces
• Relative dielectric constant ε_r	Min. 1.5
• Process temperature	
- Without thermal isolator	-40 ... +85 °C (-40 ... +185 °F)[2]
- With thermal isolator	-40 ... +125 °C (-40 ... +257 °F)
• Process pressure (rod version)	-1 ... +25 bar g (-14.6 ... +365 psi g) (nominal)
• Process pressure (cable version)[3]	-1 ... +10 bar g (-14.6 ... +150 psi g) (nominal)
• Process pressure (sliding coupling version)	-1 ... +10 bar g (-14.6 ... +150 psi g) (nominal)
Design	
Material	
• Enclosure	Epoxy-coated aluminum with gasket
• Optional thermal isolator	316L stainless steel
Connection	Removable terminal block, max. 2.5 mm²
Degree of protection	IP65/Type 4/NEMA 4 (optional IP68)
Cable inlet	2 x M20 x 1.5 thread (option: 2 x ½" NPT conduit entry including 1 plugged entry)
Electromagnetic compatibility	To comply with CE EMC regulations (where applicable); the CLS200 should be installed per the instruction manual.

Power supply	
Bus voltage	Standard: 12 ... 30 V DC Intrinsically Safe: 12 ... 24 V DC
Current consumption	12.5 mA
Certificates and approvals	
General Purpose	CSA, FM, CE, RCM
Dust Ignition Proof	ATEX II 1/2 D T100 °C
Dust Ignition Proof with IS Probe	CSA/FM Class II, Div. 1, Groups E, F, G CSA/FM Class III T4
Flameproof Enclosure with IS Probe	ATEX II 1/2 G EEx d[ia] IIC T6 ... T4 ATEX II ½ D T100 °C
Explosion Proof with IS Probe	CSA/FM Class I, Div. 1, Groups A, B, C, D CSA/FM Class II, Div. 1, Groups E, F, G CSA/FM Class III T4
Intrinsically Safe[4]	ATEX II 1 G EEx ia IIC T6 ... T4 ATEX II ½ D IP6X T100 °C CSA/FM Class I, Div. 1, Groups A, B, C, D CSA/FM Class II, Div. 1, Groups E, F, G CSA/FM Class III T4
Non-incendive	CSA/FM Class I, Div. 2, Groups A, B, C, D CSA/FM Class II, Div. 2, Groups F, G CSA/FM Class III T4 or T6
Non-Sparking	ATEX II 3 G Ex nA II T6 ... T4 ATEX II 2 D IP6X T100 °C
Marine	Lloyds Register of Shipping, Categories ENV1, ENV2, and ENV5
Others	Pattern Approval (China)
Communication	PROFIBUS PA (IEC 61158 CPF3 CP3/2) Bus physical layer: IEC 61158-2 MBP (IS) Device profile: PROFIBUS PA profile for Process Control Devices Version 3.0, Class B FISCO field device

1) When operation is in areas classified as hazardous, observe restrictions according to relevant certificate. See also Pressure/Temperature curves on page 5/36.

2) Thermal isolator is used if process connection temperature exceeds 85 °C (185 °F)

3) Pressure rating of process seal is temperature dependent. See Pressure/Temperature curves on page 5/34.

4) Barrier or Intrinsically Safe power supply required for Intrinsically Safe protection

© Siemens 2020

Technical specifications (continued)

Design: Probe				
	Rod version	**Sanitary version**	**Cable version**	**Sliding Coupling version**
Max. length	5 500 mm (216.53 inch)	5 500 mm (216.53 inch)	• 30 000 mm (1 181.1 inch) liquids and slurries • 5 000 mm (196.85 inch) solids (under loads)	5 500 mm (216.53 inch)
Process connection	R ¾", 1", 1¼", 1½" [(BSPT), EN 10226/PT (JIS-T), JIS B 0203] ¾", 1", 1¼", 1½" NPT [(Taper), ANSI/ASME B1.20.1] G ¾", 1", 1½" [(BSPP), EN ISO 228-1/PF (JIS-P), JIS B 0202] 316L stainless steel ASME/EN flange	1½", 2" sanitary fitting clamp 316L stainless steel	R ¾", ", 1¼", 1½" [(BSPT), EN 10226/PT (JIS-T), JIS B 0203] ¾", 1", 1¼", 1½" NPT [(Taper), ANSI/ASME B1.20.1] G ¾", 1", 1½" [(BSPP), EN ISO 228-1/PF (JIS-P), JIS B 0202] 316L stainless steel ASME/EN flange	R ¾", 1", 1¼", 1½" [(BSPT), EN 10226/PT (JIS-T), JIS B 0203] ¾", 1", 1¼", 1½" NPT [(Taper), ANSI/ASME B1.20.1] G ¾", 1", 1½" [(BSPP), EN ISO 228-1/PF (JIS-P), JIS B 0202]
Extension material	316L stainless steel optional PFA coated[1)]	316L stainless steel	Fluoroethylene propylene (FEP) cable with stainless steel core	316L stainless steel
Sensor wetted parts	PPS (optional PVDF)	PPS (optional PVDF)	PPS (optional PVDF)	PPS (optional PVDF)
O-ring seal material	FKM (optional FFKM)[2)]	FKM (optional FFKM)[2)]	FKM (optional FFKM)[2)]	FKM (optional FFKM)[2)]
Thermal isolator[3)]	Optional	Optional	Optional	Optional
Extension	User selected length	User selected length	Cable extension	User selected length

1) [1]PFA coating (7ML5634 and 7ML5644) has 120 micron thickness

2) For caustic materials, consult a local sales person for alternative O-rings. For more information, please visit http://www.automation.siemens.com/aspa_app.

3) Thermal isolator is used if process connection temperature exceeds 85 °C (185 °F).

© Siemens 2020

Selection and ordering data

	Article No.
Pointek CLS200 RF Capacitance point level switch, digital, rod design ↗	**7ML5640-** ■ ■ ■ ■ ■ - ■ ■ ■ **0**
Detects level and interface in liquids, solids, slurries, and foam. Adjustable, 5.5 m (18.04 ft), insertion, adaptable sensitivity, with the ability to tune out build-up on probe. With display and digital communications.	
↗ Click on the Article No. for the online configuration in the PIA Life Cycle Portal.	
Process connection	
Threaded, 316L stainless steel	
¾" NPT [(Taper), ANSI/ASME B1.20.1]	**0 A**
1" NPT [(Taper), ANSI/ASME B1.20.1]	**0 B**
1¼" NPT [(Taper), ANSI/ASME B1.20.1]	**0 C**
1½" NPT [(Taper), ANSI/ASME B1.20.1]	**0 D**
R ¾" [(BSPT), EN 10226/PT (JIS-T), JIS B 0203]	**1 A**
R 1" [(BSPT), EN 10226/PT (JIS-T), JIS B 0203]	**1 B**
R 1½" [(BSPT), EN 10226/PT (JIS-T), JIS B 0203]	**1 D**
G ¾" [(BSPP), EN ISO 228-1/PF (JIS-P), JIS B 0202]	**3 A**
G 1" [(BSPP), EN ISO 228-1/PF (JIS-P), JIS B 0202]	**3 B**
G 1½" [(BSPP), EN ISO 228-1/PF (JIS-P), JIS B 0202]	**3 D**
Welded flange, 316L stainless steel, raised face	
1" ASME, 150 lb	**5 A**
1" ASME, 300 lb	**5 B**
1" ASME, 600 lb	**5 C**
1½" ASME, 150 lb	**5 D**
1½" ASME, 300 lb	**5 E**
1½" ASME, 600 lb	**5 F**
2" ASME, 150 lb	**5 G**
2" ASME, 300 lb	**5 H**
2" ASME, 600 lb	**5 J**
3" ASME, 150 lb	**5 K**
3" ASME, 300 lb	**5 L**
3" ASME, 600 lb	**5 M**
4" ASME, 150 lb	**5 N**
4" ASME, 300 lb	**5 P**
4" ASME, 600 lb	**5 Q**
Welded flange, 316L stainless steel, Type A flat faced	
DN 25, PN 16	**6 A**
DN 25, PN 40	**6 B**
DN 40, PN 16	**6 C**
DN 40, PN 40	**6 D**
DN 50, PN 16	**6 E**
DN 50, PN 40	**6 F**
DN 80, PN 16	**6 G**
DN 80, PN 40	**6 H**
DN 100, PN 16	**6 J**
DN 100, PN 40	**6 K**
(Note: flange bolting patterns and facings dimensionally correspond to the applicable ASME B16.5 or EN 1092-1 standard.)	
Probe length	
(length from flange face) (threaded lengths include process thread)	
Note: No Y01 needed in Order code for standard lengths	
Compact [threaded 120 mm (4.72 inch), Flanged 98 mm (3.86 inch)]	**A**
Extended rod, 250 mm (9.84 inch)	**B**
Extended rod, 350 mm (13.78 inch)	**C**
Extended rod, 500 mm (19.69 inch)	**D**
Extended rod, 750 mm (29.53 inch)	**E**
Extended rod, 1 000 mm (39.37 inch)	**F**
Extended rod, 1 250 mm (49.21 inch)	**G**
Extended rod, 1 350 mm (53.15 inch)	**H**
Extended rod, 1 500 mm (59.06 inch)	**J**
Extended rod, 1 750 mm (68.90 inch)	**K**
Extended rod, 2 000 mm (78.74 inch)	**L**

	Article No.
Pointek CLS200 RF Capacitance point level switch, digital, rod design	**7ML5640-** ■ ■ ■ ■ ■ - ■ ■ ■ **0**
Detects level and interface in liquids, solids, slurries, and foam. Adjustable, 5.5 m (18.04 ft), insertion, adaptable sensitivity, with the ability to tune out build-up on probe. With display and digital communications.	
Add Order code Y01 and plain text: "Insertion length ... mm"	
Extended rod, 210 ... 1 000 mm (8.27 ... 39.37 inch)	**M**
Extended rod, 1 001 ... 2 000 mm (39.41 ... 78.74 inch)	**N**
Extended rod, 2 001 ... 3 000 mm (78.78 ... 118.11 inch)	**P**
Extended rod, 3 001 ... 4 000 mm (118.15 ... 157.48 inch)	**Q**
Extended rod, 4 001 ... 5 000 mm (157.52 ... 196.85 inch)	**R**
Extended rod, 5 001 ... 5 500 mm (196.89 ... 216.53 inch)	**S**
Thermal isolator	
Without thermal isolator	**0**
With thermal isolator [for process connection temperatures over 85 °C (185 °F)]	**1**
Remote mount electronics and mounting bracket	
With 2 m (79 inch) of cable[2]	**2**
With 5 m (197 inch) of cable[2]	**3**
Wetted seals	
FKM	**0**
FFKM [for process temperatures above -20 °C (-4 °F)]	**1**
Probe material	
316L stainless steel with PPS probe body	**0**
316L stainless steel with PVDF probe body	**1**
Approvals	
Non-Sparking: CE, RCM, ATEX II 3 G Ex nA II T6 ... T4, ATEX II 2 D IP6X T100 °C	**B**
Dust Ignition Proof: CE, RCM, ATEX II ½ D T100 °C	**C**
Intrinsically Safe:[1] CE, RCM, ATEX II 1 G EEx ia IIC T6 ... T4, ATEX II ½ D IP6X T100 °C	**D**
Flameproof Enclosure with IS Probe: CE, RCM, ATEX II ½ G EEx d[ia] IIC T6 ... T4, ATEX II ½ D T100 °C	**E**
Non-incendive: CSA/FM Class I, Div. 2, Groups A, B, C, D CSA/FM Class II, Div. 2, Groups F, G CSA/FM Class III T4 or T6	**F**
Dust Ignition Proof with IS Probe: CSA/FM Class II, Div. 1, Groups E, F, G CSA/FM Class III T4	**G**
Intrinsically Safe:[1] CSA/FM Class I, Div. 1, Groups A, B, C, D CSA/FM Class II, Div. 1, Groups E, F, G CSA/FM Class III T4	**H**
Explosion Proof with IS Probe: CSA/FM Class I, Div. 1, Groups A, B, C, D CSA/FM Class II, Div. 1, Groups E, F, G CSA/FM Class III T4	**J**
General Purpose (CSA, FM)	**K**
General Purpose (CE, RCM)	**L**
Enclosure and lid	
Aluminum epoxy coated	
2 x ½" NPT via adapter - cable inlet, IP65	**A**
2 x M20 x 1.5 cable inlet, IP65	**B**
2 x ½" NPT via adapter - cable inlet, IP68	**C**
2 x M20 x 1.5 cable inlet, IP68	**D**

[1] Barrier or Intrinsically Safe power supply required for Intrinsically Safe protection.

[2] Available with Approvals options F, G, H, J, and K.

© Siemens 2020

Selection and ordering data

	Order code
Further designs	
Please add "**-Z**" to Article No. and specify Order code(s).	
Total insertion length: enter the total insertion length in plain text description	**Y01**
Stainless steel tag [70 x 13 mm (2.75 x 0.5 inch)]: Measuring-point number/identification (max. 27 characters) specify in plain text	**Y15**
Manufacturer's test certificate: M to DIN 55350, Part 18 and ISO 9000	**C11**
Material inspection certificate Type 3.1 per EN 10204	**C12**
INMETRO[1)]	**E34**
Operating Instructions	
All literature is available to download for free, in a range of languages, at	
http://www.siemens.com/processinstrumentation/documentation	
Accessories	See page 4/41

[1)] Available only with Approvals options C and E.

	Article No.
Pointek CLS200 RF Capacitance point level switch, digital, cable design ↗	**7ML5641-** ■ ■ ■ ■ ■ - ■ ■ ■ **0**
Detects level and interface in liquids, solids, slurries, and foam. Cable extension options to 30 m (98.43 ft), adaptable sensitivity, with the ability to tune out build-up on probe. With display and digital communications.	
↗ Click on the Article No. for the online configuration in the PIA Life Cycle Portal.	
Process connection	
Threaded, 316L stainless steel	
¾" NPT [(Taper), ANSI/ASME B1.20.1]	**0 A**
1" NPT [(Taper), ANSI/ASME B1.20.1]	**0 B**
1¼" NPT [(Taper), ANSI/ASME B1.20.1]	**0 C**
1½" NPT [(Taper), ANSI/ASME B1.20.1]	**0 D**
R ¾" [(BSPT), EN 10226/PT (JIS-T), JIS B 0203]	**1 A**
R 1" [(BSPT), EN 10226/PT (JIS-T), JIS B 0203]	**1 B**
R 1½" [(BSPT), EN 10226/PT (JIS-T), JIS B 0203]	**1 D**
G ¾" [(BSPP), EN ISO 228-1/PF (JIS-P), JIS B 0202]	**3 A**
G 1" [(BSPP), EN ISO 228-1/PF (JIS-P), JIS B 0202]	**3 B**
G 1½" [(BSPP), EN ISO 228-1/PF (JIS-P), JIS B 0202]	**3 D**
Welded flange, 316L stainless steel, raised face	
1" ASME, 150 lb	**5 A**
1" ASME, 300 lb	**5 B**
1" ASME, 600 lb	**5 C**
1½" ASME, 150 lb	**5 D**
1½" ASME, 300 lb	**5 E**
1½" ASME, 600 lb	**5 F**
2" ASME, 150 lb	**5 G**
2" ASME, 300 lb	**5 H**
2" ASME, 600 lb	**5 J**
3" ASME, 150 lb	**5 K**
3" ASME, 300 lb	**5 L**
3" ASME, 600 lb	**5 M**
4" ASME, 150 lb	**5 N**
4" ASME, 300 lb	**5 P**
4" ASME, 600 lb	**5 Q**
Welded flange, 316L stainless steel, Type A flat faced	
DN 25, PN 16	**6 A**
DN 25, PN 40	**6 B**
DN 40, PN 16	**6 C**
DN 40, PN 40	**6 D**
DN 50, PN 16	**6 E**
DN 50, PN 40	**6 F**
DN 80, PN 16	**6 G**
DN 80, PN 40	**6 H**
DN 100, PN 16	**6 J**
DN 100, PN 40	**6 K**
(Note: flange bolting patterns and facings dimensionally correspond to the applicable ASME B16.5 or EN 1092-1 standard.)	

© Siemens 2020

Selection and ordering data

	Article No.
Pointek CLS200 RF Capacitance point level switch, digital, cable design Detects level and interface in liquids, solids, slurries, and foam. Cable extension options to 30 m (98.43 ft), adaptable sensitivity, with the ability to tune out build-up on probe. With display and digital communications.	**7ML5641-** ■ ■ ■ ■ ■ - ■ ■ ■ **0**
Probe length	
(length from flange face) (threaded lengths include process thread)	
Note: No Y01 needed in Order code for standard lengths	
Extended cable, 3 000 mm (118.11 inch), length can be determined by customer on assembly	**A**
Extended cable, 6 000 mm (236.22 inch), length can be determined by customer on assembly	**B**
Add Order code Y01 and plain text: "Insertion length ... mm"	
Extended cable, 500 ... 5 000 mm (19.69 ... 196.85 inch)	**C**
Extended cable, 5 001 ... 10 000 mm (196.89 ... 393.70 inch)	**D**
Extended cable, 10 001 ... 15 000 mm (393.74 ... 590.55 inch)	**E**
Extended cable, 15 001 ... 20 000 mm (590.59 ... 787.40 inch)	**F**
Extended cable, 20 001 ... 25 000 mm (787.44 ... 984.25 inch)	**G**
Extended cable, 25 001 ... 30 000 mm (984.29 ... 1 181.10 inch)	**H**
Thermal isolator	
Without thermal isolator	**0**
With thermal isolator [for process connection temperatures over 85 °C (185 °F)]	**1**
Remote mount electronics and mounting bracket	
With 2 m (79 inch) of cable[2]	**2**
With 5 m (197 inch) of cable[2]	**3**
Wetted seals	
FKM and PTFE	**0**
FFKM and PTFE [for process temperatures above -20 °C (-4 °F)]	**1**
Probe material	
FEP jacketed cable with PPS probe body	**0**
FEP jacketed cable with PVDF probe body	**1**
Approvals	
Non-Sparking: CE, RCM, ATEX II 3 G Ex nA II T6 ... T4, ATEX II 2 D IP6X T100 °C	**B**
Dust Ignition Proof: CE, RCM, ATEX II ½ D T100 °C	**C**
Intrinsically Safe:[1] CE, RCM, ATEX II 1 G EEx ia IIC T6 ... T4, ATEX II ½ D IP6X T100 °C	**D**
Flameproof Enclosure with IS Probe: CE, RCM, ATEX II ½ G EEx d[ia] IIC T6 ... T4, ATEX II ½ D T100 °C	**E**
Non-incendive: CSA/FM Class I, Div. 2, Groups A, B, C, D CSA/FM Class II, Div. 2, Groups F, G CSA/FM Class III T4 or T6	**F**
Dust Ignition Proof with IS Probe: CSA/FM Class II, Div. 1, Groups E, F, G CSA/FM Class III T4	**G**
Intrinsically Safe:[1] CSA/FM Class I, Div. 1, Groups A, B, C, D CSA/FM Class II, Div. 1, Groups E, F, G CSA/FM Class III T4	**H**
Explosion Proof with IS Probe: CSA/FM Class I, Div. 1, Groups A, B, C, D CSA/FM Class II, Div. 1, Groups E, F, G CSA/FM Class III T4	**J**
General Purpose (CSA, FM)	**K**
General Purpose (CE, RCM)	**L**

	Article No.
Pointek CLS200 RF Capacitance point level switch, digital, cable design Detects level and interface in liquids, solids, slurries, and foam. Cable extension options to 30 m (98.43 ft), adaptable sensitivity, with the ability to tune out build-up on probe. With display and digital communications.	**7ML5641-** ■ ■ ■ ■ ■ - ■ ■ ■ **0**
Enclosure and lid	
Aluminum epoxy coated	
2 x ½" NPT via adapter - cable inlet, IP65	**A**
2 x M20 x 1.5 cable inlet, IP65	**B**
2 x ½" NPT via adapter - cable inlet, IP68	**C**
2 x M20 x 1.5 cable inlet, IP68	**D**

1) Barrier or Intrinsically Safe power supply required for Intrinsically Safe protection.

2) Available with Approvals options F, G, H, J, and K.

Further designs	Order code
Please add "**-Z**" to Article No. and specify Order code(s).	
Total insertion length: enter the total insertion length in plain text description	**Y01**
Stainless steel tag [70 x 13 mm (2.75 x 0.5 inch)]: Measuring-point number/identification (max. 27 characters) specify in plain text	**Y15**
Manufacturer's test certificate: M to DIN 55350, Part 18 and ISO 9000	**C11**
Material inspection Certificate Type 3.1 per EN 10204	**C12**
INMETRO[1]	**E34**
Operating Instructions	
All literature is available to download for free, in a range of languages, at	
http://www.siemens.com/processinstrumentation/documentation	
Accessories	See page 4/41

1) Available only with Approvals options C and E.

© Siemens 2020

Selection and ordering data

	Article No.								
Pointek CLS200 RF Capacitance point level switch, digital, sanitary rod design. ↗	**7ML5642-**					-			**0**
Detects level and interface in liquids, solids, slurries, and foam. Adjustable, 5.5 m (18.04 ft), insertion, adaptable sensitivity, with the ability to tune out build-up on probe. With display and digital communications.									
↗ Click on the Article No. for the online configuration in the PIA Life Cycle Portal.									
Process connection									
Sanitary 316L stainless steel									
1" sanitary fitting clamp	**8**	**A**							
1½" sanitary fitting clamp	**8**	**B**							
2" sanitary fitting clamp	**8**	**C**							
2½" sanitary fitting clamp	**8**	**D**							
3" sanitary fitting clamp	**8**	**E**							
(Note: Sanitary connection dimensionally corresponds to the applicable ISO 2852 standard.)									
Probe length									
(length from process connection face)									
Note: No Y01 needed in Order code for standard lengths									
Compact, 98 mm (3.86 inch)			**A**						
Extended rod, 250 mm (9.84 inch)			**B**						
Extended rod, 350 mm (13.78 inch)			**C**						
Extended rod, 500 mm (19.69 inch)			**D**						
Extended rod, 750 mm (29.53 inch)			**E**						
Extended rod, 1 000 mm (39.37 inch)			**F**						
Extended rod, 1 250 mm (49.21 inch)			**G**						
Extended rod, 1 350 mm (53.15 inch)			**H**						
Extended rod, 1 500 mm (59.06 inch)			**J**						
Extended rod, 1 750 mm (68.90 inch)			**K**						
Extended rod, 2 000 mm (78.74 inch)			**L**						
Add Order code Y01 and plain text: "Insertion length ... mm"									
Extended rod, 110 ... 350 mm (4.3 ... 13.78 inch)			**M**						
Extended rod, 351 ... 1 000 mm (13.82 ... 39.37 inch)			**N**						
Extended rod, 1 001 ... 2 000 mm (39.41 ... 78.74 inch)			**P**						
Extended rod, 2 001 ... 3 000 mm (78.78 ... 118.11 inch)			**Q**						
Extended rod, 3 001 ... 4 000 mm (118.15 ... 157.48 inch)			**R**						
Extended rod, 4 001 ... 5 000 mm (157.52 ... 196.85 inch)			**S**						
Extended rod, 5 001 ... 5 500 mm (196.89 ... 216.53 inch)			**T**						
Thermal isolator									
Without thermal isolator				**0**					
With thermal isolator [for process connection temperatures over 85 °C (185 °F)]				**1**					
Remote mount electronics and mounting bracket									
With 2 m (79 inch) of cable[2]				**2**					
With 5 m (197 inch) of cable[2]				**3**					
Wetted seals									
FKM					**0**				
FFKM [for process temperatures above -20 °C (-4 °F)]					**1**				
Probe material									
316L stainless steel with PPS probe body							**0**		
316L stainless steel with PVDF probe body							**1**		
Approvals									
Non-Sparking: CE, RCM, ATEX II 3 G Ex nA II T6 ... T4, ATEX II 2 D IP6X T100 °C								**B**	
Dust Ignition Proof: CE, RCM, ATEX II ½ D T100 °C								**C**	
Intrinsically Safe:[1] CE, RCM, ATEX II 1 G EEx ia IIC T6 ... T4, ATEX II ½ D IP6X T100 °C								**D**	
Flameproof Enclosure with IS Probe: CE, RCM, ATEX II ½ G EEx d[ia] IIC T6 ... T4, ATEX II ½ D T100 °C								**E**	

	Article No.								
Pointek CLS200 RF Capacitance point level switch, digital, sanitary rod design.	**7ML5642-**					-			**0**
Detects level and interface in liquids, solids, slurries, and foam. Adjustable, 5.5 m (18.04 ft), insertion, adaptable sensitivity, with the ability to tune out build-up on probe. With display and digital communications.									
Non-incendive: CSA/FM Class I, Div. 2, Groups A, B, C, D CSA/FM Class II, Div. 2, Groups F, G CSA/FM Class III T4 or T6							**F**		
Dust Ignition Proof with IS Probe: CSA/FM Class II, Div. 1, Groups E, F, G CSA/FM Class III T4							**G**		
Intrinsically Safe:[1] CSA/FM Class I, Div. 1, Groups A, B, C, D CSA/FM Class II, Div. 1, Groups E, F, G CSA/FM Class III T4							**H**		
Explosion Proof with IS Probe: CSA/FM Class I, Div. 1, Groups A, B, C, D CSA/FM Class II, Div. 1, Groups E, F, G CSA/FM Class III T4							**J**		
General Purpose (CSA, FM)							**K**		
General Purpose (CE, RCM)							**L**		
Enclosure and lid									
Aluminum epoxy coated									
2 x ½" NPT via adapter - cable inlet, IP65								**A**	
2 x M20 x 1.5 cable inlet, IP65								**B**	
2 x ½" NPT via adapter - cable inlet, IP68								**C**	
2 x M20 x 1.5 cable inlet, IP68								**D**	

1) Barrier or Intrinsically Safe power supply required for Intrinsically Safe protection.

2) Available with Approvals options F, G, H, J, and K.

Further designs	Order code
Please add "**-Z**" to Article No. and specify Order code(s).	
Total insertion length: enter the total insertion length in plain text description	**Y01**
Stainless steel tag [70 x 13 mm (2.75 x 0.5 inch)]: Measuring-point number/identification (max. 27 characters) specify in plain text	**Y15**
Manufacturer's test certificate: M to DIN 55350, Part 18 and ISO 9000	**C11**
Material inspection Certificate Type 3.1 per EN 10204	**C12**
INMETRO[1]	**E34**
Operating Instructions	
All literature is available to download for free, in a range of languages, at	
http://www.siemens.com/processinstrumentation/documentation	
Accessories	See page 4/41

1) Available only with Approvals options C and E.

© Siemens 2020

Selection and ordering data

	Article No.								
Pointek CLS200 RF Capacitance point level switch, digital, sliding coupling design. ↗	**7ML5643-**								
Detects level and interface in liquids, solids, slurries, and, foam. Adjustable, 5.5 m (18.04 ft), insertion, adaptable sensitivity, with the ability to tune out build-up on probe. With display and digital communications.	■	■	■	■	■	-	■	■	■ 0
↗ Click on the Article No. for the online configuration in the PIA Life Cycle Portal.									
Process connection									
Threaded, 316L stainless steel									
¾" NPT [(Taper), ANSI/ASME B1.20.1]	0	A							
1" NPT [(Taper), ANSI/ASME B1.20.1]	0	B							
1¼" NPT [(Taper), ANSI/ASME B1.20.1]	0	C							
1½" NPT [(Taper), ANSI/ASME B1.20.1]	0	D							
R ¾" [(BSPT), EN 10226/PT (JIS-T), JIS B 0203]	1	A							
R 1" [(BSPT), EN 10226/PT (JIS-T), JIS B 0203]	1	B							
R 1½" [(BSPT), EN 10226/PT (JIS-T), JIS B 0203]	1	D							
G ¾" [(BSPP), EN ISO 228-1/PF (JIS-P), JIS B 0202]	3	A							
G 1" [(BSPP), EN ISO 228-1/PF (JIS-P), JIS B 0202]	3	B							
G 1½" [(BSPP), EN ISO 228-1/PF (JIS-P), JIS B 0202]	3	D							
Probe length									
(length from flange face) (threaded lengths include process thread)									
Note: No Y01 needed in Order code for standard lengths									
Extended rod, 350 mm (13.78 inch)			C						
Extended rod, 500 mm (19.69 inch)			D						
Extended rod, 750 mm (29.53 inch)			E						
Extended rod, 1 000 mm (39.37 inch)			F						
Extended rod, 1 250 mm (49.21 inch)			G						
Extended rod, 1 350 mm (53.15 inch)			H						
Extended rod, 1 500 mm (59.06 inch)			J						
Extended rod, 1 750 mm (68.90 inch)			K						
Extended rod, 2 000 mm (78.74 inch)			L						
Add Order code Y01 and plain text: "Insertion length ... mm"									
Extended rod, 350 ... 1 000 mm (13.82 ... 39.37 inch)			M						
Extended rod, 1 001 ... 2 000 mm (39.41 ... 78.74 inch)			N						
Extended rod, 2 001 ... 3 000 mm (78.78 ... 118.11 inch)			P						
Extended rod, 3 001 ... 4 000 mm (118.15 ... 157.48 inch)			Q						
Extended rod, 4 001 ... 5 000 mm (157.52 ... 196.85 inch)			R						
Extended rod, 5 001 ... 5 500 mm (196.89 ... 216.53 inch)			S						
Thermal isolator									
Without thermal isolator				0					
With thermal isolator [for process connection temperatures over 85 °C (185 °F)]				1					
Remote mount electronics and mounting bracket									
With 2 m (79 inch) of cable[2]				2					
With 5 m (197 inch) of cable[2]				3					
Wetted seals									
FKM and PTFE					0				
FFKM and PTFE [for process temperatures above -20 °C (-4 °F)]					1				
Probe material									
316L stainless steel with PPS probe body						0			
316L stainless steel with PVDF probe body						1			
Approvals									
Non-Sparking: CE, RCM, ATEX II 3 G Ex nA II T6 ... T4, ATEX II 2 D IP6X T100 °C								B	
Dust Ignition Proof: CE, RCM, ATEX II 1/2 D T100 °C								C	
Intrinsically Safe:[1] CE, RCM, ATEX II 1 G EEx ia IIC T6 ... T4, ATEX II 1/2 D IP6X T100 °C								D	

	Article No.								
Pointek CLS200 RF Capacitance point level switch, digital, sliding coupling design.	**7ML5643-**								
Detects level and interface in liquids, solids, slurries, and, foam. Adjustable, 5.5 m (18.04 ft), insertion, adaptable sensitivity, with the ability to tune out build-up on probe. With display and digital communications.	■	■	■	■	■	-	■	■	■ 0
Flameproof Enclosure with IS Probe: CE, RCM, ATEX II 1/2 G EEx d[ia] IIC T6 ... T4, ATEX II 1/2 D T100 °C								E	
Non-incendive: CSA/FM Class I, Div. 2, Groups A, B, C, D CSA/FM Class II, Div. 2, Groups F, G CSA/FM Class III T4 or T6								F	
Dust Ignition Proof with IS Probe: CSA/FM Class II, Div. 1, Groups E, F, G CSA/FM Class III T4								G	
Intrinsically Safe:[1] CSA/FM Class I, Div. 1, Groups A, B, C, D CSA/FM Class II, Div. 1, Groups E, F, G CSA/FM Class III T4								H	
Explosion Proof with IS Probe: CSA/FM Class I, Div. 1, Groups A, B, C, D CSA/FM Class II, Div. 1, Groups E, F, G CSA/FM Class III T4								J	
General Purpose (CSA, FM)								K	
General Purpose (CE, RCM)								L	
Enclosure and lid									
Aluminum epoxy coated									
2 x ½" NPT via adapter - cable inlet, IP65									A
2 x M20 x 1.5 cable inlet, IP65									B
2 x ½" NPT via adapter - cable inlet, IP68									C
2 x M20 x 1.5 cable inlet, IP68									D

[1] Barrier or Intrinsically Safe power supply required for Intrinsically Safe protection.

[2] Available with Approvals options F, G, H, J, and K.

Further designs	Order code
Please add "**-Z**" to Article No. and specify Order code(s).	
Total insertion length: enter the total insertion length in plain text description	**Y01**
Stainless steel tag [70 x 13 mm (2.75 x 0.5 inch)]: Measuring-point number/identification (max. 27 characters) specify in plain text	**Y15**
Manufacturer's test certificate: M to DIN 55350, Part 18 and ISO 9000	**C11**
Material inspection Certificate Type 3.1 per EN 10204	**C12**
INMETRO[1]	**E34**
Operating Instructions	
All literature is available to download for free, in a range of languages, at	

http://www.siemens.com/processinstrumentation/documentation

Accessories	See page 4/41

[1] Available only with Approvals options C and E.

© Siemens 2020

Selection and ordering data

	Article No.
Accessories	
SensGuard, ¾" NPT (PPS). Only available for CLS200 with ¾" NPT thread.	**7ML1830-1DL**
SensGuard, R 1" (BSPT) (PPS). Only available for CLS200 with ¾" NPT thread.	**7ML1830-1DM**
One metallic cable gland M20 x 1.5, -40 ... +80 °C (-40 ... +176 °F), Dust Ignition Proof, with integrated shield connection (available for PROFIBUS PA)	**7ML1930-1AQ**
General Purpose	
½" NPT General Purpose Cable Entry IP68/IP69K NEMA 6, -40 ... +80 °C (-40 ... +176 °F), Dust Ignition Proof, cable size 6 ... 12 mm (0.236 ... 0.472 inch)	**7ML1830-1JA**
M20 x 1.5 General Purpose Cable Entry IP68/IP69K NEMA 6, -40 ... +80 °C (-40 ... +176 °F), Dust Ignition Proof, cable size 7 ... 12 mm (0.275 ... 0.472 inch)	**7ML1830-1JC**
Hazardous Locations	
1/2" NPT EMC rated Cable Gland: Dust Ignition Proof, Flameproof Exd, and Increased Safety ATEX II 2 GD ExtD A21 (Zone 1, Zone 2, Zone 21, Zone 22, and in Gas Groups IIA, IIB and IIC) 60 ... +80 °C IP66, IP67, IP68, NEMA4X, cable sizes 5.5 ... 12 mm (0.216 ... 0.472 inch)	**7ML1830-1JB**
M20 EMC rated Cable Gland: Dust Ignition Proof, Flameproof Exd, and Increased Safety ATEX II 2 GD ExtD A21 (Zone 1, Zone 2, Zone 21, Zone 22 and in Gas Groups IIA, IIB and IIC) 60 ... +80 °C IP66, IP67, IP68, NEMA4X, cable sizes 5.5 ... 12 mm (0.216 ... 0.472 inch)	**7ML1830-1JD**
Blind threaded flanges are available. Customers interested in a custom designed device should consult a local sales person. For more information, please visit http://www.automation.siemens.com/aspa_app.	
Pointek Specials	See page **4/70**

Options

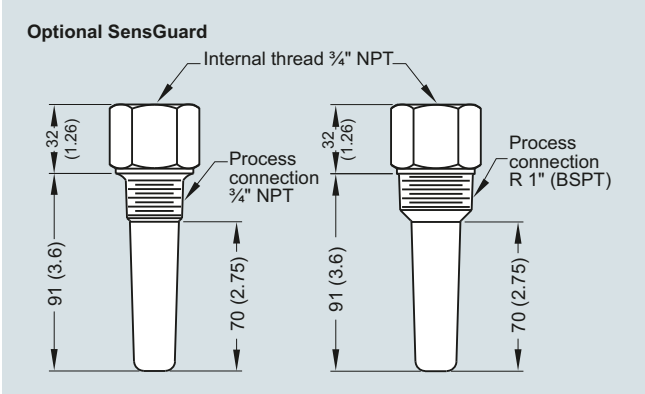

Optional SensGuard, dimensions in mm (inch)

4

© Siemens 2020

Characteristic curves

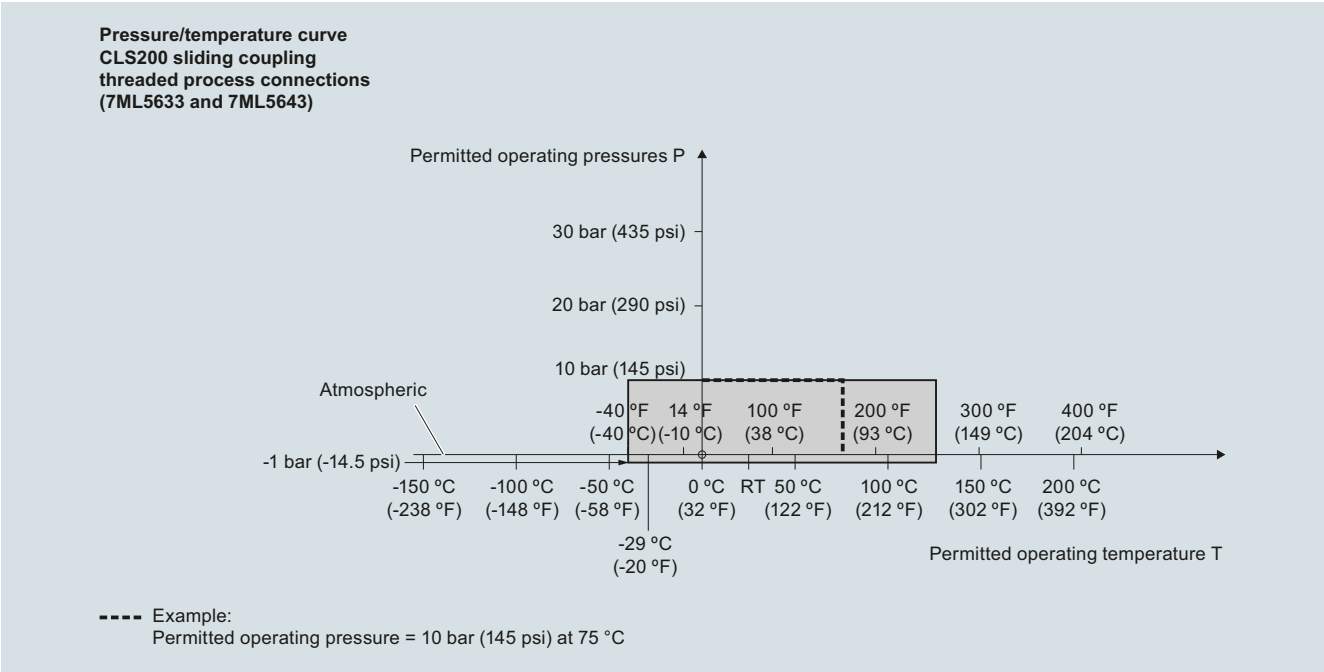

Pointek CLS200 process pressure/temperature derating curves (7ML5633 and 7ML5643)

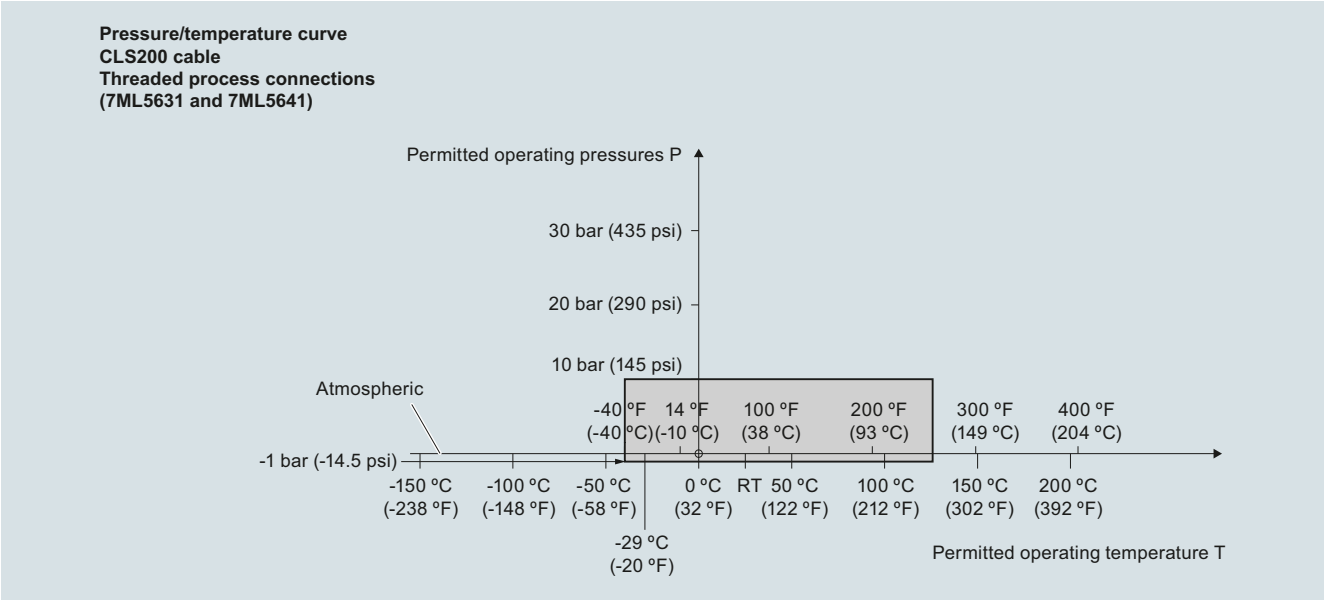

Pointek CLS200 process pressure/temperature derating curves (7ML5631 and 7ML5641)

© Siemens 2020

Characteristic curves (continued)

Pressure/temperature curve
CLS200 compact and extended rod
Threaded process connections
(7ML5630 and 7ML5640)

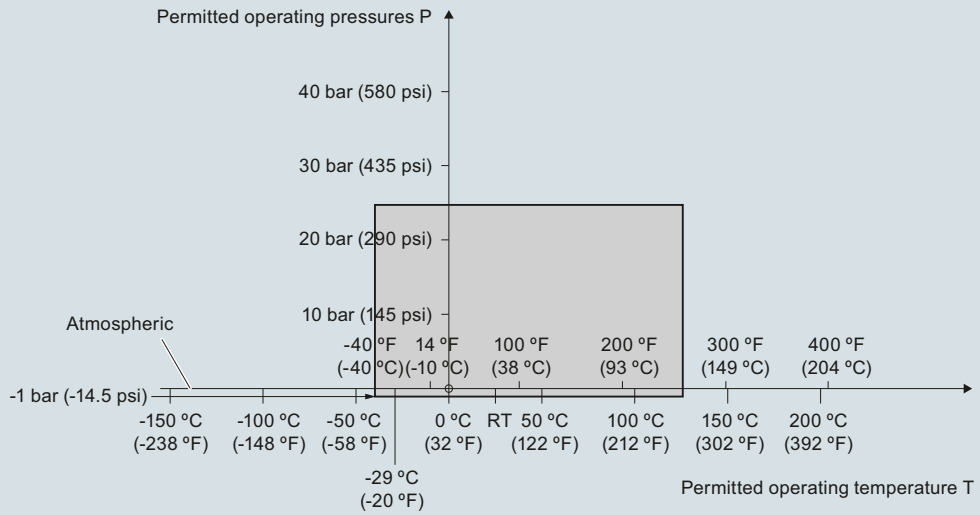

Pointek CLS200 process pressure/temperature derating curves (7ML5630 or 7ML5640)

Pressure/temperature curve
CLS200 compact and extended sanitary type
Sanitary process connections
(7ML5632 and 7ML5642)

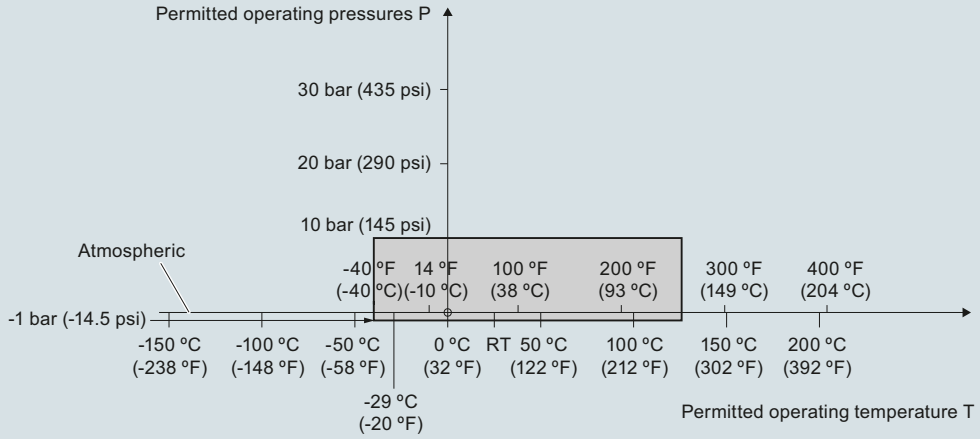

Pointek CLS200 process pressure/temperature derating curves (7ML5632 and 7ML5642)

© Siemens 2020

Characteristic curves (continued)

Pressure/temperature curve
CLS200, cable
ASME flanged process connections
(7ML5631 and 7ML5641)

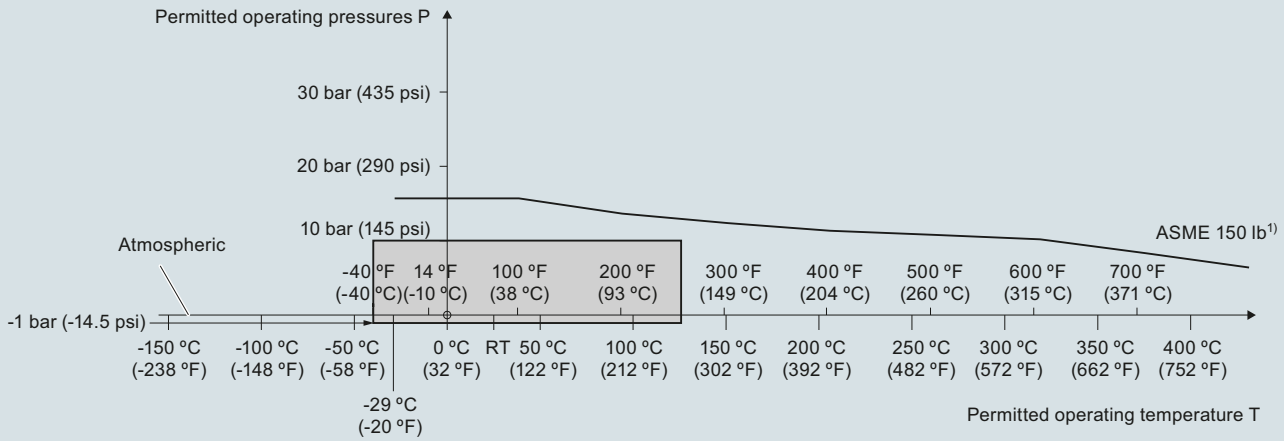

1) The curve denotes the minimum allowable flange class for the shaded area below.

Pointek CLS200 process pressure/temperature derating curves (7ML5631 and 7ML5641)

Pressure/temperature curve
CLS200 compact and extended rod
ASME flanged process connections
(7ML5630 and 7ML5640)

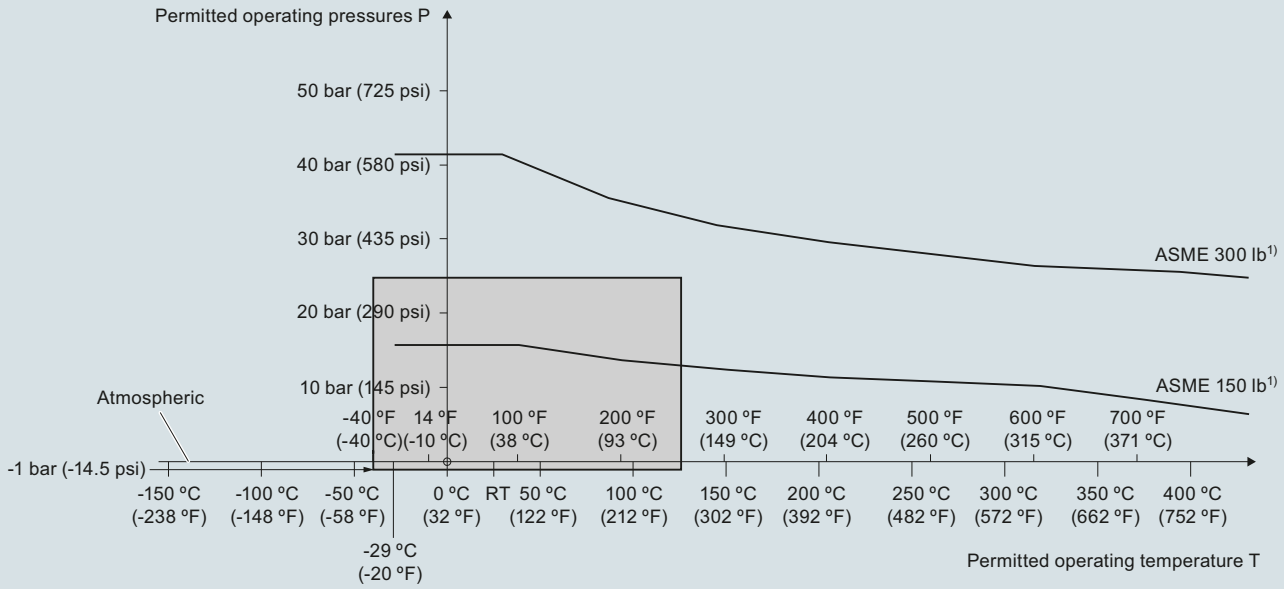

1) The curve denotes the minimum allowable flange class for the shaded area below.

Pointek CLS200 process pressure/temperature derating curves (7ML5630 and 7ML5640)

© Siemens 2020

Characteristic curves (continued)

Pressure/temperature curve
CLS200 cable
EN flanged process connections
(7ML5631 and 7ML5641)

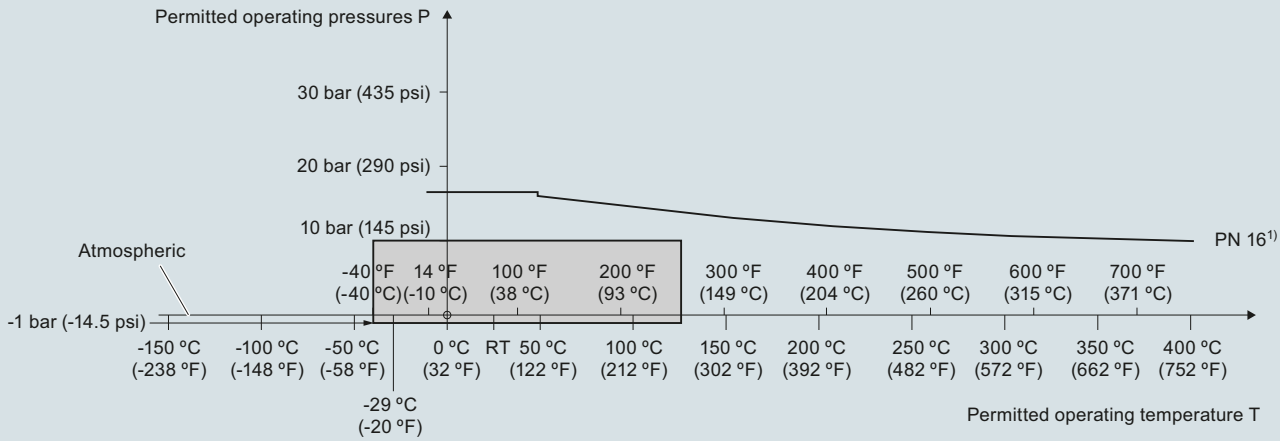

[1)] The curve denotes the minimum allowable flange class for the shaded area below.

Pointek CLS200 process pressure/temperature derating curves (7ML5631 and 7ML5641)

Pressure/Temperature Curve
CLS200 Compact and Extended Rod
EN Flanged Process Connections
(7ML5630 and 7ML5640)

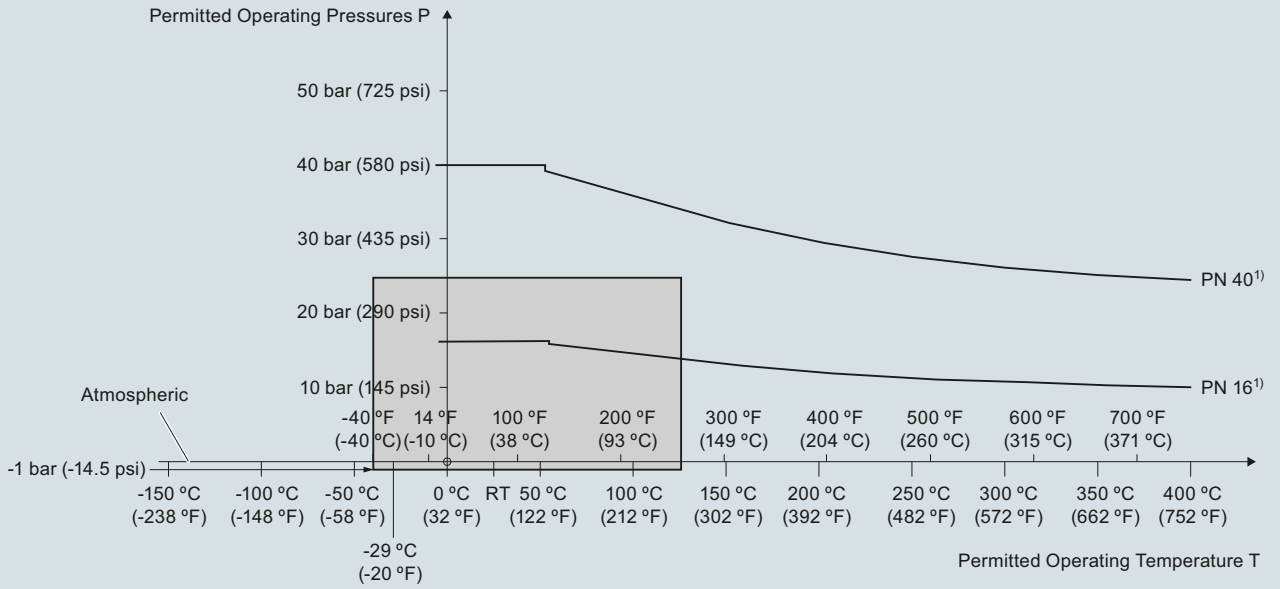

[1)] The curve denotes the minimum allowable flange class for the shaded area below.

Pointek CLS200 process pressure/temperature derating curves (7ML5630 and 7ML5640)

© Siemens 2020

Dimensional drawings

Compact version
Threaded
(7ML5630 and 7ML5640)

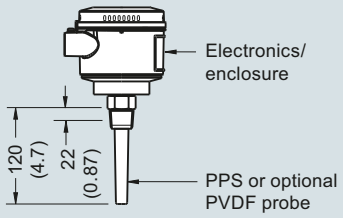

Extended rod version
Threaded
(7ML5630 and 7ML5640)

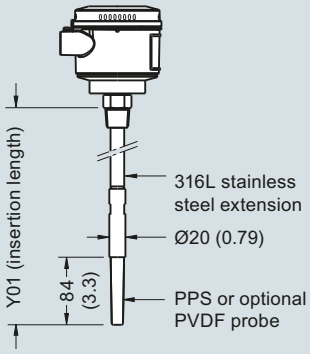

Min. insertion length = 200 (7.87)
Max. insertion length = 5 500 (216)

Extended cable version
Threaded
(7ML5631 and 7ML5641)

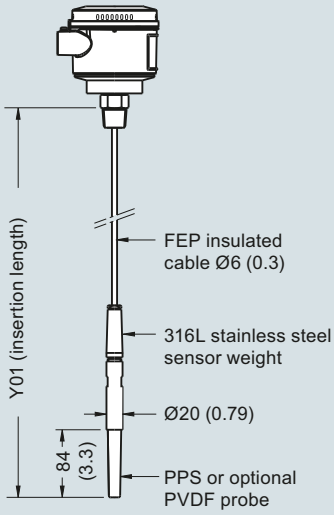

Min. insertion length = 500 (19.69)
Max. insertion length = 30 000 (1 181)
Applicable for liquids and solids applications. Cable can be shortened on site.

Sanitary compact version
Sanitary fitting
(7ML5632 and 7ML5642)

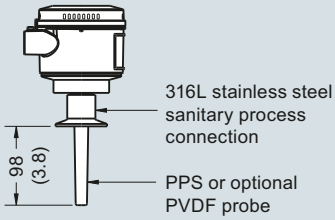

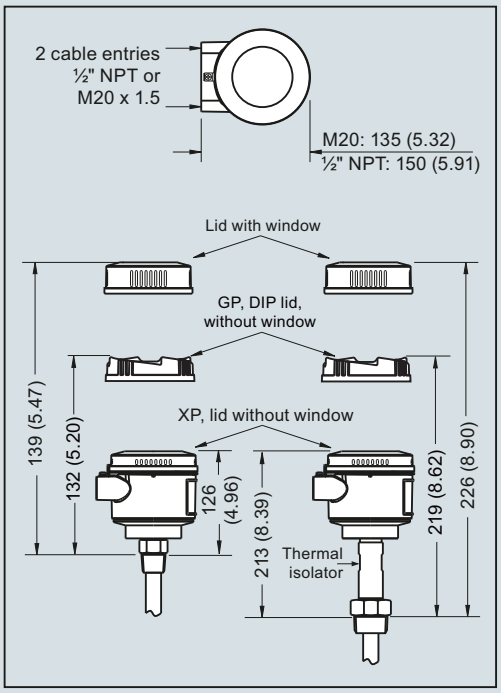

Sanitary extended version
Sanitary fitting
(7ML5632 and 7ML5642)

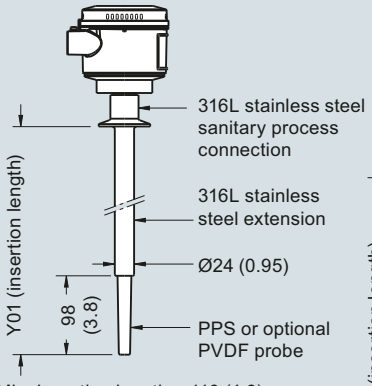

Min. insertion length = 110 (4.3)
Max. insertion length = 5 500 (216)

Sliding coupling version
Threaded
(7ML5633 and 7ML5643)

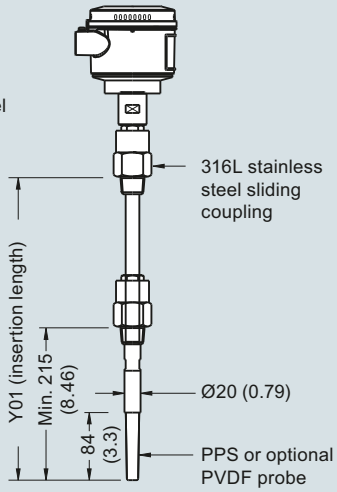

Min. insertion length = 350 (13.82)
Max. insertion length = 5 500 (216)

Pointek CLS200 threaded/sanitary process connections, dimensions in mm (inch)

© Siemens 2020

Dimensional drawings (continued)

Compact version
Welded Flange (7ML5630 and 7ML5640)
Welded Flange, PFA coated
(7ML5634 and 7ML5644)

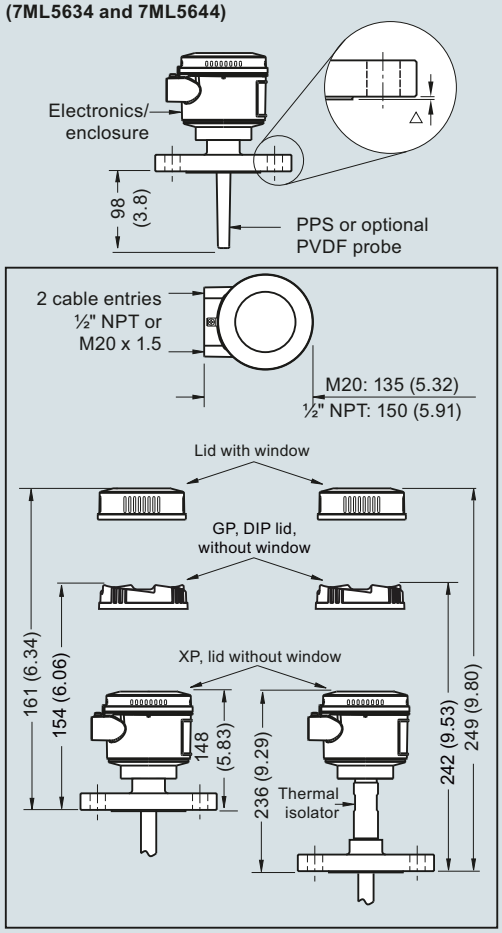

Extended rod version
Welded Flange (7ML5630 and 7ML5640)
Welded Flange, PFA coated
(7ML5634 and 7ML5644)

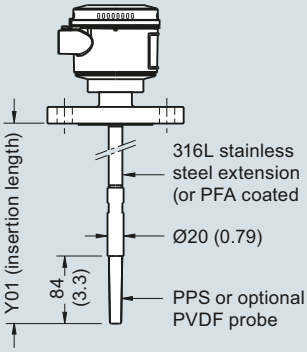

Min. insertion length = 200 (7.87)
Max. insertion length = 5 500 (216)

Extended cable version
Welded Flange
(7ML5631 and 7ML5641)

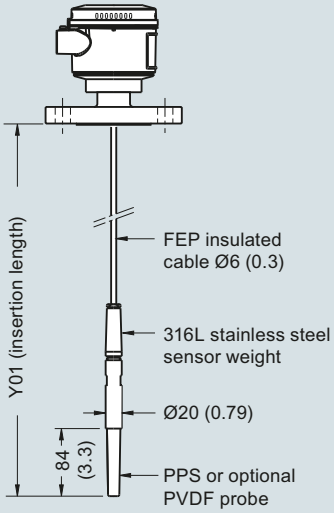

Min. insertion length = 500 (19.69)
Max. insertion length = 30 000 (1 181)
Applicable for liquids and solids applications. Cable can be shortened on site.

Flange Facing (raised face)	
Flange Class	**Facing thickness**
△ ASME 150/300	2 (0.08)
△ ASME 600/900	7 (0.28)
△ PN16/40	2 (0.08)

Insertion length does not include any raised face/gasket face dimension (see Flange Facing Table above)

Pointek CLS200 flanged process connections, dimensions in mm (inch)

© Siemens 2020

Circuit diagrams

Wiring: Pointek CLS200 standard

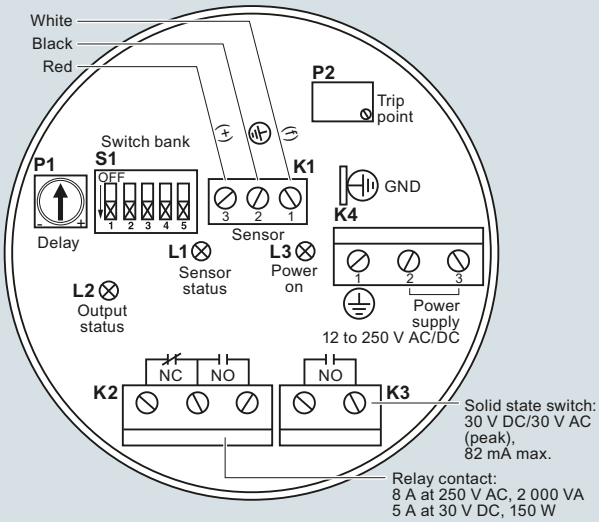

Notes:
- Identification label is on underside of lid. Switch and potentiometer settings are for illustration purposes only (refer to operation/setup in manual).
- All field wiring must have insulation suitable for at least 250 V.
- Relay contact terminals are for use with equipment having no accessible live parts and wiring having insulation suitable for at least 250 V.
- Maximum working voltage between adjacent relay contacts shall be 250 V.
- Refer to the Instruction Manual or contact Siemens representative for detailed wiring information.

Wiring: Pointek CLS200 Digital

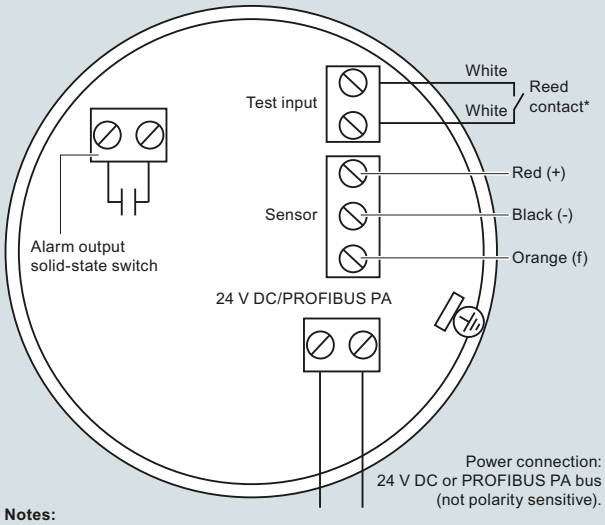

Notes:
Refer to the instruction manual or contact a Siemens representative for detailed wiring information.

***Magnet activated sensor Test**
A magnet can be used to test the sensor without opening the lid of the Pointek CLS200 Digital version. Bring the magnet close to the test area indicated on the enclosure. The sensor test starts and finishes automatically after 10 seconds.

Pointek CLS200 connections

© Siemens 2020

Overview

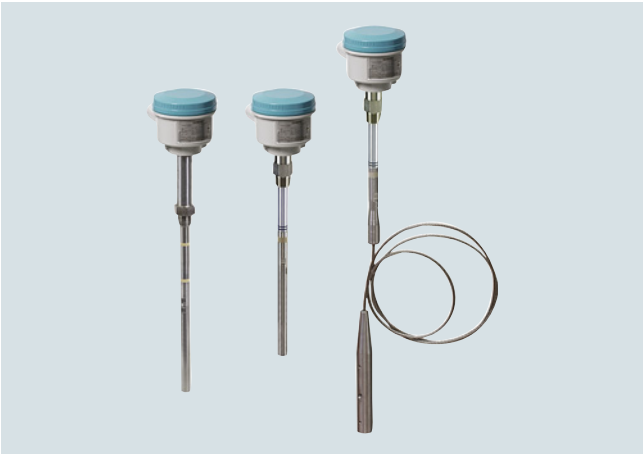

Pointek CLS300 (standard version) is an inverse frequency shift capacitance level and material detection switch with optional rod/cable choices and configurable output. CLS300 is ideal for detecting liquids, solids, slurries, foam, and interfaces in demanding conditions where high pressure and temperatures are present and has the ability to tune out buildup on the probe.

Benefits

- Active-Shield technology so measurement is unaffected by material buildup or nozzle interference in active shield section
- Performs in extremely abrasive conditions because of solid rod construction
- Three LED indicators for adjustment control, output status, and power
- High-temperature version up to 400 °C (752 °F)

Application

Pointek CLS300 standard version has three LED indicators with basic relay and solid-state switch alarms.

The robust design of CLS300 makes it specifically applicable for heavy solids applications where abrasive materials occur as in the mining industry. The fully potted electronics are unaffected by condensation, dust or vibration.

Wetted parts are made of stainless steel with a PFA shield for high chemical resistance, and of ceramic and stainless steel for high temperature version. Materials with low or high dielectric constants can be accurately detected. The unique Active Shield suppresses interference from material buildup or long installation nozzles.

The unique modular design of the Pointek CLS300 provides a wide range of configurations, process connections, extensions and approvals to meet the temperature and pressure requirements of specific applications. The modular design makes ordering easier and reduces stocking requirements. A wide range of probe configurations are available, including rod and cable versions.

- Key Applications: liquids, slurries, bulk solids, relatively high pressure and temperature, hazardous areas, milling and mining applications

Configuration

Installation

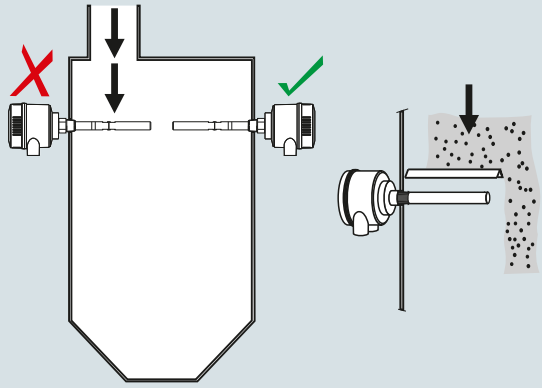

Keep unit out of path of falling material, or protect probe from falling material.

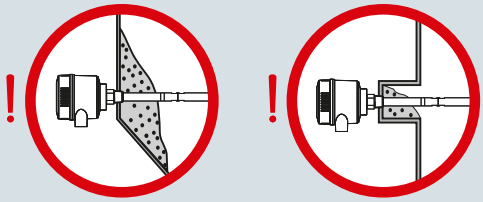

Build up of material in active shield area does not affect switch operation.

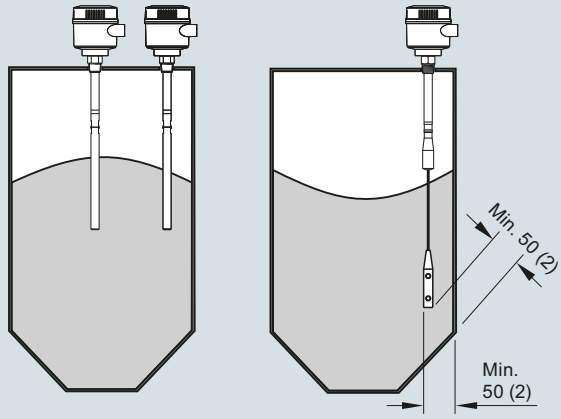

Install probe at least 50 (2) from tank wall.
Note angle of repose and adjust accordingly.

Pointek CLS300 installation, dimensions in mm (inch)

© Siemens 2020

Technical specifications

Mode of operation	
Measuring principle	Inverse frequency shift capacitive level detection
Input	
Measured variable	Change in picoFarad (pF)
Output	
Output signal	
• Relay output	1 SPDT Form C relay
- Max. contact voltage	• 30 V DC • 250 V AC
- Max. contact current	• 5 A (DC) • 8 A (AC)
- Max. switching capacity	• 150 W (DC) • 2 000 VA (AC)
- Time delay (ON and/or OFF)	1 ... 60 s
• Solid-state output	
- Output	Galvanically isolated
- Protection	Against reversed polarity (bipolar)
- Max. switching voltage	• 30 V (DC) • 30 V peak (AC)
- Max. load current	82 mA
- Voltage drop	< 1 V, typical at 50 mA
- Time delay (pre or post switching)	1 ... 60 s
Accuracy	
Resolution	
• Min. sensitivity (pF)	1 % change in actual capacitance
• Max. temperature error	0.2 % of actual capacitance value
Rated operating conditions[1]	
Installation conditions	
• Location	Indoor/outdoor
Ambient conditions	
• Ambient temperature	-40 ... +85 °C (-40 ... +185 °F)[2]
• Storage temperature	-40 ... +85 °C (-40 ... +185 °F)
Medium conditions	Liquids, bulk solids, slurries and interfaces, and applications with viscous materials
• Relative dielectric constant ε_r	Min. 1.5
• Process temperature	
- Rod/Cable version	-40 ... +200 °C (-40 ... +392 °F)[2]
- High-temperature version	-40 ... +400 °C (-40 ... +752 °F)
• Process pressure[3]	-1 ... +35 bar g (-14.6 ... +511 psi g)

Design	
Material (enclosure)	Powder-coated aluminum with gasket
Degree of Protection	Standard: Type 4/NEMA 4/IP65 Optional: Type 4/NEMA 4/IP68
Cable inlet	2 x M20 x 1.5 thread (option: 2 x ½" NPT conduit entry including 1 plugged entry)
Controls and displays	
Displays	3 LEDs, for probe status, output status and power supply
Potentiometers	2 potentiometers for time delay and sensitivity
Switches	5 DIP switches for delay on/off, fail-safe high/low, time delay test/adjust, high/low sensitivity, test delay settings
Power supply	
Supply	12 ... 250 V AC/DC, 0 ... 60 Hz, galvanically isolated, 2 W
Certificates and approvals	
General Purpose	CSA, FM, CE, RCM
Flameproof Enclosure with IS Probe	ATEX II ½ G EEx d[ia] IIC T6 ... T1 ATEX II ½ D T100 °C
Dust Ignition Proof with IS Probe	ATEX II ½ D T100 °C CSA/FM Class II, Div. 1, Groups E, F, G CSA/FM Class III T4
Explosion Proof Enclosure with IS Probe	CSA/FM Class I, Div. 1, Groups A, B, C, D CSA/FM Class II, Div. 1, Groups E, F, G CSA/FM Class III T4
Marine	Lloyds Register of Shipping, Categories ENV1, ENV2, and ENV5
Overfill Protection	WHG (Germany) VLAREM II (Belgium)
Others	Pattern Approval (China)

1) When operation is in areas classified as hazardous, observe restrictions according to relevant certificate. See also Pressure/Temperature curves starting on page 5/57.

2) Thermal isolator is used if process connection temperature exceeds 85 °C (185 °F).

3) Pressure rating of process seal is temperature dependent. See Pressure/Temperature curves starting on page 5/57.

Design: Probe

	Rod version	High Temperature version	Cable version
Length	Min. 250 mm (9.8 inch), max. 1 000 mm (40 inch)	Min. 250 mm (9.8 inch), max. 1 000 mm (40 inch)	Min. 1 000 mm (40 inch), max. 25 000 mm (984 inch)
Sensor wetted parts	PFA (no insulation on active probe), 316L stainless steel, PEEK isolators	Ceramic (ZrO_2[1]) isolators (no insulation on active probe), 316L stainless steel	316 stainless steel, o ptional PFA, PEEK isolators
O-ring seal material	FKM (optional FFKM)[2]	Graphite[2]	FKM (optional FFKM)[2]
Thermal isolator	Optional	Standard	Optional
Extension	User selectable length	User selectable length	User selectable cable length

1) Zirconium Oxide

2) For caustic materials, consult a local sales person for alternative O-rings.
For more information, please visit http://www.automation.siemens.com/aspa_app.

© Siemens 2020

Selection and ordering data

	Article No.
Pointek CLS300 RF Capacitance point level switch, rod design. ↗	**7ML5650-** ■ ■ ■ ■ ■ - ■ ■ ■ ■
Detects level and interface in aggressive liquids, solids, slurries, and foam. Adjustable, 1 m (3.28 ft), insertion, adaptable sensitivity, with active shield to tune out build-up on probe.	
↗ Click on the Article No. for the online configuration in the PIA Life Cycle Portal.	
Process connection	
Threaded, 316L stainless steel	
¾" NPT [(Taper), ANSI/ASME B1.20.1]	0 A
1" NPT [(Taper), ANSI/ASME B1.20.1]	0 B
1¼" NPT [(Taper), ANSI/ASME B1.20.1]	0 C
1½" NPT [(Taper), ANSI/ASME B1.20.1]	0 D
R ¾" [(BSPT), EN 10226/PT (JIS-T), JIS B 0203]	1 A
R 1" [(BSPT), EN 10226/PT (JIS-T), JIS B 0203]	1 B
R 1½" [(BSPT), EN 10226/PT (JIS-T), JIS B 0203]	1 D
G ¾" [(BSPP), EN ISO 228-1/PF (JIS-P), JIS B 0202]	3 A
G 1" [(BSPP), EN ISO 228-1/PF (JIS-P), JIS B 0202]	3 B
G 1½" [(BSPP), EN ISO 228-1/PF (JIS-P), JIS B 0202]	3 D
Welded flange, 316L stainless steel, raised face	
1" ASME, 150 lb	5 A
1" ASME, 300 lb	5 B
1" ASME, 600 lb	5 C
1½" ASME, 150 lb	5 D
1½" ASME, 300 lb	5 E
1½" ASME, 600 lb	5 F
2" ASME, 150 lb	5 G
2" ASME, 300 lb	5 H
2" ASME, 600 lb	5 J
3" ASME, 150 lb	5 K
3" ASME, 300 lb	5 L
3" ASME, 600 lb	5 M
4" ASME, 150 lb	5 N
4" ASME, 300 lb	5 P
4" ASME, 600 lb	5 Q
Welded flange, 316L stainless steel, Type A flat faced	
DN 25, PN 16	6 A
DN 25, PN 40	6 B
DN 40, PN 16	6 C
DN 40, PN 40	6 D
DN 50, PN 16	6 E
DN 50, PN 40	6 F
DN 80, PN 16	6 G
DN 80, PN 40	6 H
DN 100, PN 16	6 J
DN 100, PN 40	6 K
(Note: flange bolting patterns and facings dimensionally correspond to the applicable ASME B16.5 or EN 1092-1 standard.)	
Probe length	
(length from flange face) (threaded lengths include process thread)	
Note: No Y01 needed in Order code for standard lengths	
Standard version, rod 350 mm (13.78 inch)	A
Extended rod, length 500 mm (19.69 inch)	B
Extended rod, length 750 mm (29.53 inch)	C
Extended rod, length 1 000 mm (39.37 inch)	D
Add Order code Y01 and plain text: "Insertion length ... mm"	
Extended rod, factory adjusted length 250 ... 499 mm (9.8 ... 19.65 inch)	E
Extended rod, factory adjusted length 500 ... 749 mm (19.69 ... 29.49 inch)	F
Extended rod, factory adjusted length 750 ... 999 mm (29.53 ... 39.3 inch)	G

	Article No.
Pointek CLS300 RF Capacitance point level switch, rod design.	**7ML5650-** ■ ■ ■ ■ ■ - ■ ■ ■ ■
Detects level and interface in aggressive liquids, solids, slurries, and foam. Adjustable, 1 m (3.28 ft), insertion, adaptable sensitivity, with active shield to tune out build-up on probe.	
Thermal isolator	
Without thermal isolator	0
With thermal isolator [for process connection temperatures over 85 °C (185 °F)]	1
Wetted seals	
FKM	0
FFKM [for process temperatures above -20 °C (-4 °F)]	1
Probe material	
316L stainless steel with PFA lining and PEEK isolators	0
Approvals	
Dust Ignition Proof with IS Probe: CE, RCM, ATEX II ½ D T100 °C	C
Flameproof Enclosure with IS Probe: CE, RCM, ATEX II ½ G EEx d[ia] IIC T6 ... T1, ATEX II ½ D T100 °C	D
Flameproof Enclosure with IS Probe, with WHG approval: CE, RCM, ATEX II ½ G EEx d[ia] IIC T6 ... T1, ATEX II ½ D T100 °C	E
Dust Ignition Proof with IS Probe: CSA/FM Class II, Div. 1, Groups E, F, G, CSA/FM Class III T4	F
Explosion Proof Enclosure with IS Probe: CSA/FM Class I, Div. 1, Groups A, B, C, D, CSA/FM Class II, Div. 1, Groups E, F, G, CSA/FM Class III T4	G
General Purpose (CSA, FM)	H
General Purpose (CE, RCM)	J
General Purpose with WHG approval (CSA, FM, CE, RCM)	K
Enclosure and lid	
Aluminum epoxy coated	
2 x ½" NPT via adapter - cable inlet, IP65	A
2 x M20 x 1.5 cable inlet, IP65	B
2 x ½" NPT via adapter - cable inlet, IP68	C
2 x M20 x 1.5 cable inlet, IP68	D
Active shield length	
Standard length - (125 mm threaded, 105 mm flanged)	0
Extended shield - (250 mm threaded, 230 mm flanged)[1]	1
Extended shield - (400 mm threaded, 380 mm flanged)[2]	2

[1] Available with Probe version options B ... D, F, G only [≥ 500 mm (19.69 inch)].

[2] Available with Probe version options C, D, and G only [≥ 750 mm (29.53 inch)].

4

© Siemens 2020

Selection and ordering data

	Order code
Further designs	
Please add "**-Z**" to Article No. and specify Order code(s).	
Total insertion length: enter the total insertion length in plain text description	**Y01**
Stainless steel tag [70 x 13 mm (2.75 x 0.5 inch)]: Measuring-point number/identification (max. 27 characters) specify in plain text	**Y15**
Manufacturer's test certificate: M to DIN 55350, Part 18 and to ISO 9000	**C11**
Material Inspection Certificate Type 3.1 per EN 10204	**C12**
INMETRO[1)]	**E34**
Operating Instructions	
All literature is available to download for free, in a range of languages, at	
http://www.siemens.com/processinstrumentation/documentation.	
Accessories	See page **4/69**

[1)] Available only with Approvals options C, D, E.

	Article No.								
Pointek CLS300 RF Capacitance point level switch, cable design. ↗	**7ML5651-**								
Detects level and interface in aggressive liquids, solids, slurries, and foam. Cable extension options to 25 m (82.02 ft), adaptable sensitivity, with active shield to tune out build-up on probe.	■	■	■	■	■	-	■	■	■
↗ Click on the Article No. for the online configuration in the PIA Life Cycle Portal.									
Process connection									
Threaded, 316L stainless steel									
1¼" NPT [(Taper), ANSI/ASME B1.20.1]	**0**	**C**							
1½" NPT [(Taper), ANSI/ASME B1.20.1]	**0**	**D**							
R 1½" [(BSPT), EN 10226/PT (JIS-T), JIS B 0203]	**1**	**D**							
G 1½" [(BSPP), EN ISO 228-1/PF (JIS-P), JIS B 0202]	**3**	**D**							
Welded flange, 316L stainless steel, raised face									
1½" ASME, 150 lb	**5**	**D**							
1½" ASME, 300 lb	**5**	**E**							
1½" ASME, 600 lb	**5**	**F**							
2" ASME, 150 lb	**5**	**G**							
2" ASME, 300 lb	**5**	**H**							
2" ASME, 600 lb	**5**	**J**							
3" ASME, 150 lb	**5**	**K**							
3" ASME, 300 lb	**5**	**L**							
3" ASME, 600 lb	**5**	**M**							
4" ASME, 150 lb	**5**	**N**							
4" ASME, 300 lb	**5**	**P**							
4" ASME, 600 lb	**5**	**Q**							
Welded flange, 316L stainless steel, Type A flat faced									
DN 40, PN 16	**6**	**C**							
DN 40, PN 40	**6**	**D**							
DN 50, PN 16	**6**	**E**							
DN 50, PN 40	**6**	**F**							
DN 80, PN 16	**6**	**G**							
DN 80, PN 40	**6**	**H**							
DN 100, PN 16	**6**	**J**							
DN 100, PN 40 (Note: Flange bolting patterns and facings dimensionally correspond to the applicable ASME B16.5 or EN 1092-1 standard.)	**6**	**K**							
Probe length									
(length from flange face) (threaded lengths include process thread)									
Note: No Y01 needed in Order code for standard lengths									
Extended cable, 3 000 mm (118.11 inch), length can be shortened by customer			**A**						
Extended cable, 6 000 mm (236.22 inch), length can be shortened by customer			**B**						
Add Order code Y01 and plain text: "Insertion length ... mm"									
Extended cable, 500 ... 1 000 mm (19.69 ... 39.37 inch)			**E**						
Extended cable, 1 001 ... 5 000 mm (39.41 ... 196.85 inch)			**F**						
Extended cable, 5 001 ... 10 000 mm (196.89 ... 393.70 inch)			**G**						
Extended cable, 10 001 ... 15 000 mm (393.74 ... 590.55 inch)			**H**						
Extended cable, 15 001 ... 20 000 mm (590.59 ... 787.40 inch)			**J**						
Extended cable, 20 001 ... 25 000 mm (787.44 ... 984.25 inch)			**K**						

© Siemens 2020

Selection and ordering data

	Article No.
Pointek CLS300 RF Capacitance point level switch, cable design.	**7ML5651-** ■ ■ ■ ■ ■ - ■ ■ ■ ■
Detects level and interface in aggressive liquids, solids, slurries, and foam. Cable extension options to 25 m (82.02 ft), adaptable sensitivity, with active shield to tune out build-up on probe.	
Thermal isolator	
Without thermal isolator	**0**
With thermal isolator [for process connection temperatures over 85 °C (185 °F)]	**1**
Wetted seals	
FKM	**0**
FFKM [for process temperatures above -20 °C (-4 °F)]	**1**
Probe material	
Bare 316L stainless steel cable, PEEK isolators and 316L stainless steel cable weight	**0**
PFA coated cable, PEEK isolators and 316L stainless steel cable weight	**1**
Approvals	
Dust Ignition Proof with IS Probe: CE, RCM, ATEX II ½ D T100 °C	**C**
Flameproof Enclosure with IS Probe: CE, RCM, ATEX II ½ G EEx d[ia] IIC T6 ... T1, ATEX II ½ D T100 °C	**D**
Flameproof Enclosure with IS Probe, with WHG approval: CE, RCM, ATEX II ½ G EEx d[ia] IIC T6 ... T1, ATEX II ½ D T100 °C	**E**
Dust Ignition Proof with IS Probe:CSA/FM Class II, Div. 1, Groups E, F, G, CSA/FM Class III T4	**F**
Explosion Proof Enclosure with IS Probe: CSA/FM Class I, Div. 1, Groups A, B, C, D, CSA/FM Class II, Div. 1, Groups E, F, G, CSA/FM Class III T4	**G**
General Purpose (CSA, FM)	**H**
General Purpose (CE, RCM)	**J**
General Purpose with WHG approval (CSA, FM, CE, RCM)	**K**
Enclosure and lid	
Aluminum epoxy coated	
2 x ½" NPT via adapter - cable inlet, IP65	**A**
2 x M20 x 1.5 cable inlet, IP65	**B**
2 x ½" NPT via adapter - cable inlet, IP68	**C**
2 x M20 x 1.5 cable inlet, IP68	**D**
Active shield length	
Standard length - (125 mm threaded, 105 mm flanged)	**0**
Extended shield - (250 mm threaded, 230 mm flanged)	**1**
Extended shield - (400 mm threaded, 380 mm flanged)[1]	**2**

[1] Available with Probe version options A, B, F ... K, only [≥ 1 000 mm (39.7 inch)].

	Order code
Further designs	
Please add "**-Z**" to Article No. and specify Order code(s).	
Total insertion length: enter the total insertion length in plain text description	**Y01**
Stainless steel tag [70 x 13 mm (2.75 x 0.5 inch)]: Measuring-point number/identification (max. 27 characters) specify in plain text	**Y15**
Manufacturer's test certificate: M to DIN 55350, Part 18 and to ISO 9000	**C11**
Material Inspection Certificate Type 3.1 per EN 10204	**C12**
INMETRO[1]	**E34**
Operating Instructions	
All literature is available to download for free, in a range of languages, at	
http://www.siemens.com/processinstrumentation/documentation.	
Accessories	See page **4/69**

[1] Available only with Approvals options C, D, E.

© Siemens 2020

Selection and ordering data

	Article No.
Pointek CLS300 RF Capacitance point level switch, high temperature design. ↗	**7ML5652-** ■ ■ ■ **0** ■ **-** ■ ■ ■ ■
Detects level and interface in aggressive liquids, solids, slurries, and foam. Adjustable, 1 m (3.28 ft), insertion, adaptable sensitivity, with active shield to tune out build-up on probe.	
↗ Click on the Article No. for the online configuration in the PIA Life Cycle Portal.	
Process connection	
Threaded, 316L stainless steel	
¾" NPT [(Taper), ANSI/ASME B1.20.1]	**0 A**
1" NPT [(Taper), ANSI/ASME B1.20.1]	**0 B**
1¼" NPT [(Taper), ANSI/ASME B1.20.1]	**0 C**
1½" NPT [(Taper), ANSI/ASME B1.20.1]	**0 D**
R ¾" [(BSPT), EN 10226/PT (JIS-T), JIS B 0203]	**1 A**
R 1" [(BSPT), EN 10226/PT (JIS-T), JIS B 0203]	**1 B**
R 1½" [(BSPT), EN 10226/PT (JIS-T), JIS B 0203]	**1 D**
G ¾" [(BSPP), EN ISO 228-1/PF (JIS-P), JIS B 0202]	**3 A**
G 1" [(BSPP), EN ISO 228-1/PF (JIS-P), JIS B 0202]	**3 B**
G 1½" [(BSPP), EN ISO 228-1/PF (JIS-P), JIS B 0202]	**3 D**
Welded flange, 316L stainless steel, raised face	
1" ASME, 150 lb	**5 A**
1" ASME, 300 lb	**5 B**
1" ASME, 600 lb	**5 C**
1½" ASME, 150 lb	**5 D**
1½" ASME, 300 lb	**5 E**
1½" ASME, 600 lb	**5 F**
2" ASME, 150 lb	**5 G**
2" ASME, 300 lb	**5 H**
2" ASME, 600 lb	**5 J**
3" ASME, 150 lb	**5 K**
3" ASME, 300 lb	**5 L**
3" ASME, 600 lb	**5 M**
4" ASME, 150 lb	**5 N**
4" ASME, 300 lb	**5 P**
4" ASME, 600 lb	**5 Q**
Welded flange, 316L stainless steel, Type A flat faced	
DN 25, PN 16	**6 A**
DN 25, PN 40	**6 B**
DN 40, PN 16	**6 C**
DN 40, PN 40	**6 D**
DN 50, PN 16	**6 E**
DN 50, PN 40	**6 F**
DN 80, PN 16	**6 G**
DN 80, PN 40	**6 H**
DN 100, PN 16	**6 J**
DN 100, PN 40	**6 K**
(Note: Flange bolting patterns and facings dimensionally correspond to the applicable ASME B16.5 or EN 1092-1 standard.)	
Probe length	
(length from flange face) (threaded lengths include process thread)	
Note: No Y01 needed in Order code for standard lengths	
Standard version rod, 350 mm (13.78 inch)	**A**
Extended rod, length 500 mm (19.69 inch)	**B**
Extended rod, length 750 mm (29.53 inch)	**C**
Extended rod, length 1 000 mm (39.37 inch)	**D**

	Article No.
Pointek CLS300 RF Capacitance point level switch, high temperature design.	**7ML5652-** ■ ■ ■ **0** ■ **-** ■ ■ ■ ■
Detects level and interface in aggressive liquids, solids, slurries, and foam. Adjustable, 1 m (3.28 ft), insertion, adaptable sensitivity, with active shield to tune out build-up on probe.	
Add Order code Y01 and plain text: "Insertion length ... mm"	
Extended rod, factory adjusted length 250 ... 499 mm (9.8 ... 19.65 inch)	**E**
Extended rod, factory adjusted length 500 ... 749 mm (19.69 ... 29.49 inch)	**F**
Extended rod, factory adjusted length 750 ... 999 mm (29.53 ... 39.3 inch)	**G**
Wetted seals	
Graphite	**0**
Probe material	
316L stainless steel with ceramic (ZrO_2) isolators	**0**
Approvals	
Dust Ignition Proof with IS Probe: CE, RCM, ATEX II ½ D T100 °C	**C**
Flameproof Enclosure with IS Probe: CE, RCM, ATEX II ½ G EEx d[ia] IIC T6 ... T1, ATEX II ½ D T100 °C	**D**
Flameproof Enclosure with IS Probe with WHG approval: CE, RCM, ATEX II ½ G EEx d[ia] IIC T6 ... T1, ATEX II ½ D T100 °C	**E**
Dust Ignition Proof with IS Probe: CSA/FM Class II, Div. 1, Groups E, F, G, CSA/FM Class III T4	**F**
Explosion Proof Enclosure with IS Probe: CSA/FM Class I, Div. 1, Groups A, B, C, D, CSA/FM Class II, Div. 1, Groups E, F, G, CSA/FM Class III T4	**G**
General Purpose (CSA, FM)	**H**
General Purpose (CE, RCM)	**J**
General Purpose with WHG approval (CSA, FM, CE, RCM)	**K**
Enclosure and lid	
Aluminum epoxy coated	
2 x ½" NPT via adapter - cable inlet, IP65	**A**
2 x M20 x 1.5 cable inlet, IP65	**B**
2 x ½" NPT via adapter - cable inlet, IP68	**C**
2 x M20 x 1.5 cable inlet, IP68	**D**
Active shield length	
Standard length - (125 mm threaded, 105 mm flanged)	**0**
Extended shield - (250 mm threaded, 230 mm flanged)[1]	**1**
Extended shield - (400 mm threaded, 380 mm flanged)[2]	**2**

[1] Available with Probe version options B ... D, F, G only [≥ 500 mm (19.69 inch)].

[2] Available with Probe version options C, D, and G only [≥ 750 mm (29.53 inch)].

© Siemens 2020

Selection and ordering data	Order code
Further designs	
Please add "**-Z**" to Article No. and specify Order code(s).	
Total insertion length: enter the total insertion length in plain text description[1]	**Y01**
Stainless steel tag [70 x 13 mm (2.75 x 0.5 inch)]: Measuring-point number/identification (max. 27 characters) specify in plain text	**Y15**
Manufacturer's test certificate: M to DIN 55350, Part 18 and to ISO 9000	**C11**
Material Inspection Certificate Type 3.1 per EN 10204	**C12**
INMETRO[2]	**E34**
Operating Instructions	
All literature is available to download for free, in a range of languages, at	
http://www.siemens.com/processinstrumentation/documentation.	
Accessories	See page **4/69**

[1] Not available with Probe length option B.

[2] Available only with Approvals options C, D, E.

© Siemens 2020

Characteristic curves

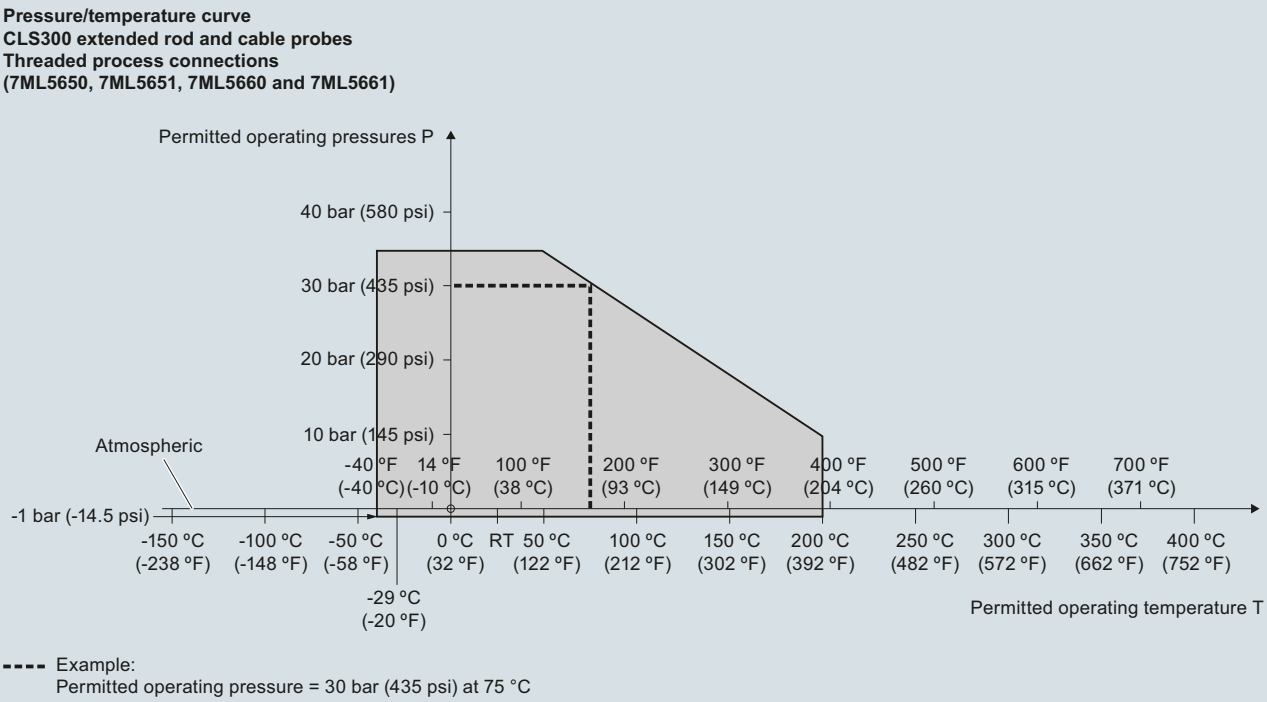

Pointek CLS300 process pressure/temperature derating curves (7ML5650, 7ML5651, 7ML5660, and 7ML5661)

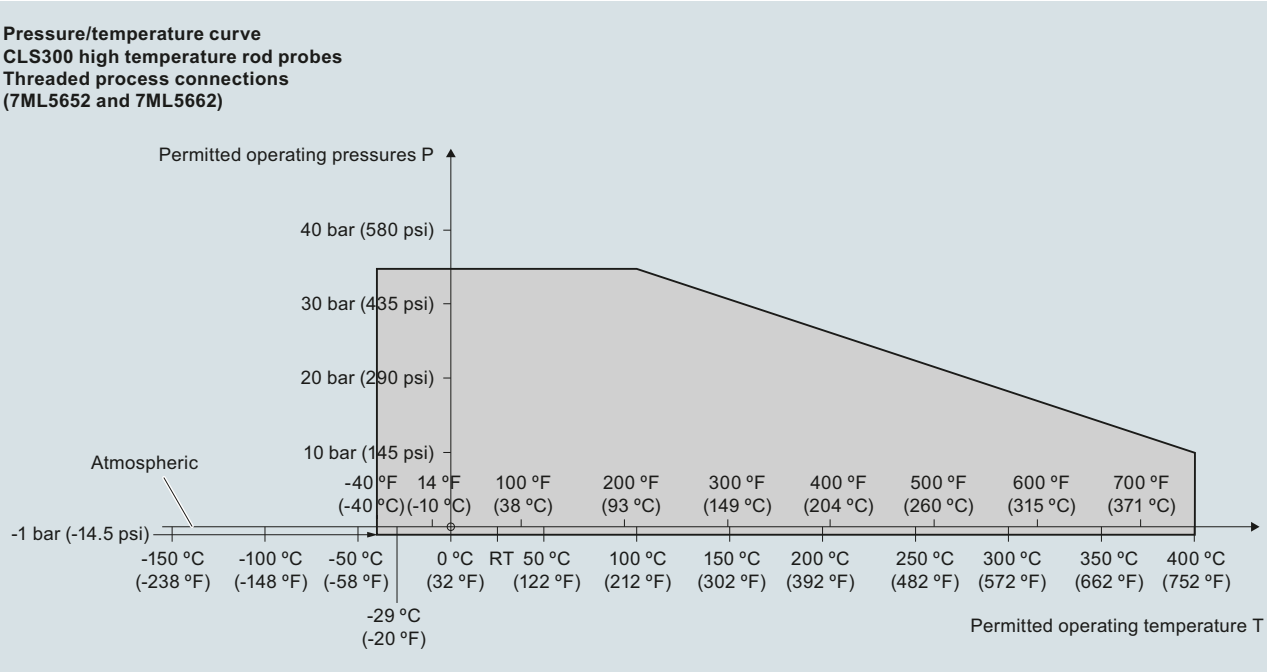

Pointek CLS300 process pressure/temperature derating curves (7ML5652 and 7ML5662)

© Siemens 2020

Characteristic curves (continued)

Pressure/temperature curve
CLS300 extended rod and cable probes
ASME flanged process connections
(7ML5650, 7ML5651, 7ML5660 and 7ML5661)

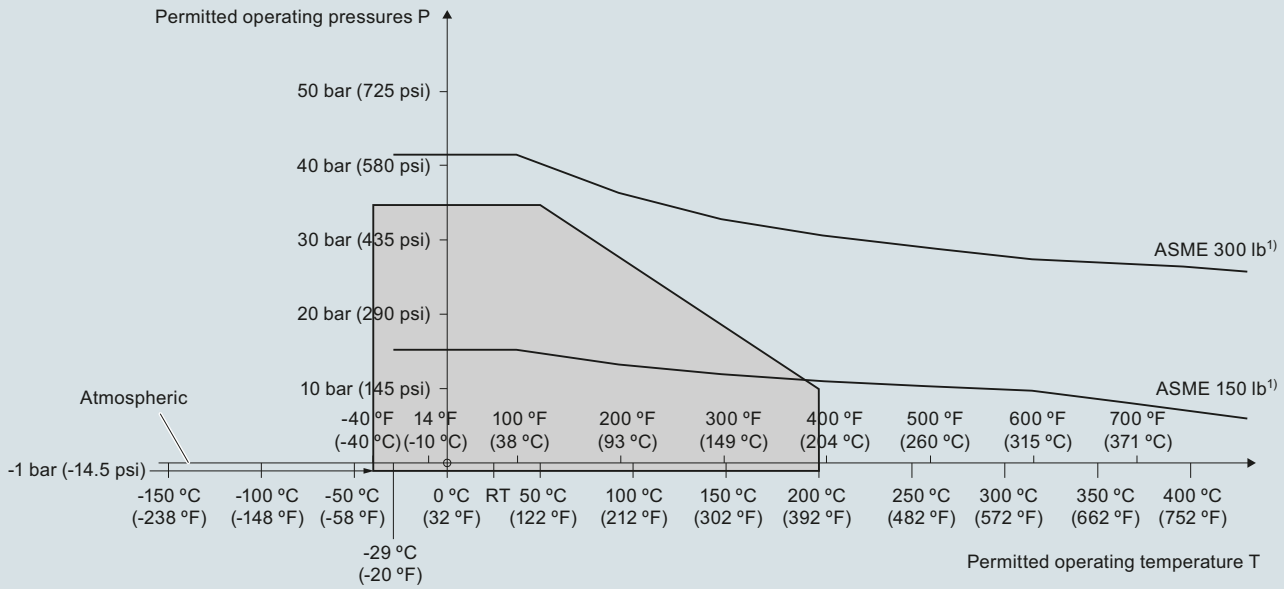

1) The curve denotes the minimum allowable flange class for the shaded area below.

Pointek CLS300 process pressure/temperature derating curves (7ML5650, 7ML5651, 7ML5660, and 7ML5661)

© Siemens 2020

Characteristic curves (continued)

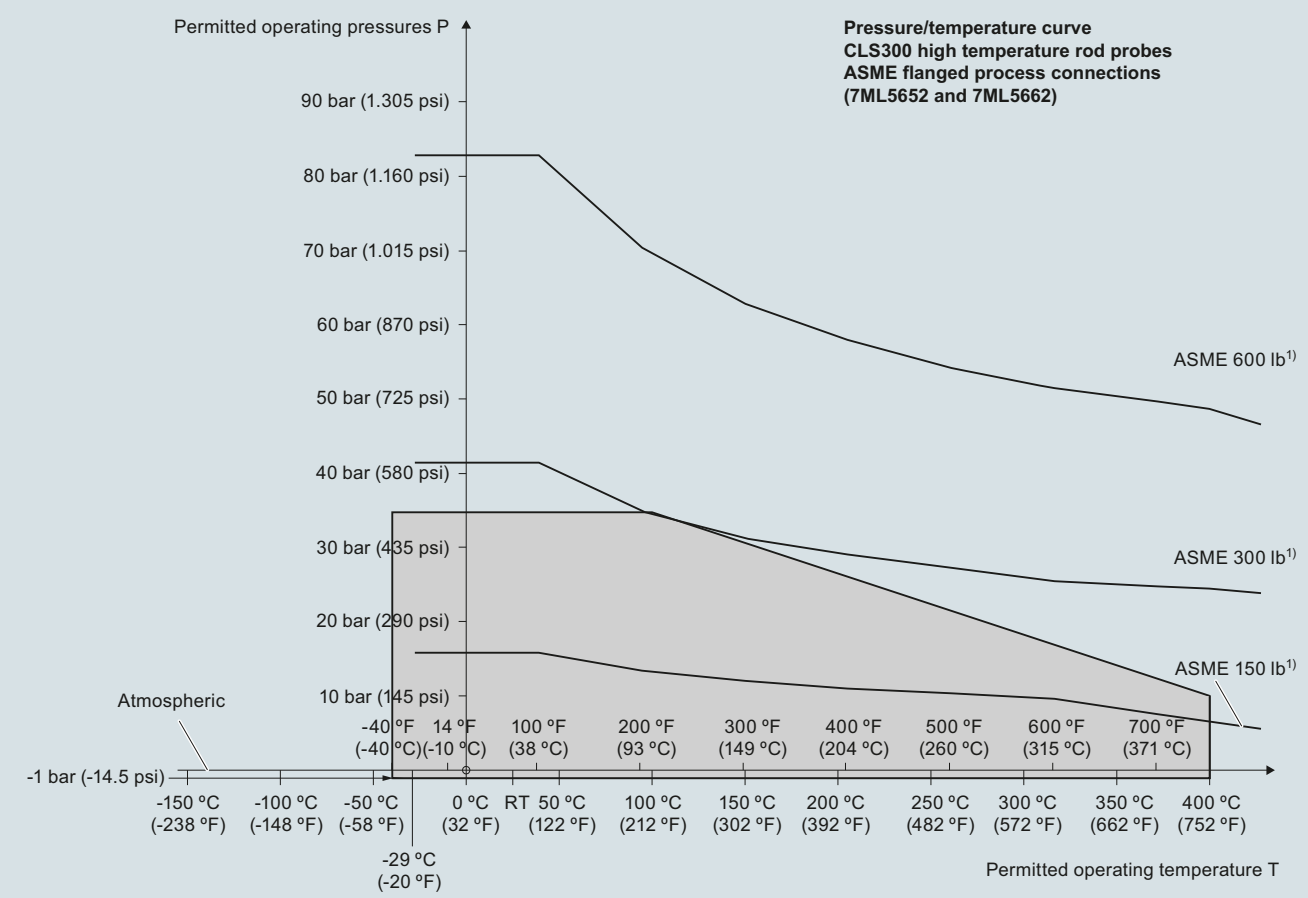

1) The curve denotes the minimum allowable flange class for the shaded area below.

Pointek CLS300 process pressure/temperature derating curves (7ML5652 and 7ML5662)

© Siemens 2020

Characteristic curves (continued)

Pressure/temperature curve
CLS300 extended rod and cable probes
EN flanged process connections
(7ML5650, 7ML5651, 7ML5660 and 7ML5661)

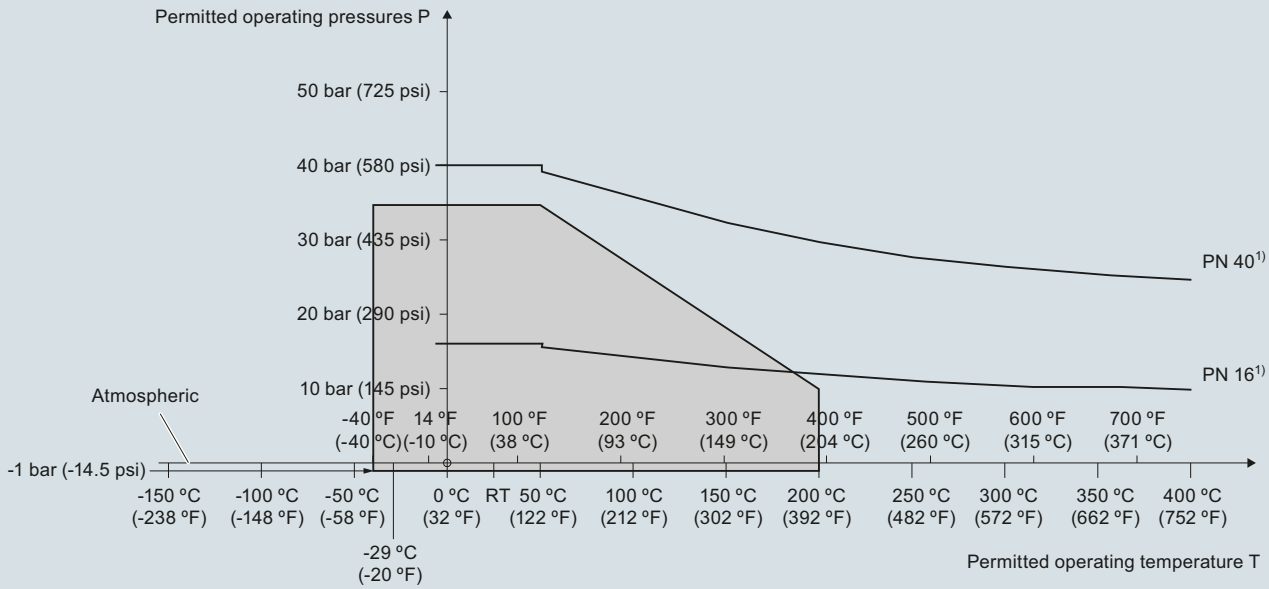

[1)] The curve denotes the minimum allowable flange class for the shaded area below.

Pointek CLS300 process pressure/temperature derating curves (7ML5650, 7ML5651, 7ML5660, and 7ML5661)

Pressure/Temperature Curve
CLS300 High Temperature Rod Probes
EN Flanged Process Connections (7ML5652 and 7ML5662)

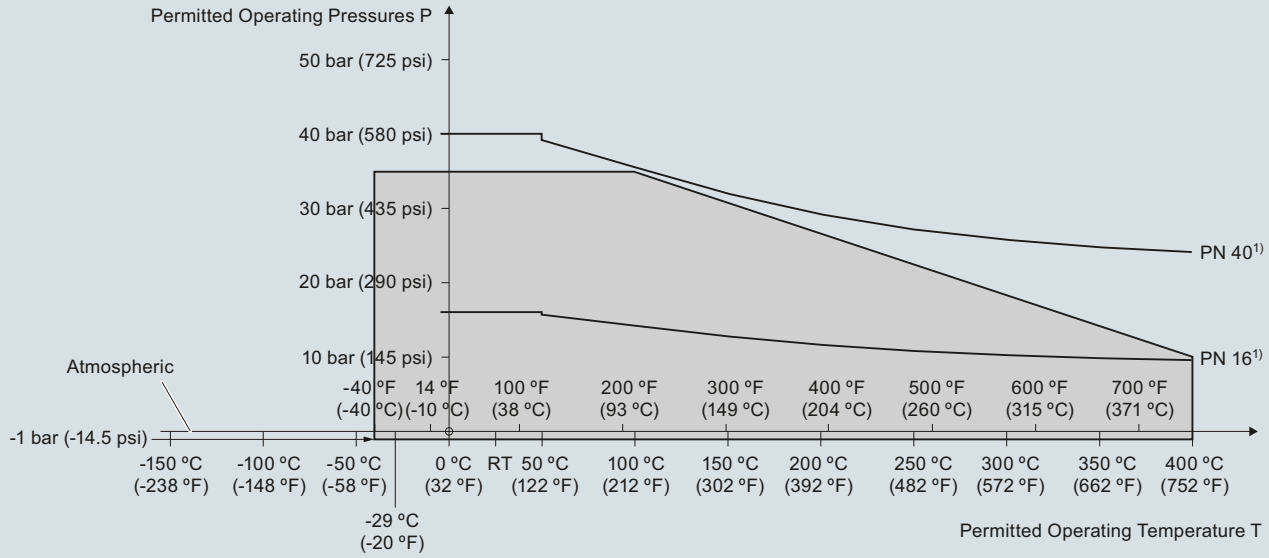

[1)] The curve denotes the minimum allowable flange class for the shaded area below.

Pointek CLS300 process pressure/temperature derating curves (7ML5652 and 7ML5662)

© Siemens 2020

Dimensional drawings

Rod version
Threaded (7ML5650 and 7ML5660)

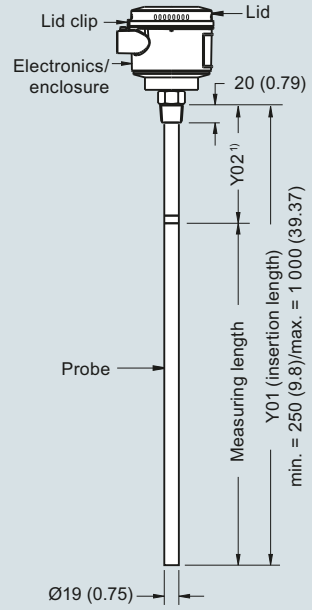

High temperature rod version
Threaded (7ML5652 and 7ML5662)

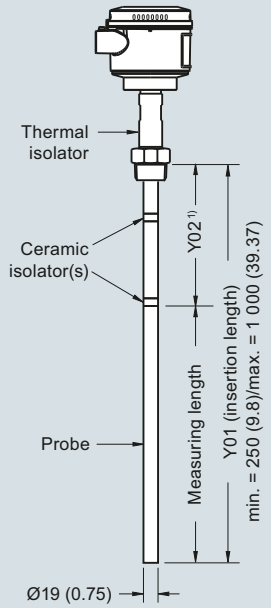

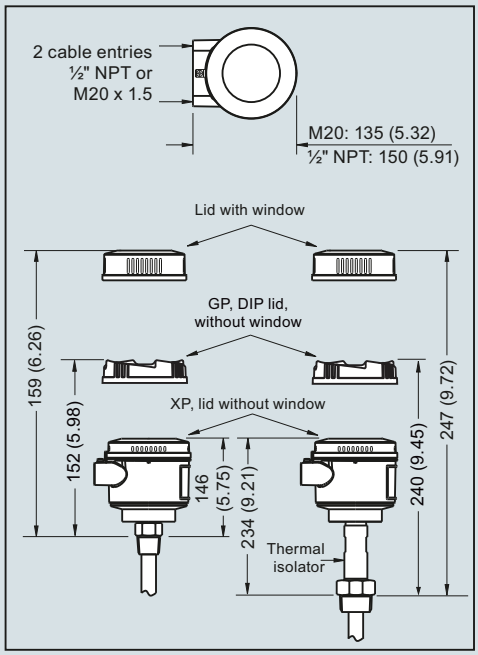

Cable version, non-insulated
Threaded (7ML5651 and 7ML5661)

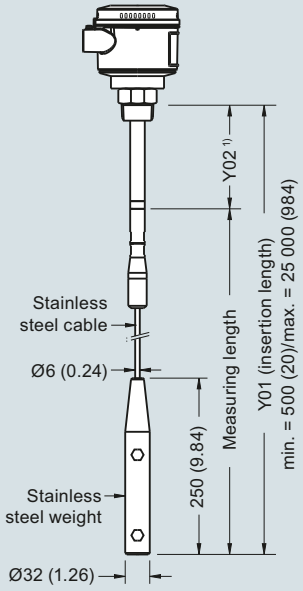

Cable version, insulated
Threaded (7ML5651 and 7ML5661)

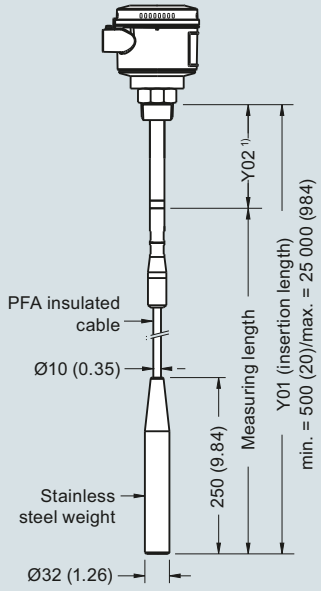

Note:

1) Extended Active Shield (Y02): standard length 125 (4.92). Optional active shield lengths: 250 (9.84) or 400 (15.75).

Pointek CLS300 threaded process connections, dimensions in mm (inch)

© Siemens 2020

Dimensional drawings (continued)

Rod version
Welded flange (7ML5650 and 7ML5660)

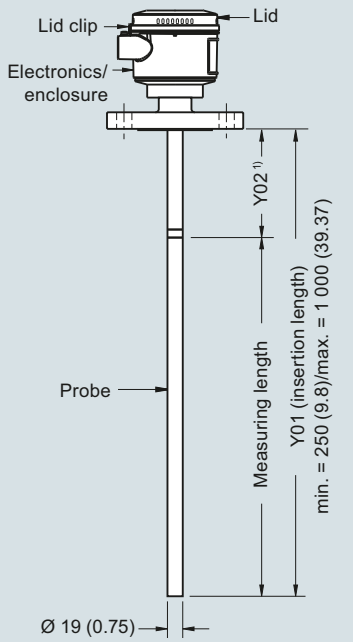

High temperature rod version
Welded flange
(7ML5652 and 7ML5662)

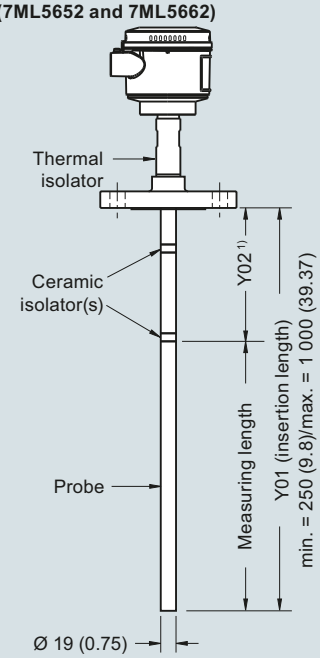

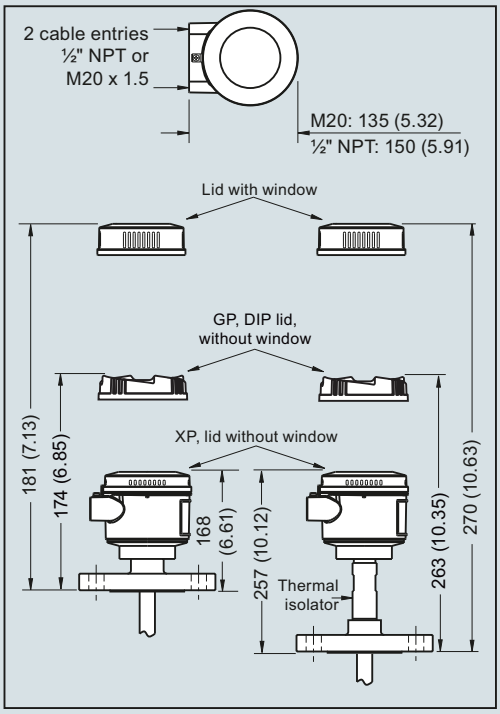

Cable version, non-insulated
Welded flange (7ML5651 and 7ML5661)

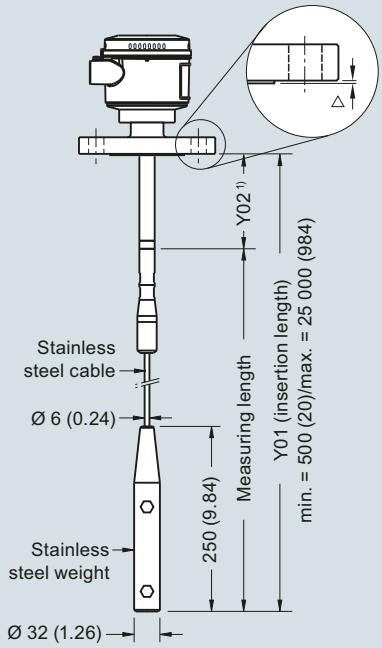

Cable version, insulated
Welded flange (7ML5651 and 7ML5661)

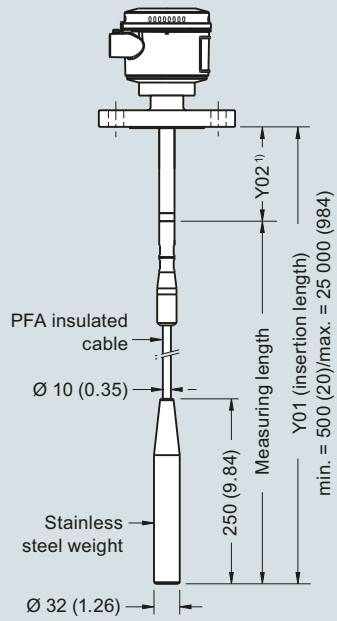

Flange Facing (raised face)	
Flange Class	**Facing thickness**
△ ASME 150/300	2 (0.08)
△ ASME 600/900	7 (0.28)
△ PN16/40	2 (0.08)

Note:

1) Extended Active Shield (Y02): standard length 105 (4.13). Optional active shield lengths: 230 (9.06) or 380 (14.96).
Insertion length does not include any raised face/gasket face dimension (see Flange Facing Table above)

Pointek CLS300 flanged process connections, dimensions in mm (inch)

© Siemens 2020

Circuit diagrams

Wiring: Pointek CLS300 standard

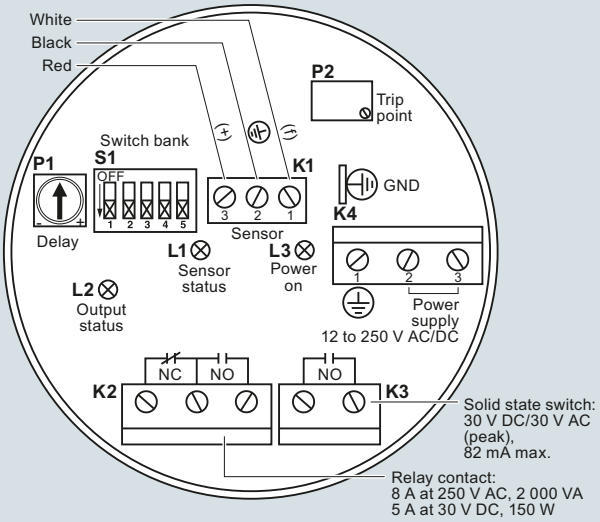

Notes:
- Identification label is on underside of lid. Switch and potentiometer settings are for illustration purposes only (refer to operation/setup in manual).
- All field wiring must have insulation suitable for at least 250 V.
- Relay contact terminals are for use with equipment having no accessible live parts and wiring having insulation suitable for at least 250 V.
- Maximum working voltage between adjacent relay contacts shall be 250 V.
- Refer to the Instruction manual or contact Siemens representative for detailed wiring information.

Wiring: Pointek CLS300 digital

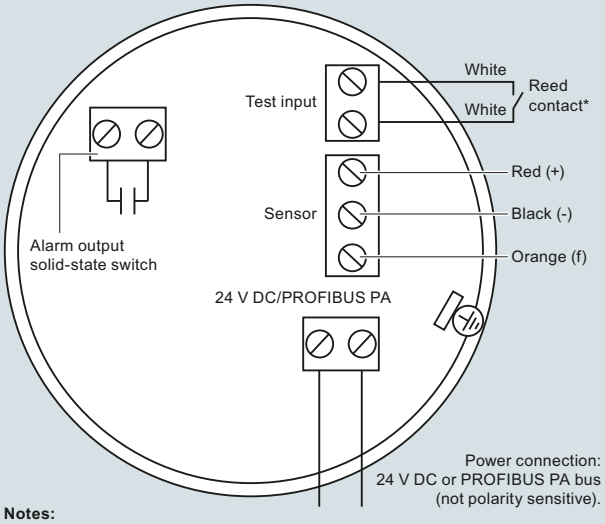

Notes:
Refer to the instruction manual or contact a Siemens representative for detailed wiring information.

***Magnet activated sensor test**
A magnet can be used to test the sensor without opening the lid of the Pointek CLS300 digital version. Bring the magnet close to the test area indicated on the enclosure. The sensor test starts and finishes automatically after 10 seconds.

Pointek CLS300 connections

© Siemens 2020

Overview

Pointek CLS300 (digital version) is an inverse frequency shift capacitance level and material detection switch with optional rod/cable choices and configurable output. It is ideal for detecting liquids, solids, slurries, foam, and interfaces in demanding conditions where high pressure and temperatures are present and has the ability to tune out buildup on the probe. The digital version includes PROFIBUS PA, an LCD display, and advanced diagnostic features.

Benefits

- Active-Shield technology so measurement is unaffected by material buildup or nozzle interference in active shield section
- Performs in extremely abrasive conditions because of solid rod construction
- Push-button calibration, full-function diagnostics
- High sensitivity allows installation in a wide range of liquids, solids or slurry applications
- Integral LCD display allows for easy menu-driven setup
- PROFIBUS PA communication (SIMATIC PDM compatible)

Application

Pointek CLS300 digital version provides an integral LCD display for stand-alone use, with PROFIBUS PA communication (Profile version 3.0, Class B) when required. Solid-state switch alarm is standard.

The robust design of CLS300 makes it specifically applicable for heavy solids applications where abrasive materials occur as in the mining industry.

The fully potted electronics are unaffected by condensation, dust or vibration.

Wetted parts are made of stainless steel with a PFA shield for high chemical resistance, and of ceramic and stainless steel for high temperature version. Materials with low or high dielectric constants can be accurately detected. The unique Active Shield suppresses interference from material buildup or long installation nozzles.

The unique modular design of the Pointek CLS300 provides a wide range of configurations, process connections, extensions and approvals to meet the temperature and pressure requirements of specific applications. The modular design makes ordering easier and reduces stocking requirements. A wide range of probe configurations are available, including rod and cable versions.

- Key Applications: liquids, slurries, bulk solids, relatively high pressure and temperature, hazardous areas, milling and mining applications

Configuration

Installation

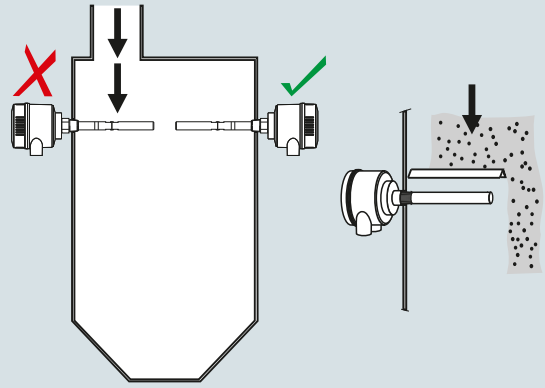

Keep unit out of path of falling material, or protect probe from falling material.

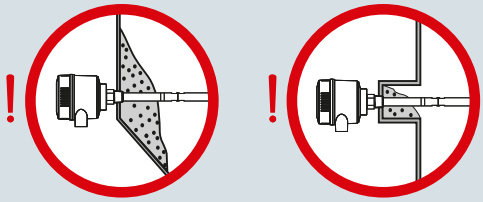

Build up of material in active shield area does not affect switch operation.

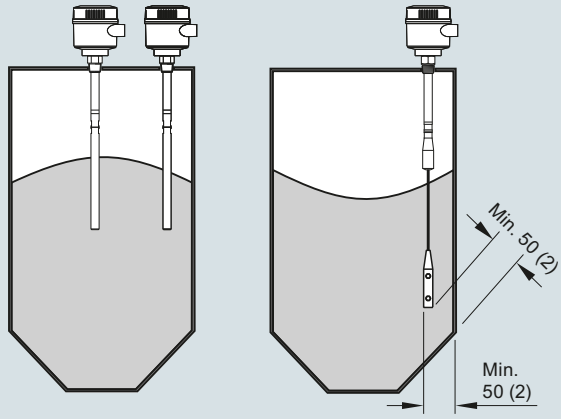

Install probe at least 50 (2) from tank wall.
Note angle of repose and adjust accordingly.

Pointek CLS300 installation, dimensions in mm (inch)

© Siemens 2020

Technical specifications

Mode of operation	
Measuring principle	Inverse frequency shift capacitive level detection
Input	
Measured variable	Change in picoFarad (pF)
Output	
Solid-state output	
• Output	Galvanically isolated
• Protection	Against reversed polarity (bipolar)
• Max. switching voltage	• 30 V (DC) • 30 V peak (AC)
• Max. load current	82 mA
• Voltage drop	< 1 V, typical at 50 mA
• Time delay (pre or post switching)	Programmable by user (0 ... 100 s)
Fail-safe mode	Min. or max.
Connection	Removable terminal block
Accuracy	
Resolution	
• Min. sensitivity (pF)	1 % change in actual capacitance
• Max. temperature error	0.2 % of actual capacitance value
Rated operating conditions[1]	
Installation conditions	
• Location	Indoor/outdoor
Ambient conditions	
• Ambient temperature	-40 ... +85 °C (-40 ... +185 °F)[2]
• Storage temperature	-40 ... +85 °C (-40 ... +185 °F)
Medium conditions	Liquids, bulk solids, slurries, interfaces, and applications with viscous materials
• Relative dielectric constant ε_r	Min. 1.5
• Process temperature	
- Rod/Cable version	-40 ... +200 °C (-40 ... +392 °F)[2]
- High Temperature version	-40 ... +400 °C (-40 ... +752 °F)
• Process pressure[3]	-1 ... +35 bar g (-14.6 ... +511 psi g)
Design	
Material (enclosure)	Powder-coated aluminum with gasket
Degree of protection	Standard: Type 4/NEMA 4/IP65 Optional: Type 4/NEMA 4/IP68
Cable inlet	2 x M20 x 1.5 thread (option: 2 x ½" NPT conduit entry including 1 plugged entry)
Controls and displays	
Local display	LCD
Configuration	• Locally, using 3 button keypad (for standalone operation) • Remotely, using SIMATIC PDM (for installation on a network)

Power supply	
Bus voltage (at process connection)	• Standard: 12 ... 30 V DC • Intrinsically Safe: 12 ... 24 V DC
Current consumption	12.5 mA
Certificates and approvals	
General Purpose	CSA, FM, CE, RCM
Dust Ignition Proof	ATEX II 1/2 D, 2 D IP6X T100 °C
Flameproof Enclosure With IS Probe	ATEX II 1/2 G EEx d[ia] IIC T6 ... T4 ATEX II 1/2 D T100 °C
Dust Ignition Proof With IS Probe	CSA/FM Class II, Div. 1, Groups E, F, G CSA/FM Class III T4
Intrinsically Safe[4]	ATEX II 1 G EEx ia IIC T6 ... T4 ATEX II 1/2 D, 2 D IP6X T100 °C CSA/FM Class I, Div. 1, Groups A, B, C, D CSA/FM Class II, Div. 1, Groups E, F, G CSA/FM Class III T4
Non-incendive	CSA/FM Class I, Div. 2, Groups A, B, C, D CSA/FM Class II, Div. 2, Groups F, G CSA/FM Class III T4 or T6
Explosion Proof with IS Probe	CSA/FM Class I, Div. 1, Groups A, B, C, D CSA/FM Class II, Div. 1, Groups E, F, G CSA/FM Class III T4
Marine	Lloyds Register of Shipping, Categories ENV1, ENV2, and ENV5
Others	Pattern Approval (China)
Communication	PROFIBUS PA (IEC 61158 CPF3 CP3/2) Bus physical layer: IEC 61158-2 MBP-(IS) Device profile: PROFIBUS PA profile for Process Control Devices Version 3.0, Class B FISCO field device

1) When operation is in areas classified as hazardous, observe restrictions according to relevant certificate. See also Pressure/Temperature curves starting on page 5/57.

2) Thermal isolator is used if process connection temperature exceeds 85 °C (185 °F)

3) Pressure rating of process seal is temperature dependent. See Pressure/Temperature curves starting on page 5/57.

4) Barrier or Intrinsically Safe power supply required for Intrinsically Safe protection

Design: Probe			
	Rod version	**High Temperature version**	**Cable version**
Length	Min. 250 mm (9.8 inch), max. 1 000 mm (40 inch)	Min. 250 mm (9.8 inch), max. 1 000 mm (40 inch)	Min. 1 000 mm (40 inch), max. 25 000 mm (984 inch)
Sensor wetted parts	PFA (no insulation on active probe), 316L stainless steel, PEEK isolators	Ceramic (ZrO_2[1]) isolators (no insulation on active probe), 316L stainless steel	316 stainless steel, optional PFA, PEEK isolators
O-ring seal material	FKM (optional FFKM)[2]	Graphite[2]	FKM (optional FFKM)[2]
Thermal isolator	Optional	Standard	Optional
Extension	User selectable length	User selectable length	User selectable cable length

1) Zirconium Oxide

2) For caustic materials, consult a local sales person for alternative O-rings. For more information, please visit http://www.automation.siemens.com/aspa_app.

© Siemens 2020

Selection and ordering data

	Article No.
Pointek CLS300 RF Capacitance point level switch, digital, rod design. ↗	**7ML5660-** ■ ■ ■ ■ ■ - ■ ■ ■ ■
Detects level and interface in aggressive liquids, solids, slurries, and foam. Adjustable, 1 m (3.28 ft), insertion, adaptable sensitivity, and active shield to tune out build-up on probe. With display and digital communications.	
↗ Click on the Article No. for the online configuration in the PIA Life Cycle Portal.	
Process connection	
Threaded, 316L stainless steel	
¾" NPT [(Taper), ANSI/ASME B1.20.1]	0 A
1" NPT [(Taper), ANSI/ASME B1.20.1]	0 B
1¼" NPT [(Taper), ANSI/ASME B1.20.1]	0 C
1½" NPT [(Taper), ANSI/ASME B1.20.1]	0 D
R ¾" [(BSPT), EN 10226/PT (JIS-T), JIS B 0203]	1 A
R 1" [(BSPT), EN 10226/PT (JIS-T), JIS B 0203]	1 B
R 1½" [(BSPT), EN 10226/PT (JIS-T), JIS B 0203]	1 D
G ¾" [(BSPP), EN ISO 228-1/PF (JIS-P), JIS B 0202]	3 A
G 1" [(BSPP), EN ISO 228-1/PF (JIS-P), JIS B 0202]	3 B
G 1½" [(BSPP), EN ISO 228-1/PF (JIS-P), JIS B 0202]	3 D
Welded flange, 316L stainless steel, raised face	
1" ASME, 150 lb	5 A
1" ASME, 300 lb	5 B
1" ASME, 600 lb	5 C
1½" ASME, 150 lb	5 D
1½" ASME, 300 lb	5 E
1½" ASME, 600 lb	5 F
2" ASME, 150 lb	5 G
2" ASME, 300 lb	5 H
2" ASME, 600 lb	5 J
3" ASME, 150 lb	5 K
3" ASME, 300 lb	5 L
3" ASME, 600 lb	5 M
4" ASME, 150 lb	5 N
4" ASME, 300 lb	5 P
4" ASME, 600 lb	5 Q
Welded flange, 316L stainless steel, Type A flat faced	
DN 25, PN 16	6 A
DN 25, PN 40	6 B
DN 40, PN 16	6 C
DN 40, PN 40	6 D
DN 50, PN 16	6 E
DN 50, PN 40	6 F
DN 80, PN 16	6 G
DN 80, PN 40	6 H
DN 100, PN 16	6 J
DN 100, PN 40	6 K
(Note: Flange bolting patterns and facings dimensionally correspond to the applicable ASME B16.5 or EN 1092-1 standard.)	
Probe length	
(length from flange face) (threaded lengths include process thread)	
Note: No Y01 needed in Order code for standard lengths	
Standard version, rod 350 mm (13.78 inch)	A
Extended rod, length 500 mm (19.69 inch)	B
Extended rod, length 750 mm (29.53 inch)	C
Extended rod, length 1 000 mm (39.37 inch)	D

	Article No.
Pointek CLS300 RF Capacitance point level switch, digital, rod design.	**7ML5660-** ■ ■ ■ ■ ■ - ■ ■ ■ ■
Detects level and interface in aggressive liquids, solids, slurries, and foam. Adjustable, 1 m (3.28 ft), insertion, adaptable sensitivity, and active shield to tune out build-up on probe. With display and digital communications.	
Add Order code Y01 and plain text: "Insertion length ... mm"	
Extended rod, factory adjusted length 250 ... 499 mm (9.8 ... 19.65 inch)	E
Extended rod, factory adjusted length 500 ... 749 mm (19.69 ... 29.49 inch)	F
Extended rod, factory adjusted length 750 ... 999 mm (29.53 ... 39.3 inch)	G
Thermal isolator	
Without thermal isolator	0
With thermal isolator [for process connection temperatures over 85 °C (185 °F)]	1
Wetted seals	
FKM	0
FFKM [for process temperatures above -20 °C (-4 °F)]	1
Probe material	
316L stainless steel with PFA lining and PEEK isolators	0
Approvals	
Dust Ignition Proof: CE, RCM, ATEX II ½ D, 2 D IP6X T100 °C	B
Intrinsically Safe[1] CE, RCM, ATEX II 1 G EEx ia IIC T6 ... T4, ATEX II ½ D, 2 D IP6X T100 °C	C
Flameproof Enclosure with IS Probe: CE, RCM, ATEX II ½ G EEx d[ia] IIC T6 ... T4, ATEX II ½D T100 °C	D
Dust Ignition Proof with IS Probe: CSA/FM Class II, Div. 1, Groups E, F, G CSA/FM Class III T4	E
Intrinsically Safe[1] CSA/FM Class I, Div. 1, Groups A, B, C, D CSA/FM Class II, Div. 1, Groups E, F, G CSA/FM Class III T4	F
Explosion Proof Enclosure with IS Probe: CSA/FM Class I, Div. 1, Groups A, B, C, D CSA/FM Class II, Div. 1, Groups E, F, G CSA/FM Class III T4	G
General Purpose (CSA, FM)	H
General Purpose (CSA, FM, CE, RCM)	J
Enclosure and Lid	
Aluminum epoxy coated	
2 x ½" NPT via adapter - cable inlet, IP65	A
2 x M20 x 1.5 cable inlet, IP65	B
2 x ½" NPT via adapter - cable inlet, IP68	C
2 x M20 x 1.5 cable inlet, IP68	D
Active shield length	
Standard length - (125 mm threaded, 105 mm flanged)	0
Extended shield - (250 mm threaded, 230 mm flanged)[2]	1
Extended shield - (400 mm threaded, 380 mm flanged)[3]	2

[1] Barrier or Intrinsically Safe power supply required for Intrinsically Safe protection.

[2] Available with Probe version options B ... D, F, G only [≥ 500 mm (19.69 inch)].

[3] Available with Probe version options C, D, and G only [≥ 750 mm (29.53 inch)].

© Siemens 2020

Selection and ordering data

	Order code
Further designs	
Please add "**-Z**" to Article No. and specify Order code(s).	
Total insertion length: enter the total insertion length in plain text description	**Y01**
Stainless steel tag [70 x 13 mm (2.75 x 0.5 inch)]: Measuring-point number/identification (max. 27 characters) specify in plain text	**Y15**
Manufacturer's test certificate: M to DIN 55350, Part 18 and to ISO 9000	**C11**
Material inspection Certificate Type 3.1 per EN 10204	**C12**
INMETRO[1)]	**E34**
Operating Instructions	
All literature is available to download for free, in a range of languages, at	
http://www.siemens.com/processinstrumentation/documentation.	
Accessories	**See page 4/69**

[1)] Available only with Approvals options B and D.

	Article No.								
Pointek CLS300 RF Capacitance point level switch, digital, cable design. ↗	**7ML5661-**								
Detects level and interface in aggressive liquids, solids, slurries, and foam. Cable extension options to 25 m (82.02 ft), adaptable sensitivity, with active shield to tune out build-up on probe. With display and digital communications.	■	■	■	■	■	-	■	■	■
↗ Click on the Article No. for the online configuration in the PIA Life Cycle Portal.									
Process connection									
Threaded, 316L stainless steel									
1¼" NPT [(Taper), ANSI/ASME B1.20.1]	**0**	**C**							
1½" NPT [(Taper), ANSI/ASME B1.20.1]	**0**	**D**							
R 1½" [(BSPT), EN 10226/PT (JIS-T), JIS B 0203]	**1**	**D**							
G 1½" [(BSPP), EN ISO 228-1/PF (JIS-P), JIS B 0202]	**3**	**D**							
Welded flange, 316L stainless steel, raised face									
1½" ASME, 150 lb	**5**	**D**							
1½" ASME, 300 lb	**5**	**E**							
1½" ASME, 600 lb	**5**	**F**							
2" ASME, 150 lb	**5**	**G**							
2" ASME, 300 lb	**5**	**H**							
2" ASME, 600 lb	**5**	**J**							
3" ASME, 150 lb	**5**	**K**							
3" ASME, 300 lb	**5**	**L**							
3" ASME, 600 lb	**5**	**M**							
4" ASME, 150 lb	**5**	**N**							
4" ASME, 300 lb	**5**	**P**							
4" ASME, 600 lb	**5**	**Q**							
Welded flange, 316L stainless steel, Type A flat faced									
DN 40, PN 16	**6**	**C**							
DN 40, PN 40	**6**	**D**							
DN 50, PN 16	**6**	**E**							
DN 50, PN 40	**6**	**F**							
DN 80, PN 16	**6**	**G**							
DN 80, PN 40	**6**	**H**							
DN 100, PN 16	**6**	**J**							
DN 100, PN 40	**6**	**K**							
(Note: Flange bolting patterns and facings dimensionally correspond to the applicable ASME B16.5 or EN 1092-1 standard.)									
Probe length									
(length from flange face) (threaded lengths include process thread)									
Note: No Y01 needed in Order code for standard lengths									
Extended cable, 3 000 mm (118.11 inch), length can be shortened by customer			**A**						
Extended cable, 6 000 mm (236.22 inch), length can be shortened by customer			**B**						
Add Order code Y01 and plain text: "Insertion length ... mm"									
Extended cable, 500 ... 1 000 mm (19.69 ... 39.37 inch)			**E**						
Extended cable, 1 001 ... 5 000 mm (39.41 ... 196.85 inch)			**F**						
Extended cable, 5 001 ... 10 000 mm (196.89 ... 393.70 inch)			**G**						
Extended cable, 10 001 ... 15 000 mm (393.74 ... 590.55 inch)			**H**						
Extended cable, 15 001 ... 20 000 mm (590.59 ... 787.40 inch)			**J**						
Extended cable, 20 001 ... 25 000 mm (787.44 ... 984.25 inch)			**K**						

© Siemens 2020

Selection and ordering data

	Article No.
Pointek CLS300 RF Capacitance point level switch, digital, cable design.	**7ML5661-** ■ ■ ■ ■ ■ - ■ ■ ■ ■
Detects level and interface in aggressive liquids, solids, slurries, and foam. Cable extension options to 25 m (82.02 ft), adaptable sensitivity, with active shield to tune out build-up on probe. With display and digital communications.	
Thermal isolator	
Without thermal isolator	0
With thermal isolator [for process connection temperatures over 85 °C (185 °F)]	1
Wetted seals	
FKM	0
FFKM [for process temperatures above -20 °C (-4 °F)]	1
Probe material	
Bare 316L stainless steel cable, PEEK isolators and 316L stainless steel cable weight	0
PFA coated cable, PEEK isolators and 316L stainless steel cable weight	1
Approvals	
Dust Ignition Proof: CE, RCM, ATEX II ½ D, 2 D IP6X T100 °C	B
Intrinsically Safe[1] CE, RCM, ATEX II 1 G EEx ia IIC T6 ... T4, ATEX II ½ D, 2 D IP6X T100 °C	C
Flameproof Enclosure with IS Probe: CE, RCM, ATEX II ½ G EEx d[ia] IIC T6 ... T4, ATEX II ½ D T100 °C	D
Intrinsically Safe[1] CSA/FM Class I, Div. 1, Groups A, B, C, D CSA/FM Class II, Div. 1, Groups E, F, G CSA/FM Class III T4	F
Explosion Proof Enclosure with IS Probe: CSA/FM Class I, Div. 1, Groups A, B, C, D CSA/FM Class II, Div. 1, Groups E, F, G CSA/FM Class III T4	G
General Purpose (CSA, FM)	H
General Purpose (CSA, FM, CE, RCM)	J
Enclosure and Lid	
Aluminum epoxy coated	
2 x ½" NPT via adapter - cable inlet, IP65	A
2 x M20 x 1.5 cable inlet, IP65	B
2 x ½" NPT via adapter - cable inlet, IP68	C
2 x M20 x 1.5 cable inlet, IP68	D
Active shield length	
Standard length - (125 mm threaded, 105 mm flanged)	0
Extended shield - (250 mm threaded, 230 mm flanged)	1
Extended shield - (400 mm threaded, 380 mm flanged)[2]	2

[1] Barrier or Intrinsically Safe power supply required for Intrinsically Safe protection.

[2] Available with Probe version options A, B, F ... K, only [≥ 1 000 mm (39.7 inch)].

	Order code
Further designs	
Please add "**-Z**" to Article No. and specify Order code(s).	
Total insertion length: enter the total insertion length in plain text description	**Y01**
Stainless steel tag [70 x 13 mm (2.75 x 0.5 inch)]: Measuring-point number/identification (max. 27 characters) specify in plain text	**Y15**
Manufacturer's test certificate: M to DIN 55350, Part 18 and to ISO 9000	**C11**
Material inspection Certificate Type 3.1 per EN 10204	**C12**
INMETRO[1]	**E34**
Operating Instructions	
All literature is available to download for free, in a range of languages, at	
http://www.siemens.com/processinstrumentation/documentation.	
Accessories	**See page 4/69**

[1] Available only with Approvals options B and D.

© Siemens 2020

Selection and ordering data

	Article No.
Pointek CLS300 RF Capacitance point level switch, digital, high temperature design. ↗	**7ML5662-**
Detects level and interface in aggressive liquids, solids, slurries, and foam. Adjustable, 1 m (3.28 ft), insertion, adaptable sensitivity, with active shield to tune out build-up on probe. With display and digital communications.	■ ■ ■ 0 ■ - ■ ■ ■ ■
↗ Click on the Article No. for the online configuration in the PIA Life Cycle Portal.	
Process connection	
Threaded, 316L stainless steel	
¾" NPT [(Taper), ANSI/ASME B1.20.1]	0 A
1" NPT [(Taper), ANSI/ASME B1.20.1]	0 B
1¼" NPT [(Taper), ANSI/ASME B1.20.1]	0 C
1½" NPT [(Taper), ANSI/ASME B1.20.1]	0 D
R ¾" [(BSPT), EN 10226/PT (JIS-T), JIS B 0203]	1 A
R 1" [(BSPT), EN 10226/PT (JIS-T), JIS B 0203]	1 B
R 1½" [(BSPT), EN 10226/PT (JIS-T), JIS B 0203]	1 D
G ¾" [(BSPP), EN ISO 228-1/PF (JIS-P), JIS B 0202]	3 A
G 1" [(BSPP), EN ISO 228-1/PF (JIS-P), JIS B 0202]	3 B
G 1½" [(BSPP), EN ISO 228-1/PF (JIS-P), JIS B 0202]	3 D
Welded flange, 316L stainless steel, raised face	
1" ASME, 150 lb	5 A
1" ASME, 300 lb	5 B
1" ASME, 600 lb	5 C
1½" ASME, 150 lb	5 D
1½" ASME, 300 lb	5 E
1½" ASME, 600 lb	5 F
2" ASME, 150 lb	5 G
2" ASME, 300 lb	5 H
2" ASME, 600 lb	5 J
3" ASME, 150 lb	5 K
3" ASME, 300 lb	5 L
3" ASME, 600 lb	5 M
4" ASME, 150 lb	5 N
4" ASME, 300 lb	5 P
4" ASME, 600 lb	5 Q
Welded flange, 316L stainless steel, Type A flat faced	
DN 25, PN 16	6 A
DN 25, PN 40	6 B
DN 40, PN 16	6 C
DN 40, PN 40	6 D
DN 50, PN 16	6 E
DN 50, PN 40	6 F
DN 80, PN 16	6 G
DN 80, PN 40	6 H
DN 100, PN 16	6 J
DN 100, PN 40	6 K
(Note: Flange bolting patterns and facings dimensionally correspond to the applicable ASME B16.5 or EN 1092-1 standard.)	
Probe length	
(length from flange face) (threaded lengths include process thread)	
Note: No Y01 needed in Order code for standard lengths	
Standard version rod, 350 mm (13.78 inch)	A
Extended rod, length 500 mm (19.69 inch)	B
Extended rod, length 750 mm (29.53 inch)	C
Extended rod, length 1 000 mm (39.37 inch)	D

	Article No.
Pointek CLS300 RF Capacitance point level switch, digital, high temperature design.	**7ML5662-**
Detects level and interface in aggressive liquids, solids, slurries, and foam. Adjustable, 1 m (3.28 ft), insertion, adaptable sensitivity, with active shield to tune out build-up on probe. With display and digital communications.	■ ■ ■ 0 ■ - ■ ■ ■ ■
Add Order code Y01 and plain text: "Insertion length ... mm"	
Extended rod, factory adjusted length 250 ... 499 mm (9.8 ... 19.65 inch)	E
Extended rod, factory adjusted length 500 ... 749 mm (19.69 ... 29.49 inch)	F
Extended rod, factory adjusted length 750 ... 999 mm (29.53 ... 39.3 inch)	G
Wetted seals	
Graphite	0
Probe material	
316L stainless steel with ceramic (ZrO_2)isolators	0
Approvals	
Dust Ignition Proof CE, RCM, ATEX II ½ D, 2 D IP6X T100 °C	B
Intrinsically Safe[1] CE, RCM, ATEX II 1 G EEx ia IIC T6 ... T4, ATEX II ½ D, 2 D IP6X T100 °C	C
Flameproof Enclosure with IS Probe: CE, RCM, ATEX II ½ G EEx d[ia] IIC T6 ... T4, ATEX II ½ D T100 °C	D
Intrinsically Safe[1] CSA/FM Class I, Div. 1, Groups A, B, C, D CSA/FM Class II, Div. 1, Groups E, F, G CSA/FM Class III T4	F
Explosion Proof Enclosure with IS Probe: CSA/FM Class I, Div. 1, Groups A, B, C, D CSA/FM Class II, Div. 1, Groups E, F, G CSA/FM Class III T4	G
General Purpose (CSA, FM)	H
General Purpose (CSA, FM, CE, RCM)	J
Enclosure and Lid	
Aluminum epoxy coated	
2 x ½" NPT via adapter - cable inlet, IP65	A
2 x M20 x 1.5 cable inlet, IP65	B
2 x ½" NPT via adapter - cable inlet, IP68	C
2 x M20 x 1.5 cable inlet, IP68	D
Active shield length	
Standard length - (125 mm threaded, 105 mm flanged)	0
Extended shield - (250 mm threaded, 230 mm flanged)[2]	1
Extended shield - (400 mm threaded, 380 mm flanged)[3]	2

[1] Barrier or Intrinsically Safe power supply required for Intrinsically Safe protection.

[2] Available with Probe version options B ... D, F, G only [≥ 500 mm (19.69 inch)].

[3] Available with Probe version options C, D, and G only [≥ 750 mm (29.53 inch)].

© Siemens 2020

Selection and ordering data

	Order code
Further designs	
Please add "**-Z**" to Article No. and specify Order code(s).	
Total insertion length: enter the total insertion length in plain text description	**Y01**
Stainless steel tag [70 x 13 mm (2.75 x 0.5 inch)]: Measuring-point number/identification (max. 27 characters) specify in plain text	**Y15**
Manufacturer's test certificate: M to DIN 55350, Part 18 and to ISO 9000	**C11**
Material Inspection Certificate Type 3.1 per EN 10204	**C12**
INMETRO[1)]	**E34**
Operating Instructions	
All literature is available to download for free, in a range of languages, at	

http://www.siemens.com/processinstrumentation/documentation.

Accessories	**See page 4/69**

[1)] Available only with Approvals options B and D.

	Article No.
Accessories	
One metallic cable gland M20 x 1.5, -40 ... +80 °C (-40 ... +176 °F) with integrated shield connection (available for PROFIBUS PA)	**7ML1930-1AQ**
General Purpose	
½" NPT General Purpose Cable Entry IP68/IP69K NEMA 6, -40 ... +80 °C (-40 ... +176 °F), Dust Ignition Proof, cable size 6 ... 12 mm (0.236 ... 0.472 inch)	**7ML1830-1JA**
M20 x 1.5 General Purpose Cable Entry IP68/IP69K NEMA 6, -40 ... +80 °C (-40 ... +176 °F), Dust Ignition Proof, cable size 7 ... 12 mm (0.275 ... 0.472 inch)	**7ML1830-1JC**
Hazardous Locations	
½" NPT EMC rated Cable Gland: Dust Ignition Proof, Flameproof Exd, and Increased Safety ATEX II 2 GD ExtD A21 (Zone 1, Zone 2, Zone 21, Zone 22, and in Gas Groups IIA, IIB and IIC) -60 ... +80 °C IP66, IP67, IP68, NEMA4X, cable sizes 5.5 ... 12 mm (0.216 ... 0.472 inch)	**7ML1830-1JB**
M20 EMC rated Cable Gland: Dust Ignition Proof, Flameproof Exd, and Increased Safety ATEX II 2 GD ExtD A21 (Zone 1, Zone 2, Zone 21, Zone 22, and in Gas Groups IIA, IIB and IIC) -60 ... +80 °C IP66, IP67, IP68, NEMA4X, cable sizes 5.5 ... 12 mm (0.216 ... 0.472 inch)	**7ML1830-1JD**

Blind threaded flanges are available.
Customers interested in a custom designed device should consult a local sales person. For more information, please visit

http://www.automation.siemens.com/aspa_app.

© Siemens 2020

Selection and ordering data

	Article No.
Pointek Specials[1]	
CLS100 Polycarbonate Lid and Gasket, FKM	
Kit, lid and gasket, CLS100 enclosure version	**A5E01163671**
CLS100 Miscellaneous Parts	
Custom length of cable is available only for 7ML5501-xxx1x and 7ML5501-xxx5x[2]	
CLS200 Gasket (IP65), Synprene	
Spare gasket, enclosure version (IP65 versions only)	**A5E01163672**
CLS200 Gasket (IP68), Silicone	
Spare gasket, enclosure version (IP68 versions)	**A5E01163673**
CLS200/CLS300/LC300 Blind Lid	
Spare aluminum blind lid (for standard versions only)	**A5E01163674**
CLS200/CLS300 Lid with window	
Spare aluminum lid with window	**A5E01163676**
CLS200 Sensor Kit for cable units	
Kit, sensor for cable units, PPS, standard, FKM	**A5E01163677**
Kit, sensor for cable units, PPS, digital, FKM	**A5E01163678**
Kit, sensor for cable units, PPS, standard, FFKM	**A5E01163679**
Kit, sensor for cable units, PPS, digital, FFKM	**A5E01163680**
Kit, sensor for cable units, PVDF, standard, FKM	**A5E01163681**
Kit, sensor for cable units, PVDF, digital, FKM	**A5E01163682**
Kit, sensor for cable units, PVDF, standard, FFKM	**A5E01163683**
Kit, sensor for cable units, PVDF, digital, FFKM	**A5E01163684**
CLS200 Mounting Bracket, 316L stainless steel	
Spare mounting bracket, mounting hole 27 mm (1 inch)	**A5E01163685**
CLS200 PROFIBUS Connector (IP65)	
Spare, PROFIBUS connector (IP65 versions only)	**A5E01163686**
CLS200 Miscellaneous Parts	
CLS200 with FFKM O-rings (any version)[2]	
CLS200 Electronics	
Test magnet, digital version	**7ML1830-1JE**
Amplifier/power supply kit, standard version	**A5E03251681**
Amplifier/power supply, digital version	**7ML1830-1JF**
LCD display, digital version	**7ML1830-1JK**
CLS300 Cable Extensions, 316L stainless steel	
Kit, stainless steel cable extension, 1 m, adjustable by customer	**A5E01163688**
Kit, stainless steel cable extension, 3 m, adjustable by customer	**A5E01163689**
Kit, stainless steel cable extension, 5 m, adjustable by customer	**A5E01163690**
Kit, stainless steel cable extension, 10 m, adjustable by customer	**A5E01163691**
Kit, stainless steel cable extension, 15 m, adjustable by customer	**A5E01163693**
Kit, stainless steel cable extension, 20 m, adjustable by customer	**A5E01163695**
CLS300 Cable Extensions, 316 stainless steel with PFA coating	
Kit, PFA cable extension, 1 m, adjustable by customer	**A5E01163697**
Kit, PFA cable extension, 3 m, adjustable by customer	**A5E01163698**
Kit, PFA cable extension, 5 m, adjustable by customer	**A5E01163699**

	Article No.
Pointek Specials[1]	
Kit, PFA cable extension, 10 m, adjustable by customer	**A5E01163700**
Kit, PFA cable extension, 15 m, adjustable by customer	**A5E01163701**
Kit, PFA cable extension, 20 m, adjustable by customer	**A5E01163702**
CLS300 Rod Kits, 316L stainless steel	
Kit, stainless steel rod 180 mm (7.09 inch) to be used with CLS300 units only (with standard active shield). Insertion length after installation is 350 mm (13.78 inch).	**A5E01163719**
Kit, stainless steel rod 330 mm (12.99 inch) to be used with CLS300 units only (with standard active shield). Insertion length after installation is 500 mm (19.69 inch).	**A5E01163720**
Kit, stainless steel rod 580 mm (22.83 inch) to be used with CLS300 units only (with standard active shield). Insertion length after installation is 750 mm (29.53 inch).	**A5E01163721**
Kit, stainless steel rod 830 mm (32.68 inch) to be used with CLS300 units only (with standard active shield). Insertion length after installation is 1 000 mm (39.37 inch).	**A5E01163722**
Kit, stainless steel rod 1330 mm (52.36 inch) to be used with CLS300 units only (with standard active shield). Insertion length after installation is 1 500 mm (59.06 inch).[2]	
Kit, stainless steel rod 1830 mm (72.05 inch) to be used with CLS300 units only (with standard active shield). Insertion length after installation is 2 000 mm (78.74 inch).[2]	
Kit, stainless steel rod customized length up to 1 m[2]	
Kit, stainless steel rod customized length up to 2 m[2]	
CLS300 Electronics Kits with drivers (for rod or cable versions)	
Kit, electronics with driver, standard CLS300. To be used in cable versions with length greater than 5 m.[3][4]	**A5E01163723**
Kit, electronics with driver, digital CLS300. To be used in cable versions with length greater than 5 m.[3][4]	**A5E01163725**
CLS300 Electronics Kits with drivers (for cable versions)	
Kit, electronics with driver, standard CLS300. To be used in cable versions with length greater than 5 m.[3][4]	**A5E01163724**
Kit, electronics with driver, digital CLS300. To be used in cable versions with length greater than 5 m.[3][4]	**A5E01163726**
CLS300 Electronics	
Test magnet, digital version	**7ML1830-1JE**
Amplifier/power supply kit, standard version	**A5E03251683**
Amplifier/power supply, digital version	**7ML1830-1JF**
LCD display, digital version	**7ML1830-1JK**
CLS300 Weight Kit, 316L stainless steel	
Kit, spare stainless steel weight. To be used in any cable version of CLS300.	**A5E01163727**

1) Special flange sizes and facings are available. Please consult a local sales person for details.
2) Please consult a local sales person for part number and pricing
3) For General Purpose approvals only
4) To maintain approvals, qualified trained Siemens personnel required for part replacement
5) Customers interested in a custom designed device should consult a local sales person. For more information, please visit http://www.automation.siemens.com/aspa_app.

© Siemens 2020

Characteristic curves

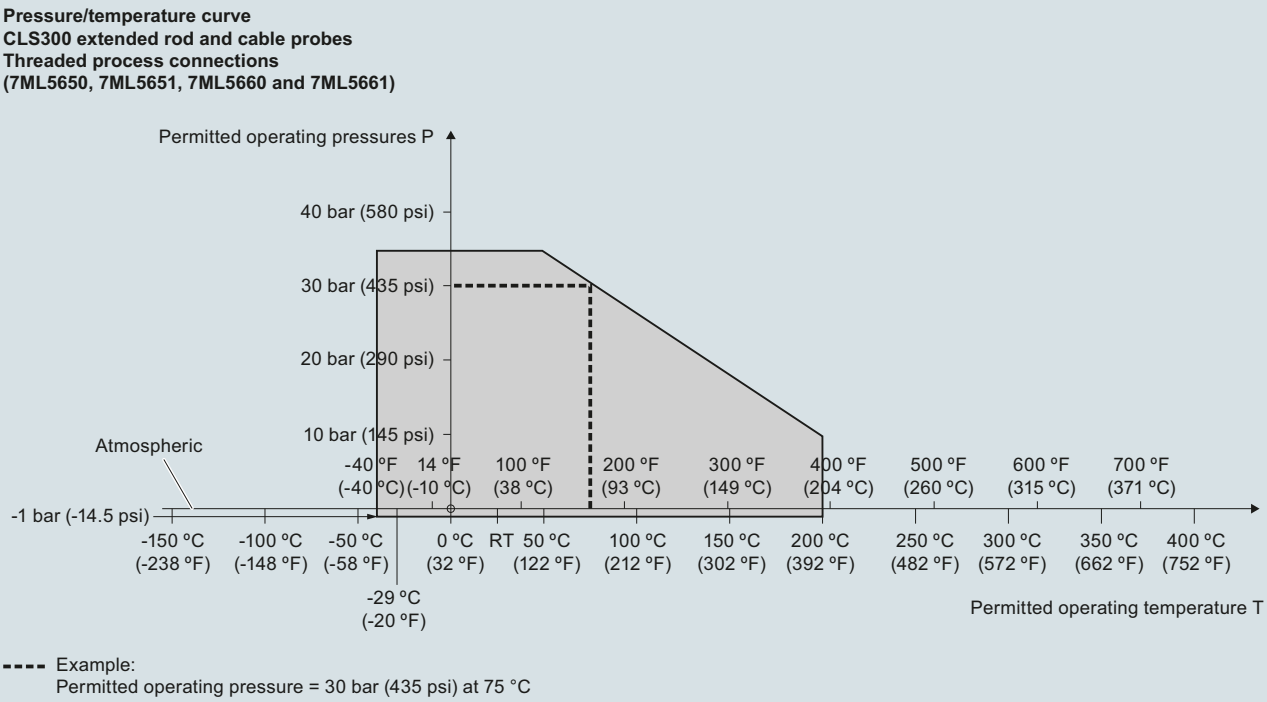

Pointek CLS300 process pressure/temperature derating curves (7ML5650, 7ML5651, 7ML5660 and 7ML5661)

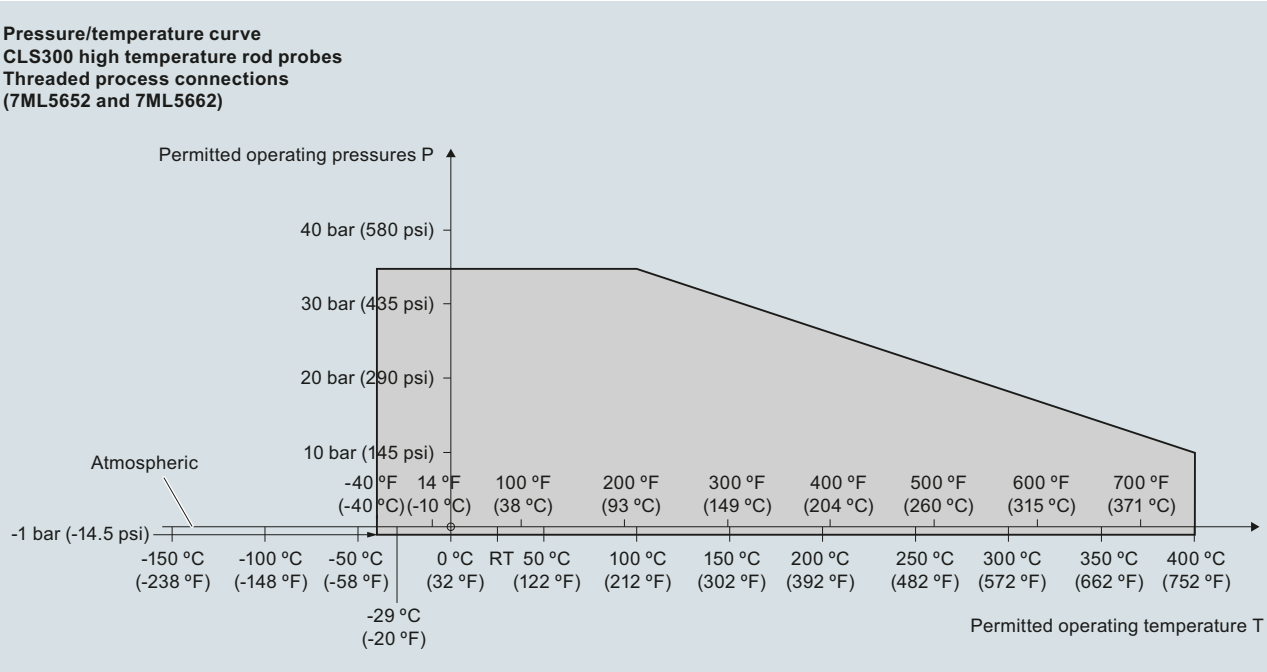

Pointek CLS300 process pressure/temperature derating curves (7ML5652 and 7ML5662)

© Siemens 2020

Characteristic curves (continued)

Pressure/temperature curve
CLS300 extended rod and cable probes
ASME flanged process connections
(7ML5650, 7ML5651, 7ML5660 and 7ML5661)

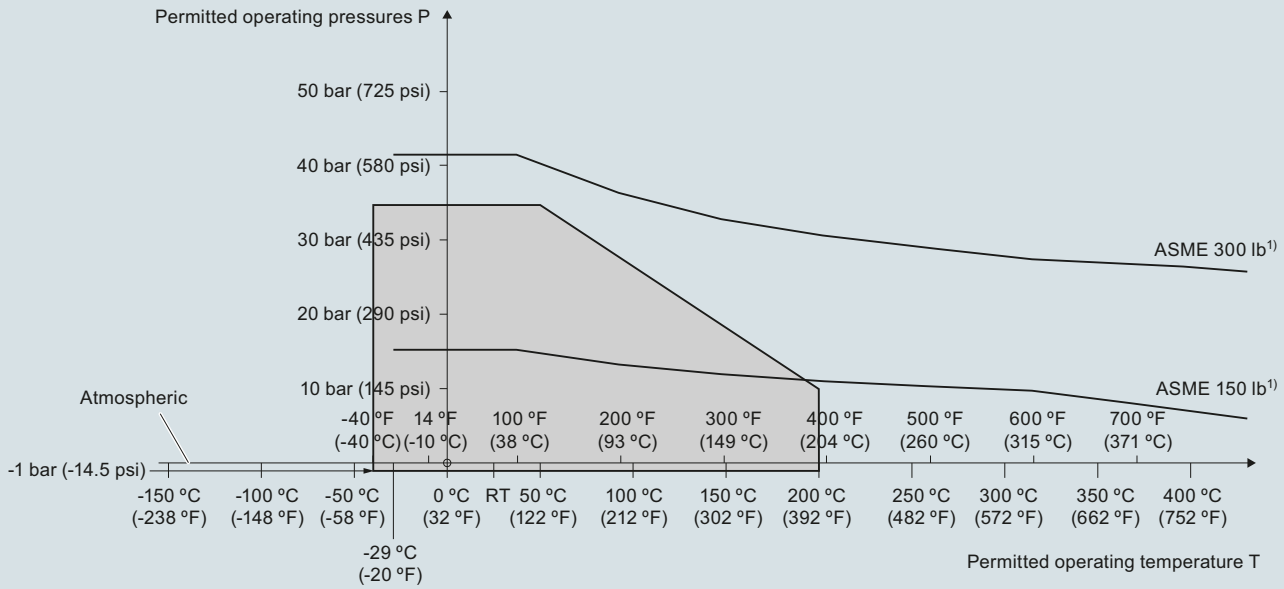

1) The curve denotes the minimum allowable flange class for the shaded area below.

Pointek CLS300 process pressure/temperature derating curves (7ML5650, 7ML5651, 7ML5660, and 7ML5661)

© Siemens 2020

Characteristic curves (continued)

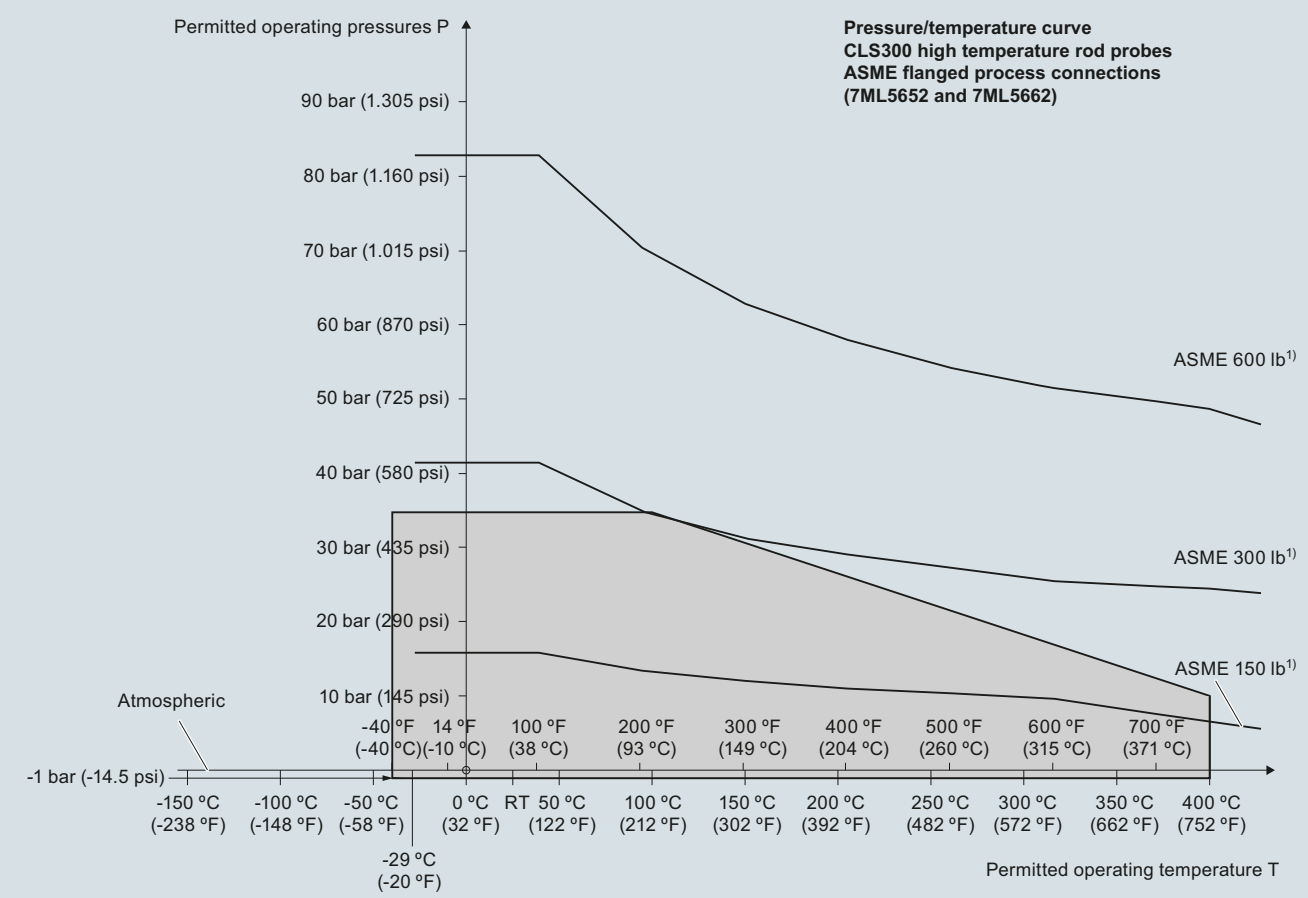

1) The curve denotes the minimum allowable flange class for the shaded area below.

Pointek CLS300 process pressure/temperature derating curves (7ML5652 and 7ML5662)

© Siemens 2020

Characteristic curves (continued)

Pressure/temperature curve
CLS300 extended rod and cable probes
EN flanged process connections
(7ML5650, 7ML5651, 7ML5660 and 7ML5661)

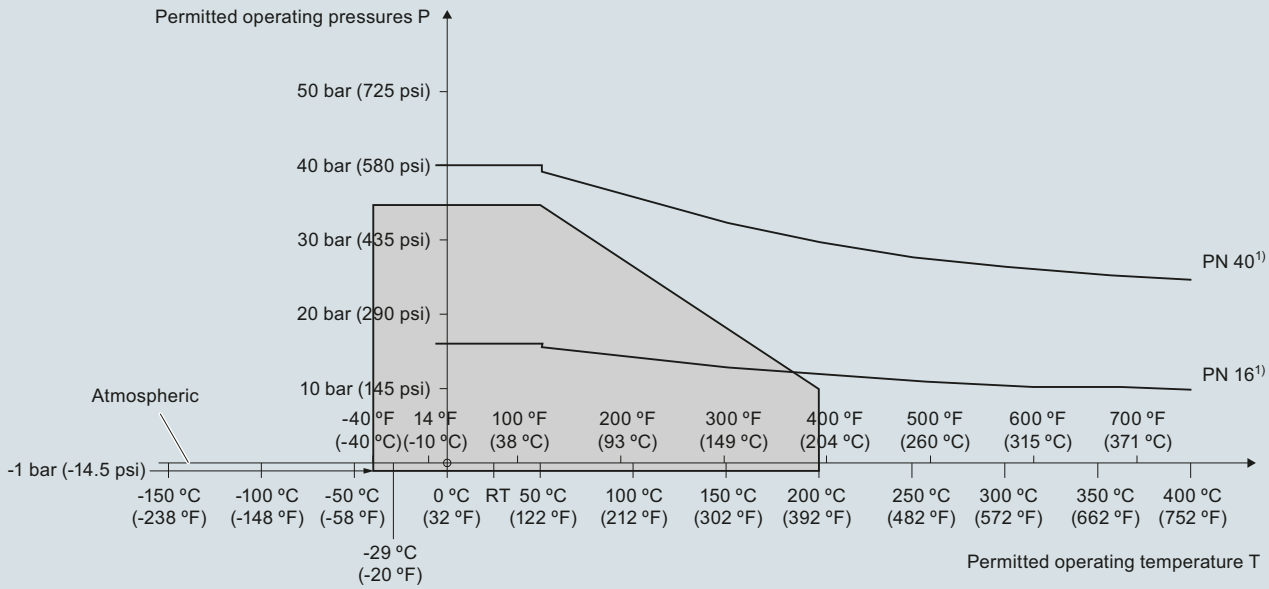

[1)] The curve denotes the minimum allowable flange class for the shaded area below.

Pointek CLS300 process pressure/temperature derating curves (7ML5650, 7ML5651, 7ML5660 and 7ML5661)

Pressure/Temperature Curve
CLS300 High Temperature Rod Probes
EN Flanged Process Connections (7ML5652 and 7ML5662)

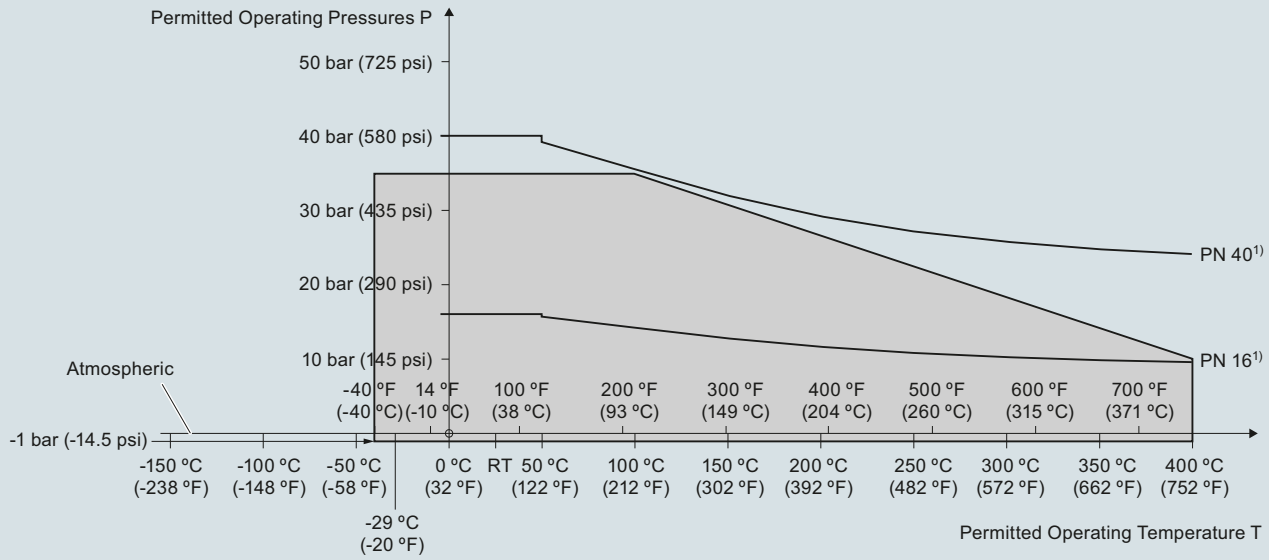

[1)] The curve denotes the minimum allowable flange class for the shaded area below.

Pointek CLS300 process pressure/temperature derating curves (7ML5652 and 7ML5662)

© Siemens 2020

Dimensional drawings

Rod version
Threaded (7ML5650 and 7ML5660)

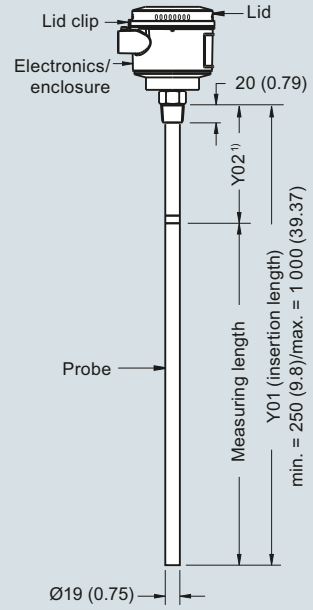

High temperature rod version
Threaded (7ML5652 and 7ML5662)

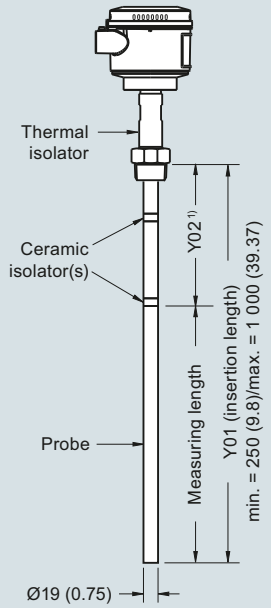

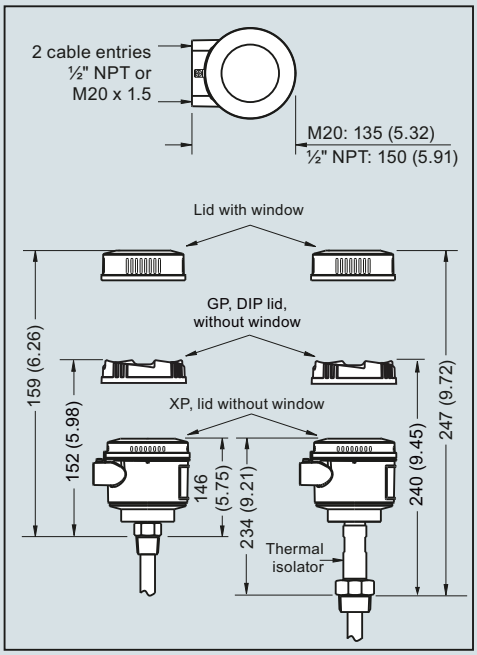

Cable version, non-insulated
Threaded (7ML5651 and 7ML5661)

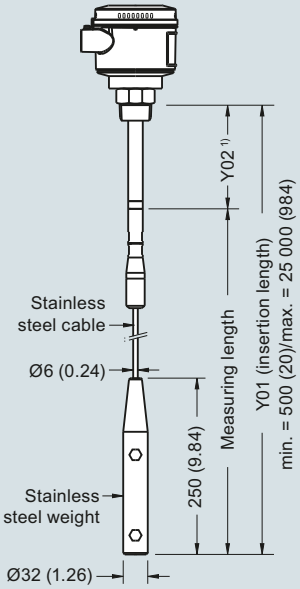

Cable version, insulated
Threaded (7ML5651 and 7ML5661)

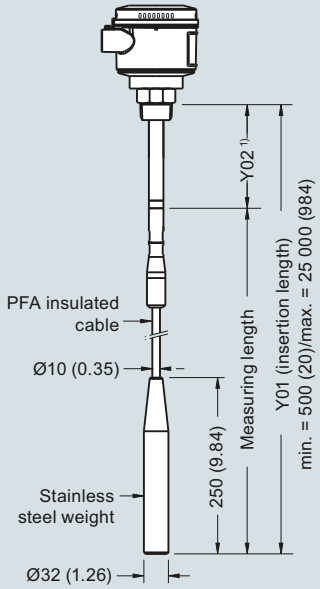

Note:

1) Extended Active Shield (Y02): standard length 125 (4.92). Optional active shield lengths: 250 (9.84) or 400 (15.75).

Pointek CLS300 threaded process connections, dimensions in mm (inch)

© Siemens 2020

Dimensional drawings (continued)

Rod version
Welded flange (7ML5650 and 7ML5660)

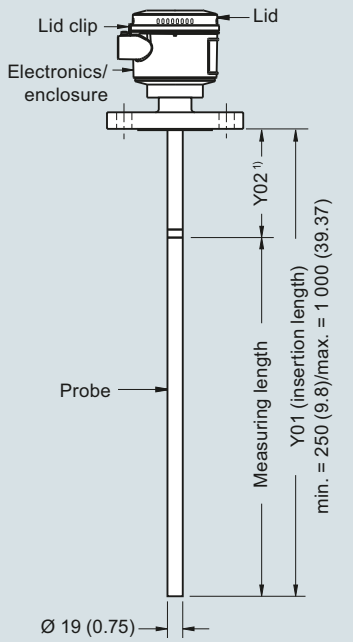

High temperature rod version
Welded flange
(7ML5652 and 7ML5662)

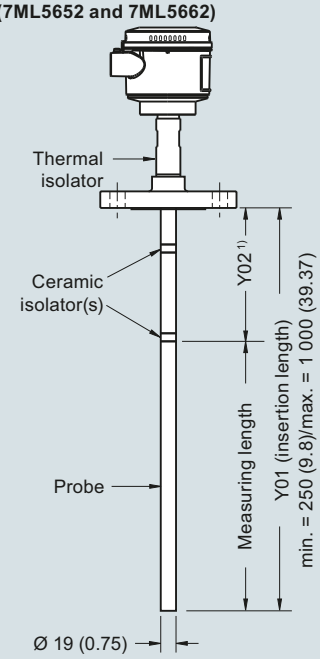

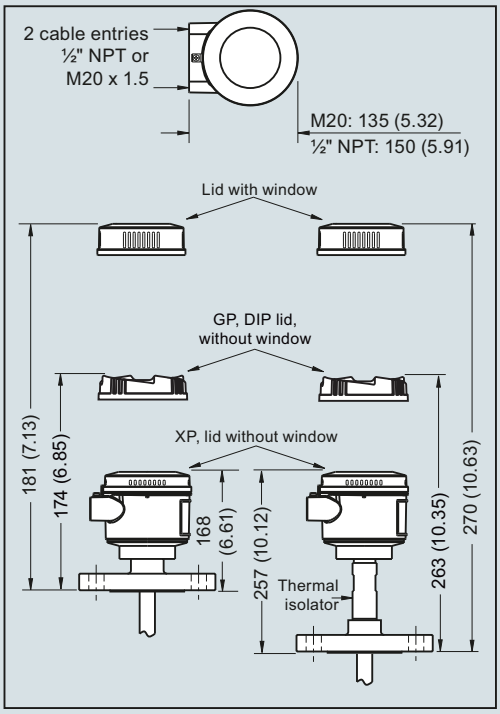

Cable version, non-insulated
Welded flange (7ML5651 and 7ML5661)

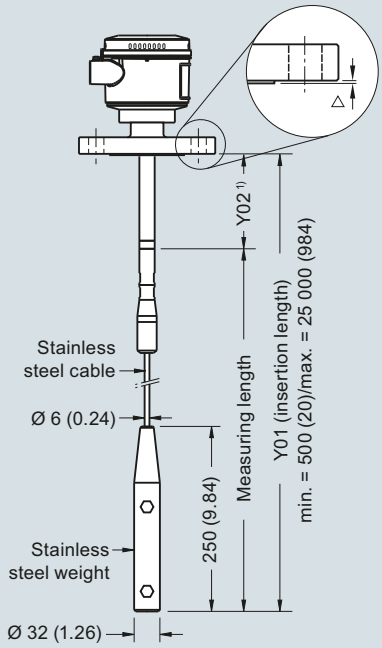

Cable version, insulated
Welded flange (7ML5651 and 7ML5661)

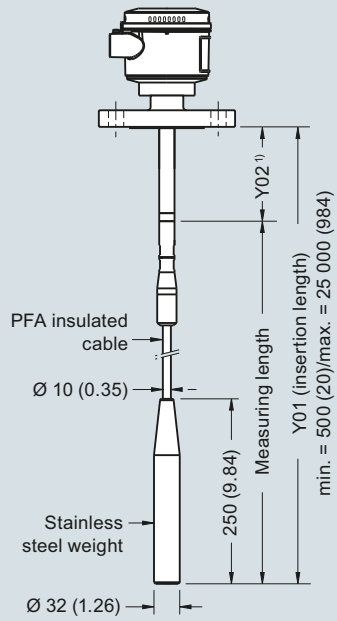

Flange Facing (raised face)	
Flange Class	**Facing thickness**
△ ASME 150/300	2 (0.08)
△ ASME 600/900	7 (0.28)
△ PN16/40	2 (0.08)

Note:

1) Extended Active Shield (Y02): standard length 105 (4.13). Optional active shield lengths: 230 (9.06) or 380 (14.96).
Insertion length does not include any raised face/gasket face dimension (see Flange Facing Table above)

Pointek CLS300 flanged process connections, dimensions in mm (inch)

© Siemens 2020

Circuit diagrams

Wiring: Pointek CLS300 standard

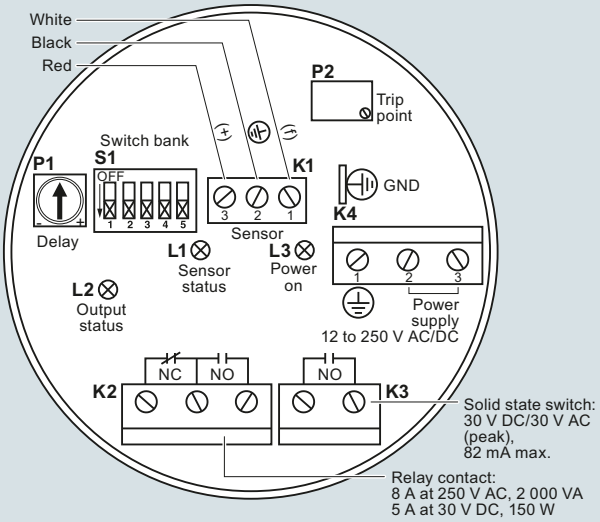

Notes:
- Identification label is on underside of lid. Switch and potentiometer settings are for illustration purposes only (refer to operation/setup in manual).
- All field wiring must have insulation suitable for at least 250 V.
- Relay contact terminals are for use with equipment having no accessible live parts and wiring having insulation suitable for at least 250 V.
- Maximum working voltage between adjacent relay contacts shall be 250 V.
- Refer to the Instruction manual or contact Siemens representative for detailed wiring information.

Wiring: Pointek CLS300 digital

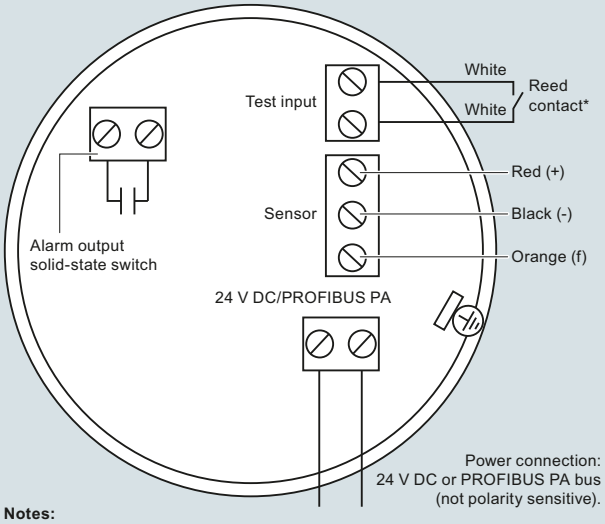

Notes:
Refer to the instruction manual or contact a Siemens representative for detailed wiring information.

***Magnet activated sensor test**
A magnet can be used to test the sensor without opening the lid of the Pointek CLS300 digital version. Bring the magnet close to the test area indicated on the enclosure. The sensor test starts and finishes automatically after 10 seconds.

Pointek CLS300 connections

© Siemens 2020

Overview

SITRANS LVL100 is a compact vibrating level switch for material detection in liquid and slurry applications such as overflow, high, low and demand applications, as well as pump protection. It is ideal for use in confined spaces.

Benefits

- Proven vibrating level switch technology for liquids
- Compact insertion length of 40 mm (1.57 inch) for confined space applications
- Available starting at 1/2" threaded process connections
- Fault monitoring for corrosion, loss of vibration, or line break to the piezo drive
- Integrated test function to confirm correct operation

Application

SITRANS LVL100 is a compact level switch designed for industrial use in all areas of process technology and can be used for material detection with liquids and slurries. With an insertion length of only 40 mm (1.57 inch), SITRANS LVL100 can be mounted in small pipes and confined space applications. It is virtually unaffected by the chemical and physical properties of the liquid. The LVL100 can be used in difficult conditions including turbulence, air bubbles, foam generation, buildup, or external vibration.

The tuning fork is piezoelectrically energized and vibrates at a mechanical resonance frequency of approximately 1 200 Hz. The vibration frequency changes when the tuning fork is covered by the medium. This change is detected by the integrated oscillator and converted into a switching command. The integrated electronics evaluate the level signal and output a switching signal to connected devices.

- Key Applications: for use in liquids and slurries, for level measurement, overfill, and dry run protection

Configuration

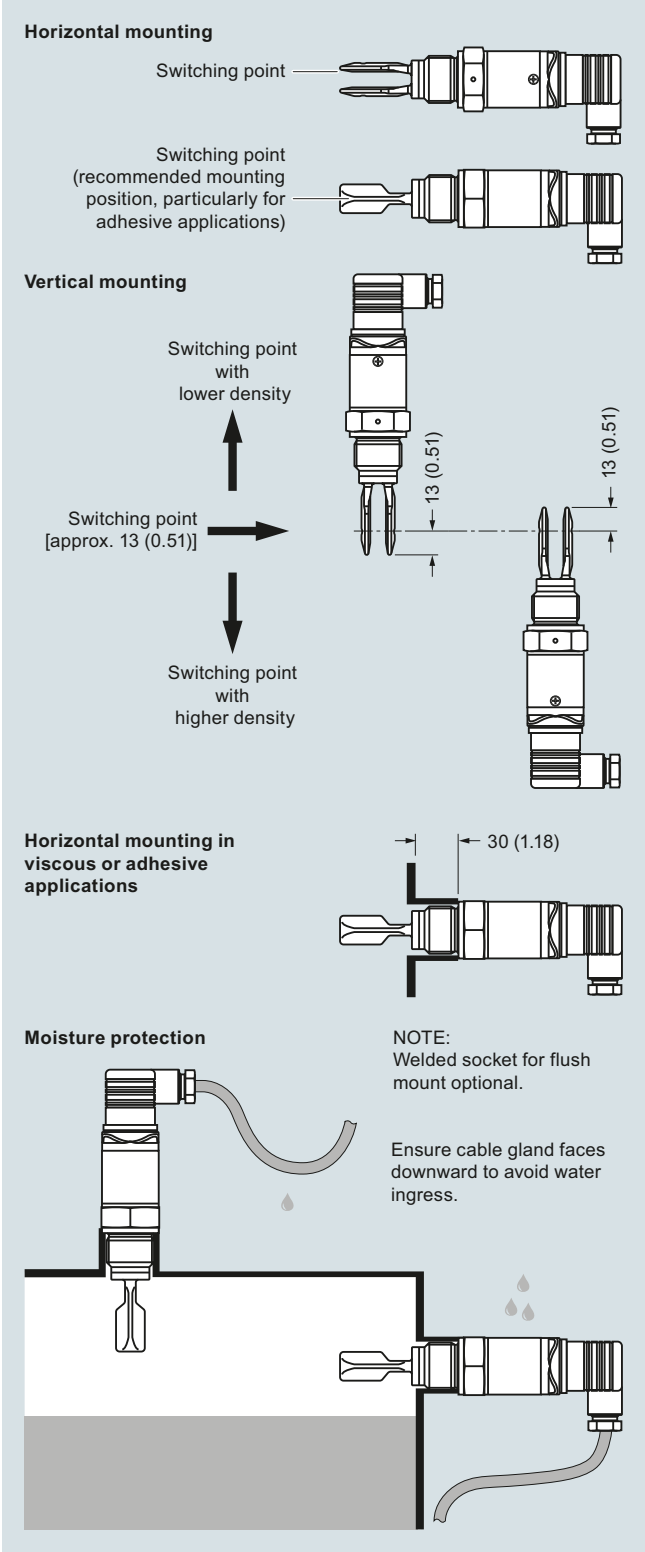

SITRANS LVL100 installation, dimensions in mm (inch)

© Siemens 2020

Technical specifications

Mode of operation	
Measuring principle	Vibrating point level switch
Input	
Measured variable	High and low and demand
Output	
Output options	• Contactless electronic switch • Transistor output PNP
Measuring accuracy	
Hysteresis	Approx. 2 mm (0.08 inch) with vertical installation
Switching delay	Approx. 500 ms (on/off)
Frequency	Approx. 1 100 Hz
Rated operating conditions	
Installation conditions	
• Location	Indoor/outdoor
Ambient conditions	
• Ambient temperature	-40 ... +70 °C (-40 ... +158 °F)
• Storage temperature	-40 … +80 °C (-40 … +176 °F)
• Installation category	III
• Pollution degree	2
Medium conditions	
• Temperature	
- Standard	-40 ... +100 °C (-40 ... +212 °F)
- High temperature option	-40 ... +150 °C (-40 ... +302 °F)
• Pressure (vessel)	-1 ... 64 bar g (-14.5 ... 928 psi g)
• Density	0.7 ... 2.5 g/cm³ (0.025 ... 0.09 lb/in³)
Design	
Material	
• Enclosure	316L and Plastic PEI
• Tuning fork	316L (1.4404 or 1.4435)
• Process connection (threaded)	316L (1.4404 or 1.4435)
• Process seal	Klingersil C-4400
Process connection	
• Pipe thread, cylindrical (ISO 228 T1)	G ½" A, G ¾" A, or G 1" A
• Pipe thread, tapered	½" NPT, ¾" NPT, or 1" NPT
• Hygienic fittings	Bolting DN 40 PN 40
	Tri-clamp 1", 1½", 2" PN 10
Degree of protection	IP65/Type 4/NEMA 4 (with DIN 43650 valve plug), IP66/67 or IP68 (with M12 connector)
Conduit entry	1 x M12 [IP66/IP67 or IP68 (0.2 bar)]
Weight (housing)	250 g (9 oz)
Power supply	
Supply voltage	20 ... 253 V AC, 50/60 Hz 20 ... 253 V DC
Power consumption	Max. 0.5 W
Certificates and approvals	• Overfill protection (WHG) • Shipping approvals

© Siemens 2020

Selection and ordering data

	Article No.
SITRANS LVL100 Vibrating point level switch. ↗	**7ML5745-**
Detects level and material in liquids and slurries. Compact, with 40 mm (1.6 inch) insertion.	■ ■ ■ ■ ■ - ■ ■ **A 0**
↗ Click on the Article No. for the online configuration in the PIA Life Cycle Portal.	
Approvals	
Without approvals	**1**
Shipping approvals[5]	**2**
Overfill protection (WHG)[1]	**3**
Canada/US for Ex-free area (including Ordinary Location Approval)[7]	**4**
Process temperature	
Standard -40 ... +100 °C (-40 ... +212 °F)[2]	**A**
Extended -40 ... +150 °C (-40 ... +302 °F)[2][6]	**B**
Hygienic applications -40 ... +150 °C (-40 ... +302 °F)[3]	**C**
Process connection	
Thread G¾" A PN 64/316L	**A 0**
Thread G¾" A PN 64/316L Ra < 0.8 µm	**A 1**
Thread ¾" NPT PN 64/316L	**A 2**
Thread ¾" NPT PN 64/316L Ra < 0.8 µm	**A 3**
Thread G1" A PN 64/316L	**A 4**
Thread G1" A PN 64/316L Ra < 0.8 µm	**A 5**
Thread 1" NPT PN 64/316L	**A 6**
Thread 1" NPT PN 64/316L Ra < 0.8 µm	**A 7**
Tri-Clamp 1" PN 16 DIN 32676/316L Ra < 0.8 µm	**A 8**
Tri-Clamp 1½" PN 16 DIN 32676/316L Ra < 0.8 µm	**B 0**
Tri-Clamp 2" PN 16 DIN 32676/316L Ra < 0.8 µm	**B 1**
Bolting DN 25 PN 40 DIN 11851/316L Ra < 0.8 µm	**B 2**
Bolting DN 40 PN 40 DIN 11851/316L Ra < 0.8 µm	**B 3**
Bolting DN 50 PN 25 DIN 11851/316L Ra < 0.8 µm	**B 4**
SMS DN 38 PN 6 316L Ra < 0.8 µm	**B 5**
Hygienic fitting with compression nut F40 PN 25/316L Ra < 0.8 µm	**B 6**
Thread G½" (DIN 3852-A) PN 64/316L	**C 0**
Thread G½" (DIN 3852-A) PN 64/316L Ra < 0.8 µm	**C 1**
Thread ½" NPT (ASME B1.20.1) PN 64/316L	**C 2**
Thread ½" NPT (ASME B1.20.1) PN 64/316L Ra < 0.8 µm	**C 3**
Thread R¾" PN 64, EN 10226-1/316L	**D 0**
R1 Thread R1 PN 64, EN 10226-1/316L	**D 1**
RF Thread R1 PN 64, EN 10226-1/316L (Ra < 0.8 µm)	**D 2**
Electronics	
Contactless electronic switch 20 ... 250 V AC/DC[4]	**1**
Transistor output PNP 10 ... 35 V DC	**2**
Housing	
316L	**1**
Electrical connection/Protection	
M12 x 1/IP67	**A**
According to ISO4400 including plug/IP65	**B**
According to DIN 43650 incl. plug with QuickOn connection/IP65	**C**
M12 x 1 incl. 5 m cable/IP68 (0.2 bar)	**D**

[1] Available only with Electronics option 2.
[2] Available only with Process connection options A0, A2, A4, A6, C0, C2, D0, and D1.
[3] Available only with Process connection options A1, A3, A5, and A7 ... B6, C1, C3, and D2.
[4] Available only with Electrical connection/Protection options B and C.
[5] Available only with Process temperature options A and B.
[6] Available only with Shipping approval options DNV and GL.
[7] Available only with Electrical connection/Protection option B.

	Order code
Further designs	
Please add "**-Z**" to Article No. and specify Order code(s).	
Cleaning including certificate (oil, grease and silicone free)	**W01**
Identification Label, foil laser marking	**Y16**
Acceptance test Certificate 2.2 for material EN 10204	**C15**
3.1-Inspection Certificate for instrument with test data (EN 10204)	**C25**
Operating Instructions	
All literature is available to download for free, in a range of languages, at	
http://www.siemens.com/processinstrumentation/documentation.	
Spare Parts	Article No.
LVL100 Threaded Welded Socket	
G¾" A/316L with FKM Seal	**7ML1930-1EE**
G1" A/316L with FKM Seal	**7ML1930-1EF**
M27 x 1.5/316L with FKM Seal	**7ML1930-1EG**
G¾" A/316L with EPDM Seal	**7ML1930-1EH**
G1" A/316L with EPDM Seal	**7ML1930-1EJ**
M27 x 1.5/316L with EPDM Seal	**7ML1930-1EK**

© Siemens 2020

Characteristic curves

Ambient temperature to process temperature dependency (standard version)

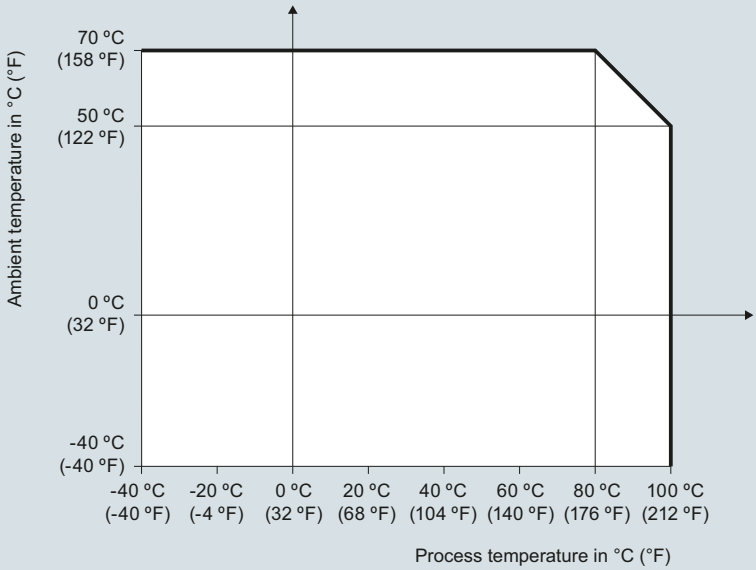

Ambient temperature to process temperature dependency (high temperature version)

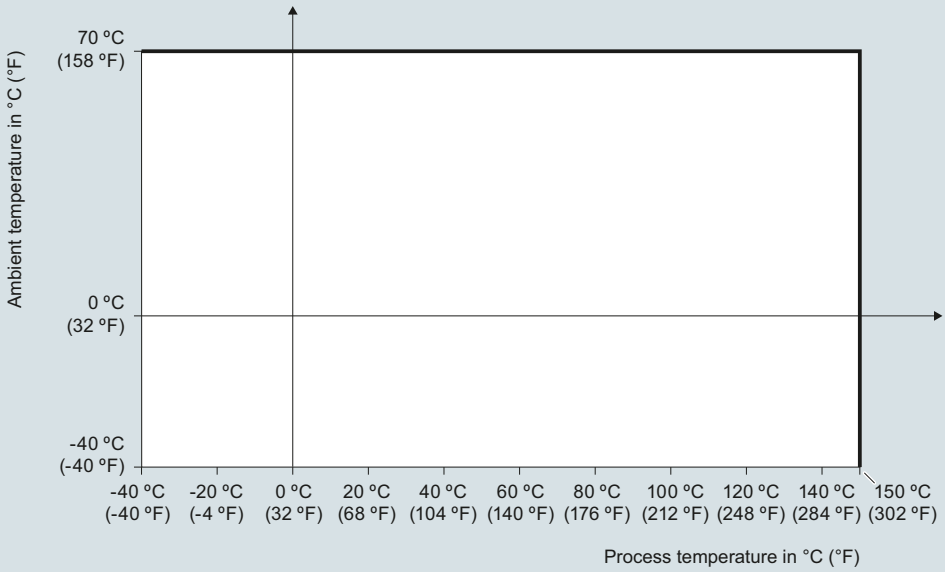

SITRANS LVL100 ambient temperature/process temperature derating curves

© Siemens 2020

Dimensional drawings

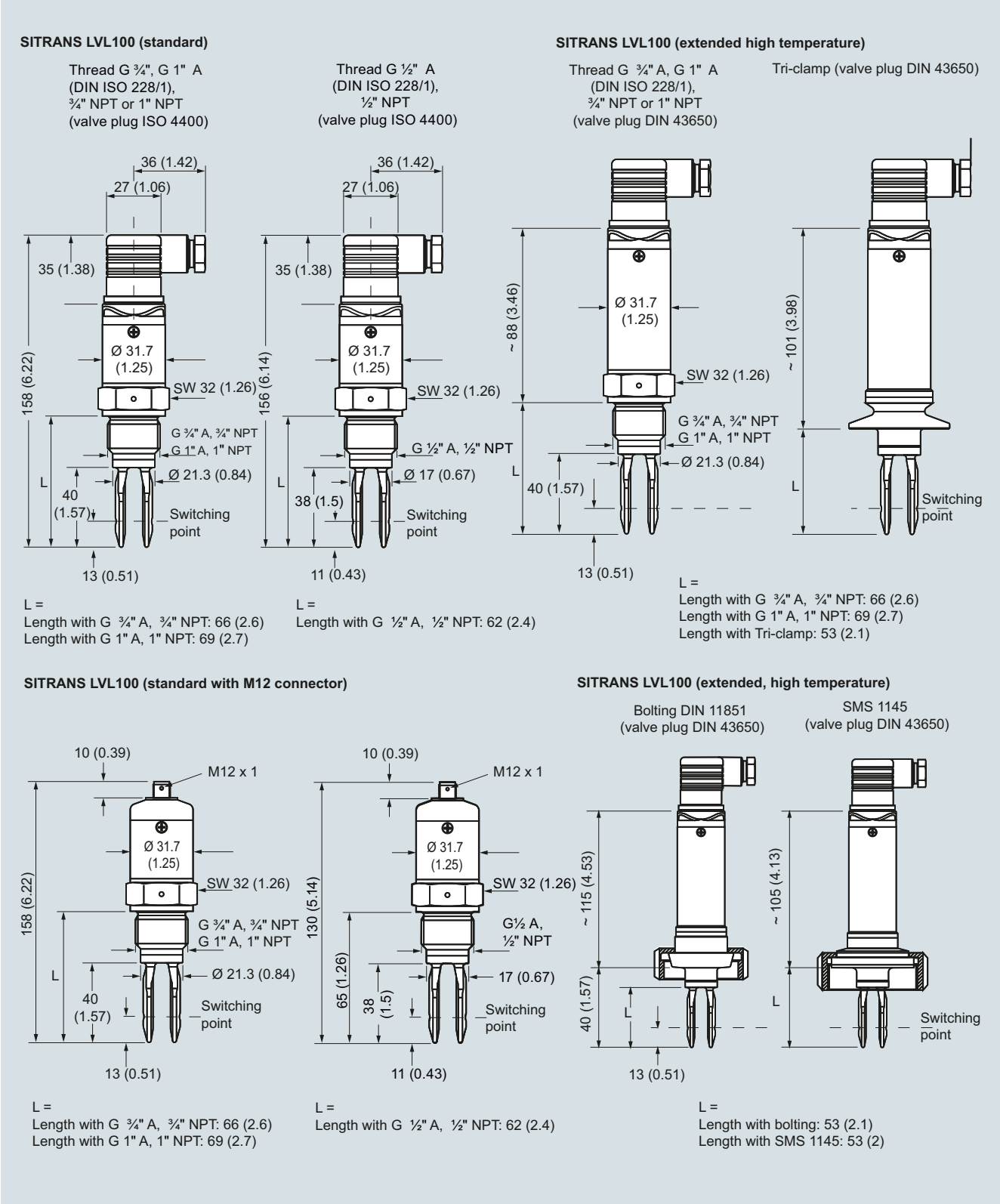

SITRANS LVL100, dimensions in mm (inch)

© Siemens 2020

Options

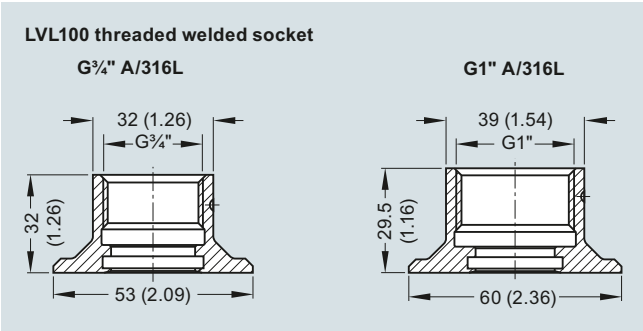

SITRANS LVL100 welded socket, dimensions in mm (inch)

© Siemens 2020

Circuit diagrams

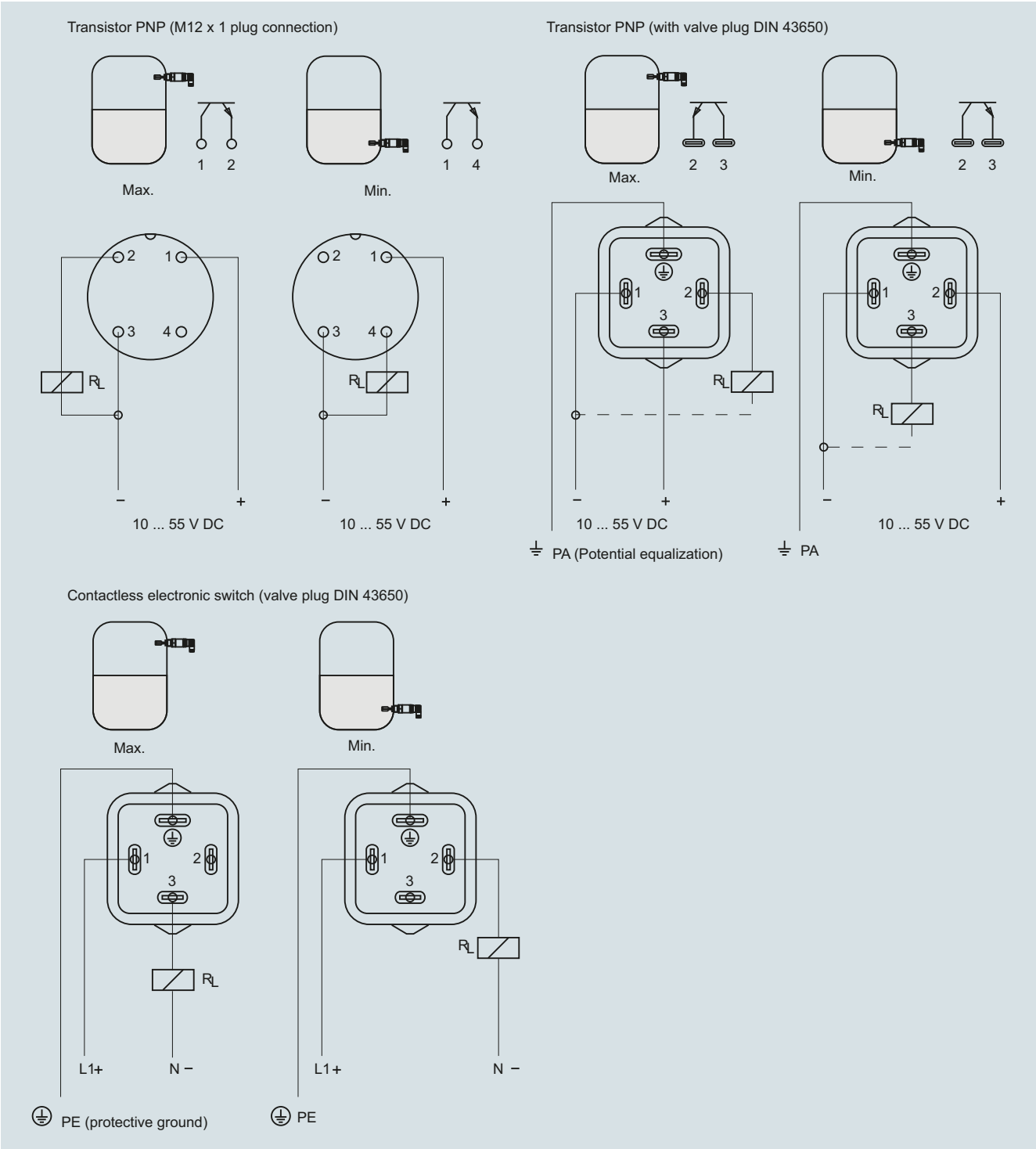

SITRANS LVL100 connections

© Siemens 2020

Overview

SITRANS LVL200 is a standard vibrating level switch for material detection in liquid and slurry applications such as overflow, high, low, and demand applications, as well as pump protection. For use in SIL-2 applications.

Benefits

- Proven vibrating level switch technology for liquids
- Compact insertion length of 40 mm (1.57 inch) for confined space applications
- Fault monitoring for corrosion, loss of vibration or line break to the piezo drive
- Functional Safety (SIL 2). Device suitable for use in accordance with IEC 61508 and IEC 61511
- Hygienic process connections
- Suitable for API 2350
- Optional remote test signal conditioner

Application

SITRANS LVL200 is a level switch designed for industrial use in all areas of process technology and can be used with liquids and slurries. With a tuning fork insertion length of only 40 mm (1.57 inch), SITRANS LVL200 can be mounted in small pipes and applications with confined space. The LVL200 can be used to measure products with a minimum density of > 0.5 g/cm³ (0.018 lb/in³). The LVL200 can be used in difficult conditions including turbulence, air bubbles, foam generation, buildup, or external vibration.

SITRANS LVL200 continuously monitors faults via frequency evaluation, providing early detection of strong corrosion or damage on the tuning fork, loss of vibration, or a line break to the piezo drive.

The tuning fork is piezoelectrically energized and vibrates at its mechanical resonance frequency of approximately 1 200 Hz. The vibration frequency changes when the tuning fork is covered by the medium. This change is detected by the integrated oscillator and converted into a switching command. The integrated electronics evaluate the level signal and output a switching signal, directly operating connected devices.

The optional signal conditioner provides a remote test feature to ensure continuous product reliability.

- Key Applications: for use in liquids and slurries, for level measurement, overfill, and dry run protection

Configuration

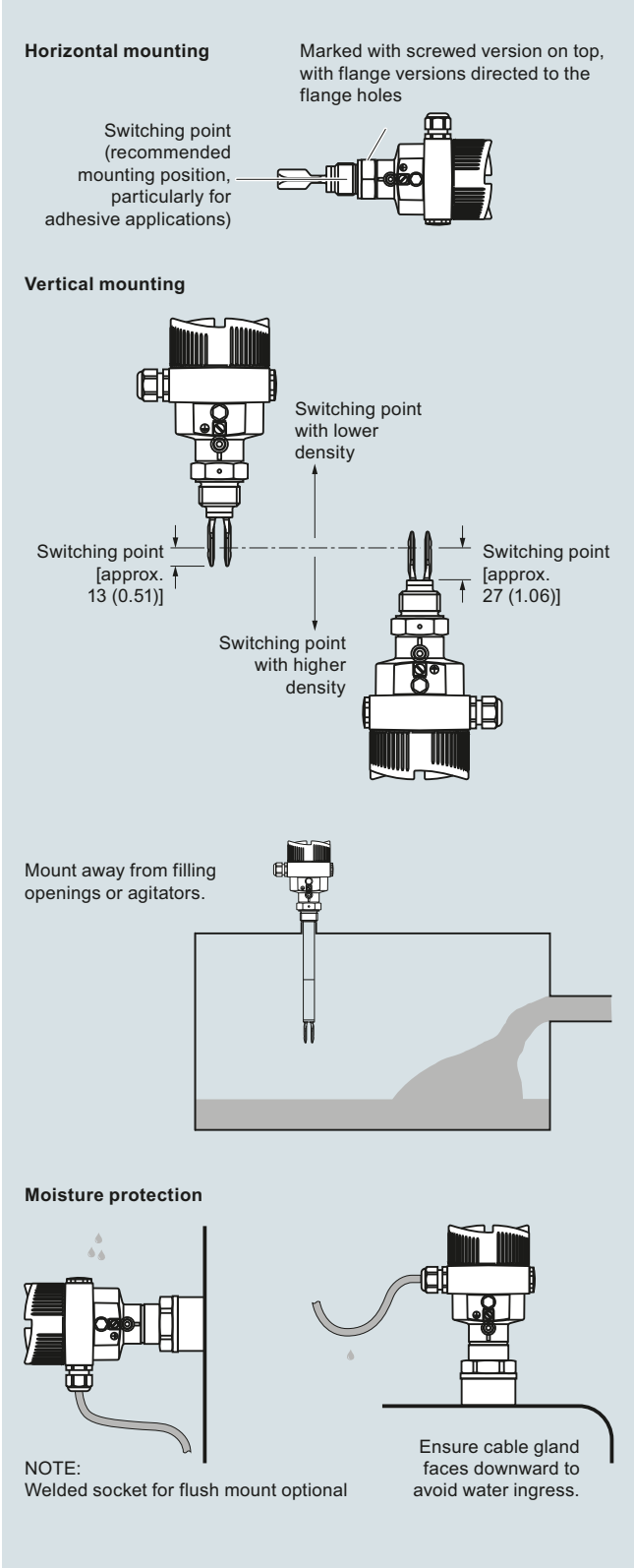

SITRANS LVL200 installation, dimensions in mm (inch)

© Siemens 2020

Technical specifications

Mode of operation	
Measuring principle	Vibrating point level switch
Input	
Measured variable	High and low and demand (via mode switch)
Output	
Output options	• Relay output (DPDT), 2 floating SPDTs • Contactless electronic switch • 2-wire Namur signal output • Transistor (NPN/PNP) 10 ... 55 V DC • 8/16 mA
Measuring accuracy	
Repeatability	0.1 mm (0.004 inch)
Hysteresis	Approx. 2 mm (0.08 inch) with vertical installation
Switching delay	• Standard, Extended: approx. 500 ms (on/off) • High temperature: approx. 1 s (optionally adjustable at factory)
Frequency	• Standard, Extended: Approx. 1 200 Hz • High temperature: 1400 Hz
Rated operating conditions	
Installation conditions	
• Location	Indoor/outdoor
Ambient conditions	
• Ambient temperature	-40 ... +70 °C (-40 ... +158 °F)
• Storage temperature	-40 … +80 °C (-40 … +176 °F)
• Installation category	III
• Pollution degree	2
Medium conditions	
• Temperature	
- LVL200S Standard	-50 ... +150 °C (-58 ... +302 °F)
- LVL200S High temperature option	-50 ... +250 °C (-58 ... +482 °F)
- LVL200E Standard: with 316L/ Alloy C22	-50 ... +150 °C (-58 ... +302 °F)
- LVL200E High temperature option with 316L/Alloy C22	-50 ... +250 °C (-58 ... +482 °F)
- LVL200H High temperature	-196 … +450 °C (-321 … +842 °F)
Pressure (vessel)	• Standard, Extended: -1 ... 64 bar g (-14.5 ... 928 psi g) • High temperature: instrument version up to 160 bar (2 320 psi g): -1 … 160 bar/-100 … 16 000 kPa (-14.5 … 2 320 psi g) Note: The process pressure is dependent on configuration, including process fitting, e.g. flange
Density	0.7 ... 2.5 g/cm³ (0.025 ... 0.09 lb/in³); 0.5 ... 2.5 g/cm³ (0.018 ... 0.09 lb/in³) by switching over Density optionally starts at 0.47 cm³ (0.017 lb/in³)

Design	
Material	
• Enclosure	• Aluminum die-cast AlSi10Mg, powder-coated, basis: Polyester • Stainless steel housing, electropolished 316L • Stainless steel housing, precision casting 316L • Plastic housing, plastic PBT (Polyester)
• Tuning fork	316L (1.4404 or 1.4435), Alloy C22
• Extension tube [ø 21.3 mm (0.839 inch)]	316L (1.4404 or 1.4435), Alloy C22
• Process connection: threaded	• Standard, Extended: 316L (1.4404 or 1.4435), Alloy C22 • High temperature: Inconel 718
• Process connection: flange	316L (1.4404 or 1.4435), 316L with Alloy C22, ECTFE, or PFA coating
• Process seal	Klingersil C-4400
Process connection	
• Pipe thread, cylindrical (ISO 228 T1)	G ¾" A, G 1" A
• Pipe thread, tapered	¾" NPT, 1" NPT, 1½" NPT
• Flanges	DIN from DN 25, ASME from 1"
• Hygienic fittings	Bolting DN 40 PN 40, 1, 1½, 2, 2½" Tri-Clamp PN 10, conus DN 25 PN 40, Tuchenhagen Varivent DN 50 PN 10, SMS
Degree of protection	Type 4X/NEMA 4X/IP66/IP67
Conduit entry	• 1 x M20 x 1.5 (cable: ø 5 ... 9 mm), 1 x blind stopper M20 x 1.5; attached 1 x M20 x 1.5 cable entry • 1 x ½" NPT cable entry, 1 x blind stopper ½" NPT, 1 x ½" NPT cable entry • 1x M12 x 1; 1 x blind stopper M20 x 1.5
Weight	
• Device weight (dependent on process fitting)	Approx. 0.8 ... 4 kg (0.18 ... 8.82 lb)
• Tube extension (extended version)	Approx. 920 g/m (10 oz/ft)
Power supply	
Supply voltage	
• Relay DPDT	20 ... 253 V AC, 50/60 Hz, 20 ... 72 V DC
• Contactless	20 ... 253 V AC, 50/60 Hz, 20 ... 253 V DC
• 2-wire NAMUR	
Operating voltage (characteristics according to standard) for connection to an amplifier according to NAMUR	IEC 60947-5-6, approx. 8.2 V Off-load voltage U_o approx. 8.2 V Short-circuit current I_U approx. 8.2 mA
Operating voltage 8/16 mA (via the signal conditioning instrument)	
• Non-Ex instrument	12 … 36 V DC
• Ex-d instrument (ATEX, FM, CSA)	12 … 36 V DC
• Ex-ia instrument (ATEX)	12 … 29 V DC
• Ex-ia instrument (FM, CSA)	12 … 31 V DC

© Siemens 2020

Technical specifications (continued)

Power consumption	• Standard, Extended: 1 ... 8 VA (AC), approx. 1.3 W (DC) • High temperature: 3 VA (AC), 1 W (DC)
• Relay DPDT	1 ... 8 VA (AC), approx. 1.3 W (DC)
• Contactless	Domestic current requirement approx. 3 mA (via load circuit) Load current • Min. 10 mA • Max. 400 mA [with I > 300 mA the ambient temperature can be max. 60 °C (140 °F)] • Max. 4 A up to 40 ms (not WHG specified)
• 8/16 mA, two-wire output	Output signal • Empty (uncovered) - 8 mA • Full (covered) - 16 mA • Fault message - < 1.8 mA Possible signal conditioning instruments: SITRANS SCSC, SITRANS TCSC
• 2-wire Namur	Current consumption • Falling characteristics ≥ 2.6 mA uncovered/≤ 0.6 mA covered • ≤ 0.6 mA uncovered/≥ 2.6 mA covered • Failure message ≤ 0.6 mA
• Transistor (NPN/PNP) 10 ... 55 V DC	Output • Floating transistor output, permanently shortcircuit-proof Load current • < 400 mA Voltage loss • < 1 V Switching voltage • < 55 V DC Blocking current • < 10 µA
Certificates and approvals	• CE, CSA • Overfill Protection WHG and VLAREM II • FM (Non-Incendive) Class I, Div. 2, Groups A, B, C, D • FM (Explosion-Proof) Class I, Div. 1, Groups A, B, C, D; (Dust Ignition-Proof) Class II, III, Div. 1, Groups E, F, G1 • IECEx d IIC T6 ... T2 Ga/Gb EHEDG • ATEX II 1/2G, 2G EEx d IIC T6 • ATEX II 1G, 1/2G, 2G EEx ia IIC T6 • Shipping approvals • BR-Ex d IIC T6 ... T2 • FDA, 3A, EHEDG • SIL/IEC61508 Declaration of Conformity [SIL-2 (min/max detection)] Please see configuration section below for full list of approvals.

© Siemens 2020

Selection and ordering data

	Article No.
SITRANS LVL200 Vibrating point level switch, standard design ↗	**7ML5746-** ■ ■ ■ ■ ■ - ■ ■ A 0 ■ ■ ■
Detects level and material in liquids and slurries. Short insertion. For hazardous applications.	
↗ Click on the Article No. for the online configuration in the PIA Life Cycle Portal.	
Electronics	
Contactless electronic switch 20 ... 250 V AC/DC[1)9)24)]	1
Double relay (DPDT) 20 ... 72 V DC/20 ... 250 V AC[24)]	2
NAMUR signal[9)]	4
Transistor (NPN/PNP) 10 ... 55 V DC[1)25)]	5
Two-wire (8/16 mA) 12 ... 36 V DC[27)]	6
Approvals	
Without approvals	A
Overfill protection (WHG)[9)]	B
ATEX II 1G, ½G, 2G Ex ia IIC T6[6)]	W
ATEX II 1G, ½G, 2G Ex ia IIC T6 + WHG[6)9)]	C
ATEX II ½G, 2G Ex d IIC T6 + WHG[5)15)]	D
ATEX II 1G, ½G, 2G Ex ia IIC T6 + shipping approvals[6)16)]	E
ATEX II ½G, 2G Ex d IIC T6 + shipping approvals[5)15)]	F
ATEX II 1G, ½G, 2G Ex ia IIC T6 + ATEX II ½D IP6X T[6)7)17)]	G
IECEx Ex ia IIC T6[6)18)]	H
Shipping approvals[16)]	K
ATEX II 3G Ex nA II T5 ... T1 X[14)19)]	L
FM (IS) Class I, II, III, Div. 1, Groups A, B, C, D, E, F, G[6)20)]	N
FM (XP) Class I, Div. 1, Groups A, B, C, D; (DIP) Class II, III, Div. 1, Groups E, F, G[2)5)10)]	P
FM (NI) Class I, Div. 2, Groups A, B, C, D[21)]	Q
IECEx d IIC T6 ... T2 Ga/Gb[5)15)]	R
CSA (XP) Class I, II, III Div. 1, Groups A, B, C, D, E, F, G[5)15)]	S
CSA (NI) Class I, II, III, Div. 2, Groups A, B, C, D, E, F, G[22)]	T
BR-Ex d IIC T6 ... T2[5)23)]	U
CSA (IS) Class I, II, III Div. 1, Groups A, B, C, D, E, F, G[6)9)]	V
ATEX II ½D, 2D ExtD A20/21, A21 IP6 T...[19)26)]	X
GOST-R/EAC + ATEX II 1G, ½G, 2G Ex ia IIC T6 + WHG[9)26)]	Z J 1 A
GOST-R/EAC + ATEX II ½G, Ex d IIC T2 ... T6 + WHG[5)15)28)]	Z J 1 B
GOST-R/EAC + ATEX II ½G, Ex d IIC T2 ... T6 + Ship approval[5)15)28)]	Z J 1 C
GOST-R/EAC + ATEX II 1G, ½G, 2G Ex ia IIC T6 + II ½D, 2D ExtD[7)17)28)]	Z J 1 D
GOST-R/EAC + ATEX II ½D, 2D ExtD A20/21, A21 IP6 T...[17)26)]	Z J 1 E
Process connection	
Thread G¾" A, PN 64/316L	A 0 0
Thread G¾" A, PN 64/316L Ra < 0.8 µm	A 0 1
Thread ¾" NPT, PN 64/316L	A 0 2
Thread ¾" NPT, PN 64/316L Ra < 0.8 µm	A 0 3
Thread ¾" NPT, PN 64/Alloy 400 (2.4360)	A 0 4
Thread G¾" A, PN 64/Alloy C22 (2.4602)	A 0 5
Thread ¾" NPT, PN 64/Alloy C22 (2.4602)	A 0 6
Thread G1" A, PN 64/316L	A 0 7
Thread G1" A, PN 64/316L ECTFE coated MB1982[4)]	A 0 8
Thread G1" A, PN 64/316L PFA coated[4)]	A 1 0
Thread G1" A, PN 64/Alloy 400 (2.4360)	A 1 1
Thread G1" A, PN 64/316L Ra < 0.8 µm	A 1 2
Thread 1" NPT, PN 64/316L	A 1 3
Thread 1" NPT, PN 64/316L ECTFE coated MB1982[4)]	A 1 4

	Article No.
SITRANS LVL200 Vibrating point level switch, standard design	**7ML5746-** ■ ■ ■ ■ ■ - ■ ■ A 0 ■ ■ ■
Detects level and material in liquids and slurries. Short insertion. For hazardous applications.	
Thread 1" NPT, PN 64/316L PFA-coated[4)]	A 1 5
Thread 1" NPT, PN 64/Alloy 400 (2.4360)	A 1 6
Thread 1" NPT, PN 64/316L Ra < 0.8 µm	A 1 7
Thread G1" A, PN 64/Alloy C22 (2.4602)	A 1 8
Thread G1" A, PN 64/Alloy C22 (2.4602) Ra < 0.3 µm	A 2 0
Thread G1½" A, PN 64/316L	A 2 1
Thread G1½" A, PN 64/316L Ra < 0.8 µm	A 2 2
Thread G1½" A, PN 64/Alloy C22 (2.4602)	A 2 3
Thread 1" NPT, PN 64/Alloy C22 (2.4602)	A 2 4
Thread 1½" NPT, PN 64/316L	A 2 5
Thread 1½" NPT, PN 64/316L Ra < 0.8 µm	A 2 6
Thread 1½" NPT, PN 64/Alloy C22 (2.4602)	A 2 7
Thread G2" A, PN 64/316L	A 2 8
Thread M27 x 1.5, PN 64/316L	A 3 0
Conus DN 25, PN 40/316L Ra < 0.3 µm	A 3 1
Conus DN 25, PN 40/316L Ra < 0.8 µm	A 3 2
Conus DN 25, PN 40/ECTFE (ZB3033)[4)]	A 3 3
Conus M52, PN 40/316L	A 3 4
Conus M52, PN 40/316L Ra < 0.3 µm	A 3 5
Conus M52, PN 40/316L Ra < 0.8 µm	A 3 6
Tri-Clamp 1", PN 16/316L Ra < 0.3 µm	A 3 7
Tri-Clamp 1", PN 16/Alloy C22 (2.4602)	A 3 8
Tri-Clamp 1", PN 16/316L Ra < 0.8 µm	A 4 0
Tri-Clamp 1½", PN 16/316L Ra < 0.3 µm	A 4 1
Tri-Clamp 1½", PN 16/Alloy C22 (2.4602)	A 4 2
Tri-Clamp 1½", PN 16/316L Ra < 0.8 µm	A 4 3
Tri-Clamp 2", PN 16/316L Ra < 0.3 µm	A 4 4
Tri-Clamp 2", PN 16/Alloy C22 (2.4602)	A 4 5
Tri-Clamp 2", PN 16/316L Ra < 0.8 µm	A 4 6
Tri-Clamp 2½", PN 10/316L Ra < 0.3 µm	A 4 7
Tri-Clamp 2½", PN 10/316L Ra < 0.8 µm	A 4 8
Tri-Clamp 3", PN 10/316L Ra < 0.3 µm	A 5 0
Tri-Clamp 3", PN 10/316L Ra < 0.8 µm	A 5 1
Bolting DN 32, PN 40 DIN11851/316L Ra < 0.3 µm	A 5 2
Bolting DN 32, PN 40 DIN11851/316L Ra < 0.8 µm	A 5 3
Bolting DN 25, PN 40 DIN11851/316L Ra < 0.3 µm	A 5 4
Bolting DN 25, PN 40 DIN11851/316L Ra < 0.8 µm	A 5 5
Bolting DN 40, PN 40 DIN11851/316L Ra < 0.3 µm	A 5 6
Bolting DN 40, PN 40 DIN11851/316L Ra < 0.8 µm	A 5 7
Bolting DN 40, PN 40 DIN11864-1 A/316L Ra < 0.8 µm ZB3052	A 5 8
Bolting DN 50, PN 25 DIN11851/316L Ra < 0.3 µm	A 6 0
Bolting DN 50, PN 25 DIN11851/316L Ra < 0.8 µm	A 6 1
Bolting DN 50, PN 25 DIN11864-1 A/316L Ra < 0.8 µm ZB3052	A 6 2
Hygienic w. compr. nut F40, PN 25/316L	A 6 3
Hygienic w. compr. nut F40, PN 25/316L Ra < 0.3 µm	A 6 4
Hygienic w. compr. nut F40, PN 25/316L Ra < 0.8 µm	A 6 5
Varivent N50-40/316L Ra < 0.3 µm	A 6 6
Varivent N50-40/316L Ra < 0.8 µm	A 6 7
Varivent N125/100/316L Ra < 0.8 µm	A 6 8
DRD flange, PN 40/316L ZB3007	A 7 0
SMS DN 38/316L Ra < 0.8 µm[4)]	A 7 1
SMS DN 51, PN 6/316L Ra < 0.8 µm[4)]	A 7 2
Swagelok VCR screwing ZG2579, PN 64/316L	A 7 3
Neumo biocontrol size 25, PN 16/316L Ra < 0.8 µm	A 7 4

© Siemens 2020

Selection and ordering data

	Article No.
SITRANS LVL200 Vibrating point level switch, standard design Detects level and material in liquids and slurries. Short insertion. For hazardous applications.	**7ML5746-** ■■■■■ - ■■ **A 0** ■■■
Neumo biocontrol size 50, PN 16/316L Ra < 0.8 µm[4]	**A 7 5**
Neumo biocontrol size 65, PN 16/316L Ra < 0.8 µm	**A 7 6**
Neumo biocontrol size 80, PN 16/316L Ra < 0.8 µm	**A 7 7**
SÜDMO DN 50, PN 10/316L Ra < 0.8 µm	**A 7 8**
Small flange DN 25, PN 1.5 DIN 28403/316L pol. Ra < 0.8 µm	**A 8 0**
Small flange DN 40, PN 1.5 DIN 28403/316L pol. Ra < 0.8 µm	**A 8 1**
Ingold connection, PN16/316L a < 0.8 µm (acc. to MB2523)	**A 8 2**
Ingold connection, PN 16/Alloy C22 (2.4602) Ra < 0.8 µm (acc. to MB6017)	**A 8 3**
Terminal DN 33.7 PN 40 DIN 11864-3-A-/316L BN2 Ra < 0.8 µm[4]	**A 8 4**
Hygienic fl. DN 50 PN 16 DIN 11864-2-A-/316L Ra < 0.8 µm	**A 8 5**
Flange DN 25, PN 6 Form C, DIN 2501/316L	**A 8 6**
Flange DN 25, PN 6 Form C, DIN 2501/PFA[4]	**A 8 7**
Flange DN 25, PN 40 Form C, DIN 2501/316L	**A 8 8**
Flange DN 25, PN 40 Form C, DIN 2501/Alloy C22 (2.4602)	**B 0 0**
Flange DN 25, PN 40 Form C, DIN 2501/ECTFE[4]	**B 0 1**
Flange DN 25, PN 40 Form C, DIN 2501/PFA[4]	**B 0 2**
Flange DN 25, PN 40 Form C, DIN 2501/Enamelled	**B 0 3**
Flange DN 25, PN 40 Form D, DIN 2501/316L	**B 0 4**
Flange DN 25, PN 40 Form F, DIN 2501/316L	**B 0 5**
Flange DN 25, PN 40 Form N, DIN 2501/316L	**B 0 6**
Flange DN 25, PN 40 Form N, DIN 2501/Alloy C22 (2.4602)	**B 0 7**
Flange DN 25, PN 40 Form N, DIN 2501/Alloy 400 (2.4360) solid	**B 0 8**
Flange DN 25, PN 40 V13, DIN 2501/316L	**B 1 0**
Flange DN 32, PN 40 Form C, DIN 2501/316L	**B 1 1**
Flange DN 32, PN 40 Form C, DIN 2501/ECTFE[4]	**B 1 2**
Flange DN 40, PN 6 Form C, DIN 2501/316L	**B 1 3**
Flange DN 40, PN 6 Form C, DIN 2501/ECTFE[4]	**B 1 4**
Flange DN 40, PN 40 Form C, DIN 2501/316L	**B 1 5**
Flange DN 40, PN 40 Form C, DIN 2501/Alloy C22 (2.4602)	**B 1 6**
Flange DN 40, PN 40 Form C, DIN 2501/ECTFE[4]	**B 1 7**
Flange DN 40, PN 40 Form C, DIN 2501/PFA[4]	**B 1 8**
Flange DN 40, PN 40 Form C, DIN 2501/Enamelled[3]	**B 2 0**
Flange DN 40, PN 40 Form F, DIN 2501/316L	**B 2 1**
Flange DN 40, PN 40 Form N, DIN 2501/316L	**B 2 2**
Flange DN 40, PN 40 Form E, DIN 2501/316L	**B 2 3**
Flange DN 40, PN 40 V13, DIN 2501/316L	**B 2 4**
Flange DN 50, PN 40 Form C, DIN 2501/316L	**B 2 5**
Flange DN 50, PN 40 Form C, DIN 2501/Alloy C22 (2.4602)	**B 2 6**
Flange DN 50, PN 40 Form C, DIN 2501/ECTFE[4]	**B 2 7**
Flange DN 50, PN 40 Form C, DIN 2501/ECTFE (ZB3108)[4]	**B 2 8**

	Article No.
SITRANS LVL200 Vibrating point level switch, standard design Detects level and material in liquids and slurries. Short insertion. For hazardous applications.	**7ML5746-** ■■■■■ - ■■ **A 0** ■■■
Flange DN 50, PN 40 Form C, DIN 2501/PFA[4]	**B 3 0**
Flange DN 50, PN 40 Form D, DIN 2501/316L	**B 3 1**
Flange DN 50, PN 40 Form D, DIN 2501/Alloy C22 (2.4602)	**B 3 2**
Flange DN 50, PN 40 Form F, DIN 2501/316L	**B 3 3**
Flange DN 50, PN 40 Form N, DIN 2501/316L	**B 3 4**
Flange DN 50, PN 40 Form N, DIN 2501/Alloy C22 (2.4602)	**B 3 5**
Flange DN 50, PN 40 Form E, DIN 2501/316L	**B 3 6**
Flange DN 50, PN 40 V13, DIN 2501/316L	**B 3 7**
Flange DN 50, PN 40 R13, DIN 2501/316L	**B 3 8**
Flange DN 50, PN 64 Form F, DIN 2501/316L	**B 4 0**
Flange DN 50, PN 64 Form N, DIN 2501/Alloy C22 (2.4602)	**B 4 1**
Flange DN 50, PN 64 Form C, DIN 2501/316L	**B 4 2**
Flange DN 50, PN 64 Form L, DIN 2501/316L	**B 4 3**
Flange DN 50, PN 100 Form E, DIN 2501/316L	**B 4 4**
Flange DN 50, PN 100 Form L, DIN 2501/316L	**B 4 5**
Flange DN 65, PN 40 Form C, DIN 2501/316L	**B 4 6**
Flange DN 65, PN 40 Form C, DIN 2501/Alloy C22 (2.4602)	**B 4 7**
Flange DN 65, PN 40 Form C, DIN 2501/ECTFE[4]	**B 4 8**
Flange DN 65, PN 40 Form C, DIN 2501/PFA[4]	**B 5 0**
Flange DN 65, PN 40 Form F, DIN 2501/316L	**B 5 1**
Flange DN 65, PN 64 Form E, DIN 2501/316L	**B 5 2**
Flange DN 80, PN 40 Form C, DIN 2501/316L	**B 5 3**
Flange DN 80, PN 40 Form C, DIN 2501/Alloy C22 (2.4602)	**B 5 4**
Flange DN 80, PN 40 Form C, DIN 2501/ECTFE[4]	**B 5 5**
Flange DN 80, PN 40 Form C, DIN 2501/PFA[4]	**B 5 6**
Flange DN 80, PN 40 Form C, DIN 2501/Enamelled[3]	**B 5 7**
Flange DN 80, PN 40 Form F, DIN 2501/316L	**B 5 8**
Flange DN 80, PN 40 Form N, DIN 2501/316L	**B 6 0**
Flange DN 100, PN 16 Form C, DIN 2501/316L	**B 6 2**
Flange DN 100, PN 16 Form C, DIN 2501/Alloy C22 (2.4602)	**B 6 3**
Flange DN 100, PN 16 Form C, DIN 2501/ECTFE[4]	**B 6 4**
Flange DN 100, PN 16 Form C, DIN 2501/PFA[4]	**B 6 5**
Flange DN 100, PN 16 Form C, DIN 2501/Enamelled[3]	**B 6 6**
Flange DN 100, PN 16 Form D, DIN 2501/316L	**B 6 7**
Flange DN 100, PN 16 Form F, DIN 2501/316L	**B 6 8**
Flange DN 100, PN 16 Form N, DIN 2501/316L	**B 7 0**
Flange DN 100, PN 40 Form C, DIN 2501/316L	**B 7 1**
Flange DN 100, PN 40 Form C, DIN 2501/ECTFE[4]	**B 7 2**
Flange DN 100, PN 40 Form C, DIN 2501/PFA[4]	**B 7 3**

© Siemens 2020

Selection and ordering data

	Article No.
SITRANS LVL200 Vibrating point level switch, standard design Detects level and material in liquids and slurries. Short insertion. For hazardous applications.	**7ML5746-** ■■■■■ - ■■ **A 0** ■■■
Flange DN 100, PN 40 Form C, DIN 2501/Enamelled[3]	**B 7 4**
Flange DN 100, PN 40 Form F, DIN 2501/316L	**B 7 5**
Flange DN 100, PN 40 Form N, DIN 2501/316L	**B 7 6**
Flange DN 100, PN 40 V13, DIN 2501/316L	**B 7 7**
Flange DN 100, PN 64 Form E, DIN 2501/316L	**B 7 8**
Flange DN 100, PN 100 Form E, DIN 2501/316L	**B 8 0**
Flange DN 100, PN 100 Form L, DIN 2501/316L	**B 8 1**
Flange DN 125, PN 16 Form F, DIN 2501/316L	**B 8 2**
Flange DN 125, PN 40 Form C, DIN 2501/316L	**B 8 3**
Flange DN 125, PN 40 Form N, DIN 2512/ 316L	**B 8 4**
Flange DN 150, PN 16 Form C, DIN 2501/316L	**B 8 5**
Flange DN 150, PN 16 Form C, DIN 2501/Alloy C22 (2.4602)	**B 8 6**
Flange DN 150, PN 16 Form C, DIN 2501/ECTFE[4]	**B 8 7**
Flange DN 150, PN 16 Form C, DIN 2501/PFA[4]	**B 8 8**
Flange DN 150, PN 16 Form D, DIN 2501/316L	**C 0 0**
Flange DN 150, PN 40 Form C, DIN 2501/316L	**C 0 1**
Flange DN 150, PN 40 Form C, DIN 2501/Alloy C22 (2.4602)	**C 0 2**
Flange DN 150, PN 40 Form F, DIN 2501/316L	**C 0 3**
Flange DN 150, PN 40 Form N, DIN 2512/316L	**C 0 4**
Flange DN 200, PN 10 Form C, DIN 2501/ECTFE[4]	**C 0 5**
Flange DN 200, PN 16 Form C, DIN 2501/316L	**C 0 6**
Flange DN 25, PN 40 Form B1, EN 1092-1/316L	**C 0 7**
Flange DN 25, PN 40 Form B1, EN 1092-1/Alloy C22 (2.4602)	**C 0 8**
Flange DN 25, PN 40 Form B1, EN/316L/PFA[4]	**C 1 0**
Flange DN 25, PN 40 Form B1, EN 1092-1/Enamelled[3]	**C 1 1**
Flange DN 25, PN 40 Form B2, EN 1092-1/316L	**C 1 2**
Flange DN 25, PN 40 Form F, EN 1092-1/316L	**C 1 3**
Flange DN 25, PN 63 Form B1, EN 1092-1/316L	**C 1 4**
Flange DN 25, PN 100 Form B2, EN 1092-1/316L	**C 1 5**
Flange DN 40, PN 40 Form B1, EN/316L	**C 1 6**
Flange DN 40, PN 40 Form B1, EN 1092-1/PFA[4]	**C 1 7**
Flange DN 40, PN 40 Form B2, EN/316L	**C 1 8**
Flange DN 50, PN 40 Form B1, EN/316L	**C 2 0**
Flange DN 50, PN 40 Form B1, EN 1092-1/Alloy C22 (2.4602)	**C 2 1**
Flange DN 50, PN 40 Form B1, EN 1092-1/Alloy 400 (2.4360) ZB2977	**C 2 2**
Flange DN 50, PN 40 Form B1, EN 1092-1/ECTFE[4]	**C 2 3**
Flange DN 50, PN 40 Form B1, EN/316L/PFA[4]	**C 2 4**
Flange DN 50, PN 40 Form B1, EN 1092-1/Enamelled[3]	**C 2 5**

	Article No.
SITRANS LVL200 Vibrating point level switch, standard design Detects level and material in liquids and slurries. Short insertion. For hazardous applications.	**7ML5746-** ■■■■■ - ■■ **A 0** ■■■
Flange DN 50, PN 40 Form C, EN 1092-1/316L	**C 2 6**
Flange DN 50, PN 40 Form D, EN/316L	**C 2 7**
Flange DN 50, PN 40 Form D, EN 1092-1/Alloy C22 (2.4602)	**C 2 8**
Flange DN 50, PN 40 Form B2, EN 1092-1/316L	**C 3 0**
Flange DN 50, PN 40 Form E, EN 1092-1/316L	**C 3 1**
Flange DN 80, PN 40 Form B1, EN 1092-1/316L	**C 3 2**
Flange DN 80, PN 40 Form B1, EN 1092-1/Alloy C22 (2.4602)	**C 3 3**
Flange DN 80, PN 40 Form B1, EN 1092-1/ECTFE[4]	**C 3 4**
Flange DN 80, PN 40 Form B1, EN 1092-1/Enamelled[3]	**C 3 5**
Flange DN 80, PN 40 Form B2, EN 1092-1/316L	**C 3 6**
Flange DN 100, PN 16 Form B1, EN 1092-1/316L	**C 3 7**
Flange DN 100, PN 16 Form B1, EN 1092-1/Alloy C22 (2.4602)	**C 3 8**
Flange DN 100, PN 16 Form B1, EN 1092-1/Enamelled[3]	**C 4 0**
Flange DN 100, PN 40 Form B1, EN 1092-1/316L	**C 4 1**
Flange DN 100, PN 40 Form B1, EN 1092-1/Enamelled[3]	**C 4 2**
Flange DN 100, PN 40 Form C, EN 1092-1/316L	**C 4 3**
Flange DN 100, PN 63 Form B2, EN 1092-1/316L	**C 4 4**
Flange DN 150, PN 16 Form B1, EN 1092-1/316L	**C 4 5**
Flange DN 150, PN 16 Form B1, EN 1092-1/PFA[4]	**C 4 6**
Flange DN 150, PN 40 Form B1, EN 1092-1/316L	**C 4 7**
Flange DN 150, PN 40 Form B1, EN 1092-1/ECTFE[4]	**C 4 8**
Flange DN 150, PN 40 Form B2, EN 1092-1/316L	**C 5 0**
Flange 1" 150 lb ASME B16.5/316L	**C 5 1**
Flange 1" 150 lb RF, ASME B16.5/Alloy C22 (2.4602)	**C 5 2**
Flange 1" 150 lb RF, ASME B16.5/Alloy 400 (2.4360) ZB2977	**C 5 3**
Flange 1" 150 lb RF, ASME B16.5/ECTFE[4]	**C 5 4**
Flange 1" 150 lb RF, ASME B16.5/PFA[4]	**C 5 5**
Flange 1" 150 lb RF, ASME B16.5/Enamelled[3]	**C 5 6**
Flange 1" 300 lb RF, ASME B16.5/316L	**C 5 7**
Flange 1" 300 lb RF, ASME B16.5/ECTFE[4]	**C 5 8**
Flange 1" 600 lb RF, ASME B16.5/316L	**C 6 0**
Flange 1½" 150 lb RF, ASME B16.5/316L	**C 6 1**
Flange 1½" 150 lb RF, ASME B16.5/Alloy C22 (2.4602)	**C 6 2**
Flange 1½" 150 lb RF, ASME B16.5/ECTFE[4]	**C 6 3**
Flange 1½" 150 lb RF, ASME B16.5/PFA[4]	**C 6 4**
Flange 1½" 150 lb RF, ASME B16.5 Enamelled[3]	**C 6 5**
Flange 1½" 150 lb FF, ASME B16.5/ECTFE[4]	**C 6 6**
Flange 1½" 300 lb RF, ASME B16.5/316L	**C 6 7**
Flange 1½" 300 lb RF, ASME B16.5/Alloy 400 (2.4360) ZB2977	**C 6 8**
Flange 1½" 300 lb RF, ASME B16.5/ECTFE[3]	**C 7 0**
Flange 1½" 600 lb RF, ASME B16.5/316L	**C 7 1**
Flange 2" 150 lb RF, ASME B16.5/316L	**C 7 2**
Flange 2" 150 lb RF, ASME B16.5/Alloy C22 (2.4602)	**C 7 3**

© Siemens 2020

Selection and ordering data

	Article No.
SITRANS LVL200 Vibrating point level switch, standard design Detects level and material in liquids and slurries. Short insertion. For hazardous applications.	**7ML5746-** ■■■■■ - ■■ **A 0** ■■■
Flange 2" 150 lb RF, ASME B16.5/Alloy 400 (2.4360) ZB2977	**C 7 4**
Flange 2" 150 lb RF, ASME B16.5/ECTFE[4)]	**C 7 5**
Flange 2" 150 lb RF, ASME B16.5/PFA[4)]	**C 7 6**
Flange 2" 150 lb RF, ASME B16.5/Enamelled[3)]	**C 7 7**
Flange 2" 150 lb FF, ASME B16.5/316L	**C 7 8**
Flange 2" 150 lb FF, ASME B16.5/ECTF[4)]	**C 8 0**
Flange 2" 150 lb SG (small groove), ASME B16.5/316L	**C 8 1**
Flange 2" 300 lb RF, ASME B16.5/316L	**C 8 2**
Flange 2" 300 lb RF, ASME B16.5/Alloy C22 (2.4602)	**C 8 3**
Flange 2" 300 lb RF, ASME B16.5/ECTFE[4)]	**C 8 5**
Flange 2" 300 lb RF, ASME B16.5/PFA[4)]	**C 8 6**
Flange 2" 300 lb RF, ASME B16.5 Enamelled[3)]	**C 8 7**
Flange 2" 300 lb RJF, ASME B16.5/316L	**C 8 8**
Flange 2" 300 lb ST, ASME B16.5/316L	**D 0 0**
Flange 2" 300 lb LG (large groove), ASME B16.5/316L	**D 0 1**
Flange 2" 300 lb LT, ASME B16.5/316L	**D 0 2**
Flange 2" 600 lb RF, ASME B16.5/316L	**D 0 3**
Flange 2" 600 lb RF, ASME B16.5/Alloy 400 (2.4360) ZB2977	**D 0 4**
Flange 2" 600 lb RF, ASME B16.5/ECTFE[4)]	**D 0 5**
Flange 2" 600 lb RJF, ASME B16.5/316L	**D 0 6**
Flange 2" 600 lb LG, ASME B16.5/316L	**D 0 7**
Flange 2" 900 lb RJF, ASME B16.5/316L	**D 0 8**
Flange 2½" 150 lb RF, ASME B16.5/316L	**D 1 0**
Flange 2½" 300 lb RF, ASME B16.5/316L	**D 1 1**
Flange 3" 150 lb RF, ASME B16.5/316L	**D 1 2**
Flange 3" 150 lb RF, ASME B16.5/Alloy C22 (2.4602)	**D 1 3**
Flange 3" 150 lb RF, ASME B16.5/ECTFE[4)]	**D 1 4**
Flange 3" 150 lb RF, ASME B16.5/PFA[4)]	**D 1 5**
Flange 3" 150 lb RF, ASME B16.5/Enamelled[3)]	**D 1 6**
Flange 3" 150 lb FF, ASME B16.5/316L	**D 1 7**
Flange 3" 150 lb FF, ASME B16.5/ECTFE[4)]	**D 1 8**
Flange 3" 150 lb FF, ASME B16.5/PFA[4)]	**D 2 0**
Flange 3" 300 lb RF, ASME B16.5/316L	**D 2 1**
Flange 3" 300 lb RF, ASME B16.5/Alloy C22 (2.4602)	**D 2 2**
Flange 3" 300 lb RF, ASME B16.5/ECTFE[4)]	**D 2 3**
Flange 3" 300 lb RF, ASME B16.5/PFA[4)]	**D 2 4**
Flange 3" 300 lb RF, ASME B16.5/Enamelled[3)]	**D 2 5**
Flange 3" 600 lb RF, ASME B16.5/316L	**D 2 6**
Flange 3½" 150 lb RF, ASME B16.5/316L	**D 2 7**
Flange 3½" 150 lb RF, ASME B16.5/ECTFE[4)]	**D 2 8**
Flange 4" 150 lb RF, ASME B16.5/316L	**D 3 0**
Flange 4" 150 lb RF, ASME B16.5/Alloy C22 (2.4602)	**D 3 1**
Flange 4" 150 lb RF, ASME B16.5/ECTFE[4)]	**D 3 2**
Flange 4" 150 lb RF, ASME B16.5/PFA[4)]	**D 3 3**
Flange 4" 150 lb RF, ASME B16.5/Enamelled[3)]	**D 3 4**
Flange 4" 150 lb LT, ASME B16.5/316L	**D 3 5**
Flange 4" 300 lb RF, ASME B16.5/316L	**D 3 6**
Flange 4" 300 lb RF, ASME B16.5/Alloy C22 (2.4602)	**D 3 7**
Flange 4" 300 lb RF, ASME B16.5/ECTFE[4)]	**D 3 8**
Flange 4" 300 lb RJF, ASME B16.5/316L	**D 4 0**
Flange 4" 300 lb LG, ASME B16.5/316L	**D 4 1**
Flange 4" 300 lb LT, ASME B16.5/316L	**D 4 2**
Flange 4" 600 lb RF, ASME B16.5/316L	**D 4 3**
Flange 4" 600 lb RJF, ASME B16.5/316L	**D 4 4**
Flange 6" 150 lb RF, ASME B16.5/316L	**D 4 5**

	Article No.
SITRANS LVL200 Vibrating point level switch, standard design Detects level and material in liquids and slurries. Short insertion. For hazardous applications.	**7ML5746-** ■■■■■ - ■■ **A 0** ■■■
Flange 6" 150 lb RF, ASME B16.5/Alloy C22 (2.4602)	**D 4 6**
Flange 6" 150 lb RF, ASME B16.5/ECTFE[4)]	**D 4 7**
Flange 6" 150 lb RF, ASME B16.5/PFA[4)]	**D 4 8**
Flange 6" 150 lb RJF, ASME B16.5/316L	**D 5 0**
Flange 6" 300 lb RF, ASME B16.5/316L	**D 5 1**
Flange 8" 150 lb RF, ASME B16.5/316L	**D 5 2**
Flange 8" 150 lb RF, ASME B16.5/ECTFE[4)]	**D 5 3**
Flange 1" BS.10 Table E/316L	**D 5 4**
Flange 1" BS.10 Table E/PFA[4)]	**D 5 5**
Flange 1½" BS.10 Table E/316L	**D 5 6**
Flange 3½" BS.10 Table E/316L	**D 5 7**
Flange 4" BS.10 Table E/ECTFE[4)]	**D 5 8**
Flange DN 40 10K, JIS/316L	**D 6 0**
Flange DN 50 10K, JIS/316L	**D 6 1**
Flange DN 80 10K, JIS/316L	**D 6 2**
Flange DN 100 10K, JIS/316L	**D 6 3**
Thread R1 PN 64, EN 10226-1/316L	**D 6 5**
Flange 2" 900 lb RF, ASME B16.5/316L	**D 7 0**
Adapter/Process temperature	
Without adapter/-50 ... +150 °C (-58 ... +302 °F)	**1**
With adapter/-50 ... +200 °C (-58 ... +392 °F)[13)]	**2**
With adapter/-50 .... +250 °C (-58 ... +482 °F)	**3**
With gas-tight leadthrough/-50 ... +150 °C (-58 ... +302 °F)	**4**
With gas-tight leadthrough/-50 ... +250 °C (-58 ... +482 °F)	**5**
Housing/Cable entry	
Aluminum IP66/IP67/M20 x 1.5	**A**
Aluminum IP66/IP67/½" NPT	**B**
316L stainless steel (electropolished) IP66/IP67/M20 x 1.5	**C**
316L stainless steel (electropolished) IP66/IP67/½" NPT	**D**
Plastic single chamber IP66/IP67/M20 x 1.5	**E**
Plastic single chamber IP66/IP67/½" NPT	**F**
Stainless steel chamber (precision casting) IP66/IP67/M20 x 1.5	**G**
Stainless steel chamber (precision casting) IP66/IP67/½" NPT	**H**
Aluminum IP66/IP67/M20 x 1.5 Special HARTING plug HAN 7D (bent) according to Tier One (ZB7555)[11)]	**V**

© Siemens 2020

Selection and ordering data

	Order code
Further designs	
Please add "**-Z**" to Article No. and specify Order code(s).	
Switching status indication with colors red-green[12]	**A21**
Cleaning including Certificate (oil, grease, and silicone free)	**W01**
Identification label (measurement loop) stainless steel: max. 40 characters, add in plain text. To add more than one line, use a coma "," for line break.	**Y17**
Identification Label (measurement loop) foil: max. 40 characters add in plain text. To add more than one line, use a coma "," for line break.	**Y18**
NACE0175 to 3.1 Material Certificate for material (EN10204 NACE MR 0175)[8] Note: not available with Process Connection and Rigid extension coatings PFA, ECTFE, and Enamel. NACE not available with Hygienic process connections.	**D07**
Material Inspection certificate 3.1 of EN 10204[8]	**C05**
2.2-Factory certificate for material (EN 10204)[8]	**C15**
Functional Safety (SIL 2). Device suitable for use in accordance with IEC 61508 and IEC 61511[8]	**C20**
Dye penetration test, results confirmed via a 3.1 certificate/instrument (EN 10204)[8]	**C13**
X-ray test + 3.1 certificate/instrument[8]	**C14**
Positive material identification test + 3.1 certificate/instrument[8]	**C16**
Roughness test + 3.1 certificate/instrument[8]	**C18**
3.1-Inspection Certificate for instrument with test data (EN 10204)[8]	**C25**
Quality and test plan	**C26**
Pressure test + 3.1 certificate/instrument[8]	**C31**
Helium leak test + 3.1 certificate/instrument[8]	**C32**
Ferrite measuring accuracy to DIN 32514-1 + 3.1 certificate/instrument[8]	**C60**
Pressure test according to Norsok + 3.1 certificate/instrument[8]	**C61**
Operating Instructions	
All literature is available to download for free, in a range of languages, at	

http://www.siemens.com/processinstrumentation/documentation

Spare Parts and Accessories	Article No.
Electronics module SITRANS LVL200 Relay	**7ML1830-1NC**
Electronics module SITRANS LVL200 Contactless	**7ML1930-6AA**
NAMUR spare electronics module	**A5E35817107**
SITRANS SCSC single channel signal conditioner and remote test	**7ML5760-.....-....**
SITRANS TCSC two channel signal conditioner and remote test	**7ML5761-.....-....**
LVL200 Threaded Welded Socket	
• G¾" A/316L with FKM Seal	**7ML1930-1EE**
• G1" A/316L with FKM Seal	**7ML1930-1EF**
• M27 x 1.5/316L with FKM Seal	**7ML1930-1EG**
• G¾" A/316L with EPDM Seal	**7ML1930-1EH**
• G1" A/316L with EPDM Seal	**7ML1930-1EJ**
• M27 x 1.5/316L with EPDM Seal	**7ML1930-1EK**

1) Available only with Adapter/Process temperature options 1, 3, 4, and 5.
2) Available only with Housing/Protection/Cable option B.
3) Available only with Adapter/Process Temperature options 1, 2, and 4.
4) Not available with Adapter/Process Temperature options 2, 3, and 5.
5) Not available with Adapter/Process Temperature options 2, 4, and 5.
6) Available only with Electronics options 4 and 6.
7) Not available with ECTFE coated probe options.
8) Listed Certificates are not available with all configurations please contact factory for more information.
9) Not available with Housing/Protection/Cable Option V.
10) Not available with PFA and ECTFE coating options.
11) Available only with Approval option A.
12) Available only with Relay Electronic options and Non-hazardous Approval options.
13) Available only with Enamelled Process connection options.
14) Available only with Electronic options 4, 5, and 6.
15) Available only with Aluminum Housing/Protection/Cable options.
16) Not available with Stainless Steel (electropolished) Housing/Protection/Cable options and certain glands.
17) Not available with Plastic and Stainless Steel (electropolished) Housing/Protection/Cable options and certain glands.
18) Not available with Housing/Protection/Cable options D, and V.
19) Not available with Plastic Housing/Protection/Cable options and certain glands.
20) Not available with Housing/Protection/Cable options A, E, G, and V.
21) Available only with Housing/Protection/Cable options B, D, F, and H.
22) Not available with Housing/Protection/Cable options C and V.
23) Available only with Housing/Protection/Cable options A, B, and H.
24) Not available with Approval options C, E, G, H, L, N, V, W, J1A, J1D, and J1E.
25) Not available with Approval options C, E, G, H, N, V, W, J1A, J1D, and J1E.
26) Available only with Electronic option 4.
27) Not available with EAC approval options.
28) Not available with Electronic option 6.

© Siemens 2020

Selection and ordering data

	Article No.
SITRANS LVL200 Vibrating point level switch, rigid extension design ↗	**7ML5747-** ■■■■■ - ■■■■■■
Detects level and material in liquids and slurries. Top mount, with extension options to 6 m (19.69 ft). Ideal for hazardous applications.	
↗ Click on the Article No. for the online configuration in the PIA Life Cycle Portal.	
Electronics	
Contactless electronic switch 20 ... 250 V AC/DC[1)9)14)]	1
Double relay (DPDT) 20 ... 72 V DC/20 ... 250 V AC[14)]	2
NAMUR signal[9)]	4
Transistor (NPN/PNP) 10 ... 55 V DC[1)15)]	5
Two-wire (8/16 mA) 12 ... 36 V DC[25)]	6
Approvals	
Without approvals	A
Overfill protection (WHG)[9)]	B
ATEX II 1G, ½G, 2G Ex ia IIC T6[6)]	W
ATEX II 1G, ½G, 2G Ex ia IIC T6 + WHG[6)9)]	C
ATEX II ½G, 2G Ex d IIC T6 + WHG[5)7)16)]	D
ATEX II 1G, ½G, 2G Ex ia IIC T6 + shipping approvals[6)17)]	E
ATEX II ½G, 2G Ex d IIC T6 + shipping approvals[5)7)16)]	F
ATEX II 1G, ½G, 2G Ex ia IIC T6 + ATEX II ½D IP6X T[6)8)18)]	G
IECEx Ex ia IIC T6[6)19)]	H
Shipping approvals[17)]	K
ATEX II 3G Ex nA II T5 ... T1 X	L
FM (IS) Class I, II, III, Div. 1, Groups A, B, C, D, E, F, G[6)20)]	N
FM (XP) Class I, Div. 1, Groups A, B, C, D; (DIP) Class II, III, Div. 1, Groups E, F, G[2)5)]	P
FM (NI) Class I, Div. 2, Groups A, B, C, D[21)]	Q
IECEx d IIC T6 ... T2 Ga/Gb[5)7)16)]	R
CSA (XP) Class I, II, III Div. 1, Groups A, B, C, D, E, F, G[2)5)7)]	S
CSA (NI) Class I, II, III, Div. 2, Groups A, B, C, D, E, F, G[22)]	T
BR-Ex d IIC T6 ... T2[5)18)]	U
CSA (IS) Class I, II, III Div. 1, Groups A, B, C, D, E, F, G[6)9)]	V
ATEX II ½D, 2D ExtD A20/21, A21 IP6 T...[23)24)]	X
GOST-R/EAC + ATEX II 1G, ½G, 2G Ex ia IIC T6 + WHG[9)24)]	Z J 1 A
GOST-R/EAC + ATEX II ½G, Ex d IIC T2 ... T6 + WHG[5)7)16)26)]	Z J 1 B
GOST-R/EAC + ATEX II ½G, Ex d IIC T2 ... T6 + Ship approval[5)7)16)26)]	Z J 1 C
GOST-R/EAC + ATEX II 1G, ½G, 2G Ex ia IIC T6 + II ½D, 2D ExtD[18)24)]	Z J 1 D
GOST-R/EAC + ATEX II ½D, 2D ExtD A20/21, A21 IP6 T...[18)24)]	Z J 1 E
NOTE: **When selecting a Process connection option, process connection coating must match the extension coating and the material and surface roughness type.**	
Process connection	
Thread G¾" A, PN 64/316L	A 0 0
Thread G¾" A, PN 64/316L Ra < 0.8 µm	A 0 1
Thread ¾" NPT, PN 64/316L	A 0 2
Thread ¾" NPT, PN 64/316L Ra < 0.8 µm	A 0 3
Thread ¾" NPT, PN 64/Alloy 400 (2.4360)	A 0 4
Thread G¾" A, PN 64/Alloy C22 (2.4602)	A 0 5
Thread ¾" NPT, PN 64/Alloy C22 (2.4602)	A 0 6
Thread G1" A, PN 64/316L	A 0 7
Thread G1" A, PN 64/316L ECTFE coated MB1982[4)]	A 0 8
Thread G1" A, PN 64/316L PFA coated[4)]	A 1 0
Thread G1" A, PN 64/Alloy 400 (2.4360)	A 1 1
Thread G1" A, PN 64/316L Ra < 0.8 µm	A 1 3

	Article No.
SITRANS LVL200 Vibrating point level switch, rigid extension design	**7ML5747-** ■■■■■ - ■■■■■■
Detects level and material in liquids and slurries. Top mount, with extension options to 6 m (19.69 ft). Ideal for hazardous applications.	
Thread 1" NPT, PN 64/316L	A 1 4
Thread 1" NPT, PN 64/316L ECTFE coated MB1982[4)]	A 1 5
Thread 1" NPT, PN 64/316L PFA coated[4)]	A 1 6
Thread 1" NPT, PN 64/Alloy 400 (2.4360)	A 1 7
Thread 1" NPT, PN 64/316L Ra < 0.8 µm	A 1 8
Thread G1" A, PN 64/Alloy C22 (2.4602)	A 2 0
Thread G1½" A, PN 64/316L	A 2 1
Thread G1½" A, PN 64/316L Ra <0.8 µm	A 2 2
Thread G1½" A, PN 64/Alloy C22 (2.4602)	A 2 3
Thread 1" NPT, PN 64/Alloy C22 (2.4602)	A 2 4
Thread 1½" NPT, PN 64/316L	A 2 5
Thread 1½" NPT, PN 64/316L Ra < 0.8 µm	A 2 6
Thread 1½" NPT, PN 64/Alloy C22 (2.4602)	A 2 7
Thread G2" A, PN 64/316L	A 2 8
Thread M27 x 1.5 PN 64/316L	A 3 0
Cyl. socket/316Ti/1.4581 ECTFE coated ZB2984[4)]	A 3 1
Conus DN 25 PN 40/316L Ra < 0.3 µm	A 3 2
Conus DN 25 PN 40/316L Ra < 0.8 µm	A 3 3
Conus DN 25 PN 40/ECTFE (ZB3033)[4)]	A 3 4
Conus M52 PN 40/316L	A 3 5
Conus M52 PN 40/316L Ra < 0.3 µm	A 3 6
Conus M52 PN 40/316L Ra < 0.8 µm	A 3 7
Tri-Clamp 1" PN 16/316L Ra < 0.3 µm	A 3 8
Tri-Clamp 1" PN 16/Alloy C22 (2.4602)	A 4 0
Tri-Clamp 1" PN 16/316L Ra < 0.8 µm	A 4 1
Tri-Clamp 1½" PN 16/316L Ra < 0.3 µm	A 4 2
Tri-Clamp 1½" PN 16/Alloy C22 (2.4602)	A 4 3
Tri-Clamp 1½" PN 16/316L Ra < 0.8 µm	A 4 4
Tri-Clamp 2" PN 16/316L Ra < 0.3 µm	A 4 5
Tri-Clamp 2" PN 16/Alloy C22 (2.4602)	A 4 6
Tri-Clamp 2" PN 16/316L Ra < 0.8 µm	A 4 7
Tri-Clamp 2½" PN 10/316L Ra < 0.3 µm	A 4 8
Tri-Clamp 2½" PN 10/316L Ra < 0.8 µm	A 5 0
Tri-Clamp 3" PN 10/316L Ra < 0.3 µm	A 5 1
Clamp 3" PN16 (ø91 mm) DIN32676, ISO2852/ 316L (Ra < 0.8 µm)	A 5 2
Bolting DN 32 PN 40 DIN 11851/316L Ra < 0.3 µm	A 5 3
Bolting DN 32 PN 40 DIN 11851/316L Ra < 0.8 µm	A 5 4
Bolting DN 25 PN 40 DIN 11851/316L Ra < 0.3 µm	A 5 5
Bolting DN 25 PN 40 DIN 11851/316L Ra < 0.8 µm	A 5 6
Bolting DN 40 PN 40 DIN 11851/316L Ra < 0.3 µm	A 5 7
Bolting DN 40 PN 40 DIN 11851/316L Ra < 0.8 µm	A 5 8
Bolting DN 40 PN 40 DIN 11864-1 A/316L Ra < 0.8 µm ZB3052	A 6 0
Bolting DN 50 PN 25 DIN 11851/316L Ra < 0.3 µm	A 6 1
Bolting DN 50 PN 25 DIN 11851/316L Ra < 0.8 µm	A 6 2
Bolting DN 50 PN 25 DIN 11864-1 A/316L Ra < 0.8 µm ZB3052	A 6 3
Hygienic w.compr.nut F40 PN 25/316L	A 6 4
Hygienic w.compr.nut F40 PN 25/316L Ra < 0.3 µm	A 6 5
Hygienic w.compr.nut F40 PN 25/316L Ra < 0.8 µm	A 6 6
Varivent N50-40/316L Ra < 0.3 µm	A 6 7
Varivent N50-40/316L Ra < 0.8 µm	A 6 8
Varivent N125/100/316L Ra < 0.8 µm	A 7 0
DRD flange PN 40/316L ZB3007	A 7 1
SMS DN 38/316L Ra < 0.8 µm[4)]	A 7 2
SMS DN 51 PN 6/316L Ra < 0.8 µm[4)]	A 7 3
Swagelok VCR screwing ZG2579 PN 64/316L	A 7 4

© Siemens 2020

Selection and ordering data

	Article No.
SITRANS LVL200 Vibrating point level switch, rigid extension design Detects level and material in liquids and slurries. Top mount, with extension options to 6 m (19.69 ft). Ideal for hazardous applications.	**7ML5747-** ■■■■■ - ■■■■■■
Neumo biocontrol size 25 PN 16/316L Ra < 0.8 µm	**A 7 5**
Neumo biocontrol size 50 PN 16/316L Ra < 0.8 µm	**A 7 6**
SÜDMO DN 50 PN 10/316L Ra < 0.8 µm	**A 8 0**
Small flange DN 25 PN 1.5 DIN 28403/316L pol. Ra < 0.8 µm	**A 8 1**
Small flange DN 40 PN 1.5 DIN 28403/316L pol. Ra < 0.8 µm	**A 8 2**
Ingold connection PN 16/316L Ra < 0.8 µm	**A 8 3**
Collar clamp connection DN 33,7 PN 40 Form A, DIN 11864-3/1.4435 (BN2, Ra < 0.8 µm)	**A 8 4**
Collar flange DN 50 PN 16 Form A, DIN 11864-2/316L (Ra < 0.8 µm)	**A 8 5**
Flange DN 25 PN 6 Form C, DIN 2501/316L	**A 8 6**
Flange DN 25 PN 6 Form C, DIN 2501/PFA[4)]	**A 8 7**
Flange DN 25 PN 40 Form C, DIN 2501/316L	**A 8 8**
Flange DN 25 PN 40 Form C, DIN 2501/Alloy C22 (2.4602) plated	**B 0 0**
Flange DN 25 PN 40 Form C, DIN 2501/ECTFE[4)]	**B 0 1**
Flange DN 25 PN 40 Form C, DIN 2501/PFA[4)]	**B 0 2**
Flange DN 25 PN 40 Form D, DIN 2501/316L	**B 0 3**
Flange DN 25 PN 40 Form F, DIN 2501/316L	**B 0 4**
Flange DN 25 PN 40 Form N, DIN 2501/316L	**B 0 5**
Flange DN 25 PN 40 Form N, DIN 2501/Alloy 400 (2.4360) solid	**B 0 7**
Flange DN 25 PN 40 V13, DIN 2501/316L	**B 0 8**
Flange DN 32 PN 40 Form C, DIN 2501/316L	**B 1 0**
Flange DN 32 PN 40 Form C, DIN 2501/ECTFE[4)]	**B 1 1**
Flange DN 40 PN 6 Form C, DIN 2501/316L	**B 1 2**
Flange DN 40 PN 6 Form C, DIN 2501/ECTFE[4)]	**B 1 3**
Flange DN 40 PN 40 Form C, DIN 2501/316L	**B 1 4**
Flange DN 40 PN 40 Form C, DIN 2501/Alloy C22 (2.4602) plated	**B 1 5**
Flange DN 40 PN 40 Form C, DIN 2501/ECTFE[4)]	**B 1 6**
Flange DN 40 PN 40 Form C, DIN 2501/PFA[4)]	**B 1 7**
Flange DN 40 PN 40 Form C, DIN 2501/Enamelled[3)]	**B 1 8**
Flange DN 40 PN 40 Form F, DIN 2501/316L	**B 2 0**
Flange DN 40 PN 40 Form N, DIN 2501/316L	**B 2 1**
Flange DN 40 PN 40 Form E, DIN 2501/316L	**B 2 2**
Flange DN 40 PN 40 V13, DIN 2501/316L	**B 2 3**
Flange DN 50 PN 40 Form C, DIN 2501/316L	**B 2 4**
Flange DN 50 PN 40 Form C, DIN 2501/Alloy C22 (2.4602) plated	**B 2 5**
Flange DN 50 PN 40 Form C, DIN 2501/ECTFE[4)]	**B 2 6**
Flange DN 50 PN 40 Form C, DIN 2501/ECTFE (ZB3108)[4)]	**B 2 7**
Flange DN 50 PN 40 Form C, DIN 2501/PFA[4)]	**B 2 8**
Flange DN 50 PN 40 Form D, DIN 2501/316L	**B 3 0**
Flange DN 50 PN 40 Form D, DIN 2501/Alloy C22 (2.4602)	**B 3 1**
Flange DN 50 PN 40 Form F, DIN 2501/316L	**B 3 2**
Flange DN 50 PN 40 Form N, DIN 2501/316L	**B 3 3**
Flange DN 50 PN 40 Form N, DIN 2501/Alloy C22 (2.4602) solid	**B 3 4**
Flange DN 50 PN 40 Form E, DIN 2501/316L	**B 3 5**
Flange DN 50 PN 40 V13, DIN 2501/316L	**B 3 6**
Flange DN 50 PN 40 R13, DIN 2501/316L	**B 3 7**
Flange DN 50 PN 64 Form F, DIN 2501/316L	**B 3 8**
Flange DN 50 PN 64 Form C, DIN 2501/316L	**B 4 1**
Flange DN 50 PN 64 Form L, DIN 2501/316L	**B 4 2**

	Article No.
SITRANS LVL200 Vibrating point level switch, rigid extension design Detects level and material in liquids and slurries. Top mount, with extension options to 6 m (19.69 ft). Ideal for hazardous applications.	**7ML5747-** ■■■■■ - ■■■■■■
Flange DN 50 PN 100 Form E, DIN 2501/316L	**B 4 3**
Flange DN 50 PN 100 Form L, DIN 2501/316L	**B 4 4**
Flange DN 65 PN 40 Form C, DIN 2501/316L	**B 4 5**
Flange DN 65 PN 40 Form C, DIN 2501/ECTFE[4)]	**B 4 7**
Flange DN 65 PN 40 Form C, DIN 2501/PFA[4)]	**B 4 8**
Flange DN 65 PN 40 Form F, DIN 2501/316L	**B 5 0**
Flange DN 65 PN 64 Form E, DIN 2501/316L	**B 5 1**
Flange DN 80 PN 40 Form C, DIN 2501/316L	**B 5 2**
Flange DN 80 PN 40 Form C, DIN 2501/Alloy C22 (2.4602) plated	**B 5 3**
Flange DN 80 PN 40 Form C, DIN 2501/ECTFE[4)]	**B 5 4**
Flange DN 80 PN 40 Form C, DIN 2501/PFA[4)]	**B 5 5**
Flange DN 80 PN 40 Form F, DIN 2501/316L	**B 5 6**
Flange DN 80 PN 40 Form N, DIN 2501/316L	**B 5 7**
Flange DN 100 PN 16 Form C, DIN 2501/316L	**B 6 0**
Flange DN 100 PN 16 Form C, DIN 2501/Alloy C22 (2.4602) plated	**B 6 1**
Flange DN 100 PN 16 Form C, DIN 2501/ECTFE[4)]	**B 6 2**
Flange DN 100 PN 16 Form C, DIN 2501/PFA[4)]	**B 6 3**
Flange DN 100 PN 16 Form D, DIN 2501/316L	**B 6 4**
Flange DN 100 PN 16 Form F, DIN 2501/316L	**B 6 5**
Flange DN 100 PN 16 Form N, DIN 2501/316L	**B 6 6**
Flange DN 100 PN 40 Form C, DIN 2501/316L	**B 6 7**
Flange DN 100 PN 40 Form C, DIN 2501/ECTFE[4)]	**B 6 8**
Flange DN 100 PN 40 Form C, DIN 2501/PFA[4)]	**B 7 0**
Flange DN 100 PN 40 Form C, DIN 2501/Enamelled[3)]	**B 7 1**
Flange DN 100 PN 40 Form F, DIN 2501/316L	**B 7 2**
Flange DN 100 PN 40 Form N, DIN 2501/316L	**B 7 3**
Flange DN 100 PN 40 V13, DIN 2501/316L	**B 7 4**
Flange DN 100 PN 64 Form E, DIN 2501/316L	**B 7 5**
Flange DN 100 PN 100 Form E, DIN 2501/316L	**B 7 6**
Flange DN 100 PN 100 Form L, DIN 2501/316L	**B 7 7**
Flange DN 125 PN 16 Form F, DIN 2501/316L	**B 7 8**
Flange DN 125 PN 40 Form C, DIN 2501/316L	**B 8 0**
Flange DN 125 PN 40 Form N, DIN 2512/316L	**B 8 1**
Flange DN 150 PN 16 Form C, DIN 2501/316L	**B 8 2**
Flange DN 150 PN 16 Form C, DIN 2501/Alloy C22 (2.4602) plated	**B 8 3**
Flange DN 150 PN 16 Form C, DIN 2501/ECTFE[4)]	**B 8 4**
Flange DN 150 PN 16 Form C, DIN 2501/PFA[4)]	**B 8 5**
Flange DN 150 PN 16 Form D, DIN 2501/316L	**B 8 6**
Flange DN 150 PN 40 Form C, DIN 2501/316L	**B 8 7**
Flange DN 150 PN 40 Form C, DIN 2501/Alloy C22 (2.4602) plated	**B 8 8**

© Siemens 2020

Selection and ordering data

	Article No.
SITRANS LVL200 Vibrating point level switch, rigid extension design Detects level and material in liquids and slurries. Top mount, with extension options to 6 m (19.69 ft). Ideal for hazardous applications.	**7ML5747-** ■■■■■ - ■■■■■■
Flange DN 150 PN 40 Form F, DIN 2501/316L	**C 0 0**
Flange DN 150 PN 40 Form N, DIN 2512/316L	**C 0 1**
Flange DN 200 PN 10 Form C, DIN 2501/ECTFE[4)]	**C 0 2**
Flange DN 200 PN 16 Form C, DIN 2501/316L	**C 0 3**
Flange DN 25 PN 40 Form B1, EN 1092-1/316L	**C 0 4**
Flange DN 25 PN 40 Form B1, EN 1092-1/Alloy C22 (2.4602) plated	**C 0 5**
Flange DN 25 PN 40 Form B1, EN/316L/PFA[4)]	**C 0 6**
Flange DN 25 PN 40 Form B1, EN 1092-1/Enamelled[3]	**C 0 7**
Flange DN 25 PN 40 Form B2, EN 1092-1/316L	**C 0 8**
Flange DN 25 PN 40 Form F, EN 1092-1/316L	**C 1 0**
Flange DN 25 PN 63 Form B1, EN 1092-1/316L	**C 1 1**
Flange DN 25 PN 100 Form B2, EN 1092-1/316L	**C 1 2**
Flange DN 40 PN 40 Form B1, EN/316L	**C 1 3**
Flange DN 40 PN 40 Form B1, EN 1092-1/PFA[4)]	**C 1 4**
Flange DN 40 PN 40 Form B2, EN/316L	**C 1 5**
Flange DN 50 PN 40 Form B1, EN/316L	**C 1 6**
Flange DN 50 PN 40 Form B1, EN 1092-1/Alloy C22 (2.4602) plated	**C 1 7**
Flange DN 50 PN 40 Form B1, EN 1092-1/Alloy 400 (2.4360) ZB2977	**C 1 8**
Flange DN 50 PN 40 Form B1, EN 1092-1/ECTFE[4)]	**C 2 0**
Flange DN 50 PN 40 Form B1, EN/316L/PFA[4)]	**C 2 1**
Flange DN 50 PN 40 Form B1, EN 1092-1/Enamelled[3)]	**C 2 2**
Flange DN 50 PN 40 Form C, EN 1092-1/316L	**C 2 3**
Flange DN 50 PN 40 Form D, EN/316L	**C 2 4**
Flange DN 50 PN 40 Form B2, EN 1092-1/316L	**C 2 6**
Flange DN 50 PN 40 Form E, EN 1092-1/316L	**C 2 7**
Flange DN 80 PN 40 Form B1, EN 1092-1/316L	**C 2 8**
Flange DN 80 PN 40 Form B1, EN 1092-1/Alloy C22 (2.4602) plated	**C 3 0**
Flange DN 80 PN 40 Form B1, EN 1092-1/ECTFE[4)]	**C 3 1**
Flange DN 80 PN 40 Form B1, EN 1092-1/Enamelled[3)]	**C 3 2**
Flange DN 80 PN 40 Form B2, EN 1092-1/316L	**C 3 3**
Flange DN 100 PN 16 Form B1, EN 1092-1/316L	**C 3 4**
Flange DN 100 PN 16 Form B1, EN 1092-1/Alloy C22 (2.4602) plated	**C 3 5**
Flange DN 100 PN 16 Form B1, EN 1092-1/Enamelled[3)]	**C 3 6**
Flange DN 100 PN 40 Form B1, EN 1092-1/316L	**C 3 7**
Flange DN 100 PN 40 Form B1, EN 1092-1/Enamelled[3)]	**C 3 8**
Flange DN 100 PN 40 Form C, EN 1092-1/316L	**C 4 0**
Flange DN 100 PN 63 Form B2, EN 1092-1/316L	**C 4 1**
Flange DN 150 PN 16 Form B1, EN 1092-1/316L	**C 4 2**
Flange DN 150 PN 16 Form B1, EN 1092-1/PFA[4)]	**C 4 3**

	Article No.
SITRANS LVL200 Vibrating point level switch, rigid extension design Detects level and material in liquids and slurries. Top mount, with extension options to 6 m (19.69 ft). Ideal for hazardous applications.	**7ML5747-** ■■■■■ - ■■■■■■
Flange DN 150 PN 40 Form B1, EN 1092-1/316L	**C 4 4**
Flange DN 150 PN 40 Form B1, EN 1092-1/ECTFE[4)]	**C 4 5**
Flange DN 150 PN 40 Form B2, EN 1092-1/316L	**C 4 6**
Flange 1" 150 lb ASME B16.5/316L	**C 4 7**
Flange 1" 150 lb RF, ASME B16.5/Alloy C22 (2.4602) plated	**C 4 8**
Flange 1" 150 lb RF, ASME B16.5/Alloy 400 (2.4360) ZB2977	**C 5 0**
Flange 1" 150 lb RF, ASME B16.5/ECTFE[4)]	**C 5 1**
Flange 1" 150 lb RF, ASME B16.5/PFA[4)]	**C 5 2**
Flange 1" 150 lb RF, ASME B16.5/Enamelled[3)]	**C 5 3**
Flange 1" 300 lb RF, ASME B16.5/316L	**C 5 4**
Flange 1" 300 lb RF, ASME B16.5/ECTFE[4)]	**C 5 5**
Flange 1" 600 lb RF, ASME B16.5/316L	**C 5 6**
Flange 1½" 150 lb RF, ASME B16.5/316L	**C 5 7**
Flange 1½" 150 lb RF, ASME B16.5/Alloy C22 (2.4602) plated	**C 5 8**
Flange 1½" 150 lb RF, ASME B16.5/ECTFE[4)]	**C 6 0**
Flange 1½" 150 lb RF, ASME B16.5/PFA[4)]	**C 6 1**
Flange 1½" 150 lb RF, ASME B16.5 Enamelled[3)]	**C 6 2**
Flange 1½" 150 lb FF, ASME B16.5/ECTFE[4)]	**C 6 3**
Flange 1½" 300 lb RF, ASME B16.5/316L	**C 6 4**
Flange 1½" 300 lb RF, ASME B16.5/Alloy 400 (2.4360) ZB2977	**C 6 5**
Flange 1½" 300 lb RF, ASME B16.5/ECTFE[4)]	**C 6 6**
Flange 1½" 600 lb RF, ASME B16.5/316L	**C 6 7**
Flange 2" 150 lb RF, ASME B16.5/316L	**C 6 8**
Flange 2" 150 lb RF, ASME B16.5/Alloy C22 (2.4602) plated	**C 7 0**
Flange 2" 150 lb RF, ASME B16.5/Alloy 400 (2.4360) ZB2977	**C 7 1**
Flange 2" 150 lb RF, ASME B16.5/ECTFE[4)]	**C 7 2**
Flange 2" 150 lb RF, ASME B16.5/PFA[4)]	**C 7 3**
Flange 2" 150 lb RF, ASME B16.5/Enamelled[3)]	**C 7 4**
Flange 2" 150 lb FF, ASME B16.5/316L	**C 7 5**
Flange 2" 150 lb FF, ASME B16.5/ECTFE[4)]	**C 7 6**
Flange 2" 150 lb SG (small groove), ASME B16.5/316L	**C 7 7**
Flange 2" 300 lb RF, ASME B16.5/316L	**C 7 8**
Flange 2" 300 lb RF, ASME B16.5/Alloy C22 (2.4602) plated	**C 8 0**
Flange 2" 300 lb RF, ASME B16.5/ECTFE[4)]	**C 8 2**
Flange 2" 300 lb RF, ASME B16.5/PFA[4)]	**C 8 3**
Flange 2" 300 lb RJF, ASME B16.5/316L	**C 8 5**
Flange 2" 300 lb ST, ASME B16.5/316L	**C 8 6**
Flange 2" 300 lb LG (large groove), ASME B16.5/316L	**C 8 7**
Flange 2" 300 lb LT, ASME B16.5/316L	**C 8 8**
Flange 2" 600 lb RF, ASME B16.5/316L	**D 0 0**
Flange 2" 600 lb RF, ASME B16.5/Alloy 400 (2.4360) ZB2977	**D 0 1**
Flange 2" 600 lb RF, ASME B16.5/ECTFE[4)]	**D 0 2**
Flange 2" 600 lb RJF, ASME B16.5/316L	**D 0 3**
Flange 2" 600 lb LG, ASME B16.5/316L	**D 0 4**
Flange 2" 900 lb RJF, ASME B16.5/316L	**D 0 5**
Flange 2½" 150 lb RF, ASME B16.5/316L	**D 0 6**
Flange 2½" 300 lb RF, ASME B16.5/316L	**D 0 7**
Flange 3" 150 lb RF, ASME B16.5/316L	**D 0 8**
Flange 3" 150 lb RF, ASME B16.5/Alloy C22 (2.4602) plated	**D 1 0**
Flange 3" 150 lb RF, ASME B16.5/Alloy 400 (2.4360) ZB2977	**D 1 1**
Flange 3" 150 lb RF, ASME B16.5/ECTFE[4)]	**D 1 2**
Flange 3" 150 lb RF, ASME B16.5/PFA[4)]	**D 1 3**

© Siemens 2020

Selection and ordering data

	Article No. 7ML5747-
SITRANS LVL200 Vibrating point level switch, rigid extension design Detects level and material in liquids and slurries. Top mount, with extension options to 6 m (19.69 ft). Ideal for hazardous applications.	
Flange 3" 150 lb RF, ASME B16.5/Enamelled[3]	D 1 4
Flange 3" 150 lb FF, ASME B16.5/316L	D 1 5
Flange 3" 150 lb FF, ASME B16.5/ECTFE[4]	D 1 6
Flange 3" 150 lb FF, ASME B16.5/PFA[4]	D 1 7
Flange 3" 300 lb RF, ASME B16.5/316L	D 1 8
Flange 3" 300 lb RF, ASME B16.5/Alloy C22 (2.4602) plated	D 2 0
Flange 3" 300 lb RF, ASME B16.5/ECTFE[4]	D 2 1
Flange 3" 300 lb RF, ASME B16.5/PFA[4]	D 2 2
Flange 3" 300 lb RF, ASME B16.5/Enamelled[3]	D 2 3
Flange 3" 600 lb RF, ASME B16.5/316L	D 2 4
Flange 3½" 150 lb RF, ASME B16.5/316L	D 2 5
Flange 3½" 150 lb RF, ASME B16.5/ECTFE[4]	D 2 6
Flange 4" 150 lb RF, ASME B16.5/316L	D 2 7
Flange 4" 150 lb RF, ASME B16.5/Alloy C22 (2.4602) plated	D 2 8
Flange 4" 150 lb RF, ASME B16.5/ECTFE[4]	D 3 0
Flange 4" 150 lb RF, ASME B16.5/PFA[4]	D 3 1
Flange 4" 150 lb RF, ASME B16.5/Enamelled[3]	D 3 2
Flange 4" 150 lb LT, ASME B16.5/316L	D 3 3
Flange 4" 300 lb RF, ASME B16.5/316L	D 3 4
Flange 4" 300 lb RF, ASME B16.5/Alloy C22 (2.4602) plated	D 3 5
Flange 4" 300 lb RF, ASME B16.5/ECTFE[4]	D 3 6
Flange 4" 300 lb RJF, ASME B16.5/316L	D 3 7
Flange 4" 300 lb LG, ASME B16.5/316L	D 3 8
Flange 4" 300 lb LT, ASME B16.5/316L	D 4 0
Flange 4" 600 lb RF, ASME B16.5/316L	D 4 1
Flange 4" 600 lb RJF, ASME B16.5/316L	D 4 2
Flange 5" 150 lb RF, ASME B16.5/316L	D 4 3
Flange 6" 150 lb RF, ASME B16.5/316L	D 4 4
Flange 6" 150 lb RF, ASME B16.5/Alloy C22 (2.4602) plated	D 4 5
Flange 6" 150 lb RF, ASME B16.5/ECTFE[4]	D 4 6
Flange 6" 150 lb RF, ASME B16.5/PFA[4]	D 4 7
Flange 6" 150 lb RJF, ASME B16.5/316L	D 4 8
Flange 6" 300 lb RF, ASME B16.5/316L	D 5 0
Flange 8" 150 lb RF, ASME B16.5/316L	D 5 1
Flange 8" 150 lb RF, ASME B16.5/ECTFE[4]	D 5 2
Flange 1" BS.10 Table E/316L	D 5 3
Flange 1" BS.10 Table E/PFA[4]	D 5 4
Flange 1½" BS.10 Table E/316L	D 5 5
Flange 3½" BS.10 Table E/316L	D 5 6
Flange 4" BS.10 Table E/ECTFE[4]	D 5 7
Flange DN 40 10K, JIS/316L	D 5 8
Flange DN 50 10K, JIS/316L	D 6 0
Flange DN 80 10K, JIS/316L	D 6 1
Flange DN 100 10K, JIS/316L	D 6 2
Thread R1 PN 64, EN10226-1/316L[11]	D 6 5
Flange 2" 900 lb RF, ASME B16.5/316L	D 7 0
Flange 4" 150 lb RF, ASME B16.5/Alloy C22 (2.4602) solid	D 7 1
Adapter/Process temperature	
Without adapter/-50 ... +150 °C	1
With adapter/-50 ... +200 °C[13]	2
With adapter/-50 ... +250 °C	3
With gas-tight leadthrough/-50 ... +150 °C	4
With gas-tight leadthrough/-50 ... +250 °C	5
Housing/Cable entry	
Aluminum IP66/IP67/M20 x 1.5	A
Aluminum IP66/IP67/½" NPT	B
316L stainless steel (electropolished) IP66/IP67/M20 x 1.5	C
316L stainless steel (electropolished) IP66/IP67/½" NPT	D

	Article No. 7ML5747-
SITRANS LVL200 Vibrating point level switch, rigid extension design Detects level and material in liquids and slurries. Top mount, with extension options to 6 m (19.69 ft). Ideal for hazardous applications.	
Plastic single chamber IP66/IP67/M20 x 1.5	E
Plastic single chamber IP66/IP67/½" NPT	F
Stainless steel chamber (precision casting) IP66/IP67/M20 x 1.5	G
Stainless steel chamber (precision casting) IP66/IP67/½" NPT	H
Aluminum IP66/IP67/M20 x 1.5 Special HARTING plug HAN 7D (bent) according to Tier One (ZB7555)	V
NOTE: **When selecting a Rigid Extension option, extension coating must match the process connection coating and the material and surface roughness type.**	
Rigid Extension 316L	
80 ... 500 mm	A 0
501 ... 1 000 mm	A 1
1 001 ... 1 500 mm	A 2
1 501 ... 2 000 mm	A 3
2 001 ... 2 500 mm	A 4
2 501 ... 3 000 mm	A 5
3 001 ... 3 500 mm	A 6
3 501 ... 4 000 mm	A 7
Rigid Extension ECTFE coated	
80 ... 500 mm	B 0
501 ... 1 000 mm	B 1
1 001 ... 1 500 mm	B 2
1 501 ... 2 000 mm	B 3
2 001 ... 2 500 mm	B 4
2 501 ... 3 000 mm	B 5
Rigid Extension PFA coated	
80 ... 500 mm	C 0
501 ... 1 000 mm	C 1
1 001 ... 1 500 mm	C 2
1 501 ... 2 000 mm	C 3
2 001 ... 2 500 mm	C 4
2 501 ... 3 000 mm	C 5
3 001 ... 3 500 mm	C 6
3 501 ... 4 000 mm	C 7
Rigid Extension 316L Ra ≤ 0.8 µm	
80 ... 500 mm	D 0
501 ... 1 000 mm	D 1
1 001 ... 1 500 mm	D 2
1 501 ... 2 000 mm	D 3
2 001 ... 2 500 mm	D 4
2 501 ... 3 000 mm	D 5
3 001 ... 3 500 mm	D 6
3 501 ... 4 000 mm	D 7
Rigid Extension 316L Ra ≤ 0.3 µm	
80 ... 500 mm	E 0
501 ... 1 000 mm	E 1
1 001 ... 1 500 mm	E 2
1 501 ... 2 000 mm	E 3
2 001 ... 2 500 mm	E 4
2 501 ... 3 000 mm	E 5
3 001 ... 3 500 mm	E 6
3 501 ... 4 000 mm	E 7
Rigid Extension Enamelled version	
80 ... 250 mm	F 0
251 ... 500 mm	F 1
501 ... 750 mm	F 2
751 ... 1 000 mm	F 3
1 001 ... 1 250 mm	F 4
1 251 ... 1 500 mm	F 5

© Siemens 2020

Selection and ordering data

	Article No.
SITRANS LVL200 Vibrating point level switch, rigid extension design Detects level and material in liquids and slurries. Top mount, with extension options to 6 m (19.69 ft). Ideal for hazardous applications.	**7ML5747-** ■■■■■ - ■■■■■■■
Rigid Extension Alloy C22 (2.4602)	
80 ... 500 mm	**G 0**
501 ... 1 000 mm	**G 1**
1 001 ... 1 500 mm	**G 2**
1 501 ... 2 000 mm	**G 3**
2 001 ... 2 500 mm	**G 4**
2 501 ... 3 000 mm	**G 5**
3 001 ... 3 500 mm	**G 6**
3 501 ... 4 000 mm	**G 7**
Rigid Extension Alloy 400 (2.4360)	
80 ... 500 mm	**H 0**
501 ... 1 000 mm	**H 1**
1 001 ... 1 500 mm	**H 2**
1 501 ... 2 000 mm	**H 3**
2 001 ... 2 500 mm	**H 4**
2 501 ... 3 000 mm	**H 5**

Further designs Please add "**-Z**" to Article No. and specify Order code(s).	Order code
Switching status indication with colors red-green[12]	**A21**
Cleaning including Certificate (oil, grease, and silicone free)	**W01**
Enter the total insertion length in plain text description, max. 4 000 mm (157.48 inch)	**Y01**
Identification label (measurement loop) stainless steel: max. 40 characters, add in plain text. To add more than one line, use a coma "," for line break.	**Y17**
Identification label (measurement loop) foil: max. 40 characters add in plain text. To add more than one line, use a coma "," for line break.	**Y18**
NACE0175 to 3.1 Material Certificate for material (EN 10204 NACE MR 0175)[8] Note: not available with Process connection and Rigid extension coatings PFA, ECTFE, and Enamel. NACE not available with Hygienic process connections.	**D07**
Material Inspection certificate 3.1 of EN 10204	**C05**
2.2-Factory certificate for material (EN 10204)[8]	**C15**
Functional Safety (SIL 2). Device suitable for use in accordance with IEC 61508 and IEC 61511[8]	**C20**
Dye penetration test, results confirmed via a 3.1 certificate/instrument (EN 10204)[8]	**C13**
X-ray test + 3.1 certificate/instrument[8]	**C14**
Positive material identification test + 3.1 certificate/instrument[8]	**C16**
Roughness test + 3.1 certificate/instrument[8]	**C18**
3.1-Inspection Certificate for instrument with test data (EN 10204)	**C25**
Quality and test plan	**C26**
Pressure test + 3.1 certificate/instrument[8]	**C31**
Helium leak test + 3.1 certificate/instrument[8]	**C32**
Ferrite measuring accuracy to DIN 32514-1 + 3.1 certificate/instrument[8]	**C60**
Pressure test according to Norsok + 3.1 certificate/instrument[8]	**C61**
Operating Instructions All literature is available to download for free, in a range of languages, at	

http://www.siemens.com/processinstrumentation/documentation

Spare Parts and Accessories	Article No.
Electronics module SITRANS LVL200 Relay	**7ML1830-1NC**
Electronics module SITRANS LVL200 Contactless	**7ML1930-6AA**
NAMUR spare electronics module	**A5E35817107**
SITRANS SCSC single channel signal conditioner and remote test	**7ML5760-.....-....**
SITRANS TCSC two channel signal conditioner and remote test	**7ML5761-.....-....**
Lock fitting, unpressurized, G1" A/316L	**7ML1930-1DQ**
Lock fitting, unpressurized, 1" NPT/316L	**7ML1930-1DR**
Lock fitting, unpressurized, G1 ... 1/2" A/316L	**7ML1930-1DS**
Lock fitting, unpressurized, 1 ... 1/2" NPT/316L	**7ML1930-1DT**
Lock fitting, -1 ... 16 bar, G1" A/316L	**7ML1930-1DU**
Lock fitting, -1 ... 16 bar, 1" NPT/316L	**7ML1930-1DV**
Lock fitting, -1 ... 16 bar, G1 1/2" A/316L	**7ML1930-1DW**
Lock fitting, -1 ... 16 bar, 1 1/2" NPT/316L	**7ML1930-1DX**
Lock fitting, -1 ... 64 bar, G1" A/316L	**7ML1930-1EA**
Lock fitting, -1 ... 64 bar, 1" NPT/316L	**7ML1930-1EB**
Lock fitting, -1 ... 64 bar, G1 1/2" A/316L	**7ML1930-1EC**
Lock fitting, -1 ... 64 bar, 1 1/2" NPT/316L	**7ML1930-1ED**

1) Available only with Adapter/Process temperature options 1, 3, 4, and 5.
2) Available only with Housing/Cable entry option B.
3) Available only with Adapter/Process temperature options 1, 2, and 4.
4) Not available with Adapter/Process temperature options 2, 3, and 5.
5) Not available with Adapter/Process temperature options 2, 4, and 5.
6) Available only with Electronics options 4 and 6.
7) Available only with rigid extension options less than 3 001 mm.
8) Listed Certificates are not available with all configurations please contact factory for more information.
9) Not available with Housing/Protection/Cable option V.
10) Not available with PFA, ECTFE, and enamelled coating options.
11) Available only with some 316L extensions.
12) Available only with relay electronic options and non-hazardous Approval options.
13) Available only with Enamelled Process connection/Material options.
14) Not available with Approval options C, E, G, H, L, N, V, and W.
15) Not available with Approval options C, E, G, H, N, and V.
16) Only available with Aluminum Housing/Protection/Cable options and certain glands.
17) Not available with Stainless Steel Electropolish Housing/Protection/Cable options and certain glands.
18) Not available with Plastic or Stainless Steel Electropolish Housing/Protection/Cable options and certain glands.
19) Not available with Housing/Protection/Cable options D and V.
20) Not available with Housing/Protection/Cable options A, E, G, and V.
21) Not available with some Housing/Protection/Cable gland options.
22) Not available with Housing/Protection/Cable options A, C, and V.
23) Not available with Plastic Housing/Protection/Cable options.
24) Available only with Electronic option 4.
25) Not available with FM approval options.

© Siemens 2020

Selection and ordering data

	Article No.
SITRANS LVL200 Vibrating point level switch, high temperature and pressure design ↗	**7ML5748-** ■ ■ ■ ■ ■ - ■ ■ ■ ■
Detects level and material in liquids and slurries in extreme environments. Extension options to 3 m (9.84 ft).	
↗ Click on the Article No. for the online configuration in the PIA Life Cycle Portal.	
Version/Material	
Compact version/Inconel 718 (2.4668)[1)2)]	**1**
With tube extension/316L and Inconel 718 (2.4668)[1)3)]	**2**
With tube extension/Alloy C22 (2.4602) and Inconel 718 (2.4668)[4)]	**3**
Approvals	
Without approvals	**A**
Ship approval	**B**
Overfill protection WHG[7)]	**C**
ATEX II ½G, 2G Ex d IIC T6[6)9)]	**D**
ATEX II 1G, ½G, 2G Ex ia IIC T6[5)9)]	**F**
ATEX II 1G, ½G, 2G Ex ia IIC T6 + ship approval[5)9)10)]	**G**
ATEX II 1G, ½G, 2G Ex ia IIC T6 + Overfill protection (WHG)[6)7)9)]	**H**
ATEX II ½G, 2G Ex d IIC T6 + Overfill protection (WHG)[6)7)9)]	**J**
FM (NI) Class I, Div. 2, Groups A, B, C, D T6 ... T1[9)11)]	**N**
FM (NI) Class I, Div. 2, Groups A, B, C, D T6 ... T1 + Ship approval[6)9)]	**P**
FM (IS) Class I, Div. 1, Groups A, B, C, D Zone 0, 0/1, 1, AEx ia IIC T6 ... T1 Ga, Ga/Gb, Gb[5)9)12)]	**Q**
FM (XP) Class I, Div. 1, Groups A, B, C, D T6 ... T1, Zone 0/1, 1, AEx d IIC T6 ... T1 Ga/Gb, Gb[6)9)]	**R**
FM (XP) Class I, Div. 1, Groups A, B, C, D T6 ... T1, Zone 0/1, 1, AEx d IIC T6 ... T1 Ga/Gb, Gb + Ship approval[6)9)]	**S**
IEC Ex d IIC T6[6)9)]	**E**
IEC Ex ia IIC T6 + Ship approval[5)9)10)]	**U**
IEC Ex ia IIC T6[5)9)]	**T**
$_{C}CSA_{US}$ (NI) Class I, Div. 2, Groups A, B , C, D, (DIP) Class II, III, Div. 1, Groups E, F, G[6)9)]	**V**
$_{C}CSA_{US}$ (NI) Class I, Div. 2, Groups A, B, C, D, (DIP) Class II, III, Div. 1, Groups E, F, G + Ship approval[6)9)]	**W**
$_{C}CSA_{US}$ (IS) Class I, II, III, Div. 1, Groups A, B, C, D, E, F, G[5)9)12)]	**X**
$_{C}CSA_{US}$ (IS) Class I, II, III, Div. 1, Groups A, B, C, D, E, F, G + Ship approval[5)9)13)]	**Y**
$_{C}CSA_{US}$ (XP) Class I, II, III, Div. 1, Groups A, B, C, D, E, F, G[6)9)]	**K**
$_{C}CSA_{US}$ (XP) Class I, II, III, Div. 1, Groups A, B, C, D, E, F, G + Ship approval[6)9)]	**L**
Process connection	
Thread G1 PN 100, DIN 3852-A/316L	**A 0**
Thread G1 PN 160, DIN 3852-A/Inconel 718 (2.4668)	**A 1**
Thread 1" NPT PN 100, ASME B1.20.1/316L	**A 2**
Thread 1" NPT PN 160, ASME B1.20.1/Inconel 718 (2.4668)	**A 3**
Flange DN 50 PN 40 Form C, DIN 2501/316/316	**A 4**
Flange DN 50 PN 40 Form C, DIN 2501/316/316L, with Alloy C22 (2.4602) coating	**A 5**
Flange DN 50 PN 40 Form N, DIN 2501/316/316L	**A 6**
Flange DN 50 PN 40 Form V13, DIN 2501/316/316L	**A 7**
Flange DN 50 PN 40 Form V13, DIN 2501/Alloy C22 (2.4602) solid	**A 8**
Flange DN 50 PN 40 Form V13, DIN 2501/316/316L, with Alloy C22 (2.4602) coating	**B 0**

	Article No.
SITRANS LVL200 Vibrating point level switch, high temperature and pressure design	**7ML5748-** ■ ■ ■ ■ ■ - ■ ■ ■ ■
Detects level and material in liquids and slurries in extreme environments. Extension options to 3 m (9.84 ft).	
Flange DN 50 PN 64 Form E, DIN 2501/316/316L	**B 1**
Flange DN 50 PN 100 Form C, DIN 2501/316/316L	**B 2**
Flange DN 50 PN 100 Form F, DIN 2501/316/316L	**B 3**
Flange DN 50 PN 100 Form V13, DIN 2501/316/316L	**B 4**
Flange DN 50 PN 160 Form C, DIN 2501/316/316L	**B 5**
Flange DN 50 PN 160 Form F, DIN 2501/316/316L	**B 6**
Flange DN 65 PN 16 Form C, DIN 2501/316/316L	**B 7**
Flange DN 65 PN 40 Form C, DIN 2501/316/316L	**B 8**
Flange DN 65 PN 100 Form C, DIN 2501/316/316L	**C 0**
Flange DN 80 PN 40 Form C, DIN 2501/316/316L	**C 1**
Flange DN 80 PN 100 Form C, DIN 2501/316/316L	**C 2**
Flange DN 80 PN 160 Form F, DIN 2501/316/316L	**C 3**
Flange DN 80 PN 160 Form L, DIN 2501/316/316L	**C 4**
Flange DN 80 PN 250 Form L, DIN 2501/316/316L	**C 5**
Flange DN 80 PN 250 Form L, DIN 2501/Alloy C22 (2.4602) solid	**C 6**
Flange DN 100 PN 16 Form C, DIN 2501/316/316L	**C 7**
Flange DN 100 PN 40 Form C, DIN 2501/316/316L	**C 8**
Flange DN 100 PN 100 Form E, DIN 2501/316/316L	**D 0**
Flange DN 100 PN 160 Form L, DIN 2501/316/316L	**D 1**
Flange DN 125 PN 16 Form C, DIN 2501/316/316L	**D 2**
Flange DN 125 PN 40 Form C, DIN 2501/316/316L	**D 3**
Flange DN 150 PN 16 Form C, DIN 2501/316/316L	**D 4**
Flange DN 150 PN 16 Form C, DIN 2501/316/316L, with Alloy C22 (2.4602) coating	**D 5**
Flange DN 150 PN 40 Form C, DIN 2501/316/316L	**D 6**
Flange DN 150 PN 160 Form L, DIN 2501/316/316L	**D 7**
Flange DN 200 PN 16 Form C, DIN 2501/316/316L	**D 8**
Flange DN 200 PN 64 Form C, DIN 2501/316/316L	**E 0**
Flange DN 250 PN 16 Form C, DIN 2501/316/316L	**E 1**
Flange DN 250 PN 64 Form C, DIN 2501/316/316L	**E 2**
Flange DN 50 PN 40 Form B1, EN 1092-1/1.4435	**E 3**
Flange DN 50 PN 40 Form B1, EN 1092-1/316/316L	**E 4**
Flange DN 50 PN 40 Form B1, EN 1092-1/316/316L, with Alloy C22 (2.4602) coating	**E 5**
Flange DN 50 PN 40 Form B2, EN 1092-1/316/316L	**E 6**
Flange DN 50 PN 40 Form C, EN 1092-1/316/316L	**E 7**
Flange DN 50 PN 40 Form D, EN 1092-1/316/316L	**E 8**

© Siemens 2020

Selection and ordering data

	Article No.
SITRANS LVL200 Vibrating point level switch, high temperature and pressure design Detects level and material in liquids and slurries in extreme environments. Extension options to 3 m (9.84 ft).	**7ML5748-** ■■■■■ - ■■■■
Flange DN 50 PN 40 Form E, EN 1092-1/316/316L	**F 0**
Flange DN 50 PN 63 Form B2, EN 1092-1/316/316L	**F 1**
Flange DN 50 PN 63 Form B2, EN 1092-1/316/316L, with Alloy C22 (2.4602) coating	**F 2**
Flange DN 50 PN 63 Form C, EN 1092-1/316/316L	**F 3**
Flange DN 50 PN 63 Form D, EN 1092-1/316/316L	**F 4**
Flange DN 50 PN 100 Form B1, EN 1092-01/316/316L	**F 5**
Flange DN 50 PN 100 Form C, EN 1092-1/316/316L	**F 6**
Flange DN 50 PN 160 Form B1, EN 1092-1/316/316L	**F 7**
Flange DN 50 PN 160 Form B2, EN 1092-1/316/316L	**F 8**
Flange DN 50 PN 250 Form B1, EN 1092-1/316/316L	**G 0**
Flange DN 50 PN 250 Form B2, EN 1092-1/316/316L	**G 1**
Flange DN 65 PN 40 Form B1, EN 1092-1/316/316L	**G 2**
Flange DN 65 PN 63 Form C, EN 1092-1/316/316L	**G 3**
Flange DN 80 PN 40 Form B1, EN 1092-1/316/316L	**G 4**
Flange DN 80 PN 40 Form B2, EN 1092-1/316/316L	**G 5**
Flange DN 80 PN 40 Form C, EN 1092-1/316/316L	**G 6**
Flange DN 80 PN 40 Form D, EN 1092-1/316/316L	**G 7**
Flange DN 80 PN 63 Form B2, EN 1092-1/316/316L	**G 8**
Flange DN 80 PN 160 Form B2, EN 1092-1/316/316L	**H 0**
Flange DN 80 PN 250 Form B1, EN 1092-1/316/316L	**H 1**
Flange DN 100 PN 16 Form D, EN 1092-1/316/316L	**H 2**
Flange DN 100 PN 40 Form B1, EN 1092-1/316/316L	**H 3**
Flange DN 100 PN 40 Form B2, EN 1092-1/316/316L	**H 4**
Flange DN 100 PN 40 Form C, EN 1092-1/316/316L	**H 5**
Flange DN 100 PN 40 Form D, EN 1092-1/316/316L	**H 6**
Flange DN 100 PN 160 Form B2, EN 1092-1/316/316L	**H 7**
Flange DN 125 PN 63 Form C, EN 1092-1/316/316L	**H 8**
Flange DN 125 PN 160 Form B2, EN 1092-1/316/316L	**K 0**
Flange DN 150 PN 40 Form B1, EN 1092-1/316/316L	**K 1**
Flange DN 150 PN 40 Form C, EN 1092-1/316/316L	**K 2**
Flange DN 150 PN 40 Form D, EN 1092-1/316/316L	**K 3**
Flange DN 40 PN 100, GOST 12815-80.7/316/316L	**K 4**
Flange DN 50 PN 100, GOST 12815-80.7/316/316L	**K 5**
Flange DN 80 PN 100, GOST 12815-80.7/316/316L	**K 6**
Flange DN 100 PN 100, GOST 12815-80.7/316/316L	**K 7**

	Article No.
SITRANS LVL200 Vibrating point level switch, high temperature and pressure design Detects level and material in liquids and slurries in extreme environments. Extension options to 3 m (9.84 ft).	**7ML5748-** ■■■■■ - ■■■■
Flange 1½" 150 lb RJF, ASME B16.5/316/316L	**K 8**
Flange 1½" 300 lb RJF, ASME B16.5/316/316L	**L 1**
Flange 1½" 1 500 lb RJF, ASME B16.5/316/316L	**L 2**
Flange 2" 150 lb RF, ASME B16.5/316/316L	**L 3**
Flange 2" 150 lb RF, ASME B16.5/Alloy C22 (2.4602) solid	**L 4**
Flange 2" 300 lb RF, ASME B16.5/316/316L	**L 5**
Flange 2" 300 lb RF, ASME B16.5/Alloy C22 (2.4602) solid	**L 6**
Flange 2" 300 lb RF, ASME B16.5/316/316L, with Alloy C22 (2.4602) coating	**L 7**
Flange 2" 300 lb ST (small tongue), ASME B16.5/316/316L	**L 8**
Flange 2" 300 lb RJF, ASME B16.5/316/316L	**M 1**
Flange 2" 300 lb LM (large male), ASME B16.5/316/316L	**M 2**
Flange 2" 300 lb SG, ASME B16.5/316/316L	**M 3**
Flange 2" 300 lb LG, ASME B16.5/316/316L	**M 4**
Flange 2" 600 lb RF, ASME B16.5/316/316L	**M 5**
Flange 2" 600 lb RF, ASME B16.5/316/316L, with Alloy C22 (2.4602) coating	**M 6**
Flange 2" 600 lb RJF, ASME B16.5/316/316L	**M 7**
Flange 2" 900 lb RF, ASME B16.5/316/316L	**M 8**
Flange 2" 900 lb RJF, ASME B16.5/316/316L	**N 1**
Flange 2" 1 500 lb RF, ASME B16.5/316/16L	**N 2**
Flange 2" 1 500 lb RJF, ASME B16.5/316/316L	**N 3**
Flange 2" 1 500 lb LT, ASME B16.5/Alloy C22 (2.4602) solid	**N 4**
Flange 2" 1 500 lb LM, ASME B16.5/316/316L	**N 5**
Flange 2" 2 500 lb RJF, ASME B16.5/316/316L	**N 6**
Flange 2½" 150 lb RF, ASME B16.5/316/316L	**N 7**
Flange 2½" 300 lb RF, ASME B16.5/316/316L	**N 8**
Flange 2½" 600 lb RF, ASME B16.5/316/316L	**P 1**
Flange 2½" 900 lb RF, ASME B16.5/316/316L	**P 2**
Flange 2½" 2 500 lb RJF, ASME B16.5/316/316L	**P 3**
Flange 3" 150 lb RF, ASME B16.5/316/316L	**P 4**
Flange 3" 150 lb RF, ASME B16.5/Alloy C22 (2.4602) solid	**P 5**
Flange 3" 300 lb RF, ASME B16.5/316/316L	**P 6**
Flange 3" 300 lb RJF, ASME B16.5/316/316L	**P 7**
Flange 3" 300 lb LT, ASME B16.5/316/316L	**P 8**
Flange 3" 600 lb RF, ASME B16.5/316/316L	**R 1**
Flange 3" 600 lb RF, ASME B16.5/Alloy C22 (2.4602) solid	**R 2**
Flange 3" 600 lb RF, ASME B16.5/316/316L, with Alloy C22 (2.4602) coating	**R 3**
Flange 3" 600 lb RJF, ASME B16.5/316/316L	**R 4**
Flange 3" 900 lb RF, ASME B16.5/316/316L	**R 5**
Flange 3" 900 lb RJF, ASME B16.5/316/316L	**R 6**
Flange 3" 1 500 lb RF, ASME B16.5/316/316L	**R 7**
Flange 3" 1 500 lb RJF, ASME B16.5/316/316L	**R 8**
Flange 3" 2 500 lb RF, ASME B16.5/316/316L	**S 1**
Flange 3" 2 500 lb RJF, ASME B16.5/316/316L	**S 2**
Flange 4" 150 lb RF, ASME B16.5/316/316L	**S 3**
Flange 4" 150 lb RF, ASME B16.5/Alloy C22 (2.4602) solid	**S 4**
Flange 4" 150 lb RJF, ASME B16.5/316/316L	**S 5**
Flange 4" 300 lb RF, ASME B16.5/316/316L	**S 6**
Flange 4" 300 lb RF, ASME B16.5/Alloy C22 (2.4602) solid	**S 7**

© Siemens 2020

Selection and ordering data

	Article No.
SITRANS LVL200 Vibrating point level switch, high temperature and pressure design	**7ML5748-** ■■■■■ - ■■■■
Detects level and material in liquids and slurries in extreme environments. Extension options to 3 m (9.84 ft).	
Flange 4" 300 lb LT, ASME B16.5/316/316L	**S 8**
Flange 4" 600 lb RF, ASME B16.5/316/316L	**T 1**
Flange 4" 600 lb RF, ASME B16.5/Alloy C22 (2.4602) solid	**T 2**
Flange 4" 600 lb RJF, ASME B16.5/316/316L	**T 3**
Flange 4" 900 lb RF, ASME B16.5/316/316L	**T 4**
Flange 4" 900 lb RJF, ASME B16.5/316/316L	**T 5**
Flange 4" 900 lb LT, ASME B16.5/316/316L	**T 6**
Flange 4" 1 500 lb RF, ASME B16.5/316/316L	**T 7**
Flange 4" 1 500 lb RJF, ASME B16.5/316/316L	**T 8**
Flange 4" 1 500 lb LT, ASME B16.5/316/316L	**U 1**
Flange 5" 150 lb RF, ASME B16.5/316/316L	**U 2**
Flange 5" 300 lb RF, ASME B16.5/316/316L	**U 3**
Flange 5" 600 lb RJF, ASME B16.5/316/316L	**U 4**
Flange 6" 150 lb RF, ASME B16.5/316/316L	**U 5**
Flange 6" 300 lb RF, ASME B16.5/316/316L	**U 6**
Flange 6" 300 lb LT, ASME B16.5/316/316L	**U 7**
Flange DN 50 30K RF, JIS/316/316L	**U 8**
Flange DN 50 40K RF, JIS/316/316L	**V 1**
Flange DN 65 40 K RF, JIS/316/316L	**V 2**
Mobrey flange PN 16 Form A/316/316L	**V 3**
Mobrey flange PN 16 Form E/316/316L	**V 4**
Thread R1 PN 160, EN 10226-1/Inconel 718 (2.4668)	**W 1**
Thread R1 PN 100, EN 10226-1/316L	**W 2**
Gas-tight seal/Process temperature	
With gas-tight seal/-196 ... +450 °C (-321 ... +842 °F)	**1**
Without/-196 ... +450 °C (-321 ... +842 °F)	**2**
Electronics	
Relay (2 x SPDT) 20 .. 72 V DC/20 ... 253 V AC (5A)	**1**
Transistor (NPN/PNP) 9.6 ... 55 V DC	**2**
Two-wire (8/16 mA) 9.6 ... 35 V DC	**3**
Relay (2 x SPDT) 20 ... 72 V DC/20 ... 253 V AC (5A), with SIL qualification	**4**
Transistor (NPN/PNP) 9.6 ... 55 V DC, with SIL qualification	**5**
Two-wire (8/16 mA) 9.6 ... 35 V DC, with SIL qualification	**6**

	Article No.
SITRANS LVL200 Vibrating point level switch, high temperature and pressure design	**7ML5748-** ■■■■■ - ■■■■
Detects level and material in liquids and slurries in extreme environments. Extension options to 3 m (9.84 ft).	
Housing/Cable entry	
Plastic single chamber/IP66/IP67/M20 x 1.5 gland PA black (ø5 ... 9 mm)	**A**
Plastic single chamber/IP66/IP67/½" NPT gland PA black (ø5 ... 9 mm)	**B**
Aluminum IP66/IP67/M20 x 1.5 gland PA black (ø5 ... 9 mm)	**C**
Aluminum IP66/IP67/½" NPT gland PA black (ø5 ... 9 mm)	**D**
Stainless steel single chamber (precision casting)/ IP66/IP67/M20 x 1.5	**E**
Stainless steel single chamber (precision casting)/ IP66/IP67/½" NPT gland PA black (ø5 ... 9 mm)	**F**
Stainless steel single chamber (electropolished)/ IP66/IP67/M20 x 1.5 gland PA black (ø5 ... 9 mm)	**G**
Stainless steel single chamber (electropolished)/ IP66/IP67/½" NPT gland PA black (ø5 ... 9 mm)	**H**
Aluminium IP66/IP67/M20 x 1.5 blind plug	**J**
Aluminium IP66/IP67/½" NPT blind plug	**K**
Stainless steel single chamber (precision casting)/IP66/IP67/M20 x 1.5 blind plug	**L**
Stainless steel single chamber (precision casting)/ IP66/IP67/½" NPT blind plug	**M**
Stainless steel single chamber (electropolished)/ IP66/IP67/M20 x 1.5 blind plug	**N**
Stainless steel single chamber (electropolished)/ IP66/IP67/½" NPT blind plug	**P**
Rigid Extension 316L	
200 ... 500 mm	**A 0**
501 ... 1 000 mm	**A 1**
1 001 ... 1 500 mm	**A 2**
1 501 ... 2 000 mm	**A 3**
2 001 ... 2 500 mm	**A 4**
2 501 ... 3 000 mm	**A 5**
Rigid Extension Alloy C22	
200 ... 500 mm	**B 0**
501 ... 1 000 mm	**B 1**
1 001 ... 1 500 mm	**B 2**
1 501 ... 2 000 mm	**B 3**
2 001 ... 2 500 mm	**B 4**
2 501 ... 3 000 mm	**B 5**
75 mm compact version	**C 1**

© Siemens 2020

Selection and ordering data

	Order code
Further designs	
Please add "**-Z**" to Article No. and specify Order code(s).	
Cleaning including Certificate(oil, grease, and silicone free).	**W01**
Enter the total insertion length in plain text description.	**Y01**
Identification label (measurement loop) stainless steel.	**Y17**
Identification Label (measurement loop) foil.	**Y18**
Output switching delay (1 ... 60 s)/default is 1 s	**Y36**
NACE0175 to 3.1 Material Certificate for material (EN 10204 NACE MR 0175) Note: not available with some Process connection options.	**D07**
Material Inspection 3.1-Inspection certificate for material (EN 10204)	**C05**
Acceptance test Certificate 2.2 for material (EN 10204)	**C15**
Dye penetration test, results confirmed via a 3.1 certificate/instrument (EN 10204)	**C13**
3.1-Inspection certificate for instrument with test data (EN 10204)	**C25**
Quality and test plan	**C26**
Helium leak test + 3.1 certificate/instrument	**C32**
Spare Parts and Accessories	Article No.
SITRANS SCSC single channel signal conditioner and remote test	**7ML5760-.....-....**
SITRANS TCSC two channel signal conditioner and remote test	**7ML5761-.....-....**
Operating Instructions	
All literature is available to download for free, in a range of languages, at	

http://www.siemens.com/processinstrumentation/documentation

	Article No.
SITRANS SCSC, single channel, signal conditioner ↗	**7ML5760-** ■ ■ **A** ■ **1** - ■ ■ ■ ■
Provides power and relay output for one LVL200 vibrating switch, 8/16 mA electronics design. Provides remote test of any LVL200 device.	
↗ Click on the Article No. for the online configuration in the PIA Life Cycle Portal.	
Approvals	
For Ex-free area	**1 A**
ATEX II (1) G/D [Ex ia Ga/Da] IIC/IIIC, I (M1) [Ex ia Ma] I	**1 D**
ATEX II (1) G/D (Ex ia Ga/Da) IIC/IIIC, I (M1) (Ex ia Ma) I + WHG	**1 E**
IEC [Ex ia Ga] IIC, [Ex ia Da] IIIC, [Ex ia Ma] I	**1 H**
IEC (Ex ia Ga) IIC, (Ex ia Da) IIIC, (Ex ia Ma) I + WHG	**1 J**
Ex-free area (incl. EAC approval)	**2 A**
SIL qualification	
Without	**1**
With	**2**
Version	
Single-channel (8/16 mA) for level detection	**1**
Single channel (8/16 mA), level detection with fail safe relay	**2**
Housing/cable entry	
Plastic/IP20	**A**
Terminal block connection	
Detachable 2.5 mm²/ Ex sensor: 2 x blue; output and operating voltage: 2 x black	**A**
Detachable 2.5 mm²/ sensor: 2 x black; output and operating voltage: 2 x black	**B**
Language	
English	**0**
German	**1**
Operating Instructions	
All literature is available to download for free, in a range of languages, at	

http://www.siemens.com/processinstrumentation/documentation

1) Not available with Process Connection options A0 and A2.
2) Available only with Rigid extension option C1.
3) Available only with 316L Process Connection and Rigid extension options.
4) Available only with Alloy C22 Rigid extension options.
5) Available only with Electronic options 3 and 6.
6) Available only with Housing/Cable entry options J, K, L, M.
7) Available only with Electronic option 6.
8) Available only with Electronic options 1, 2, and 4.
9) Available only with Gas tight seal/Process temperature option 1.
10) Not available with Housing/Cable entry options G, H, N, P.
11) Available only with Housing/Cable entry options J, K, L, M, N, P.
12) Not available with Housing/Cable entry options A and B.
13) Not available with Housing/Cable entry options A, B, G, H, N, P.

© Siemens 2020

Selection and ordering data

	Article No.
SITRANS TCSC, dual channel, signal conditioner ↗	**7ML5761-** ■ ■ **A** ■ **1** - ■ ■ ■ ■
Provides power and relay output for two LVL200 vibrating switch, 8/16 mA electronics design. Provides remote test of any LVL200 device.	
↗ Click on the Article No. for the online configuration in the PIA Life Cycle Portal.	
Approvals	
For Ex-free area[1]	**1 A**
ATEX II (1) G/D [Ex ia Ga/Da] IIC/IIIC, I (M1) [Ex ia Ma] I[2]	**1 D**
ATEX II (1) G/D (Ex ia Ga/Da) IIC/IIIC, I (M1) (Ex ia Ma) I + WHG	**1 E**
IEC [Ex ia Ga] IIC, [Ex ia Da] IIIC, [Ex ia Ma] I[2]	**1 H**
IEC (Ex ia Ga) IIC, (Ex ia Da) IIIC, (Ex ia Ma) I + WHG	**1 J**
Ex-free area (incl. EAC approval)	**2 A**
SIL qualification	
Without	**1**
With	**2**

	Article No.
SITRANS TCSC, dual channel, signal conditioner	**7ML5761-** ■ ■ **A** ■ **1** - ■ ■ ■ ■
Provides power and relay output for two LVL200 vibrating switch, 8/16 mA electronics design. Provides remote test of any LVL200 device.	
Version	
Double-channel (8/16 mA) for level detection	**1**
Housing/cable entry	
Plastic/IP20	**A**
Terminal block connection	
Detachable 2.5 mm²/ Ex sensor: 2 x blue; output and operating voltage: 2 x black	**A**
Detachable 2.5 mm²/ sensor: 2 x black; output and operating voltage: 2 x black	**B**
Language	
English	**0**
German	**1**
Operating Instructions	
All literature is available to download for free, in a range of languages, at	

http://www.siemens.com/processinstrumentation/documentation

[1] Available only with terminal block connection option B.
[2] Available only with terminal block connection option A.

Options

LVL200 threaded welded socket

G¾" A/316L

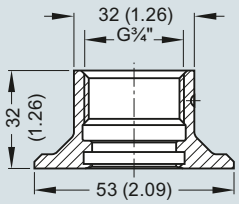

G1" A/316L

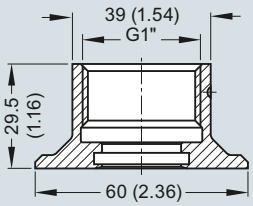

Lock fitting

LVL200 extended 64 bar

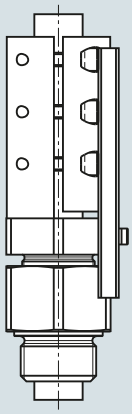

LVL200 extended 16 bar

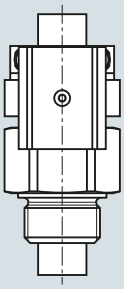

LVL200 extended unpressurized

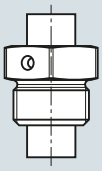

SITRANS LVL200 welded socket and lock fitting, dimensions in mm (inch)

© Siemens 2020

Options (continued)

SITRANS SCSC and TCSC LVL test conditioner

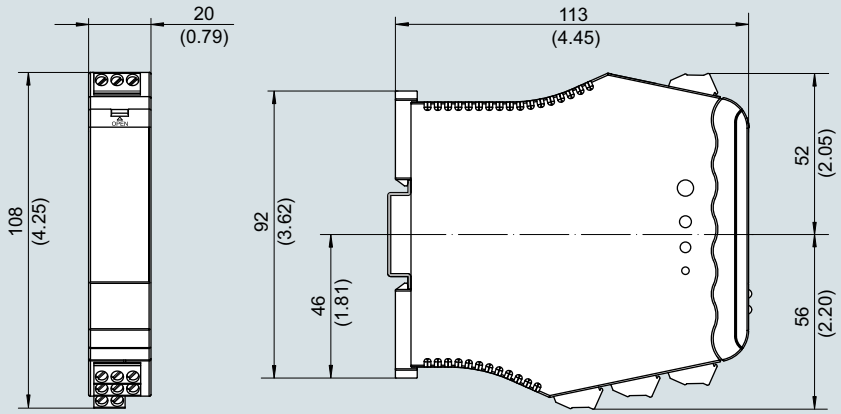

SITRANS SCSC and SITRANS TCSC LVL Test Conditioners, dimensions in mm (inch)

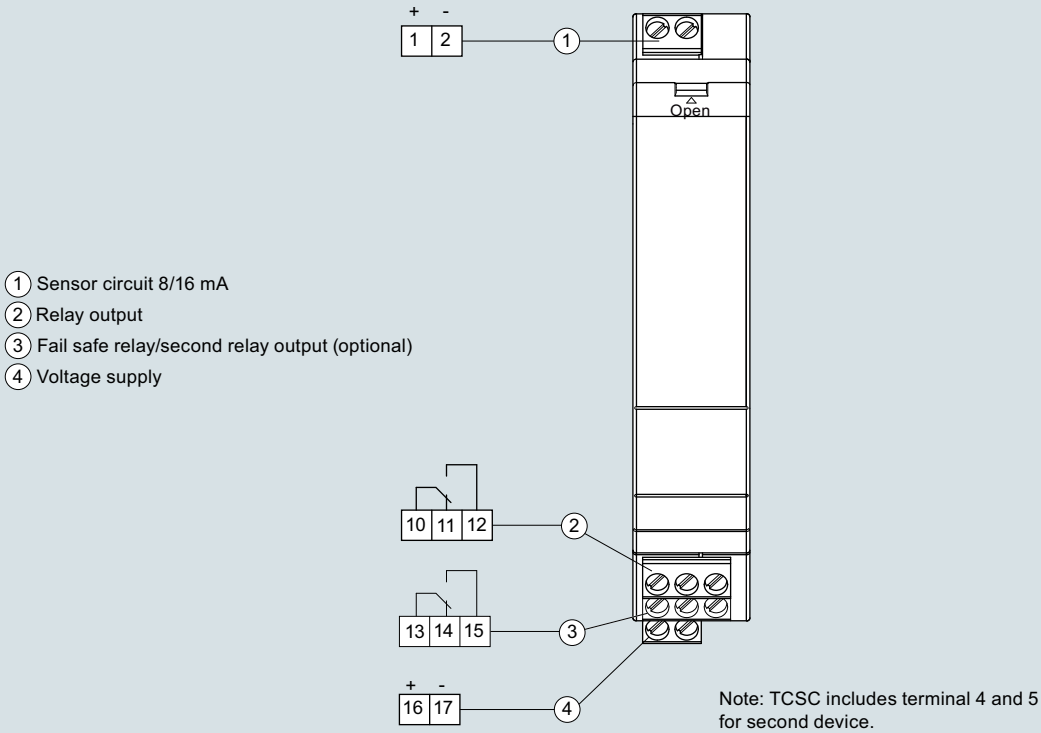

SITRANS SCSC and SITRANS TCSC LVL Test Conditioner connections

© Siemens 2020

Characteristic curves

Ambient/Process temperature

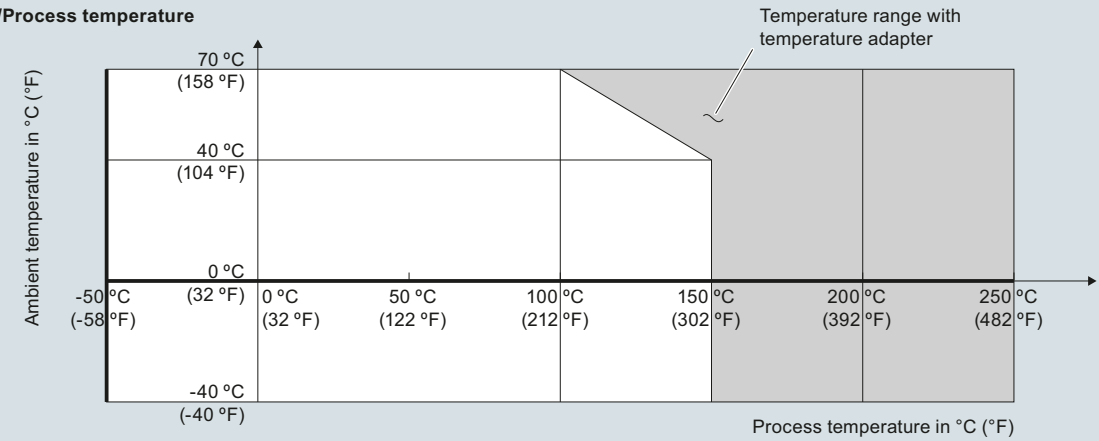

Process pressure with switch position 0.7 g/cm³ (mode switch)

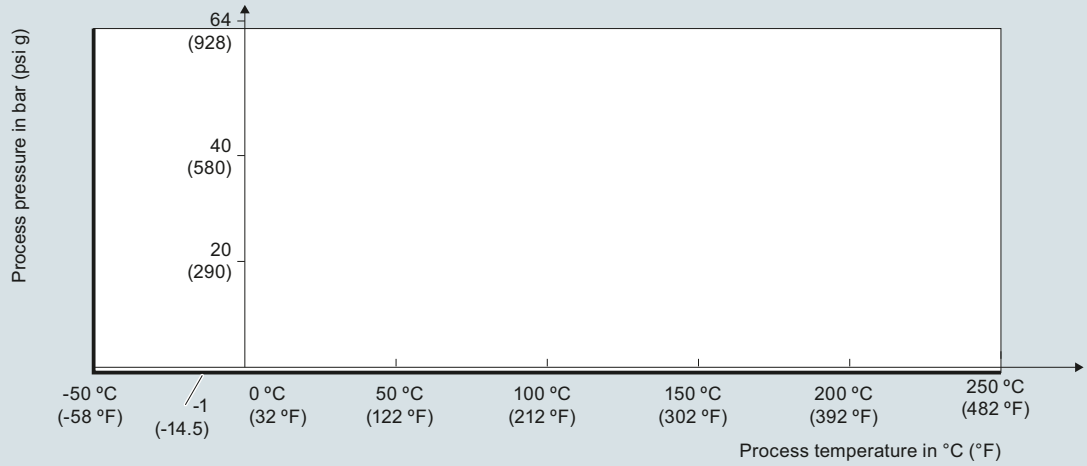

Process pressure with switch position 0.5 g/cm³ (mode switch)

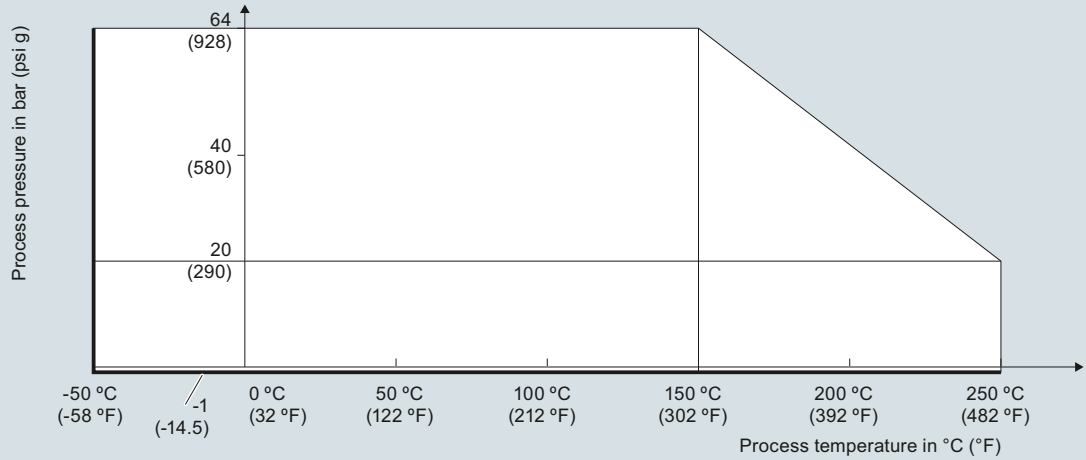

SITRANS LVL200 process pressure/process temperature/ambient temperature derating curves

© Siemens 2020

Characteristic curves (continued)

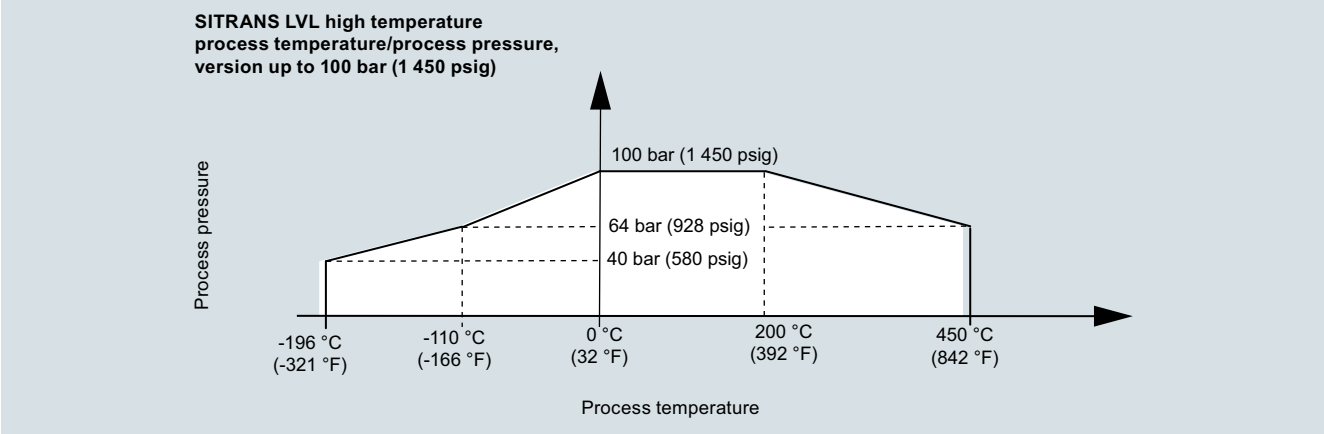

SITRANS LVL200 high temperature process temperature/process pressure curve, version up to 100 bar (1 450 psig)

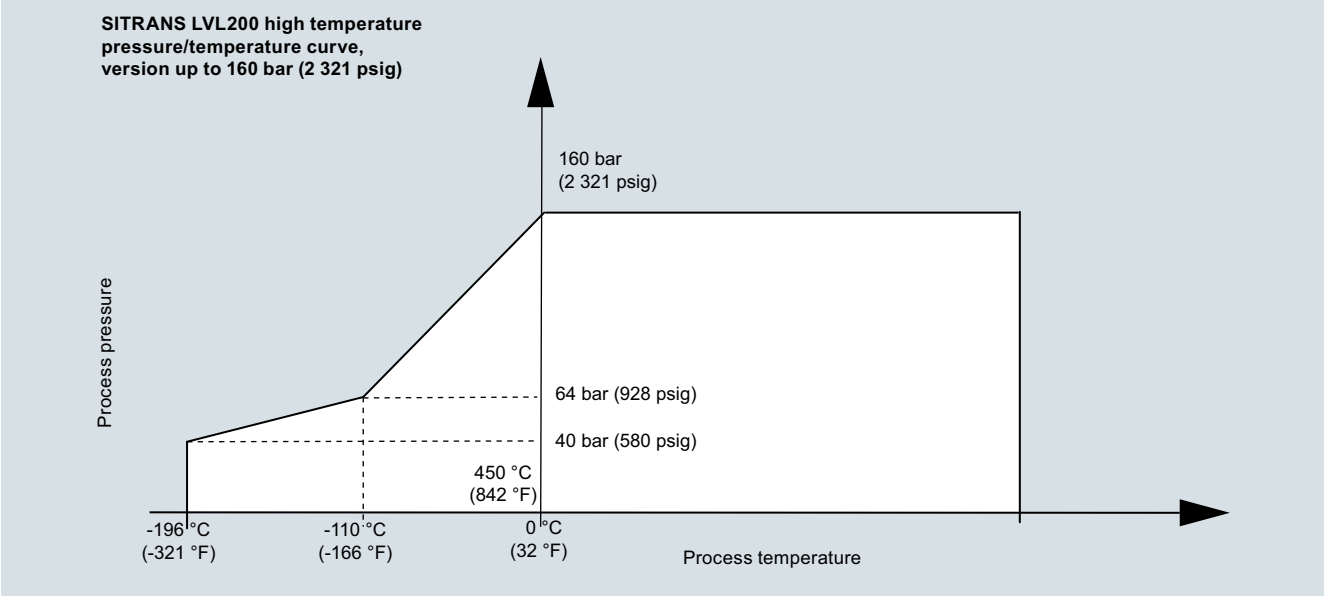

SITRANS LVL200 high temperature pressure/temperature curve, version up to 160 bar (2 321 psig)

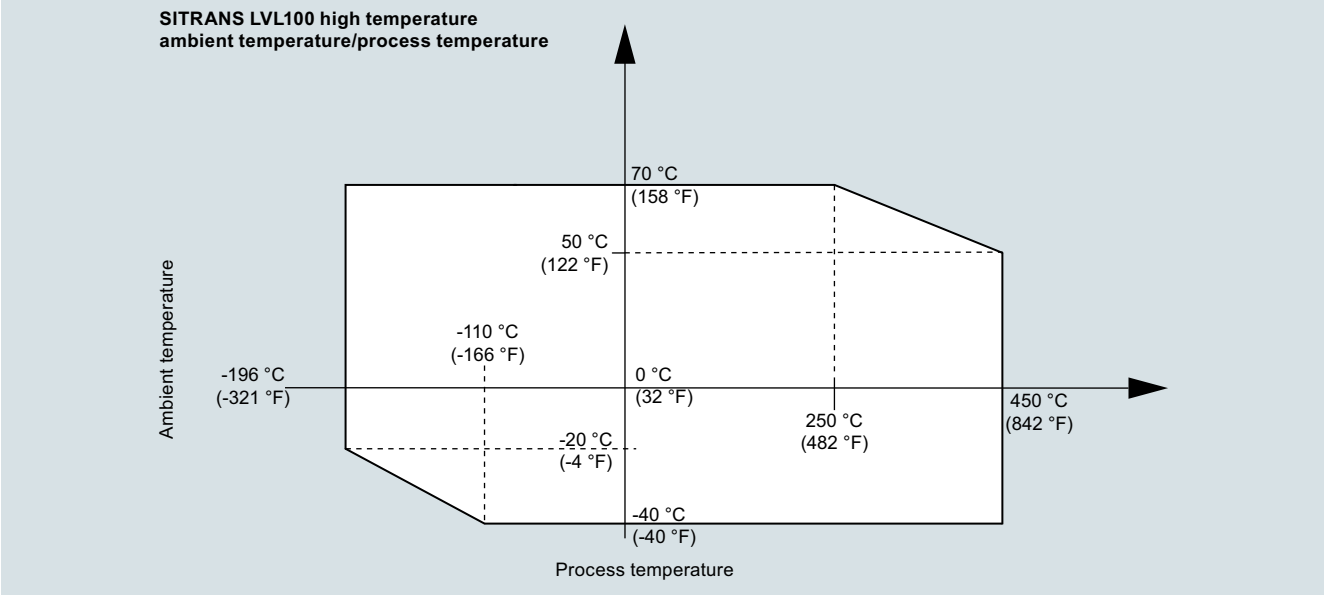

SITRANS LVL200 high temperature ambient temperature/process temperature

© Siemens 2020

Dimensional drawings

SITRANS LVL200, housing

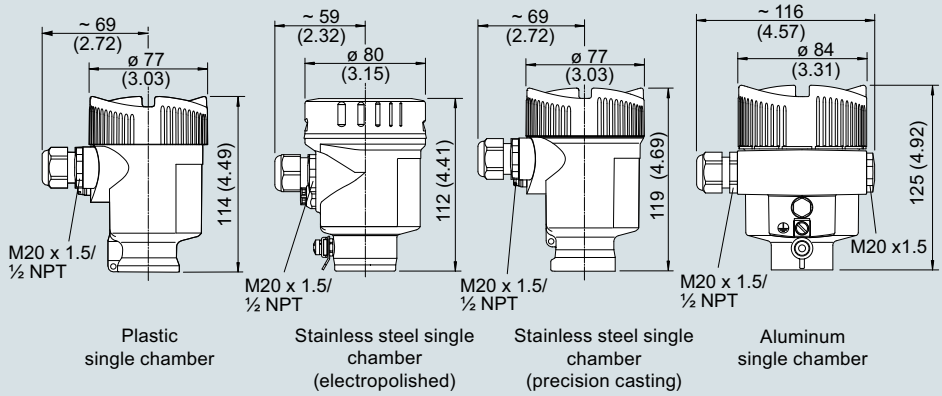

SITRANS LVL200 housing, dimensions in mm (inch)

SITRANS LVL200 standard

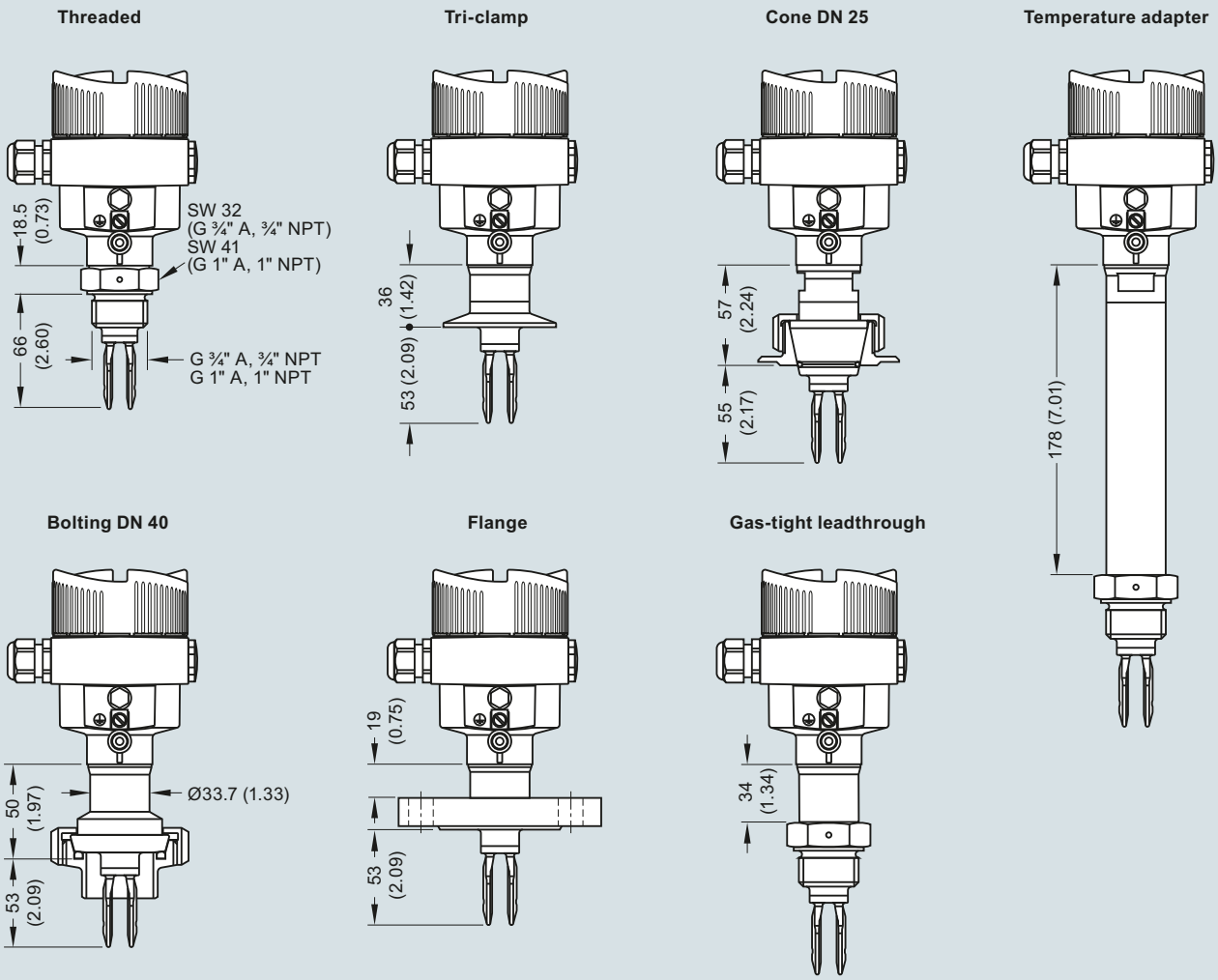

SITRANS LVL200 (standard), dimensions in mm (inch)

© Siemens 2020

Dimensional drawings (continued)

SITRANS LVL200 extended

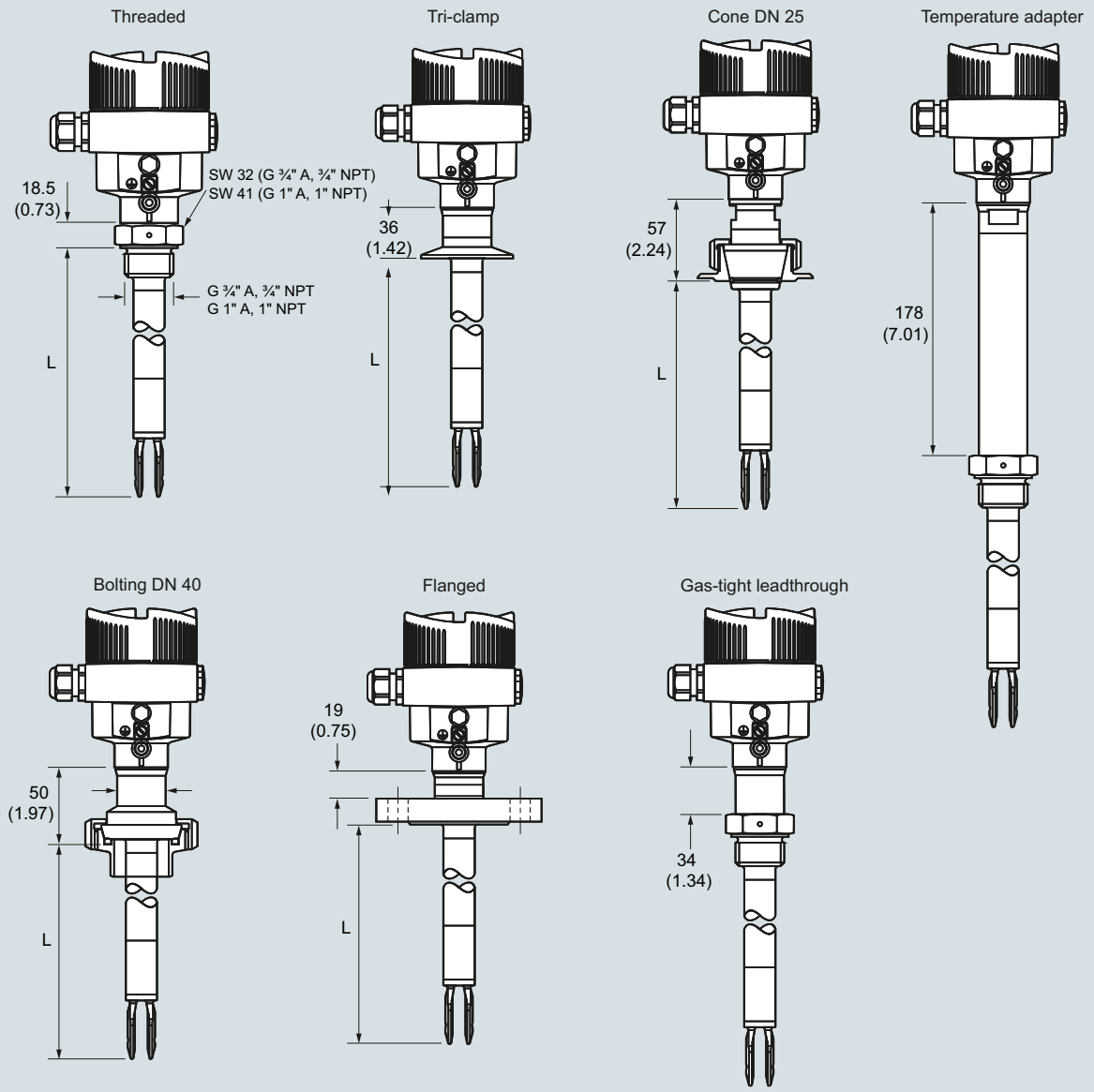

Sensor length (L)

316L, Alloy C22 (2.4602)	80 ... 6 000 mm (3.15 ... 236.2 inch)
Enamelled	80 ... 1 500 mm (3.15 ... 59.06 inch)
316L, ECTFE coated	80 ... 3 000 mm (3.15 ... 118.1 inch)
316L, PFA coated	80 ... 4 000 mm (3.15 ... 157.5 inch)

SITRANS LVL200 (extended), dimensions in mm (inch)

© Siemens 2020

Dimensional drawings (continued)

SITRANS LVL200 high temperature, compact version

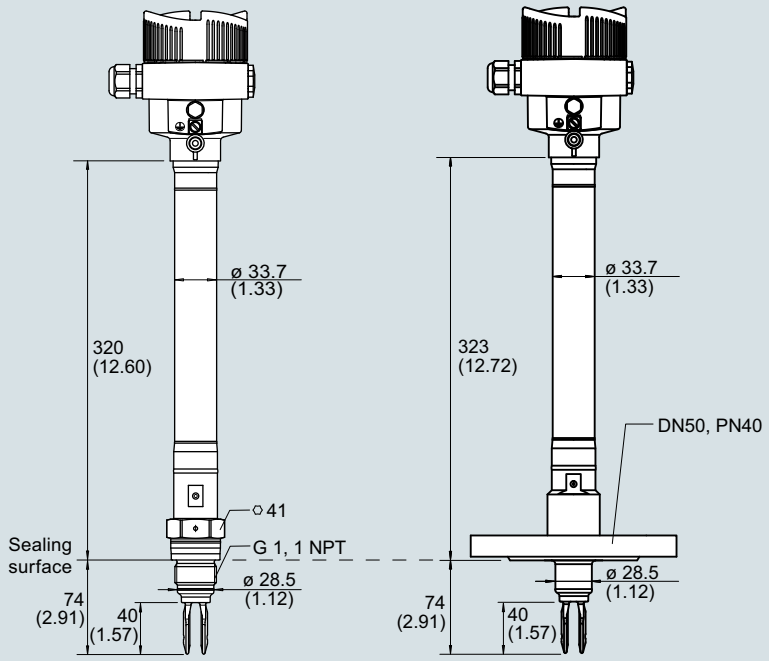

SITRANS LVL200 high temperature, compact version, dimensions in mm (inch)

© Siemens 2020

Dimensional drawings (continued)

SITRANS LVL200 high temperature, tube version

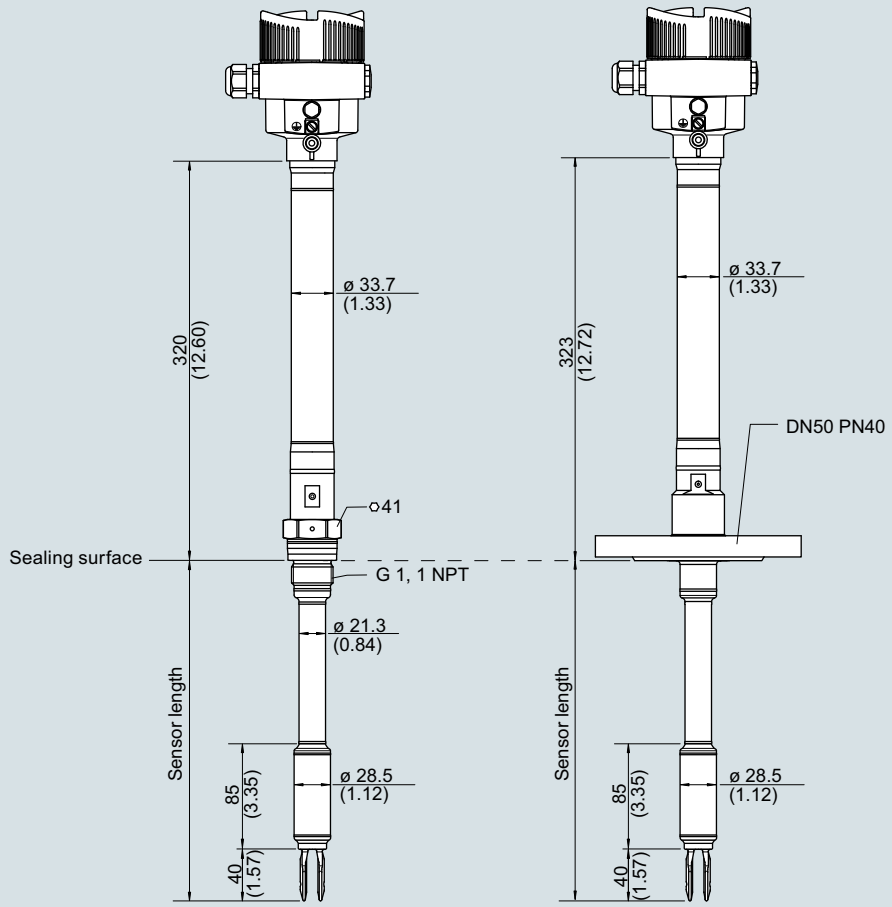

SITRANS LVL200 high temperature, tube version, dimensions in mm (inch)

© Siemens 2020

Circuit diagrams

SITRANS LVL200S, LVL200E Relay (DPDT)

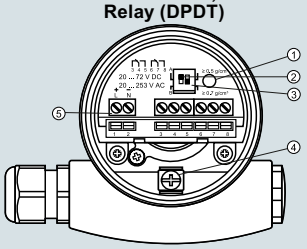

1	Control lamp
2	DIL switch for characteristics reversal
3	DIL switch for sensitivity adjustment
4	Ground terminal
5	Connection terminals

SITRANS LVL200H Relay (DPDT)

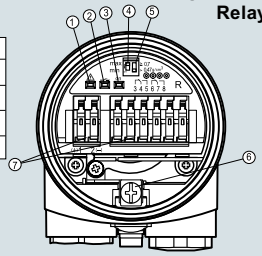

1	Control lamp - fault indication (red)
2	Control lamp - Switching status (yellow)
3	Control lamp - Operating status (green)
4	Mode switch for selecting the switching behaviour (min./max.)
5	DIL switch for sensitivity adjustment
6	Ground terminal
7	Connection terminals

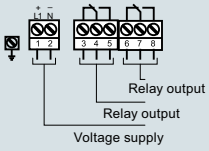

Contactless

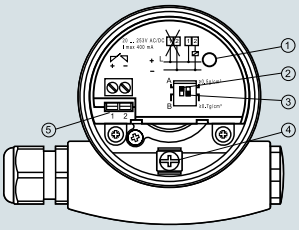

1	Control lamp
2	DIL switch for mode adjustment
3	DIL switch for switching point adaptation
4	Ground terminal
5	Connection terminals

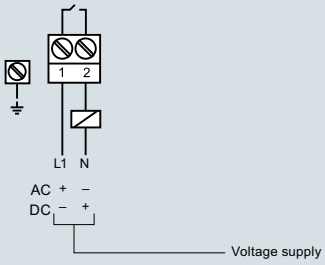

NAMUR

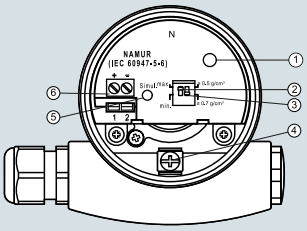

1	Control lamp
2	DIL switch for characteristics reversal
3	DIL switch for sensitivity adjustment
4	Ground terminal
5	Simulation key
6	Connection terminals

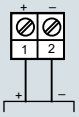

Amplifier according to NAMUR
IEC 60947-5-6, approx. 8.2 V

SITRANS LVL200S, LVL200E Transistor (NPN/PNP)

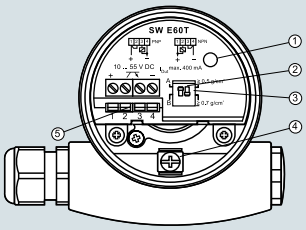

1	Control lamp
2	DIL switch for mode adjustment
3	DIL switch for switching point
4	Ground terminal
5	Connection terminals

SITRANS LVL200H, Transistor (NPN/PNP)

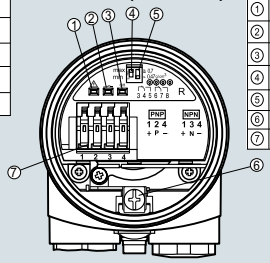

1	Control lamp - fault indication (red)
2	Control lamp - Switching status (yellow)
3	Control lamp - Operating status (green)
4	Mode switch for selecting the switching behaviour (min./max.)
5	DIL switch for sensitivity adjustment
6	Ground terminal
7	Connection terminals

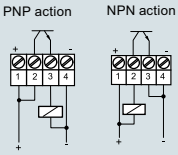

SITRANS LVL200S, LVL200E 8/16 mA

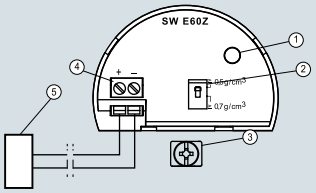

1	Control lamp
2	DIL switch for sensitivity adjustment
3	Ground terminal
4	Connection terminals
5	Processing system or PLC

SITRANS LVL200H 8/16 mA

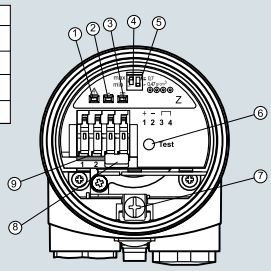

1	Control lamp - fault indication (red)
2	Control lamp - switching status (yellow)
3	Control lamp - operating status (green)
4	Mode switch for selecting the switching behavior (min./max.)
5	DIL switch for sensitivity behavior (min./max.)
6	Test key
7	Ground terminal
8	Connector block
9	Connection terminals

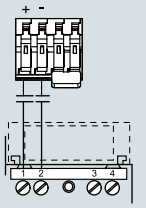

SITRANS LVL200 connections

© Siemens 2020

Overview

SITRANS LVS100 is a vibrating point level switch for material detection in bulk solids.

Benefits

- High resistance to mechanical forces
- Sliding sleeve options for adjustable insertion length and ease of cleaning
- Rotatable enclosure for ease of installation and wiring
- Suitable for point level detection of materials starting at a bulk density of 30 g/l (1.9 lb/ft^3)
- Customer desired extensions up to 4 000 mm (157.48 inch)

Application

SITRANS LVS100 detects high, low or demand levels of dry bulk solids in bins, silos or hoppers.

SITRANS LVS100 has a compact design and can be top, side, or angle mounted. The vibrating fork design ensures the tines are kept clean. The unique design of the fork and crystal assembly eliminates false high level readings even if tines become damaged.

A signal from the electronic circuit excites a crystal in the probe causing the fork to vibrate. If the fork is covered by material, the change in vibration is detected by the electronic circuitry which causes the relay to change state after a one second delay. When the fork is free from material pressure, full vibration resumes and the relay reverts to its normal condition.

- Key Applications: dry bulk solids in bins, silos, hoppers

Configuration

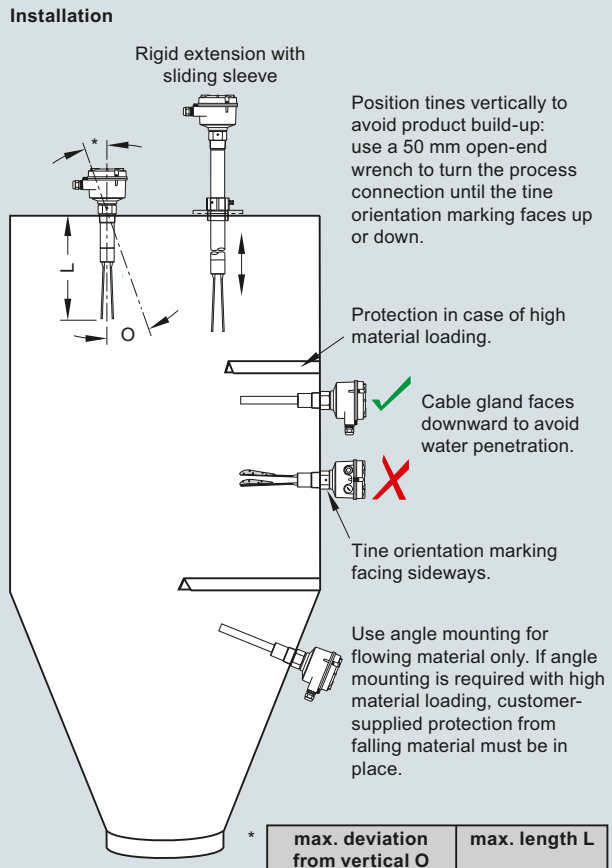

max. deviation from vertical O	max. length L
5°	4.0 m
45°	1.2 m
> 45°	0.6 m

SITRANS LVS100 installation, dimensions in mm (inch)

© Siemens 2020

Technical specifications

Mode of Operation	
Measuring principle	Vibrating point level switch
Input	
Measured variable	High, low and demand
Measuring frequency	200 Hz
Output	
Relays	DPDT relay
Relay delay	From loss of vibration: approximately 1 second
	From resumption of vibration: approximately 1 ... 2 s
Signal delay	Probe uncovered to covered: approximately 1 s
	Probe covered to uncovered: approximately 1 ... 2 s
Relay fail-safe	High or low, switch selectable
Alarm output	Relay 8 A at 250 V AC, non-inductive
	Relay 5 A at 30 V DC, non-inductive
Sensitivity	High or low, switch selectable
Rated operating conditions	
Installation conditions	
• Location	Indoor/outdoor
Ambient conditions	
• Ambient temperature	-40 ... +60 °C (-40 ... +140 °F)
• Storage temperature	-40 ... +80 °C (-40 ... +176 °F)
• Installation category	III
• Pollution degree	2
Medium conditions	
• Process temperature	-40 ... +150 °C (-40 ... +302 °F)
• Max. threaded bushing temperature	80 °C (176 °F)
• Max. enclosure surface temperature (Category 2D)	90 °C (194 °F)
• Max. extension surface temperature (Category 1D)	150 °C (302 °F)
• Pressure (vessel)	Max. 10 bar g (145 psi g) European Pressure Directive 2014/68/EU: Category 1
Minimum material density	Approx. 30 g/l (1.9 lb/ft^3)

Design	
Material	
• Enclosure	Epoxy coated aluminum
Process connection	• Thread 1¼" NPT [(Taper), ANSI/ASME B1.20.1], R 1½" [(BSPT), EN 10226] • Thread R 1½" [(BSPT), EN 10226], ½" NPT [(Taper), ANSI/ASME B1.20.1], sliding sleeve [min. length 500 mm (19.69 inch)] • Thread material: stainless steel 304 (1.4301) or 316L (1.4404) depending on configuration
Tine material	Stainless steel 316L (1.4404)
Degree of protection	IP66/Type 4/NEMA 4
Conduit entry	2 x M20 x 1.5 or 2 x ½" NPT (For FM and CSA approved versions only.)
Weight	Standard version, no extensions: approx. 1.7 kg (3.7 lb)
Power supply	• 19 ... 230 V AC, +10 %, 50 ... 60 Hz, 8 VA • 19 ... 40 V DC, +10 %, 1.5 W
Certificates and approvals	• CSA/FM General Purpose • CE • CSA/FM Dust Ignition Proof • RCM • ATEX II 1/2 D • IECex

© Siemens 2020

Selection and ordering data

	Article No.
SITRANS LVS100 Vibrating fork point level switch ↗	**7ML5735-**
Level and material detection for dry bulk solids. Extension options to 4 m (13.12 ft).	■ ■ ■ ■ ■ - 0 ■ A 0
↗ Click on the Article No. for the online configuration in the PIA Life Cycle Portal.	
Input Voltage	
DPDT Relay: 19 ... 230 V AC, 19 ... 40 V DC	1
DPDT Relay: 19 ... 230 V AC, 19 ... 40 V DC (stocked version)[1)3)]	2
Process temperature	
Up to 150 °C (302 °F)	A
Process connection	
Threaded	
R 1½" [(BSPT), EN 10226]	A
1¼" NPT [(Taper), ANSI/ASME B1.20.1]	B
R 1½" [(BSPT), EN 10226] DIN 2999 thread, sliding sleeve [min. length 500 mm (19.69 inch)][2)]	C
1½" NPT [(Taper), ANSI/ASME B1.20.1] , sliding sleeve [min. length 500 mm (19.69 inch)][2)]	D
Extension length	
Stainless steel 316L (1.4404)	
Standard length, 170 mm (6.69 inch)	1 1
Add Order code Y01 and plain text: "Insertion length ... mm"	
Stainless steel 304 (1.4301)	
230 ... 500 mm (9.05 ... 19.69 inch)	1 2
501 ... 1 000 mm (19.72 ... 39.37 inch)	1 3
1 001 ... 1 500 mm (39.41 ... 59.06 inch)	1 4
1 501 ... 2 000 mm (59.09 ... 78.74 inch)	1 5
2 001 ... 2 500 mm (78.78 ... 98.43 inch)	1 6
2 501 ... 3 000 mm (98.46 ... 118.11 inch)	1 7
3 001 ... 3 500 mm (118.15 ... 137.80 inch)	1 8
3 501 ... 4 000 mm (137.83 ... 157.48 inch)	2 0
Approvals	
CSA/FM General Purpose, CE, RCM	A
CSA/FM Class II, Div. 1, Groups E, F, G, Class III, ATEX II ½ D, RCM	B
IEC-Ex Ex t IIIC T-- Da/Db IP6X	C
EAC Ex ta/tb IIIC Da/Db	D

1) Only available with the following configurations 7ML5735-2AA11-0AA0 or 7ML5735-2AB11-0AA0.

2) Not available with extension length options 11 and 12.

3) Input voltage 2 not allowed with extension length 16, 17, 18 or 20.

	Order code
Further Designs	
Please add "**-Z**" to Art. No. and specify Order code(s).	
Total insertion length: Enter the total insertion length in plain text description, max. (50 mm increments)	**Y01**
Signal bulb inserted in M20 cable gland[1)]	**A20**
Factory test certificate - M to DIN 55350, Part 18	**C11**
Operating Instructions	
All literature is available to download for free, in a range of languages, at	
http://www.siemens.com/processinstrumentation/documentation	
Spare Parts	Article No.
Replacement Electronics Module LVS100 DPDT Relay (19 ... 253 V AC, 19 ... 55 V DC)	**7ML1830-1NS**
R 1½" [(BSPT), EN 10226] DIN 2999 thread, sliding sleeve	**7ML1830-1NT**
1½" NPT [(Taper), ANSI/ASME B1.20.1], sliding sleeve [min. length 500 mm (19.69 inch)]	**7ML1830-1NU**

1) Available only with Approval option A.

4

© Siemens 2020

Dimensional drawings

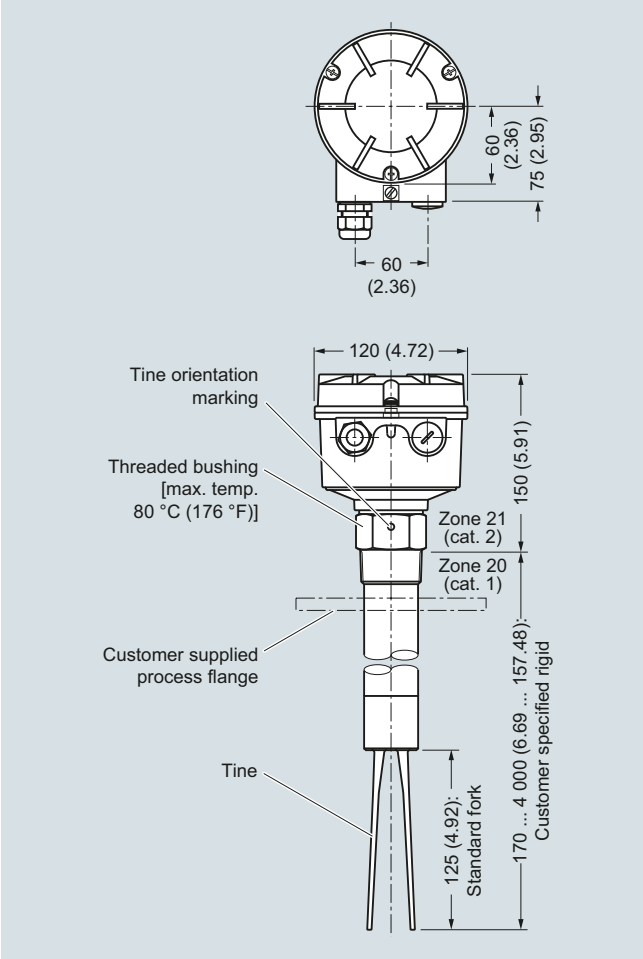

SITRANS LVS100, dimensions in mm (inch)

Circuit diagrams

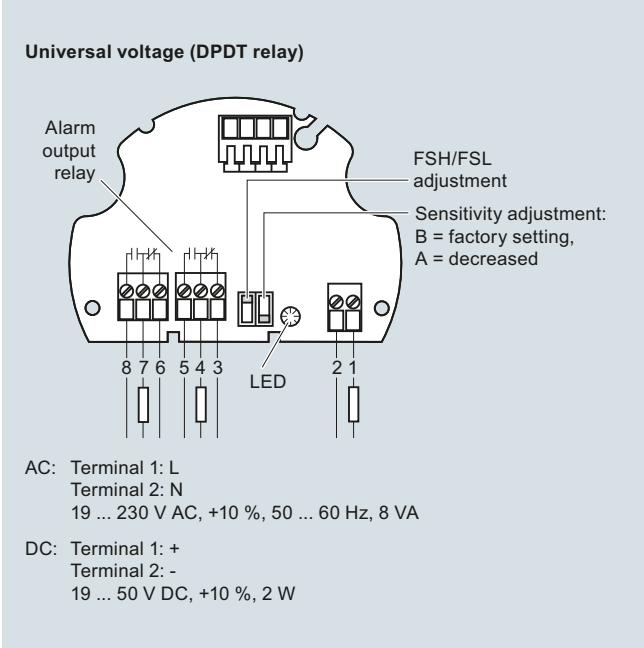

SITRANS LVS100 connections

© Siemens 2020

Overview

SITRANS LVS200 is a vibrating point level switch for high, low, or demand level detection of bulk solids.

Benefits

- High resistance to mechanical forces
- Strong vibration resistance to high bulk material loads
- Rotatable enclosure for convenient wiring
- Suitable for low density material: standard version, 20 g/l (1.3 lb/ft^3); liquid/solid interface version, 50 g/l (3 lb/ft^3) and low density option min. 5 g/l (0.3 lb/ft^3)
- Customer desired extensions up to 20 000 mm (787 inch)
- Optional detection of solids within liquid
- Durable short fork option with 165 mm (6.5 inch) insertion length

Application

The standard LVS200 detects high, low, or demand levels of dry bulk solids in bins, silos, or hoppers. The liquid/solid interface version can also detect settled solids within liquids or solids within confined spaces such as feed pipes. It is designed to ignore liquids in order to detect the interface between a solid and a liquid.

A pipe extension version is available with either the standard or liquid/solid interface electronics and fork, separated by a customer supplied 1 inch pipe.

SITRANS LVS200 has an optional 4 to 20 mA output for monitoring buildup on the fork to determine when preventative maintenance should be performed in sticky applications.

The LVS200 has a compact design and can be top, side or angle mounted. The vibrating fork design ensures the tines are kept clean. The unique design of the fork and crystal assembly eliminates false high level readings even if tines become damaged.

A signal from the electronic circuit excites a crystal in the probe causing the fork to vibrate. If the fork is covered by material, the change in vibration is detected by the electronic circuitry which causes the relay to change state after a one second delay. When the fork is free from material pressure, full vibration resumes and the relay reverts to its normal condition.

- Key Applications: dry bulk solids in bins, silos, hoppers or settled solids within liquids (interface version)

© Siemens 2020

Technical specifications

Mode of operation	
Measuring principle	Vibrating point level switch
Input	
Measured variable	High, low, and demand
Measuring frequency	
• Standard	125 Hz
• Liquid/solid interface and short fork version	350 Hz
Output	
PNP	Open collector: Permanent load max. 0.4 A, short-circuit and overload protected Turn-on voltage: max. 50 V (reverse protection)
2-wire without contact	Load current: • Min. 10 mA • Max. 500 mA permanent • Max. 2A < 200 ms • Max. 5A < 50 ms Voltage drop on the electronic module: max. 7 V with closed electric circuit Cut-off current with open electric circuit: max. 5 mA
Relays	
• Version with 1 relay	SPDT relay
• Version with 2 relays	DPDT relay
Relay delay	• From loss of vibration: approximately 1 second • From resumption of vibration: approximately 1 ... 2 seconds
Signal delay	• Probe uncovered to covered: approximately 1 second • Probe covered to uncovered: approximately 1 ... 2 seconds
Relay fail-safe	High or low, switch selectable
Alarm output	• Relay 8 A at 250 V AC, non-inductive • Relay 5 A at 30 V DC, non-inductive
mA output	8/16 mA or 4 ... 20 mA
• Resolution	4 ... 20 mA ± 0.1 mA
Sensitivity	High or low, switch selectable

Rated operating conditions	
Installation conditions	
• Location	Indoor/outdoor
Ambient conditions	
• Ambient temperature	-40 ... +60 °C (-40 ... +140 °F)
• Storage temperature	-40 ... +80 °C (-40 ... +176 °F)
• Installation category	III
• Pollution degree	2
Medium conditions	
• Process temperature	• All except CSA Class II, Group G: -40 ... +150 °C (-40 ... +302 °F) • CSA Class II, Group G: -40 ... +140 °C (-40 ... +284 °F), CSA temperature code T3B
• Max. threaded bushing temperature	80 °C (176 °F)
• Max. enclosure surface temperature (Category 2D)	90 °C (194 °F)
• Max. extension surface temperature (Category 1D)	150 °C (302 °F)
• Pressure (vessel)	Max. 30 bar g (435 psi g) European Pressure Directive 2014/68/EU: Category 1
• Minimum material density	• Standard version: approx. 20 g/l (1.2 lb/ft^3) • Liquid/solid interface version: approx. 50 g/l (3 lb/ft^3) • Optional low density version: approx. 5 g/l (0.3 lb/ft^3)
Design	
Material	
• Enclosure	Epoxy coated aluminum
Process connection	• Thread 1½" NPT [(Taper), ANSI/ASME B1.20.1], R ½" [(BSPT), EN 10226], and flange options • Optional sliding bushing with 2" NPT [(Taper), ANSI/ASME B1.20.1] or BSP thread • Thread material: stainless steel 303 (1.4301)
Tine material	Stainless steel 316L (1.4404), PTFE-coated tines are available upon special request
Degree of protection	IP65/Type 4/NEMA 4
Conduit entry	2 x M20 x 1.5 or 2 x ½" NPT (For FM and CSA approved versions only.)
Weight	• Standard version, no extensions: approx. 2.0 kg (4.4 lb) • Solids/liquids version, no extensions: approx. 1.9 kg (4.2 lb)
Power supply	• 19 ... 230 V AC, +10 %, 50 ... 60 Hz, 8 VA • 19 ... 55 V DC, +10 %, 1.5 W
Certificates and approvals	
	• CSA/FM General Purpose • CE • CSA/FM Dust Ignition Proof • RCM • ATEX II 1/2 D • CSA/FM IS Class I, II, III Div. 1, Groups A, B, C, D, E, F, G, FM Class I, Aex ia IIC, CSA Class I, Ex ia IIC, available only with power supply options 5 and 6 • ATEX II 1G and 1/2 G Eex ia IIC; ATEX II 1D and 1/2 D, available only with power supply option 5

© Siemens 2020

Selection and ordering data

	Article No.
SITRANS LVS200 Vibrating fork point level switch, standard design ↗	**7ML5731-** ■ ■ ■ ■ ■ - ■ ■ **A 0**
Level and material detection in dry bulk solids. Extension options to 4 m (13.12 ft). With advanced testing, output, and durability options, including low bulk densities.	
↗ Click on the Article No. for the online configuration in the PIA Life Cycle Portal.	
Power supply	
19 ... 230 V AC, 19 ... 55 V DC, one relay output (SPDT)[1]	**1**
19 ... 230 V AC, 19 ... 55 V DC, two relay outputs (DPDT)[1]	**2**
18 ... 50 V DC PNP[1]	**3**
19 ... 230 V AC/DC without contact, 2-wire loop powered[1]	**4**
7 ... 9 V DC (requires NAMUR switch amplifier) NAMUR IEC 60947-5-6, 2-wire[2]	**5**
8/16 mA or 4 ... 20 mA; 12.5 ... 35 V DC, 2-wire[3]	**6**
19 ... 230 V AC, 19 ... 55 V DC, one relay output (SPDT) basic version[4][5]	**7**
Process temperature	
Without temperature isolator	**A**
With temperature isolator	**B**
Separated enclosure - cable length 1.5 m (4.92 ft) [max. temperature process 150 °C (302 °F)/max. temperature electronics 60 °C (140 °F)]	**C**
Separated enclosure - cable length 4.0 m (13.12 ft) [max. temperature process150 °C (302 °F)/max. temperature electronics 60 °C (140 °F)]	**D**
Process connection	
Threaded	
R 1½" [(BSPT), EN 10226]	**A**
1½" NPT [(Taper), ANSI/ASME B1.20.1]	**B**
G 2" [(BSPP), EN ISO 228-1], sliding sleeve [min. length 500 mm (19.69 inch)][6]	**C**
2" NPT [(Taper), ANSI/ASME B1.20.1], sliding sleeve [min. length 500 mm (19.69 inch)][6]	**D**
Flanged	
DN 100 PN 6, EN 1092-1, flat face[7]	**E**
DN 100 PN 16, EN 1092-1, flat face	**F**
2" ASME 150 lb B16.5, raised face	**G**
3" ASME 150 lb B16.5, raised face	**H**
4" ASME 150 lb B16.5, raised face	**J**
2" Tri-clamp (DN 50) ISO 2852	**K**
Extension length	
Stainless steel 304 (1.4301)	
Standard length, 235 mm (9.25 inch)	**1 1**
Add Order code Y01 and plain text: "Insertion length ... mm"	
300 ... 500 mm (11.81 ... 19.69 inch)	**1 2**
501 ... 750 mm (19.72 ... 29.53 inch)	**1 3**
751 ... 1 000 mm (29.57 ... 39.37 inch)	**1 4**
1 001 ... 1 250 mm (39.41 ... 49.21 inch)	**1 5**
1 251 ... 1 500 mm (49.25 ... 59.06 inch)	**1 6**
1 501 ... 1 750 mm (59.09 ... 68.90 inch)	**1 7**
1 751 ... 2 000 mm (68.94 ... 78.74 inch)	**1 8**
2 001 ... 2 250 mm (78.78 ... 88.58 inch)	**2 1**
2 251 ... 2 500 mm (88.62 ... 98.43 inch)	**2 2**
2 501 ... 2 750 mm (98.46 ... 108.27 inch)	**2 3**
2 751 ... 3 000 mm (108.31 ... 118.11 inch)	**2 4**
3 001 ... 3 250 mm (118.15 ... 127.95 inch)	**2 5**
3 251 ... 3 500 mm (127.99 ... 137.80 inch)	**2 6**
3 501 ... 3 750 mm (137.83 ... 147.64 inch)	**2 7**
3 751 ... 4 000 mm (147.68 ... 157.48 inch)	**2 8**

	Article No.
SITRANS LVS200 Vibrating fork point level switch, standard design	**7ML5731-** ■ ■ ■ ■ ■ - ■ ■ **A 0**
Level and material detection in dry bulk solids. Extension options to 4 m (13.12 ft). With advanced testing, output, and durability options, including low bulk densities.	
Stainless steel 316L (1.4404)	
Standard length, 235 mm (9.25 inch)	**3 1**
Add Order code Y01 and plain text: "Insertion length ... mm"	
300 ... 500 mm (11.81 ... 19.69 inch)	**3 2**
501 ... 750 mm (19.72 ... 29.53 inch)	**3 3**
751 ... 1 000 mm (29.57 ... 39.37 inch)	**3 4**
1 001 ... 1 250 mm (39.41 ... 49.21 inch)	**3 5**
1 251 ... 1 500 mm (49.25 ... 59.06 inch)	**3 6**
1 501 ... 1 750 mm (59.09 ... 68.90 inch)	**3 7**
1 751 ... 2 000 mm (68.94 ... 78.74 inch)	**3 8**
2 001 ... 2 250 mm (78.78 ... 88.58 inch)	**4 1**
2 251 ... 2 500 mm (88.62 ... 98.43 inch)	**4 2**
2 501 ... 2 750 mm (98.46 ... 108.27 inch)	**4 3**
2 751 ... 3 000 mm (108.31 ... 118.11 inch)	**4 4**
3 001 ... 3 250 mm (118.15 ... 127.95 inch)	**4 5**
3 251 ... 3 500 mm (127.99 ... 137.80 inch)	**4 6**
3 501 ... 3 750 mm (137.83 ... 147.64 inch)	**4 7**
3 751 ... 4 000 mm (147.68 ... 157.48 inch)	**4 8**
Material process connection/extension	
Stainless steel threads 304 (1.4301), flanges 321 (1.4541), Tri-clamp 304 (1.4301)[8]	**1**
Stainless steel 316L (1.4404)[9]	**2**
Approvals	
CSA/FM Dust Ignition Proof, RCM	**A**
ATEX II ½ D, RCM	**B**
CSA/FM General Purpose, RCM, CE	**C**
CE, RCM	**D**
CSA/FM IS Class I, II, III Div. 1, Groups A, B, C, D, E, F, G, FM Class I, Aex ia IIC, CSA Class I, Ex ia IIC, RCM	**E**
ATEX II 1G and ½G Eex ia IIC; ATEX II 1D and ½D, RCM	**F**
IEC-Ex t IIIC Da/Db	**G**
EAC Ex ta/tb IIIC Da/Db, Ex ta IIIC Da	**H**
EAC Ex Ga/Gb Ex ia IIC, 0Ex ia IIC Ga; Ex ta/tb IIIC Da/Db, Ex ta IIIC Da	**J**

1) Available with Approval options A ... D, G only.
2) Available with Approval options D, E, F only.
3) Available with Approval options B, D, G only.
4) Available with configurations 7ML5731-7AA11-1BA0 or 7ML5731-7AB11-1AA0 only.
5) Basic version is cost effective and offers fast delivery.
6) Not available with extension length options 11, 12, 31, 32.
7) Max. 6 bar (87 psi).
8) Available with option extension length 11 ... 28.
9) Available with option extension length 31 … 48.

© Siemens 2020

Selection and ordering data

	Order code
Further Designs	
Please add "**-Z**" to Article No. and specify Order code(s).	
Factory test certificate - M to DIN 55350, Part 18	**C11**
Total insertion length: Enter the total insertion length in plain text description, max. 4 000 mm (157.48 inch)	**Y01**
Stainless steel tag [100 x 45 mm (3.94 x 1.77 inch)]: Measuring-point number/identification (max. 27 characters); specify in plain text	**Y14**
Enhanced sensitivity > 5 g/l via electronics and increased insertion length of 25 mm (0.98 inch)[3]	**K05**
Enhanced sensitivity < 5 g/l via electronics, increased insertion length of 25 mm (0.98 inch), and increased aluminum fork width[1][3]	**G01**
Signal bulb inserted in M20 cable gland[2]	**A20**
NAMUR 8/16 mA switch amplifiers available, contact factory for pricing	
Operating Instructions	
All literature is available to download for free, in a range of languages, at	

http://www.siemens.com/processinstrumentation/documentation

Spare Parts	Article No.
Replacement Electronics Module (125 Hz) [19 ... 230 V AC, 19 ... 55 V DC, one relay output (SPDT)]	**7ML1830-1KL**
Replacement Electronics Module (125 Hz) [19 ... 230 V AC, 19 ... 55 V DC, two relay output (DPDT)]	**A5E35525363**
Sliding sleeve, 2" BSP (ISO 228)	**7ML1830-1JM**
Sliding sleeve, 2" NPT (ASME B1.20.1)	**7ML1830-1JN**
Namur Isolator switch amplifier relay output KFD2-SR2-Ex1.W	**A5E35667901**
SITRANS LVS200, standard, power supply 7, process temperature A, process connection A, extension length 11, material process connection/ extension 1, and approval B	**7ML5731-7AA11-1BA0**
SITRANS LVS200, standard, power supply 7, process temperature A, process connection B, extension length 11, material process connection/ extension 1, and approval A	**7ML5731-7AB11-1AA0**

1) Available only with power supply option 1 and Approval options C, D and with Process connection flange options E ... J.
2) Available with Approval option D only.
3) K05 and G01 are not available together.

SITRANS LVS200 Vibrating fork point level switch, short fork and interface design ↗	**7ML5732-** ■ ■ ■ ■ ■ - ■ ■ **A 0**
Level and material detection in dry bulk solids or solids interface within a liquid. Extension options to 4 m (13.12 ft). With advanced testing, output, and durability options.	
↗ Click on the Article No. for the online configuration in the PIA Life Cycle Portal.	
Power supply	
19 ... 230 V AC, 19 ... 55 V DC, one relay output (SPDT)[6]	**1**
19 ... 230 V AC, 19 ... 55 V DC, two relay outputs (DPDT)[6]	**2**
18 ... 50 V DC PNP[6]	**3**
19 ... 230 V AC/DC without contact, 2-wire loop powered[6]	**4**
8/16 mA or 4 ... 20 mA; 12.5 ... 35 V DC, 2-wire[1]	**5**
Process temperature	
Without temperature isolator	**A**
With temperature isolator	**B**
Separated enclosure - cable length 1.5 m (4.92 ft) [max. temperature process 150 °C (302 °F)/max. temperature electronics 60 °C (140 °F)]	**C**
Separated enclosure - cable length 4.0 m (13.12 ft) [max. temperature process 150 °C (302 °F)/max. temperature electronics 60 °C (140 °F)]	**D**
Process connection	
Threaded	
R 1½" [(BSPT), EN 10226]	**A**
1½" NPT [(Taper), ANSI/ASME B1.20.1]	**B**
G 2" [(BSPP), EN ISO 228-1], sliding sleeve [min. length 500 mm (19.69 inch)][2]	**C**
2" NPT [(Taper), ANSI/ASME B1.20.1], sliding sleeve [min. length 500 mm (19.69 inch)][2]	**D**
Flanged	
DN 100 PN 6, EN 1092-1, flat face[3]	**E**
DN 100 PN 16, EN 1092-1, flat face	**F**
2" ASME 150 lb B16.5, raised face	**G**
3" ASME 150 lb B16.5, raised face	**H**
4" ASME 150 lb B16.5, raised face	**J**
2" Tri-clamp (DN 50) ISO 2852	**K**
Extension length	
Stainless steel 304 (1.4301)	
Standard length, 165 mm (6.50 inch)	**1 1**
Add Order code Y01 and plain text: "Insertion length ... mm"	
200 ... 500 mm (7.87 ... 19.69 inch)	**1 2**
501 ... 750 mm (19.72 ... 29.53 inch)	**1 3**
751 ... 1 000 mm (29.57 ... 39.37 inch)	**1 4**
1 001 ... 1 250 mm (39.41 ... 49.21 inch)	**1 5**
1 251 ... 1 500 mm (49.25 ... 59.06 inch)	**1 6**
1 501 ... 1 750 mm (59.09 ... 68.90 inch)	**1 7**
1 751 ... 2 000 mm (68.94 ... 78.74 inch)	**1 8**
2 001 ... 2 250 mm (78.78 ... 88.58 inch)	**2 1**
2 251 ... 2 500 mm (88.62 ... 98.43 inch)	**2 2**
2 501 ... 2 750 mm (98.46 ... 108.27 inch)	**2 3**
2 751 ... 3 000 mm (108.31 ... 118.11 inch)	**2 4**
3 001 ... 3 250 mm (118.15 ... 127.95 inch)	**2 5**
3 251 ... 3 500 mm (127.99 ... 137.80 inch)	**2 6**
3 501 ... 3 750 mm (137.83 ... 147.64 inch)	**2 7**
3 751 ... 4 000 mm (147.68 ... 157.48 inch)	**2 8**

© Siemens 2020

Selection and ordering data

	Article No.
SITRANS LVS200 Vibrating fork point level switch, short fork and interface design	**7ML5732-**
Level and material detection in dry bulk solids or solids interface within a liquid. Extension options to 4 m (13.12 ft). With advanced testing, output, and durability options.	■ ■ ■ ■ ■ - ■ ■ **A 0**
Stainless steel 316L (1.4404)	
Standard length, 165 mm (6.50 inch)	**3 1**
Add Order code Y01 and plain text: "Insertion length ... mm"	
200 ... 500 mm (7.87 ... 19.69 inch)	**3 2**
501 ... 750 mm (19.72 ... 29.53 inch)	**3 3**
751 ... 1 000 mm (29.57 ... 39.37 inch)	**3 4**
1 001 ... 1 250 mm (39.41 ... 49.21 inch)	**3 5**
1 251 ... 1 500 mm (49.25 ... 59.06 inch)	**3 6**
1 501 ... 1 750 mm (59.09 ... 68.90 inch)	**3 7**
1 751 ... 2 000 mm (68.94 ... 78.74 inch)	**3 8**
2 001 ... 2 250 mm (78.78 ... 88.58 inch)	**4 1**
2 251 ... 2 500 mm (88.62 ... 98.43 inch)	**4 2**
2 501 ... 2 750 mm (98.46 ... 108.27 inch)	**4 3**
2 751 ... 3 000 mm (108.31 ... 118.11 inch)	**4 4**
3 001 ... 3 250 mm (118.15 ... 127.95 inch)	**4 5**
3 251 ... 3 500 mm (127.99 ... 137.80 inch)	**4 6**
3 501 ... 3 750 mm (137.83 ... 147.64 inch)	**4 7**
3 751 ... 4 000 mm (147.68 ... 157.48 inch)	**4 8**
Material process connection/extension	
Stainless steel threads 304 (1.4301), flanges 321 (1.4541), Tri-clamp 304 (1.4301)[4]	**1**
Stainless steel 316L (1.4404)[5]	**2**
Approvals	
CSA/FM Dust Ignition Proof, RCM	**A**
ATEX II ½ D, RCM	**B**
CSA/FM General Purpose, RCM, CE	**C**
CE, RCM	**D**
IEC-Ex t IIIC Da/Db	**E**
ATEX II 1G and ½G Eex ia IIC; ATEX II 1D and ½D, CE, RCM	**F**
EAC Ex ta/tb IIIC Da/Db, Ex ta IIIC Da	**G**
EAC Ex Ga/Gb Ex ia IIC, 0Ex ia IIC Ga; Ex ta/tb IIIC Da/Db, Ex ta IIIC Da	**H**

1) Available with Approval options B, D, E only.
2) Not available with extension length options 11, 12, 31, 32.
3) Max. 6 bar (87 psi).
4) Available with extension length options 11 ... 28.
5) Available with extension length options 31 … 48.
6) Power supply options 1, 2, 3, 4 not allowed with Approvals options F and H.

	Article No.
Further Designs	Order code
Please add "**-Z**" to Article No. and specify Order code(s).	
Factory test certificate - M to DIN 55350, Part 18	**C11**
Total insertion length: Enter the total insertion length in plain text description, max. 4 000 mm (147.48 inch)	**Y01**
Stainless steel tag [100 x 45 mm (3.94 x 1.77 inch)]: Measuring-point number/identification (max. 27 characters); specify in plain text	**Y14**
Signal bulb inserted in M20 cable gland[1)3)]	**A20**
Note: G02 must be ordered for solids/liquids interface detection.	
Adjustable sensitivity (by potentiometer) for solids/liquids interface detection[1)2)4)]	**G02**
Operating Instructions	
All literature is available to download for free, in a range of languages, at	
http://www.siemens.com/processinstrumentation/documentation	
Spare Parts	Article No.
Replacement Electronics Module (125 Hz) [19 ... 230 V AC, 19 ... 55 V DC, two relay output (DPDT)]	**A5E35525363**
Replacement Electronics Module (350 Hz) [19 ... 230 V AC, 19 ... 55 V DC, one relay output (SPDT)]	**7ML1830-1KM**
Sliding sleeve, 2" BSP (ISO 228)	**7ML1830-1JM**
Sliding sleeve, 2" NPT (ASME B1.20.1)	**7ML1830-1JN**

1) Available with Approval option D only.
2) Available with power supply option 1 only.
3) A20 not allowed with power supply options 4 or 5.
4) G02 not allowed with process temperature options C or D.

© Siemens 2020

Selection and ordering data

	Article No.
SITRANS LVS200 Vibrating fork point level switch, pipe extension design ↗	**7ML5733-** ■ ■ ■ ■ ■ - ■ ■ **A 0**
Level and material detection in dry bulk solids. Requires customer supplied pipe extension with insertion to 3.8 m (12.47 ft). With advanced testing, output, and durability options.	
↗ Click on the Article No. for the online configuration in the PIA Life Cycle Portal.	
Power supply	
19 ... 230 V AC, 19 ... 55 V DC, one relay output (SPDT)[1]	**1**
19 ... 230 V AC, 19 ... 55 V DC, two relay outputs (DPDT)[1]	**2**
18 ... 50 V DC PNP[1]	**3**
19 ... 230 V AC/DC without contact, 2-wire loop powered[1]	**4**
7 ... 9 V DC (requires NAMUR switch amplifier) NAMUR IEC 60947-5-6, 2-wire[2]	**5**
8/16 mA or 4 ... 20 mA; 12.5 ... 35 V DC, 2-wire[3]	**6**
Process temperature	
Up to 150 °C (302 °F)	**A**
Process connection	
Threaded	
R 1½" [(BSPT), EN 10226]	**A**
1½" NPT [(Taper), ANSI/ASME B1.20.1]	**B**
Flanged	
DN 100 PN 6, EN 1092-1, flat face[4]	**C**
DN 100 PN 16, EN 1092-1, flat face	**D**
2" ASME 150 lb B16.5, raised face	**E**
3" ASME 150 lb B16.5, raised face	**F**
4" ASME 150 lb B16.5, raised face	**G**
2" Tri-clamp (DN 50) ISO 2852	**K**
Process connection material	
Stainless steel threads 304 (1.4301), flanges 321(1.4541), Tri-clamp 304 (1.4301)	**1**
Stainless steel 316L (1.4404)	**2**
Extension length	
Customer supplied 1" pipe extension Length: 300 ... 3 800 mm (11.81 ... 149.61 inch)	**1**
Application type	
Dry bulk solids (125 Hz)	**1**
Liquids/solids interface (350 Hz)	**2**
Approvals	
CSA/FM Dust Ignition Proof, RCM	**A**
ATEX II ½D, RCM	**B**
CSA/FM General Purpose, RCM, CE	**C**
CE, RCM	**D**
CSA/FM IS Class I, II, III Div. 1, Groups A, B, C, D, E, F, G, FM Class I, Aex ia IIC, CSA Class I, Ex ia IIC, RCM	**E**
ATEX II 1G and ½G Eex ia IIC; ATEX II 1D and ½D, RCM	**F**
IEC-Ex t IIIC Da/Db	**G**
EAC Ex ta/tb IIIC Da/Db, Ex ta IIIC Da	**H**
EAC Ex Ga/Gb Ex ia IIC, 0Ex ia IIC Ga; Ex ta/tb IIIC Da/Db, Ex ta IIIC Da	**J**

1) Available with Approval options A, B, C, D, G only.
2) Available with Approval options D, E, F, J and application type 1 only.
3) Available with Approval options B, D, F, G, H only.
4) Max. 6 bar (87 psi).

	Order code
Further Designs	
Please add "**-Z**" to Article No. and specify Order code(s).	
Factory test certificate - M to DIN 55350, Part 18	**C11**
Total insertion length: Enter the total insertion length in plain text description, max. 3 800 mm (149.61 inch)	**Y01**
Stainless steel tag [100 x 45 mm (3.94 x 1.77 inch)]: Measuring-point number/identification (max. 27 characters); specify in plain text	**Y14**
Enhanced sensitivity > 5 g/l via electronics and increased insertion length of 25 mm (0.98 inch)[5]	**K05**
Enhanced sensitivity < 5 g/l via electronics, increased insertion length of 25 mm (0.98 inch) and increased aluminum fork width[1)4)5)]	**G01**
Adjustable sensitivity (by potentiometer) for solids/liquids interface detection[2)3)4)]	**G02**
Signal bulb inserted in M20 cable gland[2)6)]	**A20**
Operating Instructions	
All literature is available to download for free, in a range of languages, at	
http://www.siemens.com/processinstrumentation/documentation	
Spare Parts	Article No.
Replacement Electronics Module (125 Hz) [19 ... 230 V AC, 19 ... 55 V DC, one relay output (SPDT)]	**7ML1830-1KL**
Replacement Electronics Module (125 Hz) [19 ... 230 V AC, 19 ... 55 V DC, two relay output (DPDT)]	**A5E35525363**
Replacement Electronics Module (350 Hz) [19 ... 230 V AC, 19 ... 55 V DC, one relay output (SPDT)]	**7ML1830-1KM**
NAMUR Isolated switch amplifier Relay output KFD2-SR2-Ex1.W	**A5E35667901**

1) Available only with power supply option 1 and Approvals options C, D, and with Process connection flange options C … G.
2) Available with Approval options D only.
3) Available with Power supply option 1 only and application type option 2.
4) Not available with option K05.
5) Available with Application type option 1 only.
6) A20 not allowed with Power supply options 4, 5, and 6.

© Siemens 2020

Selection and ordering data

	Article No. 7ML5734-									
SITRANS LVS200 Vibrating fork point level switch, cable extended design ↗	■	■	■	■	■	-	■	■	A	0
Level and material detection in dry bulk solids. Extension options to 20 m (65.62 ft). With advanced testing, output, and durability options. Measures bulk densities less than 5 g/l (0.3 lb/ft³).										
↗ Click on the Article No. for the online configuration in the PIA Life Cycle Portal.										
Power supply										
19 ... 230 V AC, 19 ... 55 V DC, one relay output (SPDT)[1]	1									
19 ... 230 V AC, 19 ... 55 V DC, two relay outputs (DPDT)[1]	2									
18 ... 50 V DC PNP[1]	3									
19 ... 230 V AC/DC without contact, 2-wire loop powered[1]	4									
7 ... 9 V DC (requires NAMUR switch amplifier) NAMUR IEC 60947-5-6, 2-wire[2][5]	5									
8/16 mA or 4 ... 20 mA; 12.5 ... 35 V DC, 2-wire[3]	6									
Process temperature										
Up to 80 °C (176 °F)		A								
Process connection										
Threaded										
R 1½" [(BSPT), EN 10226] (1.4301/304)			A							
1½" NPT [(Taper), ANSI/ASME B1.20.1] (1.4301/304)			B							
Flanged										
DN 100 PN 6, EN 1092-1 (1.4541/321), flat face[4]			C							
DN 100 PN 16, EN 1092-1 (1.4541/321), flat face			D							
2" ASME 150 lb B16.5 (1.4541/321), raised face			E							
3" ASME 150 lb B16.5 (1.4541/321), raised face			F							
4" ASME 150 lb B16.5 (1.4541/321), raised face			G							
Extension length										
750 ... 1 000 mm (29.5 ... 39.4 inch) [max. length 20 000 mm (787.4 inch), not with Power supply option 5 (max. 10 000 mm, 393.7 inch)][8]				1	0					
Add Order code Y01 and plain text: "Insertion length ... mm"										
1 001 ... 2 000 mm (39.41 ... 78.74 inch)				1	1					
2 001 ... 3 000 mm (78.78 ... 118.11 inch)				1	2					
3 001 ... 4 000 mm (118.15 ... 157.48 inch)				1	3					
4 001 ... 5 000 mm (157.52 ... 196.85 inch)				1	4					
5 001 ... 6 000 mm (196.89 ... 236.22 inch)				1	5					
6 001 ... 7 000 mm (236.26 ... 275.59 inch)				1	6					
7 001 ... 8 000 mm (275.63 ... 314.96 inch)[5]				1	7					
8 001 ... 9 000 mm (315 ... 354.33 inch)[5]				1	8					
9 001 ... 10 000 mm (354.37 ... 393.70 inch)[5]				2	0					
10 001 ... 11 000 mm (393.74 ... 433.07 inch)[5][6]				2	1					
11 001 ... 12 000 mm (433.11 ... 472.44 inch)[5][6]				2	2					
12 001 ... 13 000 mm (472.48 ... 511.81 inch)[5][6]				2	3					
13 001 ... 14 000 mm (511.85 ... 551.18 inch)[5][6]				2	4					
14 001 ... 15 000 mm (551.22 ... 590.55 inch)[5][6]				2	5					
15 001 ... 16 000 mm (590.59 ... 629.92 inch)[5][6]				2	6					
16 001 ... 17 000 mm (629.96 ... 669.29 inch)[5][6]				2	7					
17 001 ... 18 000 mm (669.33 ... 708.66 inch)[5][6]				2	8					
18 001 ... 19 000 mm (708.70 ... 748.03 inch)[5][6]				3	0					
19 001 ... 20 000 mm (748.07 ... 787.40 inch)[5][6]				3	1					
Application type										
Dry bulk solids (125 Hz)						1				
Liquids/solids interface detection, short insertion or heavier materials (350 Hz)[7]						2				

	Article No. 7ML5734-									
SITRANS LVS200 Vibrating fork point level switch, cable extended design	■	■	■	■	■	-	■	■	A	0
Level and material detection in dry bulk solids. Extension options to 20 m (65.62 ft). With advanced testing, output, and durability options. Measures bulk densities less than 5 g/l (0.3 lb/ft³).										
Approvals										
CSA/FM Dust Ignition Proof, RCM								A		
ATEX II ½D, RCM								B		
CSA/FM General Purpose, RCM, CE								C		
CE, RCM								D		
CSA/FM IS Class I, II, III Div. 1, Groups A, B, C, D, E, F, G, FM Class I, Aex ia IIC, CSA Class I, Ex ia IIC, RCM								E		
ATEX II 1G and ½G Eex ia IIC; ATEX II 1D and ½D, RCM[6]								F		
IEC-Ex t IIIC Da/Db								G		
EAC Ex ta/tb IIIC Da/Db, Ex ta IIIC Da								H		
EAC Ex Ga/Gb Ex ia IIC, 0Ex ia IIC Ga; Ex ta/tb IIIC Da/Db, Ex ta IIIC Da								J		

1) Available with Approval options A, B, C, D, G only.
2) Available with Approval options D, E, and F only. Not available for Application type option 2.
3) Available with Approval option D only.
4) Max. 6 bar (87 psi).
5) Not available with Application type option 2.
6) Not available with Power supply option 5.
7) Cable length is limited to 7 000 mm (275.59 inch).
8) Available with Power supply options 1 … 4, and 6.

© Siemens 2020

Selection and ordering data

	Order code
Further Designs	
Please add "**-Z**" to Article No. and specify Order code(s).	
Factory test certificate - M to DIN 55350, Part 18	**C11**
Enter the total insertion length in plain text description, max. 20 000 mm (787.40 inch)	**Y01**
Stainless steel tag [100 x 45 mm (3.94 x 1.77 inch)]: Measuring-point number/identification (max. 27 characters); specify in plain text	**Y14**
Enhanced sensitivity > 5 g/l via electronics and increased insertion length of 25 mm (0.98 inch)[5]	**K05**
Enhanced sensitivity < 5 g/l via electronics and increased insertion length of 25 mm (0.98 inch) and increased aluminum fork width[1][4]	**G01**
Adjustable sensitivity (by potentiometer) for solids/liquids interface detection[2][3][4]	**G02**
Signal bulb inserted in M20 cable gland[2][6]	**A20**

	Article No.
Operating Instructions	
All literature is available to download for free, in a range of languages, at	
http://www.siemens.com/processinstrumentation/documentation	
Spare Parts	
Replacement Electronics Module (125 Hz) [19 ... 230 V AC, 19 ... 55 V DC, one relay output (SPDT)]	**7ML1830-1KL**
Replacement Electronics Module (125 Hz) [19 ... 230 V AC, 19 ... 55 V DC, two relay output (DPDT)]	**A5E35525363**
Replacement Electronics Module (350 Hz) [19 ... 230 V AC, 19 ... 55 V DC, one relay output (SPDT)]	**7ML1830-1KM**
NAMUR Isolated switch amplifier Relay output KFD2-SR2-Ex1.W	**A5E35667901**

1) Available only with power supply option 1 and Approvals C, D, and with process connection flange options C … G.
2) Available with Approval options D only.
3) Available with Power supply option 1 and Application type 2 option only.
4) Not available with option K05.
5) Available with Application type option 1 only.
6) A20 not allowed with Power supply options 4, 5, or 6.

© Siemens 2020

Dimensional drawings

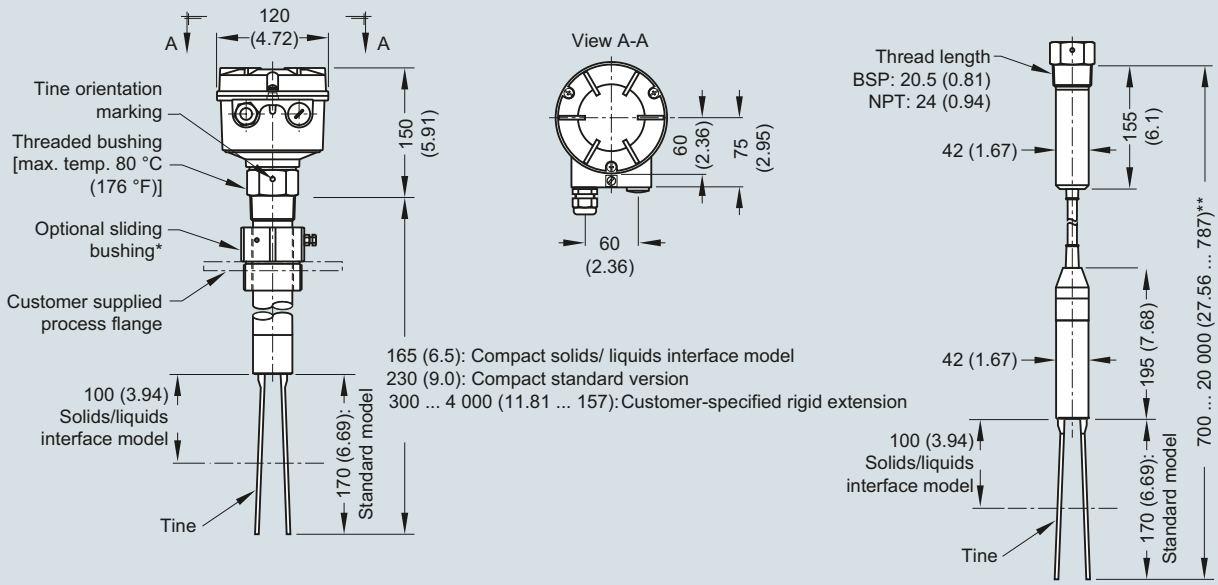

Notes:

* The clamping screws of the sliding bushing must be tightened to 10 Nm.
** Cable version with liquids/solids interface model option length to 7 000 mm (275.59 inch)
Cable version with NAMUR electronics length to 10 000 mm (393.7 inch) tightened to 10 Nm.
See manual for pipe extended version details. (Pipe is customer supplied.)

SITRANS LVS200, dimensions in mm (inch)

© Siemens 2020

Circuit diagrams

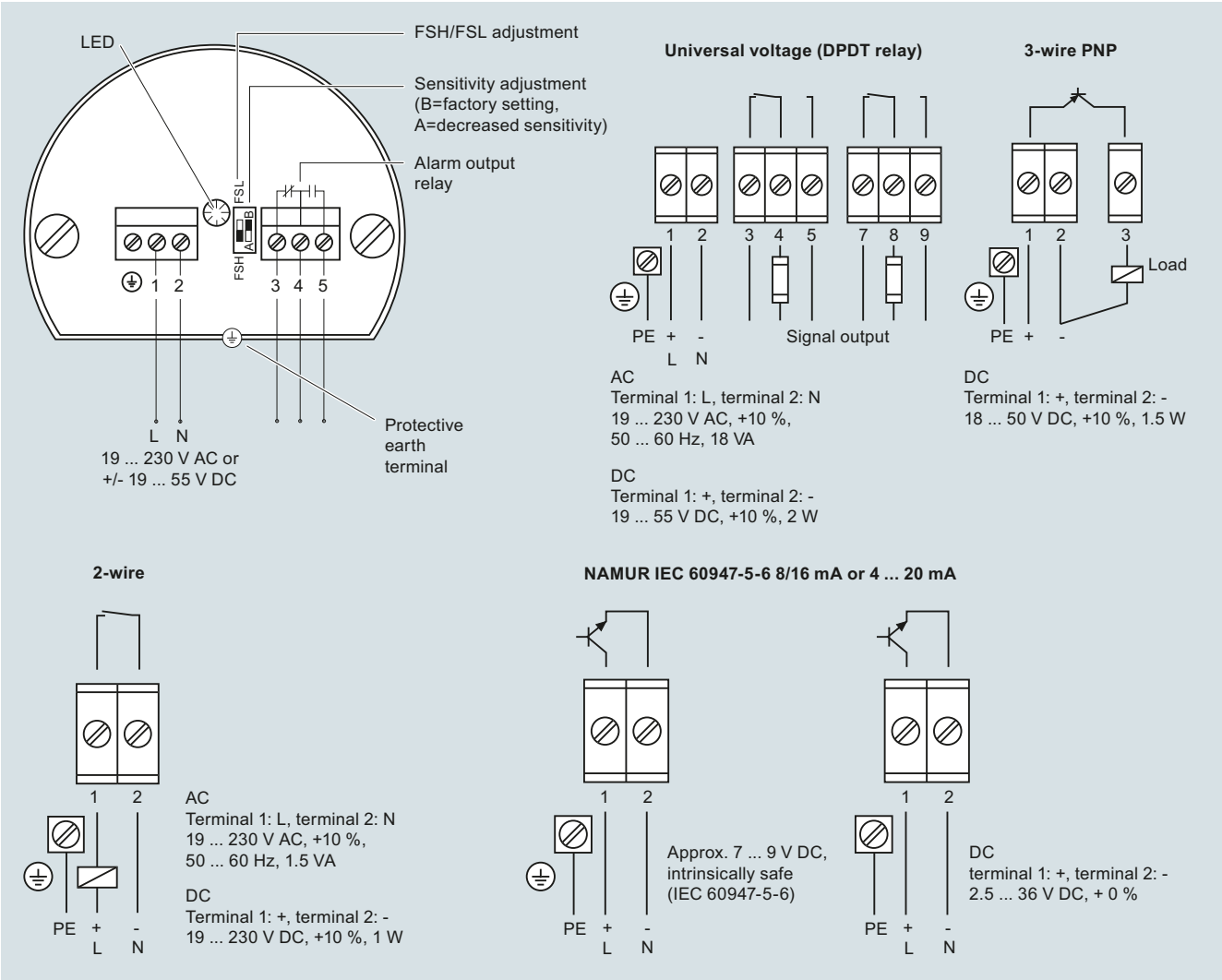

SITRANS LVS200 connections

© Siemens 2020

Overview

SITRANS LVS300 is a vibrating rod point level switch for high, low, or demand level detection of bulk solids.

Benefits

- High resistance to mechanical forces.
- Adjustable sensitivity for varied applications including build-up.
- Rotatable enclosure for convenient wiring.
- Suitable for low density material: standard version, 20 g/l (1.3 lb/ft^3).
- Customer desired extensions up to 4 000 mm (157 inch).
- 160 mm (6.3 inch) insertion length.
- Flexible, customer supplied, rods to 4 meters.
- Process connections starting at 1 inch.

Application

The standard LVS300 detects high, low, or demand levels of dry bulk solids in bins, silos, or hoppers.

A pipe extension version is available, separated by a customer supplied 1 inch pipe.

The LVS300 has a compact design and can be top, side or angle mounted. The vibrating rod design ensures the product will not be impacted by bridging of traditional forks in applications with buildup potential. A durable probe design ensures the product will withstand heavier materials without damage or bending.

A signal from the electronic circuit excites a crystal in the probe causing the rod to vibrate. If the rod is covered by material, the change in vibration is detected by the electronic circuitry which causes the output to change state after a one second delay. When the probe is free from material, full vibration resumes and the relay reverts to its normal condition.

- Key Applications: dry or bulk solids with buildup potential, in bins, silos, or hoppers, such as lime, molding sand, milk powder, flour, salt, and plastic granules.

© Siemens 2020

Technical specifications

Mode of operation	
Measuring principle	Vibrating point level switch
Input	
Measured variable	High, low, and demand
Measuring frequency • Standard	 330 Hz
Output	
PNP	Open collector: Permanent load max. 0.4 A, short-circuit and overload protected (reverse protection)
Relay	DPDT relay
Signal delay	• Probe uncovered to covered: approximately 1 second • Probe covered to uncovered: approximately 1 ... 2 seconds
Relay fail-safe	High or low, switch selectable
Alarm output	• Relay 8 A at 250 V AC, non-inductive • Relay 5 A at 30 V DC, non-inductive
Sensitivity	Four sensitivity settings, switch selectable

Rated operating conditions	
Installation conditions • Location	 Indoor/outdoor
Ambient conditions • Ambient temperature • Storage temperature • Installation category • Pollution degree	 -40 ... +60 °C (-40 ... +140 °F) -40 ... +80 °C (-40 ... +176 °F) II 2
Medium conditions • Process temperature • Pressure (vessel) • Minimum material density	 -40 ... +150 °C (-40 ... +302 °F) Max. 16 bar g (232 psi g) European Pressure Directive 2014/68/EU: Category 1 Approx. 20 g/l (1.2 lb/ft^3)
Design	
Material • Enclosure	 Aluminum powder coat
Process connection	• G 1", G 1 1/4", G 1 1/2" DIN 228; NPT 1", NPT 1 1/4", NPT 1 1/2" ANSI B 1.20.1 • Flange: according to selection 1.4541 (321) or 1.4404 (316L) • Tri-clamp: stainless steel 1.4301 (304) or 1.4404 (316L) • 2" (DN 50) ISO 2852
Probe material	• Oscillator material: stainless steel 1.4404 (316L) • Stainless steel 1.4301 (304)/1.4541 (321) or 1.4404 (316L) (process connection and tube extension)
Degree of protection	IP67 (EN 60529), NEMA Type 4X
Conduit entry	2 x M20 x 1.5 or 2 x ½" NPT
Weight	• Standard version: 1.3 kg (2.9 lb) +1.3 kg/m (+2.9 lb per 39.3 inch) extension • Customer supplied pipe: 1.8 kg (4.0 lb) +1.3 kg/m (+2.9 lb per 39.3 inch) extension
Power supply	• Relay DPDT 21 ... 230 V, 50 ... 60 Hz, ± 10 %* 22 VA, 22 ... 45 V DC, ± 10 %* 2W *incl. ± 10 % of EN 61010 • 3-wire PNP 20 ... 40 V DC, ± 10 %* *incl. ± 10 % of EN 61010
Certificates and approvals	CE, ATEX, FM

© Siemens 2020

Selection and ordering data

	Article No.	Order code
SITRANS LVS300 Vibrating rod point level switch, compact design ↗ Level and material detection in solids. Compact, with 160 mm (6.30 inch) insertion. ↗ Click on the Article No. for the online configuration in the PIA Life Cycle Portal.	**7ML5736-** ■■■■■-■■	
Power supply		
Relays DPDT 21 ... 230 V AC 22 ... 45 V DC	**1**	
PNP 20 ... 40 V DC	**2**	
Process temperature		
Without temperature isolator [up to Tprocess = 150 °C (302 °F) at Tamb < 40 °C (104 °F)]	**A**	
With temperature isolator [up to Tprocess = 150 °C (302 °F) at Tamb > 40 °C (104 °F)]	**B**	
Process connection		
Threaded		
Thread G 1½" (BSPP) EN ISO 228-1	**A**	
Thread G 1¼" (BSPP) EN ISO 228-1	**B**	
Thread G 1" (BSPP) EN ISO 228-1	**C**	
Thread NPT 1½" (Taper) ANSI B1.20.1	**D**	
Thread NPT 1¼" (Taper) ANSI B1.20.1	**E**	
Thread NPT 1" (Taper) ANSI B1.20.1	**F**	
Tri-clamp 2" (DN50) ISO 2852	**G**	
Flanged		
Flange DN 100 PN6, EN1092-1[1]	**H**	
Flange DN 100 PN16, EN1092-1	**J**	
2" ASME 150 lb B16.5	**K**	
3" ASME 150 lb B16.5	**L**	
4" ASME 150 lb B16.5	**M**	
Extension length		
Standard length, 160 mm (6.3 inch)	**11**	
Material process connection/extension		
Stainless steel threads 304 (1.4301), flanges 321 (1.4541), Tri-clamp 304 (1.4301)	**1**	
Stainless steel 316 L (1.4404)	**2**	
Approvals		
CE	**A**	
ATEX II 1/2D Ex ta/tb IIIC TI Da/Db IP6X	**B**	
FM_{US} and FM_C General Purpose	**C**	
FM_{US} and FM_C DIP Class II, III Div.1 Groups E, F, G	**D**	

	Order code
Further designs Please add "**-Z**" to Article No. and specify Order code(s).	
Stainless steel tag [(70 mm x 13 mm (2.76 x 0.51 inch)]: Measuring-point number/identification (max. 27 characters) specify in plain text	**Y14**
Signal bulb inserted in M20 cable gland[2]	**A20**
Factory test certificate - M to DIN 55350, Part 18	**C11**
Operating Instructions All literature is available to download for free, in a range of languages, at https://intranet.entry.siemens.com	

[1] Max. 6 bar (87 psi).

[2] Available only with Approval option A.

© Siemens 2020

Selection and ordering data

	Article No.
SITRANS LVS300 Vibrating rod point level switch, pipe extended design ↗	**7ML5737-** ■■■■■ - ■■
Level and material detection in solids. Extension options up to 4 m (13.12 ft).	
↗ Click on the Article No. for the online configuration in the PIA Life Cycle Portal.	
Power supply	
Relays DPDT 21 ... 230 V AC 22 ... 45 V DC	1
PNP 20 ... 40 V DC	2
Process temperature	
Without temperature isolator [up to Tprocess = 150 °C (302 °F) at Tamb < 40 °C (104 °F)]	A
With temperature isolator [up to Tprocess = 150 °C (302 °F) at Tamb > 40 °C (104 °F)]	B
Process connection	
Threaded	
Thread G 1½" (BSPP) EN ISO 228-1	A
Thread G 1¼" (BSPP) EN ISO 228-1	B
Thread G 1" (BSPP) EN ISO 228-1	C
Thread NPT 1½" (Taper) ANSI B1.20.1	D
Thread NPT 1¼ " (Taper) ANSI B1.20.1	E
Thread NPT 1" (Taper) ANSI B1.20.1	F
Tri-clamp 2" (DN50) ISO 2852	G
Flanged	
Flange DN 100 PN6, EN1092-1[1]	H
Flange DN 100 PN16, EN1092-1	J
2" ASME 150 lb B16.5	K
3" ASME 150 lb B16.5	L
4" ASME 150 lb B16.5	M
Extension length	
Extension length Stainless steel threads 304 (1.4301), flanges 321 (1.4541)	
200 ... 500 mm (7.87 ... 19.69 inch)	1 2
501 ... 750 mm (19.72 ... 29.53 inch)	1 3
751 ... 1 000 mm (29.57 … 39.37 inch)	1 4
1 001 ... 1 250 mm (39.41 ... 49.21 inch)	1 5
1 251 ... 1 500 mm (49.25 ... 59.06 inch)	1 6
1 501 ... 1 750 mm (59.09 … 68.90 inch)	1 7
1 751 ... 2 000 mm (68.94 ... 78.74 inch)	1 8
2 001 ... 2 250 mm (78.78 ... 88.58 inch)	2 1
2 251 ... 2 500 mm (88.62 ... 98.43 inch)	2 2
2 501 ... 2 750 mm (98.46 ... 108.27 inch)	2 3
2 751 ... 3 000 mm (108.31 ... 118.11 inch)	2 4
3 001 ... 3 250 mm (118.15 ... 127.95 inch)	2 5
3 251 ... 3 500 mm (127.99 ... 137.80 inch)	2 6
3 501 ... 3 750 mm (137.83 ... 147.64 inch)	2 7
3 751 ... 4 000 mm (147.68 ... 157.48 inch)	2 8
Extension length Stainless steel 316 L (1.4404)	
200 ... 500 mm (7.87 ... 19.69 inch)	4 2
501 ... 750 mm (19.72 ... 29.53 inch)	4 3
751 ... 1 000 mm (29.57 … 39.37 inch)	4 4
1 001 ... 1 250 mm (39.41 ... 49.21 inch)	4 5
1 251 ... 1 500 mm (49.25 ... 59.06 inch)	4 6
1 501 ... 1 750 mm (59.09 … 68.90 inch)	4 7
1 751 ... 2 000 mm (68.94 ... 78.74 inch)	4 8
2 001 ... 2 250 mm (78.78 ... 88.58 inch)	5 1
2 251 ... 2 500 mm (88.62 ... 98.43 inch)	5 2
2 501 ... 2 750 mm (98.46 ... 108.27 inch)	5 3
2 751 ... 3 000 mm (108.31 ... 118.11 inch)	5 4
3 001 ... 3 250 mm (118.15 ... 127.95 inch)	5 5
3 251 ... 3 500 mm (127.99 ... 137.80 inch)	5 6
3 501 ... 3 750 mm (137.83 ... 147.64 inch)	5 7
3 751 ... 4 000 mm (147.68 ... 157.48 inch)	5 8
Material process connection/extension	
Stainless steel threads 304 (1.4301), flanges 321 (1.4541), Tri-clamp 304 (1.4301)[2]	1
Stainless steel 316 L (1.4404)[3]	2
Approvals	
CE	A
ATEX II 1/2D Ex ta/tb IIIC T! Da/Db IP6X	B
FM_{US} and FM_C General Purpose	C
FM_{US} and FM_C DIP Class II, III Div.1, Groups E, F, G	D

	Order code
Further designs	
Please add "**-Z**" to Article No. and specify Order code(s).	
Enter the total insertion length in plain text description, max. 4 000 mm (157.48 inch)	**Y01**
Stainless steel tag [(70 mm x 13 mm (2.76 x 0.51 inch)]: Measuring-point number/identification (max. 27 characters) specify in plain text	**Y14**
Signal bulb inserted in M20 cable gland[4]	**A20**
Sliding sleeve, for application without overpressure max. 150 °C (302 °F), min. length 501 mm (19.72 inch)[5][6][7]	**P12**
Sliding sleeve, for application with overpressure, max. 16 bar (232 psi), max. 150 °C (302 °F), min. length 501 mm (19.72 inch)[6]	**P13**
Factory test certificate - M to DIN 55350, Part 18	**C11**
Operating Instructions	
All literature is available to download for free, in a range of languages, at	
http://www.siemens.com/processinstrumentation/documentation	
Spare parts	
Replacement Electronics Modules are available. Contact factory for pricing.	

[1] Max. 6 bar (87 psi).
[2] Available with extension length 12.
[3] Available with extension length 42.
[4] Available only with Approval option A.
[5] Available only with Approval options A and C.
[6] Available only with Process connection options A, D, H, J, K, L, M, not available with extension length 12 and 42.
[7] Available only with Material Process connection/extension option 1.

© Siemens 2020

Selection and ordering data

	Article No.									Order code
SITRANS LVS300 Vibrating rod point level switch, customer supplied tube ↗ Level and material detection in solids. Requires flexible, customer supplied, pipe extensions with insertion to 4 m (13.12 ft). ↗ Click on the Article No. for the online configuration in the PIA Life Cycle Portal.	**7ML5738-**									
	■	■	■	■	■	-	■	■		
Power supply										
Relays DPDT 21 ... 230 V AC 22 ... 45 V DC	**1**									
PNP 20 ... 40 V DC	**2**									
Process temperature										
Without temperature isolator [up to Tprocess = 150 °C (302 °F) at Tamb < 40 °C (104 °F)]		**A**								
Process connection										
Threaded										
Thread G 1½" (BSPP) EN ISO 228-1			**A**							
Thread NPT 1½" (Taper) ANSI B1.20.1			**D**							
Tri-clamp 2" (DN50) ISO 2852			**G**							
Flanged										
Flange DN 100 PN6, EN1092-1[1]			**H**							
Flange DN 100 PN16, EN1092-1			**J**							
2" ASME 150 lb B16.5			**K**							
3" ASME 150 lb B16.5			**L**							
4" ASME 150 lb B16.5			**M**							
Extension length										
1 500 mm (59 inch), adjustable cable length				**1**	**1**					
4 000 mm (157 inch), adjustable cable length				**1**	**2**					
Material process connection/extension										
Stainless steel threads 304 (1.4301), flanges 321 (1.4541), Tri-clamp 304 (1.4301)							**1**			
Stainless steel 316 L (1.4404)							**2**			
Approvals										
CE								**A**		
ATEX II 1/2D Ex ta/tb IIIC T! Da/Db IP6X								**B**		
FM_{US} and FM_C General Purpose								**C**		
FM_{US} and FM_C DIP Class II, III Div.1, Groups E, F, G								**D**		

	Order code
Further designs	
Please add "**-Z**" to Article No. and specify Order code(s).	
Stainless steel tag [(70 mm x 13 mm (2.76 x 0.51 inch)]: Measuring-point number/identification (max. 27 characters) specify in plain text	**Y14**
Signal bulb inserted in M20 cable gland[2]	**A20**
Factory test certificate - M to DIN 55350, Part 18	**C11**
Operating Instructions	
All literature is available to download for free, in a range of languages, at	
http://www.siemens.com/processinstrumentation/documentation	
Spare parts	
Replacement Electronics Modules are available. Contact factory for pricing.	

[1] Max. 6 bar (87 psi).

[2] Available only with Approval option A.

© Siemens 2020

Dimensional drawings

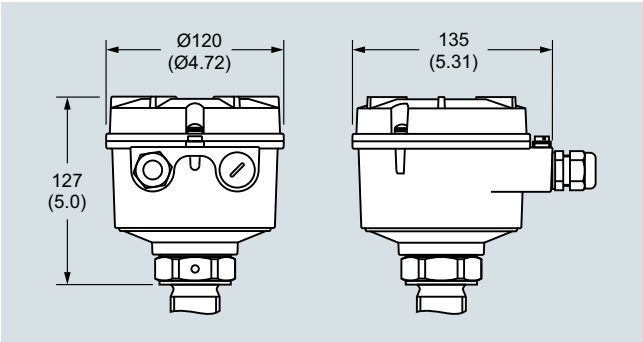

SITRANS LVS300 enclosure, dimensions in mm (inch)

© Siemens 2020

Dimensional drawings

Compact version

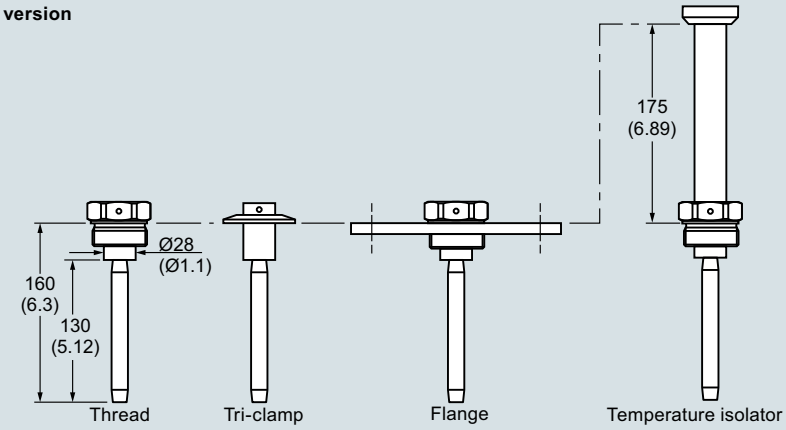

Pipe extension

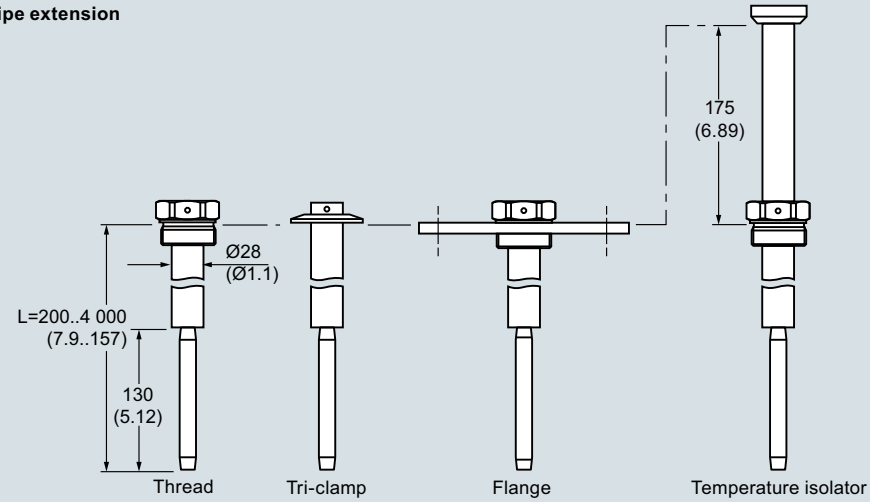

Pipe extension - customer mounted

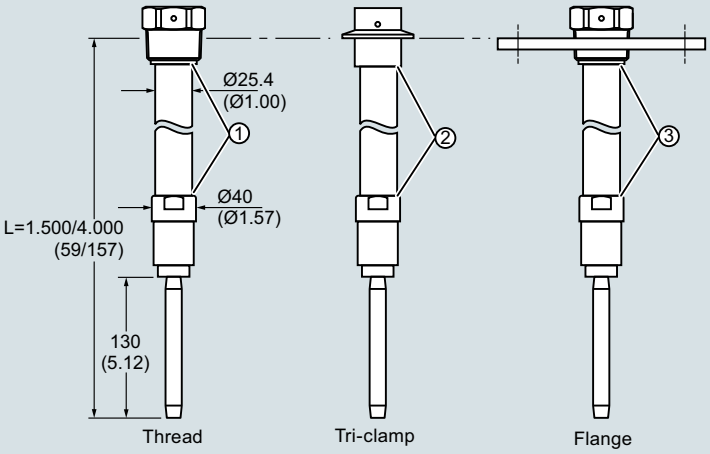

	Approval	Process connection	Thread on extension pipe
①	CE, ATEX	G 1½"	R 1"
	FM	NPT 1½"	NPT 1"

	Approval	Thread on extension pipe
②	CE, ATEX	R 1"
	FM	NPT 1"

	Approval	Process connection	Thread on extension pipe
③	CE, ATEX	Flange DN	R 1"
		Flange ANSI	NPT 1"
	FM	Flange DN Flange ANSI	NPT 1"

SITRANS LVS300, dimensions in mm (inch)

© Siemens 2020

Circuit diagrams

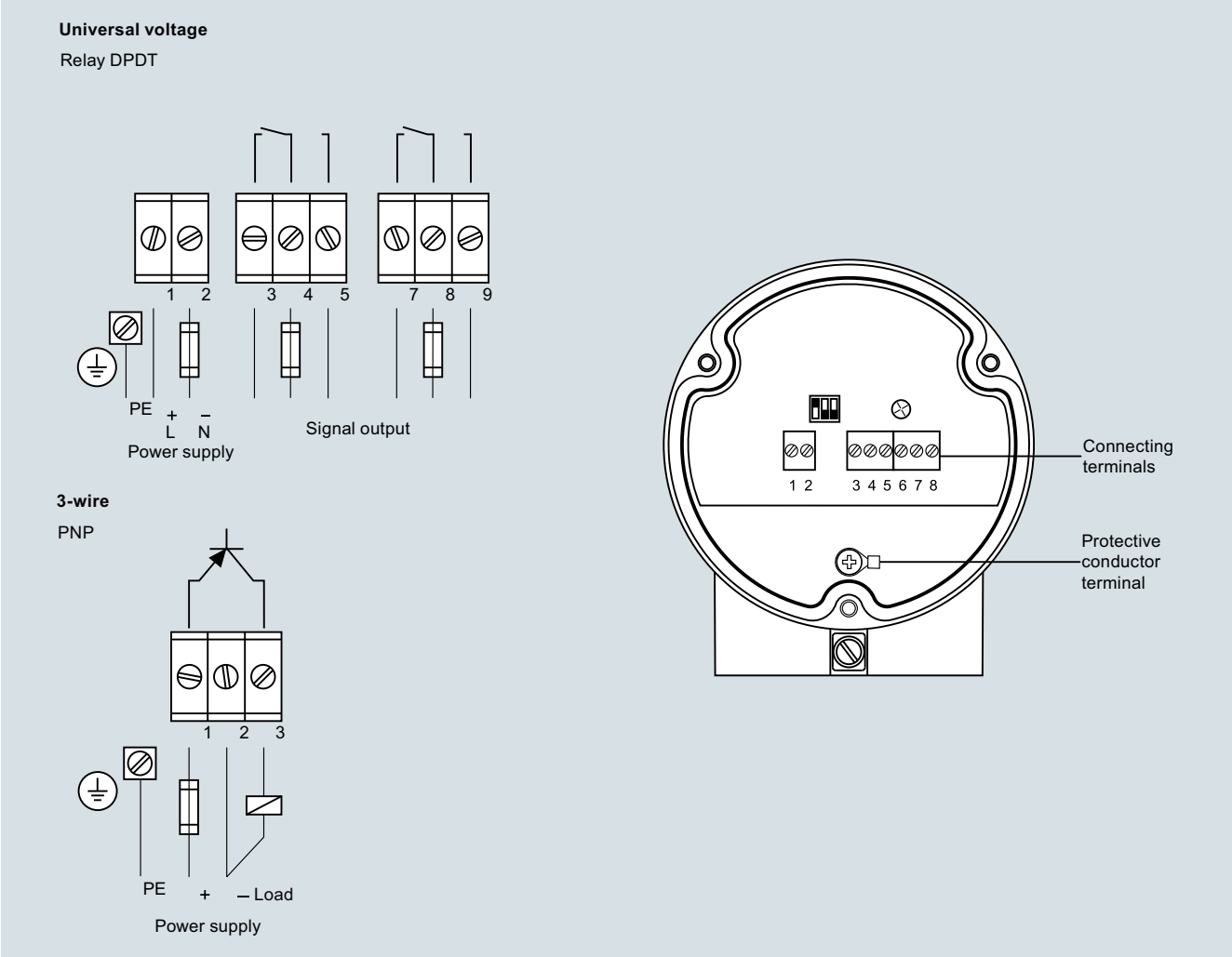

SITRANS LVS300 connections

© Siemens 2020

Overview

SITRANS LPS200 is a rotary paddle switch for point level and material detection in bulk solids.

Benefits

- Proven paddle switch technology for bulk solids
- High integrity mechanical seal
- Universal power supply options available
- Unique friction clutch mechanism prevents damage from falling material
- Rotatable enclosure for convenient wiring
- Optional paddles for use with low density materials
- Small paddle makes for simple installation through existing process connection
- High temperature model and optional extension kit available
- Optional fail-safe configuration detects loss of rotation
- Functional Safety (SIL 2). Device suitable for use in -accordance with IEC 61508 and IEC 61511

Application

The paddle switch technology detects full, empty, or demand conditions on materials such as grain, feed, cement, plastic granulate, and wood chips. The paddle switch can handle bulk densities as low as 15.06 g/l (0.94 lb/ft^3) with the optional rectangular vane or 100 g/l (6.25 lb/ft^3) with the standard measuring vane.

A low revolution geared motor with slip clutch drives a rotating measuring vane which senses the presence of material at the mounted level of the LPS200. As material comes into contact with the rotating paddle, rotation stops, which changes the microswitch state. When the paddle is no longer covered by material, rotation resumes and the relay reverts to its normal condition.

The LPS200 has a rugged design for use in harsh conditions in the solids industry. The sensitivity of the paddle can be adjusted for varying material properties like buildup on the vane.

The LPS200 comes in a variety of configurations including compact, extended and cable extension. It is equipped with a standard vane which is effective in most applications, but can be configured with a hinged or rectangular vane for increased sensitivity for light materials.

- Key Applications: bulk solids such as grain, feed, cement, plastic granulate, wood chips

Technical specifications

Mode of operation	
Measuring principle	Rotating point level switch
Input	
Measured variable	High and low and demand
Output	
Output signal	
• Alarm output	Microswitch 5 A at 250 V AC, non-inductive Microswitch SPDT contact 4 A at 30 V DC, non-inductive
• Pickup delay	Standard (1 rpm model): approx. 1.3 seconds Optional process applications (5 rpm model): approx. 0.26 seconds
Sensitivity	Adjustable via reset force of spring or geometry of measuring vane
Rated operating conditions	
Installation conditions	
• Location	Indoor/outdoor
Ambient conditions	
• Ambient temperature	-25 ... +60 °C (-13 ... +140 °F)
• Storage temperature	-40 ... +80 °C (-40 ... +176 °F)
• Installation category	III
• Pollution degree	2
Medium conditions	Bulk solids
• Temperature	
- Standard	-25 ... +80 °C (-13 ... +176 °F)
- Optional	-25 ... +600 °C (-13 ... +1 112 °F) Higher temperature version is available. Consult a local sales person for details. For more information, please visit http://www.automation.siemens.com/aspa_app.
• Pressure (vessel)	
- Standard	Max. 0.5 bar g (7.25 psi g)
- Optional	Max. 10 bar g (145 psi g)
• Minimum material density	
- Standard measuring vane	Can detect down to 100 g/l (6.25 lb/ft^3)
- Optional measuring vane	Can detect down to 15.06 g/l (0.94 lb/ft^3)
Design	
Material	
• Enclosure	Epoxy coated aluminum
• Process connection, measuring shaft and vane	Stainless steel or aluminum
Process connection	Thread NPT, BSP, and flange options
Degree of protection	IP65/Type 4/NEMA 4
Conduit entry	2 x M20 x 1.5 or 2 x ½" NPT (For FM and CSA approved versions only)
Power supply	
AC or DC versions	115 V AC, ± 15 %, 50 ... 60 Hz, 4 VA or 230 V AC, ± 15 %, 50 Hz, 6 VA, or 48 V AC, or 24 V AC, or 24 V DC, ± 15 %, 2.5 W
Universal voltage (DPDT replay)	24 V DC ± 15 % 50 ... 60 Hz, 22 ... 230 V AC, ± 10 %, max. 10 VA
Certificates and approvals	• CSA/FM General Purpose • CE • CSA/FM Dust Ignition Proof • ATEX II 1/2 D • RCM • IECex

© Siemens 2020

Selection and ordering data

	Article No.														Article No.													
SITRANS LPS200 Rotary paddle point level switch, compact design ↗	**7ML5725-**													Ord. code	**SITRANS LPS200 Rotary paddle point level switch, compact design**	**7ML5725-**												Ord. code
Level detection in solids. Compact, side or top mount with extension options to 300 mm (11.81 inch).	■	■	■	■	■	-	■	■	■	0		■	■	■	Level detection in solids. Compact, side or top mount with extension options to 300 mm (11.81 inch).	■	■	■	■	■	-	■	■	■	0		■	■	■
↗ Click on the Article No. for the online configuration in the PIA Life Cycle Portal.																														
Process temperature															**Process pressure**															
Up to 80 °C (176 °F)	1														Up to 0.5 bar (7.25 psi)			1											
Up to 150 °C (302 °F)	2														Up to 5 bar (72.5 psi)			2											
Up to 250 °C (482 °F)	3														Up to 10 bar (145 psi)			3											
Up to 600 °C (1 112 °F)[1)2)]	4														**Process connection material**															
Up to 80 °C (176 °F) basic version aluminum[1)3)]	5														Aluminum[7)]				1											
Up to 80 °C (176 °F) basic version stainless steel[1)4)]	6														Stainless steel, threads 303 (1.4305), flanges 321 (1.4541), Tri-clamp 304 (1.4301)				2										
Power supply															Stainless steel 316L (1.4404)[8)]				3											
230 V AC, 1 rev/min.		A													**Extension length**															
230 V AC, 5 rev/min.		C													100 mm (3.94 inch)[9)]						1									
115 V AC, 1 rev/min.		E													150 mm (5.91 inch)						2									
115 V AC, 5 rev/min.		G													200 mm (7.87 inch)						3									
48 V AC, 1 rev/min.		J													250 mm (9.84 inch)						4									
24 V AC, 1 rev/min.		K													300 mm (11.81 inch)						5									
24 V DC, 1 rev/min.		L													**Measuring vane**															
24 V DC, 5 rev/min.		N													Boot shaped, 35 x 106 mm (1.38 x 4.17 inch)[10)]							A								
48 V AC, 5 rev/min.		Z										J	1	B	Hinged vane, 65 x 200 mm (2.56 x 7.87 inch)[10)11)]							B								
24 V AC, 5 rev/min.		Z										J	1	E	Boot shaped, 28 x 98 mm (1.10 x 3.86 inch)							C								
Universal Voltage, 1 rev/min.		Z										J	2	A	Rectangular, 50 x 150 mm (1.97 x 5.91 inch)[12)]							D								
Universal Voltage, 1 rev/min., fail-safe		Z										J	2	B	Rectangular, 50 x 250 mm (1.97 x 9.84 inch)[12)]							E								
Universal Voltage, 5 rev/min.		Z										J	2	C	Rectangular, 98 x 150 mm (3.86 x 5.91 inch)[11)12)]							F								
Universal Voltage, 5 rev/min. fail-safe		Z										J	2	D	Rectangular, 98 x 250 mm (3.86 x 9.84 inch)[11)12)]							G								
Process connection															Rectangular, 50 x 98 mm (1.97 x 3.86 inch)[12)]							H								
Threaded															**Approvals**															
G 1¼" [(BSPP), EN ISO 228-1]			A												CSA/FM Dust Ignition Proof, RCM								A							
G 1" [(BSPP), EN ISO 228-1]			B												ATEX II ½ D, RCM								B							
G 1½" [(BSPP), EN ISO 228-1]			C												CSA/FM General Purpose, RCM, CE								C							
1" NPT [(Taper), ANSI/ASME B1.20.1]			D												CE, RCM								D							
1¼" NPT [(Taper), ANSI/ASME B1.20.1]			E												IEC Ex ta/tb IIIC								E							
1½" NPT [(Taper), ANSI/ASME B1.20.1]			F												EAC Ex ta/tb IIIC Da/Db								F							
Flanged																														
DN 32 PN 6, EN 1092-1, flat face[5)]			G																											
DN 100 PN 6, EN 1092-1, flat face[5)]			H																											
DN 100 PN 16, EN 1092-1, flat face			J																											
2" ASME 150 lb B16.5, raised face			K																											
3" ASME 150 lb B16.5, raised face			L																											
4" ASME 150 lb B16.5, raised face			M																											
2" Tri-clamp (DN 50) ISO 2852[6)]			N																											

© Siemens 2020

Selection and ordering data

	Order code
Further Designs	
Please add "**-Z**" to Article No. and specify Order code(s).	
Heating of enclosure[13)14)]	**A35**
Signal bulb inserted in M20 cable gland[13)]	**A20**
Food grade materials (in contact with process), according to 1935/2004/EC, with FDA conform shaft sealing[15)]	**K01**
Stainless steel tag [100 x 45 mm (3.94 x 1.77 inch)]: Measuring-point number/identification (max. 27 characters); specify in plain text	**Y14**
Functional Safety (SIL 2). Device suitable for use in accordance with IEC 61508 and IEC 61511[17)18)]	**C20**
Factory test certificate - M to DIN 55350, Part 18	**C11**
Operating Instructions	
All literature is available to download for free, in a range of languages, at	

http://www.siemens.com/processinstrumentation/documentation

	Article No.
Spare Parts	
Replacement vane, boot shape, 35 x 106 mm (1.38 x 4.17 inch)	**7ML1830-1KH**
Hinged vane, 98 x 200 mm (3.86 x 7.87 inch)	**7ML1830-1KJ**
Rigid extension kit	
(Includes spring coupling, rigid tube extension, and required pins)	
Extension: 500, 400, 300 mm (19.7, 15.8, 11.8 inch)[16)]	**7ML5711-0AA**
Extension: 1 000, 900, 800, 700, 600 mm (39.4, 35.4, 31.5, 27.6, 23.6 inch)[16)]	**7ML5711-1AA**
Extension: 1 500, 1 400, 1 300, 1 200, 1 100 mm (59.1, 55.1, 51.2, 47.2, 43.3 inch)[16)]	**7ML5711-2AA**
Rope extension kit, 2 m (6.56 ft)	**7ML1830-1KK**
SITRANS LPS200, compact for up to 80 °C (176 °F), aluminum, with power supply E, process connection E, process pressure 1, process connection material 1, extension length 2, measuring vane A, and approval C	**7ML5725-5EE11-2AC0**
SITRANS LPS200, compact for up to 80 °C (176 °F), stainless steel, with power supply Z (J2A), process connection C, process pressure 1, process connection material 2, extension length 2, measuring vane A, and approval B	**7ML5725-6ZC12-2AB0 J2A**
SITRANS LPS200, compact for up to 80 °C (176 °F), stainless steel, with power supply Z (J2A), process connection E, process pressure 1, process connection material 2, extension length 2, measuring vane A, and approval A	**7ML5725-6ZE12-2AA0 J2A**

1) Available with approval options C and D only, up to 0.5 bar.
2) Not available with process connections A, B, D, E, and G.
3) Only available with the following configurations 7ML5725-5AC11-2AD0 or 7ML5725-5EE11-2AC0.
4) Only available with the following configurations 7ML5725-6ZC12-2AB0 J2A or 7ML5725-6ZE12-2AA0 J2A.
5) Available with process pressure options 1 and 2 only.
6) Available with process temperature option 1 only.
7) Available with process connection options A ... F only, process pressure option 1 and process temperature options 1 and 5 only.
8) Available with process connection options C, F, H … N and Measuring vane options A and B.
9) Available with measuring vane options A, C, D, E, H only.
10) Add 16 mm (0.63 inch) to extension length.
11) Available with extension lengths 2, 3, 4, 5.
12) Available with process connection options H … M only.
13) Available with approval option D only.
14) Available with power supply options A, C, E, G, J, K, L, N, J1B, J1D, J1E, J2A, J2C only.
15) Available up to 250 °C (482 °F). This option does not automatically implement a food conform design.
16) Pendulum shaft 500 mm/1 000 mm/1 500 mm should be selected with 150 mm standard length 2 and vane A (35 x 106) to get to the desired lengths.
17) Available with Power supply options J2A and J2C only.
18) Available with Approval options A, B, C, D, and E only. Approvals A and C with FM only.

© Siemens 2020

Selection and ordering data

	Article No. 7ML5726-												Ord. code
SITRANS LPS200 Rotary paddle point level switch, shaft protected design ↗													
Level detection in aggressive solids. Compact, side or top mount, with enhanced shaft protection. Extension options to 300 mm (11.81 inch).	■	■	■	■	■	-	■	■	■	■	■	■	■
↗ Click on the Article No. for the online configuration in the PIA Life Cycle Portal.													
Process temperature													
Up to 80 °C (176 °F)	1												
Up to 150 °C (302 °F)	2												
Up to 250 °C (482 °F)	3												
Up to 600 °C (1 112 °F)[1)2)]	4												
Up to 80 °C (176 °F) basic version[3)]	5												
Power supply													
230 V AC, 1 rev/min.		A											
230 V AC, 5 rev/min.		C											
115 V AC, 1 rev/min.		E											
115 V AC, 5 rev/min.		G											
48 V AC, 1 rev/min.		J											
24 V AC, 1 rev/min.		K											
24 V DC, 1 rev/min.		L											
24 V DC, 5 rev/min.		N											
48 V AC, 5 rev/min.		Z									J	1	B
24 V AC, 5 rev/min.		Z									J	1	E
Universal voltage, 1 rev/min.		Z									J	2	A
Universal voltage, 1 rev/min., fail-safe		Z									J	2	B
Universal voltage, 5 rev/min.		Z									J	2	C
Universal voltage, 5 rev/min., fail-safe		Z									J	2	D
Process connection													
Threaded													
G 1¼" [(BSPP), EN ISO 228-1]			A										
G 1½" [(BSPP), EN ISO 228-1]			B										
1¼" NPT [(Taper), ANSI/ASME B1.20.1]			C										
1½" NPT [(Taper), ANSI/ASME B1.20.1]			D										
Flanged													
DN 32 PN 6, EN 1092-1, flat face[4)]			E										
DN 100 PN 6, EN 1092-1, flat face[4)]			F										
DN 100 PN 16, EN 1092-1, flat face			G										
2" ASME 150 lb B16.5, raised face			H										
3" ASME 150 lb B16.5, raised face			J										
4" ASME 150 lb B16.5, raised face			K										
2" Tri-clamp (DN 50) ISO 2852[5)]			L										

	Article No. 7ML5726-												Ord. code
SITRANS LPS200 Rotary paddle point level switch, shaft protected design													
Level detection in aggressive solids. Compact, side or top mount, with enhanced shaft protection. Extension options to 300 mm (11.81 inch).	■	■	■	■	■	-	■	■	■	■	■	■	■
Process pressure													
Up to 0.5 bar (7.25 psi)			1										
Up to 5 bar (72.5 psi)			2										
Up to 10 bar (145 psi)			3										
Process connection material													
Aluminum[6)]				1									
Stainless steel, threads 303 (1.4305), flanges 321 (1.4541), Tri-clamp 304 (1.4301)[18)]				2									
Stainless steel 316L (1.4404)[7)]				3									
Extension length													
150 mm (5.91 inch)[8)]						1							
200 mm (7.87 inch)						2							
250 mm (9.84 inch)						3							
300 mm (11.81 inch)						4							
Extension material (protection tube)													
Aluminum[9)]								A					
Stainless steel 303 (1.4305)								B					
Stainless steel 316L (1.4404)[10)]								C					
Measuring vane													
Boot shaped, 35 x 106 mm (1.38 x 4.17 inch)[11)]									A				
Hinged vane, 65 x 200 mm (2.56 x 7.87 inch)[11)12)]									B				
Rectangular, 50 x 150 mm (1.97 x 5.91 inch)[13)]									D				
Rectangular, 50 x 250 mm (1.97 x 9.84 inch)[13)]									E				
Rectangular, 98 x 150 mm (3.86 x 5.91 inch)[12)13)]									F				
Rectangular, 98 x 250 mm (3.86 x 9.84 inch)[12)13)]									G				
Rectangular, 50 x 98 mm (1.97 x 3.86 inch)[13)]									H				
Approvals													
CSA/FM Dust Ignition Proof, RCM										1			
ATEX II ½ D, RCM										2			
CSA/FM General Purpose, RCM, CE										3			
CE, RCM										4			
IEC Ex ta/tb IIIC										5			
EAC Ex ta/tb IIIC Da/Db										6			

© Siemens 2020

Selection and ordering data

	Order code
Further Designs	
Please add "**-Z**" to Article No. and specify Order code(s).	
Heating of enclosure[14)15)]	**A35**
Signal bulb inserted in M20 cable gland[14)]	**A20**
Food grade materials (in contact with process), according to 1935/2004/EC, with FDA conform shaft sealing[16)]	**K01**
Stainless steel tag [100 x 45 mm (3.94 x 1.77 inch)]: Measuring-point number/identification (max. 27 characters); specify in plain text	**Y14**
Functional Safety (SIL 2). Device suitable for use in accordance with IEC 61508 and IEC 61511.[17)19)]	**C20**
Factory test certificate - M to DIN 55350, Part 18	**C11**

	Article No.
Operating Instructions	
All literature is available to download for free, in a range of languages, at	
http://www.siemens.com/processinstrumentation/documentation	
Spare Parts	
Replacement vane, boot shape, 35 x 106 mm (1.38 x 4.17 inch)	**7ML1830-1KH**
Hinged vane, 98 x 200 mm (3.86 x 7.87 inch)	**7ML1830-1KJ**
SITRANS LPS200, extended for up to 80 °C (176 °F), power supply Z (J2A), process connection B, process pressure 1, process connection material 2, extension length 2, extension material B, measuring vane A, and approval 2	**7ML5726-5ZB12-2BA2 J2A**
SITRANS LPS200, extended for up to 80 °C (176 °F), power supply Z (J2A), process connection C, process pressure 1, process connection material 2, extension length 2, extension material B, measuring vane A, and approval 1	**7ML5726-5ZC12-2BA1 J2A**

1) Available with approval options 3 and 4 only and up to max 0.5 bar.
2) Not available with process connection options A, C, E.
3) Only available with the following configurations 7ML5726-5ZB12-2BA2 J2A or 7ML5726-5ZC12-2BA1 J2A.
4) Available with process pressure options 1 and 2 only.
5) Available with process temperature option 1 only.
6) Available with process connection options A ... E only, available with process pressure option 1 only, and process temperature option 1 only.
7) Extension and vane will also change to 316L, only for process connection options B, D, F … L and vane A.
8) Available with measuring vane options A, D, E, H only.
9) Available with process pressure option 1 and process temperature option 1 only.
10) Available with process connection options B, D, F … L and vane A.
11) Add 16 mm (0.63 inch) to extension length.
12) Available with extension length options 2 … 4 only.
13) Available with process connection options F, G, H, J, K only.
14) Available with approval option 4 only.
15) Available with power supply options A, C, E, G, J, K, L, N, J1B, J1D, J1E, J2A, J2C only.
16) Available up to 250 °C (482 °F). This option does not automatically implement a food conform design.
17) Available with Power supply options J2A and J2C only.
18) Available with Extension material Stainless steel, threads 303 option B only.
19) Available with Approval options 1, 2, 3, 4, and 5 only. Approvals 1 and 3 with FM only.

© Siemens 2020

Selection and ordering data

SITRANS LPS200 Rotary paddle point level switch, cable extension design	Article No. 7ML5727-												Ord. code
Level detection in solids. Top mount, with extension options to 10 m (32.80 ft).	■	■	■	■	■	-	■	■	■	0	■	■	■
↗ Click on the Article No. for the online configuration in the PIA Life Cycle Portal.													
Process temperature													
Up to 80 °C (176 °F)	1												
Up to 150 °C (302 °F)	2												
Up to 250 °C (482 °F)	3												
Up to 600 °C (1 112 °F)[1)2)]	4												
Up to 80 °C (176 °F) basic version[3)]	5												
Power supply													
230 V AC, 1 rev/min.		A											
230 V AC, 5 rev/min.		C											
115 V AC, 1 rev/min.		E											
115 V AC, 5 rev/min.		G											
48 V AC, 1 rev/min.		J											
24 V AC, 1 rev/min.		K											
24 V DC, 1 rev/min.		L											
24 V DC, 5 rev/min.		N											
48 V AC, 5 rev/min.		Z									J	1	B
24 V AC, 5 rev/min.		Z									J	1	E
Universal voltage, 1 rev/min.		Z									J	2	A
Universal voltage, 1 rev/min., fail-safe		Z									J	2	B
Universal voltage, 5 rev/min.		Z									J	2	C
Universal voltage, 5 rev/min., fail-safe		Z									J	2	D
Process connection													
Threaded													
G 1¼" [(BSPP), EN ISO 228-1]			A										
G 1½" [(BSPP), EN ISO 228-1]			B										
1¼" NPT [(Taper), ANSI/ASME B1.20.1]			C										
1½" NPT [(Taper), ANSI/ASME B1.20.1]			D										
Flanged													
DN 32 PN 6, EN 1092-1, flat face[4)]			E										
DN 100 PN 6, EN 1092-1, flat face[4)]			F										
DN 100 PN 16, EN 1092-1, flat face			G										
2" ASME 150 lb B16.5, raised face			H										
3" ASME 150 lb B16.5, raised face			J										
4" ASME 150 lb B16.5, raised face			K										

SITRANS LPS200 Rotary paddle point level switch, cable extension design	Article No. 7ML5727-												Ord. code
Level detection in solids. Top mount, with extension options to 10 m (32.80 ft).	■	■	■	■	■	-	■	■	■	0	■	■	■
Process pressure													
Up to 0.5 bar (7.25 psi)			1										
Up to 5 bar (72.5 psi)			2										
Up to 10 bar (145 psi)			3										
Process connection material													
Aluminum[5)]				1									
Stainless steel, threads 303 (1.4305), flanges 321 (1.4541)				2									
Cable extension length													
Standard cable length, 2 000 mm (78.74 inch)							0						
Add Order code Y01 and plain text: "Insertion length ... mm"													
500 ... 1 000 mm (19.69 ... 39.37 inch)							1						
Cable length 1 001 ... 2 000 mm (39.41 ... 78.74 inch)							2						
Cable length 2 001 ... 3 000 mm (78.78 ... 118.11 inch)							3						
Cable length 3 001 ... 4 000 mm (118.15 ... 157.48 inch)							4						
Cable length 4 001 ... 5 000 mm (157.52 ... 196.85 inch)							5						
Cable length 5 001 ... 6 000 mm (196.89 ... 236.22 inch)							6						
Cable length 6 001 ... 7 000 mm (236.26 ... 275.59 inch)							7						
Cable length 7 001 ... 10 000 mm (275.63 ... 393.70 inch)							8						
Without extension[12)]							9				N	1	A
Measuring vane													
Boot shaped, 35 x 106 mm (1.38 x 4.17 inch)[6)]								A					
Hinged vane, 65 x 200 mm (2.56 x 7.87 inch)[6)]								B					
Boot shaped, 28 x 98 mm (1.10 x 3.86 inch)[7)]								C					
Rectangular, 50 x 150 mm (1.97 x 5.91 inch)[7)]								D					
Rectangular, 50 x 250 mm (1.97 x 9.84 inch)[7)]								E					
Rectangular, 98 x 150 mm (3.86 x 5.91 inch)[7)]								F					
Rectangular, 50 x 98 mm (1.97 x 3.86 inch)[7)]								G					
Approvals													
CSA/FM Dust Ignition Proof, RCM									A				
ATEX II ½ D, RCM									B				
CSA/FM General Purpose, RCM, CE									C				
CE, RCM									D				
IEC Ex ta/tb IIIC									E				
EAC Ex ta/tb IIIC Da/Db									F				

© Siemens 2020

Selection and ordering data

	Order code
Further Designs	
Please add "**-Z**" to Article No. and specify Order code(s).	
Total insertion length:	**Y01**
Stainless steel tag [100 x 45 mm (3.94 x 1.77 inch)]: Measuring-point number/identification (max. 27 characters); specify in plain text	**Y14**
Reinforced cable (max. 28 kN pulling force)[8]	**P01**
Heating of enclosure[9][10]	**A35**
Signal bulb inserted in M20 cable gland[9]	**A20**
Food grade materials (in contact with process), according to 1935/2004/EC, with FDA conform shaft sealing[11]	**K01**
Functional Safety (SIL 2). Device suitable for use in accordance with IEC 61508 and IEC 61511.[13][14]	**C20**
Factory test certificate - M to DIN 55350, Part 18	**C11**

	Article No.
Operating Instructions	
All literature is available to download for free, in a range of languages, at	
http://www.siemens.com/processinstrumentation/documentation	
Spare Parts	
Replacement vane, boot shape, 35 x 106 mm (1.38 x 4.17 inch)	**7ML1830-1KH**
Hinged vane, 98 x 200 mm (3.86 x 7.87 inch)	**7ML1830-1KJ**
SITRANS LPS200, cable extension for up to 80 °C (176 °F), power supply Z (J2A), process connection B, process pressure 1, process connection material 2, extension length 0, measuring vane A, and approval B	**7ML5727-5ZB12-0AB0 J2A**
SITRANS LPS200, cable extension for up to 80 °C (176 °F), power supply Z (J2A), process connection C, process pressure 1, process connection material 2, extension length 0, measuring vane A, and approval A	**7ML5727-5ZC12-0AA0 J2A**

1) Available with approval options C and D up to max. 0.5 bar.
2) Not available with process connections A, C, E.
3) Only available with the following configurations 7ML5727-5ZC12-0AA0 J2A or 7ML5727-5ZB12-0AB0 J2A.
4) Available with process pressure options 1 and 2 only.
5) Available with process connections A ... E only, process pressure option 1 only and process temperature options 1 and 5 only.
6) Add 16 mm (0.63 inch) to extension length.
7) Available with process connections F … K only.
8) Available only for process temperature up to 80 °C (176 °F) and process connection material 2.
9) Available with approval option D.
10) Available with power supply options A, C, E, G, J, K, L, N, J1B, J1D, J1E, J2A, J2C only.
11) Available up to 250 °C (482 °F). This option does not automatically implement a food conform design (food conform gaps and radius).
12) Not available with P01 and available with Approval D, mounting kit for rope extension included.
13) Available with Power supply options J2A and J2C only.
14) Available with Approval options A, B, C, D, and E only. Approvals A and C with FM only.

© Siemens 2020

Selection and ordering data

	Article No.													Order code
SITRANS LPS200 Rotary paddle point level switch, angled extension design ↗	**7ML5728-**												Ord. code	
Level detection in aggressive applications. Bottom or side mount with enhanced shaft protection. Extension options to 300 mm (11.81 inch).	■	■	■	■	■	-	■	■	■	**0**		■	■	■	
↗ Click on the Article No. for the online configuration in the PIA Life Cycle Portal.															
Process temperature														
Up to 80 °C (176 °F)	**1**													
Up to 150 °C (302 °F)	**2**													
Up to 250 °C (482 °F)	**3**													
Power supply														
230 V AC, 1 rev/min.		**A**												
230 V AC, 5 rev/min.		**C**												
115 V AC, 1 rev/min.		**E**												
115 V AC, 5 rev/min.		**G**												
48 V AC, 1 rev/min.		**J**												
24 V AC, 1 rev/min.		**K**												
24 V DC, 1 rev/min.		**L**												
24 V DC, 5 rev/min.		**N**												
48 V AC, 5 rev/min.		**Z**										**J**	**1**	**B**
24 V AC, 5 rev/min.		**Z**										**J**	**1**	**E**
Universal voltage, 1 rev/min.		**Z**										**J**	**2**	**A**
Universal voltage, 1 rev/min., fail-safe		**Z**										**J**	**2**	**B**
Universal voltage, 5 rev/min.		**Z**										**J**	**2**	**C**
Universal voltage, 5 rev/min., fail-safe		**Z**										**J**	**2**	**D**
Process connection														
Flanged														
DN 100 PN 6, EN 1092-1, flat face[1]			**A**											
DN 100 PN 16, EN 1092-1, flat face			**B**											
4" ASME 150 lb B16.5, raised face			**C**											
Process pressure														
Up to 0.5 bar (7.25 psi)				**1**										
Up to 5 bar (72.5 psi)				**2**										
Up to 10 bar (145 psi)				**3**										
Process connection material														
Stainless steel 303/321 (1.4305/1.4541)					**1**									
Extension length														
125 mm (4.92 inch)							**1**							
150 mm (5.91 inch)							**2**							
200 mm (7.87 inch)							**3**							
250 mm (9.84 inch)							**4**							
300 mm (11.81 inch)							**5**							
Measuring vane														
Rectangular vane, 50 x 98 mm (1.97 x 3.86 inch)								**A**						
Rectangular vane, 50 x 150 mm (1.97 x 5.91 inch)								**B**						
Rectangular vane, 50 x 250 mm (1.97 x 9.84 inch)								**C**						
Rectangular vane, 98 x 150 mm (3.86 x 5.91 inch)								**D**						
Rectangular vane, 98 x 250 mm (3.86 x 9.84 inch)								**E**						
Hinged vane, 65 x 200 mm (2.56 x 7.87 inch)								**F**						
Approvals														
CSA/FM Dust Ignition Proof, RCM									**A**					
ATEX II ½ D, RCM									**B**					
CSA/FM General Purpose, RCM, CE									**C**					
CE, RCM									**D**					
IEC Ex ta/tb IIIC									**E**					
EAC Ex ta/tb IIIC Da/Db									**F**					

	Order code
Further Designs	
Please add "**-Z**" to Article No. and specify Order code(s).	
Heating of enclosure[2)3)]	**A35**
Signal bulb inserted in M20 cable gland[2)]	**A20**
Food grade materials (in contact with process), according to 1935/2004/EC, with FDA conform shaft sealing[4)]	**K01**
Stainless steel tag [100 x 45 mm (3.94 x 1.77 inch)]: Measuring-point number/identification (max. 27 characters); specify in plain text	**Y14**
Functional Safety (SIL 2). Device suitable for use in accordance with IEC 61508 and IEC 61511.[5)6)]	**C20**
Factory test certificate - M to DIN 55350, Part 18	**C11**
Operating Instructions	Article No.
All literature is available to download for free, in a range of languages, at	
http://www.siemens.com/processinstrumentation/documentation	
Spare Parts	
Replacement vane, boot shape, 35 x 106 mm (1.38 x 4.17 inch)	**7ML1830-1KH**
Hinged vane, 98 x 200 mm (3.86 x 7.87 inch)	**7ML1830-1KJ**

1) Available with process pressure options 1 and 2 only.
2) Available with Approval option D only.
3) Available with Power supply options A ,C, E, G, J, K, L, N, J1B, J1D, J1E, J2A, J2C only.
4) This option does not automatically implement a food conform design.
5) Available with Power supply options J2A and J2C only.
6) Available with Approval options A, B, C, D, and E only. Approvals A and C with FM only.

© Siemens 2020

Selection and ordering data

	Article No.														
SITRANS LPS200 Rotary paddle point level switch, rigid extension design ↗	**7ML5730-**														Ord. code
Level detection in solids. Top mount, with extension options to 4 m (13.12 ft).	■	■	■	■	■	-	■	■	■	■		■	■	■	
↗ Click on the Article No. for the online configuration in the PIA Life Cycle Portal.															
Process temperature															
Up to 80 °C (176 °F)	**1**														
Up to 150 °C (302 °F)	**2**														
Up to 250 °C (482 °F)	**3**														
Up to 600 °C (1 112 °F)[1)2)]	**4**														
Power supply															
230 V AC, 1 rev/min.		**A**													
230 V AC, 5 rev/min.		**C**													
115 V AC, 1 rev/min.		**E**													
115 V AC, 5 rev/min.		**G**													
48 V AC, 1 rev/min.		**J**													
24 V AC, 1 rev/min.		**K**													
24 V DC, 1 rev/min.		**L**													
24 V DC, 5 rev/min.		**N**													
48 V AC, 5 rev/min.		**Z**										**J**	**1**	**B**	
24 V AC, 5 rev/min.		**Z**										**J**	**1**	**E**	
Universal voltage, 1 rev/min.		**Z**										**J**	**2**	**A**	
Universal voltage, 1 rev/min., fail-safe		**Z**										**J**	**2**	**B**	
Universal voltage, 5 rev/min.		**Z**										**J**	**2**	**C**	
Universal voltage, 5 rev/min., fail-safe		**Z**										**J**	**2**	**D**	
Process connection															
Threaded															
G 1¼" [(BSPP), EN ISO 228-1]			**A**												
G 1½" [(BSPP), EN ISO 228-1]			**B**												
1¼" NPT [(Taper), ANSI/ASME B1.20.1]			**C**												
1½" NPT [(Taper), ANSI/ASME B1.20.1]			**D**												
Flanged															
DN 32 PN 6, EN 1092-1, flat face[3)]			**E**												
DN 100 PN 6, EN 1092-1, flat face[3)]			**F**												
DN 100 PN 16, EN 1092-1, flat face			**G**												
2" ASME 150 lb B16.5, raised face			**H**												
3" ASME 150 lb B16.5, raised face			**J**												
4" ASME 150 lb B16.5, raised face			**K**												
2" Tri-clamp 2 (DN 50) ISO 2852[4)]			**L**												
Process pressure															
Up to 0.5 bar (7.25 psi)				**1**											
Up to 5 bar (72.5 psi)				**2**											
Up to 10 bar (145 psi)				**3**											
Process connection material															
Aluminum[5)]					**1**										
Stainless steel, threads 303 (1.4305), flanges 321 (1.4541), Tri-clamp 304 (1.4301)					**2**										
Stainless steel 316L (1.4404)[6)]					**3**										
Extension material (protection tube)															
Aluminum[7)8)]							**0**								
Stainless steel 303 (1.4305)[9)]							**1**								
Stainless steel 316L (1.4404)[10)11)22)]							**2**								

	Article No.														
SITRANS LPS200 Rotary paddle point level switch, rigid extension design	**7ML5730-**														Ord. code
Level detection in solids. Top mount, with extension options to 4 m (13.12 ft).	■	■	■	■	■	-	■	■	■	■		■	■	■	
Extension length															
Aluminum															
250 ... 500 mm (9.84 ... 19.69 inch)							**A**								
501 ... 750 mm (19.72 ... 29.53 inch)							**B**								
751 ... 1 000 mm (29.57 ... 39.37 inch)							**C**								
1 001 ... 1 250 mm (39.41 ... 42.21 inch)							**D**								
1 251 ... 1 500 mm (49.25 ... 59.06 inch)							**E**								
1 501 ... 1 750 mm (59.09 ... 68.90 inch)							**F**								
1 751 ... 2 000 mm (68.94 ... 78.74 inch)							**G**								
2 001 ... 2 250 mm (78.78 ... 88.58 inch)							**H**								
2 251 ... 2 500 mm (88.62 ... 98.43 inch)							**J**								
2 501 ... 2 750 mm (98.46 ... 108.27 inch)							**K**								
2 751 ... 3 000 mm (108.31 ... 118.11 inch)							**L**								
3 001 ... 3 250 mm (118.15 ... 127.95 inch)							**M**								
3 251 ... 3 500 mm (127.99 ... 137.80 inch)							**N**								
3 501 ... 3 750 mm (137.83 ... 147.64 inch)							**P**								
3 751 ... 4 000 mm (147.67 ... 157.48 inch)							**Q**								
Stainless steel 303 (1.4305)															
250 ... 500 mm (9.84 ... 19.69 inch)							**R**								
501 ... 750 mm (19.72 ... 29.53 inch)							**S**								
751 ... 1 000 mm (29.57 ... 39.37 inch)							**T**								
1 001 ... 1 500 mm (39.41 ... 59.05 inch)							**U**								
1 501 ... 2 000 mm (59.09 ... 78.74 inch)							**V**								
2 001 ... 2 500 mm (78.78 ... 98.42 inch)							**W**								
2 501 ... 3 000 mm (98.46 ... 118.11 inch)							**X**								
3 001 ... 4 000 mm (118.15 ... 157.48 inch)							**Y**								
Stainless steel 316L (1.4404)															
250 ... 500 mm (9.84 ... 19.69 inch)							**Z**					**P**	**1**	**A**	
501 ... 750 mm (19.72 ... 29.53 inch)							**Z**					**P**	**1**	**B**	
751 ... 1 000 mm (29.57 ... 39.37 inch)							**Z**					**P**	**1**	**C**	
1 001 ... 1 500 mm (39.41 ... 59.05 inch)							**Z**					**P**	**1**	**D**	
1 501 ... 2 000 mm (59.09 ... 78.74 inch)							**Z**					**P**	**1**	**E**	
2 001 ... 2 500 mm (78.78 ... 98.42 inch)							**Z**					**P**	**1**	**F**	
2 501 ... 3 000 mm (98.46 ... 118.11 inch)							**Z**					**P**	**1**	**G**	
3 001 ... 4 000 mm (118.5 ... 157.48 inch)							**Z**					**P**	**1**	**H**	
Measuring vane															
Boot shaped, 35 x 106 mm (1.34 x 4.17 inch)[12)]								**A**							
Hinged vane, 65 x 200 mm (2.56 x 7.87 inch)[12)]								**B**							
Rectangular, 50 x 150 mm (1.97 x 5.91 inch)[13)]								**C**							
Rectangular, 50 x 250 mm (1.97 x 9.84 inch)[13)]								**D**							
Rectangular, 98 x 150 mm (3.86 x 5.91 inch)[13)]								**E**							
Rectangular, 98 x 250 mm (3.86 x 9.84 inch)[13)]								**F**							
Rectangular, 50 x 98 mm (1.97 x 3.86 inch)[13)]								**G**							
Approvals															
CSA/FM Dust Ignition Proof, RCM									**1**						
ATEX II ½ D, RCM									**2**						
CSA/FM General Purpose, RCM, CE									**3**						
CE, RCM									**4**						
IEC Ex ta/tb IIIC									**5**						
EAC Ex ta/tb IIIC Da/Db									**6**						

© Siemens 2020

Selection and ordering data

	Order code
Further Designs	
Please add "**-Z**" to Article No. and specify Order code(s).	
Total insertion length: Enter the total insertion length in plain text description, max. 4 000 mm (157.48 inch)	**Y01**
Stainless steel tag [100 x 45 mm (3.94 x 1.77 inch)]: Measuring-point number/identification (max. 27 characters); specify in plain text	**Y14**
Heating of enclosure[14)15)]	**A35**
Signal bulb inserted in M20 cable gland[14)]	**A20**
Food grade materials (in contact with process), according to 1935/2004/EC, with FDA conform shaft sealing[16)17)]	**K01**
Functional Safety (SIL 2). Device suitable for use in accordance with IEC 61508 and IEC 61511.[20)21)]	**C20**
Factory test certificate - M to DIN 55350, Part 18	**C11**
Optional end of shaft seal for stability and ingress protection	
Max. temperature 80 °C (176 °F)	**P06**
Max. temperature 150 °C (302 °F)	**P07**
Max. temperature 250 °C (482 °F)	**P08**
Max. temperature 600 °C (1 112 °F)	**P09**
Sliding sleeve: standard, max. pressure 0.5 bar[14)18)]	**P12**
Sliding sleeve: pressure tight, for over-pressure application, dependent on pressure option ordered)[19)]	**P13**

	Article No.
Operating Instructions	
All literature is available to download for free, in a range of languages, at	
http://www.siemens.com/processinstrumentation/documentation	
Spare Parts	
Replacement vane, boot shape, 35 x 106 mm (1.38 x 4.17 inch)	**7ML1830-1KH**
Hinged vane, 98 x 200 mm (3.86 x 7.87 inch)	**7ML1830-1KJ**

1) Available with approval options 3 and 4, up to max 0.5 bar.
2) Not available with process connections A, C, E.
3) Available with process pressure options 1 and 2 only.
4) Available with process temperature 1 only.
5) Available with process connections A ... E only, with process pressure option 1 and process temperature option 1 only.
6) Available with process connection options B, D, F … L and measuring vane option A.
7) Available with process pressure 1 and process temperature 1 only.
8) Available with extension length options A … Q only.
9) Available with extension length options R … Y only.
10) Available with process connection options B, D, F … L and measuring vane A, process connection material 3. Available only with extension length options P1A … P1H only.
11) Only available with seal at tube end options P06 … P09.
12) Add 16 mm (0.63 inch) to extension length.
13) Available with process connections F, G, H, J, K only.
14) Available with approval option 4 only.
15) Available with power supply options A, C, E, G, J, K, L, N, J1B, J1D, J1E, J2A, J2C only.
16) Available when ordered with ingress protection seal options P06 … P09 only.
17) Available up to 250 °C (482 °F). This option does not automatically implement a food conform design.
18) Available with process pressure option 1 only.
19) Available up to 250 °C (482 °F).
20) Available with Power supply options J2A and J2C only.
21) Available with Approval options 1, 2, 3, 4, and 5 only. Approvals 1 and 3 with FM only.
22) Internal probe construction is 1.4305, add seal option P09 to prevent ingress.

© Siemens 2020

Dimensional drawings

Standard model: compact version

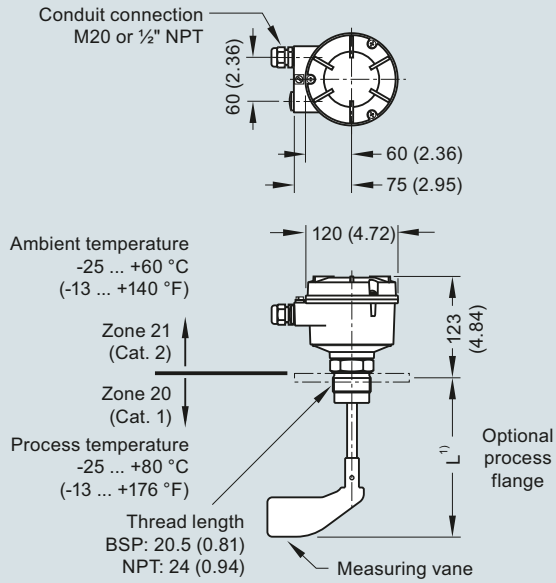

High temperature model: compact version

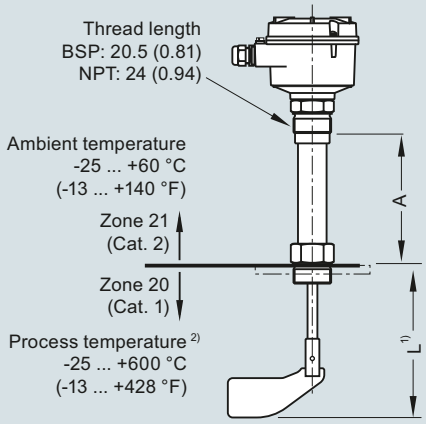

Process temperature	A
150/250 °C (302/482 °F)	200 (7.87)
350 °C (662 °F)	300 (11.81)
600 °C (1 112 °F)	400 (15.74)

L= Length
100 (3.94)
150 (5.91)
200 (7.87)
250 (9.84)
300 (11.81)

Shaft protected option

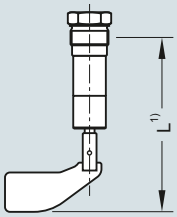

Angle option

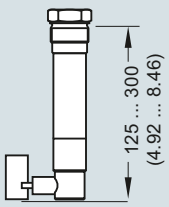

Rope option

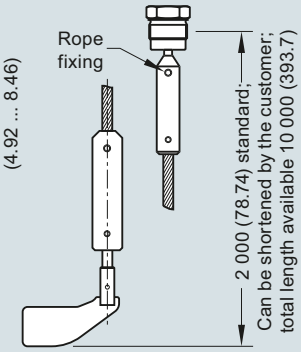

Measuring vanes

Standard

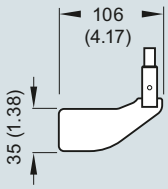

Hinged

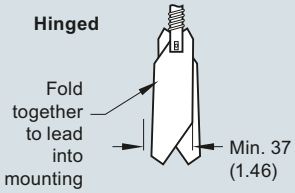

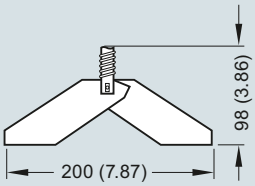

Rectangular

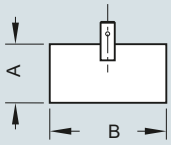

Rectangular vane options

A	B
50 (1.97)	98 (3.86)
50 (1.97)	150 (5.90)
50 (1.97)	250 (9.84)
98 (3.86)	150 (5.90)
98 (3.86)	250 (9.84)

Vane	Completely covered with material		Covered up to 10 cm (3.93 inch) with material	
	Spring adjustment		Spring adjustment	
	Light	Central (factory setting)	Light	Central (factory setting)
Boot shaped 35 x 106 mm	200 g/l (12.5 lb/ft³)	300 g/l (18.7 lb/ft³)	100 g/l (6.2 lb/ft³)	150 g/l (9.4 lb/ft³)
Boot shaped 28 x 98 mm	300 g/l (18.7 lb/ft³)	500 g/l (31.2 lb/ft³)	150 g/l (9.4 lb/ft³)	150 g/l (9.4 lb/ft³)
Rectangular 50 x 98 mm	300 g/l (18.7 lb/ft³)	500 g/l (31.2 lb/ft³)	150 g/l (9.4 lb/ft³)	250 g/l (15.6 lb/ft³)
Rectangular 50 x 150 mm	80 g/l (5.0 lb/ft³)	120 g/l (7.5 lb/ft³)	40 g/l (2.5 lb/ft³)	60 g/l (3.7 lb/ft³)
Rectangular 50 x 250 mm	30 g/l (1.9 lb/ft³)	50 g/l (3.1 lb/ft³)	15 g/l (0.9 lb/ft³)	25 g/l (1.6 lb/ft³)
Rectangular 98 x 150 mm	30 g/l (1.9 lb/ft³)	50 g/l (3.1 lb/ft³)	15 g/l (0.9 lb/ft³)	25 g/l (1.6 lb/ft³)
Rectangular 98 x 250 mm	20 g/l (1.2 lb/ft³)	30 g/l (1.9 lb/ft³)	15 g/l (0.9 lb/ft³)	15 g/l (0.9 lb/ft³)
Hinged 98 x 200 mm	70 g/l (4.4 lb/ft³)	100 g/l (6.2 lb/ft³)	35 g/l (2.2 lb/ft³)	50 g/l (3.1 lb/ft³)

1. For 35 x 106 mm boot shaped and 98 x 200 mm hinged measuring vanes, add 16 mm to extension length.
2. For use with all approval options except CSA class II. See manual for more details.

Notes
For heavy material, only top mounting of paddle switch is recommended.
Compact LPS200 is recommended for side mounting on bins for low or intermediate material levels.

SITRANS LPS200, dimensions in mm (inch)

© Siemens 2020

Circuit diagrams

AC or DC version

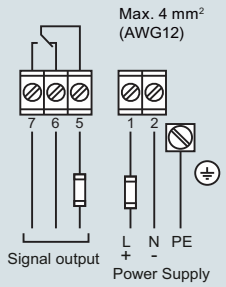

Universal voltage (DPDT relay)*

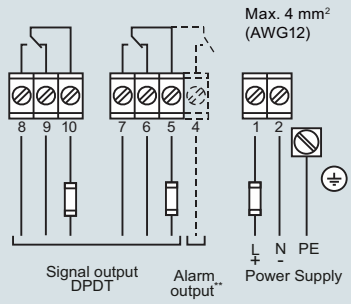

* See manual for universal voltage with SIL.

** With option Fail safe alarm (rotation control).
Contact open when de-energised.
Fail safe alarm switching and timing behaviour:
If the vane is not covered, the rotating vane shaft will send pulses at 20 second intervals.
In case of fault, the pulses are missed.
After 30 seconds, the alarm relay will open.

Power supply:

AC version:
24 V or 48 V or 115 V or 230 V 50/60 Hz max. 4 VA
All voltages ± 10 %[1)]
Supply voltage as selected.
External fuse: max 10 A, fast or slow, HBC, 250 V

DC version:
24 V DC ± 15 %[1)] max. 2.5 W
External fuse: not required

[1)] Including ±10% of EN 61010

Signal output:
Micro switch, SPDT contact
max. 250 V AC, 5 A, non inductive
max. 30 V DC, 4 A, non inductive
External fuse: max 10 A, fast or slow, HBC, 250 V

Signal output: delay

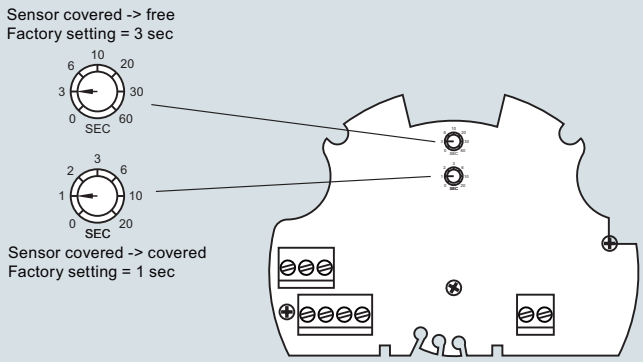

SITRANS LPS200 connections

© Siemens 2020

Benefits

- 2 switch outputs for high-high, high, low, and low-low level alarms or pump up/pump down control
- Integral temperature compensation
- AC or DC power supply
- Electronics provided with fail-safe function
- Threaded and sanitary fitting clamp process connections
- Polycarbonate enclosure, Type 6/NEMA 6/IP67
- Easy, two-button programming

Application

The measuring range for bulk solids is max. 3 m (9.8 ft) and 5 m (16.4 ft) for liquids and slurries. Unlike invasive contacting devices, there is no material buildup on the sensor.

The level switch has a rugged design, combining the transducer and electronics in one durable device. It has no moving parts and is virtually maintenance-free.

The transducer, available in ETFE or PVDF copolymer, is inert to most chemicals. This means the device can be used in the chemical, petrochemical, water, and wastewater industries. A sanitary version of the ULS200, with an industry standard flange option, is easy to remove from the application for cleaning. It thus satisfies the prerequisites for use in the food, beverage, and pharmaceutical industries. The Pointek ULS200 delivers superior performance while reducing maintenance, downtime, and equipment replacement costs.

- Key Applications: liquids, slurries, fluid materials, plugged chute detection, chemical industry

Design

Installation

The Pointek ULS200 should be mounted in an area that is within the temperature range specified and that is suitable to the enclosure rating and materials of construction. The cover should be accessible to allow programming, wiring and display viewing.

It is advisable to keep the Pointek ULS200 away from high voltage or current runs, contactors and SCR control drives.

Locate the Pointek ULS200 so that it has a clear sound path perpendicular to the material surface. The sound path should not intersect the fill path, rough walls, seams, rungs etc.

Mounting and Interconnection

The Pointek ULS200 is available in three thread types: 2" NPT, R 2" (BSPT), EN 10226 or PF2 and can be fitted with the optional 75 mm (3 inch) flange adapter for mating to 3" ASME, DN 65, PN 10, and JIS 10K 3B sized flanges.

Separate cables and conduit may be required to conform to standard instrumentation wiring or electrical codes.

Configuration

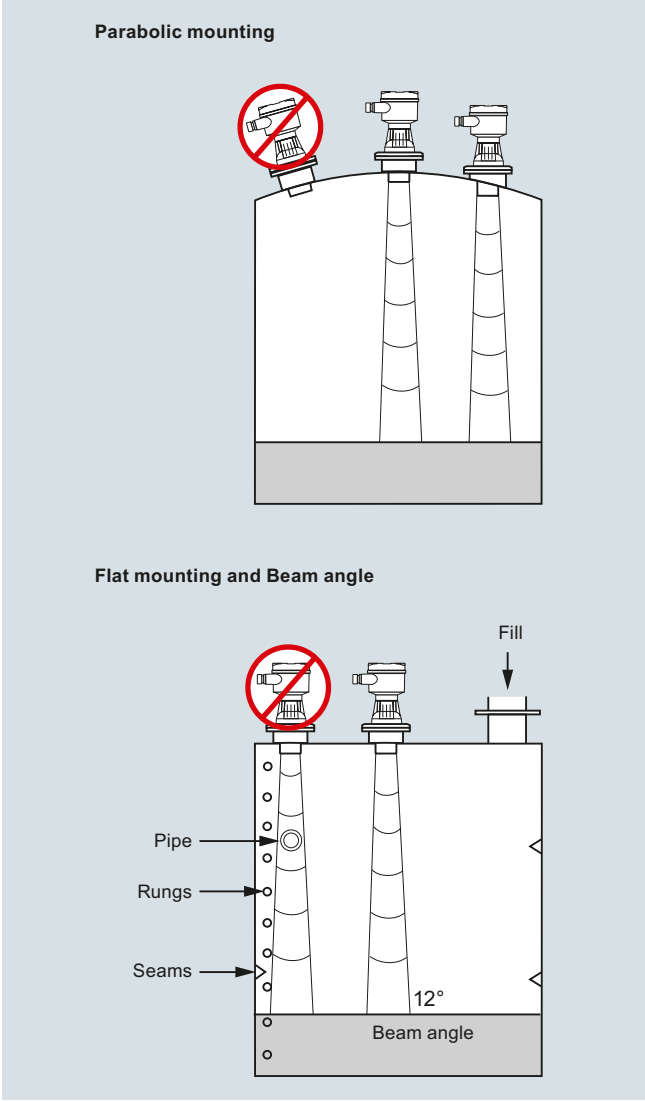

Pointek ULS200 mounting

© Siemens 2020

Technical specifications

Mode of operation	
Measuring principle	Ultrasonic level switch
Measuring range	
Measuring range in liquids	0.25 ... 5 m (0.8 ... 16.4 ft)
Measuring range in bulk solids	0.25 ... 3 m (0.8 ... 9.8 ft)
Output	
AC Version (relay)	2 SPDT Form C contacts, rated 5 A at 250 V AC or 30 V DC, resistive load; rated 1 A at 48 V DC resistive load
DC Version (relay)	2 SPDT Form C contacts, rated 5 A at 30 V DC, resistive load; rated 1 A at 48 V DC resistive load
DC Version (transistor)	2 switches, rated max. 100 mA, 48 V DC
Accuracy	
AC/DC version	
• Resolution	3 mm (0.1 inch)
• Repeatability	0.25 % of measuring range
Rated operation conditions	
Installation conditions	
• Location	Indoors/outdoors
• Beam angle	12°
Ambient conditions	
• Ambient temperature	-40 ... +60 °C (-40 ... +140 °F)
• Storage temperature	-40 ... +60 °C (-40 ... +140 °F)
• If mounted in metal threads	-20 ... +60 °C (-5 ... +140 °F)
Medium conditions	
• Process pressure	0.5 bar (7.25 psi) max.

Design	
Material	Polycarbonate with gasket
Weight	Approx. 1.5 kg (3.3 lb)
Transducer material	PVDF or ETFE copolymer
Threaded mounting	2" NPT [(Taper), ANSI/ASME B1.20.1] R 2" [(BSPT), EN 10226] or G 2" [(BSPP), EN ISO 228-1]
• Optional flange adapter	For 3" ASME, DN 65, PN 10, and JIS 10 K3B
Sanitary mounting	4" sanitary fitting clamp
Power supply	
AC version	100 ... 230 V AC, ± 15 %, 50/60 Hz, max. 12 VA, 5 W
DC version	18 ... 30 V DC, 3 W
Displays and controls	
Display	LCD, three digits, 9 mm (0.35 inch) high, for display of distance between sensor face and material, multi-segment graphic for operating state
Memory	EEPROM, non-volatile
Programming	2 keys
Electronics/enclosure	Connection: terminal block, max. 2.5 mm^2 (14 AWG) solid/1.5 mm^2 (16 AWG) stranded
Degree of protection	IP67/Type 6/NEMA 6
Cable inlet	2 x ½" NPT or 2 x PG 13.5
Certificates and approvals	CE, CSA $_{US/C}$, FM

© Siemens 2020

Selection and ordering data

	Article No.
Pointek ULS200 Ultrasonic point level switch ↗	**7ML1510-**
Non-contact, 5 m (16.4 ft) range, for bulk solids, liquids, and slurries.	■ ■ ■ **0** ■
↗ Click on the Article No. for the online configuration in the PIA Life Cycle Portal.	
Power supply	
24 V DC, relay output	**1**
24 V DC, transistor output	**2**
100 ... 230 V AC, relay output	**3**
Approvals	
CE, RCM, CSA Class I, II, Div. 2[1]	**J**
CE, RCM, $CSA_{us/c}$, FM	**K**
Transducer/Process connection	
ETFE, 2" NPT [(Taper), ANSI/ASME B1.20.1]	**A**
EFTE, R 2" [(BSPT), EN 10226]	**B**
EFTE, G 2" [(BSPP), EN ISO 228-1]	**C**
PVDF copolymer, 2" NPT [(Taper), ANSI/ASME B1.20.1]	**E**
PVDF copolymer, R 2" [(BSPT), EN 10226]	**F**
PVDF copolymer, G [(BSPP), EN ISO 228-1]	**G**
PVDF copolymer, 4" sanitary mounting[2]	**J**
Enclosure/cable inlet	
Polycarbonate	
• Cable inlet PG 13.5	**1**
• Cable inlet ½" NPT	**2**

[1] Available with Enclosure/cable inlet option 2 only.
[2] Available with Approvals option K only.

Further designs	Order code
Please add "**-Z**" to Article No. and specify Order code(s)	
Stainless steel tag [69 x 50 mm (2.71 x 1.97 inch)]: Measuring-point number/identification (max. 27 characters) specify in plain text	**Y15**
Operating Instructions	
All literature is available to download for free, in a range of languages, at	

http://www.siemens.com/processinstrumentation/documentation

Accessories	Article No.
Tag, stainless steel, 12 x 45 mm (0.47 x 1.77 inch), one text line, suitable for enclosures	**7ML1930-1AC**
Universal Box Bracket Mounting Kit	**7ML1830-1BK**
3" ASME, DN 65 PN 10, JIS 10K 3B ETFE Flange adapter for 2" NPT	**7ML1830-1BT**
3" ASME, DN 65 PN 10, JIS 10K 3B ETFE Flange adapter for 2" BSPT	**7ML1830-1BU**
2" BSP nylon plastic locknut	**7ML1830-1DQ**
2" NPT nylon plastic locknut	**7ML1830-1DT**
4" sanitary mounting clamp	**7ML1830-1BR**
Spare Parts	
Polycarbonate Lid	**7ML1830-1LG**

Options

Flange adapter for mating 2" NPT or 2" BSP process connections to 3" ASME, DN 65 PN 10 and JIS 10K 3B flanges

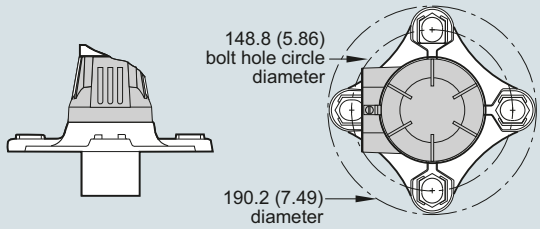

Pointek ULS200 optional flange adapter, dimensions in mm (inch)

4

© Siemens 2020

Dimensional drawings

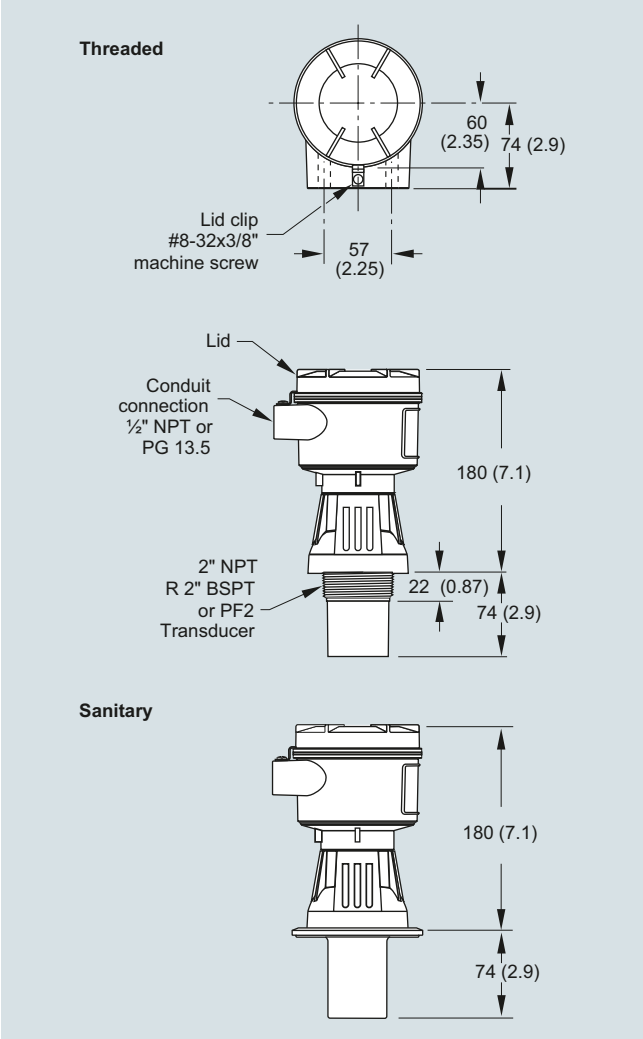

Pointek ULS200, dimensions in mm (inch)

Circuit diagrams

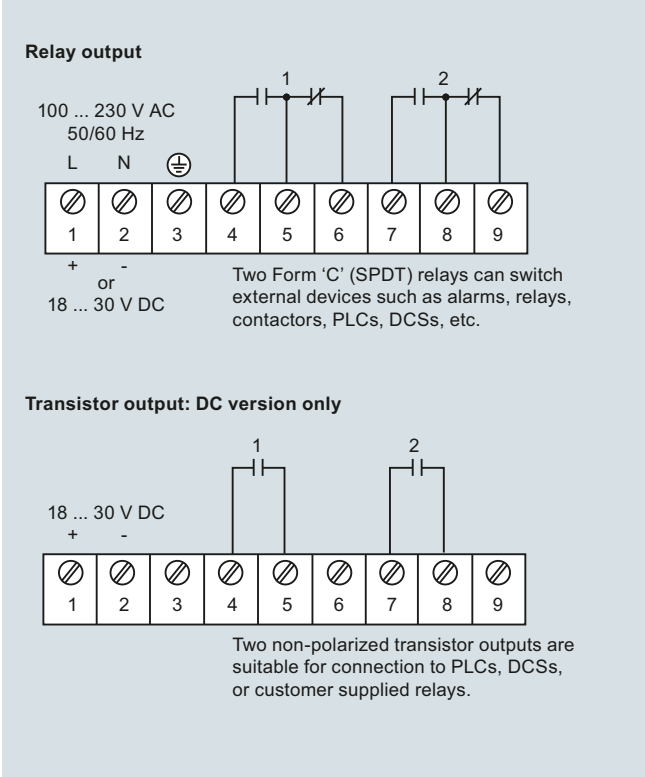

Pointek ULS200 connections

© Siemens 2020

Overview

After driving the market in ultrasonic level controllers for the past 40 years, Siemens has evolved its industry leading solutions to include control for 80 GHz radar sensors.

Siemens level controller portfolio provides high-accuracy open channel monitoring, flexible control for multiple-relay ultrasonics, and reliable controllers for long-range, high frequency radar.

Technical specifications

Controller Selection Guide

Criteria	SITRANS LT500	SITRANS LUT400	HydroRanger 200	MultiRanger 100/200
Range	Sensor dependent	0.3 ... 60 m (1 ... 196 ft), transducer and application dependent	15 m (50 ft) transducer and application dependent	15 m (50 ft) transducer and application dependent
Typical applications	Single or dual point, wet wells, reservoirs, flumes/weirs, chemical storage, liquid storage, hoppers, crusher bins, dry solids storage	Wet wells, reservoirs, flumes/weirs, chemical storage, liquid storage, hoppers, crusher bins, dry solids storage	Wet wells, flumes/weirs, bar screen control	Wet wells, flumes/weirs, bar screen control, hoppers, chemical storage, liquid storage, crusher bins, dry solids storage
Output	1, 3, 6 relays, two 4 ... 20 mA outputs (isolated)	4 ... 20 mA/HART 3 relays	6 relays standard, two 4 ... 20 mA outputs (isolated)	1 relay (option on MultiRanger 100) 3 relays standard 6 relays (option) Two 4 ... 20 mA outputs (isolated)
Communications	Options: • HART (additional 4 ... 20 mA output) • PROFIBUS PA • PROFIBUS DP • Modbus RTU	HART 7.0, USB, SIMATIC PDM	Built-in Modbus RTU/ASCII via RS 485 Options: • SIMATIC PDM • SmartLinx (PROFIBUS DP, DeviceNet)	• Built-in Modbus RTU or ASCII via RS 485 • Options: • SIMATIC PDM • SmartLinx (PROFIBUS DP, DeviceNet)
Power specifications	AC version: 100 ... 230 V AC ± 15 %, 50/60 Hz, 36 VA/17 W DC version: 12 ... 30 V DC, 20 W	AC version: 100 ... 230 V AC ± 15 %, 50/60 Hz, 36 VA Fuse: 5 x 20 mm, Slow Blow, 0.25 A, 250 V DC version: 10 … 32 V DC, 10 W Fuse: 5 x 20 mm, Slow Blow, 1.6 A, 125 V	AC version: 100 ... 230 V AC ± 15 %, 50/60 Hz, 36 VA/17 W DC version: 12 ... 30 V DC, 20 W	AC version: 100 ... 230 V AC ± 15 %, 50/60 Hz, 36 VA/17 W DC version: 12 ... 30 V DC, 20 W
Approvals	CE, $CSA_{US/C}$, UL Listed, FM, RCM	CE, $CSA_{US/C}$, UL Listed, FM, RCM, LR, ABS, MCERTS	CE, $CSA_{US/C}$, UL Listed, FM, RCM, MCERTS	CE, $CSA_{US/C}$, UL Listed, FM, RCM

© Siemens 2020

Overview

SITRANS LT500 is a versatile, single and multi-vessel level monitor/controller for virtually any application in a wide range of industries.

Benefits

- Easy to use HMI display with local four-button programming, menu-driven parameters, and Wizard support for key applications.
- English, German, French, Spanish, Chinese, Italian, Portuguese, Japanese, Danish, Dutch, Swedish, Finnish, Polish, and Russian texts on the HMI.
- Removable terminal blocks for ease of wiring.
- Digital input for back-up level override from point level device.
- Communication options for HART, Modbus RTU, PROFIBUS PA, PROFIBUS DP and ProfiNet.
- Single or dual point level monitoring.
- Auto False-Echo Suppression for fixed obstruction avoidance.
- Up to 6 independent programmable relays for pump control, alarms, or remote totalization.
- Level, volume, and flow measurements in open channels, differential control, extended pump control, and alarm functions.
- Wall and panel mounting options.

Application

SITRANS LT500 can be used with SITRANS LR110, LR120, Probe LU240 or any level device generating a mA signal. SITRANS LT500 offers true dual point monitoring and digital communications. SITRANS LT500 is low maintenance and economical. With its advanced control functions, it can operate pumps during lower cost time periods and manage pump rosters for efficiency.

SITRANS LT500 will monitor open channel flow and features advanced relay alarming and pump control functions as well as volume conversion.

- Key Applications: wet wells, flumes/weirs, bar screen control, hoppers, chemical storage, liquid storage, crusher bins, dry solids storage

Design

SITRANS LT500 is available in wall or panel mounting options.

© Siemens 2020

Technical specifications

Sensor input	
Number of inputs	1 or 2
Terminal voltage	Max. 26 V, Min. 18 V (0 ... 22.6 mA)
Wiring	2 conductor, twisted, shielded, 0.5 ... 0.75 mm² (22 ... 18 AWG)
Max. cable length	500 m (1 640.42 ft)
Sensor input communication	• 4 ... 20 mA • HART protocol, for supported sensors: SITRANS LR110, LR120, SITRANS Probe LU240
4 ... 20 mA sensor input	
• Resolution	0.025 % of full scale
• Accuracy	0.1 % of full scale
HART sensor input	Resolution and accuracy are dependent on connected sensor
Discrete input	
Quantity	2 (1 additional available on optional HART communication card)
Switching threshold, low	0 ... 0.5 V DC
Switching threshold, high	10 ... 50 V DC
Input current	Max. 3 mA
Bias voltage	24 V
Analog output	
Quantity	2
Range	0 ... 20 mA or 4 ... 20 mA
• Max. load	750 Ω
• Resolution	0.1 % of range
Accuracy	±20 µA
Wiring	2 conductor, twisted, shielded, 0.5 ... 0.75 mm² (22 ... 18 AWG)
Relay output	
Quantity	Up to 6, 4 form A and 2 form C
Rating	5 A at 250 V AC, non-inductive

Rated operating conditions	
Installation conditions	
• Location	Indoor/outdoor
• Installation category	II
• Pollution degree	4
Ambient conditions	
• Ambient temperature	-20 ... +50 °C (-4 ... +122 °F)
• Storage temperature	-20 ... +50 °C (-4 ... +122 °F)
Design	
Weight	
• Wall mount	1.22 kg (2.68 lb)
• Panel mount	1.35 kg (2.97 lb)
Enclosure	
• Material	Polycarbonate
• Degree of protection	
- Wall mount	IP65/Type 4X/NEMA 4X
- Wall mount	IP54/Type 3/NEMA 3
Display and control	
LCD display	60 x 40 mm (2.36 x 1.57 inch) LCD, 240 x 160 pixels resolution
Menu navigation	4 push button keys
Memory card	8 GB Industrial micro SD
Power supply	
AC version	100 ... 230 V AC, ±15 %, 50/60 Hz, 36 VA (17 W)
DC version	12 ... 30 V DC (20 W)
Certificates and approvals	• CE, RCM • FM, $_{C}$CSA$_{US}$, $_{C}$UL$_{US}$
Communication	
Service interface	USB 2.0 mini A cable
Optional Fieldbus	• HART, with Active/Passive 4 ... 20 mA • Modbus RTU • PROFIBUS PA • PROFIBUS DP • ProfiNet

© Siemens 2020

Selection and ordering data

	Article No.
SITRANS LT500 ↗	**7ML60-**
Continuous, non-contact, for liquids, slurries, and solids. Monitors level, volume, and volume flow, for virtually any application in a wide range of process industries.	■ ■ - ■ ■ ■ ■ ■ - ■ A A ■
↗ Click on the Article No. for the online configuration in the PIA Life Cycle Portal.	
Product type	
HydroRanger	**0**
MultiRanger	**1**
Feature set	
Level, volume, and flow	**3**
Sensor input type	
4 ... 20 mA input(s)	**0**
Number of measurement points	
Single point version	**A**
Dual point version	**B**
Relay output	
1 relay (1 Form A), 250 V AC	**A**
3 relays (2 Form A, 1 Form C), 250 V AC	**B**
6 relays (4 Form A, 2 Form C), 250 V AC	**C**
Mounting, enclosure design	
Wall mount, standard enclosure	**0**
Wall mount, 4 entries, M20 cable glands included	**1**
Panel mount	**2**
Type of protection	
Non Ex (general purpose) $_{C}CSA_{US}$, FM, CE, RCM	**0**
Removable data storage	
Included, (8 GB micro SD)	**1**
Input voltage	
10 ... 30 V DC	**2**
100 ... 230 V AC	**3**

	Order code
Further designs	
Please add "**-Z**" to Article No. and specify Order code(s).	
Stainless steel tag [13 x 45 mm (0.5 x 1.75 inch)]: Tag (device parameter, max. 32 characters) plate stainless steel 304/1.4301	**Y15**
Mass storage	
Enable mass storage function with SD card (Not available for USA)	**Y80**
Certificates	
Factory test certificate - M to DIN 55350, Part 18	**C19**
Factory certificate 2.2 (EN 10204) - wetted parts	**C14**
Communication	
4 ... 20 mA, active output, with HART	**F01**
Modbus RTU	**F04**
PROFIBUS PA	**F05**
PROFIBUS DP	**F06**
ProfiNet	**F07**
Specials	
Special design	**Y99**
For customs, contact a local sales person. For more information please visit http://www.automation.siemens.com/aspa_app	
Operating Instructions	
All literature is available to download for free, in a range of languages, at http://www.siemens.com/processinstrumentation/documentation	
Optional equipment	Article No.
Tag, stainless steel, 12 x 45 mm, one text line, (max. 16 characters)	**7ML1930-1AC**
Barriers in a NEMA 4X/IP65 enclosure	**A5E50255823**
Barrier suitable for LR1xx & LU240 (STAHL: 9001/01-280-110-101)	**A5E50113513**
Sunshield, 304 Stainless steel	**7ML1930-1GA**
SITRANS RD100, loop powered display - see Chapter 7	**7ML5741-.....-.**
SITRANS RD150, remote digital display for 4 ... 20 mA and HART devices - see Chapter 7	**7ML5742-.....-....**
SITRANS RD200, universal input display with Modbus conversion - see Chapter 7	**7ML5740-.....-..**
SITRANS RD300, dual line display with totalizer and linearization curve and Modbus conversion - see Chapter 7	**7ML5744-.....-..**
Spare parts	
Replacement motherboard, single point, includes DC power module	**A5E50113558**
Replacement motherboard, dual point, includes DC power module	**A5E50113557**
Replacement motherboard, single point, includes AC power module	**A5E50113542**
Replacement motherboard, dual point, includes AC power module	**A5E50113543**
Replacement lid with 4 button HMI	**A5E50113559**
Replacement lid with 4 button HMI panel mount version	**A5E50113560**
Retrofit kit for wall mount to panel mount version	**A5E50114010**
Replacement SD card	**A5E50113554**
HART communications module	**A5E50113564**
PROFIBUS PA communications module	**A5E50113568**
Modbus RTU communications module	**A5E50113565**
PROFIBUS DP communications module	**A5E50113567**
ProfiNet communications module	**A5E50113569**

© Siemens 2020

Dimensional drawings

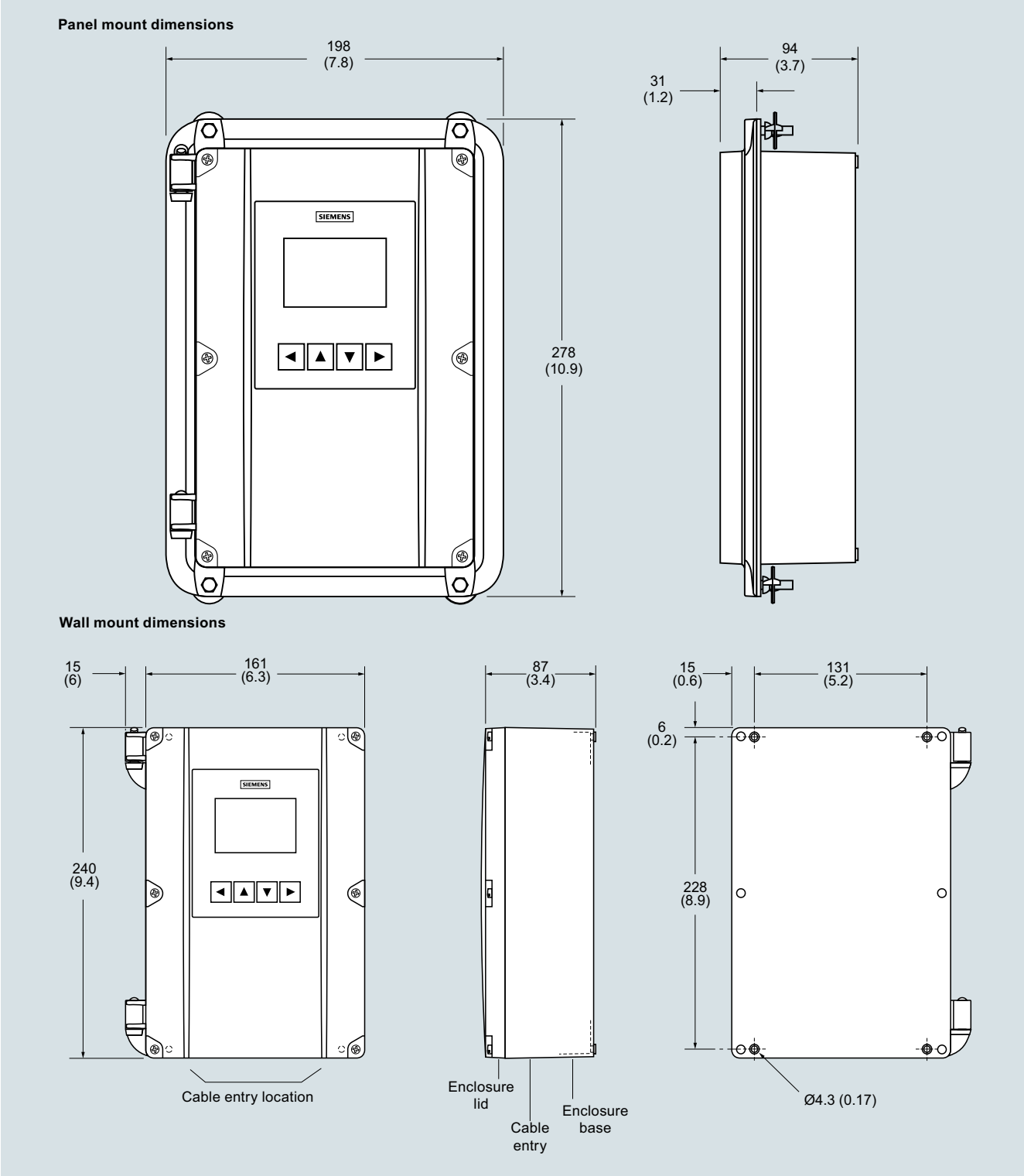

SITRANS LT500, dimensions in mm (inch)

© Siemens 2020

Circuit diagrams

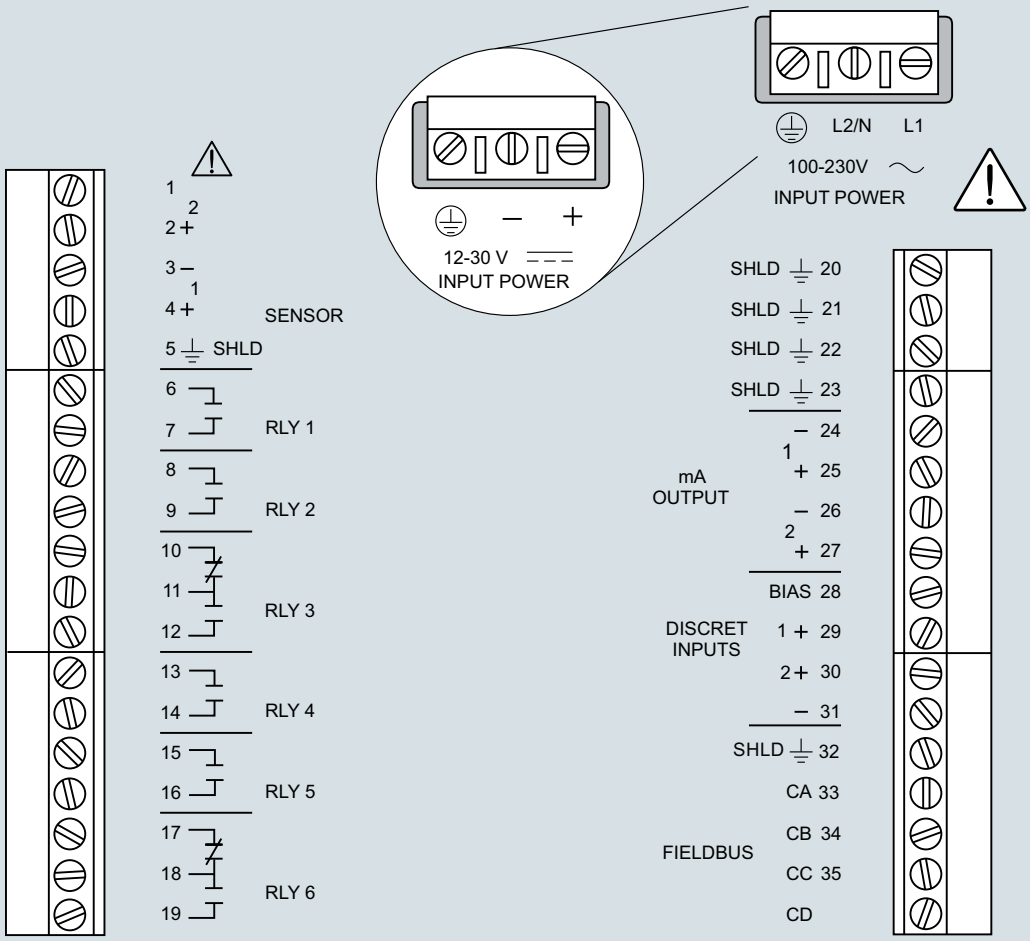

Relays shown in released state

Note:

1. Use 2-core copper wire, twisted, with shield, for expansion up to 365 m (1 200 ft). Route cable in grounded metal conduit, separate from other cables.
2. Verify that all system components are installed in accordance with instructions.
3. Connect all cable shields to the SITRANS LT500 shield connections. Avoid differential ground potentials by not connecting cable shields to ground (earth) anywhere else.
4. Keep exposed conductors on shielded cables as short as possible to reduce noise on the line caused by stray transmissions and noise pickup.

SITRANS LT500 connections

© Siemens 2020

Overview

The SITRANS LUT400 series controllers are compact, single point, long-range ultrasonic controllers for continuous level or volume measurement of liquids, slurries, solids, and high accuracy monitoring of open channel flow.

Benefits

- Small 1/2 DIN enclosure [144 h x 144 d x 146 w mm (5.7 x 5.7 x 5.75 inch)] with standard universal mounting bracket for wall, pipe, and DIN rail, plus an optional panel mount
- Easy to use HMI display with local four-button programming, menu-driven parameters, and Wizard support for key applications
- English, German, French, Spanish, Chinese, Italian, Portuguese, and Russian texts on the HMI.
- Level, Volume, OCM Flow monitoring
- Three relays combined with a suite of pump, alarm, and relay control features
- HART Communications
- EDDs for SIMATIC PDM, AMS Device Manager, and Field Communicator 375/475, plus DTMs for FDTs (Field Device Tools)
- Web browser for local programming from an intuitive web-based interface
- Two discrete inputs for backup level override and pump interlock functions
- Echo profile and trend views from the local display
- Patented digital receiver for improved performance in electrically noisy applications (close proximity to VSDs)
- Real time clock with daylight savings time, supporting an integrated datalogger and energy saving algorithms for minimizing pump operation during high cost energy periods
- Removable terminal blocks for ease of wiring
- MCERTS Certified for Open Channel Flow

Application

The SITRANS LUT400 comes in three different models, depending on the application, level of performance and functionality required:

- SITRANS LUT420 Level Controller: Level or volume measurement of liquids, slurries, and solids, as well as basic pump control functions, and basic data logging capability
- SITRANS LUT430 Level, Pump and Flow Controller: Includes all features of the LUT420 plus a full suite of advanced pump control and alarm functionality, open channel flow monitoring, and basic flow data logging capability
- SITRANS LUT440 High Accuracy OCM: Our most featured, highest accuracy model. Includes all features of the LUT430, plus the industry's best accuracy (± 1 mm within 3 m), full suite of advanced control functionality, and enhanced flow logging capability
- Key Applications: wet wells, reservoirs, flumes/weirs, chemical storage, liquid storage, hoppers, crusher bins, dry solids storage

© Siemens 2020

Technical specifications

Mode of Operation	Ultrasonic level, volume, pump, and open channel flow
Measuring range	0.3 … 60 m (1 … 196 ft), transducer dependent
Input	
Discrete	0 ... 50 V DC switching level Logical 0 ≤ 10 V DC Logical 1 = 10 ... 50 V DC Max. 3 mA
Output	
Transducer frequency	10 ... 52 kHz
Ultrasonic transducer	Compatible transducers: All Echo-Max and ST-H series transducers
Relays	• 1 SPDT Form C, NO or NC relay, rated 1A at 250 V AC, non-inductive and 3A at 30 V DC • 2 SPST Form A, NO relays, rated 5A at 250 V AC, non-inductive and 3 A at 30 V DC
mA output	4 … 20 mA, isolated
Max. load	600 Ω max. in ACTIVE mode, 750 Ω max. in PASSIVE mode
Resolution	0.1 % of range
Accuracy	
Error in measurement	• Standard operation: ± 1 mm (0.04 inch) plus 0.17 % of measured distance • High accuracy OCM: ± 1 mm (0.04 inch), within 3 m (9.84 ft) range
Resolution	• Standard operation: 0.1 % of range or 2 mm (0.08 inch), whichever is greater • High accuracy OCM: 0.6 mm (0.02 inch), within 3 m (9.84 ft) range
Temperature compensation	• -40 ... +150 °C (-40 ... +300 °F) • Integral temperature sensor in transducer • External TS-3 temperature sensor (optional) • Programmable fixed temperature values
Rated operating conditions	
Installation conditions	
• Location	Indoor/outdoor
• Installation category	II
• Pollution degree	4
Ambient conditions	
• Ambient temperature (enclosure)	-20 … +50 °C (-4 … +122 °F)
• Storage temperature	-20 … +50 °C (-4 … +122 °F)

Design	
Weight	
• Enclosure with display lid	1.3 kg (2.87 lb)
• Enclosure with blank lid	1.2 kg (2.65 lb)
Material (enclosure)	Polycarbonate
Degree of protection	
• Enclosure with display or blank lid	IP65/Type 4X/NEMA 4X
• Enclosure with blank lid and knock-out removed	IP20
Remote display lid	IP65/Type 3/NEMA 3
Cable	
Transducer and mA output signal	• Transducer, mA output: 2 copper conductors, twisted, with foil shield/drain wire, 300 V 0.5 … 0.75 mm² (22 … 18 AWG) • Relay/power to be copper conductors per local requirements to meet 250 V 5 A contact rating
Max. separation between transducer and transceiver	365 m (1 200 ft)
Displays and controls	60 x 40 mm (2.36 x 1.57 inch) removable LCD, 240 x 160 pixels resolution, operational up to 5 m from enclosure base
Programming	
• Primary	4 Local push buttons
• Secondary	• PC running SIMATIC PDM • PC running Emerson AMS Device Manager • PC running a web browser • PC running a Field Device Tool (FDT) • Field Communicator 375/475 (FC375/FC475)
Memory	• 512 kB flash EPROM • 1.5 MB flash for data logging
Power supply	
AC version	100 ... 230 V AC ± 15 %, 50/60 Hz, 36 VA Fuse: 5 x 20 mm, Slow Blow, 0.25 A, 250 V
DC version	10 … 32 V DC, 10 W Fuse: 5 x 20 mm, Slow Blow, 1.6 A, 125 V
Certificates and approvals	
General	$CSA_{US/C}$, CE, FM, UL listed, RCM, EAC, KCC, MCERTS certified for Open Channel Flow
Hazardous	
• Non-incendive (Canada)	CSA Class I, Div. 2, Groups A, B, C, D; Class II, Div. 2, Groups F, G; Class III
• Shipping	Lloyd's Register, ABS
Communication	HART 7.0, USB

© Siemens 2020

Technical specifications (continued)

		SITRANS LUT420	SITRANS LUT430	SITRANS LUT440
Category	**Feature**	**Level Controller**	**Level, pump and flow controller**	**High accuracy OCM controller**
Operations	Level, space, and distance measurement	✓	✓	✓
	Open channel flow measurement		✓	✓
	Volume conversion	✓	✓	✓
Specifications	Compatible with EchoMax and ST-H transducers	✓	✓	✓
	Standard accuracy: ± 1 mm + 0.17 % of measured distance	✓	✓	✓
	High accuracy: ± 1 mm within 3 meters			✓
	Mounting options: wall or panel, pipe, DIN-rail	✓	✓	✓
Data logging and communications	HART communications	✓	✓	✓
	4 ... 20 mA output (active and passive)	✓	✓	✓
	Integrated datalogger for measurement value and alarms	✓	✓	✓
	Integrated datalogger for fixed rate flow logging		✓	✓
	Integrated datalogger for variable rate flow logging triggered by changes in flow condition			✓
	Daily data logging for maximum, minimum and average flow, daily totalized volume, and minimum and maximum temperature		✓	✓
Flow monitoring	High accuracy open channel flow measurement			✓
	9 digit daily and running flow totalizers		✓	✓
	High and low flowrate alarms		✓	✓
	External totalizer and sampler control		✓	✓
	MCERTS Class 1 Certification			✓
	MCERTS Class 2 Certification		✓	
Pump control	Energy saving algorithms for pump control		✓	✓
	Wall cling reduction	✓	✓	✓
	Pump run-on functionality		✓	✓
	Pump start and power resumption delays		✓	✓
	Alternate duty pump routines	✓	✓	✓
	Fixed duty and service ratio pump routines		✓	✓
	Pumped volume totalizer		✓	✓
	Submergence detection	✓	✓	✓
	Discrete input pump interlocks		✓	✓
	Time to spill calculation		✓	✓

© Siemens 2020

Selection and ordering data

	Article No.
SITRANS LUT420 and LUT430 ↗	**7ML5050-**
Continuous, non-contact, 60 m (197 ft) range. Monitors level, volume, and volume flow in liquids, slurries, and solids. With high accuracy volume flow and built in data logging.	**0 ■ ■ ■ ■ - ■ ■ ■ 0**
↗ Click on the Article No. for the online configuration in the PIA Life Cycle Portal.	
Model	
SITRANS LUT420 - Level controller	**A**
SITRANS LUT430 - Level, Pump & Flow controller	**B**
Enclosure display options	
With display	**A**
With remote panel mount display [Includes panel mount cable extension, 2.5 m (8.2 ft)]	**B**
No display (blank lid provided)	**C**
Note: Enclosure includes back-plate for wall and pipe mounting, and an integrated clip for DIN-rail mounting. DIN-rail mounting for standard TS35 x 7.5 and TS35 x 15 mm DIN-rail to IEC 60715, EN 60715	
Input voltage	
100 ... 230 V AC ± 15 %	**1**
10 ... 32 V DC	**2**
Cable inlet	
3 cable inlets, cable glands not supplied	**1**
3 cable inlets, 3 M20 plastic cable glands supplied	**2**
Number of measurement points	
Single point system (includes one transducer input, one mA output, and one external temperature sensor input)	**1**
Communications and I/O	
HART, 2 discrete inputs, 3 relays	**D**
Approvals	
General purpose CE, FM, $CSA_{US/C}$, UL, RCM, EAC, KCC	**A**
Hazardous locations CSA Class I, II, III, Div. 2, Groups A, B, C, D, F, G	**C**
Further designs	Order code
Please add "**-Z**" to Article No. and specify Order code(s).	
Manufacturer's test certificate M to DIN 55350, Part 18 and to ISO 9000	**C11**
Stainless steel tag [69 x 50 mm (2.71 x 1.97 inch)]: Measuring-point number/identification (max. 27 characters) specify in plain text	**Y15**
Namur NE43 failsafe setting - device preset to failsafe < 3.6 mA	**N07**
Operating Instructions	
All literature is available to download for free, in a range of languages, at	

http://www.siemens.com/processinstrumentation/documentation

	Article No.
Accessories	
Tag, stainless steel, 12 x 45 mm (0.47 x 1.77 inch), one text line, suitable for enclosure	**7ML1930-1AC**
TS-3 Temperature Sensor - see TS-3 on page 4/226	**7ML1813-...**
Panel mount cable extension, 2.5 m (8.2 ft)	**7ML1930-1GF**
Qty 3 cable glands and retaining nuts	**7ML1930-1GB**
USB cable, 2 m (6.56 ft) - Standard USB-A to USB-mini B	**7ML1930-1GD**
Hart modem/USB (for use with a PC and SIMATIC PDM)	**7MF4997-1DB**
Sunshield, 304 stainless steel	**7ML1930-1GE**
SITRANS RD100, loop powered display - see Chapter 7	**7ML5741-...**
SITRANS RD150, remote digital display for 4 ... 20 mA and HART devices - see Chapter 7	**7ML5742-.....-....**
SITRANS RD200, universal input display with Modbus conversion - see Chapter 7	**7ML5740-...**
SITRANS RD300, dual line display with totalizer and linearization curve and Modbus conversion - see Chapter 7	**7ML5744-...**
SITRANS RD500 web, universal remote monitoring solution for instrumentation - see Chapter 7	**7ML5750-...**
Spare parts	
Panel mount retrofit kit (convert standard unit with display to panel mount version)	**7ML1830-1PA**
Terminal block replacement kit (5 piece kit with one of each removable terminal)	**7ML1830-1PB**
Wall/Pipe mount plate	**7ML1830-1PC**
Enclosure (include blank label)	**7ML1830-1PD**
SITRANS LUT400 Lid (with Display)	**7ML1830-1PE**
SITRANS LUT400 Lid (blank)	**7ML1830-1PF**
Fuse - AC (0.25 A, 250 V, Slow Blow)	**7ML1830-1PG**
Fuse - DC (1.6 A, 125 V, Slow Blow)	**7ML1830-1PH**
Panel mount gasket and fastener kit	**7ML1830-1PK**
DIN-rail clip	**7ML1830-1PL**
LUT420, assembly, DC, board stack with cradle, general purpose	**A5E42824483**
LUT420, assembly, AC, board stack with cradle, general purpose	**A5E42824562**
LUT430, assembly, DC, board stack with cradle, general purpose	**A5E42824564**
LUT430, assembly, AC, board stack with cradle, general purpose	**A5E42824568**
LUT420, assembly, DC, board stack with cradle, hazardous	**A5E42824561**
LUT420, assembly, AC, board stack with cradle, hazardous	**A5E42824563**
LUT430, assembly, DC, board stack with cradle, hazardous	**A5E42824565**
LUT430, assembly, AC, board stack with cradle, hazardous	**A5E42824570**

© Siemens 2020

Selection and ordering data

	Article No.
SITRANS LUT440 ↗	**7ML5050-**
Continuous, non-contact, 60 m (197 ft) range. Monitors level, volume, and volume flow in liquids, slurries, and solids. With high accuracy volume flow and built in data logging.	**0 ■ ■ ■ ■ - ■ ■ ■ 0**
↗ Click on the Article No. for the online configuration in the PIA Life Cycle Portal.	
Model	
SITRANS LUT440 - High accuracy Open Channel Monitor[1]	**C**
Enclosure display options	
With display	**A**
With remote panel mount display [includes panel mount cable extension, 2.5 m (8.2 ft)]	**B**
No display (blank lid provided)	**C**
Note: Enclosure includes back-plate for wall and pipe mounting, and an integrated clip for DIN-rail mounting. DIN-rail mounting for standard TS35 x 7.5 and TS35 x 15 mm DIN-rail to IEC 60715, EN 60715	
Input voltage	
100 ... 230 V AC ± 15 %	**1**
10 ... 32 V DC	**2**
Cable inlet	
3 cable inlets, cable glands not supplied	**1**
3 cable inlets, 3 M20 plastic cable glands supplied	**2**
Number of measurement points	
Single point system (includes one transducer input, one mA output, and one external temperature sensor input)	**1**
Communications and I/O	
HART, 2 discrete inputs, 3 relays	**D**
Approvals	
General purpose CE, FM, $CSA_{US/C}$, UL, RCM, EAC, KCC	**A**
Hazardous locations CSA Class I, II, III, Div. 2, Groups A, B, C, D, F, G	**C**

[1] Compatible with all EchoMax Transducers. High accuracy OCM performance with the use of an XRS-5 transducer and TS-3 temperature sensor (each sold separately).

Further designs	Order code
Please add "**-Z**" to Article No. and specify Order code(s).	
Manufacturer's test certificate M to DIN 55350, Part 18 and to ISO 9000	**C11**
Stainless steel tag [69 x 50 mm (2.71 x 1.97 inch)]: Measuring-point number/identification (max. 27 characters) specify in plain text	**Y15**
Namur NE43 failsafe setting - device preset to failsafe < 3.6 mA	**N07**
Operating Instructions	
All literature is available to download for free, in a range of languages, at	

http://www.siemens.com/processinstrumentation/documentation

	Article No.
Accessories	
Tag, stainless steel, 12 x 45 mm (0.47 x 1.77 inch), one text line, suitable for enclosure	**7ML1930-1AC**
TS-3 Temperature Sensor - see TS-3 on page 4/226	**7ML1813-...**
Panel mount cable extension 2.5 m (8.2 ft)	**7ML1930-1GF**
Qty 3 cable glands and retaining nuts	**7ML1930-1GB**
USB cable 2 m (6.56 ft) - Standard USB-A to USB-mini B	**7ML1930-1GD**
HART modem/USB (for use with PC and SIMATIC PDM)	**7MF4997-1DB**
Sunshield, 304 stainless steel	**7ML1930-1GE**
SITRANS RD100, loop powered display - see Chapter 7	**7ML5741-...**
SITRANS RD150, remote digital display for 4 ... 20 mA and HART devices - see Chapter 7	**7ML5742-.....-....**
SITRANS RD200, universal input display with Modbus conversion - see Chapter 7	**7ML5740-...**
SITRANS RD300, dual line display with totalizer and linearization curve and Modbus conversion - see Chapter 7	**7ML5744-...**
SITRANS RD500 web, universal remote monitoring solution for instrumentation - see Chapter 7	**7ML5750-...**
Spare parts	
Panel mount retrofit kit (convert standard unit with display to panel mount version)	**7ML1830-1PA**
Terminal block replacement kit (5 piece kit with one of each removable terminal)	**7ML1830-1PB**
Wall/Pipe mount plate	**7ML1830-1PC**
Enclosure (include blank label)	**7ML1830-1PD**
SITRANS LUT400 Lid (with Display)	**7ML1830-1PE**
SITRANS LUT400 Lid (blank)	**7ML1830-1PF**
Fuse - AC (0.25 A, 250 V, Slow Blow)	**7ML1830-1PG**
Fuse - DC (1.6 A, 125 V, Slow Blow)	**7ML1830-1PH**
Panel mount gasket and fastener kit	**7ML1830-1PK**
DIN-rail clip	**7ML1830-1PL**
LUT440, assembly, DC, board stack with cradle, general purpose	**A5E42847453**
LUT440, assembly, AC, board stack with cradle, general purpose	**A5E42847455**
LUT440, assembly, DC, board stack with cradle, hazardous	**A5E42847454**
LUT440, assembly, AC, board stack with cradle, hazardous	**A5E42847456**

© Siemens 2020

Dimensional drawings

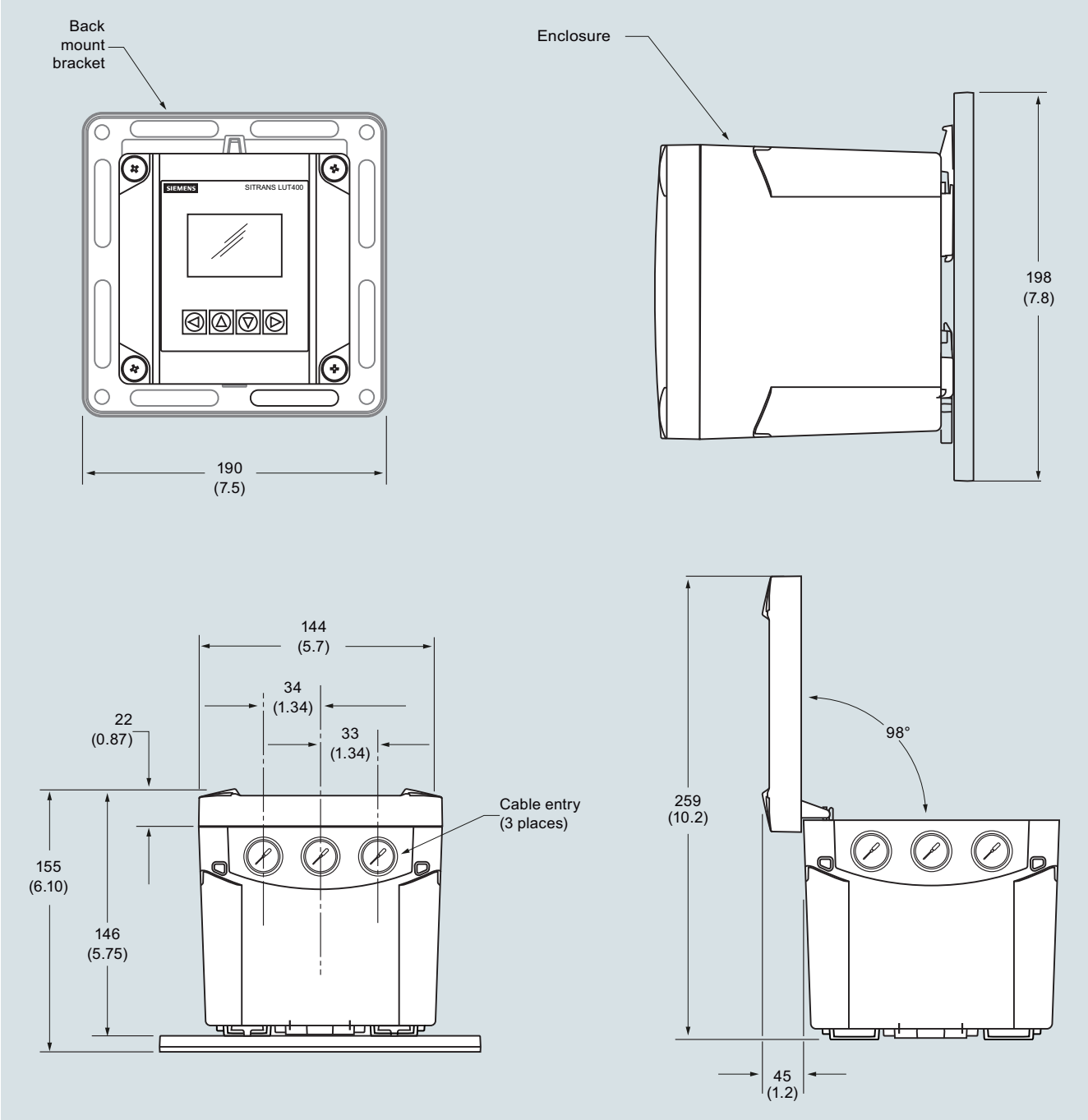

SITRANS LUT400, dimensions in mm (inch)

© Siemens 2020

Dimensional drawings (continued)

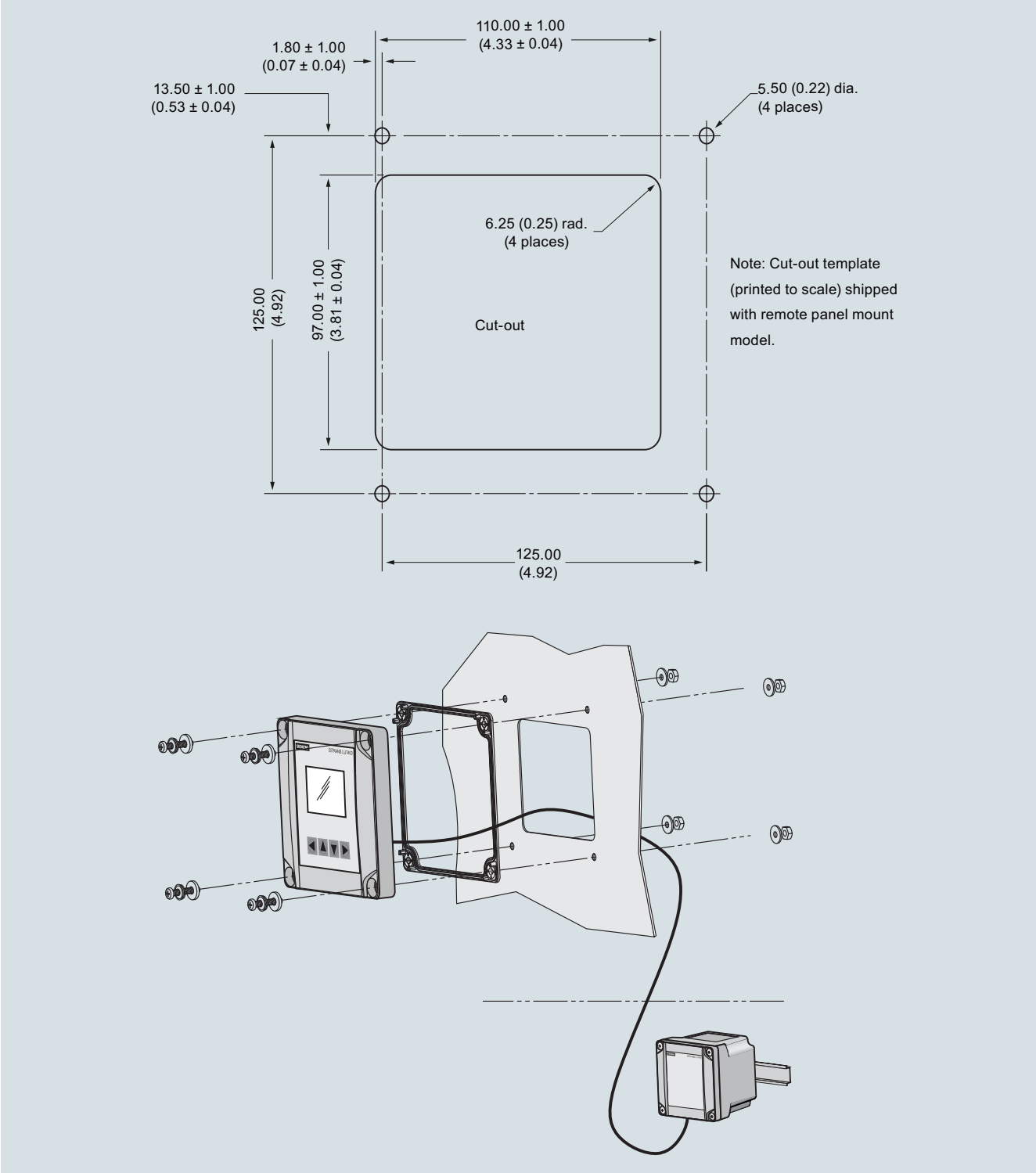

SITRANS LUT400, dimensions in mm (inch)

© Siemens 2020

Circuit diagrams

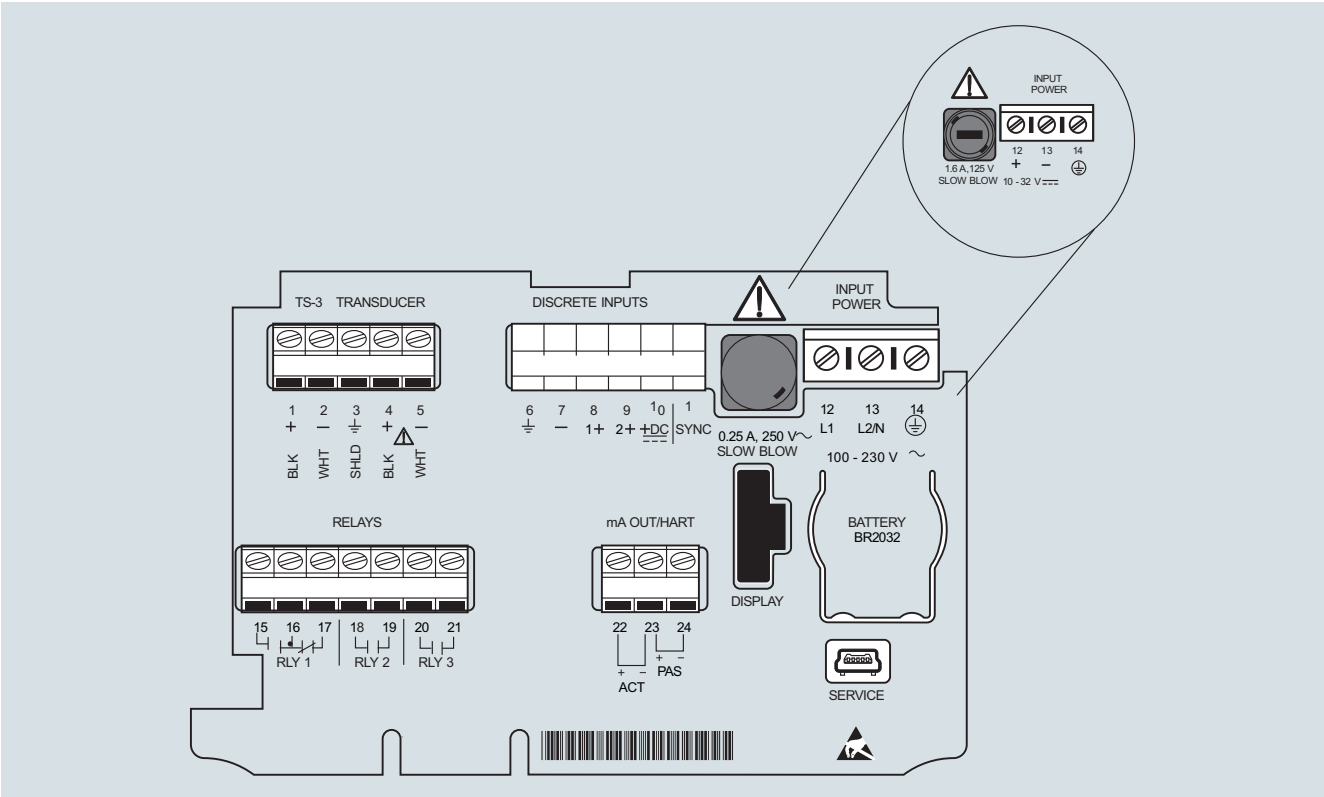

SITRANS LUT400 connections

© Siemens 2020

Overview

MultiRanger 200 HMI is a versatile short to medium-range ultrasonic single and multi-vessel level monitor/controller for virtually any application in a wide range of industries.

Benefits

- Easy to use HMI display with local four-button programming, menu-driven parameters, and Wizard support for key applications
- English, German, French, Spanish, Chinese, Italian, Portuguese, and Russian texts on the HMI
- Removable terminal blocks for ease of wiring
- Digital input for back-up level override from point level device
- Communication using built-in Modbus RTU via RS 485 and SIMATIC PDM configuration software
- Compatible with SmartLinx system: PROFIBUS DP, PROFINET (cyclic access of process values only), DeviceNet, Modbus TCP/IP, and EtherNet/IP
- Single or dual point level monitoring
- Auto False-Echo Suppression for fixed obstruction avoidance
- Differential amplifier transceiver for common mode noise reduction and improved signal-to-noise ratio
- Level, volume, and flow measurements in open channels, differential control, extended pump control, and alarm functions
- Wall and panel mounting options

Application

MultiRanger 200 HMI can be used with various materials, including, water, municipal waste, acids, woodchips, or on materials with high angles of repose. MultiRanger 200 HMI offers true dual point monitoring, digital communications with built-in Modbus RTU via RS 485, as well as compatibility with SIMATIC PDM, allowing PC configuration and set-up. MultiRanger 200 HMI features Sonic Intelligence advanced echo-processing software for increased reading reliability.

MultiRanger 200 HMI will monitor open channel flow and features more advanced relay alarming and pump control functions as well as volume conversion.

It is compatible with chemical-resistant EchoMax transducers that are approved for hostile environments.

- Key Applications: wet wells, flumes/weirs, bar screen control, hoppers, chemical storage, liquid storage, crusher bins, dry solids storage

Design

The MultiRanger 200 HMI is available in wall or panel mounting options.

© Siemens 2020

Technical specifications

Mode of Operation	
Measuring principle	Ultrasonic level measurement
Measuring range	0.3 ... 15 m (1 ... 50 ft)
Measuring points	1 or 2
Input	
Analog	0 ... 20 mA or 4 ... 20 mA, from alternate device, scalable
Discrete	10 ... 50 V DC switching level Logical 0 ≤ 0.5 V DC Logical 1 = 10 ... 50 V DC max. 3 mA
Output	
EchoMax transducer	44 kHz
Ultrasonic transducer	Compatible transducers: ST-H and EchoMax series XPS-10, XPS-15/15F, and XRS-5
Relays	Rating 5 A at 250 V AC, non-inductive
mA output	0 ... 20 mA or 4 ... 20 mA
• Max. load	750 Ω, isolated
• Resolution	0.1 % of range
Accuracy	
Error in measurement	0.25 % of range or 6 mm (0.24 inch), whichever is greater
Resolution	0.1 % of measuring range[1] or 2 mm (0.08 inch), whichever is greater
Temperature compensation	• -50 ... +150 °C (-58 ... +302 °F) • Integral temperature sensor • External TS-3 temperature sensor (optional) • Programmable fixed temperature values
Rated operating conditions	
Installation conditions	
• Location	Indoor/outdoor
• Installation category	II
• Pollution degree	4
Ambient conditions	
• Ambient temperature (housing)	-20 ... +50 °C (-4 ... +122 °F)
• Storage temperature	-20 ... +50 °C (-4 ... +122 °F)

Mode of Operation	
Design	
Weight	
• Wall mount	1.22 kg (2.68 lb)
• Panel mount	1.35 kg (2.97 lb)
Material (enclosure)	Polycarbonate
Degree of protection (enclosure)	
• Wall mount	IP65/Type 4X/NEMA 4X
• Panel mount	IP54/Type 3/NEMA 3
Electrical connection	
• Transducer and mA output signal	2-core copper conductor, twisted, shielded, 0.5 ... 0.75 mm² (22 ... 18 AWG), Belden 8760 or equivalent is acceptable
• Max. separation between transducer and transceiver	365 m (1 200 ft)
Displays and controls	60 x 40 mm (2.36 x 1.57 inch) LCD 240 x 160 pixels resolution
Power supply	
AC version	100 ... 230 V AC ± 15 %, 50/60 Hz, 36 VA (17 W)
DC version	12 ... 30 V DC (20 W)
Certificates and approvals	• CE, RCM, EAC, KCC[2] • FM, $CSA_{US/C}$, UL • CSA Class I, Div. 2, Groups A, B, C, and D, Class II, Div. 2, Groups F and G, Class III (wall mount only)
Communication	• RS 232 with Modbus RTU or ASCII via RJ-11 connector • RS 485 with Modbus RTU or ASCII via terminal strips • Optional: SmartLinx cards for - PROFIBUS DP-V1, PROFINET (cyclic access of process values only) - DeviceNet, Modbus TCP/IP, EtherNet/IP

[1] Program range is defined as the empty distance to the face of the transducer plus any range extension

[2] EMC performance available on request

© Siemens 2020

Selection and ordering data

	Article No.
MultiRanger 200 Ultrasonic level controller ↗	**7ML5033-**
Continuous, non-contact, 15 m (50 ft) range. Monitors level, volume, and open channel flow in liquids, slurries, and solids.	■ ■ ■ ■ ■ - ■ ■
↗ Click on the Article No. for the online configuration in the PIA Life Cycle Portal.	
Versions	
MultiRanger 200, level, volume, flow, and differential measurements	**2**
Mounting, enclosure design	
4 button HMI, Wall mount, standard enclosure	**D**
4 button HMI, Wall mount, 4 entries, 4 M20 cable glands included	**E**
4 button HMI, Panel Mount	**F**
Input voltage	
100 ... 230 V AC	**A**
12 ... 30 V DC	**B**
Number of measurement points	
Single point version	**0**
Dual point version	**1**
Data communications (SmartLinx)	
Without module	**0**
SmartLinx PROFIBUS DP V0 module	**2**
SmartLinx DeviceNet module	**3**
SmartLinx PROFIBUS DP V1 module	**4**
SmartLinx PROFINET module[2]	**5**
SmartLinx EtherNet/IP module	**6**
SmartLinx Modbus TCP/IP module See SmartLinx product page 4/348 for more information.	**7**
Output relays	
6 relays (4 Form A, 2 Form C), 250 V AC	**2**
Approvals	
General Purpose CE, FM, $CSA_{US/C}$, UL listed, RCM, EAC, KCC	**A**
CSA Class I, Div. 2, Groups A, B, C, and D; Class II, Div. 2, Groups F and G; Class III[1]	**B**

[1] Available with Mounting/Enclosure design options D or E.

[2] SmartLinx PROFINET module is certified per standard V2.2.4.

	Order code
Further designs	
Please add "**-Z**" to Article No. and specify Order code(s).	
Stainless steel tag [69 x 50 mm (2.71 x 1.97 inch)]: Measuring-point number/identification (max. 27 characters) specify in plain text	**Y15**
Test Certificate: Manufacturer's test certificate M to DIN 55350, Part 18 and to ISO 9000	**C11**
Operating Instructions	
All literature is available to download for free, in a range of languages, at	
http://www.siemens.com/processinstrumentation/documentation	
Optional equipment	Article No.
Tag, stainless steel, 12 x 45 mm, one text line, suitable for enclosures	**7ML1930-1AC**
Sunshield, 304 Stainless steel	**7ML1930-1GA**
USB to RS 232 adapter	**7ML1930-6AK**
RS 232 to RJ11 COMMS adapter	**7ML1830-1MC**
SITRANS RD100, loop powered display - see Chapter 7	**7ML5741-...**
SITRANS RD150, remote digital display for 4 ... 20 mA and HART devices - see Chapter 7	**7ML5742-.....-....**
SITRANS RD200, universal input display with Modbus conversion - see Chapter 7	**7ML5740-...**
SITRANS RD300, dual line display with totalizer and linearization curve and Modbus conversion - see Chapter 7	**7ML5744-...**
SITRANS RD500 web, universal remote monitoring solution for instrumentation - see Chapter 7	**7ML5750-...**
Spare parts	
Power Supply Board (100 ... 230 V AC)	**7ML1830-1MD**
Power Supply Board (12 ... 30 V DC)	**7ML1830-1ME**
Removable terminal blocks	**A5E38824197**
Spare lid with HMI, MultiRanger 200 HMI/HydroRanger 200 HMI, wall	**A5E35778738**
Spare lid with HMI, MultiRanger 200 HMI/HydroRanger 200 HMI, panel	**A5E35778740**
SmartLinx DeviceNet module	**7ML1830-1HT**
SmartLinx PROFIBUS DP V1 module	**A5E35778741**
Smartlinx PROFINET IO module	**7ML1830-1PM**
SmartLinx Modbus TCP/IP, EtherNet/IP module	**7ML1830-1PN**

© Siemens 2020

Dimensional drawings

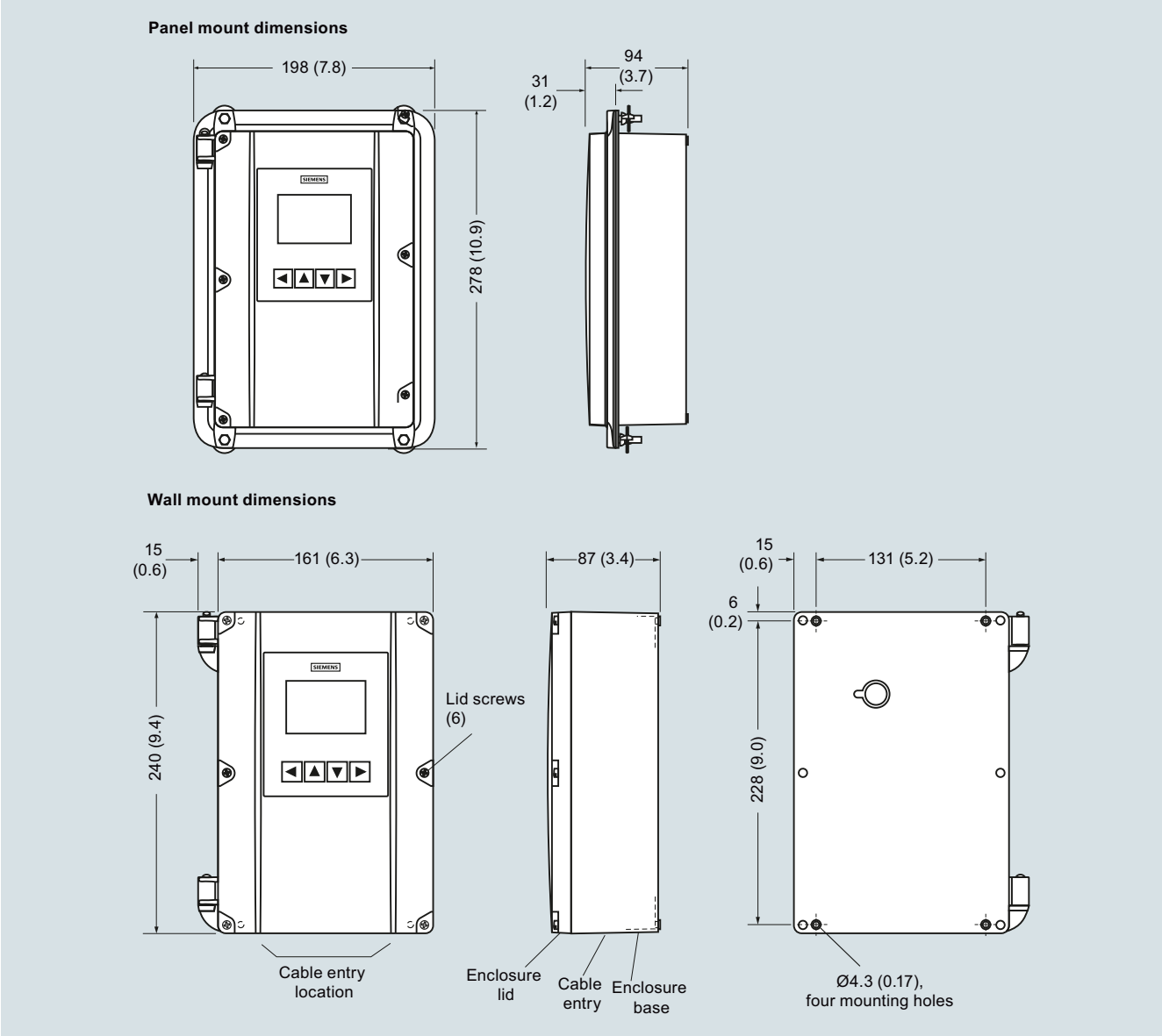

MultiRanger 200 HMI, dimensions in mm (inch)

© Siemens 2020

Circuit diagrams

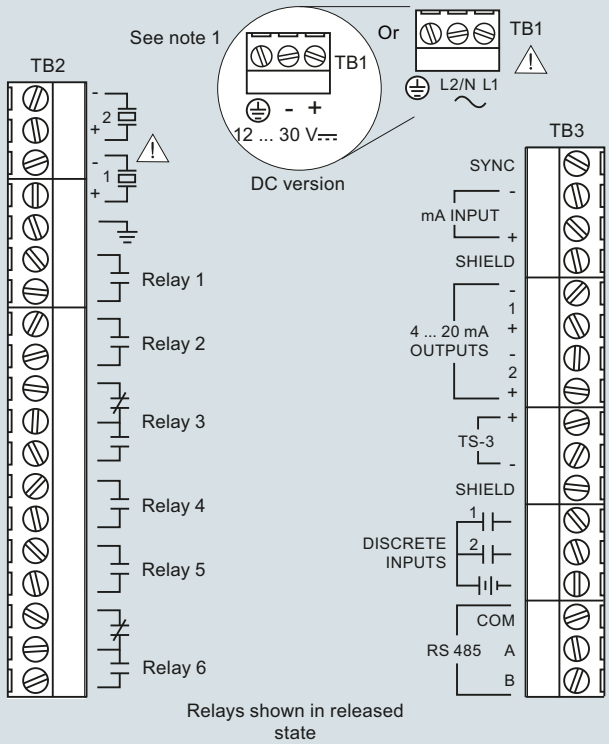

Note:

1. Use 2-core copper wire, twisted, with shield, for expansion up to 365 m (1 200 ft). Route cable in grounded metal conduit, separate from other cables.
2. Verify that all system components are installed in accordance with instructions.
3. Connect all cable shields to the MultiRanger shield connections. Avoid differential ground potentials by not connecting cable shields to ground (earth) anywhere else.
4. Keep exposed conductors on shielded cables as short as possible to reduce noise on the line caused by stray transmissions and noise pickup.

MultiRanger 200 HMI connections

© Siemens 2020

Overview

MultiRanger is a versatile short to medium-range ultrasonic single and multi-vessel level monitor/controller for virtually any application in a wide range of industries.

Benefits

- Digital input for back-up level override from point level device
- Communication using built-in Modbus RTU via RS 485
- Compatible with SmartLinx communication options or SIMATIC PDM via RS 485
- Single or dual point level monitoring
- Auto False-Echo Suppression for fixed obstruction avoidance
- Differential amplifier transceiver for common mode noise reduction and improved signal-to-noise ratio
- MultiRanger 100: level measurements, simple pump control, and level alarm functions
- MultiRanger 200: level, volume, and flow measurements in open channels, differential control, extended pump control, and alarm functions
- Wall and panel mounting options

Application

MultiRanger can be used on different materials, including fuel oil, municipal waste, acids, woodchips, or on materials with high angles of repose. MultiRanger offers true dual point monitoring, digital communications with built-in Modbus RTU via RS 485, as well as compatibility with SIMATIC PDM, allowing PC configuration and setup. MultiRanger features Sonic Intelligence advanced echo-processing software for increased reading reliability.

MultiRanger 100 offers cost-effective level alarming, as well as on/off and alternating pump control. MultiRanger 200 will monitor open channel flow and features more advanced relay alarming and pump control functions as well as volume conversion.

It is compatible with chemical-resistant EchoMax transducers that can be used in hostile environments at temperatures as high as 145 °C (293 °F).

- Key Applications: wet wells, flumes/weirs, bar screen control, hoppers, chemical storage, liquid storage, crusher bins, dry solids storage

Design

The MultiRanger is available in wall or panel mounting options.

© Siemens 2020

Technical specifications

Mode of Operation	
Measuring principle	Ultrasonic level measurement
Measuring range	0.3 ... 15 m (1 ... 50 ft)
Measuring points	1 or 2
Input	
Analog (MultiRanger 200 only)	0 ... 20 mA or 4 ... 20 mA, from alternate device, scalable
Discrete	10 ... 50 V DC switching level Logical 0 ≤ 0.5 V DC Logical 1 = 10 ... 50 V DC Max. 3 mA
Output	
EchoMax transducer	44 kHz
Ultrasonic transducer	Compatible transducers: ST-H and EchoMax series XPS-10, XPS 15/15F, and XRS-5
Relays	Rating 5 A at 250 V AC, non-inductive
• Version with 1 relay (MultiRanger 100 only)	1 SPST Form A
• Version with 3 relays	2 SPST Form A/1 SPDT Form C
• Version with 6 relays	4 SPST Form A/2 SPDT Form C
mA output	0 ... 20 mA or 4 ... 20 mA
• Max. load	750 Ω, isolated
• Resolution	0.1 % of range
Accuracy	
Error in measurement	0.25 % of range or 6 mm (0.24 inch), whichever is greater
Resolution	0.1 % of measuring range[1)] or 2 mm (0.08 inch), whichever is greater
Temperature compensation	• -50 ... +150 °C (-58 ... +302 °F) • Integral temperature sensor • External TS-3 temperature sensor (optional) • Programmable fixed temperature values
Rated operating conditions	
Installation conditions	
• Location	Indoor/outdoor
• Installation category	II
• Pollution degree	4
Ambient conditions	
• Ambient temperature (housing)	-20 ... +50 °C (-4 ... +122 °F)
• Storage temperature	-20 ... +50 °C (-4 ... +122 °F)

Design	
Weight	
• Wall mount	1.37 kg (3.02 lb)
• Panel mount	1.50 kg (3.31 lb)
Material (enclosure)	Polycarbonate
Degree of protection (enclosure)	
• Wall mount	IP65/Type 4X/NEMA 4X
• Panel mount	IP54/Type 3/NEMA 3
Electrical connection	
• Transducer and mA output signal	2-core copper conductor, twisted, shielded, 0.5 ... 0.75 mm² (22 ... 18 AWG), Belden 8760 or equivalent is acceptable
• Max. separation between transducer and transceiver	365 m (1 200 ft)
Displays and controls	100 x 40 mm (4 x 1.5 inch) multi-block LCD with backlighting
Programming	Programming using hand-held programmer, SIMATIC PDM or via PC with Dolphin Plus software
Power supply	
AC version	100 ... 230 V AC ± 15 %, 50/60 Hz, 36 VA (17 W)
DC version	12 ... 30 V DC (20 W)
Certificates and approvals	• CE, RCM, EAC, KCC[2)] • Lloyd's Register of Shipping • ABS Type Approval • FM, $CSA_{US/C}$, UL listed • CSA Class I, Div. 2, Groups A, B, C, and D, Class II, Div. 2, Groups F and G, Class III (wall mount only), ATEX II 3D, EAC Ex
Communication	• RS 232 with Modbus RTU or ASCII via RJ-11 connector • RS 485 with Modbus RTU or ASCII via terminal strips • Optional: SmartLinx cards for - PROFIBUS DP - DeviceNet

1) Program range is defined as the empty distance to the face of the transducer plus any range extension

2) EMC performance available on request

© Siemens 2020

Selection and ordering data

	Article No.
MultiRanger 200 Ultrasonic level controller ↗	**7ML5033-**
Continuous, non-contact, 15 m (50 ft) range. Monitors level, volume, and open channel flow in liquids, slurries, and solids.	■ ■ ■ ■ ■ - ■ ■
↗ Click on the Article No. for the online configuration in the PIA Life Cycle Portal.	
Versions	
MultiRanger 100, level measurement only	**1**
MultiRanger 200, level, volume, flow, and differential measurements	**2**
Mounting, enclosure design	
Wall mount, standard enclosure	**A**
Wall mount, 4 entries, 4 M20 cable glands included	**B**
Panel mount (CE, $CSA_{US/C}$, FM, UL)	**C**
Power supply	
100 ... 230 V AC	**A**
12 ... 30 V DC	**B**
Number of measurement points	
Single point version	**0**
Dual point version	**1**
Communication (SmartLinx)	
Without module	**0**
SmartLinx PROFIBUS DP module	**2**
SmartLinx DeviceNet module See SmartLinx product on page 4/348 for more information.	**3**
Output relays	
3 relays (2 Form A, 1 Form C), 250 V AC	**1**
6 relays (4 Form A, 2 Form C), 250 V AC	**2**
1 relay (1 Form A), 250 V AC (available on MultiRanger 100 model only)	**3**
Approvals	
General Purpose CE, FM, $CSA_{US/C}$, UL listed, RCM, EAC, KCC	**A**
CSA Class I, Div. 2, Groups A, B, C, and D; Class II, Div. 2, Groups F and G; Class III[1]	**B**
ATEX II 3D, EAC Ex[2]	**C**

[1] For wall mount applications only.

[2] For standard enclosure wall mount, option A only.

	Order code
Further designs	
Please add "**-Z**" to Article No. and specify Order code(s).	
Stainless steel tag [69 x 50 mm (2.71 x 1.97 inch)]: Measuring-point number/identification (max. 27 characters) specify in plain text	**Y15**
Operating Instructions	
All literature is available to download for free, in a range of languages, at	
http://www.siemens.com/processinstrumentation/documentation	
Accessories	Article No.
Handheld programmer	**A5E36563512**
Tag, stainless steel, 12 x 45 mm (0.47 x 1.77 inch), one text line, suitable for enclosure	**7ML1930-1AC**
M20 cable gland kit (4 M20 cable glands, 4 M20 nuts, 4 washers)	**7ML1930-1FV**
Sunshield kit, 304 stainless steel	**7ML1930-1GA**
USB to RS 232 adapter	**7ML1930-6AK**
SITRANS RD100, loop powered display - see Chapter 7	**7ML5741-...**
SITRANS RD150, remote digital display for 4 ... 20 mA and HART devices - see Chapter 7	**7ML5742-.....-....**
SITRANS RD200, universal input display with Modbus conversion - see Chapter 7	**7ML5740-...**
SITRANS RD300, dual line display with totalizer and linearization curve and Modbus conversion - see Chapter 7	**7ML5744-...**
SITRANS RD500 web, universal remote monitoring solution for instrumentation - see Chapter 7	**7ML5750-...**
Spare parts	
Power Supply Board (100 ... 230 V AC)	**7ML1830-1MD**
Power Supply Board (12 ... 30 V DC)	**7ML1830-1ME**
MultiRanger 100/200/ HydroRanger 200 display, non-HMI	**7ML1830-1MF**
Removable terminal blocks	**A5E38824197**

© Siemens 2020

Dimensional drawings

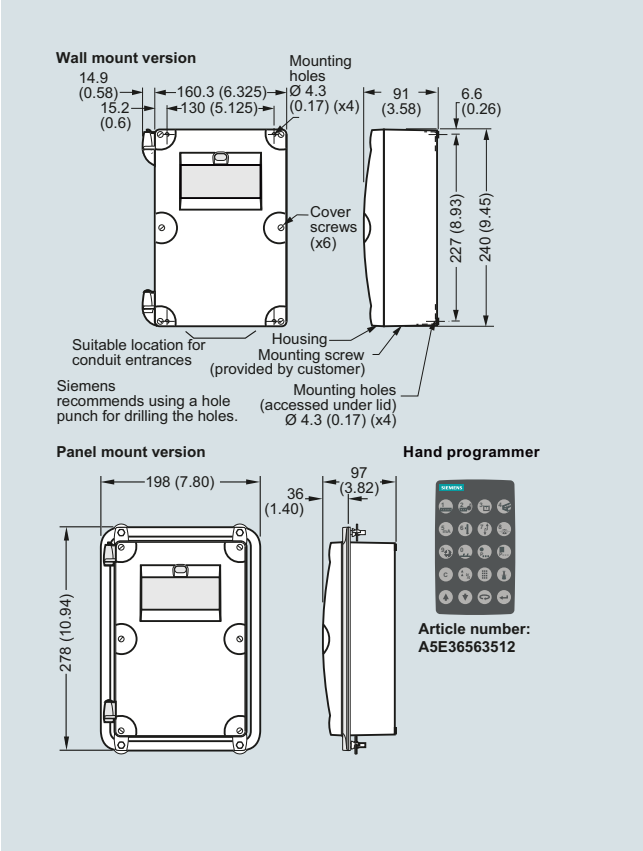

MultiRanger 100/200, dimensions in mm (inch)

Circuit diagrams

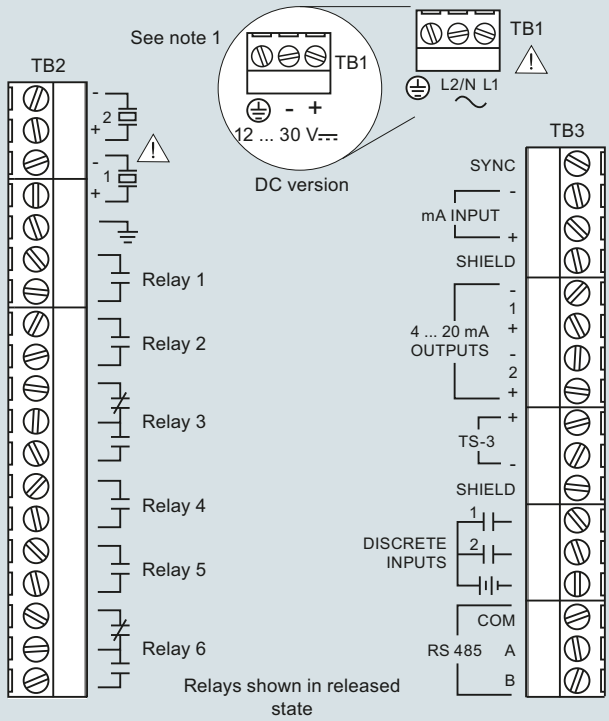

Note:

1. Use 2-core copper wire, twisted, with shield, for expansion up to 365 m (1 200 ft). Route cable in grounded metal conduit, separate from other cables.
2. Verify that all system components are installed in accordance with instructions.
3. Connect all cable shields to the MultiRanger shield connections. Avoid differential ground potentials by not connecting cable shields to ground (earth) anywhere else.
4. Keep exposed conductors on shielded cables as short as possible to reduce noise on the line caused by stray transmissions and noise pickup.

MultiRanger 100/200 connections

© Siemens 2020

Overview

HydroRanger 200 HMI is an ultrasonic level controller for up to six pumps and provides control, differential control, and open channel flow monitoring.

Benefits

- Easy to use HMI display with local four-button programming, menu-driven parameters, and Wizard support for key applications
- English, German, French, Spanish, Chinese, Italian, Portuguese, and Russian texts on the HMI
- Removable terminal blocks for ease of wiring
- Monitors wet wells, weirs, and flumes
- Communication using built-in Modbus RTU via RS 485 and SIMATIC PDM configuration software
- Compatible with SmartLinx system: PROFIBUS DP, PROFINET (cyclic access of process values only), DeviceNet, Modbus TCP/IP, and EtherNet/IP
- Single or dual point level monitoring
- 6 relays
- Auto False-Echo Suppression for fixed obstruction avoidance
- Anti-grease ring/tide mark buildup
- Differential amplifier transceiver for common mode noise rejection and improved signal-to-noise ratio
- Wall and panel mounting options

Application

For water authorities, municipal water, and wastewater plants, HydroRanger 200 HMI is an economical, low-maintenance solution delivering control efficiency and productivity needed to meet today's exacting standards. It offers single point monitoring with all models, and optional dual-point monitoring with 6 relay model. As well, it has digital communications with built-in Modbus RTU via RS 485.

The standard 6 relay HydroRanger 200 HMI will monitor open channel flow and features advanced relay alarming and pump control functions as well as volume conversion. It is compatible with SIMATIC PDM, allowing for PC configuration and set-up. Sonic Intelligence advanced echo-processing software provides increased reading reliability.

HydroRanger 200 HMI uses proven continuous ultrasonic echo ranging technology to monitor water and wastewater of any consistency up to 15 m (50 ft) in depth. Achievable resolution is 0.1 % with accuracy to 0.25 % of range. Unlike contacting devices, HydroRanger 200 HMI is immune to problems caused by suspended solids, harsh corrosives, grease or silt in the effluent, reducing downtime.

- Key Applications: wet wells, flumes/weirs, bar screen control

Technical specifications

Mode of Operation	
Measuring principle	Ultrasonic level measurement
Measuring range	0.3 ... 15 m (1 ... 50 ft), transducer dependent
Measuring points	1 or 2
Input	
Analog	0 ... 20 mA or 4 ... 20 mA, from alternate device, scalable (6 relay model)
Discrete	10 ... 50 V DC switching level Logical 0 ≤ 0.5 V DC Logical 1 = 10 ... 50 V DC max. 3 mA
Output	
EchoMax transducer	44 kHz
Ultrasonic transducer	Compatible transducers: ST-H and EchoMax series XPS-10, XPS-15/15F, and XRS-5
Relays[1)]	Rating 5 A at 250 V AC, non-inductive
• Model with 6 relays	4 SPST Form A/2 SPDT Form
mA output	0 ... 20 mA or 4 ... 20 mA
• Max. load	750 Ω, isolated
• Resolution	0.1 % of range
Accuracy	
Error in measurement	0.25 % of range or 6 mm (0.24 inch), whichever is greater
Resolution	0.1 % of measuring range or 2 mm (0.08 inch), whichever is greater[2)]
Temperature compensation	• -50 ... +150 °C (-58 ... +302 °F) • Integral temperature sensor in transducer • External TS-3 temperature sensor (optional) • Programmable fixed temperature values
Rated operating conditions	
Installation conditions	
• Location	Indoor / outdoor
• Installation category	II
• Pollution degree	4
Ambient conditions	
• Ambient temperature (enclosure)	-20 ... +50 °C (-4 ... +122 °F)
• Storage temperature	-20 ... +50 °C (-4 ... +122 °F)
Design	
Weight	
• Wall mount	1.22 kg (2.68 lb)
• Panel mount	1.35 kg (2.97 lb)
Material (enclosure)	Polycarbonate
Degree of protection (enclosure)	
• Wall mount	IP65/Type 4X/NEMA 4X
• Panel mount	IP54/Type 3/NEMA 3
Cable	
• Transducer and mA output signal	2-core copper conductor, twisted, shielded, 300 Vrms, 0.82 mm² (18 AWG), Belden 8 760 or equivalent is acceptable
• Max. separation between transducer and transceiver	365 m (1 200 ft)
Displays and controls	60 x 40 mm (2.36 x 1.57 inch) LCD 240 x 160 pixels resolution
Power supply[3)]	
AC version	100 ... 230 V AC ± 15 %, 50/60 Hz, 36 VA (17 W)
DC version	12 ... 30 V DC (20 W)

© Siemens 2020

Technical specifications (continued)

Certificates and approvals	• CE, RCM, EAC, KCC[4)] • FM, $CSA_{US/C}$, UL listed • $CSA_{US/C}$ Class I, Div. 2, Groups A, B, C and D, Class II, Div. 2, Groups F and G, Class III (wall mount only) • MCERTS Class 2 approved for Open Channel Flow
Communication	• RS 232 with Modbus RTU or ASCII via RJ-11 connector • RS 485 with Modbus RTU or ASCII via terminal blocks • Optional: SmartLinx cards for - PROFIBUS DPV1, PROFINET (cyclic access of process values only) - DeviceNet, Modbus TCP/IP, EtherNet/IP

1) All relays certified for use with equipment that fails in a state at or under the rated maximums of the relays.

2) Program range is defined as the empty distance to the face of the transducer plus any range extension.

3) Maximum power consumption is listed

4) EMC performance available upon request

Selection and ordering data

	Article No.
HydroRanger 100/200 Ultrasonic level controller ↗	**7ML5034-**
Continuous, non-contact, 15 m (50 ft) range. Monitors level, volume, and open channel flow in liquids, slurries, and solids.	■ ■ ■ ■ ■
↗ Click on the Article No. for the online configuration in the PIA Life Cycle Portal.	
Mounting, enclosure design	
4 button HMI, Wall mount, standard enclosure	**4**
4 button HMI, Wall mount, 4 entries, 4 M20 cable glands included	**5**
4 button HMI, Panel Mount	**6**
Input voltage	
100 ... 230 V AC	**A**
12 ... 30 V DC	**B**
Number of measurement points	
Single point model, 6 relays	**A**
Dual point model, 6 relays	**B**
Communication (SmartLinx)	
Without module	**0**
SmartLinx PROFIBUS DP-V0 module	**2**
SmartLinx DeviceNet module	**3**
SmartLinx PROFIBUS DP-V1 module	**4**
SmartLinx PROFINET module[2)]	**5**
SmartLinx EtherNet/IP module	**6**
SmartLinx Modbus TCP/IP module See SmartLinx product page 4/348 for more information	**7**
Approvals	
General Purpose CE, FM, $CSA_{US/C}$, UL listed, RCM, EAC, KCC	**1**
CSA Class I, Div. 2, Groups A, B, C, and D; Class II, Div. 2, Groups F and G; Class III[1)]	**2**

1) Available with Mounting/Enclosure design options 4 or 5.

2) SmartLinx PROFINET module is certified per standard V2.2.4.

Selection and ordering data

	Order code
Further designs	
Please add "**-Z**" to Article No. and specify Order code(s).	
Stainless steel tag [69 x 50 mm (2.71 x 1.97 inch)]: Measuring-point number/identification (max. 27 characters), specify in plain text	**Y15**
Test Certificate: Manufacturer's test certificate M to DIN 55350, Part 18 and to ISO 9000	**C11**
Operating Instructions	
All literature is available to download for free, in a range of languages, at	

http://www.siemens.com/processinstrumentation/documentation.

Accessories	Article No.
Tag, stainless steel, 12 x 45 mm (0.47 x 1.77 inch), one text line, suitable for enclosure	**7ML1930-1AC**
Sunshield kit, 304 stainless steel	**7ML1930-1GA**
USB to RS 232 adapter	**7ML1930-6AK**
RS 232 to RJ11 COMMS adapter	**7ML1830-1MC**
SITRANS RD100, loop powered display - see Chapter 7	**7ML5741-...**
SITRANS RD150, remote digital display for 4 ... 20 mA and HART devices - see Chapter 7	**7ML5742-.....-....**
SITRANS RD200, universal input display with Modbus conversion - see Chapter 7	**7ML5740-...**
SITRANS RD300, dual line display with totalizer and linearization curve and Modbus conversion - see Chapter 7	**7ML5744-...**
SITRANS RD500 web, universal remote monitoring solution for instrumentation - see Chapter 7	**7ML5750-...**
Spare parts	
Power Supply Board (100 ... 230 V AC)	**7ML1830-1MD**
Power Supply Board (12 ... 30 V DC)	**7ML1830-1ME**
Removable terminal blocks	**A5E38824197**
Spare lid with HMI, MultiRanger 200 HMI/HydroRanger 200 HMI, wall	**A5E35778738**
Spare lid with HMI, MultiRanger 200 HMI/HydroRanger 200 HMI, panel	**A5E35778740**
SmartLinx DeviceNet module	**7ML1830-1HT**
SmartLinx PROFIBUS DP-V1 module	**A5E35778741**
Smartlinx PROFINET IO module	**7ML1830-1PM**
SmartLinx Modbus TCP/IP, EtherNet/IP module	**7ML1830-1PN**

© Siemens 2020

Dimensional drawings

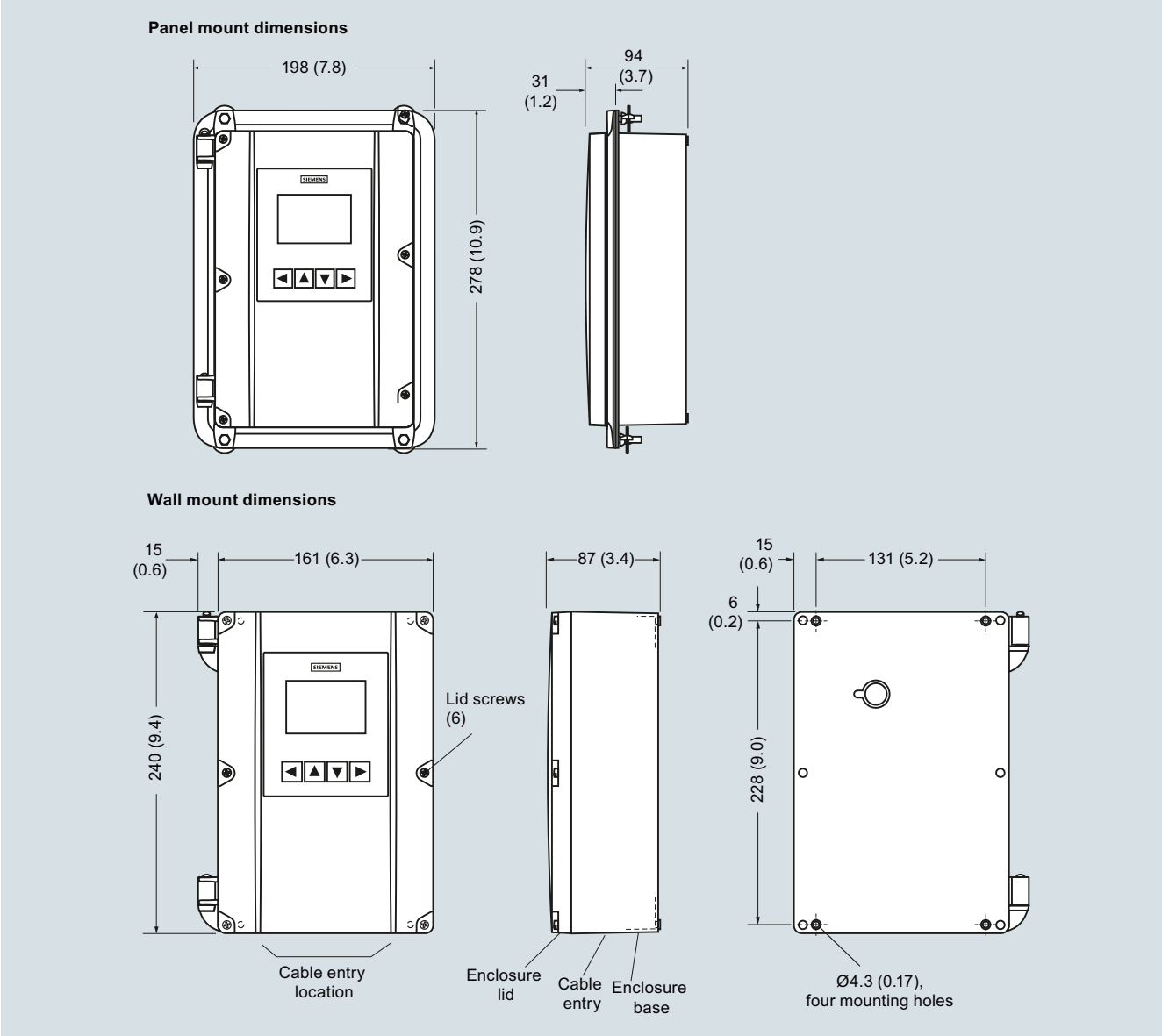

HydroRanger 200 HMI, dimensions in mm (inch)

© Siemens 2020

Circuit diagrams

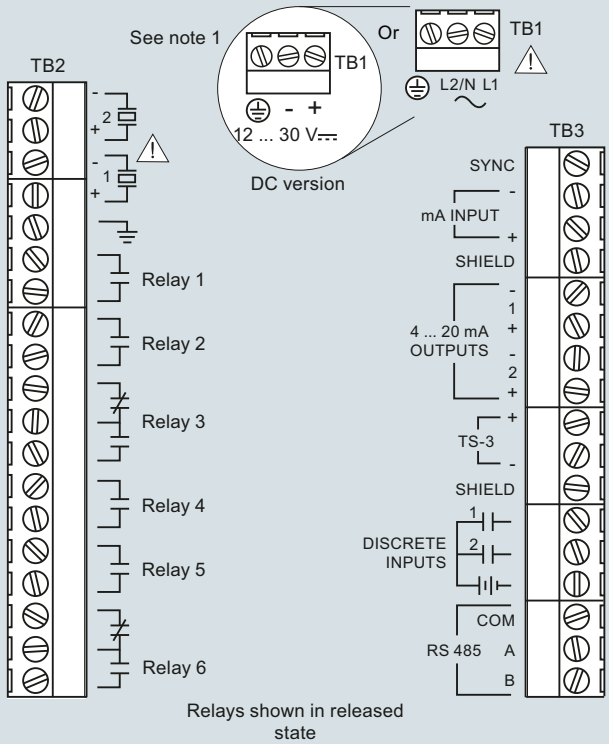

Note:

1. Use 2-core copper wire, twisted, with shield, for expansion up to 365 m (1 200 ft). Route cable in grounded metal conduit, separate from other cables.
2. Verify that all system components are installed in accordance with instructions.
3. Connect all cable shields to the HydroRanger shield connections. Avoid differential ground potentials by not connecting cable shields to ground (earth) anywhere else.
4. Keep exposed conductors on shielded cables as short as possible to reduce noise on the line caused by stray transmissions and noise pickup.

HydroRanger 200 HMI connections

© Siemens 2020

HydroRanger 200

Overview

HydroRanger 200 is an ultrasonic level controller for up to six pumps and provides control, differential control, and open channel flow monitoring.

Benefits

- Monitors wet wells, weirs and flumes
- Digital communications with built-in Modbus RTU via RS 485
- Compatible with SmartLinx communication options or SIMATIC PDM via RS 485
- Single or dual point level monitoring
- 6 relay (standard), 1 or 3 relay (optional)
- Auto False-Echo Suppression for fixed obstruction avoidance
- Anti-grease ring/tide mark buildup
- Differential amplifier transceiver for common mode noise rejection and improved signal-to-noise ratio
- Wall and panel mounting options

Application

For water authorities, municipal water, and wastewater plants, HydroRanger 200 is an economical, low-maintenance solution delivering control efficiency and productivity needed to meet today's exacting standards. It offers single point monitoring with all models, and optional dual-point monitoring with 6 relay model. As well, it has digital communications with built-in Modbus RTU via RS 485.

The standard 6 relay HydroRanger 200 will monitor open channel flow and features more advanced relay alarming and pump control functions as well as volume conversion. It is compatible with SIMATIC PDM, allowing for PC configuration and setup. Sonic Intelligence advanced echo-processing software provides increased reading reliability. The optional 1 or 3 relay models provide accurate level measurement functions only; these two models do not provide open channel flow, differential level measurement or volume conversion functions.

HydroRanger 200 uses proven continuous ultrasonic echo ranging technology to monitor water and wastewater of any consistency up to 15 m (50 ft) in depth. Achievable resolution is 0.1 % with accuracy to 0.25 % of range. Unlike contacting devices, HydroRanger 200 is immune to problems caused by suspended solids, harsh corrosives, grease or silt in the effluent, reducing downtime.

- Key Applications: wet wells, flumes/weirs, bar screen control

© Siemens 2020

Technical specifications

Mode of Operation	
Measuring principle	Ultrasonic level measurement
Measuring range	0.3 ... 15 m (1 ... 50 ft), transducer dependent
Measuring points	1 or 2
Input	
Analog	0 ... 20 mA or 4 ... 20 mA, from alternate device, scalable (6 relay model)
Discrete	10 ... 50 V DC switching level Logical 0 ≤ 0.5 V DC Logical 1 = 10 ... 50 V DC Max. 3 mA
Output	
EchoMax transducer	44 kHz
Ultrasonic transducer	Compatible transducers: ST-H and EchoMax series XPS-10, XPS 15/15F, and XRS-5
Relays[1]	Rating 5 A at 250 V AC, non-inductive
• Model with 1 relay[2]	1 SPST Form A
• Model with 3 relays[2]	2 SPST Form A/1 SPDT Form C
• Model with 6 relays	4 SPST Form A/2 SPDT Form C
mA output	0 ... 20 mA or 4 ... 20 mA
• Max. load	750 Ω, isolated
• Resolution	0.1 % of range
Accuracy	
Error in measurement	0.25 % of range or 6 mm (0.24 inch), whichever is greater
Resolution	0.1 % of measuring range or 2 mm (0.08 inch), whichever is greater[3]
Temperature compensation	• -50 ... +150 °C (-58 ... +302 °F) • Integral temperature sensor in transducer • External TS-3 temperature sensor (optional) • Programmable fixed temperature values
Rated operating conditions	
Installation conditions	
• Location	Indoor / outdoor
• Installation category	II
• Pollution degree	4
Ambient conditions	
• Ambient temperature (enclosure)	-20 ... +50 °C (-4 ... +122 °F)
• Storage temperature	-20 ... +50 °C (-4 ... +122 °F)

Design	
Weight	
• Wall mount	1.37 kg (3.02 lb)
• Panel mount	1.50 kg (3.31 lb)
Material (enclosure)	Polycarbonate
Degree of protection (enclosure)	
• Wall mount	IP65/Type 4X/NEMA 4X
• Panel mount	IP54/Type 3/NEMA 3
Cable	
• Transducer and mA output signal	2-core copper conductor, twisted, shielded, 300 Vrms, 0.82 mm² (18 AWG), Belden 8 760 or equivalent is acceptable
• Max. separation between transducer and transceiver	365 m (1 200 ft)
Displays and controls	100 x 40 mm (4 x 1.5 inch) multi-block LCD with backlighting
Programming	Programming using handheld programmer or via PC with SIMATIC PDM software
Power supply[4]	
AC version	100 ... 230 V AC ± 15 %, 50/60 Hz, 36 VA (17 W)
DC version	12 ... 30 V DC (20 W)
Certificates and approvals	• CE, RCM, EAC, KCC[5] • Lloyd's Register of Shipping • ABS Type Approval • FM, $CSA_{US/C}$, UL listed • $CSA_{US/C}$ Class I, Div. 2, Groups A, B, C, and D, Class II, Div. 2, Groups F and G, Class III, EAC Ex (wall mount only) • MCERTS Class 3 approved for Open Channel Flow
Communication	• RS 232 with Modbus RTU or ASCII via RJ-11 connector • RS 485 with Modbus RTU or ASCII via terminal blocks • Optional: SmartLinx cards for - PROFIBUS DP - DeviceNet

1) All relays certified for use with equipment that fails in a state at or under the rated maximums of the relays

2) This model is level control only; no open channel flow, differential level or volume conversion functions

3) Program range is defined as the empty distance to the face of the transducer plus any range extension

4) Maximum power consumption is listed

5) EMC performance available upon request

© Siemens 2020

Selection and ordering data

	Article No.
HydroRanger 100/200 Ultrasonic level controller ↗	**7ML5034-**
Continuous, non-contact, 15 m (50 ft) range. Monitors level, volume, and open channel flow in liquids, slurries, and solids.	■ ■ ■ ■ ■
↗ Click on the Article No. for the online configuration in the PIA Life Cycle Portal.	
Mounting	
Wall mount, standard enclosure	**1**
Wall mount, 4 entries, 4 M20 cable glands included	**2**
Panel mount[1]	**3**
Power supply	
100 ... 230 V AC	**A**
12 ... 30 V DC	**B**
Number of measurement points	
Single point model, 6 relays	**A**
Dual point model, 6 relays	**B**
Single point model, level only, 1 relay[2]	**C**
Single point model, level only, 3 relays[2]	**D**
Communication (SmartLinx)	
Without module	**0**
SmartLinx PROFIBUS DP module	**2**
SmartLinx DeviceNet module See SmartLinx product on page 4/348 for more information.	**3**
Approvals	
General Purpose CE, FM, $CSA_{US/C}$, UL listed, RCM, EAC, KCC	**1**
CSA Class I, Div. 2, Groups A, B, C, and D; Class II, Div. 2, Groups F and G; Class III, EAC Ex (for wall mount applications only)	**2**

[1] Available with approval option 1 only.

[2] This model is level control only; no open channel flow, differential level, or volume conversion functions.

	Order code
Further designs	
Please add "**-Z**" to Article No. and specify Order code(s).	
Stainless steel tag [69 x 50 mm (2.71 x 1.97 inch)]: Measuring-point number/identification (max. 27 characters) specify in plain text	**Y15**
Operating Instructions	
All literature is available to download for free, in a range of languages, at	
http://www.siemens.com/processinstrumentation/documentation	
Accessories	Article No.
Handheld programmer	**A5E36563512**
Tag, stainless steel, 12 x 45 mm (0.47 x 1.77 inch), one text line, suitable for enclosure	**7ML1930-1AC**
Sunshield kit, 304 stainless steel	**7ML1930-1GA**
USB to RS 232 adapter	**7ML1930-6AK**
SITRANS RD100, loop powered display - see Chapter 7	**7ML5741-...**
SITRANS RD150, remote digital display for 4 ... 20 mA and HART devices - see Chapter 7	**7ML5742-.....-....**
SITRANS RD200, universal input display with Modbus conversion - see Chapter 7	**7ML5740-...**
SITRANS RD300, dual line display with totalizer and linearization curve and Modbus conversion - see Chapter 7	**7ML5744-...**
SITRANS RD500 web, universal remote monitoring solution for instrumentation - see Chapter 7	**7ML5750-...**
Spare parts	
Power Supply Board (100 ... 230 V AC)	**7ML1830-1MD**
Power Supply Board (12 ... 30 V DC)	**7ML1830-1ME**
MultiRanger 100/200/HydroRanger 200 display, non-HMI	**7ML1830-1MF**
Removable terminal blocks	**A5E38824197**

© Siemens 2020

Dimensional drawings

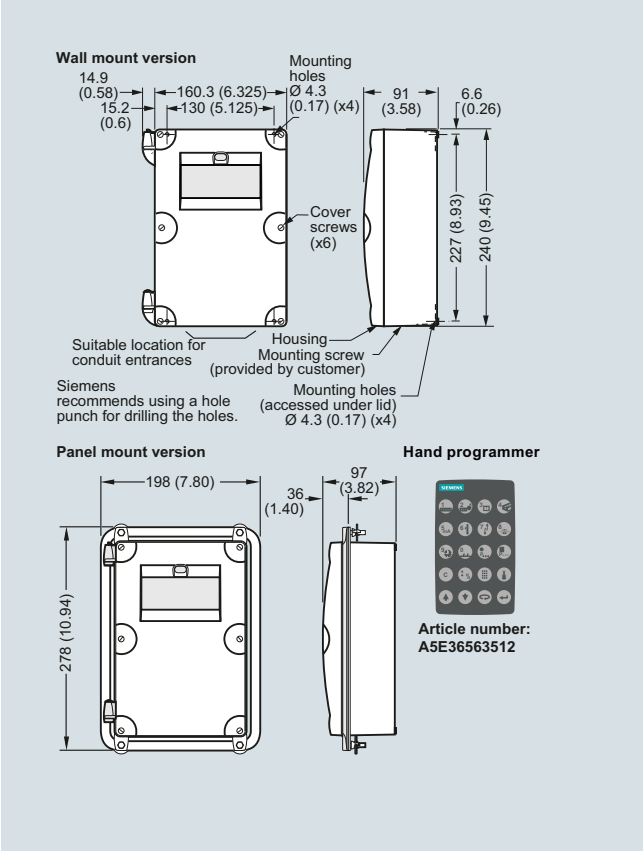

HydroRanger 200, dimensions in mm (inch)

Circuit diagrams

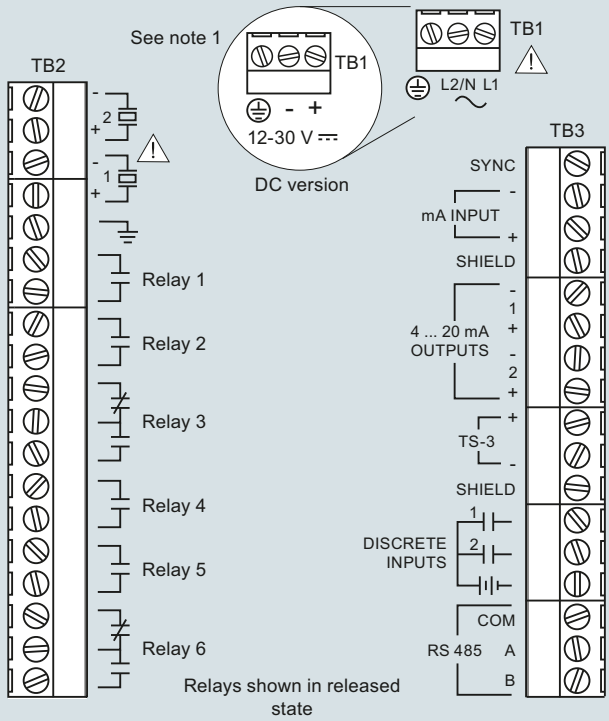

Notes

1. Use 2-core copper wire, twisted, with shield, for expansion up to 365 m (1 200 ft.). Route cable in grounded metal conduit, separate from other cables.
2. Verify that all system components are installed in accordance with instructions.
3. Connect all cable shields to the HydroRanger 200 shield connections. Avoid differential ground potentials by not connecting cable shields to ground (earth) anywhere else.
4. Keep exposed conductors on shielded cables as short as possible to reduce noise on the line caused by stray transmissions and noise pickup.

HydroRanger 200 connections

© Siemens 2020

Overview

Introduction

Ultrasonic measurement is based on the speed of sound. Sound can be used as a measurement tool because there is a measurable time lapse between sound generation and the "hearing" of the sound. This time lapse is then converted into usable information. Ultrasonic sensing equipment generates a sound above 20 000 Hz and then interprets the time lapse of the returned echo. The transducer creates the sound and senses the echo and then a transceiver interprets the sound and converts it into information.

Siemens ultrasonic units include Sonic Intelligence, a signal processing technology. Using unique algorithms, Sonic Intelligence differentiates between true echoes from the material and false echoes from obstructions or electrical noise, providing intelligent processing of echo profiles.

Typical System

Ultrasonic level measurement requires two components: one to generate the sound and catch the echo (transducer) and one to interpret the data and derive a measurement (transceiver). Even though some ultrasonic instruments combine the components in one unit, the individual functionality remains distinct. The measurement output is communicated to the unit, PLCs or PCs for process control.

Principle of Operation

A piezoelectric crystal inside the transducer converts an electrical signal into sound energy, firing a burst into the air which travels to the target and then is reflected back to the transducer. The transducer then acts as a receiving device and converts the sonic energy back into an electrical signal contained in the transceiver. An electronic signal processor analyzes the return echo and calculates the distance between the transducer and the target. The time lapse between firing the sound burst and receiving the return echo is directly proportional to the distance between the transducer and the material in the vessel. This basic principle lies at the heart of the ultrasonic measurement technology and is illustrated in the equation:
Distance = (Velocity of Sound x Time)/2.

Mode of operation

Common Terms

Attenuation

Denotes a decrease in signal magnitude in transmission from one point to another. Attenuation may be expressed as a scalar ratio of the input magnitude to the output magnitude or in decibels.

Beam angle

The diameter of a conical boundary centered around the axis of transmission when the power (radiating perpendicular to the transducer face on the axis of transmission) is reduced by half (-3 dB).

Blanking distance

Specified zone extending downward from the transducer face in which received echoes are ignored by the transceiver. Blanking distance ignores echoes from ringing.

Echo confidence

The recognition of the validity of the echo as material level. A measure of echo reliability.

Ringing

The inherent nature of the transducer to continue vibrating after the transmit pulse has ceased; the decay of the transmit pulse.

Transducer/Transceiver

A transducer provides the initial ultrasonic pulse and receives its echo. An ultrasonic transducer amplifies the sound wave created by the piezoelectric crystal and transmits that sound wave to the face of the transducer while at the same time dampening the sound wave from the other sides of the crystal.

Transceivers analyze the echo from the transducer to determine the required measurement.

© Siemens 2020

Technical specifications

Ultrasonic Transmitter Selection Guide

Criteria	SITRANS Probe LU	SITRANS Probe LU240	SITRANS LU150/LU180
Range	6 m (20 ft) or 12 m (40 ft)	0.2 ... 6 m (8 inch ... 20 ft) 0.2 ... 12 m (8 inch ... 40 ft)	0.25 ... 5 m (0.8 ... 16.4 ft)
Typical applications	Chemical storage vessels, filter beds, liquid storage vessels	Chemical storage vessels, filter beds, liquid storage vessels	Chemical storage vessels, filter beds, mud pits, liquid storage vessels, food applications
Output	HART model: 4 ... 20 mA/HART PROFIBUS PA model: PROFIBUS	4 ... 20 mA/HART	4 ... 20 mA loop powered
Communications	HART or PROFIBUS PA Options: SIMATIC PDM for remote configuration and diagnostics	HART, SIMATIC PDM	N/A
Power specifications	HART: 4 ... 20 mA, 24 V DC nominal, max. 550 Ω, 30 V DC PROFIBUS PA: 12, 13, 15, or 20 mA, dependent on programming	HART: 4 ... 20 mA, 10.5 ... 30 V DC	12 ... 30 V DC, 0.1 A surge, max. 600 Ω in the loop at 24 V DC
Approvals	CE, $CSA_{US/C}$, FM, RCM, ATEX, IECEx	FM, $CSA_{US/C}$, CE, RCM ATEX, IECEx, FM, INMETRO, NEPSI, SABS	CE, $CSA_{US/C}$, FM, ATEX, RCM, NEPSI, IECEx

A5E36563512

MultiRanger 100/200
HydroRanger 200
SITRANS Probe LU HART*
SITRANS LU

7ML5830-2AJ

SITRANS Probe LU PROFIBUS

* **Note:** To order the IS version of this hand programmer, order 7ML5830-2AH.

Handheld programmer selection guide

© Siemens 2020

Overview

SITRANS LU150 is a short-range integrated ultrasonic level transmitter. This general purpose, 2-wire, 4 to 20 mA loop powered transmitter is ideal for liquids, slurries, and bulk materials in open or closed vessels to 5 m (16.4 ft).

Benefits

- Easy to install, program, and maintain
- Accurate and reliable
- Sanitary models available
- Patented Sonic Intelligence echo processing
- Integral temperature compensation

Application

The transducer is available in PVDF copolymer, making the device suitable for use in a wide variety of applications.

SITRANS LU150 is easy to install and maintain, and can be quickly removed for cleaning as required by the food, beverage and pharmaceutical industries.

The reliability of the level data is based on the Sonic Intelligence echo processing algorithms. A filter discriminates between the true echo and false echoes from acoustic or electrical noises and agitator blades in motion. The ultrasonic pulse propagation time to the material and back is temperature-compensated and converted into distance for display, analog output.

- Key Applications: chemical storage vessels, filter beds, mud pits, liquid storage vessels, food applications

Configuration

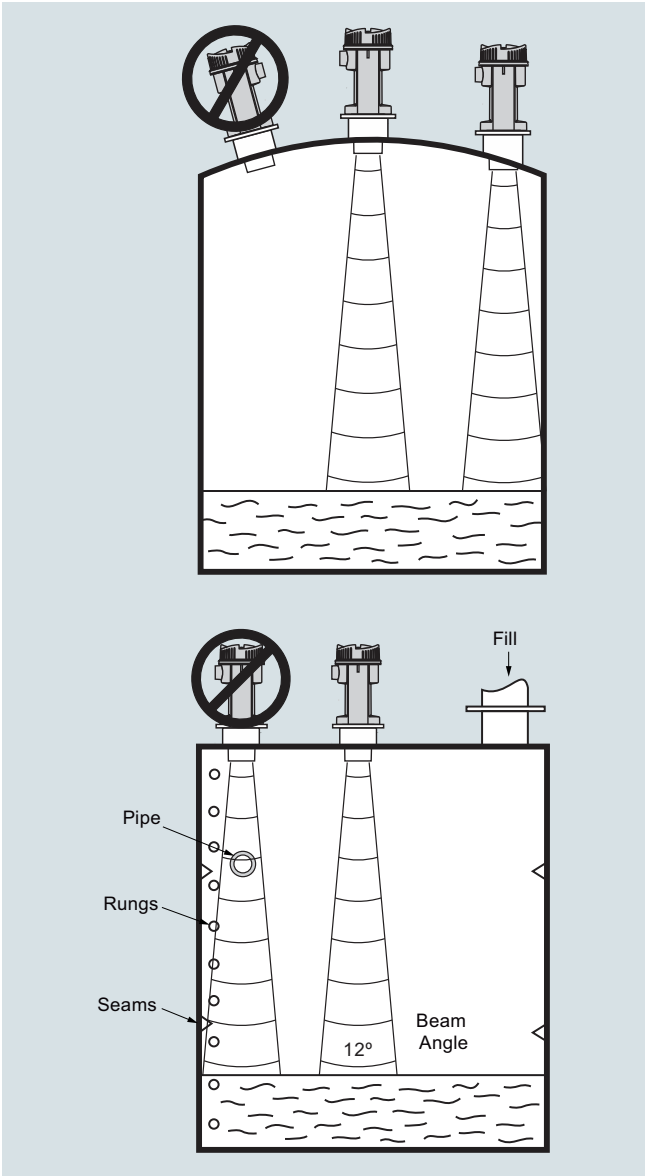

SITRANS LU150 mounting

© Siemens 2020

Technical specifications

Mode of Operation	
Measuring principle	Ultrasonic level measurement
Input	
Measuring range	0.25 ... 5 m (0.8 ... 16.4 ft)
Frequency	54 kHz
Output	
mA	4 ... 20 mA
• Span	Proportional/ inversely proportional
• Max. load	600 Ω in the loop at 24 V DC
Power supply	
Supply voltage	12 ... 30 V DC, 0.1 A surge
Max. power consumption	0.75 W (25 mA at 24 V DC)
Certificates and approvals	CE, $CSA_{US/C}$
Accuracy	
Error in measurement	0.25 % of measuring range (in air)
Resolution	3 mm (0.125 inch)
Temperature compensation	Built in
Echo processing	Sonic Intelligence
Rated operation conditions	
Beam angle	12°
Ambient temperature	
• Standard	-30 ... +60 °C (-22 ... +140 °F)
• Metallic mounting	-20 ... +60 °C (-4 ... +140 °F)
Storage temperature	
• Standard	-30 ... +60 °C (-22 ... +140 °F)
• Metallic mounting	-20 ... +60 °C (-4 ... +140 °F)
Max. static operating pressure	Normal atmospheric pressure
Design	
Weight	1.3 kg (2.9 lb)
Material	
• Electronics enclosure	PBT
• Transducer	PVDF copolymer
Degree of protection	IP68 / NEMA 6 / TYPE 6
Process connection	• 2" NPT [(Taper), ANSI/ASME B1.20.1] • R 2" [(BSPT), EN 10226] • G 2" [(BSPP), EN ISO 228-1] • 4" sanitary
Flange adapter	3" Universal, (fits DN 65, PN 10 and 3" ASME)
Cable inlet	1 inlet for M20, optional 1/2" NPT

Selection and ordering data

	Article No.
SITRANS LU150 Ultrasonic level transmitter ↗	**7ML5201-**
Continuous, non-contact, 5 m (16.4 ft) range. Monitors level in liquids and slurries. Basic level performance.	**0 ■ ■ 0**
↗ Click on the Article No. for the online configuration in the PIA Life Cycle Portal.	
Transducer/Process connection (PVDF)	
PVDF copolymer, 2" NPT [(Taper), ANSI/ASME B1.20.1]	**E**
PVDF copolymer, R 2" [(BSPT), EN 10226]	**F**
PVDF copolymer, G 2" [(BSPP), EN ISO 228-1]	**G**
PVDF copolymer, 4" Sanitary mounting	**J**
Cable inlet	
M20 x 1.5 [General Purpose cable gland -20 ... +60 °C (-4 ... +140 °F) included]	**B**
1/2" NPT stainless steel entry (no cable gland included)	**C**

Further designs	Order code
Please add "**-Z**" to Article No. and specify Order code(s).	
Stainless steel tag [13 x 45 mm (0.5 x 1.75 inch)]: Measuring-point number/identification (max. 20 characters) specify in plain text	**Y15**
Test certificate: Manufacturer's test certificate M to DIN 55350, Part 18 and to ISO 9000	**C11**

Operating Instructions

All literature is available to download for free, in a range of languages, at

http://www.siemens.com/processinstrumentation/documentation

Accessories	Article No.
Tag, stainless steel, 12 x 45 mm (0.47 x 1.77 inch), one text line	**7ML1930-1AC**
Universal Box Bracket Mounting kit	**7ML1830-1BK**
Sanitary 4" mounting clamp	**7ML1830-1BR**
3" ASME, DN 65 PN 10, JIS 10K 3B ETFE Flange adapter for 2" NPT	**7ML1830-1BT**
3" ASME, DN 65 PN 10, JIS 10K 3B ETFE Flange adapter for 2" BSPT	**7ML1830-1BU**
2" BSP nylon plastic locknut	**7ML1830-1DQ**
2" NPT nylon plastic locknut	**7ML1830-1DT**
Cable Gland - General Purpose -20 ... +60 °C (-4 ... +140 °F)	**A5E34457564**

© Siemens 2020

Options

SITRANS LU150, Flange Adapter

The SITRANS LU150 can be fitted with the optional 75 (3) flange adapter for mating to 3" ANSI, DIN 65 PN10 and JIS 10K3B flanges.

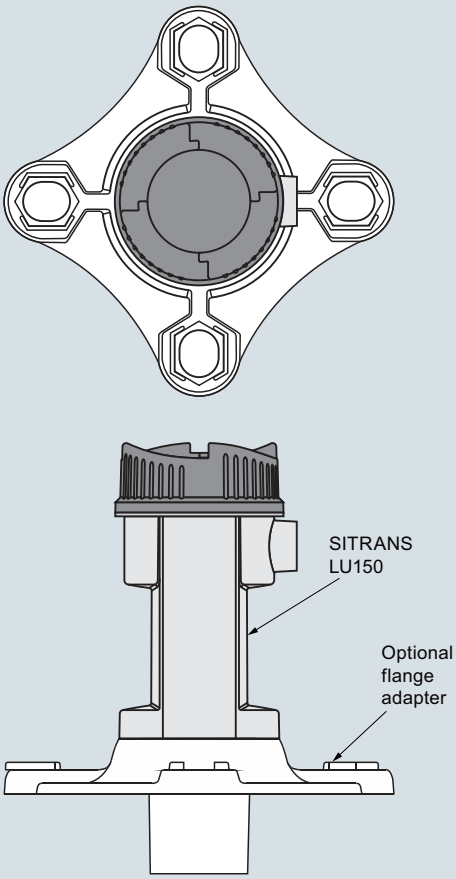

SITRANS LU150 optional flange adapter, dimensions in mm (inch)

© Siemens 2020

Dimensional drawings

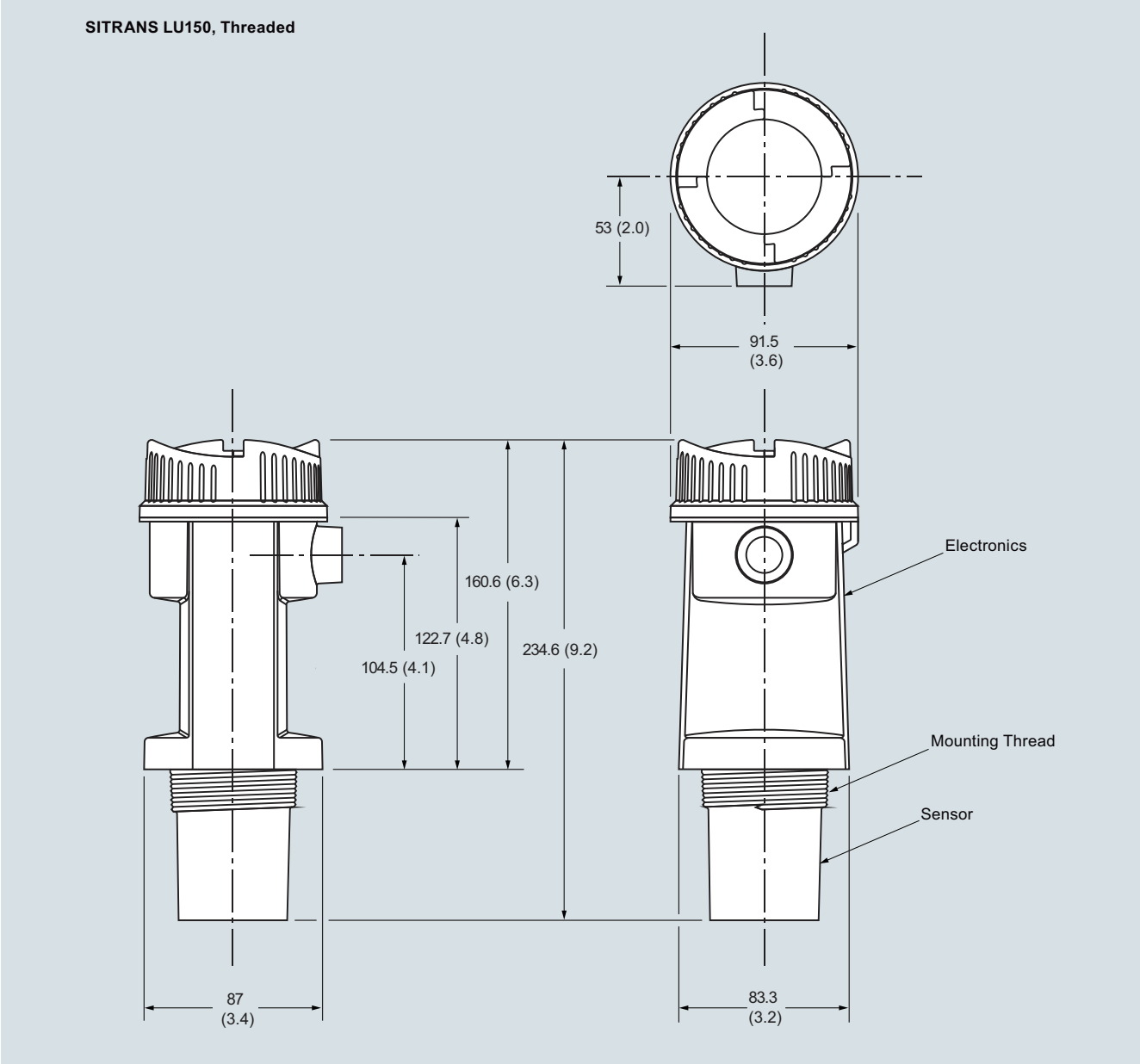

SITRANS LU150, dimensions in mm (inch)

© Siemens 2020

Dimensional drawings (continued)

SITRANS LU150, Sanitary

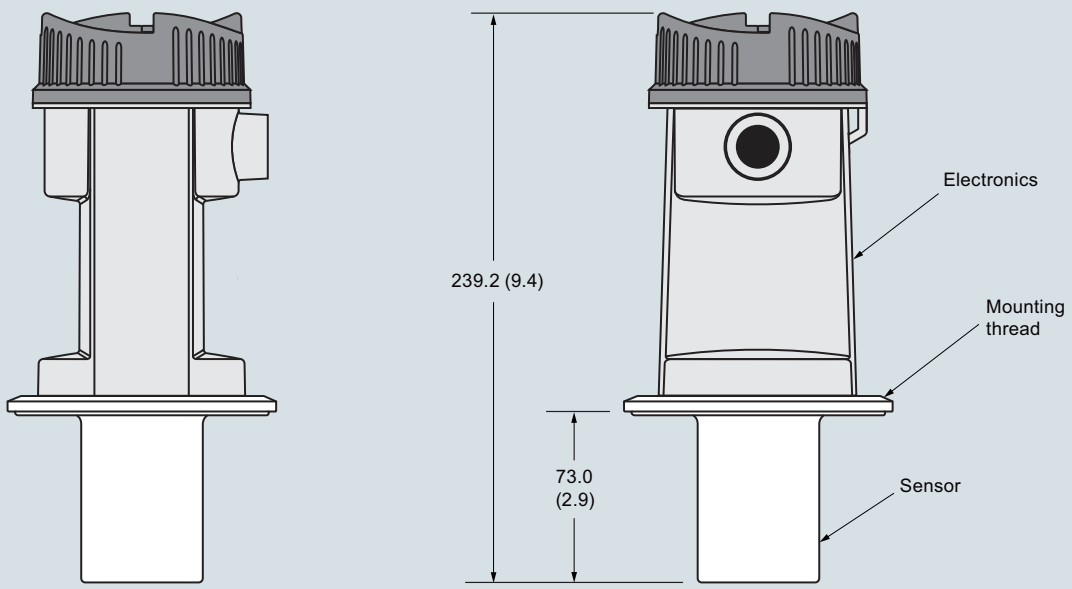

SITRANS LU150, dimensions in mm (inch)

Circuit diagrams

Threaded and Sanitary models

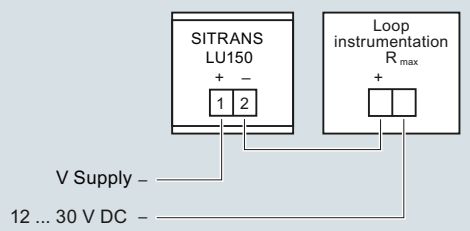

Display

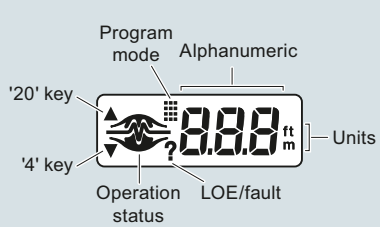

SITRANS LU150 connections

© Siemens 2020

Overview

SITRANS LU180 is a short-range integrated ultrasonic level transmitter. It is intrinsically safe (ATEX, CSA, FM, IECEx, NEPSI), 2 wire, 4 to 20 mA loop powered, ideal for liquids, slurries, and bulk materials in open or closed vessels to 5 meters (16.4 feet).

Benefits

- Easy to install, program, and maintain
- Accurate and reliable
- Sanitary models available
- Patented Sonic Intelligence echo processing
- Integral temperature compensation

Application

The transducer is available in PVDF copolymer, making the device suitable for use in a wide variety of applications.
SITRANS LU180 is easy to install and maintain, and can be quickly removed for cleaning as required by the food, beverage and pharmaceutical industries. The reliability of the level data is based on the Sonic Intelligence echo processing algorithms. A filter discriminates between the true echo and false echoes from acoustic or electrical noises and agitator blades in motion. The ultrasonic pulse propagation time to the material and back is temperature compensated and converted into distance for display, analog output.

- Key Applications: chemical storage vessels, filter beds, mud pits, liquid storage vessels, food applications

Configuration

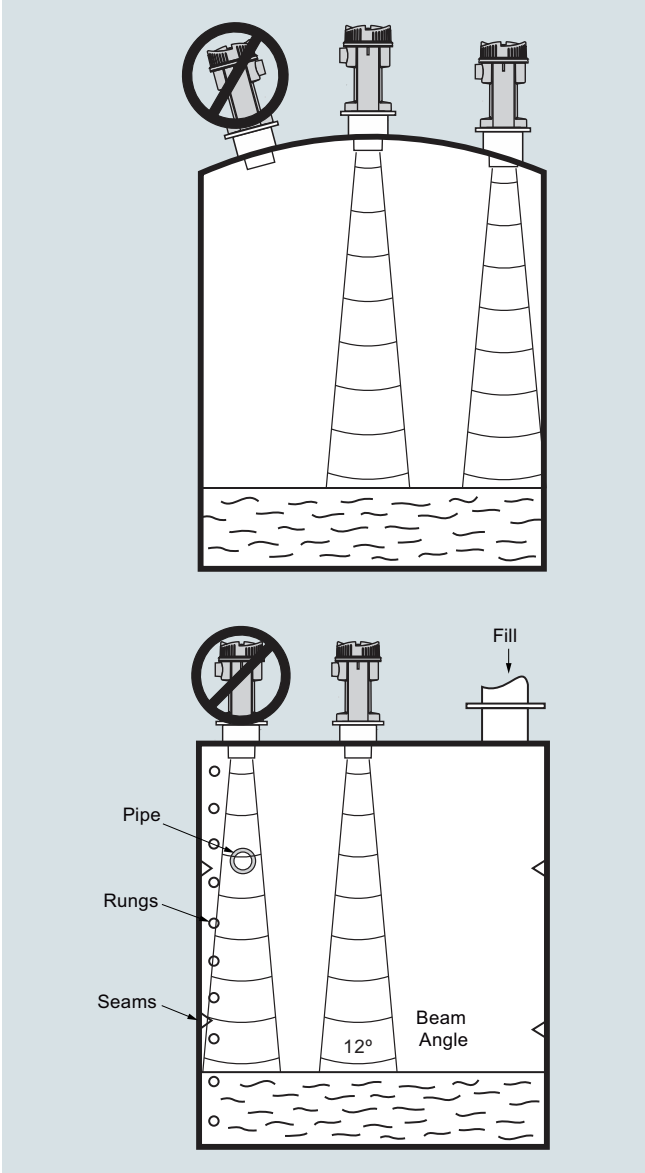

SITRANS LU180 mounting

© Siemens 2020

Technical specifications

Mode of operation	
Measuring principle	Ultrasonic level measurement
Input	
Measuring range	0.25 ... 5 m (0.8 ... 16.4 ft)
Frequency	54 kHz
Output	
mA	4 ... 20 mA
• Span	Proportional/ inversely proportional
• Max. load	600 Ω in the loop at 24 V DC
Power supply	
Supply voltage	12 ... 30 V DC, 0.1 A surge
Max. power consumption	0.75 W (25 mA at 24 V DC)
Certificates and approvals	CSA: IS/ Class I, II, III, Div. 1, Groups: A, B, C, D, E, F, G T4 FM: IS/ Class I, II, III, Div. 1, Groups: A, B, C, D, E, F, G T4 ATEX: II 1G Ex ia IIC T4 Ga IECEx Ex ia IIC T4 Ga NEPSI Ex ia IIC T4 Ga
Accuracy	
Error in measurement	0.25 % of measuring range (in air)
Resolution	3 mm (0.125 inch)
Temperature compensation	Built in
Echo processing	Sonic Intelligence
Rated operation conditions	
Beam angle	12°
Ambient temperature	
• Standard	-40 ... +60 °C (-40 ... +140 °F)
• Metallic mounting	-20 ... +60 °C (-4 ... +140 °F)
Storage temperature	
• Standard	-40 ... +60 °C (-40 ... +140 °F)
• Metallic mounting	-20 ... +60 °C (-4 ... +140 °F)
Max. static operating pressure	Normal atmospheric pressure
Design	
Weight	1.3 kg (2.9 lb)
Material	
• Electronics enclosure	PBT
• Transducer	PVDF copolymer
Degree of protection	IP68 / NEMA 6 / TYPE 6
Process connection	• 2" NPT [(Taper), ANSI/ASME B1.20.1] • R 2" [(BSPT), EN 10226] • G 2" [(BSPP), EN ISO 228-1] • 4" sanitary
Flange adapter	3" Universal (fits DN 65, PN 10 and 3" ASME)
Cable inlet	1 inlet for M20, optional 1/2" NPT

Selection and ordering data

	Article No.
SITRANS LU180 Ultrasonic level transmitter ↗ Continuous, non-contact, 5 m (16.4 ft) range. Monitors level in liquids and slurries. Basic level performance for intrinsically safe applications. ↗ Click on the Article No. for the online configuration in the PIA Life Cycle Portal.	**7ML5202-** **0 ■ ■ 0**
Transducer/Process connection	
PVDF copolymer, 2" NPT [(Taper), ANSI/ASME B1.20.1]	**E**
PVDF copolymer, R 2" [(BSPT), EN 10226]	**F**
PVDF copolymer, G 2" [(BSPP), EN ISO 228-1]	**G**
PVDF copolymer, 4" Sanitary mounting	**J**
Cable inlet	
M20 x 1.5 [General Purpose cable gland -20 ... +60 °C (-4 ... +140 °F) included]	**B**
1/2" NPT stainless steel entry (no cable gland included)	**C**

Further designs	Order code
Please add "**-Z**" to Article No. and specify Order code(s).	
Stainless steel tag [13 x 45 mm (0.5 x 1.75 inch)]: Measuring-point number/identification (max. 20 characters) specify in plain text	**Y15**
Test certificate: Manufacturer's test certificate M to DIN 55350, Part 18 and to ISO 9000	**C11**

Operating Instructions

All literature is available to download for free, in a range of languages, at

http://www.siemens.com/processinstrumentation/documentation.

Accessories	Article No.
Tag, stainless steel, 12 x 45 mm (0.47 x 1.77 inch), one text line	**7ML1930-1AC**
Universal box bracket mounting kit	**7ML1830-1BK**
Sanitary 4" mounting clamp	**7ML1830-1BR**
3" ASME, DN 65 PN 10, JIS 10K 3B ETFE Flange adapter for 2" NPT	**7ML1830-1BT**
3" ASME, DN 65 PN 10, JIS 10K 3B ETFE Flange adapter for 2" BSPT	**7ML1830-1BU**
2" BSP nylon plastic locknut	**7ML1830-1DQ**
2" NPT nylon plastic locknut	**7ML1830-1DT**
Cable Gland, General Purpose -20 ... +60 °C (-4 ... +140 °F)	**A5E34457564**

© Siemens 2020

Options

SITRANS LU180, Flange Adapter

The SITRANS LU180 can be fitted with the optional 75 (3) flange adapter for mating to 3" ANSI, DIN 65 PN10 and JIS 10K3B flanges.

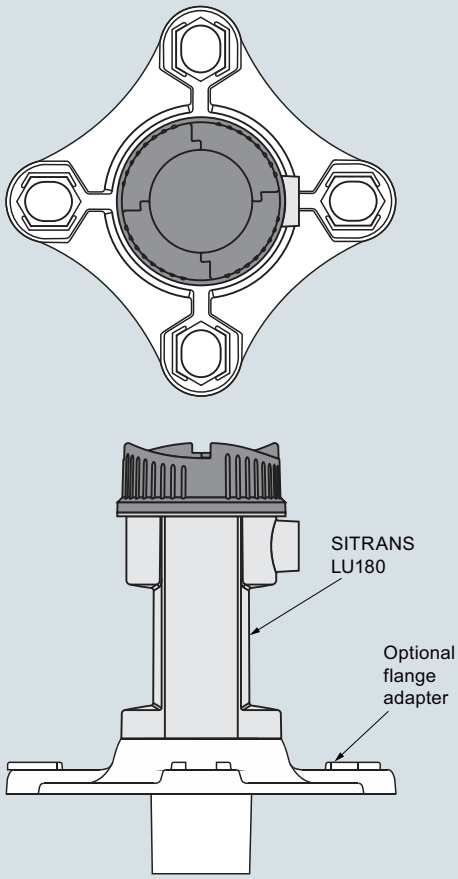

SITRANS LU180 optional flange adapter, dimensions in mm (inch)

© Siemens 2020

Dimensional drawings

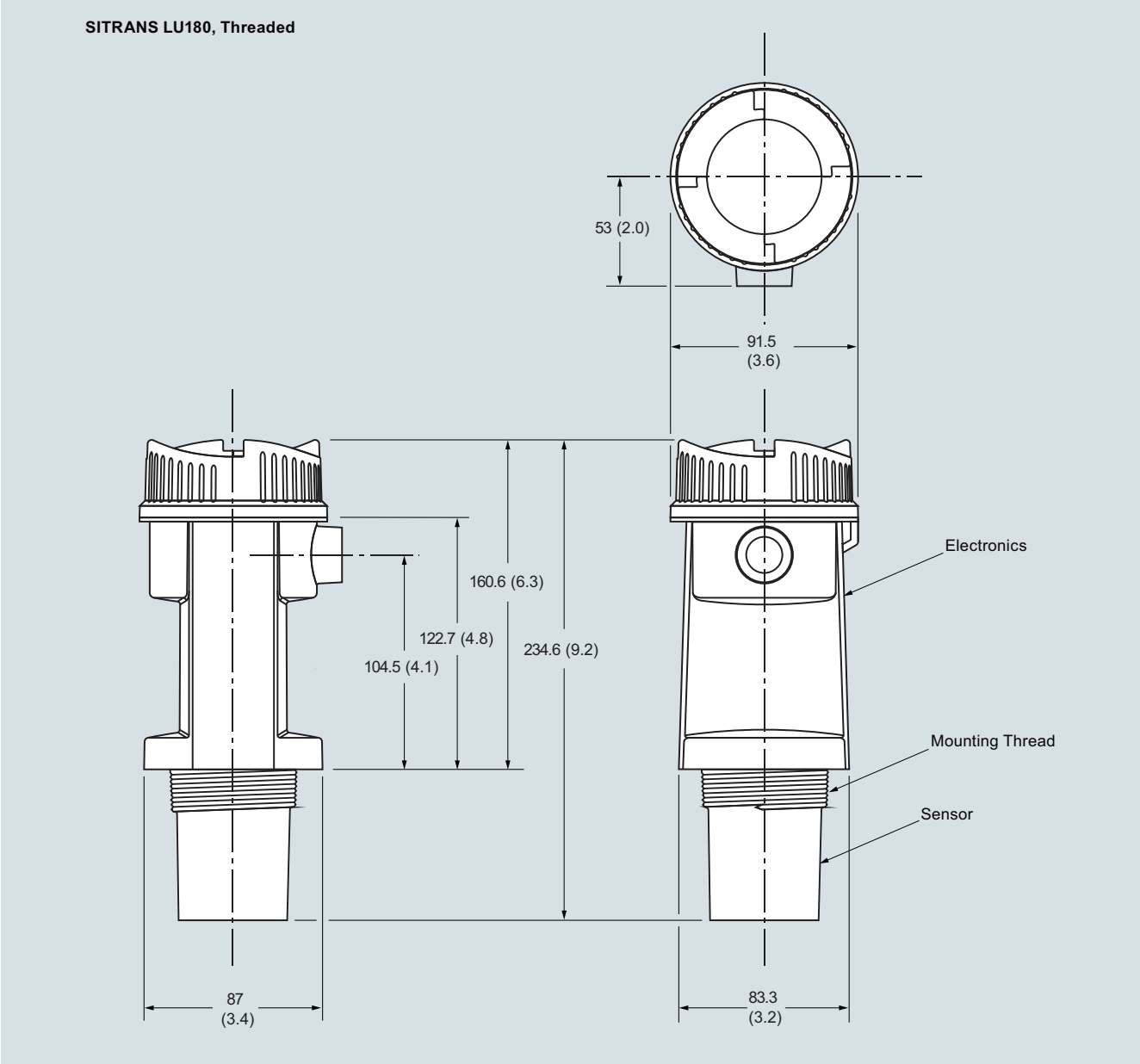

SITRANS LU180, dimensions in mm (inch)

© Siemens 2020

Dimensional drawings (continued)

SITRANS LU180, Sanitary

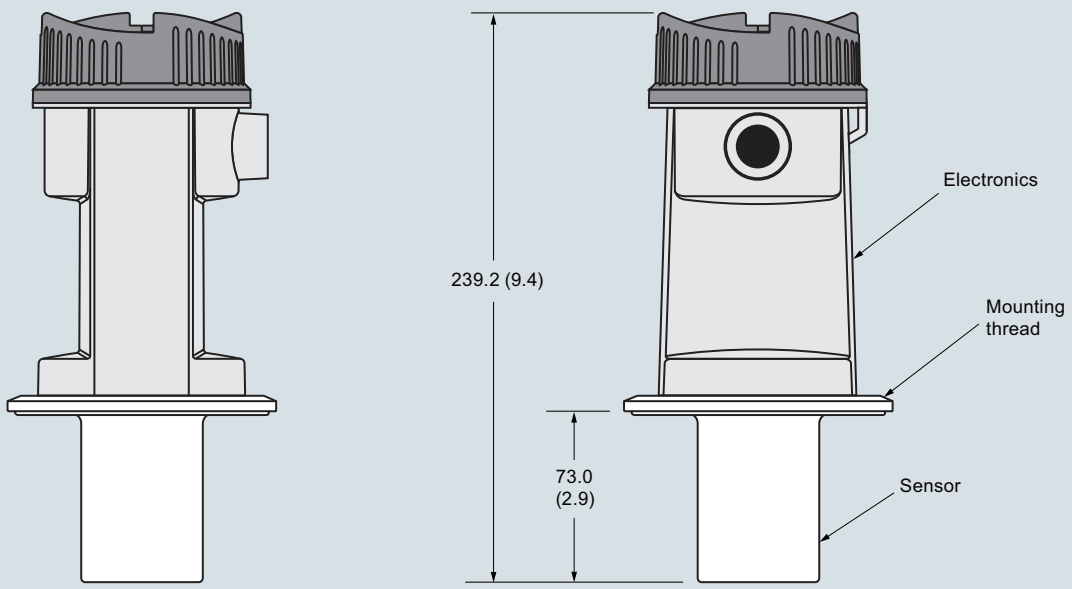

SITRANS LU180, dimensions in mm (inch)

Circuit diagrams

SITRANS LU180, Threaded and sanitary models

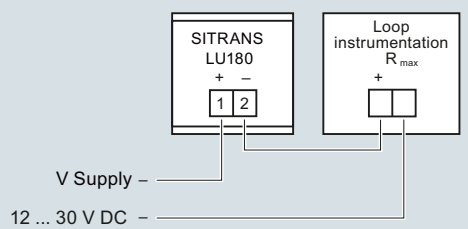

Display

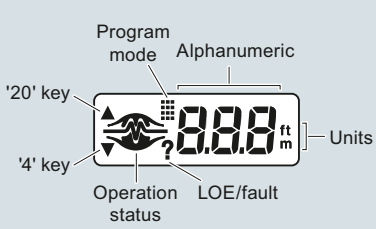

SITRANS LU180 connections

© Siemens 2020

Overview

SITRANS Probe LU is a 2-wire loop powered ultrasonic transmitter for level, volume and flow monitoring of liquids in open channels, storage vessels, and simple process vessels.

Benefits

- Continuous level measurement up to 12 m (40 ft) range
- Easy installation and simple startup
- Programming using infrared Intrinsically Safe handheld programmer, SIMATIC PDM or HART Communicator
- Communication using HART or PROFIBUS PA
- ETFE or PVDF transducers for chemical compatibility
- Sonic Intelligence signal processing
- Auto False-Echo Suppression for fixed obstruction avoidance
- Level to volume or level to flow conversion

Application

The SITRANS Probe LU is ideal for level monitoring in the water and wastewater industry, chemical storage vessels, and small bulk hoppers.

The range of SITRANS Probe LU is 6 or 12 m (20 or 40 ft). Using Sonic Intelligence, Auto False Echo Suppression for fixed obstruction avoidance, and accuracy of 0.15 % of range or 6 mm (0.25 inch), the Probe LU provides unmatched reliability.

The Probe LU offers two communications options: HART or PROFIBUS PA (Profile version 3.0, Class B).

The transducer on the Probe LU is available as ETFE or PVDF to suit the chemical conditions of your application. As well, for applications with varying material and process temperatures, the Probe LU incorporates an internal temperature sensor to compensate for temperature changes.

- Key Applications: chemical storage vessels, filter beds, liquid storage vessels

Configuration

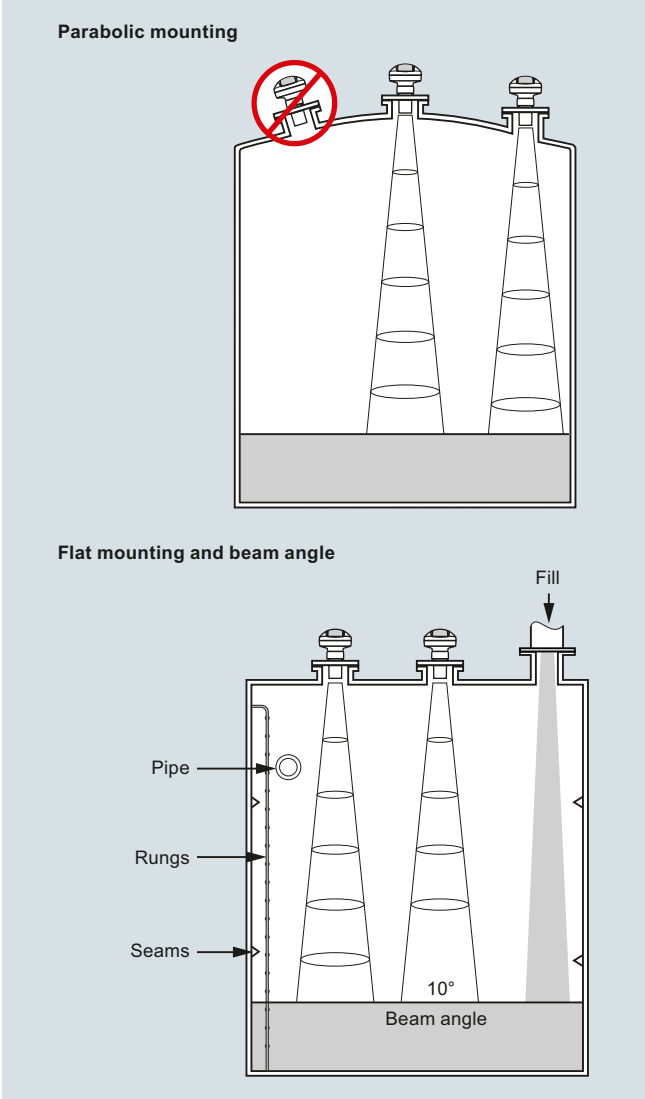

SITRANS Probe LU mounting

© Siemens 2020

Technical specifications

Mode of operation	
Measuring principle	Ultrasonic level measurement
Typical application	Level measurement in storage vessels and simple process vessels
Inputs	
Measuring range	
• 6 m (20 ft) model	0.25 ... 6 m (10 inch ... 20 ft)
• 12 m (40 ft) model	0.25 ... 12 m (10 inch ... 40 ft)
Frequency	54 kHz
Outputs	
mA/HART	
• Range	4 ... 20 mA
• Accuracy	± 0.02 mA
PROFIBUS PA	Profile 3, Class B
Performance	
Resolution	≤ 3 mm (0.12 inch)
Accuracy	± the greater of 0.15 % of range or 6 mm (0.24 inch)
Repeatability	≤ 3 mm (0.12 inch)
Blanking distance	0.25 m (10 inch)
Update time	≤ 5 s
• 4/20 mA/HART version	≤ 5 s at 4 mA
• PROFIBUS version	≤ 4 s at 15 mA current loop
Temperature compensation	Built-in to compensate over temperature range
Beam angle	10°
Rated operating conditions	
Ambient conditions	
• Location	Indoor/outdoor
• Ambient temperature	-40 ... +80 °C (-40 ... +176 °F)
• Storage temperature	-40 ... +80 °C (-40 ... +176 °F)
• Relative humidity/ingress protection	Suitable for outdoor
• Installation category	I
• Pollution degree	4
Medium conditions	
• Temperature at flange or threads	-40 ... +85 °C (-40 ... +185 °F)
• Pressure (vessel)	0.5 bar g (7.25 psi g)
Design	
Material (enclosure)	PBT (Polybutylene Terephthalate)
Degree of protection	Type 4X/NEMA 4X, Type 6/NEMA 6/IP67/IP68 enclosure
Weight	2.1 kg (4.6 lb)
Cable inlet	2 x M20 x 1.5 cable gland or 2 x ½" NPT thread or 1 x M20 x 1.5 and 1 x ½" NPT
Material (transducer)	Buna-N seal with ETFE (Ethylene Tetrafluoroethylene) or PVDF (Polyvinylidene Fluoride)

Process connection	
Threaded connection	2" NPT [(Taper), ANSI/ASME B1.20.1] R 2" [(BSPT), EN 10226] or G 2" [(BSPP), EN ISO 228-1]
Flange connection	3 inch (80 mm) universal flange
Other connection	FMS 200 mounting bracket (see page 5/189) or customer supplied mount
Display and Controls	
Interface	Local: LCD display with bar graph Remote: Available via HART or PROFIBUS PA
Configuration	Using Siemens SIMATIC PDM (PC) or HART handheld communicator or Siemens infrared handheld programmer
Memory	Non-volatile EEPROM
Power supply	
4 ... 20 mA/HART	Nominal 24 V DC with 550 Ω maximum; maximum 30 V DC 4 ... 20 mA
PROFIBUS PA	12, 13, 15, or 20 mA depending on programming (General Purpose or Intrinsically Safe version) per IEC 61158-2
Certificates and Approvals	
General	$CSA_{US/C}$, FM, CE, RCM
Marine (only applies to HART communication option)	• Lloyd's Register of Shipping • ABS Type Approval
Hazardous	
• Intrinsically Safe (Europe)	ATEX II 1G Ex ia IIC T4 Ga
• Intrinsically Safe (USA/Canada)	CSA/FM, Class I, Div. 1, Groups A, B, C, D; Class II, Div. 1, Groups E, F, G; Class III T4
• Intrinsically Safe (International)	SIR 13.0008X Ex ia IIC T4 Ga
• Intrinsically Safe (Brazil)	INMETRO Ex ia IIC T4 Ga
• Non-incendive (USA)	FM Class I, Div. 2, Groups A, B, C, D T4
Handheld Programmer	
Intrinsically Safe Siemens handheld programmer	Infrared receiver
• Approvals for handheld programmer	ATEX II 1GD / IECEx SIR 09.0073 Ex ia IIC T4 Ga Ex iaD 20 T135 °C FM/CSA Class I, II, III, Div. 1, Groups A, B, C, D, E, F, G T6
Ambient temperature	-20 ... 50 °C (-5 ... 122 °F)
Interface	Proprietary infrared pulse signal
Power	3 V lithium battery (non-replaceable)

© Siemens 2020

Selection and ordering data

	Article No.
SITRANS Probe LU Ultrasonic level transmitter ↗	**7ML5221-** ■ ■ ■ ■ ■
Continuous, non-contact, up to 12 m (40 ft) range. Monitors level and volume in liquids and slurries. With optional PROFIBUS PA.	
↗ Click on the Article No. for the online configuration in the PIA Life Cycle Portal.	
Enclosure/Cable Inlet	
Plastic (PBT), 1 x M20 x 1.5 and 1 x ½" NPT (no cable glands supplied)	**0**
Plastic (PBT), 2 x M20 x 1.5 (includes 1 general purpose cable gland: 7ML1930-1AM)	**1**
Plastic (PBT), 2 x ½" NPT (no cable glands supplied)	**2**
Range/Transducer material	
6 m (20 ft), ETFE	**A**
6 m (20 ft), PVDF Copolymer	**B**
12 m (40 ft), ETFE	**C**
12 m (40 ft), PVDF Copolymer	**D**
Process connection	
2" NPT [(Taper), ANSI/ASME B1.20.1]	**A**
R 2" [(BSPT), EN 10226]	**B**
G 2" [(BSPP), EN ISO 228-1]	**C**
Communication/Output	
4 ... 20 mA, HART	**1**
PROFIBUS PA	**2**
Approvals	
General Purpose, FM, $CSA_{US/C}$, CE, RCM, KCC	**1**
Non-incendive, FM Class I, Div. 2, Groups A, B, C, D T5[1]	**4**
Intrinsically Safe, CSA/FM Class I, Div. 1, Groups A, B, C, D; Class II, Div. 1, Groups E, F, G; Class III T4[2]	**5**
Intrinsically Safe ATEX 1G/IECEx/INMETRO Ex ia IIC T4 Ga, RCM, KCC[2]	**6**
Intrinsically Safe ATEX 1G/IECEx/INMETRO Ex ia IIC T4 Ga, RCM, KCC[3]	**7**
Intrinsically safe, CSA/FM Class I, Div. 1, Groups A, B, C, D; Class II, Div. 1, Groups E, F, G; Class III T4[3]	**8**

[1] Available with Enclosure/Cable Inlet option 2 only.
[2] Available with Communication option 2 only.
[3] Available with Communication option 1 only.

	Order code
Further designs	
Please add "**-Z**" to Article No. and specify Order code(s).	
Stainless steel tag [69 x 50 mm (2.71 x 1.97 inch)]: Measuring-point number/identification (max. 27 characters) specify in plain text	**Y15**
Operating Instructions for HART/mA device	
All literature is available to download for free, in a range of languages, at	
http://www.siemens.com/processinstrumentation/documentation.	
Accessories	Article No.
Handheld programmer, Intrinsically Safe, EEx ia	**7ML5830-2AH**
Handheld programmer, General Purpose approvals	**A5E36563512**
Handheld programmer, Infrared, Intrinsically Safe, PROFIBUS PA	**7ML5830-2AJ**
HART modem/USB (for use with a PC and SIMATIC PDM)	**7MF4997-1DB**
2" BSP nylon plastic locknut	**7ML1830-1DQ**
2" NPT nylon plastic locknut	**7ML1830-1DT**
3" ASME, DN 65 PN 10, JIS 10K 3B ETFE Flange adapter for 2" NPT	**7ML1830-1BT**
3" ASME, DN 65 PN 10, JIS 10K 3B ETFE Flange adapter for 2" BSPT	**7ML1830-1BU**
One General Purpose polymeric cable gland M20 x 1.5, rated for -20 ... +80 °C (-4 ... +176 °F)	**7ML1930-1AM**
One metallic cable gland M20 x 1.5, rated -40 ... +80 °C (-40 ... +176 °F) for General Purpose or ATEX EEx e installations (available for HART only)	**7ML1930-1AP**
One metallic cable gland M20 x 1.5, rated -40 ... +80 °C (-40 ... +176 °F) with integrated shield connection (available for PROFIBUS PA)	**7ML1930-1AQ**
Universal box bracket, FMS-200	**7ML1830-1BK**
Probe LU rock guard and sunshield	**7ML1930-1GH**
SITRANS RD100, loop powered display - see Chapter 7	**7ML5741-.....-.**
SITRANS RD150, remote digital display for 4 ... 20 mA and HART devices - see Chapter 7	**7ML5742-.....-....**
SITRANS RD200, universal input display with Modbus conversion - see Chapter 7	**7ML5740-.....-..**
SITRANS RD300, dual line display with totalizer and linearization curve and Modbus conversion - see Chapter 7	**7ML5744-.....-..**
For applicable back up point level switch see point level measurement section.	
Spare Parts	
Plastic lid	**7ML1830-1KB**

© Siemens 2020

Options

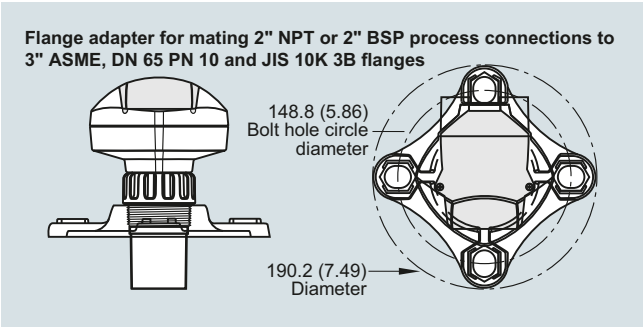

SITRANS Probe LU optional flange adapter, dimensions in mm (inch)

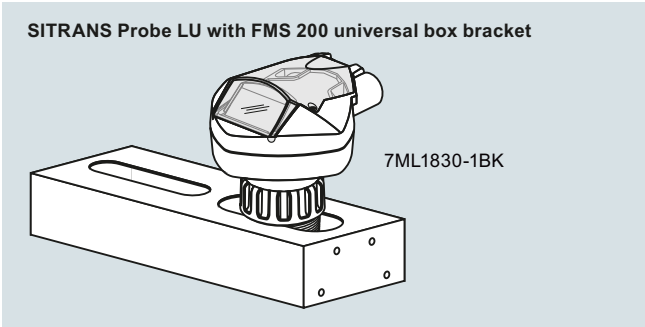

SITRANS Probe LU with optional mounting bracket

Dimensional drawings

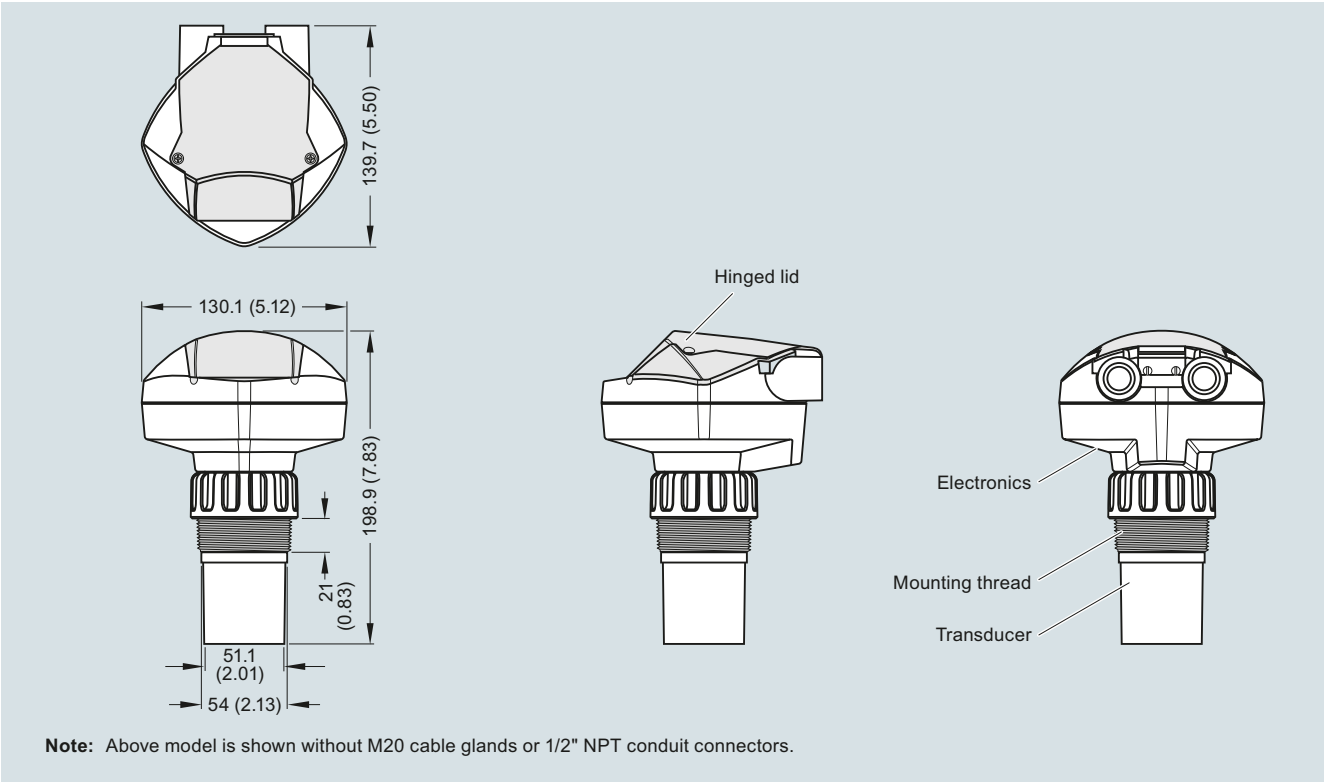

Note: Above model is shown without M20 cable glands or 1/2" NPT conduit connectors.

SITRANS Probe LU, dimensions in mm (inch)

© Siemens 2020

Circuit diagrams

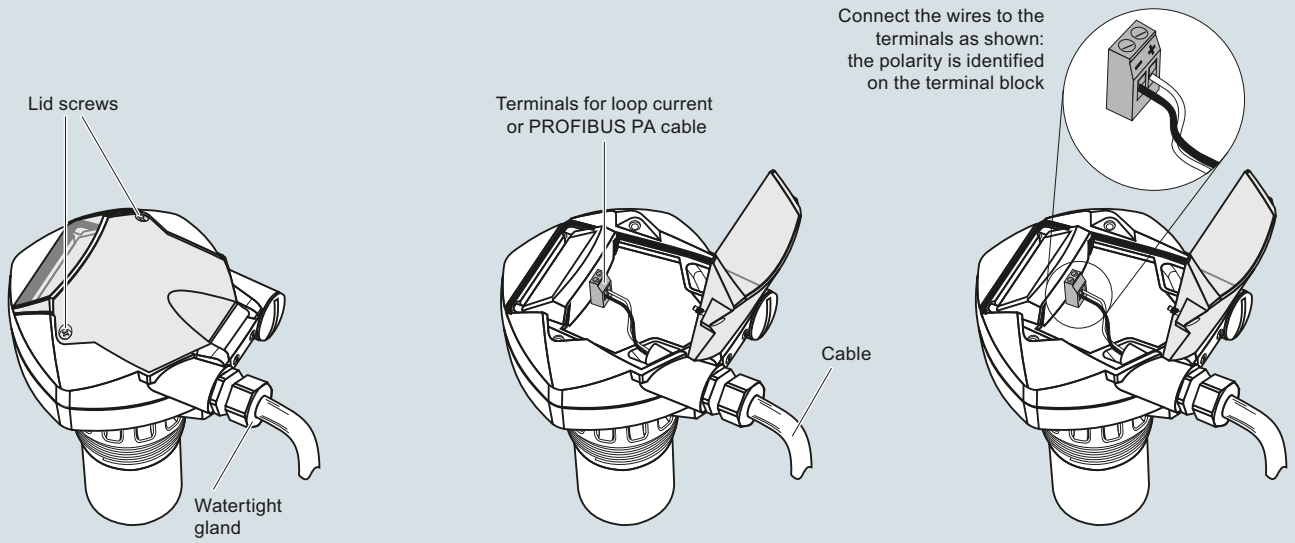

Note:

- HART model above is shown with M20 cable glands. 1/2" NPT threaded connection is also available.
- DC terminal shall be supplied from an SELV source in accordance with IEC-1010-1 Annex H.
- All field wiring must have insulation suitable for rated input voltages.
- Separate cables and conduit may be required to conform to standard instrumentation wiring practices or electrical codes.

SITRANS Probe LU connections

© Siemens 2020

Overview

SITRANS Probe LU240 ultrasonic level transmitter, ideal for level, volume, and volume flow measurements. It works with liquids, slurries, and bulk materials up to 12 m (40 ft).

Benefits

- Continuous level measurement up to 12 m (40 ft) range
- Easy installation and simple startup
- Programming using 4-button HMI or SIMATIC PDM
- Communication using HART
- ETFE or PVDF transducers for chemical compatibility
- Process Intelligence signal processing
- Auto False Echo Suppression for fixed obstruction avoidance
- Low power and current startup

Application

SITRANS Probe LU240 is ideal for level monitoring in the water and wastewater industry, chemical storage vessels, and small bulk hoppers.

The range of SITRANS Probe LU240 is 3, 6, or 12 m (10, 20, or 40 ft). Probe LU240 provides unmatched reliability, using Process Intelligence, Auto False Echo Suppression for fixed obstruction avoidance, and accuracy of 0.15 % of range or 6 mm (0.25 inch) (on 6 m and 12 m models only).

SITRANS Probe LU240 offers HART communication on certain models and mA output on all models.

The transducer on the Probe LU240 is available as ETFE or PVDF to suit the chemical conditions of your application. As well, for applications with varying material and process temperatures, Probe LU240 incorporates an internal temperature sensor to compensate for temperature changes.

- Key Applications: chemical storage vessels, filter beds, liquid storage vessels

Configuration

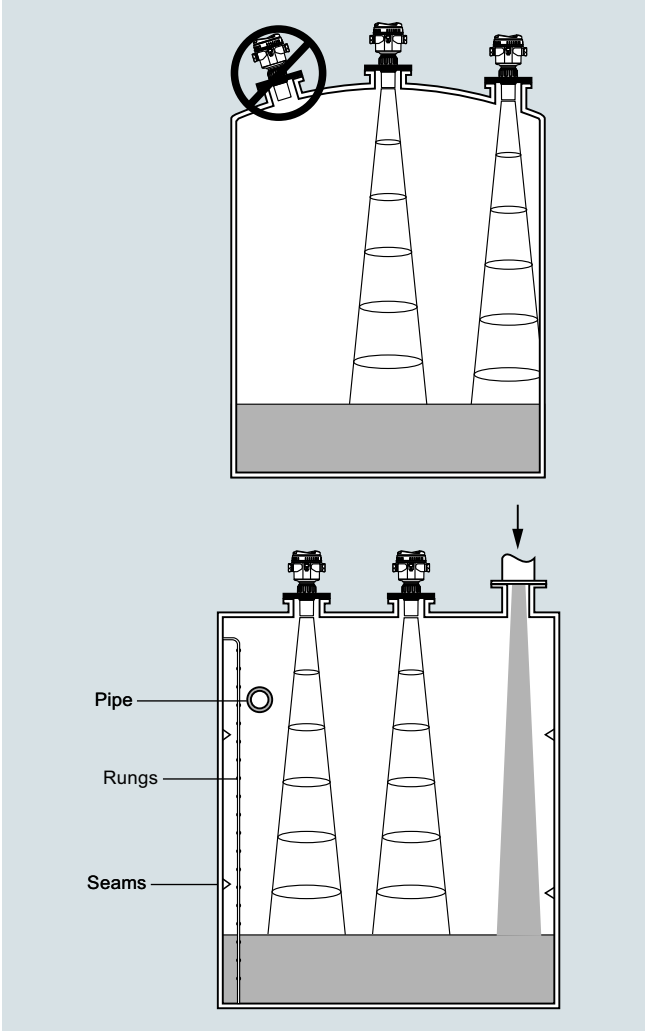

SITRANS Probe LU240 mounting

© Siemens 2020

Technical specifications

Mode of operation	
Measuring principle	Ultrasonic level measurement
Typical application	Level measurement in storage vessels and simple process vessels
Inputs	
Measuring range	
• 3 m (10 ft)	0.2 ... 3 m (8 inch ... 10 ft)
• 6 m (20 ft) model	0.2 ... 6 m (8 inch ... 20 ft)
• 12 m (40 ft) model	0.2 ... 12 m (8 inch ... 40 ft)
Frequency	54 kHz
Outputs	
mA/HART	
• Range	4 ... 20 mA
• Accuracy	± 0.02 mA
• HART version	7
• Startup current	3.6 mA
• Fail-safe	Programmable as high, low, or hold (loss of echo) per NAMUR NE43
Performance	
Resolution	≤ 3 mm (0.12 inch)
Accuracy	
3 m (10 ft)	10 mm (0.39 inch)
6 m (20 ft), 12 m (40 ft)	± the greater of 0.15 % of range or 6 mm (0.25 inch) [valid from 0.25 m (0.82 ft)]
Non-repeatability	≤ 3 mm (0.12 inch)
Blanking distance	0.2 m (0.66 ft)
Update time	≤ 4 s
Temperature compensation	Built-in to compensate over temperature range
Beam angle	10°
Rated operating conditions	
Ambient conditions	
• Location	Indoor/outdoor
• Ambient temperature	• Storage: -40 ... +85 °C (-40 ... +185 °F) • Operating: -40 ... +80 °C (-40 ... +176 °F)
• Relative humidity/ingress protection	Suitable for outdoor
• Installation category	I
• Pollution degree	4
Medium conditions	
• Temperature at flange or threads	-40 ... +85 °C (-40 ... +185 °F)
• Pressure (vessel)	0.5 bar g (7.25 psi g)
Display	-20 … +80 °C (-4 … +176 °F)
Design	
Material (enclosure)	PBT (Polybutylene Terephthalate)
Degree of protection	Type 4X, Type 6, IP66, IP68
Weight	0.93 kg (2.1 lb)
Cable inlet	2 x M20 x 1.5 cable gland or 1 x ½" NPT thread
Material (transducer)	ETFE (Ethylene Tetrafluoroethylene) or PVDF (Polyvinylidene Fluoride) Buna-N seal

Process connection	
Threaded connection	2" NPT [(Taper), ASME B1.20.1] R 2" [(BSPT), EN 10226] or G 2" [(BSPP), EN ISO 228-1]
Flange connection	3 inch (80 mm) universal flange
Other connection	FMS 200 mounting bracket (see page 4/186) or customer supplied mount
Display and Controls	
Interface	Local: LCD display Remote: Available via HART
Configuration	4-button HMI
Memory	Non-volatile EEPROM, no battery required
Power supply	
4 ... 20 mA/HART	10.5 ... 30 V DC
Certificates and Approvals	
General	FM, $_{C}$CSA$_{US}$, CE, RCM, EAC, KC, VLAREM
Hazardous	
• Intrinsically Safe	
- Europe	ATEX II 1G Ex ia IIC T4 Ga
- International	IECEx SIR 18.0013X Ex ia IIC T4 Ga
- USA/Canada	FM/$_{C}$CSA$_{US}$ Class I, Div. 1, Groups A, B, C, D, Class II, Div. 1, Groups E, F, G, Class III T4
- Brazil	INMETRO Ex ia IIC T4 Ga
- China	NEPSI Ex ia IIC T4 Ga
- South Africa	SABS Ex ia IIC Tx Ga
- Russia	EAC Ex 1G Ex ia IIC T4 Ga
- Korea	KOSHA KSs Ex ia IIC T4
• Non-incendive	
- USA	FM, Class I, Div. 2, Groups A, B, C, D Tx
Marine	Lloyd's Register, American Bureau of Shipping (ABS), DNV GL, Bureau Veritas, CCS
Metrological	MCERTS, CPA, Kazakhstan pattern approval

© Siemens 2020

Selection and ordering data

	Article No.
SITRANS Probe LU240 Ultrasonic level transmitter ↗ Continuous, non-contact, up to 12 m (40 ft) range. Monitors level, volume, and volume flow (model dependent) in liquids, slurries, and solids. With easy to use quick start wizards. ↗ Click on the Article No. for the online configuration in the PIA Life Cycle Portal.	**7ML51-** **1 ■ - ■ ■ ■ 0 ■ - 4 ■ ■ ■**
Communications	
HART (4 ... 20 mA) level, volume, volume flow[5]	**0**
4 ... 20 mA level[6]	**7**
Ingress protection	
IP66, IP68, Type 4X, 6	**1**
Measurement range/wetted parts	
200 ... 3 000 mm (7.87 ... 118.11 inch), PVDF Copolymer	**B**
200 ... 3 000 mm (7.87 ... 118.11 inch), ETFE	**C**
200 ... 6 000 mm (7.87 ... 236.22 inch), PVDF Copolymer	**D**
200 … 6 000 mm (7.87 ... 236.22 inch), ETFE	**E**
200 … 12 000 mm (7.87 ... 472.44 inch), PVDF Copolymer	**G**
200 … 12 000 mm (7.87 ... 472.44 inch), ETFE	**H**
Process connection	
2" NPT [(Taper), ASME B1.20.1]	**D**
R 2" [(BSPT), EN 10226]	**E**
G 2" [(BSPP), EN ISO 228-1]	**F**
Non-wetted parts	
Plastic (PBT/PC material)	**7**
Type of protection	
Non-Ex (ordinary locations) $_{c}CSA_{US}$, CE, KC, RCM, EAC	**A**
Non-Ex (ordinary locations) $_{C}CSA_{US}$, FM, CE, KC, RCM, EAC[1]	**B**
Ex i (ia) (Ex-Zone 0/Div. 1)/IS, FM NI (Class I, Div. 2)[2]	**C**
Electrical connections/cable entries	
2 x M20 x 1.5 (one general purpose Polyamide cable gland and one Polyamide blocking plug provided)	**F**
1 x 1/2" NPT (no gland cable provided)	**K**
For custom electrical connections/cable entries, contact a local sales person. For more information please visit: http://www.automation.siemens.com/aspa_app	
Local HMI	
Without display (blind lid of PBT/PC material)	**0**
With display (blind lid of PBT/PC material)	**1**
With display (clear lid of PC material)	**3**

	Order code
Further designs	
Please add "**-Z**" to Article No. and specify Order code(s).	
Stainless steel tag [13 x 45 mm (0.5 x 1.75 inch)]: Measuring-point number/identification (max. 32 characters) specify in plain text	**Y15**
Certificates	
Test certificate: Manufacturer's test certificate M to DIN 55350, Part 18 and ISO 9000	**C11**
Certificate EN 10204-2.2	**C14**
Approvals[3]	
ATEX, SABS, IECEx - 1G, EAC Ex, Ex ia IIC T4 Ga	**E31**
FM non-incendive - Class I, Div. 2, Groups A, B, C, D T5 (Ta = 80 °C), T6 (Ta = 40 °C)[1]	**E32**
NEPSI, KCs, IECEx - Ex ia IIC T4 Ga	**E33**
$_{C}CSA_{US}$, KCs, FM - Class I, II, III, Div. 1, Groups A, B, C, D, E, F, G, T4, INMETRO, IECEx - Ex ia IIC T4 Ga[1]	**E34**
Marine approvals[4]	
DNV-GL Det Norske Veritas/Germanischer Lloyd	**E50**
LR Lloyds Register	**E51**
BV Bureau Veritas	**E52**
ABS American Bureau of Shipping	**E53**
China Classification Society (CCS)	**E58**
For customs, contact a local sales person. For more information please visit http://www.automation.siemens.com/aspa_app.	
Operating Instructions	
All literature is available to download for free, in a range of languages, at http://www.siemens.com/processinstrumentation/documentation	
Accessories	Article No.
Tag, stainless steel, 12 x 45 mm, one text line (max. 16 characters)	**7ML1930-1AC**
Stainless steel FMS200 universal box bracket mounting kit	**7ML1830-1BK**
3" ASME/DIN Universal mounting adapter, 2" NPT, ETFE	**7ML1830-1BT**
3" ASME/DIN Universal mounting adapter, 2" BSP, ETFE	**7ML1830-1BU**
2" NPT nylon plastic locknut	**7ML1830-1DT**
2" BSP nylon plastic locknut	**7ML1830-1DQ**
Cable Gland Polyamide - General Purpose (-20 ... +60 °C)	**A5E34457564**
Spare Parts	
Spare lid, clear	**A5E44267491**
Spare lid, blind	**A5E44267497**
Spare o-ring for lid	**A5E44267501**
Spare segmented display and 4-button HMI	**A5E44809382**

1) Available only with Electrical connections/cable entries option K only.
2) Available only with order codes E31, E32, E33, and E34.
3) Order codes E31, E32, E33, E34 only available with Type of protection option C.
4) Order codes E50, E51, E54, E53, E58 only available with Communications option 0.
5) Available only with Measurement range/wetted parts options D, E, G, and H.
6) Available only with Measurement range/wetted parts options B and C.

© Siemens 2020

Options

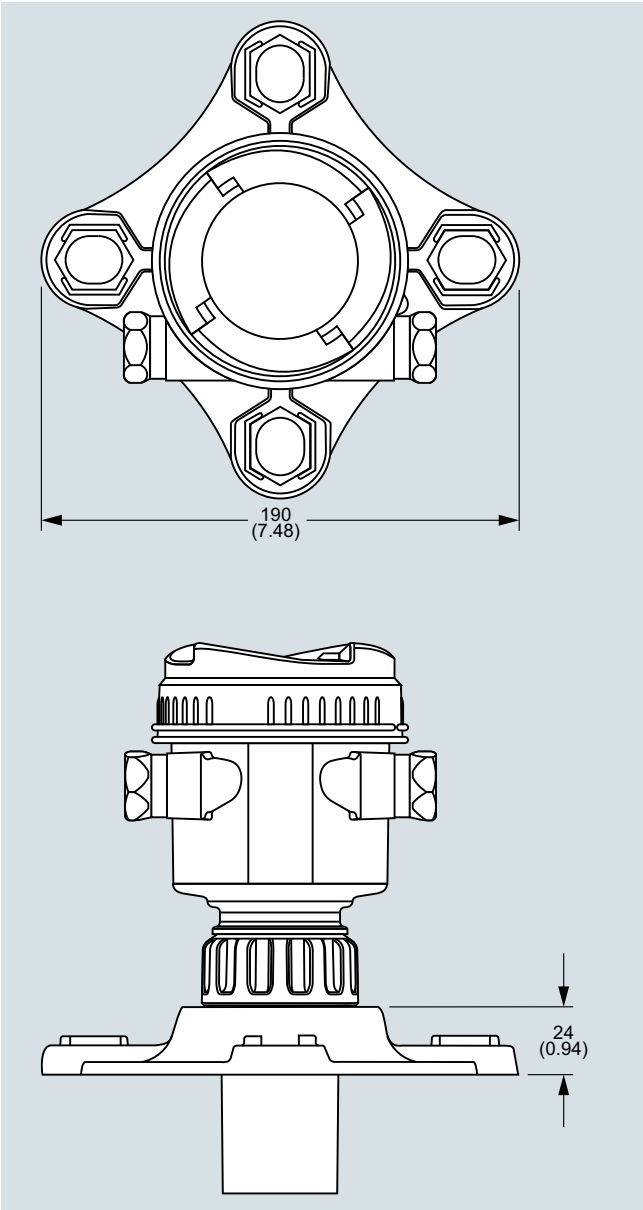

SITRANS Probe LU240 optional flange adapter, dimensions in mm (inch)

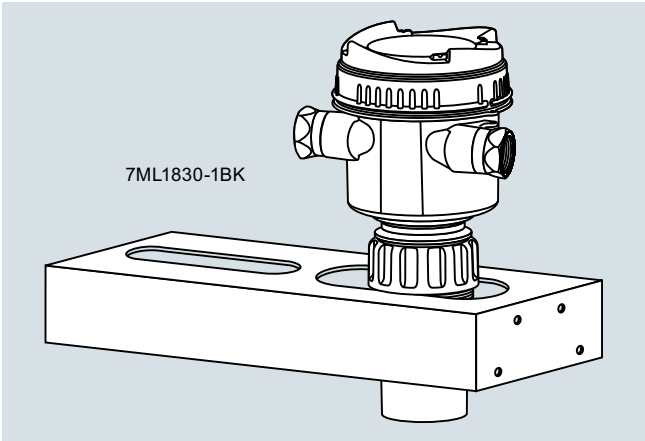

SITRANS Probe LU240 with optional FMS 200 universal box bracket

© Siemens 2020

Dimensional drawings

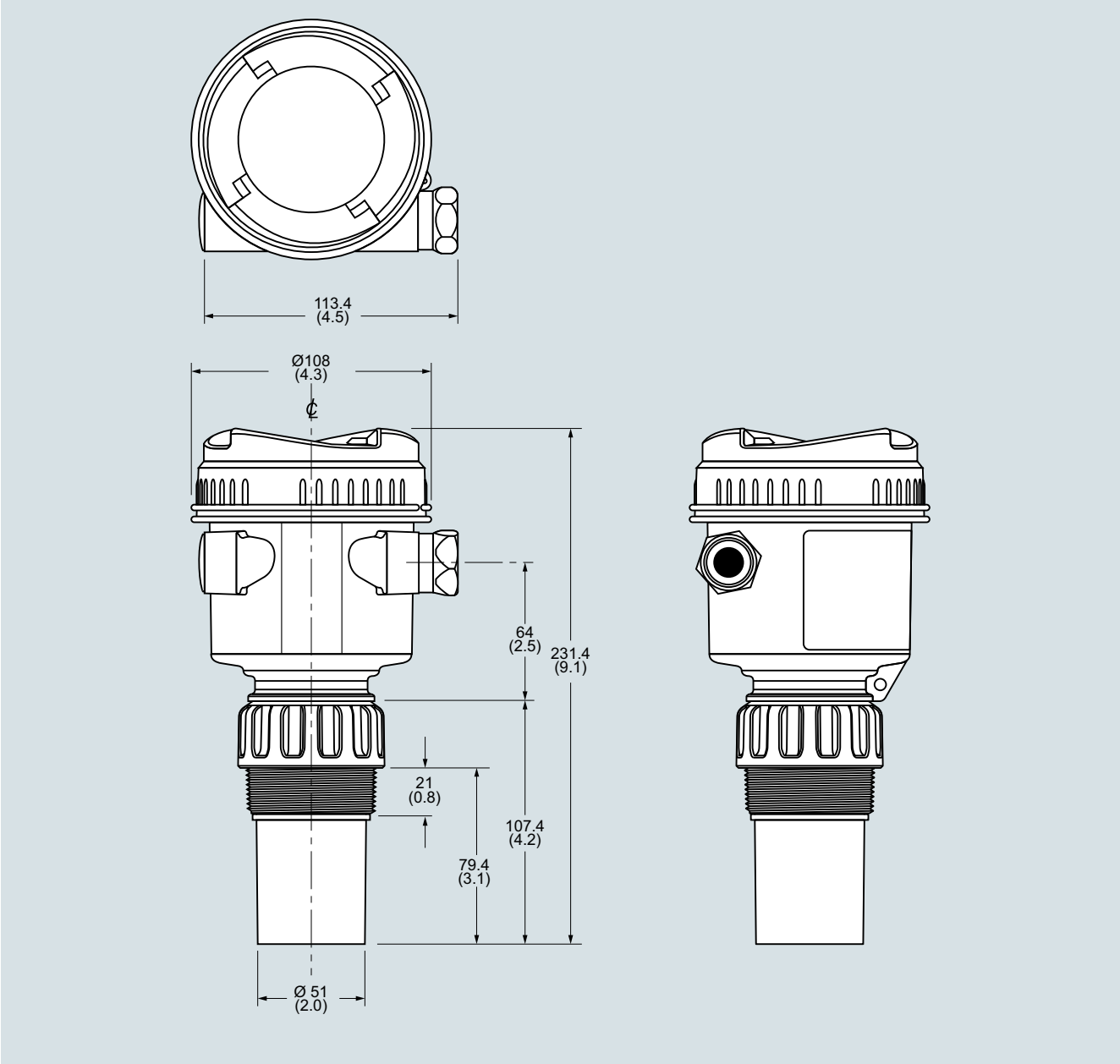

SITRANS Probe LU240, dimensions in mm (inch)

© Siemens 2020

Circuit diagrams

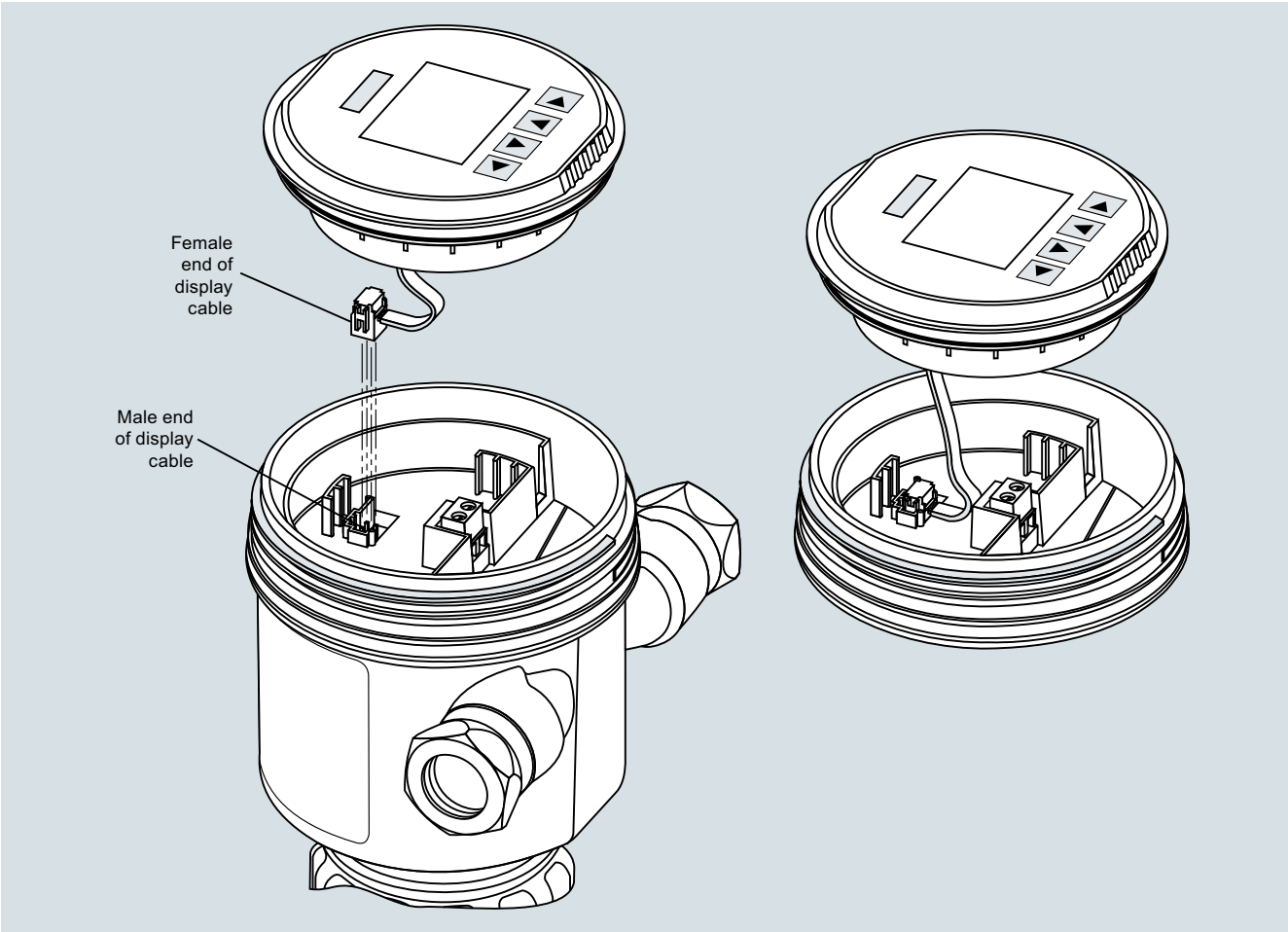

SITRANS Probe LU240 connections

© Siemens 2020

Overview

The Probe is a short-range integrated ultrasonic level transmitter, ideal for liquids and slurries in open or closed vessels.

Benefits

- Easy to install, program, and maintain
- Accurate and reliable
- Sanitary models available
- Sonic Intelligence echo processing
- Integral temperature compensation

Application

The transducer is available in PVDF copolymer, making the device suitable for use in a wide variety of applications. The Probe is easy to install and maintain, and can be quickly removed for cleaning as required by the food, beverage and pharmaceutical industries.

The reliability of the level data is based on the Sonic Intelligence echo processing algorithms. A filter discriminates between the true echo and false echoes from acoustic or electrical noises and agitator blades in motion. The ultrasonic pulse propagation time to the material and back is temperature-compensated and converted into distance for display, analog output and relay actuation.

- Key Applications: chemical storage vessels, filter beds, mud pits, liquid storage vessels, food applications

Configuration

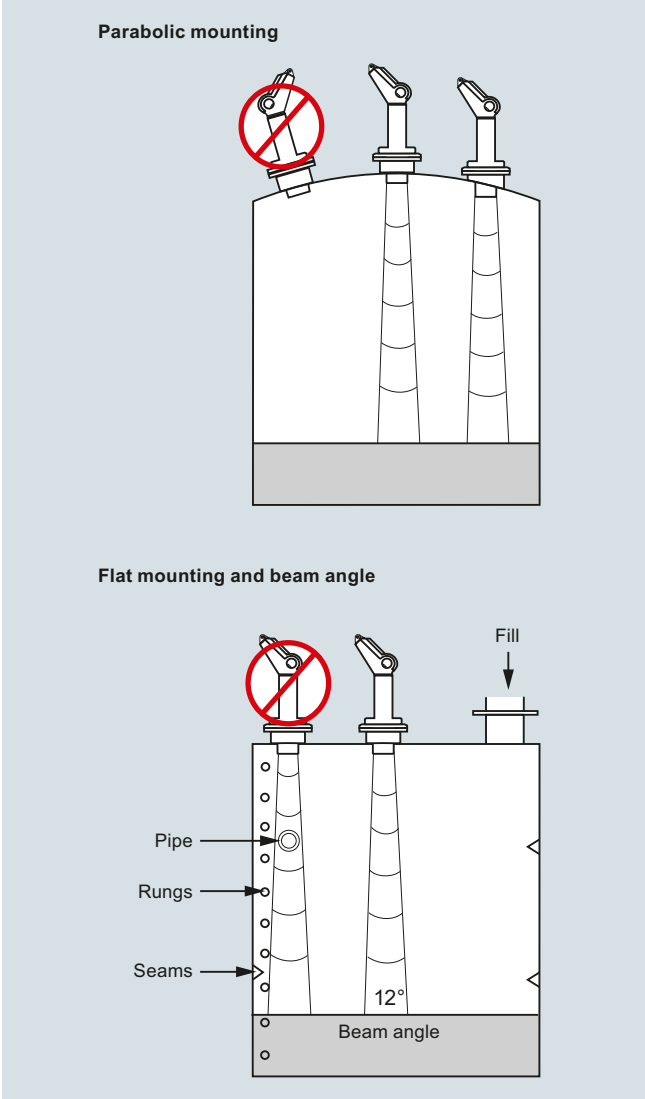

The Probe mounting

© Siemens 2020

Technical specifications

	3-wire version
Mode of operation	
Measuring principle	Ultrasonic level measurement
Input	
Measuring range	0.25 ... 5 m (0.8 ... 16.4 ft)
Frequency	54 kHz
Output	
mA	4 ... 20 mA
• Span	Proportional/ inversely proportional
• Max. load	750 Ω at 24 V DC
Relay	For level alarm or fault
Power supply	
Supply voltage	18 ... 30 V DC, max. 0.2 A
Max. power consumption	5 W (200 mA at 24 V DC)
Certificates and approvals	CE, RCM, $CSA_{US/C}$, FM
Accuracy	
Error in measurement	0.25 % of measuring range (in air)
Resolution	3 mm (0.125 inch)
Temperature compensation	Built in
Echo processing	Sonic Intelligence
Rated operation conditions	
Beam angle	12°
Ambient temperature	
• Standard	-40 ... +60 °C (-40 ... +140 °F)
• Metallic mounting	-20 ... +60 °C (-4 ... +140 °F)
Storage temperature	
• Standard	-40 ... +60 °C (-40 ... +140 °F)
• Metallic mounting	-20 ... +60 °C (-4 ... +140 °F)
Max. static operating pressure	Normal atmospheric pressure
Degree of protection	IP65
Design	
Weight	
• Without flange adapter	1.5 kg (3.3 lb)
• With flange adapter	1.7 kg (3.7 lb)
Material	
• Electronics enclosure	PVC
• Transducer	PVDF copolymer
Degree of protection	IP65
Process connection	• 2" NPT [(Taper), ANSI/ASME B1.20.1] • R 2" [(BSPT), EN 10226] • G 2" [(BSPP), EN ISO 228-1] • 4" sanitary
Flange adapter	3" Universal (fits DN 65, PN 10 and 3" ASME)
Cable inlet	2 inlets for PG 16 or ½" NPT cable glands

Selection and ordering data

	Article No.
The Probe Ultrasonic level transmitter ↗	**7ML1201-**
Continuous, non-contact, 5 m (16.4 ft) range. Monitors level for liquids and slurries. With 3-wire relay output.	■ ■ ■ **0 0**
↗ Click on the Article No. for the online configuration in the PIA Life Cycle Portal.	
Measuring range	
5 m (16.40 ft)	**1**
Transducer/Process connection	
PVDF copolymer, 2" NPT [(Taper), ANSI/ASME B1.20.1]	**E**
PVDF copolymer, R 2" [(BSPT), EN 10226]	**F**
PVDF copolymer, G 2" [(BSPP), EN ISO 228-1]	**G**
PVDF copolymer, 4" Sanitary mounting	**J**
Model/Approval	
3-wire, 24 V DC, CE, RCM, CSA, FM	**E**
Further designs	Order code
Please add "**-Z**" to Article No. and specify Order code(s).	
Acrylic coated, stainless steel tag [13 x 45 mm (0.5 x 1.75 inch)]: Measuring-point number/identification (max. 20 characters) specify in plain text	**Y17**
Operating Instructions	
All literature is available to download for free, in a range of languages, at	
http://www.siemens.com/processinstrumentation/documentation	
Accessories	Article No.
Universal Box Bracket Mounting kit	**7ML1830-1BK**
Sanitary 4" mounting clamp	**7ML1830-1BR**
3" ASME, DN 65 PN 10, JIS 10K 3B ETFE Flange adapter for 2" NPT	**7ML1830-1BT**
3" ASME, DN 65 PN 10, JIS 10K 3B ETFE Flange adapter for 2" BSPT	**7ML1830-1BU**
2" NPT nylon plastic locknut	**7ML1830-1DT**
2" BSP nylon plastic locknut	**7ML1830-1DQ**
Plastic M20 cable gland with metal locknut	**7ML1930-1DB**
SITRANS RD100, loop powered display - see Chapter 7	**7ML5741-.....-.**
SITRANS RD150, remote digital display for 4 ... 20 mA and HART devices - see Chapter 7	**7ML5742-.....-....**
SITRANS RD200, universal input display with Modbus conversion - see Chapter 7	**7ML5740-.....-..**
SITRANS RD300, dual line display with totalizer and linearization curve and Modbus conversion - see Chapter 7	**7ML5744-.....-..**
For applicable back up point level switch see point level measurement section.	

© Siemens 2020

Options

Flange adapter for mating 2" NPT or 2" BSP process connections to 3" ANSI, DN 65 PN10, and JIS 10K 3B flanges

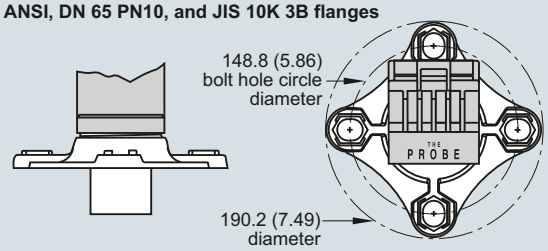

The Probe optional flange adapter, dimensions in mm (inch)

The Probe with FMS 200 mounting bracket

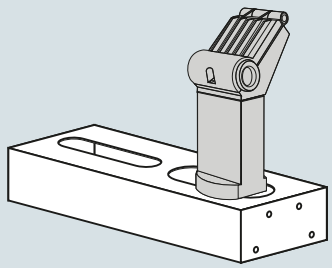

The Probe with optional mounting bracket

Circuit diagrams

3 wire model
(standard and sanitary models)

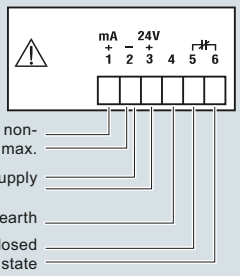

Display

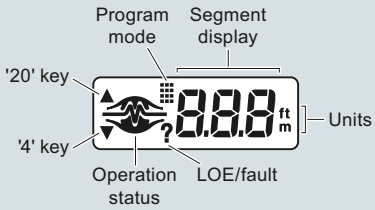

The Probe connections

Dimensional drawings

Standard model

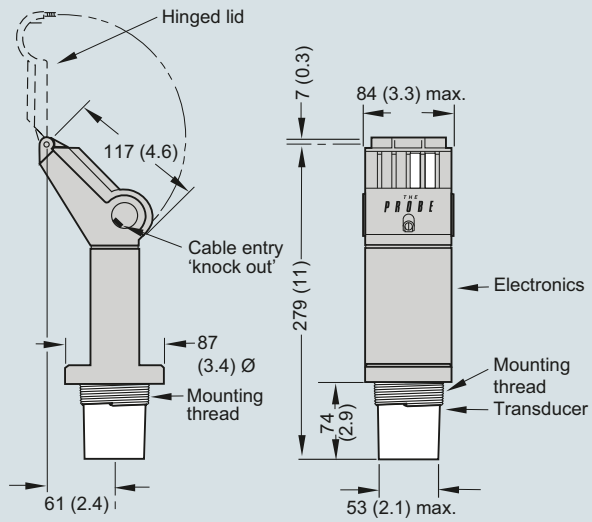

Sanitary model

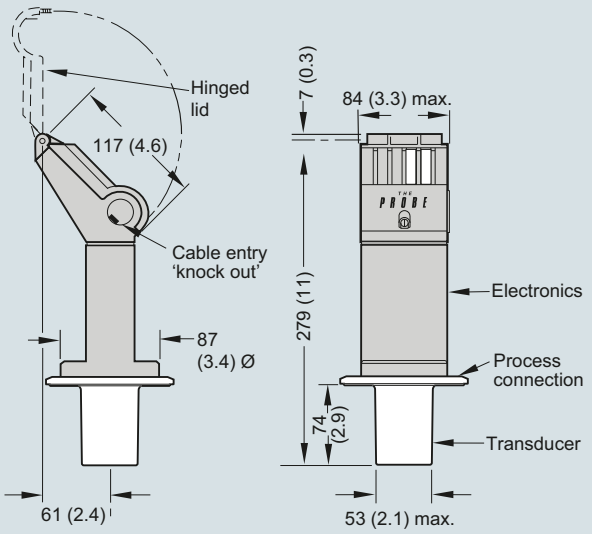

The Probe, dimensions in mm (inch)

4

© Siemens 2020

Overview

Ultrasonic Transducers

Ultrasonic measuring systems are the cost-effective choice for monitoring and control in short- to long-range applications for liquids, slurries, and solids in a wide range of industries. Transducers are impervious to dust, moisture, corrosion, vibration, flooding, and extreme temperature. They are easy to install and virtually maintenance-free. Choose from a wide selection of models designed for short or long range applications on liquids or solids.

Technical specifications

EchoMax Transducers					
	Liquids		**Liquids and Solids**		
			Standard		
	XRS-5	**ST-H**	**XPS-10**	**XPS-15**	**XPS-30**
Max. range[1)]	8 m (26 ft)	10 m (33 ft)	10 m (33 ft)	15 m (50 ft)	30 m (100 ft)
Min. range	0.3 m (1 ft)	0.3 m (1 ft)	0.3 m (1 ft)	0.3 m (1 ft)	0.6 m (2 ft)
Max. temperature	65 °C (149 °F)	73 °C (164 °F)	95 °C (203 °F)	95 °C (203 °F)	95 °C (203 °F)
Min. temperature	-20 °C (-4 °F)	-40 °C (-40 °F)	-40 °C (-40 °F)	-40 °C (-40 °F)	-40 °C (-40 °F)
Typical Applications	Wet wells and open channels	Chemical storage and liquid tanks	Dusty solids and slurries	Deep wet wells and solids	Powders, pellets and solids
Frequency	44 kHz	44 kHz	44 kHz	44 kHz	30 kHz
Beam angle (-3dB)	10°	12°	12°	6°	6°
Thread size	R 1" [(BSPT), EN 10226] 1" NPT	1" and 2" NPT R 2" [(BSPT), EN 10226] 2" [(BSPP), EN ISO 228-1]	R 1" [(BSPT), EN 10226] 1" NPT	R 1" [(BSPT), EN 10226] 1" NPT	R 1.5" [(BSPT), EN 10226] Universal thread 1.5" NPT
Enclosure	• PVDF Copolymer • CSM • Option: Flange with PTFE facing	• ETFE • Option: PVDF	• PVDF • Option: foam facing • Flange with PTFE facing	• PVDF • Option: foam facing • Flange with PTFE facing	• PVDF • Option: foam facing • Flange with PTFE facing
Compatible with:					
SITRANS LUT400	•	•	•	•	•
HydroRanger 200	•	•	•	•	
MultiRanger 100/200	•	•	•	•	

1) Max range is rated for measurement of liquids, recommended range for solids is 50 % of maximum. Application conditions such as extreme dust or angle of repose may reduce the usable maximum range. Consult a local sales person for more details.

© Siemens 2020

Overview

ST-H transducers use ultrasonic technology to measure level in chemical storage and liquid tanks.

Benefits

- Can be mounted on a narrow standpipe
- Immune to corrosive and harsh environments
- Integral temperature sensor

Application

The narrow design of the ST-H allows the transducer to be mounted on a narrow standpipe. When mounted correctly, it is completely protected from the process and can even be used in harsh, corrosive environments.

During operation, the ultrasonic transducer emits acoustic pulses in a narrow beam perpendicular to the transducer face. The level transceiver measures the propagation time between pulse emission and reception of the echo to calculate the distance from the transducer to the material. Variations in sound velocity due to changes in temperature within the permissible range are automatically compensated by the integral temperature sensor.

- Key Applications: chemical storage, liquid tanks

Technical specifications

Mode of operation	
Measuring principle	Ultrasonic transducer
Input	
Measuring range	0.3 ... 10 m (1 ... 33 ft)
Output	
Frequency	44 kHz
Beam angle	12°
Accuracy	
Temperature compensation	Compensated by integral temperature sensor
Rated operating conditions	
Pressure	Normal atmospheric pressure
Ambient conditions	
Ambient temperature	-20 ... +60 °C (-5 ... +140 °F) (ATEX approved model) -40 ... +73 °C (-40 ... +163 °F) (CSA/FM approved model)
Storage temperature	-20 ... +60 °C (-5 ... +140 °F)
Design	
Weight[1)]	1.4 kg (3 lb)
Material (enclosure)	Base and lid made of ETFE or PVDF (epoxy fitted joint)[2)]
Process connection	2" NPT [(Taper), ANSI/ASME B1.20.1], R 2" [(BSPT), EN 10226] or G 2" [(BSPP), EN ISO 228-1]
Degree of protection	IP68
Cable connection	2-core shielded/twisted, 0.519 mm^2 (20 AWG), PVC sheath
Cable (max. length)	365 m (1 200 ft) with RG 62 A/U coaxial cable
Options	
Flange adapter	3" Universal (fits DN 65, PN 10 and 3" ASME)
Certificates and approvals	CE, CSA Class I, II, III, Div. 1, Groups A, B, C, D, E, F, G T3 (ETFE only), FM Class I, II, Div. 1, Groups C, D, E, F, G T4A, ATEX II 2G / INMETRO Ex mb IIC T5 Gb, RCM, KCC

1) Approximate shipping weight of transducer with standard cable length

2) When measuring chemicals, check compatibility of ETFE or PVDF and epoxy, or mount joint external to process.

© Siemens 2020

Selection and ordering data

	Article No.
ST-H Ultrasonic level transducer ↗	**7ML1100-**
Continuous, non-contact, 0.3 m (1 ft) range, for liquids.	■ ■ **A** ■ **0**
↗ Click on the Article No. for the online configuration in the PIA Life Cycle Portal.	
Process connection	
ETFE, 2" NPT [(Taper), ANSI/ASME B1.20.1]	**0**
ETFE, R 2" [(BSPT), EN 10226]	**1**
ETFE, G 2" [(BSPP), EN ISO 228-1]	**2**
PVDF copolymer, 2" NPT [(Taper), ANSI/ASME B1.20.1]	**3**
PVDF copolymer, R 2" [(BSPT), EN 10226]	**4**
PVDF copolymer, G 2" [(BSPP), EN ISO 228-1]	**5**
Cable length	
5 m (16.40 ft)	**A**
10 m (32.81 ft)	**B**
30 m (98.43 ft)	**C**
50 m (164.04 ft)	**D**
100 m (328.08 ft)	**E**
Approvals	
CE, FM Class I, II, Div. 1, Groups C ,D ,E ,F ,G T4A[3]	**2**
ATEX 2G/INMETRO Ex mb IIC T5 Gb, RCM, KCC CSA Class I, II, III, Div. 1, Groups A, B, C, D, E, F, G T3[1]	**3**
CE, ATEX 2G/INMETRO Ex mb IIC T5 Gb, RCM, KCC[2]	**4**

1) Available with Process connection options 0 ... 2 only.
2) Available with Process connection options 3 ... 5 only.
3) Not suitable for Ketone, Hexane, Ester or Ethyl Acetate atmospheres.

	Order code
Further designs	
Please add "**-Z**" to Article No. and specify Order code(s).	
Acrylic coated, stainless steel tag [13 x 45 mm (0.5 x 1.75 inch)]: Measuring-point number/identification (max. 16 characters) specify in plain text	**Y17**
Accessories	Article No.
Universal box bracket, mounting kit	**7ML1830-1BK**
3" ASME, DN 65 PN 10, JIS 10K 3B ETFE flange adapter for 2" NPT	**7ML1830-1BT**
3" ASME, DN 65 PN 10, JIS 10K 3B ETFE flange adapter for 2" BSPT	**7ML1830-1BU**
Easy Aimer 2, aluminum, NPT with ¾" x 1" PVC coupling	**7ML1830-1AQ**
Easy Aimer 2, aluminum with M20 adapter and 1" and 1½" BSPT aluminum couplings	**7ML1830-1AX**
Easy Aimer 304, NPT with 1" stainless steel coupling	**7ML1830-1AU**
Easy Aimer 304, with M20 adapter and 1" and 1½" BSPT 304 stainless steel couplings	**7ML1830-1GN**
Plastic adapter 1" NPT	**7ML1930-1FX**
Plastic adapter 1" NPT/M20	**7ML1830-1EF**
Operating Instructions	
All literature is available to download for free, in a range of languages, at	

http://www.siemens.com/processinstrumentation/documentation

© Siemens 2020

Dimensional drawings

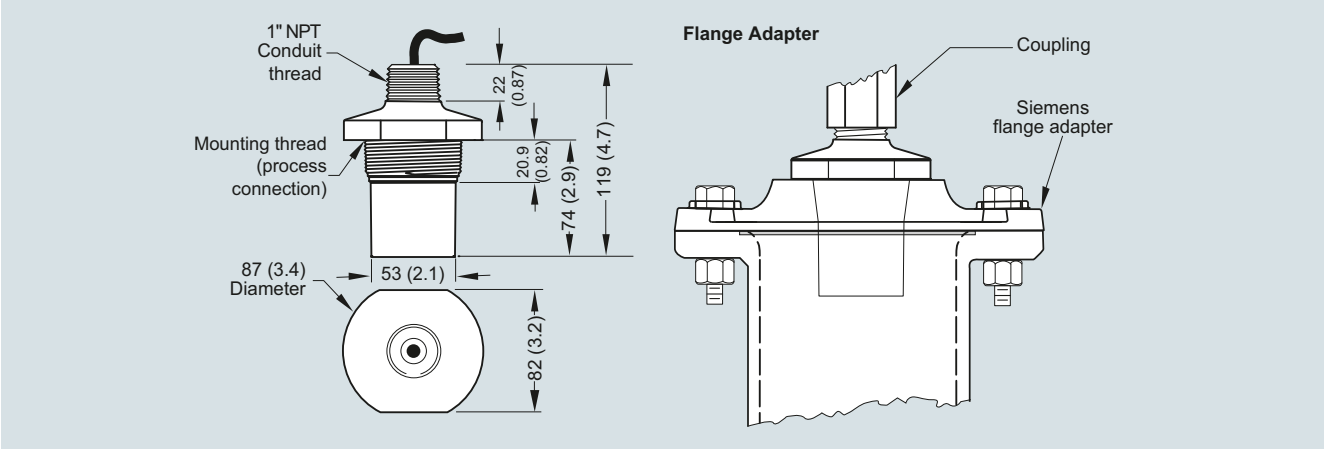

ST-H ultrasonic transducer, dimensions in mm (inch)

Circuit diagrams

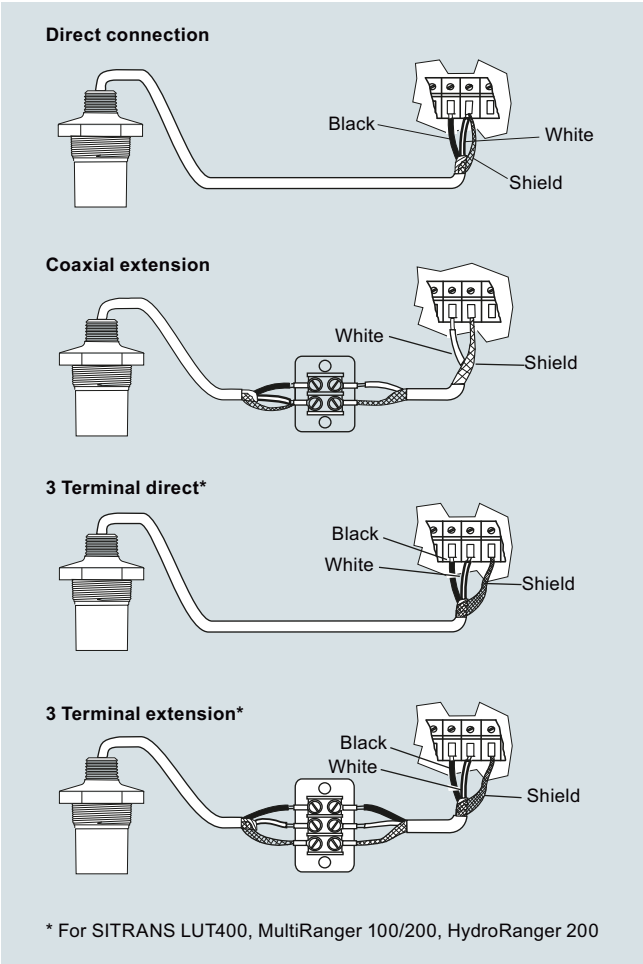

ST-H ultrasonic transducer connections

© Siemens 2020

Overview

EchoMax XRS-5 ultrasonic transducer provides reliable, continuous level monitoring of liquids and slurries in narrow lift stations/wet wells, flumes, weirs and filter beds using a beam angle of just 10° and a CSM rubber face.

Benefits

- Narrow beam angle of only 10°
- Chemically resistant PVDF copolymer enclosure and CSM rubber face
- Measuring range: 8 m (26 ft) for measurement of liquids and slurries
- Fully submersible: IP68 degree of protection
- Easy installation with 1" NPT or R 1" BSPT connection

Application

The XRS-5 is non-contacting with a measuring range from 0.3 to 8 m (1 to 26 ft). Advanced echo processing ensures reliable data even in conditions with obstructions, turbulence, and foam.

The hermetically sealed CSM rubber face and the PVDF copolymer enclosure are designed for maximum resistance to methane, salt water, caustics, and harsh chemicals common to wastewater installations. With an IP68 degree of protection, this rugged sensor is fully submersible in the event of flood conditions. Use a submergence shield if full submergence is possible in the application. A submergence shield will maintain a high level reading output during submerged conditions.

The low-cost XRS-5 transducer is compatible with a full range of Siemens controllers, from a basic system for high/low alarm or simple pump control, up to advanced control systems with communications, telemetry and SCADA integration capabilities.

- Key Applications: wet wells, flumes, weirs, filter beds

Technical specifications

Mode of operation	
Measuring principle	Ultrasonic transducer
Input	
Measuring range	0.3 ... 8 m (1 ... 26 ft), dependent on application
Output	
Frequency	44 kHz
Beam angle	10°
Accuracy	
Temperature error	Compensated by integral temperature sensor
Rated operating conditions	
Vessel pressure	Normal atmospheric pressure
Ambient Conditions	
• Ambient temperature	-20 ... +65 °C (-4 ... +149 °F)
• Storage temperature	-20 ... +65 °C (-4 ... +149 °F)
Design	
Weight (approximate shipping weight of sensor with standard cable length)	1.2 kg (2.6 lb)
Material (enclosure)	PVDF copolymer enclosure and CSM face
Process connection	1" NPT [(Taper), ANSI/ASME B1.20.1] or R 1" [(BSPT), EN 10226]
Degree of protection	IP65/IP68
Cable connection	2-core shielded/twisted, 0.5 mm^2 (20 AWG), PVC sheath
Cable (max. length)	• 365 m (1 200 ft) with RG 62 A/U coaxial cable • 365 m (1 200 ft) with 2-core twisted pair, foil shield, 0.5 mm^2 (20 AWG), PVC sheath, only for MultiRanger 100/200
Options	
Flange version	Factory flange with PTFE face for ASME, EN or JIS configuration
Submergence shield	For applications with flooding possible
Certificates and approvals	CE, RCM, KCC CSA Class I, Div. 2, Groups A, B, C, D, Class II, Div. 1 Groups E, F, G FM Class I, Zone 1, AEx m IIC, T6 Class II, III, Div. 1, Groups E, F, G T6 ATEX II 2GD / IECEx / INMETRO Ex mb IIC T6 Gb, Ex tb IIIC T85 °C Db

© Siemens 2020

Selection and ordering data

	Article No.
EchoMax XRS-5 Ultrasonic level transducer ↗	**7ML1106-**
Continuous, non-contact, 8 m (26 ft) range, for liquids and slurries.	■ ■ ■ ■ **0** **-** **0** ■
↗ Click on the Article No. for the online configuration in the PIA Life Cycle Portal.	
Process connection	
1" NPT [(Taper), ANSI/ASME B1.20.1]	**1**
R 1" [(BSPT), EN 10226]	**2**
Cable length	
5 m (16.40 ft)	**A**
10 m (32.81 ft)	**B**
30 m (98.43 ft)	**C**
Facing	
Standard (CSM rubber)	**A**
PTFE (flange versions)	**B**
Approvals	
CE, RCM, KCC, CSA Class I, Div. 2, Groups A, B, C, D, Class II, Div. 1, Groups E, F, G FM Class I, Zone 1, AEx m IIC, T6 Class II, III, Div. 1, Groups E, F, G T6 ATEX II 2GD/IECEx/ INMETRO Ex mb IIC T6 Gb, Ex tb IIIC T85 °C Db	**2**
Mounting flange (flush mount)	
None	**A**
3" ASME, 150 lb, flat faced	**B**
4" ASME, 150 lb, flat faced	**C**
6" ASME, 150 lb, flat faced	**D**
DN 80, PN 10/16, Type A, flat faced	**J**
DN 100, PN 10/16, Type A, flat faced	**K**
DN 150, PN 10/16, Type A, flat faced	**L**
JIS10K 3B style	**Q**
JIS10K 4B style	**R**
JIS10K 6B style	**S**
Note: flange bolting patterns and facings dimensionally correspond to the applicable ASME B16.5 or EN 1092-1, or JIS B 2220 standard.	

	Order code
Further designs	
Please add "**-Z**" to Article No. and specify Order code(s).	
Acrylic coated, stainless steel tag [13 x 45 mm (0.5 x 1.75 inch)]: Measuring-point number/identification (max. 16 characters) specify in plain text	**Y17**
Accessories	Article No.
Tag, stainless steel with hole, 12 x 45 mm (0.47 x 1.77 inch), one text line for fastening on sensors	**7ML1930-1BJ**
Submergence shield kit	**7ML1830-1BH**
Easy Aimer 2, aluminum, NPT with ¾" x 1" PVC coupling	**7ML1830-1AQ**
Easy Aimer 2, aluminum with M20 adapter and 1" and 1½" BSPT aluminum couplings	**7ML1830-1AX**
Easy Aimer 304, NPT with 1" stainless steel coupling	**7ML1830-1AU**
Easy Aimer 304, with M20 adapter and 1" and 1½" BSPT 304 stainless steel couplings	**7ML1830-1GN**
FMS-200 universal box bracket, mounting kit	**7ML1830-1BK**
FMS-210 channel bracket, wall mount	**7ML1830-1BL**
FMS-220 extended channel bracket, wall mount	**7ML1830-1BM**
FMS-310 channel bracket, floor mount	**7ML1830-1BN**
FMS-320 extended channel bracket, floor mount	**7ML1830-1BP**
FMS-350 bridge channel bracket, floor mount (see Mounting Brackets on page 4/186 for more information)	**7ML1830-1BQ**
1" NPT locknut, plastic	**7ML1830-1DS**
1" BSP locknut, plastic	**7ML1830-1DR**
1" BSP locknut, flanged, plastic	**7ML1830-1DN**
Plastic adapter 1" BSP - 20 mm	**7ML1830-1EA**
Plastic adapter 1" NPT	**7ML1930-1FX**
Plastic adapter 1" NPT/M20	**7ML1830-1EF**
Operating Instructions	
All literature is available to download for free, in a range of languages, at	

http://www.siemens.com/processinstrumentation/documentation

© Siemens 2020

Selection and ordering data

	Article No.
EchoMax XRS-5C Ultrasonic level transducer ↗	**7ML1105-**
Continuous, non-contact, 8 m (26 ft) range, for liquids and slurries.	■ ■ ■ ■ **1** - **0** ■
↗ Click on the Article No. for the online configuration in the PIA Life Cycle Portal.	
Process connection	
1" NPT [(Taper), ANSI/ASME B1.20.1]	**1**
Cable length	
5 m (16.40 ft)	**A**
10 m (32.81 ft)	**B**
30 m (98.43 ft)	**C**
Facing	
Standard (CSM rubber)	**A**
PTFE (flange versions)	**B**
Approvals	
CSA Class I Div. 1, Groups A, B, C, D; Class II Div. 1, Groups E, F, G; Class III	**1**
Mounting flange (flush mount)	
None	**A**
3" ASME, 150 lb, flat faced	**B**
4" ASME, 150 lb, flat faced	**C**
6" ASME, 150 lb, flat faced	**D**
Note: flange bolting patterns and facings dimensionally correspond to the applicable ASME B16.5 or EN 1092-1, or JIS B 2220 standard.	
Operating Instructions	
All literature is available to download for free, in a range of languages, at	
http://www.siemens.com/processinstrumentation/documentation	

	Order code
Further designs	
Please add "**-Z**" to Article No. and specify Order code(s).	
Acrylic coated, stainless steel tag [13 x 45 mm (0.5 x 1.75 inch)]: Measuring-point number/identification (max. 16 characters) specify in plain text	**Y17**
Accessories	Article No.
Submergence shield kit	**7ML1830-1BH**
Easy Aimer 2, aluminum, NPT with ¾" x 1" PVC coupling	**7ML1830-1AQ**
Easy Aimer 304, NPT with 1" stainless steel coupling	**7ML1830-1AU**
FMS-200 universal box bracket, mounting kit	**7ML1830-1BK**
FMS-210 channel bracket, wall mount	**7ML1830-1BL**
FMS-220 extended channel bracket, wall mount	**7ML1830-1BM**
FMS-310 channel bracket, floor mount	**7ML1830-1BN**
FMS-320 extended channel bracket, floor mount	**7ML1830-1BP**
FMS-350 bridge channel bracket, floor mount (see Mounting Brackets on page 4/186 for more information)	**7ML1830-1BQ**

© Siemens 2020

Dimensional drawings

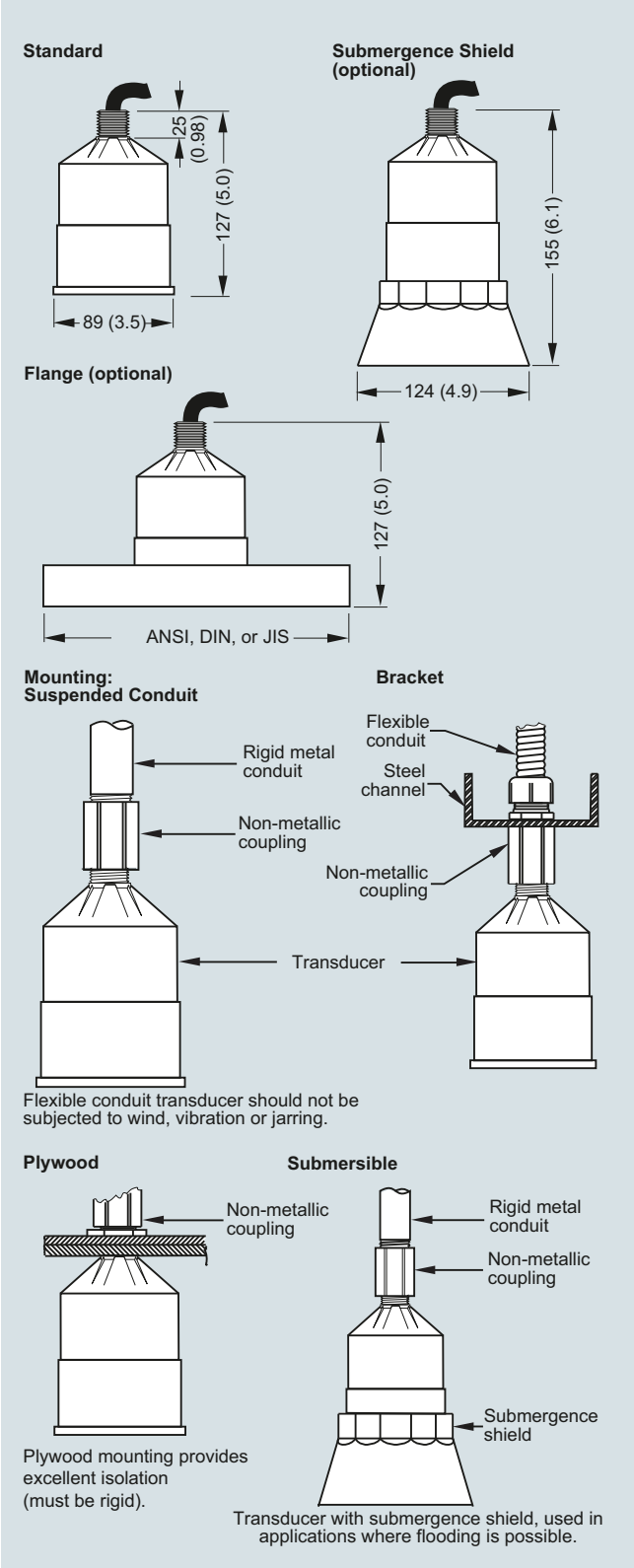

XRS-5 ultrasonic transducer, dimensions in mm (inch)

Circuit diagrams

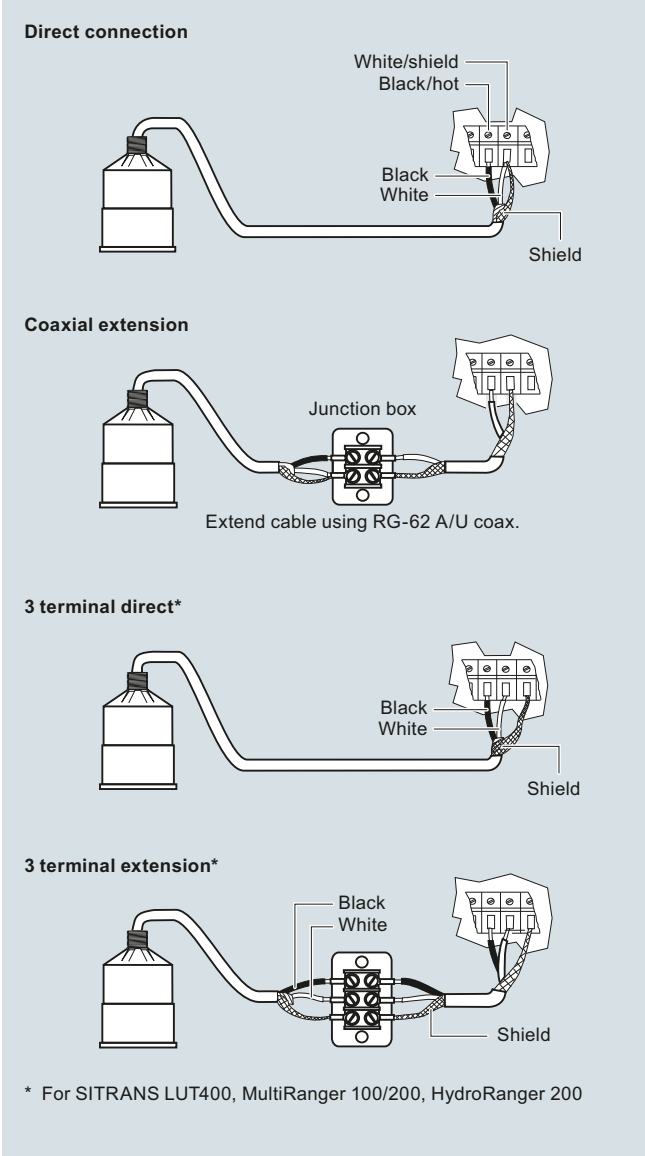

XRS-5 ultrasonic transducer connections

© Siemens 2020

EchoMax XPS

Overview

EchoMax XPS transducers use ultrasonic technology to measure level in a wide range of liquids and solids.

Benefits

- Integral temperature compensation
- Low ringing effect reduces blanking distance
- Optional foam facing for dusty applications
- Self-cleaning and low-maintenance
- Chemically resistant
- Hermetically sealed

Application

XPS transducers can be fully immersed, are resistant to steam and corrosive chemicals, and can be installed without flanges.

The XPS series offers versions for various measuring ranges up to 30 m (100 ft) and up to a max. temperature of 95 °C (203 °F).

During operation, the EchoMax transducers emit acoustic pulses in a narrow beam. The level monitor measures the propagation time between pulse emission and its reflection (echo) to calculate the distance.

© Siemens 2020

Technical specifications

Input	XPS-10	XPS-15 (standard and F models)	XPS-30
Measuring range[1)]	0.3 ... 10 m (1 ... 33 ft)	Standard: 0.3 ... 15 m (1 ... 50 ft) XPS-15F: 0.45 ... 15 m (1.5 ... 50 ft)	0.6 ... 30 m (2 ... 100 ft)
Output			
Frequency	44 kHz	44 kHz	30 kHz
Beam angle	12°	6°	6°
Environmental			
Location	Indoors/outdoors		
Ambient temperature	-40 ... +95 °C (-40 ... +203 °F)	Standard: -40 ... +95 °C (-40 ... +203 °F) XPS-15F: -20 ... +95 °C (-4 ... +203 °F)	-40 ... +95 °C (-40 ... +203 °F)
Storage temperature	-40 ... +95 °C (-40 ... +203 °F)	Standard: -40 ... +95 °C (-40 ... +203 °F) XPS-15F: -20 ... +95 °C (-4 ... +203 °F)	-40 ... +95 °C (-40 ... +203 °F)
Pollution degree	4		
Pressure	8 bar g (120 psi g) Flanged: 0.5 bar g (7.25 psi g)	8 bar g (120 psi g) Flanged: 0.5 bar g (7.25 psi g)	0.5 bar g (7.25 psi g) Flanged: 0.5 bar g (7.25 psi g)
Design			
Weight	0.8 kg (1.8 lb)	1.3 kg (2.8 lb) Flanged: 2 kg (4.4 lb)	4.3 kg (9.5 lb)
Power supply	Operation of transducer only with approved Siemens controllers		
Material	Standard: PVDF Flanged: PVDF with CPVC flange Option: PTFE face with CPVC flange	Standard: PVDF Flanged: PVDF with CPVC flange Option: PTFE face with CPVC flange	Standard: PVDF Flanged: PVDF with CPVC flange Option: PTFE face with CPVC flange
Color	Blue	Standard: Blue XPS-15F: Gray	Blue
Process connection	1" NPT or 1" BSPT	Standard: 1" NPT or 1" BSPT XPS-15F: 1" NPT	1.5" universal thread (NPT or BSPT)
Degree of protection	IP66/68	IP66/68	IP66/68
Cable	2-wire twisted pair/braided and foil shielded 0.5 mm^2 (20 AWG) PVC jacket		
Separation	Max. 365 m (1 200 ft)		
Certificates and approvals	Standard: CE, CSA, FM, ATEX, IECEx	Standard: CE, CSA, FM, ATEX, IECEx XPS-15F: FM Class I, Div. 1, Groups A, B, C, and D, Class II Div. 1, Groups E, F, and G, Class III	CE, CSA, FM, ATEX, IECEx

[1)] Max range is rated for measurement of liquids, recommended range for solids is 50 % of maximum. Application conditions such as extreme dust or angle of repose may reduce the usable maximum range. Consult a local sales person for more details.

© Siemens 2020

Selection and ordering data

	Article No.
EchoMax XPS-10 Ultrasonic level transducer ↗	**7ML1115-**
Continuous, non-contact, 10 m (32.80 ft), for liquids and solids.	■ ■ ■ ■ **0**
↗ Click on the Article No. for the online configuration in the PIA Life Cycle Portal.	
Mounting thread and facing	
1" NPT [(Taper), ANSI/ASME B1.20.1]	**0**
1" NPT [(Taper), ANSI/ASME B1.20.1] with foam facing[1)]	**1**
1" NPT [(Taper), ANSI/ASME B1.20.1] with PTFE facing[2)]	**2**
R 1" [(BSPT), EN 10226]	**3**
R 1" [(BSPT), EN 10226] with foam facing[1)]	**4**
R 1" [(BSPT), EN 10226] with PTFE facing[2)]	**5**
Cable length	
5 m (16.40 ft)	**B**
10 m (32.81 ft)	**C**
30 m (98.43 ft)	**E**
50 m (164.04 ft)	**F**
100 m (328.08 ft)	**K**
Mounting flange	
None	**A**
3" ASME, 150 lb, flat faced	**C**
4" ASME, 150 lb, flat faced	**D**
6" ASME, 150 lb, flat faced	**E**
8" ASME, 150 lb, flat faced	**F**
DN 80, PN 10/16, Type A, flat faced	**G**
DN 100, PN 10/16, Type A, flat faced	**J**
DN 150, PN 10/16, Type A, flat faced	**L**
JIS10K3B Style	**M**
JIS10K4B Style	**P**
JIS10K6B Style (Note: Flange bolting patterns and facings dimensionally correspond to the applicable ASME B16.5 or EN 1092-1, or JIS B 2220 standard.)	**R**
Approvals	
ATEX 2GD Ex mb IIC T4 Gb, Ex tb IIIC T135 °C Db; IECEx SIR 13.0009X Ex mb IIC T4 Gb, Ex tb IIIC T135 °C Db; FM Class I, Div. 2, Groups A, B, C, D; Class II, Div. 1, Groups E, F, G; Class III	**3**
CSA Class I, Div. 1, Groups A, B, C, D, Class II, Div. 1, Groups E, F, G, Class III [3)]	**4**

[1)] Not available with flanged versions.
[2)] Available with flanged versions only.
[3)] Valid with mounting thread and facing options 0 ... 2 only.

	Order code
Further designs	
Please add "**-Z**" to Article No. and specify Order code(s).	
Stainless steel tag [69 x 50 mm (2.71 x 1.97 inch)]: Measuring point number/identification (max. 27 characters) specify in plain text	**Y15**
Operating Instructions	
All literature is available to download for free, in a range of languages, at	
http://www.siemens.com/processinstrumentation/documentation	
Accessories	Article No.
Tag, stainless steel with hole, 12 x 45 mm (0.47 x 1.77 inch), one text line for fastening on sensors	**7ML1930-1BJ**
Submergence shield kit	**7ML1830-1BH**
Easy Aimer 2, aluminum, NPT with ¾" x 1" PVC coupling	**7ML1830-1AQ**
Easy Aimer 2, aluminum with M20 adapter and 1" and 1½" BSPT aluminum couplings	**7ML1830-1AX**
Easy Aimer 304, NPT with 1" stainless steel coupling	**7ML1830-1AU**
Easy Aimer 304, with M20 adapter and 1" and 1½" BSPT 304 stainless steel couplings	**7ML1830-1GN**
Universal box bracket, mounting kit	**7ML1830-1BK**
Channel bracket, wall mount	**7ML1830-1BL**
Extended channel bracket, wall mount	**7ML1830-1BM**
Channel bracket, floor mount	**7ML1830-1BN**
Extended channel bracket, floor mount	**7ML1830-1BP**
Bridge channel bracket, floor mount (see Mounting Brackets on page 4/186 for more information)	**7ML1830-1BQ**
1" NPT locknut, plastic	**7ML1830-1DS**
1" BSP locknut, plastic	**7ML1830-1DR**
1" BSP locknut, flanged, plastic	**7ML1830-1DN**
Plastic adapter 1" BSP - 20 mm	**7ML1830-1EA**
Plastic adapter 1" NPT	**7ML1930-1FX**
Plastic adapter 1" NPT/M20	**7ML1830-1EF**

© Siemens 2020

Selection and ordering data

	Article No.
EchoMax XPS-15 Ultrasonic level transducer ↗	**7ML1118-**
Continuous, non-contact, 15 m (49.21 ft), for liquids and solids.	■ ■ ■ ■ **0**
↗ Click on the Article No. for the online configuration in the PIA Life Cycle Portal.	
Mounting thread and facing	
1" NPT [(Taper), ANSI/ASME B1.20.1]	**0**
1" NPT [(Taper), ANSI/ASME B1.20.1] with foam facing[1)]	**1**
1" NPT [(Taper), ANSI/ASME B1.20.1] with PTFE facing[2)]	**2**
R 1" [(BSPT), EN 10226]	**3**
R 1" [(BSPT), EN 10226] with foam facing[1)]	**4**
R 1" [(BSPT), EN 10226] with PTFE facing[2)]	**5**
Cable length	
5 m (16.40 ft)	**B**
10 m (32.81 ft)	**C**
30 m (98.43 ft)	**E**
50 m (164.04 ft)	**F**
100 m (328.08 ft)	**K**
Mounting flange	
None	**A**
6" ASME, 150 lb, flat faced	**D**
8" ASME, 150 lb, flat faced	**E**
DN 150, PN 10/16, Type A, flat faced	**J**
DN 200, PN 10, Type A, flat faced	**K**
JIS10K 6B	**N**
JIS10K 8B	**P**
(Note: Flange bolting patterns and facings dimensionally correspond to the applicable ASME B16.5 or EN 1092-1, or JIS B 2220 standard.)	
Approvals	
ATEX 2GD Ex mb IIC T4 Gb, Ex tb IIIC T135 °C Db; IECEx SIR 13.0009X Ex mb IIC T4 Gb, Ex tb IIIC T135 °C Db; FM Class I, Div. 2, Groups A, B, C, D; Class II, Div. 1, Groups E, F, G; Class III	**3**
CSA Class I, Div. 1, Groups A, B, C, D, Class II, Div. 1, Groups E, F, G, Class III [3)]	**4**

[1)] Not available with flanged versions.

[2)] Available with flanged versions only.

[3)] Available with mounting options 0 ... 2 only.

	Order code
Further designs	
Please add "**-Z**" to Article No. and specify Order code(s).	
Stainless steel tag [69 x 50 mm (2.71 x 1.97 inch)]: Measuring point number/ identification (max. 27 characters) specify in plain text	**Y15**
Operating Instructions	
All literature is available to download for free, in a range of languages, at	
http://www.siemens.com/processinstrumentation/documentation	
Accessories	Article No.
Tag, stainless steel with hole, 12 x 45 mm (0.47 x 1.77 inch), one text line for fastening on sensors	**7ML1930-1BJ**
Submergence shield kit	**7ML1830-1BJ**
Universal box bracket, mounting kit	**7ML1830-1BK**
Channel bracket, wall mount	**7ML1830-1BL**
Extended channel bracket, wall mount	**7ML1830-1BM**
Channel bracket, floor mount	**7ML1830-1BN**
Extended channel bracket, floor mount	**7ML1830-1BP**
Bridge channel bracket, floor mount (see Mounting Brackets on page 4/186 for more information)	**7ML1830-1BQ**
1" NPT locknut, plastic	**7ML1830-1DS**
1" BSP locknut, plastic	**7ML1830-1DR**
1" BSP locknut, flanged, plastic	**7ML1830-1DN**
Easy Aimer 2, aluminum, NPT with ¾" x 1" PVC coupling	**7ML1830-1AQ**
Easy Aimer 2, aluminum with M20 adapter and 1" and 1½" BSPT aluminum couplings	**7ML1830-1AX**
Easy Aimer 304, NPT with 1" stainless steel coupling	**7ML1830-1AU**
Easy Aimer 304, with M20 adapter and 1" and 1½" BSPT 304 stainless steel couplings	**7ML1830-1GN**
Plastic adapter 1" BSP - 20 mm	**7ML1830-1EA**
Plastic adapter 1" NPT	**7ML1930-1FX**
Plastic adapter 1" NPT/M20	**7ML1830-1EF**

© Siemens 2020

Selection and ordering data

	Article No.
EchoMax XPS-15F Ultrasonic level transducer ↗	**7ML1171-**
Continuous, non-contact, 15 m (49.21 ft), for liquids and solids.	■ ■ ■ ■ **0**
↗ Click on the Article No. for the online configuration in the PIA Life Cycle Portal.	
Mounting thread and facing	
1" NPT [(Taper), ANSI/ASME B1.20.1]	**1**
Cable length	
5 m (16.40 ft)	**B**
10 m (32.81 ft)	**C**
30 m (98.43 ft)	**D**
50 m (164.04 ft)	**E**
100 m (328.08 ft)	**F**
Mounting flange, flush mount	
None	**A**
6" ASME, 150 lb, flat faced	**B**
8" ASME, 150 lb, flat faced (Note: Flange bolting patterns and facings dimensionally correspond to the applicable ASME B16.5, or EN 1092-1, or JIS B 2220 standard.)	**C**
Approvals	
FM Class I, Div. 1, Groups A, B, C, and D, Class II Div. 1, Groups E, F, and G, Class III	**1**

	Order code
Further designs	
Please add "**-Z**" to Article No. and specify Order code(s).	
Stainless steel tag [69 x 50 mm (2.71 x 1.97 inch)]: Measuring point number/ identification (max. 27 characters) specify in plain text	**Y15**
Operating Instructions	
All literature is available to download for free, in a range of languages, at	
http://www.siemens.com/processinstrumentation/documentation	
Accessories	Article No.
Tag, stainless steel with hole, 12 x 45 mm (0.47 x 1.77 inch), one text line for fastening on sensors	**7ML1930-1BJ**
Submergence shield kit	**7ML1830-1BJ**
Universal box bracket, mounting kit	**7ML1830-1BK**
Channel bracket, wall mount	**7ML1830-1BL**
Extended channel bracket, wall mount	**7ML1830-1BM**
Channel bracket, floor mount	**7ML1830-1BN**
Extended channel bracket, floor mount	**7ML1830-1BP**
Bridge channel bracket, floor mount (see Mounting Brackets on page 4/186 for more information)	**7ML1830-1BQ**
1" NPT locknut, plastic	**7ML1830-1DS**
Easy Aimer 2, aluminum, NPT with ¾" x 1" PVC coupling	**7ML1830-1AQ**
Easy Aimer 304, NPT with 1" stainless steel coupling	**7ML1830-1AU**

© Siemens 2020

Selection and ordering data

	Article No.
EchoMax XPS-30 Ultrasonic level transducer ↗	**7ML1123-**
Continuous, non-contact, 30 m (98.42 ft) for liquids and solids.	■ ■ ■ ■ **0**
↗ Click on the Article No. for the online configuration in the PIA Life Cycle Portal.	
Mounting thread and facing	
1½" universal thread	**0**
1½" universal thread, foam facing[1]	**1**
1½" universal thread, PTFE facing[2]	**2**
Cable length	
5 m (16.40 ft)	**B**
10 m (32.81 ft)	**C**
30 m (98.43 ft)	**E**
50 m (164.04 ft)	**F**
100 m (328.08 ft)	**K**
Mounting flange	
None	**A**
6" ASME, 150 lb, flat faced	**D**
8" ASME, 150 lb, flat faced	**E**
DN 150, PN 10/16, Type A, flat faced	**J**
DN 200, PN 10, Type A, flat faced	**K**
JIS10K 6B	**N**
JIS10K 8B	**P**
(Note: Flange bolting patterns and facings dimensionally correspond to the applicable ASME B16.5 or EN 1092-1, or JIS B 2220 standard.)	
Approvals	
ATEX 2G 1D Ex mb IIC T4 Gb, Ex ta IIIC T135 °C Da; IECEx SIR 13.0009X Ex mb IIC T4 Gb, Ex ta IIIC T135 °C Da	**5**

[1] Not available with flanged versions.

[2] Available with flanged versions only.

	Order code
Further designs	
Please add "**-Z**" to Article No. and specify Order code(s).	
Stainless steel tag [69 x 50 mm (2.71 x 1.97 inch)]: measuring-point number/identification (max. 27 characters) specify in plain text	**Y15**
Operating Instructions	
All literature is available to download for free, in a range of languages, at	
http://www.siemens.com/processinstrumentation/documentation	
Accessories	Article No.
Tag, stainless steel with hole, 12 x 45 mm (0.47 x 1.77 inch), one text line for fastening on sensors	**7ML1930-1BJ**
1½" BSPT locknut, plastic	**7ML1830-1DP**
Easy Aimer 2, aluminum, NPT with 1½" galvanized coupling	**7ML1830-1AN**
Easy Aimer 304, NPT with 1½" stainless steel coupling	**7ML1830-1AT**
Easy Aimer 2, aluminum with M20 adapter and 1" and 1½" BSPT aluminum couplings	**7ML1830-1AX**
Easy Aimer 304, with M20 adapter and 1" and 1½" BSPT 304 stainless steel couplings	**7ML1830-1GN**
Adapter 1½" BSP	**7ML1830-1EB**

© Siemens 2020

Selection and ordering data

	Article No.
EchoMax XPS-30C Ultrasonic level transducer ↗	**7ML1155-**
Continuous, non-contact, 30 m (98.42 ft) for liquids and solids.	■ ■ ■ ■ **1**
↗ Click on the Article No. for the online configuration in the PIA Life Cycle Portal.	
Mounting thread and facing	
1½" universal thread	**0**
1½" universal thread, foam facing[1]	**1**
1½" universal thread, PTFE facing[2]	**2**
Cable length	
5 m (16.40 ft)	**B**
10 m (32.81 ft)	**C**
30 m (98.43 ft)	**E**
50 m (164.04 ft)	**F**
100 m (328.08 ft)	**K**
Mounting flange	
None	**A**
6" ASME, 150 lb, flat faced	**D**
8" ASME, 150 lb, flat faced	**E**
DN 150, PN 10/16, Type A, flat faced	**J**
DN 200, PN 10, Type A, flat faced	**K**
JIS10K 6B	**N**
JIS10K 8B	**P**
(Note: Flange bolting patterns and facings dimensionally correspond to the applicable ASME B16.5 or EN 1092-1, or JIS B 2220 standard.)	
Approvals	
CSA, Class I, Div. 2, Groups A, B, C, D; Class II, Div. 1, Groups E, F, G; Class III	**4**

[1] Not available with flanged version.
[2] Available for flanged versions only.

	Order code
Further designs	
Please add "**-Z**" to Article No. and specify Order code(s).	
Stainless steel tag [69 mm x 50 mm (2.71 x 1.97 inch)]: Measuring-point number/identification (max. 27 characters) specify in plain text	**Y15**
Operating Instructions	
All literature is available to download for free, in a range of languages, at	
http://www.siemens.com/processinstrumentation/documentation	

Accessories	Article No.
Easy Aimer 2, aluminum, NPT with 1½" galvanized coupling	**7ML1830-1AN**
Easy Aimer 304, NPT with 1½" stainless steel coupling	**7ML1830-1AT**
1½" BSPT locknut, plastic	**7ML1830-1DP**
Adapter 1½" BSP	**7ML1830-1EB**

© Siemens 2020

Dimensional drawings

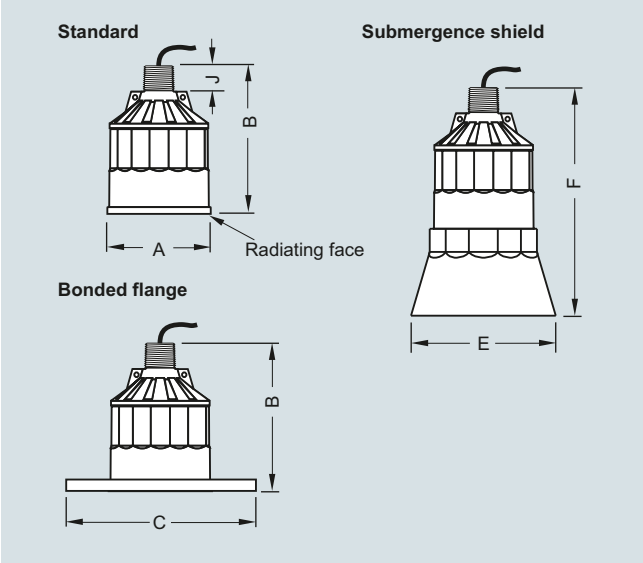

XPS ultrasonic transducer

Version			
Dimension	**XPS-10**	**XPS-15**	**XPS-30**
A	88 mm (3.464 inch)	121 mm (4.764 inch)	175 mm (6.890 inch)
B	122 mm (4.803 inch)	132 mm (5.197 inch)	198 mm (7.795 inch)
C	According to ASME, DIN, and JIS		
E	124 mm (4.882 inch)	158 mm (6.220 inch)	n/a
F	152 mm (5.984 inch)	198 mm (7.795 inch)	n/a
J	28 mm (1.1 inch)	28 mm (1.1 inch)	28 mm (1.1 inch)

Circuit diagrams

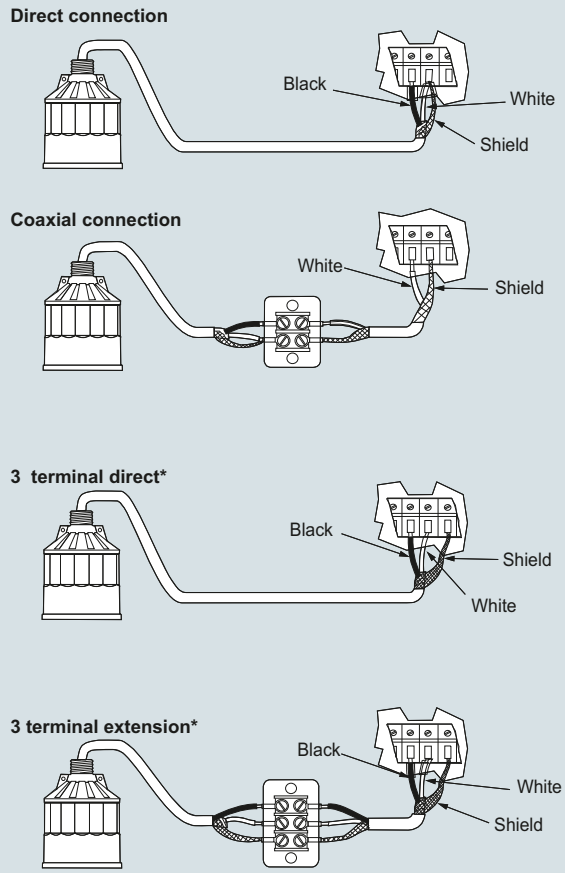

* For SITRANS LUT400, MultiRanger 100/200, HydroRanger 200

Mounting
Make particularly sure that the radiating face of the transducer is protected from damage. Mount the transducer so that it is above the maximum material level by at least the blanking value. On liquid applications, the transducer must be mounted so that the axis of transmission is perpendicular to the liquid surface. On solids applications, an Easy Aimer should be used to facilitate aiming the transducer. Consider the optional temperature sensor when mounting the transducer.

Interconnection
Do not route cable openly or near high voltage or current runs, contactors and SCR control drives. For optimum isolation against electrical noise, run cable separately in a grounded metal conduit. Seal all thread connections to prevent ingress of moisture.

XPS ultrasonic transducer connections

© Siemens 2020

EA aiming devices

Application

EA 304 aiming device

The Easy Aimer 304 flange is a stainless steel aiming device for alignment of Siemens level sensors used for level measurement of bulk solids.

The sensor must be mounted aimed towards the low level draw point in the silo. The sensor can be rotated through 360° and angled at 0 to 27° off vertical. It must be mounted using an access plate with welded studs or a flange in order to isolate the mounting holes from the pressurized environment. When installed properly, the EA 304 aiming device is capable of withstanding pressures up to 0.5 bar (Europe) or 15 psi (North America). It can even be used in corrosive and aggressive environments.

EA 2 aiming device

The Easy Aimer 2 flange is a cast aluminum aiming device for alignment of Siemens level sensors.

The flange has graduated adjustments and an adjustable insertion length. When used for applications with bulk solids, the sensor is mounted so that it is aimed towards the lower level draw point in the silo. The sensor can be rotated through 360° and angled at 0 to 20° off vertical. It must be mounted using an access plate with welded studs or a flange in order to isolate the mounting holes from the pressurized environment. When installed properly, the EA 2 aiming device is capable of withstanding pressures up to 0.5 bar (Europe) or 15 psi (North America). It can even be used in corrosive and aggressive environments.

Selection and ordering data

	Article No.
Easy aimer Used on solids applications to aim level sensors for optimal performance. Available in a 304 stainless steel model, or a cast aluminum model.	
Easy Aimer 2, aluminum with M20 adapter and 1" and 1½" BSPT aluminum couplings	**7ML1830-1AX**
Easy Aimer 304, with M20 adapter and 1" and 1½" BSPT 304 stainless steel couplings	**7ML1830-1GN**
Easy Aimer 2, aluminum, BSPT conduit	**7ML1830-1AL**
Easy Aimer 2, aluminum, NPT with 1½" galvanized coupling[1)]	**7ML1830-1AN**
Easy Aimer 2, aluminum, NPT with 1" galvanized coupling	**7ML1830-1AP**
Easy Aimer 2, aluminum, NPT with ¾" x 1" PVC coupling	**7ML1830-1AQ**
Easy Aimer 304, BSPT conduit	**7ML1830-1AS**
Easy Aimer 304, NPT with 1½" stainless steel coupling[1)]	**7ML1830-1AT**
Easy Aimer 304, NPT with 1" stainless steel coupling	**7ML1830-1AU**
Operating Instructions	
All literature is available to download for free, in a range of languages, at	

http://www.siemens.com/processinstrumentation/documentation

1) For use with XPS-30 transducers only.

© Siemens 2020

Dimensional drawings

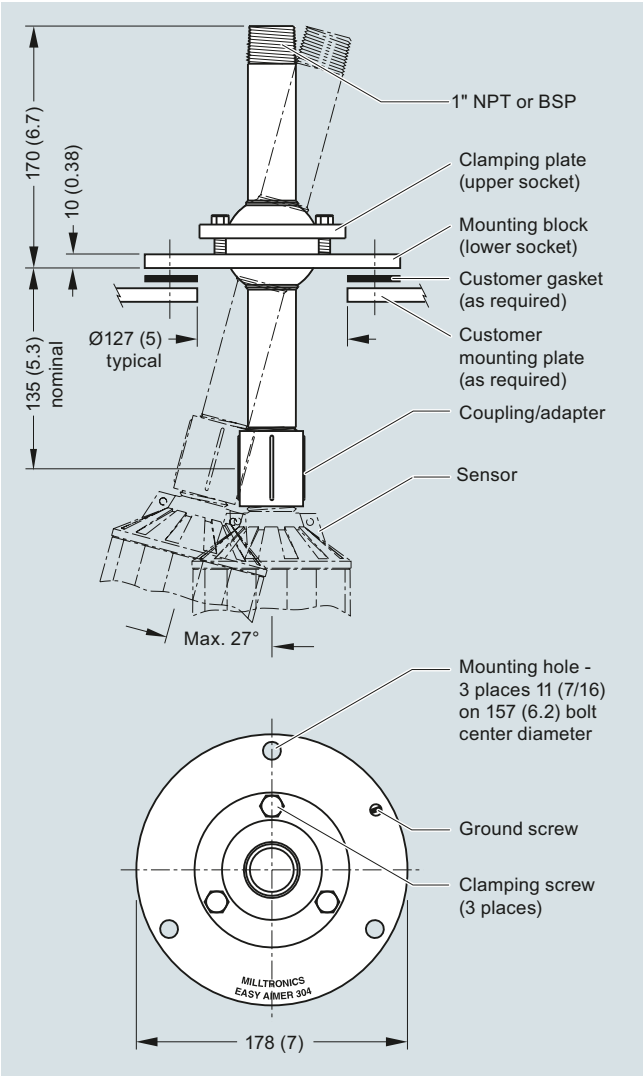

EA 304 aiming device, dimensions in mm (inch)

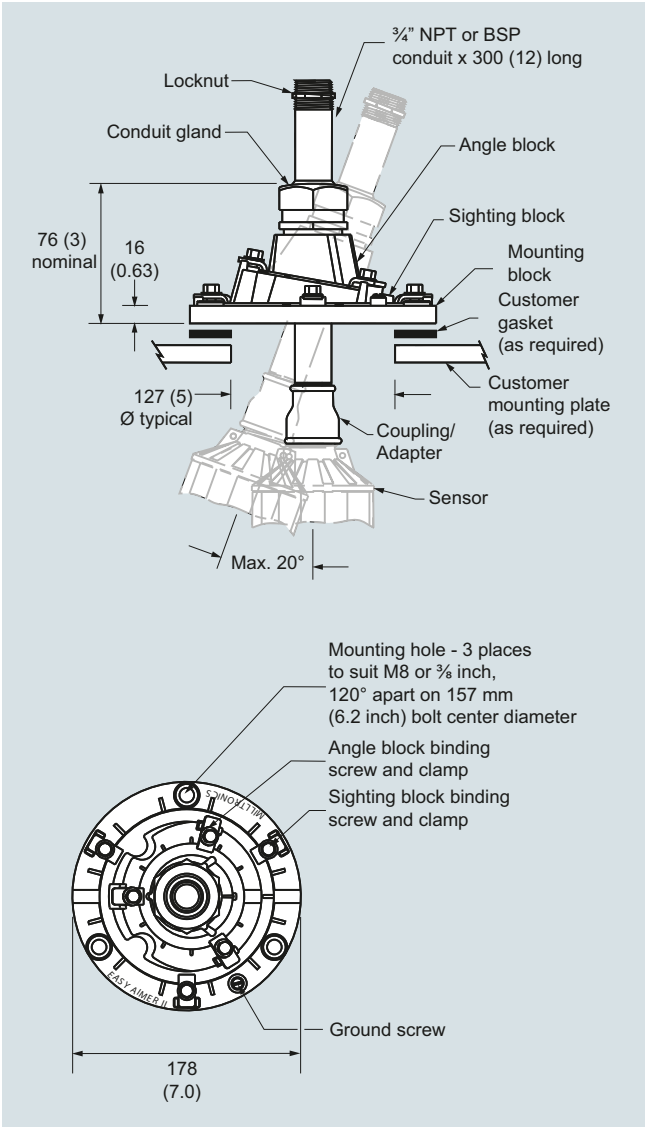

EA 2 aiming device, dimensions in mm (inch)

© Siemens 2020

FMS mounting brackets

Application

Siemens mounting brackets permit simple, fast installation of ultrasonic transducers. These rugged, high quality mounting brackets are constructed of 304 (1.4301) stainless steel and are suitable for use indoors and outdoors. They adjust to fit almost any application, saving you the time and expense of building custom brackets. Each kit includes all mounting parts.

FMS-200
universal box bracket system

Mounting of units with 1 inch or 2 inch threaded connection.

Distance from sensor to wall or beam: 20 ... 31 cm (8 ... 12 inch).

The unique box design also acts as a sun shield for transducers with 1 inch threaded connections.

FMS-210
wall mounting set

Mounting of transducers with 1 inch threaded connection.

Distance from transducer to wall or beam:
12 ... 48 cm (5 ... 19 inch).

FMS-220
extended wall mounting set

Mounting of transducers with 1 inch threaded connection.

Distance from transducer to wall or beam:
32 ... 98 cm (13 ... 39 inch).

FMS-310
floor mounting set

Mounting of transducers with 1 inch threaded connection.

Distance from transducer to floor: 20 ... 48 cm (8 ... 19 inch).

Distance from mounting support: 5 ... 57 cm (2 ... 22 inch).

FMS-320
extended floor mounting set

Mounting of transducers with 1 inch threaded connection.

Distance from transducer to floor: 20 ... 48 cm (8 ... 19 inch).

Distance from mounting support: 41 ... 108 cm (16 ... 43 inch).

FMS-350
floor mounting set, bridge

Mounting of transducers with 1 inch threaded connection.

Distance from transducer to floor: 20 ... 48 cm (8 ... 19 inch), anywhere along the complete width of the bridge [166 cm (65 inch)].

This kit is particularly suitable for measurements on open channels (OCM) by providing a very stable mount for the transducer above a flume or weir.

Integration

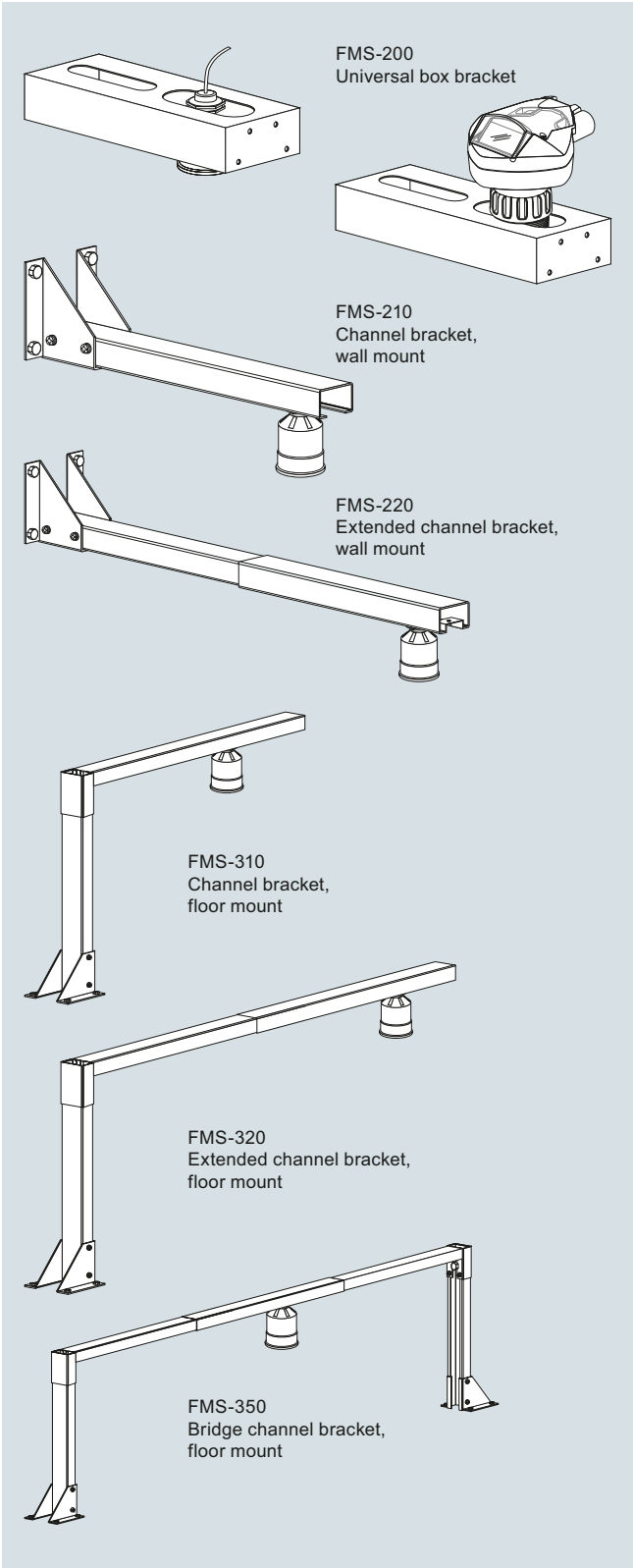

FMS mounting brackets

© Siemens 2020

Selection and ordering data	Article No.
Mounting brackets for XPS-10 sensors	
FMS-200 universal box bracket set	**7ML1830-1BK**
FMS-210 wall mounting set	**7ML1830-1BL**
FMS-220 extended wall mounting set	**7ML1830-1BM**
FMS-310 floor mounting set	**7ML1830-1BN**
FMS-320 extended floor mounting set	**7ML1830-1BP**
FMS-350 floor mounting set, bridge	**7ML1830-1BQ**
Additional Operating Instructions	
FMS-200	**7ML1998BK61**
FMS-210	**7ML19985BL61**
FMS-220	**7ML19985BM61**
FMS-310	**7ML19985BN61**
FMS-320	**7ML19985BP61**
FMS-350	**7ML19985BQ61**
Note: The Operating Instructions should be ordered as a separate line item on the order. All literature is available to download for free, in a range of languages, at	

http://www.siemens.com/processinstrumentation/documentation

© Siemens 2020

TS-3 temperature sensor

Overview

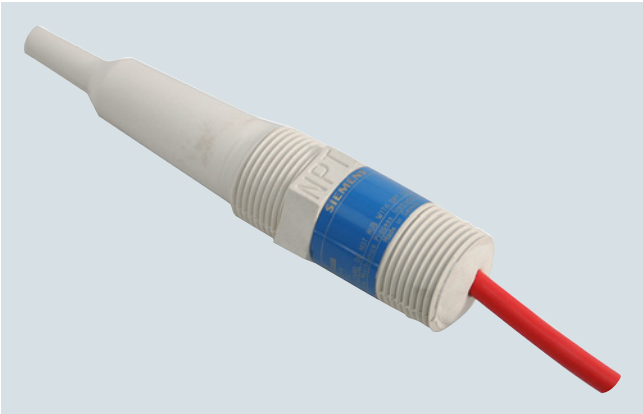

The TS-3 temperature sensor provides an input signal for temperature compensation of specific Siemens ultrasonic level controllers.

Benefits

- Chemically resistant ETFE enclosure
- Fast response time
- Approved for use in potentially explosive atmospheres

Application

Temperature compensation is essential in applications where temperature variations of the sound medium are expected.

By installing the temperature sensor close to the sound path of the associated ultrasonic transducer, a signal representative of the sound medium's ambient temperature is obtained. The temperature sensor should not be mounted in direct sunlight.

The TS-3 is used in conjunction with ultrasonic transducers that do not have an integral temperature sensor. It is also recommended in cases where the integral temperature sensor of the transducer cannot be used.

The following conditions are typical for use of the TS-3 sensor: where a fast reaction to temperature variations is required, where a flanged ultrasonic transducer is used, or where high temperatures are encountered.

The TS-3 is not compatible with devices using the TS-2 or LTS-1 temperature sensors. Refer to the associated controller manual for more details.

- Key Applications: for use in applications where temperature sensor measurement from transducer does not accurately represent vessel temperature. Used for applications requiring quick temperature response (open channel monitoring).

Design

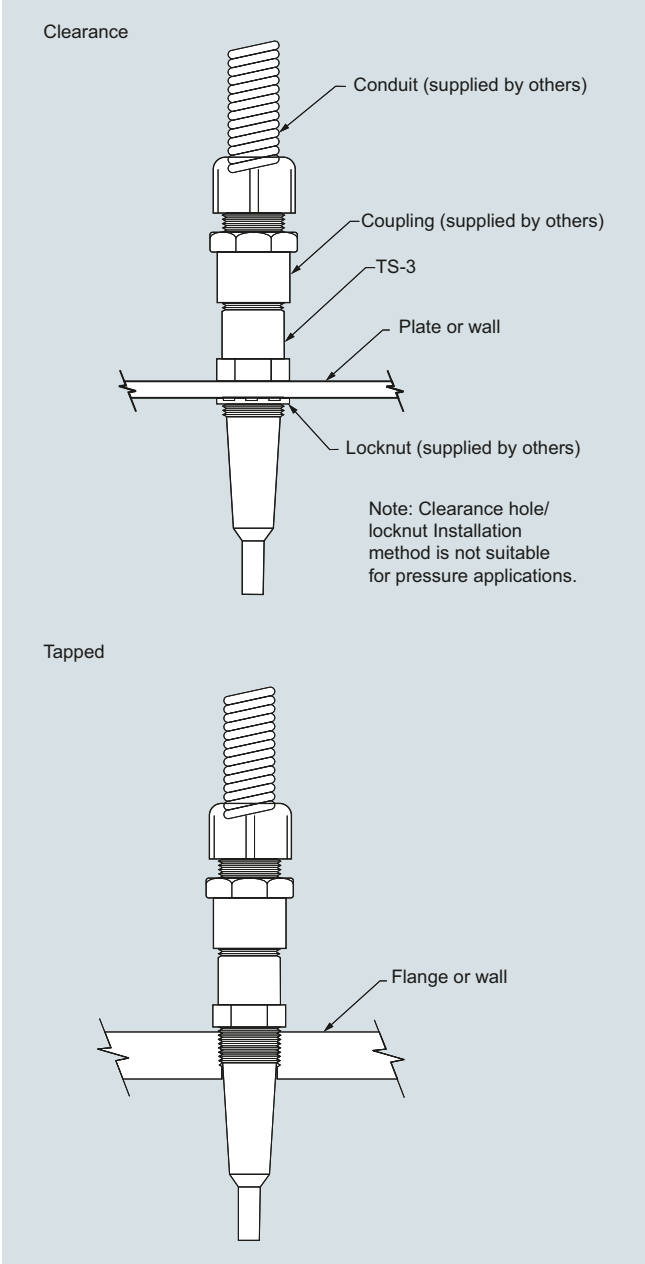

TS-3 temperature sensor

© Siemens 2020

Technical specifications

Mode of operation	
Measuring principle	Temperature sensor
Input	
Measuring range	-40 ... +100 °C (-40 ... +212 °F)
Output	
Response time	
• Forced circulation (temperature variation: 63 %)	55 s
• Flange, forced circulation	90 s
• Natural convection	150 s
Rated operating conditions	
Installation instructions	Mounted indoors/outdoors, but not exposed to direct sunlight
Pressure	Max. 4 bar (60 psi/400 kPa)
Design	
Material (enclosure)	ETFE[1)]
Cable connection	2-core, 0.5 mm² (20 AWG), shielded, silicone sheath
Process connection	¾" NPT [(Taper), ANSI/ASME B1.20.1] R ¾" [(BSPT), EN 10226], totally encapsulated
Certificates and approvals	CE, IEC Ex, FM, CSA, ATEX

1) ETFE is a fluoropolymer inert to most chemicals. For exposure to specific environments, check the chemical compatibility charts before installing the TS-3 in your application.

Dimensional drawings

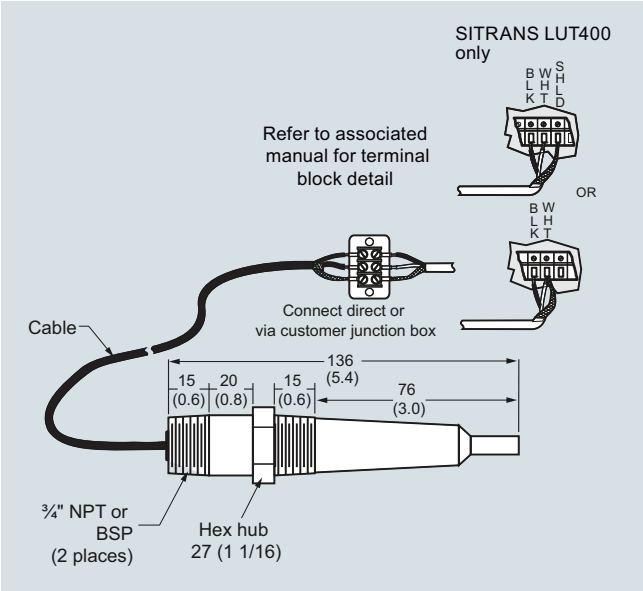

TS-3 temperature sensor, dimensions in mm (inch)

Selection and ordering data

	Article No.
TS-3 Temperature sensor ↗	**7ML1813-**
Continuous, non-contact, sensor for use with ultrasonic level controllers.	■ ■ **B** ■
↗ Click on the Article No. for the online configuration in the PIA Life Cycle Portal.	
Cable length	
1 m (3.28 ft)	**1**
5 m (16.40 ft)	**2**
10 m (32.81 ft)	**3**
30 m (98.43 ft)	**4**
50 m (164.04 ft)	**5**
70 m (229.66 ft)	**6**
90 m (295.28 ft)	**7**
Process connection	
¾" NPT [(Taper), ANSI/ASME B1.20.1]	**A**
R ¾" [(BSPT), EN 10226]	**B**
Approvals	
CSA, FM	**3**
CE, ATEX, IEC Ex	**4**
Operating Instructions	
All literature is available to download for free, in a range of languages, at	
http://www.siemens.com/processinstrumentation/documentation	
Accessories	
¾" NPT locknut, aluminum	**7ML1930-1BE**
Tag, stainless steel with hole, 12 x 45 mm (0.47 x 1.77 inch) for fastening on sensors	**7ML1930-1BJ**

© Siemens 2020

Overview

Radar measurement technology is non-contacting and low maintenance. Because microwaves require no carrier medium, they are virtually unaffected by the process atmosphere (vapor, pressure, dust, or temperature extremes). Siemens offers a variety of models to meet the specific needs of your application.

SITRANS Probe LR is a 2-wire, 6 GHz pulse radar level transmitter for continuous monitoring of liquids and slurries in storage vessels with nominal pressure and temperature, to a range of 20 m (66 ft).

SITRANS LR100 is a 2 wire loop powered radar transmitter for continuous level measurement of liquids and slurries to a range of 8 m (26 ft).

SITRANS LR110 is a compact radar transmitter for continuous level measurement of liquids, slurries, and solids to a range of 15 m (49.2 ft).

SITRANS LR120 is a compact radar transmitter for continuous level measurement of liquids and solids to a range of 30 m (98.4 ft).

SITRANS LR140 is a 2 wire loop powered radar transmitter for continuous level measurement of liquids and slurries to a range of 8 m (26 ft).

SITRANS LR150 is a compact radar transmitter for continuous level measurement of liquids, slurries, and solids to a range of 15 m (49.2 ft), with optional HMI.

SITRANS LR200 is a 2-wire, 6 GHz pulse radar level transmitter for continuous monitoring of liquids and slurries in process vessels including high temperature, pressure, agitation, and turbulence, to a range of 20 m (65 ft).

SITRANS LR250 is a 2-wire, 25 GHz pulse radar level transmitter for continuous monitoring of liquids and slurries in storage and process vessels including high temperature and pressure, corrosive or aggressive materials, to a range of 20 m (66 ft). Ideal for small vessels and low dielectric media.

SITRANS LR460 is a 4-wire, 24 GHz FMCW radar level transmitter with extremely high signal to noise ratio and advanced signal processing for continuous monitoring of solids, up to 100 m (328 ft). It is ideal for measurement in extreme dust and high temperature applications.

SITRANS LR560 2-wire, 78 GHz FMCW radar level transmitter for continuous monitoring of solids and liquids, to a range of 100 m (328 ft). It is easy to install, plug and play, and there is virtually no maintenance.

Auto False-Echo Suppression

SITRANS LR instruments offer the unique advantage of Process Intelligence signal processing technology. This in-depth knowledge and experience is built into the software's advanced algorithms to provide intelligent processing of echo profiles. The result is repeatable, fast and reliable measurement.

A special feature of SITRANS radar devices is Auto False-Echo Suppression, an echo processing technique that automatically detects and suppresses false echoes from vessel obstructions. You can implement this feature using two parameters on the local interface or SIMATIC PDM communicating over HART or PROFIBUS PA.

Local display interface – graphically displays echo profiles and diagnostic information (available with LR200, LR250, and LR560)
Quick to configure – Quick Start Wizard via SIMATIC PDM guides you during setup

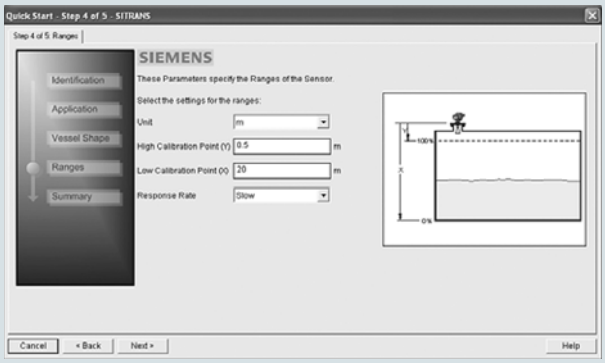

© Siemens 2020

Mode of operation

Principle of Operation

Radar measurement technology measures the time of flight from the transmitted signal to the return signal. From this time, distance measurement and level are determined.

Unlike ultrasonic measurement, radar technology does not require a carrier medium and travels at the speed of light (300 000 000 m/s). Most industrial radar devices operate from 6 to 78 GHz.

Siemens offers pulse radar transmitters (SITRANS Probe LR, SITRANS LR200, SITRANS LR250) and FMCW (Frequency Modulated Continuous Wave) radar transmitters (SITRANS LR100, SITRANS LR110, SITRANS LR120, SITRANS LR140, SITRANS LR150, SITRANS LR460, SITRANS LR560).

Pulse radar emits a microwave pulse from the antenna at a fixed repetition rate that reflects off the interface between the two materials with different dielectric constants (the atmosphere and the material being monitored).

The echo is detected by a receiver and the transmit time is used to calculate level.

Reflected echoes are digitally converted to an echo profile. The profile is analyzed to determine the distance from the material surface to the reference point on the instrument.

FMCW (Frequency Modulated Continuous Wave) radar devices send microwaves to the surface of the material. The wave frequency is modulated continuously. At the same time, the receiver is also receiving continuously and the difference in frequency between the transmitter and the receiver is directly proportional to the distance to the material.

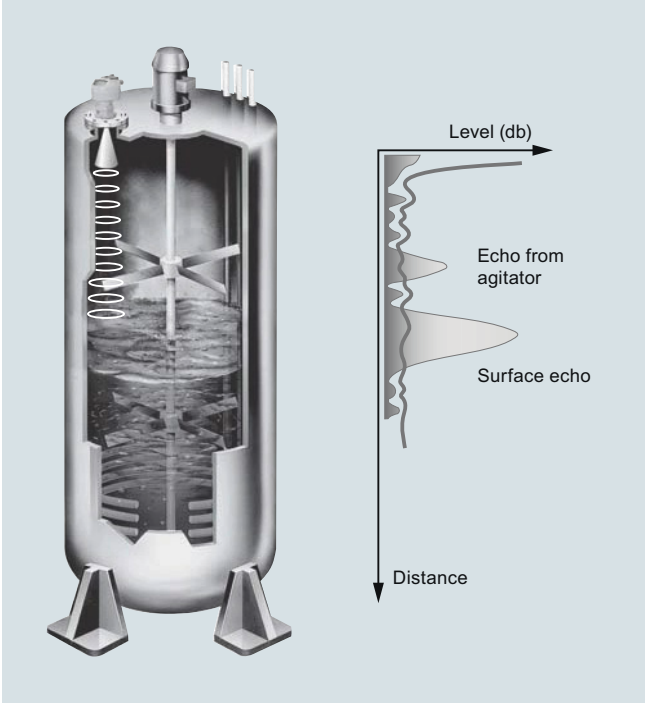

Radar operation in a reactor vessel

© Siemens 2020

Technical specifications

Radar Selection Guide

Criteria	SITRANS Probe LR	SITRANS LR200	SITRANS LR100	SITRANS LR110	SITRANS LR120
Typical industries	Chemicals, petrochemicals, water/waste-water, drilling mud	Chemicals, petrochemicals, aluminum, wastewater	Chemicals, petrochemicals, mining, food and beverage	Chemicals, petrochemicals, mining, food and beverage	Chemicals, petrochemicals, mining, food and beverage
Typical applications	Liquids, storage vessels, wet wells, drilling mud tanks	Liquids, process vessels with agitators, buildup, high temperatures	Liquid storage vessels, non-intrusively through plastic tanks, chemicals, aggregates	Liquid storage vessels, non-intrusively through plastic tanks, chemicals, aggregates	Liquid storage vessels, non-intrusively through plastic tanks, chemicals, aggregates
Range	0.3 ... 20 m (1 ... 65 ft)	0.4 ... 20 m (1.3 ... 65 ft)	0 ... 8 m (0 ... 26 ft)	0 ... 15 m (0 ... 49.2 ft)	0 ... 30 m (0 ... 98.4 ft)
Frequency	6.3 GHz	6.3 GHz	80 GHz nominal	80 GHz nominal	80 GHz nominal
Performance accuracy	0.1 % of range or 10 mm (0.4 inch)	0.1 % of range or 10 mm (0.4 inch)	± 5 mm	± 2 mm	± 2 mm
Temperature	Ambient: -40 ... +80 °C (-40 ... +176 °F) Process: -40 ... +80 °C (-40 ... +176 °F)	Ambient: -40 ... +80 °C (-40 ... +176 °F) Process: -40 ... +200 °C (-40 ... +392 °F), dependent on antenna type	Ambient: -40 ... +60 °C (-40 ... +140 °F) Process: -40 ... +60 °C (-40 ... +140 °F)	Ambient: -40 ... +80 °C (-40 ... +176 °F) Process: -40 ... +80 °C (-40 ... +176 °F)	Ambient: -40 ... +80 °C (-40 ... +176 °F) Process: -40 ... +80 °C (-40 ... +176 °F)
Output/ communications/ remote configuration and diagnostics	• 4 ... 20 mA/HART • SIMATIC PDM	• 4 20 mA/HART • PROFIBUS PA • SIMATIC PDM • AMS • SITRANS DTM/FDT for PACTware, Fieldcare, etc.	• 4 ... 20 mA • SITRANS mobile IQ	• 4 ... 20 mA/HART • Modbus RTU • SITRANS mobile IQ • SIMATIC PDM • AMS • SITRANS DTM/FDT for PACTware, Fieldcare	• 4 ... 20 mA/HART • Modbus RTU • SITRANS mobile IQ • SIMATIC PDM • AMS • SITRANS DTM/FDT for PACTware, Fieldcare
Power	• 24 V DC nominal • Loop powered	• 24 V DC nominal • Loop powered	• 12 ... 35 V DC • Loop powered	HART: • 12 ... 35 V DC • Loop powered Modbus: • 8 … 30 V DC • Loop powered	HART: • 12 ... 35 V DC • Loop powered Modbus: • 12 ... 35 V DC • Loop powered
Approvals	CE, RCM, Lloyds Register of Shipping, ABS,FCC, Industry Canada, RED ATEX,CSA, FM, INMETRO, EAC, IECEx, ANZEx, TIIS	CE, RCM, Lloyds Register of Shipping, ABS, FCC, Industry Canada, RED ATEX, CSA, FM, INMETRO, EAC, IECEx, ANZEx, TIIS, NEPSI	General Purpose CE, CSA, FM, RCM	Hazardous ATEX, IECEx, CE, CSA, FM, RCM	Hazardous ATEX, IECEx, CE, CSA, FM, RCM

© Siemens 2020

Technical specifications (continued)

Criteria	SITRANS LR140	SITRANS LR150	SITRANS LR250	SITRANS LR460	SITRANS LR560
Typical industries	Chemicals, petrochemicals, mining, food and beverage	Chemicals, petrochemicals, mining, food and beverage	Chemicals, petrochemicals, oil and gas, mining, marine, food and beverage, pharmaceutical	Cement, power generation, food processing, mineral processing, mining	Cement, chemical, power generation, grain, food processing, mineral processing, mining
Typical applications	Liquid storage vessels, non-intrusively through plastic tanks, chemicals, aggregates	Liquid storage vessels, non-intrusively through plastic tanks, chemicals, aggregates	Liquids, storage and process vessels with agitators, vaporous liquids, high temperatures, low dielectric media, crude oil produced water	Cement, fly ash, grain, coal, flour, plastics	Cement, fly ash, chemical fertilizer, grain, coal, flour, plastics, environmental water level monitoring
Range	8 m (26.2 ft)	15 m (49.2 ft)	50 mm (2 inch) from end of horn to 20 m (65 ft), horn dependent	100 m (328 ft)	40 m (131 ft) 100 m (328 ft)
Frequency	80 GHz nominal	80 GHz nominal	K-band (25.0 GHz)	24 ... 25 GHz FMCW	78 ... 79 GHz
Performance accuracy	5 mm	2 mm	≤ 3 mm (0.118 inch)	0.25 %	5 mm (0.2 inch)
Temperature	Ambient: -40 ... +60 °C (-40 ... +140 °F) Process: -40 ... +60 °C (-40 ... +140 °F)	Ambient: -40 ... +70 °C (-40 ...+158 °F) Process: -40 ... +80 °C (-40 ... +176 °F)	Ambient: -40 ... +80 °C (-40 ... +176 °F) Process: -40 ... +200 °C (-40 ... +392 °F), dependent on antenna type	Ambient: 65 °C (149 °F) Process: 200 °C (392 °F)	Ambient: -40 ... +80 °C (-40 ... +176 °F) Process: -40 ... +100 °C (-40 ... 212 °F) Optional: 200 °C (392 °F)
Output/ communications/ remote configuration and diagnostics	• 4 ... 20 mA • SITRANS mobile IQ	• 4 ... 20 mA/HART • SITRANS mobile IQ • SIMATIC PDM • AMS • SITRANS DTM/FDT for PACTware, Fieldcare	• 4 ... 20 mA/HART • PROFIBUS PA • FOUNDATION Fieldbus • SIMATIC PDM • AMS • SITRANS DTM/FDT for PACTware, Fieldcare, etc.	• 4 ... 20 mA/HART • PROFIBUS PA • SIMATIC PDM	• 4 ... 20 mA/HART • PROFIBUS PA • SIMATIC PDM • AMS • SITRANS DTM/FDT for PACTware, Fieldcare, etc.
Power	• 12 ... 35 V DC • Loop powered	HART: • 12 ... 35 V DC • Loop powered	• 24 V DC nominal • Loop powered	• 100 ... 230 V AC, ± 15 %, 50/60 Hz, 6 W • 24 V DC, +25/-20 %, 6 W	• 24 V DC nominal • Loop powered
Approvals	General purpose CE, CSA, FM, RCM	Hazardous ATEX, IECEx, CE, CSA, FM, RCM	CE, RCM, Lloyds Register of Shipping, ABS, BV, FCC, Industry Canada, RED ATEX, CSA, FM, INMETRO, EAC, IECEx, TIIS, NEPSI Functional safety SIL-2, EHEDG, 3-A, USP Class VI	CE, RCM, FCC, Industry Canada, RED ATEX, CSA, FM, INMETRO, IECEx, EAC	CE, RCM, FCC, Industry Canada, RED ATEX, CSA, FM, INMETRO, IECEx, NEPSI, EAC

© Siemens 2020

Overview

SITRANS Probe LR is a 2-wire, 6 GHz pulse radar level transmitter for continuous monitoring of liquids and slurries in storage vessels with nominal pressure and temperature, to a range of 20 m (66 ft).

Benefits

- Uni-Construction polypropylene rod antenna standard
- Easy installation and simple startup
- Programming using infrared Intrinsically Safe handheld programmer, SIMATIC PDM or HART handheld communicator
- Communication using HART
- Process Intelligence signal processing
- Auto False-Echo Suppression of false echoes

Application

The Probe LR is ideal for applications with chemical vapors, temperature gradients, vacuum or pressure, such as simple chemical storage or water treatment vessels. SITRANS Probe LR has a range of 0.3 to 20 m (1 to 65 ft).

Probe LR is designed for safe and simple programming using the Intrinsically Safe handheld programmer without having to open the instrument's lid. It has a standard Uni-Construction polypropylene rod antenna that offers excellent chemical resistance and is hermetically sealed. The Uni-Construction antenna includes an internal, integrated shield that eliminates vessel nozzle interference.

SITRANS Probe LR incorporates Process Intelligence signal processing. The Probe LR also has a high signal-to-noise ratio leading to improved reliability.

Startup is easy with as few as two parameters for basic operation. Programming is simple using SIMATIC PDM, HART handheld communicator or the Intrinsically Safe handheld programmer.

- Key Applications: chemical storage, wastewater wet well, and drilling mud

Configuration

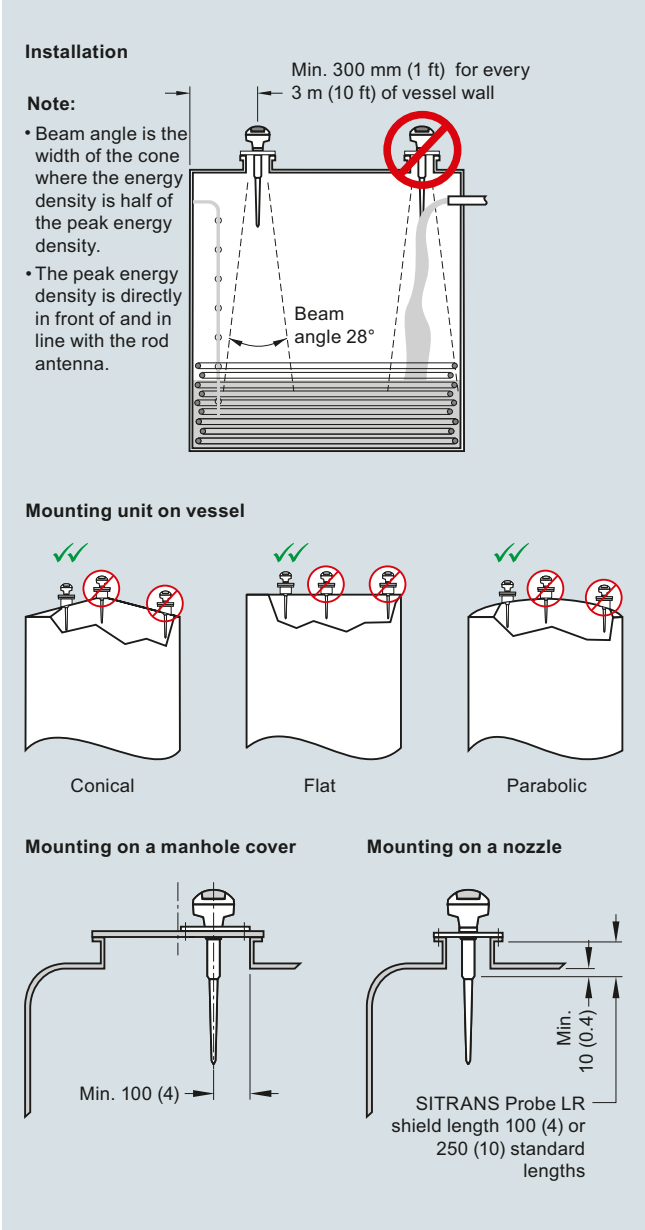

SITRANS Probe LR installation, dimensions in mm (inch)

© Siemens 2020

Technical specifications

Mode of operation	
Measuring principle	Pulse radar level measurement
Frequency	C-band, approx. 6 GHz
Measuring range	0.3 ... 20 m (1.0 ... 65 ft)
Output	
Analog output	4 ... 20 mA
Accuracy	± 0.02 mA
Span	Proportional or inversely proportional
Communications	HART
Performance (reference conditions)	
Accuracy	± the greater of 0.1 % of range or 10 mm (0.4 inch)
• From end of antenna to 600 mm (23.62 inch)	40 mm (1.57 inch)
• Remainder of range 10 mm (0.4 inch) or 0.1 % of span (whichever is greater)	10 mm (0.4 inch) or 0.1 % of span (whichever is greater)
Influence of ambient temperature	0.003 %/K
Repeatability	± 5 mm (2 inch)
Fail-safe	mA signal programmable as high, low or hold (LOE)
Rated operating conditions	
Installation conditions	
• Location	Indoor/outdoor
Ambient conditions (enclosure)	
• Ambient temperature	-40 ... +80 °C (-40 ... +176 °F)
• Storage temperature	-40 ... +80 °C (-40 ... +176 °F)
• Installation category	I
• Pollution degree	4
Medium conditions	
Dielectric constant ε_r	> 3.0
Vessel temperature	-40 ... +80 °C (-40 ... +176 °F)
Vessel pressure	3 bar g (43.5 psi g)
Design	
Enclosure	
• Body construction	PBT (Polybutylene Terephthalate)
• Lid construction	PEI (Polyether Imide)
• Cable inlet	2 x M20 x 1.5 or 2 x ½" NPT with adapter
Degree of protection	Type 4X/NEMA 4X, Type 6/NEMA 6, IP67, IP68
Weight	1.97 kg (4.35 lb)
Antenna	
• Material	Polypropylene rod, hermetically sealed construction
• Dimensions	Standard 100 mm (4 inch) shield for maximum 100 mm (4 inch) nozzle or optional 250 mm (10 inch) long shield
Process connections	1½" NPT [(Taper), ANSI/ASME B1.20.1] R 1½" [(BSPT), EN 10226] G 1½" [(BSPP), EN ISO 228-1]

Power supply	• Nominal 24 V DC with max. 550 Ω, maximum 30 V DC • 4 ... 20 mA
Certificates and approvals	
General	$CSA_{US/C}$, CE, FM, RCM
Marine	• Lloyd's Register of Shipping • ABS Type Approval
Radio	FCC, Industry Canada, RED, RCM
Hazardous	
• Intrinsically Safe (Brazil)	INMETRO Ex ia IIC T4 Ga
• Intrinsically Safe (Canada)	CSA Class I, Div. 1, Groups A, B, C, D; Class II, Div. 1, Group G; Class III
• Intrinsically Safe (Europe)	ATEX II 1G EEx ia IIC T4
• Intrinsically Safe (International)	IECEx Ex ia IIC T4
• Intrinsically Safe (Russia/Kazakhstan)	EAC Ex ia
• Intrinsically Safe (USA)	FM Class I, Div. 1, Groups A, B, C, D; Class II, Div. 1, Groups E, F, G; Class III
Programming	
Handheld programmer	HART communicator 375
PC	SIMATIC PDM
Intrinsically safe Siemens handheld programmer (optional)	Infrared receiver
• Approvals (handheld programmer)	ATEX II 1G EEx ia IIC T4 CSA and FM Class I, Div. 1, Groups A, B, C, D, T6 at max. ambient
Display (local)	Multi-segment alphanumeric liquid crystal with bar graph (representing level) available in four languages

© Siemens 2020

Selection and ordering data

	Article No.
SITRANS Probe LR Radar level transmitter ↗	**7ML5430-**
Continuous, non-contact, 20 m (66 ft) range, for liquids and slurries.	■ ■ ■ ■ **0**
↗ Click on the Article No. for the online configuration in the PIA Life Cycle Portal.	
Enclosure/Cable inlet	
Plastic, (PBT), 2 x ½" NPT	**1**
Plastic, (PBT), 2 x M20 x 1.5	**2**
Antenna type/Material - (max. 3 bar and 80 °C)	
Polypropylene antenna	
1½" NPT [(Taper), ANSI/ASME B1.20.1], comes with integral 100 mm shield	**A**
R 1½" [(BSPT), EN 10226], comes with integral 100 mm shield	**B**
G 1½" [(BSPP), EN ISO 228-1], comes with integral 100 mm shield	**C**
1½" NPT [(Taper), ANSI/ASME B1.20.1], comes with integral 250 mm shield	**D**
R 1½" [(BSPT), EN 10226], comes with integral 250 mm shield	**E**
G 1½" [(BSPP), EN ISO 228-1], comes with integral 250 mm shield	**F**
Approvals	
General Purpose, CE, RED, RCM	**A**
General Purpose, $CSA_{us/c}$, FM, FCC	**B**
CSA Class I, Div. 1, Groups A, B, C, D, Class II, Div. 1, Group G, Class III, FCC, Intrinsically Safe	**C**
FM, Class I, II and III, Div. 1, Groups A, B, C, D, E, F, G, FCC, Intrinsically Safe	**D**
IECEx Ex ia IIC T4; ATEX II 1G EEx ia IIC T4, RED, RCM, Intrinsically Safe; INMETRO Ex ia IIC T4 Ga; EAC	**E**
Communication/Output	
4 ... 20 mA, HART	**1**

	Order code
Further designs	
Please add "**-Z**" to Article No. and specify Order code(s).	
Stainless steel tag [69 x 50 mm (2.71 x 1.97 inch)]: Measuring-point number/identification (max. 27 characters) specify in plain text	**Y15**
Manufacturer's test certificate:M to DIN 55350, Part 18 and to ISO 9000	**C11**
Operating Instructions	
All literature is available to download for free, in a range of languages, at	
http://www.siemens.com/processinstrumentation/documentation	
Accessories	Article No.
Handheld programmer, Intrinsically Safe, ATEX II 1G, Ex ia	**7ML5830-2AH**
HART modem/USB (for use with a PC and SIMATIC PDM)	**7MF4997-1DB**
One metallic cable gland M20 x 1.5, rated -40 ... +80 °C (-40 ... +176 °F)	**7ML1930-1AP**
SITRANS RD100, loop powered display - see Chapter 7	**7ML5741-.....-.**
SITRANS RD150, remote digital display for 4 ... 20 mA and HART devices - see Chapter 7	**7ML5742-.....-....**
SITRANS RD200, universal input display with Modbus conversion - see Chapter 7	**7ML5740-.....-..**
SITRANS RD300, dual line display with totalizer and linearization curve and Modbus conversion - see Chapter 7	**7ML5744-.....-..**
For applicable back up point level switch - see point level measurement section	
Spare parts	
Plastic lid	**7ML1830-1KB**
For applicable back up point level switch - see point level measurement section	

© Siemens 2020

Dimensional drawings

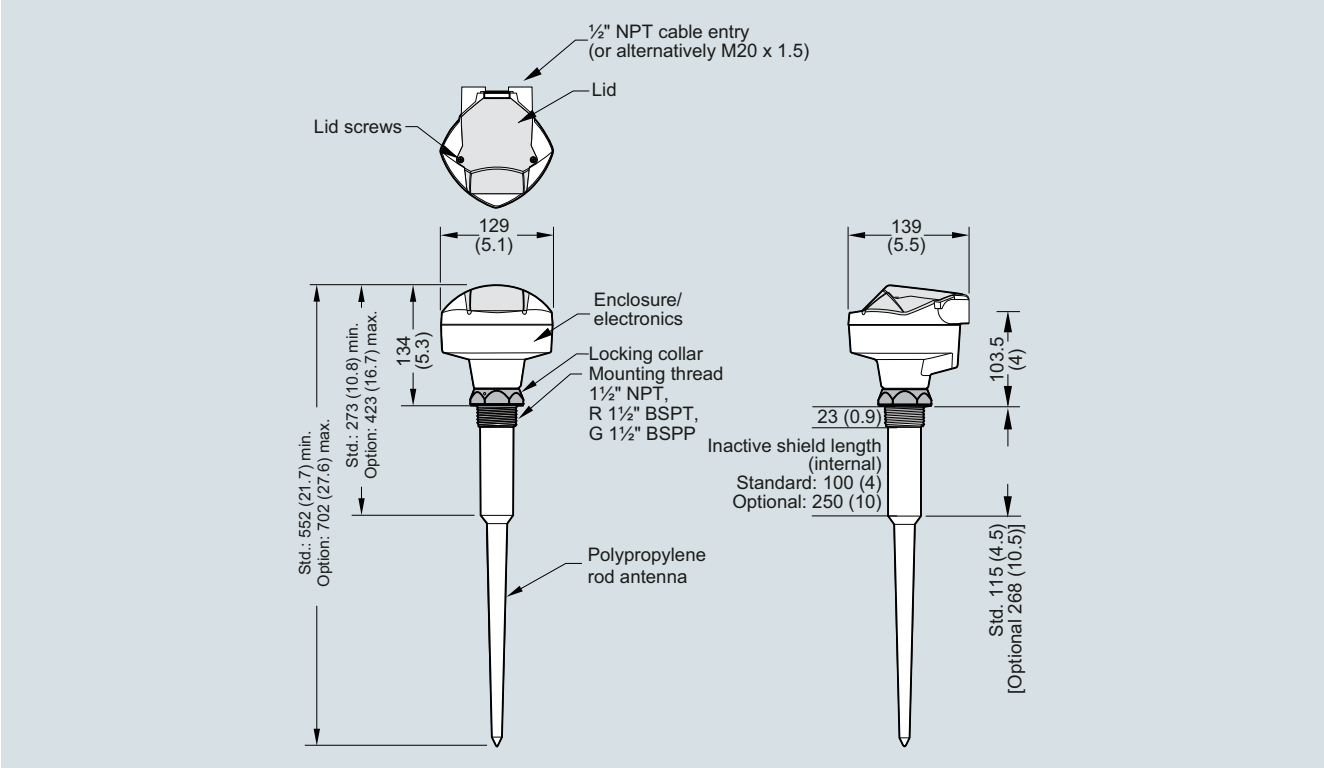

SITRANS Probe LR, dimensions in mm (inch)

Circuit diagrams

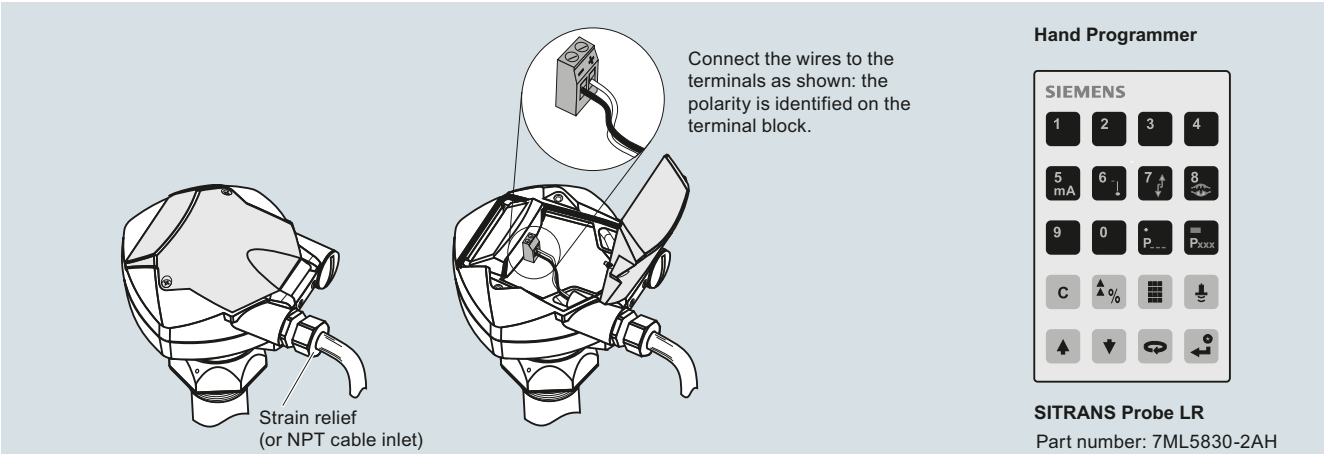

SITRANS Probe LR
Part number: 7ML5830-2AH

Notes:

- DC terminal shall be supplied from an SELV source in accordance with IEC-1010-1 Annex H.
- All field wiring must have insulation suitable for rated input voltages.
- Use shielded twisted pair cable (14-22 AWG).
- Separate cables and conduit may be required to conform to standard instrumentation wiring practices or electrical codes.

SITRANS Probe LR connections

© Siemens 2020

SITRANS LR100

Overview

SITRANS LR100 is a 2 wire loop powered radar transmitter for continuous level measurement of liquids and slurries to a range of 8 m (26 ft).

Benefits

- Bluetooth connectivity for easy setup with SITRANS mobile IQ
- Chemically resistant PVDF enclosure
- W band FMCW radar yields narrow beam with small antenna for superior performance in short range applications
- Approved for open air applications outside of a tank
- Compact design fits in limited space installations

Application

SITRANS LR100 is a W band FMCW radar level transmitter, packaged in a hermetically sealed PVDF enclosure for years of trouble-free reliable measurement service.

4 to 20 mA loop powered, it provides accurate level measurement to ranges of 8 m (26 ft). Measurement is possible non-intrusively through plastic vessel tops for easy installation. Programming is convenient using the Bluetooth connection and SITRANS mobile IQ application on your smart device.

Technical specifications

Mode of operation	
Measuring principle	W band FMCW radar
Measuring range	0 ... 8 m (0 ... 26 ft)
Frequency	80 GHz nominal
Beam angle	8°
Power Supply	
Voltage	12 ... 35 V DC
Current	4 ... 20 mA
Accuracy	± 5 mm
Rated operating conditions	
Vessel pressure	-1 ... +3 bar (14.50 ... 43.51 psi g)
Ambient temperature	-40 ... +60 °C (-40 ... +140 °F)
Process temperature	-40 ... +60 °C (-40 ... +140 °F)
Storage temperature	-40 ... +80 °C (-40 ... +176 °F)
Design	
Weight	0.5 kg (1.1 lb), plus 0.1 kg/m (0.2 lb/ft) cable length
Material (enclosure)	PVDF
Process connection	1-½" NPT, 1-½" BSPT, or 1-½" BSPP
Degree of protection	IP66/IP68
Cable connection	• 8 m (26 ft) long, 2 conductor, twisted with shield 18 AWG, PVC jacket • 1" NPT or 1" BSPT threaded connection
Certificates and approvals	Ordinary locations, CE, $_C$FM$_{US}$, $_C$CSA$_{US}$, RCM, FCC, Industry Canada
Programming	
SITRANS mobile IQ App	SITRANS mobile IQ is a Bluetooth app that provides an intuitive interface to quickly configure, set up and monitor SITRANS LR100 series. For more information: http://www.siemens.com/mobileIQ

© Siemens 2020

Selection and ordering data

	Article No.
SITRANS LR100 Radar level transmitter ↗	**7ML530**
Continuous, non-contact, 8 m (26 ft) range, for liquids and slurries, 8 m integrated cable connection	**7 - 1 B 7 0 6 - 0 A A 0**
↗ Click on the Article No. for the online configuration in the PIA Life Cycle Portal.	
Process connection	
1-½" NPT [(Taper), ASME B1.20.1]/electrical connection 1" NPT	**A**
R 1-½" [(BSPT), EN 10226]/electrical connection 1" BSPT	**B**
G 1-½" [(BSPP), EN ISO 228-1]/electrical connection 1" BSPT	**C**

Further designs	Order code
Please add "**-Z**" to Article No. and specify Order code(s).	
Tag (device parameter, max. 32 characters) plate stainless steel 304/1.4301	**Y15**
Operating Instructions	
All literature is available to download for free, in a range of languages, at	

http://www.siemens.com/processinstrumentation/documentation

Accessories	Article No.
Easy Aimer 2, aluminum, NPT with ¾" x 1" PVC coupling	**7ML1830-1AQ**
Easy Aimer 2, aluminum with M20 adapter and 1" and 1½" BSPT aluminum couplings	**7ML1830-1AX**
Easy Aimer 304, NPT with 1" stainless steel coupling	**7ML1830-1AU**
Easy Aimer 304, with M20 adapter and 1" and 1½" BSPT 304 stainless steel couplings	**7ML1830-1GN**
FMS-200 universal box bracket, mounting kit	**7ML1830-1BK**
FMS-210 channel bracket, wall mount	**7ML1830-1BL**
FMS-220 extended channel bracket, wall mount	**7ML1830-1BM**
FMS-310 channel bracket, floor mount	**7ML1830-1BN**
FMS-320 extended channel bracket, floor mount	**7ML1830-1BP**
FMS-350 bridge channel bracket, floor mount (see Mounting Brackets on page 4/186 for more information)	**7ML1830-1BQ**
1" NPT locknut, plastic	**7ML1830-1DS**
1" BSP locknut, plastic	**7ML1830-1DR**
Plastic adapter 1" BSP - 20 mm	**7ML1830-1EA**
Plastic adapter 1" NPT	**7ML1930-1FX**
Plastic adapter 1" NPT/M20	**7ML1830-1EF**
SIMATIC RTU3010C compact, remote data manager with alarming	**6NH3112-0BA00-0XX0**
SIMATIC RTU3030C compact, remote data manager with alarming	**6NH3112-3BA00-0XX0**
SITRANS RD100, loop powered display - see Chapter 7	**7ML5741-.....-.**
SITRANS RD150, remote digital display for 4 to 20 mA and HART devices - see Chapter 7	**7ML5742-.....-....**
SITRANS RD200, universal input display with Modbus conversion - see Chapter 7	**7ML5740-.....-..**
SITRANS RD300, dual line display with totalizer and linearization curve and Modbus conversion - see Chapter 7	**7ML5744-.....-..**
For applicable back up point level switch - see point level measurement section	

Dimensional drawings

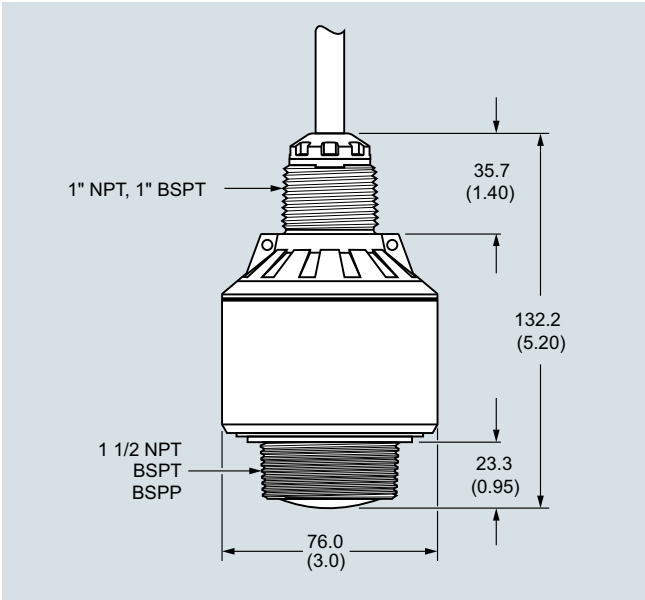

SITRANS LR100, dimensions in mm (inch)

Circuit diagrams

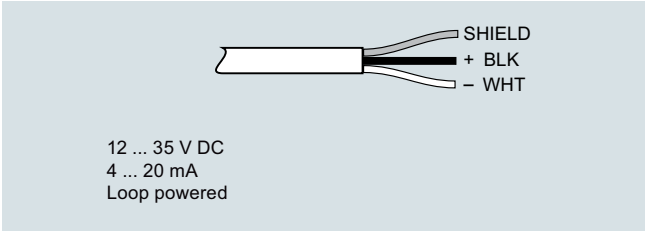

SITRANS LR100 connections

© Siemens 2020

Overview

SITRANS LR110 is a compact radar transmitter for continuous level measurement of liquids, slurries, or solids to a range of 15 m (49.2 ft).

Benefits

- Bluetooth connectivity for easy setup with SITRANS mobile IQ
- Chemically resistant PVDF enclosure
- HART 7.0 or Modbus RTU (in preparation) communication for intelligent integration into your application
- W band FMCW radar yields narrow beam with small antenna for superior performance in short range applications
- Approved for open air applications outside of a tank
- 2 mm accuracy and zero near range distance yields optimum inventory management capability
- Compact design fits in limited space installations
- Hazardous area variants available for safe use in explosive gas or dust environments.

Application

SITRANS LR110 is a W band FMCW radar level transmitter, packaged in a hermetically sealed PVDF enclosure for years of trouble-free reliable measurement service.

4 to 20 mA loop powered with HART [optional 4-wire Modbus RTU (in preparation)], providing accurate level measurement to ranges of 15 m (49.2 ft). Measurement is possible non-intrusively through plastic vessel tops for easy installation. Programming is convenient using the Bluetooth connection and SITRANS mobile IQ application on your smart device.

Technical specifications

Mode of operation	
Measuring principle	W band FMCW radar
Measuring range	0 ... 15 m (0 ... 49.2 ft)
Frequency	80 GHz nominal
Beam angle	8°
Power Supply	
HART	
• Voltage	12 ... 35 V DC
• Current	4 ... 20 mA
Modbus (in preparation)	
• Voltage	8 … 30 V DC
• Current	38 mA at 8 V DC/17 mA at 30 V DC
Communications	
4 ... 20 mA	HART 7.0
Modbus (4-wire option) (in preparation)	RTU
Accuracy	± 2 mm (range 0.25 ... 015 m), ± 10 mm (range 0 ... 0.25 m)
Rated operating conditions	
Vessel pressure	-1 ... +3 bar (14.50 ... 43.51 psi g)
Ambient temperature	-40 ... +80 °C (-40 ... +176 °F)
Process temperature	-40 ... +80 °C (-40 ... +176 °F)
Storage temperature	-40 ... +80 °C (-40 ... +176 °F)
Design	
Weight	0.5 kg (1.1 lb), plus 0.1 kg/m (0.2 lb/ft) cable length
Material (enclosure)	PVDF
Process connection	1-½" NPT, 1-½" BSPT or 1-½" BSPP
Degree of protection	IP66/IP68
Cable connection	1" NPT or 1" BSPT threaded connection
• HART	Length options: 5 ... 100 m (16.4 ... 328.1 ft), 2 conductor, twisted with shield 18 AWG, PVC jacket
• Modbus version (in preparation)	Length options: 5 ... 100 m (16.4 ... 328.1 ft), 4 conductor, twisted pairs, 22 AWG, polyurethane jacket
Certificates and approvals	CE, $_C$FM$_{US}$, $_C$CSA$_{US}$, ATEX, IECEx, RCM, FCC, Industry Canada, INMETRO, NEPSI, FDA/(EG)1935/2004
Programming	
SITRANS mobile IQ App	SITRANS mobile IQ is a Bluetooth app that provides an intuitive interface to quickly configure, set up and monitor SITRANS LR100 series. For more information: http://www.siemens.com/mobileIQ
SIMATIC PDM	SIMATIC PDM allows for remote PC configuration and diagnostics (for installation on a network).

© Siemens 2020

Selection and ordering data

	Article No.												
SITRANS LR110 Radar level transmitter ↗	**7ML531-**												
Continuous, non-contact, 15 m (49.2 ft) range, for liquids, slurries, or solids, integrated cable connection	■	-	■	■	■	0	6	-	0	-	A	0	
↗ Click on the Article No. for the online configuration in the PIA Life Cycle Portal.													
Communications													
HART (4 ... 20 mA)	0												
Bluetooth function													
Disabled			0										
Enabled			1										
Cable length													
5 m				A									
10 m				B									
30 m				C									
50 m				D									
100 m				E									
Process connection													
1-½" NPT [(Taper), ASME B1.20.1]/ electrical connection 1" NPT					A								
R 1-½" [(BSPT), EN 10226]/ electrical connection 1" BSPT					B								
G 1-½" [(BSPP), EN ISO 228-1]/electrical connection 1" BSPT					C								
Type of protection													
Non Ex (ordinary locations/Class I, Div. 1) CE, $_C$FM$_{US}$, $_C$CSA$_{US}$, RCM[2]										A			
Ex i (ia) (Gas Ex-Zone 0/Class 1, Div. 1) Dust Ex-Zone 20, 21, Class II & III Div. 1[1]										B			
Ex Zone 1, ½, Zone 21, 22, (Class I, Div. 2), Class II & III, Div. 2 via encapsulation [3]										G			

	Order code
Further designs	
Please add "**-Z**" to Article No. and specify Order code(s).	
Tag (device parameter, max. 32 characters) plate stainless steel 304/1.4301	**Y15**
$_C$FM$_{US}$, $_C$CSA$_{US}$, ATEX, IECEx	**E49**
INMETRO[4]	**E25**
NEPSI	**E27**
ATEX, IECEx	**E47**
WHG and Vlaren	**E61**
Operating Instructions	
All literature is available to download for free, in a range of languages, at	
http://www.siemens.com/processinstrumentation/documentation	

Accessories	Article No.
Easy Aimer 2, aluminum, NPT with ¾" x 1" PVC coupling	**7ML1830-1AQ**
Easy Aimer 2, aluminum with M20 adapter and 1" and 1½" BSPT aluminum couplings	**7ML1830-1AX**
Easy Aimer 304, NPT with 1" stainless steel coupling	**7ML1830-1AU**
Easy Aimer 304, with M20 adapter and 1" and 1½" BSPT 304 stainless steel couplings	**7ML1830-1GN**
FMS-200 universal box bracket, mounting kit	**7ML1830-1BK**
FMS-210 channel bracket, wall mount	**7ML1830-1BL**
FMS-220 extended channel bracket, wall mount	**7ML1830-1BM**
FMS-310 channel bracket, floor mount	**7ML1830-1BN**
FMS-320 extended channel bracket, floor mount	**7ML1830-1BP**
FMS-350 bridge channel bracket, floor mount (see Mounting Brackets on page 4/186 for more information)	**7ML1830-1BQ**
1" NPT locknut, plastic	**7ML1830-1DS**
1" BSP locknut, plastic	**7ML1830-1DR**
Plastic adapter 1" BSP - 20 mm	**7ML1830-1EA**
Plastic adapter 1" NPT	**7ML1930-1FX**
Plastic adapter 1" NPT/M20	**7ML1830-1EF**
SIMATIC RTU3010C compact, remote data manager with alarming	**6NH3112-0BA00-0XX0**
SIMATIC RTU3030C compact, remote data manager with alarming	**6NH3112-3BA00-0XX0**
Intrinsically Safe barrier	**7NG4124-1AA00**
SITRANS RD100, loop powered display - see Chapter 7	**7ML5741-.....-.**
SITRANS RD150, remote digital display for 4 to 20 mA and HART devices - see Chapter 7	**7ML5742-.....-....**
SITRANS RD200, universal input display with Modbus conversion - see Chapter 7	**7ML5740-.....-..**
SITRANS RD300, dual line display with totalizer and linearization curve and Modbus conversion - see Chapter 7	**7ML5744-.....-..**
For applicable back up point level switch - see point level measurement section	

[1] Must be ordered in combination with order codes E49, E25, E27, or E47.
[2] Cannot be ordered in combination with order codes E49, E25, E27, or E47.
[3] Available only with Order code E47.
[4] MASC approval is also included when ordered with Type of protection option G.

© Siemens 2020

Dimensional drawings

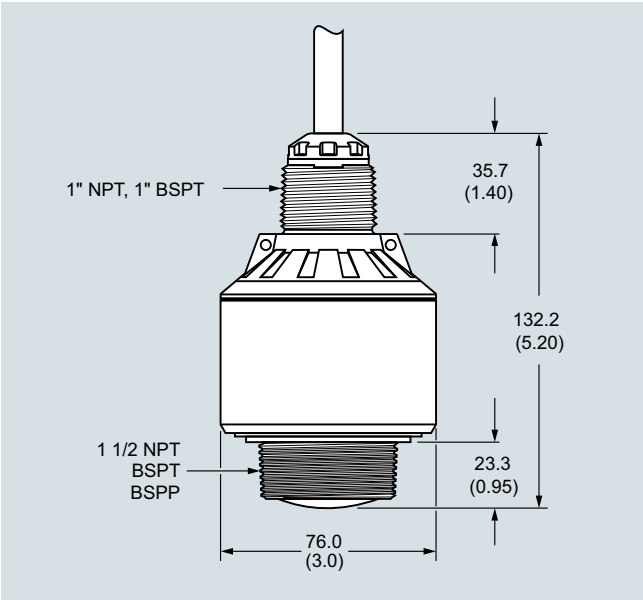

SITRANS LR110, dimensions in mm (inch)

Circuit diagrams

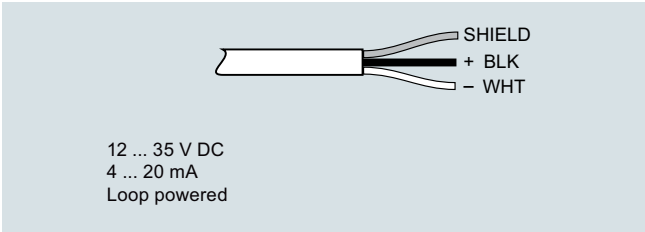

SITRANS LR120 Connections

© Siemens 2020

Overview

SITRANS LR120 is a compact radar transmitter for continuous level measurement of liquids and solids to a range of 30 m (98.4 ft).

Benefits

- Bluetooth connectivity for easy setup with SITRANS mobile IQ
- Chemically resistant PVDF enclosure
- HART 7.0 or Modbus RTU (in preparation) communication for intelligent integration into your application
- W band FMCW radar yields narrow beam with small antenna for superior performance in applications with obstructions
- Approved for open air applications outside of a tank
- 2 mm accuracy and zero near range distance yields optimum inventory management capability
- Submergence shield accessory prevents build up on sensor during flooding conditions
- Hazardous area variants available for safe use in explosive gas or dust environments

Application

SITRANS LR120 is a W band FMCW radar level transmitter, packaged in a hermetically sealed PVDF enclosure for years of trouble-free reliable measurement service.

4 to 20 mA loop powered with HART [optional 4-wire Modbus RTU (in preparation)], providing accurate level measurement to ranges of 30 m (98.4 ft). Its long range, narrow beam make LR120 suitable for wet wells with obstructions or solids level measurement, for example aggregates or plastic pellets. Programming is convenient using the Bluetooth connection and SITRANS mobile IQ application on your smart device.

Technical specifications

Mode of operation	
Measuring principle	W band FMCW radar
Measuring range	0 ... 30 m (0 ... 98.4 ft)
Frequency	80 GHz nominal
Beam angle	4°
Power Supply	
HART	
• Voltage	12 ... 35 V DC
• Current	4 ... 20 mA
Modbus (in preparation)	
• Voltage	8 … 30 V DC
• Current	38 mA at 8 V DC/17 mA at 30 V DC
Communications	
4 ... 20 mA	HART 7.0
Modbus (4-wire option) (in preparation)	RTU
Accuracy	± 2 mm (range 0.25 ... 30 m), ± 10 mm (range 0 ... 0.25 m)
Rated operating conditions	
Vessel pressure	-1 ... +3 bar (14.50 ... 43.51 psi g)
Ambient temperature	-40 ... +80 °C (-40 ... +176 °F)
Process temperature	-40 ... +80 °C (-40 ... +176 °F)
Storage temperature	-40 ... +80 °C (-40 ... +176 °F)
Design	
Weight	0.7 kg (1.5 lb), plus 0.1 kg/m (0.2 lb/ft) cable length
Material	
• Enclosure	PVDF
• Submergence shield	• Polypropylene • Silicone O-ring
Degree of protection	IP66/IP68
Cable connection	1" NPT or 1" BSPT threaded connection
• HART	Length options: 5 ... 100 m (16.4 ... 328.1 ft), 2 conductor, twisted with shield 18 AWG, PVC jacket
• Modbus version (in preparation)	Length options: 5 ... 100 m (16.4 ... 328.1 ft), 4 conductor, twisted pairs, 22 AWG, polyurethane jacket
Certificates and approvals	CE, $_C$FM$_{US}$, $_C$CSA$_{US}$, ATEX, IECEx, RCM, FCC, Industry Canada, INMETRO, NEPSI, FDA/(EG)1935/2004
Programming	
SITRANS mobile IQ app	SITRANS mobile IQ is a Bluetooth app that provides an intuitive interface to quickly configure, set up and monitor SITRANS LR100 series. For more information: http://www.siemens.com/mobileIQ
SIMATIC PDM	SIMATIC PDM allows for remote PC configuration and diagnostics (for installation on a network).

© Siemens 2020

Selection and ordering data

	Article No.
SITRANS LR120 Radar level transmitter ↗	**7ML532-**
Continuous, non-contact, 30 m (98.4 ft) range, for liquids, slurries, and solids, integrated cable connection	■ - ■ ■ A 0 6 - 0 ■ ■ 0
↗ Click on the Article No. for the online configuration in the PIA Life Cycle Portal.	
Communications	
HART (4 ... 20 mA)	0
Bluetooth function	
Disabled	0
Enabled	1
Cable length	
5 m	A
10 m	B
30 m	C
50 m	D
100 m	E
Type of protection	
Non Ex (ordinary locations) $_C$FM$_{US}$, $_C$CSA$_{US}$, CE, RCM[2]	A
Ex i (ia) (Gas Ex-Zone 0/Class I, Div. 1) Dust Ex-Zone 20, 21, Class II & III Div. 1[1]	B
Ex Zone 1, ½, 2, Zone 21, 22, via encapsulation[3]	G
Electrical connection of the cable entry	
1" BSPT	H
1" NPT	P

	Order code
Further designs	
Please add "**-Z**" to Article No. and specify Order code(s).	
Tag (device parameter, max. 32 characters) plate stainless steel 304/1.4301	**Y15**
$_C$FM$_{US}$, $_C$CSA$_{US}$, ATEX, IECEx	**E49**
INMETRO[4]	**E25**
NEPSI	**E27**
ATEX, IECEx	**E47**
WHG and Vlarem	**E61**
Operating Instructions	
All literature is available to download for free, in a range of languages, at	
http://www.siemens.com/processinstrumentation/documentation	

Accessories	Article No.
Submergence shield kit	**A5E49069764**
Easy Aimer 2, aluminum, NPT with ¾" x 1" PVC coupling	**7ML1830-1AQ**
Easy Aimer 2, aluminum with M20 adapter and 1" and 1½" BSPT aluminum couplings	**7ML1830-1AX**
Easy Aimer 304, NPT with 1" stainless steel coupling	**7ML1830-1AU**
Easy Aimer 304, with M20 adapter and 1" and 1½" BSPT 304 stainless steel couplings	**7ML1830-1GN**
FMS-200 universal box bracket, mounting kit	**7ML1830-1BK**
FMS-210 channel bracket, wall mount	**7ML1830-1BL**
FMS-220 extended channel bracket, wall mount	**7ML1830-1BM**
FMS-310 channel bracket, floor mount	**7ML1830-1BN**
FMS-320 extended channel bracket, floor mount	**7ML1830-1BP**
FMS-350 bridge channel bracket, floor mount (see Mounting Brackets on page 4/186 for more information)	**7ML1830-1BQ**
1" NPT locknut, plastic	**7ML1830-1DS**
1" BSP locknut, plastic	**7ML1830-1DR**
Plastic adapter 1" BSP - 20 mm	**7ML1830-1EA**
Plastic adapter 1" NPT	**7ML1930-1FX**
Plastic adapter 1" NPT/M20	**7ML1830-1EF**
SIMATIC RTU3010C compact, remote data manager with alarming	**6NH3112-0BA00-0XX0**
SIMATIC RTU3030C compact, remote data manager with alarming	**6NH3112-3BA00-0XX0**
Intrinsically Safe barrier	**7NG4124-1AA00**
SITRANS RD100, loop powered display - see Chapter 7	**7ML5741-.....-.**
SITRANS RD150, remote digital display for 4 to 20 mA and HART devices - see Chapter 7	**7ML5742-.....-....**
SITRANS RD200, universal input display with Modbus conversion - see Chapter 7	**7ML5740-.....-..**
SITRANS RD300, dual line display with totalizer and linearization curve and Modbus conversion - see Chapter 7	**7ML5744-.....-..**
For applicable back up point level switch - see point level measurement section	

1) Must be ordered in combination with order codes E49, E25, E27, or E47.
2) Not available in combination with order codes E49, E25, E27, or E47.
3) Available only with Order code E47.
4) MASC approval is also included when ordered with Type of protection option G.

© Siemens 2020

Dimensional drawings

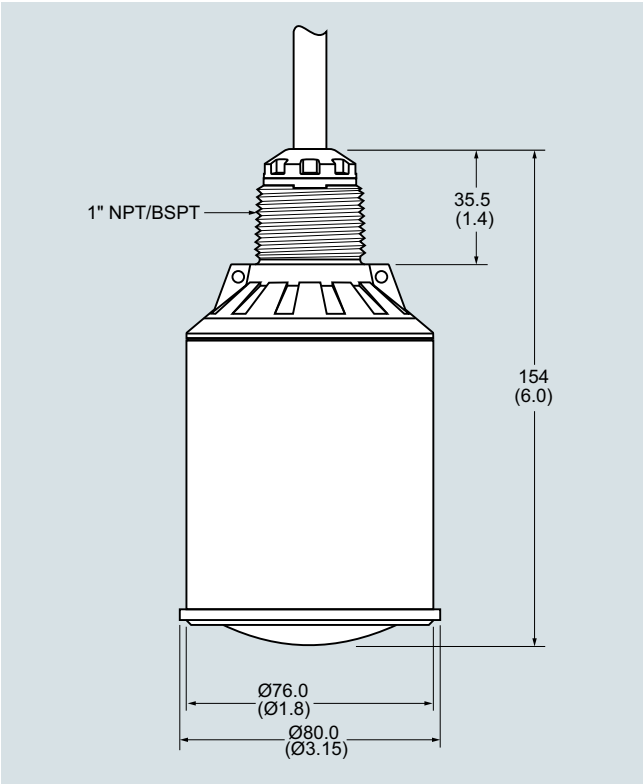

SITRANS LR120, dimensions in mm (inch)

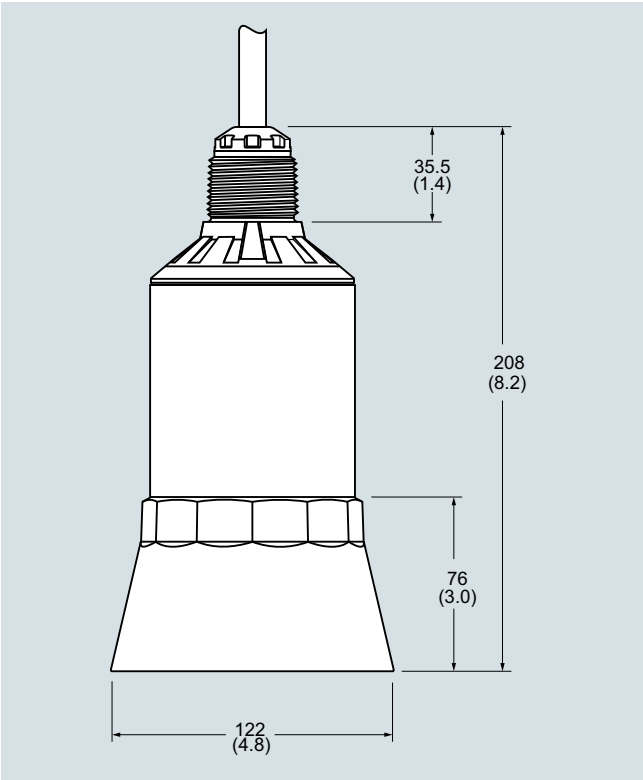

SITRANS LR120 Submergence shield accessory, dimensions in mm (inch)

Circuit diagrams

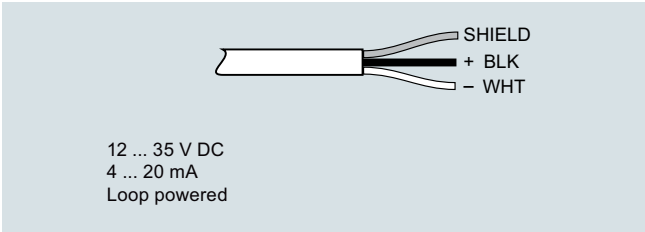

SITRANS LR120 Connections

© Siemens 2020

Overview

SITRANS LR140 is a 2 wire loop powered radar transmitter for continuous level measurement of liquids and slurries to a range of 8 m (26 ft).

Benefits

- Bluetooth connectivity for easy setup with SITRANS mobile IQ.
- Chemically resistant PVDF sensor.
- W band FMCW radar yields narrow beam with small antenna for superior performance in short range applications.
- Approved for open air applications outside of a tank.
- Compact design fits in limited space installations.

Application

SITRANS LR140 is a W band FMCW radar level transmitter, packaged in a chemically resistant enclosure with PVDF sensor for years of trouble-free reliable measurement service.

4 to 20 mA loop powered, it provides accurate level measurement to ranges of 8 m (26 ft). Measurement is possible, non-intrusively, through plastic vessel tops for easy installation. Programming is convenient using the Bluetooth connection and SITRANS mobile IQ application on your smart device.

Technical specifications

Mode of operation	
Measuring principle	W band FMCW radar
Measuring range	0 ... 8 m (0 ... 26 ft)
Frequency	80 GHz nominal
Beam angle	8°
Power Supply	
Voltage	12 ... 35 V DC
Current	4 ... 20 mA
Accuracy	± 5 mm
Rated operating conditions	
Vessel pressure	-1 ... +3 bar (14.50 ... 43.51 psi g)
Ambient temperature	-40 ... +60 °C (-40 ... +140 °F)
Process temperature	-40 ... +60 °C (-40 ... +140 °F)
Storage temperature	-40 ... +80 °C (-40 ... +176 °F)

Technical specifications (continued)

Design	
Weight	0.5 kg (1.1 lb), plus 0.1 kg/m (0.2 lb/ft) cable length
Material (sensor)	PVDF
Material (enclosure)	PBT
Process connection	1-½" NPT, 1-½" BSPT, or 1-½" BSPP
Degree of protection	IP66/IP67
Certificates and approvals	General Purpose, CE
Programming	
SITRANS mobile IQ App	SITRANS mobile IQ is a Bluetooth app that provides an intuitive interface to quickly configure, set up and monitor SITRANS LR100 series. For more information: http://www.siemens.com/mobileIQ

Selection and ordering data

	Article No.
SITRANS LR140 Radar level transmitter ↗ Non-contact, 8 m (26.2 ft) range, for liquids and solids.	**7ML533**
↗ Click on the Article No. for the online configuration in the PIA Life Cycle Portal.	**7 - 1 A ■ 0 7 - 4 A ■ 0**
Process connection	
1-½" NPT	**A**
R 1-½" (BSPT)	**B**
G 1-½" (BSPP)	**C**
Electrical connections/Cable entry	
M20	**F**
½" NPT	**K**
Further designs	Order code
Please add "**-Z**" to Article No. and specify Order code(s).	
Tag (device parameter, max. 32 characters) plate stainless steel 304/1.4301	**Y15**
Operating Instructions	
All literature is available to download for free, in a range of languages, at	

http://www.siemens.com/processinstrumentation/documentation

Accessories	Article No.
SIMATIC RTU3010C compact, remote data manager with alarming	**6NH3112-0BA00-0XX0**
SIMATIC RTU3030C compact, remote data manager with alarming	**6NH3112-3BA00-0XX0**
SITRANS RD100, loop powered display - see Chapter 7	**7ML5741-.....-.**
SITRANS RD150, remote digital display for 4 to 20 mA and HART devices - see Chapter 7	**7ML5742-.....-....**
SITRANS RD200, universal input display with Modbus conversion - see Chapter 7	**7ML5740-.....-..**
SITRANS RD300, dual line display with totalizer and linearization curve and Modbus conversion - see Chapter 7	**7ML5744-.....-..**
For applicable back up point level switch - see point level measurement section	

© Siemens 2020

Dimensional drawings

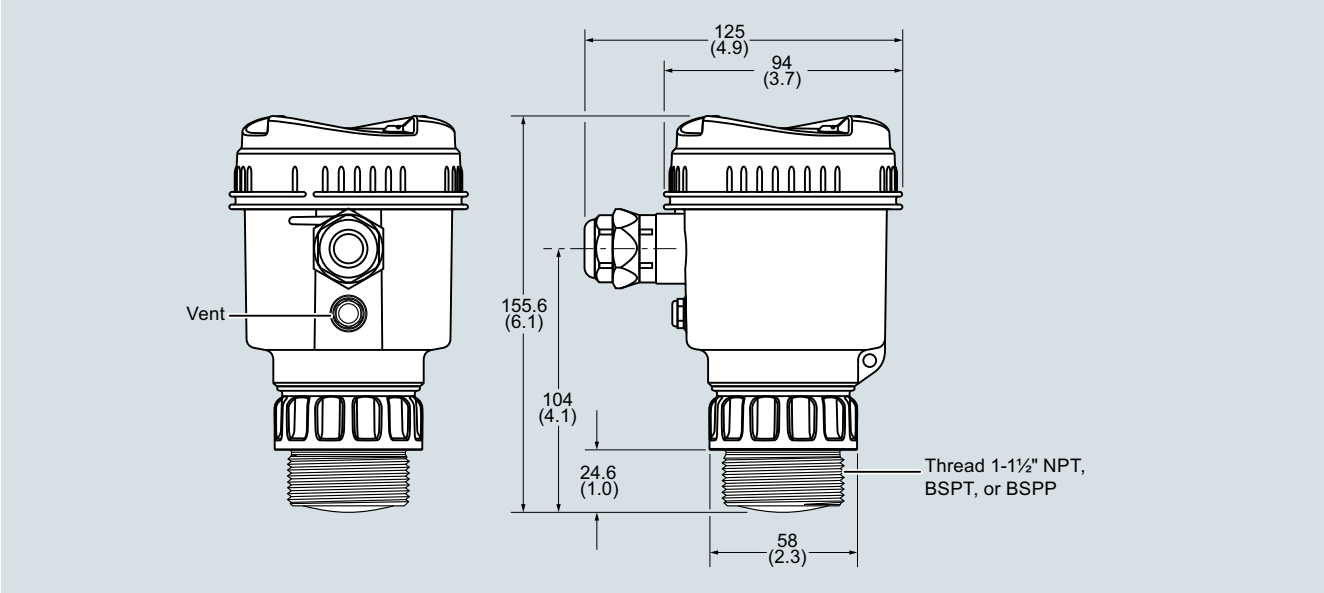

SITRANS LR140, dimensions in mm (inch)

Circuit diagrams

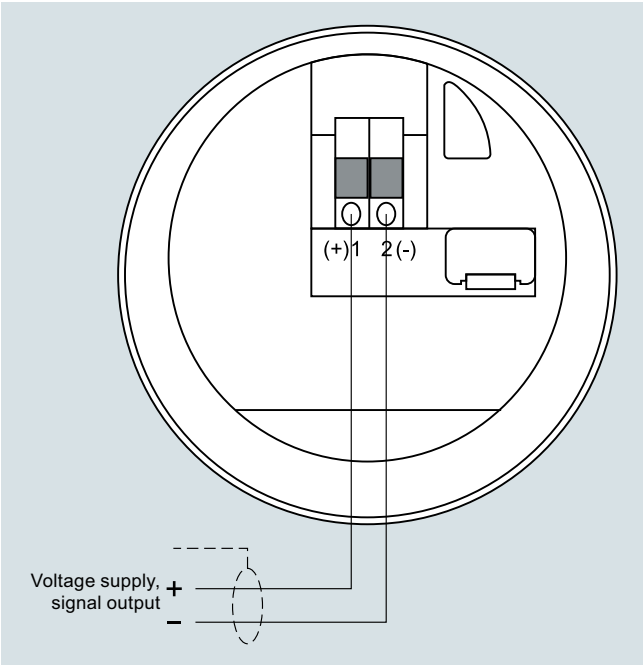

SITRANS LR140 connections

© Siemens 2020

Overview

SITRANS LR150 is a compact radar transmitter for continuous level measurement of liquids, slurries, and solids to a range of 15 m (49.2 ft).

Benefits

- Bluetooth connectivity for easy setup with SITRANS mobile IQ.
- Optional HMI with pushbutton programming and local diagnostic data.
- Chemically resistant PVDF sensor.
- HART 7.0 communication for intelligent integration into your application.
- W band FMCW radar yields narrow beam with small antenna for superior performance in short range applications.
- Approved for open air applications outside of a tank.
- 2 mm accuracy and zero near range distance yields optimum inventory management capability.
- Compact design fits in limited space installations.
- Hazardous area variants available for safe use in explosive gas or dust environments (pending).

Application

SITRANS LR150 is a W band FMCW radar level transmitter, with a chemically resistant PVDF sensor, for years of trouble-free, reliable measurement service.

4 to 20 mA loop powered with HART, providing accurate level measurement to ranges of 15 m (49.2 ft). Measurement is possible, non-intrusively, through plastic vessel tops for easy installation. Programming is convenient using the Bluetooth connection and SITRANS mobile IQ application on your smart device or locally with an optional HMI.

Technical specifications

Mode of operation	
Measuring principle	W band FMCW radar
Measuring range	0 ... 15 m (0 ... 49.2 ft)
Frequency	80 GHz nominal
Beam angle	8°
Power Supply	
HART	
• Voltage	12 ... 35 V DC
• Current	4 ... 20 mA
Communications	
4 ... 20 mA	HART 7.0
Accuracy	± 2 mm
Rated operating conditions	
Vessel pressure	-1 ... +3 bar (14.50 ... 43.51 psi g)
Ambient temperature	-40 ... +70 °C (-40 ... +158 °F)
Process temperature	-40 ... +70 °C (-40 ... +158 °F)
Storage temperature	-40 ... +80 °C (-40 ... +176 °F)
Design	
Weight	0.5 kg (1.1 lb)
Material (sensor)	PVDF
Material (enclosure)	PBT
Process connection	1-½" NPT, 1-½" BSPT or 1-½" BSPP
Degree of protection	IP66/IP67
Cable inlet	M20 or ½" NPT
Certificates and approvals	CE
Programming	
SITRANS mobile IQ App	SITRANS mobile IQ is a Bluetooth app that provides an intuitive interface to quickly configure, set up and monitor SITRANS LR100 series (available for Android, Apple and Windows devices). For more information: http://www.siemens.com/mobileIQ
Optional HMI	4 button with display of variables and diagnostic data
SIMATIC PDM	SIMATIC PDM allows for remote PC configuration and diagnostics (for installation on a network).

© Siemens 2020

Selection and ordering data

	Article No.											
SITRANS LR150 Radar level transmitter ↗	**7ML534**											
Non-contact, 15 m (49.2 ft) range, for liquids and solids.	**0**	**-**	■	**A**	■	**0**	**7**	**-**	**4**	■	■	■
↗ Click on the Article No. for the online configuration in the PIA Life Cycle Portal.												
Bluetooth function												
Disabled			**0**									
Enabled			**1**									
Process connection												
1-½" NPT					**A**							
R 1-½" (BSPT)					**B**							
G 1-½" (BSPP)					**C**							
Type of protection												
Non Ex (ordinary locations)										**A**		
Electrical connections/cable entry												
M20											**F**	
½" NPT											**K**	
Local HMI												
Without display (closed lid of PBT/PC material)												**0**
With display (closed lid of PBT/PC material)												**1**
With display (clear lid with plastic window of PC material)												**3**

	Order code
Further designs	
Please add "**-Z**" to Article No. and specify Order code(s).	
Tag (device parameter, max. 32 characters) plate stainless steel 304/1.4301	**Y15**
Operating Instructions	
All literature is available to download for free, in a range of languages, at	
http://www.siemens.com/processinstrumentation/documentation	
Accessories	Article No.
SIMATIC RTU3030C compact, remote data manager with alarming	**6NH3112-3BA00-0XX0**
Intrinsically Safe barrier	**7NG4124-1AA00**
SITRANS RD100, loop powered display - see Chapter 7	**7ML5741-.....-.**
SITRANS RD150, remote digital display for 4 to 20 mA and HART devices - see Chapter 7	**7ML5742-.....-....**
SITRANS RD200, universal input display with Modbus conversion - see Chapter 7	**7ML5740-.....-..**
SITRANS RD300, dual line display with totalizer and linearization curve and Modbus conversion- see Chapter 7	**7ML5744-.....-..**
For applicable back up point level switch -see point level measurement section	

© Siemens 2020

Dimensional drawings

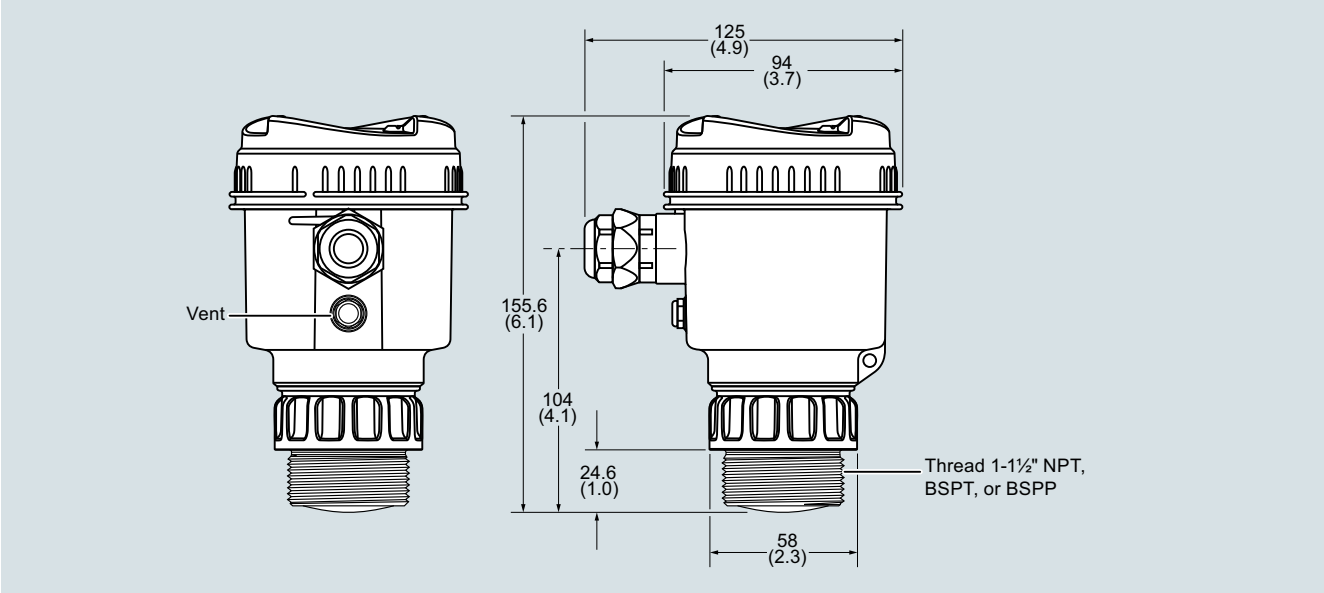

SITRANS LR150, dimensions in mm (inch)

Circuit diagrams

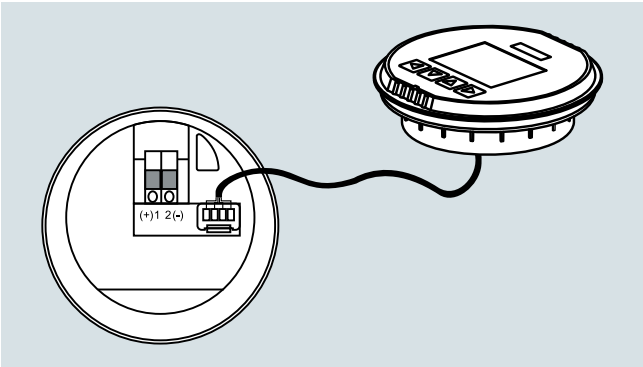

SITRANS LR150 connections

© Siemens 2020

Overview

SITRANS LR200 is a 2-wire, 6 GHz pulse radar level transmitter for continuous monitoring of liquids and slurries in process vessels including high temperature, pressure, agitation, and turbulence to a range of 20 m (65 ft).

Benefits

- Graphical local user interface (LUI) makes operation simple with plug-and-play setup using the intuitive Quick Start Wizard
- LUI displays echo profiles for diagnostic support
- Communication using HART or PROFIBUS PA
- Process Intelligence signal processing for improved measurement reliability and Auto False-Echo Suppression of fixed obstructions
- Programming using infrared Intrinsically Safe handheld programmer or SIMATIC PDM

Application

SITRANS LR200's unique design allows safe and simple programming using the Intrinsically Safe handheld programmer without having to open the instrument's lid. It also features a built-in alphanumeric display in four languages.

The SITRANS LR200 has a standard Uni-Construction polypropylene rod antenna that offers excellent chemical resistance and is hermetically sealed. The Uni-Construction antenna features an internal, integrated shield that eliminates vessel nozzle interference.

Startup is easy with as few as two parameters for basic operation. Installation is simplified as the electronics are mounted on a rotating head that swivels, allowing the instrument to line up with conduit or wiring connections or simply to adjust the position for easy viewing. SITRANS LR200 features Process Intelligence signal-processing technology for superior reliability.

- Key Applications: liquid process vessels with agitators, vaporous liquids, high temperatures, asphalt

Configuration

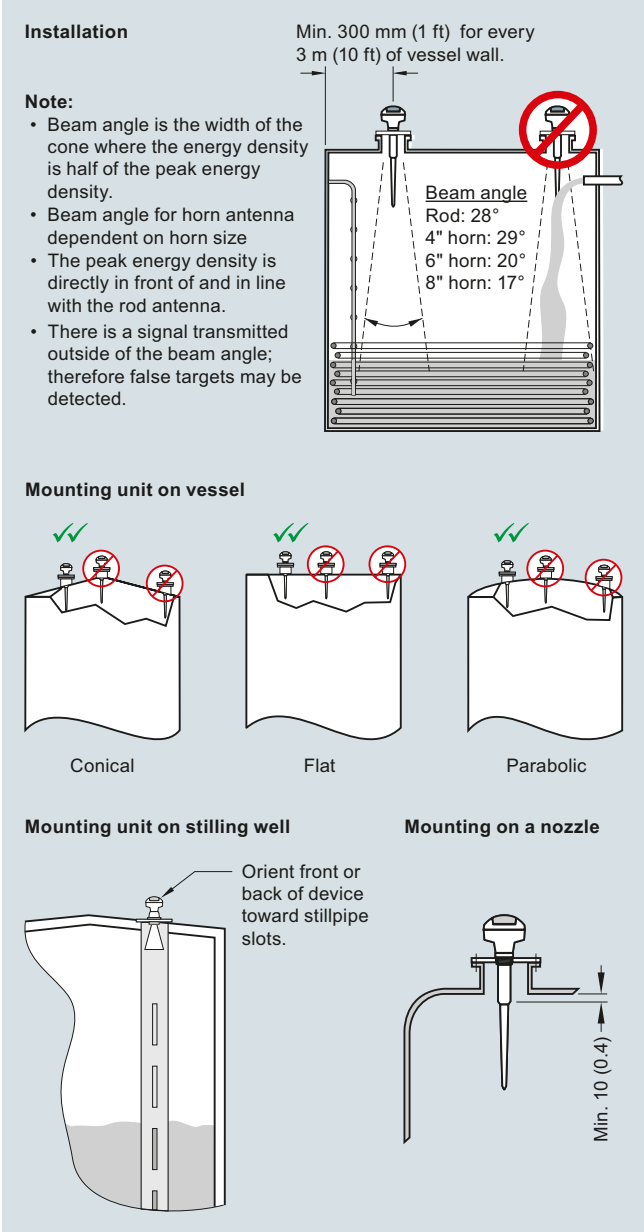

SITRANS LR200 installation, dimensions in mm (inch)

© Siemens 2020

Integration

SITRANS LR200 with flange adapter for connection to optional antennas.

Horn with waveguide extension. Used for high temperature isolation, long standpipes, and clearing tank obstructions.

Flat faced flange connection with PTFE rod antenna.

Shielded rod antenna with a stainless steel shield eliminates standpipe interference. Various lengths available.

Antenna configurations for SITRANS LR200

Antenna types	Flat Faced Flange with Rod	Shielded Rod	Horn (4", 6", 8" sizes available)
Connection type	Flat faced flange nominal pipe sizes 50, 80, 100, 150 mm (2, 3, 4, 6 inch)	Threaded 2" NPT, R 2" (BSPT), G 2" (BSPP) or flat faced flange nominal pipe sizes 80, 100 mm (3, 4 inch)	Flat faced flange nominal pipe sizes 50, 80, 100, 150 mm (2, 3, 4, 6 inch)
Wetted parts	PTFE	PTFE, 316L stainless steel, FKM O-ring	316L stainless steel PTFE, FKM O-ring
Extensions	50 or 100 mm (2 or 4 inch) PTFE or UHMW-PE	100, 150, 200 or 250 mm (4, 6, 8 or 10 inch) standard shield length	Use waveguide for extensions to 6 m (20 ft) long
Dielectric constant	> 3	> 3	> 3
Insertion length (max.)	41 cm (16.3 inch)	Variable	Variable with extension
Purging option (liquid or gas)	No	No	Yes
Sliding waveguide option for digesters[1)]	Yes	No	Yes
Weight[2)]	6.5 kg (14.3 lb)	5.0 kg (11 lb)	7.5 kg (16.5 lb)

1) Maximum pressure 0.5 bar g at 60 °C (7.25 psi g at 140 °F)

2) Not including extensions, includes SITRANS LR200 and smallest process connection

© Siemens 2020

Technical specifications

Mode of operation	
Measuring principle	Radar level measurement
Frequency	C-band, approx. 6 GHz
Measuring range	0.3 ... 20 m (1.0 ... 65 ft)
Output	
Analog output	4 ... 20 mA
Accuracy	± 0.02 mA
Span	Proportional or inversely proportional
Communications	HART Optional: PROFIBUS PA (Profile 3.0, Class B)
Fail-safe	Programmable as high, low or hold (Loss of Echo)
Performance (according to reference conditions IEC60770-1)	
From end of antenna to 600 mm	40 mm (1.57 inch)
Remainder of range	10 mm (0.4 inch) or 0.1 % of span (whichever is greater)
Rated operating conditions	
Installation conditions	
• Location	Indoor/outdoor
Ambient conditions (enclosure)	
• Ambient temperature	-40 ... +80 °C (-40 ... +176 °F)
• Storage temperature	-40 ... +80 °C (-40 ... +176 °F)
• Installation category	I
• Pollution degree	4
Medium conditions	
Dielectric constant ε_r	$\varepsilon_r > 1.6$ (for $\varepsilon_r < 3$, use stillpipe)
Vessel temperature and pressure	Varies with connection type; see Pressure/Temperature curves for more information
Design	
Enclosure	
• Material	Aluminum, polyester powder coated
• Cable inlet	2 x M20 x 1.5 or 2 x ½" NPT
Degree of protection	Type 4X/NEMA 4X, Type 6/ NEMA 6, IP67, IP68
Weight	< 2.82 kg (6.21 lb) (polypropylene rod antenna)
Display (local)	Multi-segment alphanumeric liquid crystal with bar graph (representing level) available in four languages
Antenna	
• Material	Polypropylene rod, hermetically sealed construction, optional PTFE
• Dimensions	Standard 100 mm (4 inch) shield for maximum 100 mm (4 inch) nozzle, or optional 250 mm (10 inch) long shield
• Optional rods and horn	Refer to SITRANS LR200 Antennas for optional rods and horns
Process connections	
• Process connection	1½" NPT [(Taper), ANSI/ASME B1.20.1] R 1½" [(BSPT), EN 10226], or G 1½" [(BSPP), EN ISO 228-1] (polypropylene rod antenna)
• Flange connection	Refer to SITRANS LR200 Antennas for more connections

Power supply	
4 ... 20 mA/HART	
• General Purpose, Non-incendive, Intrinsically Safe	Nominal 24 V DC (max. 30 V DC) with max. 550 Ω
• Flame proof, Increased safety, Explosion proof	Nominal 24 V DC (max. 30 V DC) with max. 250 Ω
PROFIBUS PA	• 10.5 mA • Per IEC 61158-2
Certificates and approvals	
General	$CSA_{US/C}$, CE, FM, RCM
Marine	• Lloyd's Register of Shipping • ABS Type Approval
Radio	FCC, Industry Canada, and European (RED), RCM
Hazardous	
• Intrinsically Safe (Brazil)	INMETRO Ex ia IIC T4 Ga
• Explosion Proof (Canada/USA)	CSA/FM, Class I, Div. 1, Groups A, B, C, D; Class II, Div. 1, Groups E, F, G; Class III, T4
• Intrinsically Safe (Canada/USA)	CSA/FM, Class I, Div. 1, Groups A, B, C, D; Class II, Div. 1, Groups E, F, G; Class III, T4
• Non-incendive (USA)	FM, Class I, Div. 2, Groups A, B, C, D, T5
• Flame Proof/Increased Safety (China)	NEPSI Ex d mb ia IIC T4/ Ex e mb ia IIC T4
• Flame Proof (Europe)	ATEX II 1/2 G Ex d mb ia IIC T4 Ga/Gb
• Increased Safety (Europe)	ATEX II 1/2 G Ex e mb ia IIC T4 Ga/Gb
• Intrinsically Safe (Europe)	ATEX II 1G Ex ia IIC T4
• Intrinsically Safe (International)	IECEx Ex ia IIC T4
• Intrinsically Safe (Russia/Kazakhstan)	EAC Ex ia
Programming	
Intrinsically Safe Siemens handheld programmer	Infrared receiver
• Approvals for handheld programmer	IS model: ATEX II 1GD Ex ia IIC T4 Ga Ex iaD 20 T135 °C T_a = -20 ... +50 °C CSA/FM Class I, II, and III, Div. 1, Groups A, B, C, D, E, F, G, T6 T_a = +50 °C
Handheld communicator	HART communicator 375
PC	• SIMATIC PDM • AMS • SITRANS DTM (for connecting to FDT such as PACTware or Fieldcare)
Display (local)	Multi-segment alphanumeric liquid crystal with bar graph (representing level) available in four languages

© Siemens 2020

Selection and ordering data

	Article No.
SITRANS LR200 Radar level transmitter with polypropylene rod ↗ Continuous, non-contact, 20 m (66 ft) range, for liquids and slurries. ↗ Click on the Article No. for the online configuration in the PIA Life Cycle Portal.	**7ML5422-** ■ ■ ■ ■ **0**
Enclosure/Cable inlet	
Aluminum, epoxy painted	
2 x ½" NPT	**2**
2 x M20 x 1.5	**3**
Polypropylene antenna type - (Max. 3 Bar pressure and 80 °C)	
1½" NPT [(Taper), ANSI/ASME B1.20.1], c/w integral 100 mm shield	**A**
R 1½" [(BSPT), EN 10226], c/w integral 100 mm shield	**B**
G 1½" [(BSPP), EN ISO 228-1], c/w integral 100 mm shield	**C**
1½" NPT [(Taper), ANSI/ASME B1.20.1], c/w integral 250 mm shield	**D**
R 1½" [(BSPT), EN 10226], c/w integral 250 mm shield	**E**
G 1½" [(BSPP), EN ISO 228-1], c/w integral 250 mm shield	**F**
Approvals	
General Purpose, CE, RED, RCM	**A**
General Purpose, CSA, FM, Industry Canada, FCC	**B**
Intrinsically Safe, CSA Class I, II, Div. 1, Groups A, B, C, D, E, F, G, Industry Canada	**C**
Intrinsically Safe, FM Class I, II, Div. 1, Groups A, B, C, D, E, F, G, FCC	**D**
Intrinsically Safe, IECEx/ATEX II 1G Ex ia IIC T4, INMETRO Ex ia IIC T4, CE, RED, RCM; EAC	**E**
Non incendive, FM Class I, Div. 2, Groups A, B, C, D, FCC[1)]	**F**
Increased Safety, ATEX II ½G Ex e mb ia IIC T4 Ga/Gb, CE, RED, RCM; EAC[2)3)]	**G**
Flame Proof, ATEX II ½G Ex d mb ia IIC T4 Ga/Gb, CE, RED, RCM; EAC[3)]	**H**
Explosion Proof, CSA/FM Class I, II, III, Groups A, B, C, D, E, F, G, Industry Canada, FCC[1)3)]	**J**
Communication/Output	
PROFIBUS PA	**2**
4 ... 20 mA, HART, start-up at < 3.6 mA	**3**

1) Available with enclosure option 2 only.
2) Available with enclosure option 3 only.
3) Available with communication option 3 only.

	Order code
Further designs	
Please add "**-Z**" to Article No. and specify Order code(s).	
Stainless steel tag [69 x 50 mm (2.71 x 1.97 inch)]: Measuring-point number/identification (max. 27 characters); specify in plain text	**Y15**
Manufacturer's test certificate: M to DIN 55350, Part 18 and to ISO 9000	**C11**
Namur NE43 compliant, device preset to failsafe < 3.6 mA[1)]	**N07**
Operating Instructions	
All literature is available to download for free, in a range of languages, at	
http://www.siemens.com/processinstrumentation/documentation	
Accessories	Article No.
Handheld programmer, Intrinsically safe, EEx ia	**7ML1930-1BK**
HART modem/USB (for use with a PC and SIMATIC PDM)	**7MF4997-1DB**
One metallic cable gland M20 x 1.5, rated -40 ... +80 °C (-40 ... +176 °F), HART[2)]	**7ML1930-1AP**
One metallic cable gland M20 x 1.5, rated -40 ... +80 °C (-40 ... +176 °F), PROFIBUS PA[2)]	**7ML1930-1AQ**
One general purpose polymeric cable gland M20 x 1.5, rated -20 ... + 80 °C (-40 ... +176 °F)	**7ML1930-1AM**
SITRANS RD100, loop powered display - see Chapter 7	**7ML5741-.....-.**
SITRANS RD150, remote digital display for 4 ... 20 mA and HART devices - see Chapter 7	**7ML5742-.....-....**
SITRANS RD200, universal input display with Modbus conversion - see Chapter 7	**7ML5740-.....-..**
SITRANS RD300, dual line display with totalizer and linearization curve and Modbus conversion - see Chapter 7	**7ML5744-.....-..**
For applicable back up point level switch - see point level measurement section	

1) Available with communication option 3 only.
2) Product shipped with plastic cable gland, rated to -20 °C. If -40 °C rating required, then metallic cable gland is recommended.

© Siemens 2020

Selection and ordering data

	Article No.
SITRANS LR200 Radar level transmitter with PTFE rod ↗	**7ML5423-** ■■■■■ - ■■■■
Continuous, non-contact, 20 m (66 ft) range, for liquids and slurries.	
↗ Click on the Article No. for the online configuration in the PIA Life Cycle Portal.	
Antenna material (uses antenna adapter)	
PTFE, uses antenna adapter and additional process connection below	**1**
Process connection (refer to Pressure/Temperature curves, page 4/259)	
Flanges (316L stainless steel)	
DN 50 PN 16, Type A, flat faced	**A A**
DN 80 PN 16, Type A, flat faced	**B A**
DN 100 PN 16, Type A, flat faced	**C A**
DN 150 PN 16, Type A, flat faced	**D A**
2" ASME 150 lb, flat faced	**F B**
3" ASME 150 lb, flat faced	**G B**
4" ASME 150 lb, flat faced	**H B**
6" ASME 150 lb, flat faced	**J B**
DN 50 PN 40, flat faced	**A C**
DN 80 PN 40, flat faced	**B C**
DN 100 PN 40, flat faced	**C C**
DN 150 PN 40, flat faced	**D C**
2" ASME 300 lb, flat faced, available with Pressure rating option 1 only due to flange hole spacing	**F D**
3" ASME 300 lb, flat faced	**G D**
4" ASME 300 lb, flat faced	**H D**
6" ASME 300 lb, flat faced	**J D**
JIS DN 50 10K	**A E**
JIS DN 80 10K	**B E**
JIS DN 100 10K	**C E**
JIS DN 150 10K	**D E**
(Note: Flange bolting patterns and facings dimensionally correspond to the applicable ASME B16.5, or EN 1092-1, or JIS B 2220 standard.)	
Threaded connection (316L stainless steel)	
1½" NPT [(Taper), ANSI/ASME B1.20.1]	**L A**
2" NPT [(Taper), ANSI/ASME B1.20.1]	**M A**
R 1½" [(BSPT), EN 10226]	**L C**
R 2" [(BSPT), EN 10226]	**M C**
G 1½" [(BSPP), EN ISO 228-1]	**L E**
G 2" [(BSPP), EN ISO 228-1]	**M E**
Antenna extensions or Inactive shield length	
No antenna extension	**0**
50 mm (2 inch) extension, PTFE	**1**
100 mm (4 inch) extension, PTFE	**2**
100 mm (4 inch) extension, 316L stainless steel shield[1)]	**3**
150 mm (6 inch) extension, 316L stainless steel shield[1)]	**4**
200 mm (8 inch) extension, 316L stainless steel shield[1)]	**5**
250 mm (10 inch) extension, 316L stainless steel shield[1)]	**6**
Process seal/gasket	
Integral Gasket, for flat faced flange process connections only, not for Antenna extension options 3 ... 6	**0**
FKM O-ring, not available for combination of flat faced flanges with Antenna extension options 0, 1 or 2	**1**

	Article No.
SITRANS LR200 Radar level transmitter with PTFE rod	**7ML5423-** ■■■■■ - ■■■■
Continuous, non-contact, 20 m (66 ft) range, for liquids and slurries.	
Enclosure/Cable inlet	
Aluminum, Epoxy painted	
2 x ½" NPT	**2**
2 x M20 x 1.5	**3**
Communication/Output	
PROFIBUS PA	**B**
4 ... 20 mA, HART, start-up at < 3.6 mA	**C**
Approvals	
General Purpose, CE, RED, RCM	**A**
General Purpose, CSA, FM, Industry Canada, FCC	**B**
Intrinsically Safe, CSA Class I, II, Div. 1, Groups A, B, C, D, E, F, G, Industry Canada	**C**
Intrinsically Safe, FM Class I, II, Div. 1, Groups A, B, C, D, E, F, G, FCC	**D**
Intrinsically Safe, IECEx/ATEX II 1G Ex ia IIC T4, INMETRO Ex ia IIC T4, CE, RED, RCM; EAC	**E**
Non incendive, FM Class I, Div. 2, Groups A, B, C, D, FCC[2)]	**F**
Increased Safety, ATEX II ½G Ex e mb ia IIC T4 Ga/Gb, CE, RED, RCM; EAC[3)4)]	**G**
Flame Proof, ATEX II ½G Ex d mb ia IIC T4 Ga/Gb, CE, RED, RCM; EAC[4)]	**H**
Explosion Proof, CSA/FM Class I, II, III, Groups A, B, C, D, E, F, G, Industry Canada, FCC[2)4)]	**J**
Pressure rating	
Rating per Pressure/Temperature curves in manual	**0**
0.5 bar g (7.25 psi g) maximum	**1**

1) Available with process connection options BA, CA, DA, GB, HB, JB, BC, CC, DC, GD, HD, JD, BE, CE, DE, MA, MC, ME only.

2) Available with enclosure option 2 only.

3) Available with enclosure option 3 only.

4) Available with communication option C only.

© Siemens 2020

Selection and ordering data

	Order code
Further designs	
Please add "**-Z**" to Article No. and specify Order code(s).	
Stainless steel tag [69 x 50 mm (2.71 x 1.97 inch)]: Measuring-point number/identification (max. 27 characters); specify in plain text	**Y15**
Manufacturer's test certificate: M to DIN 55350, Part 18 and to ISO 9000	**C11**
Material inspection Certificate Type 3.1 per EN 10204	**C12**
Namur NE43 compliant, device preset to failsafe < 3.6 mA[3)]	**N07**
Operating Instructions	
All literature is available to download for free, in a range of languages, at	

http://www.siemens.com/processinstrumentation/documentation

	Article No
Accessories	
Handheld programmer, Intrinsically safe, EEx ia	**7ML1930-1BK**
Antenna, rod, PTFE	**7ML1830-1HC**
Antenna extension, 50 mm (2 inch), PTFE	**7ML1830-1CH**
Antenna extension, 100 mm (4 inch), PTFE	**7ML1830-1CG**
HART modem / USB (for use with PC and SIMATIC PDM)	**7MF4997-1DB**
Metallic cable gland M20 x 1.5, rated -40 °C (-40 °F) ... 80 °C (176 °F), HART (two are required)	**7ML1930-1AP**
Metallic cable gland M20 x 1.5, rated -40 °C (-40 °F) ... 80 °C (176 °F), PROFIBUS PA (two required)	**7ML1930-1AQ**
One General Purpose polymeric cable gland M20 x 1.5, rating for -20 °C (-4°F) ... + 80 °C (176 °F)	**7ML1930-1AM**
SITRANS RD100, loop powered display - see Chapter 7	**7ML5741-.....-.**
SITRANS RD150, remote digital display for 4 ... 20 mA and HART devices - see Chapter 7	**7ML5742-.....-....**
SITRANS RD200, universal input display with Modbus conversion - see Chapter 7	**7ML5740-.....-..**
SITRANS RD300, dual line display with totalizer and linearization curve and Modbus conversion - see Chapter 7	**7ML5744-.....-..**
For applicable back up point level switch - see point level measurement section	

© Siemens 2020

Selection and ordering data

	Article No.
SITRANS LR200 Radar level transmitter with horn ↗	**7ML5425-** ■■■■■ - ■■■■
Continuous, non-contact, 20 m (66 ft) range, for liquids and slurries.	
↗ Click on the Article No. for the online configuration in the PIA Life Cycle Portal.	
Antenna material (uses antenna adapter)	
316L stainless steel with PTFE cone emitter	**0**
316L stainless steel with PTFE cone emitter and purge connection with 1/8" NPT inlet[1]	**1**
Process connection (refer to Pressure/Temperature curves, page 4/259)	
Flanges (316L stainless steel)	
DN 50 PN 16 EN 1092-1 Type A flat faced[1]	**A A**
DN 80 PN 16 EN 1092-1 Type A flat faced	**B A**
DN 100 PN 16 EN 1092-1 Type A flat faced	**C A**
DN 150 PN 16 EN 1092-1 Type A flat faced	**D A**
DN 200 PN 16 EN 1092-1 Type A flat faced	**E A**
DN 80 PN 10/16 DIN EN 1092-1 Type B1 raised face[2]	**B F**
DN 100 PN 10/16 DIN EN 1092-1 Type B1 raised face[3]	**C F**
DN 150 PN 10/16 DIN EN 1092-1 Type B1 raised face[3]	**D F**
DN 200 PN 16 DIN EN 1092-1 Type B1 raised face[3]	**E F**
2" ASME 150 lb, flat faced[1]	**F B**
3" ASME 150 lb, flat faced	**G B**
4" ASME 150 lb, flat faced	**H B**
6" ASME 150 lb, flat faced	**J B**
8" ASME 150 lb, flat faced	**K B**
DN 50 PN 40, flat faced[3]	**A C**
DN 80 PN 40, flat faced[3]	**B C**
DN 100 PN 40, flat faced[3]	**C C**
DN 80 PN 25/40 DIN EN 1092-1 Type B1 raised face[3]	**C G**
DN 100 PN 25/40 DIN EN 1092-1 Type B1 raised face[3]	**D G**
DN 150 PN 25/40 DIN EN 1092-1 Type B1 raised face[3]	**E G**
2" ASME 300 lb, flat faced[1][3]	**F D**
3" ASME 300 lb, flat faced[3]	**G D**
4" ASME 300 lb, flat faced[3]	**H D**
JIS DN 50 10K[1]	**A E**
JIS DN 80 10K	**B E**
JIS DN 100 10K	**C E**
JIS DN 150 10K	**D E**
JIS DN 200 10K	**E E**
(Note: Flange bolting patterns and facings dimensionally correspond to the applicable ASME B16.5, or EN 1092-1, or JIS B 2220 standard.)	
Communication/Output	
PROFIBUS PA	**1**
4 ... 20 mA, HART, start-up at < 3.6 mA	**2**

	Article No.
SITRANS LR200 Radar level transmitter with horn	**7ML5425-** ■■■■■ - ■■■■
Continuous, non-contact, 20 m (66 ft) range, for liquids and slurries.	
Process seal/gasket	
FKM (-40 ... +200 °C)	**0**
Enclosure/Cable inlet	
Aluminum, Epoxy painted	
2 x ½" NPT	**2**
2 x M20 x 1.5	**3**
Horn size/Waveguide options	
80 mm (3 inch) horn[3]	**B**
100 mm (4 inch) horn[4]	**C**
150 mm (6 inch) horn	**D**
200 mm (8 inch) horn	**E**
100 mm (4 inch) horn with 100 mm (4 inch) waveguide extension[4]	**F**
100 mm (4 inch) horn with 150 mm (6 inch) waveguide extension[4]	**G**
100 mm (4 inch) horn with 200 mm (8 inch) waveguide extension[4]	**H**
100 mm (4 inch) horn with 250 mm (10 inch) waveguide extension[4]	**J**
150 mm (6 inch) horn with 100 mm (4 inch) waveguide extension	**K**
150 mm (6 inch) horn with 150 mm (6 inch) waveguide extension	**L**
150 mm (6 inch) horn with 200 mm (8 inch) waveguide extension	**M**
150 mm (6 inch) horn with 250 mm (10 inch) waveguide extension	**N**
200 mm (8 inch) horn with 100 mm (4 inch) waveguide extension	**P**
200 mm (8 inch) horn with 150 mm (6 inch) waveguide extension	**Q**
200 mm (8 inch) horn with 200 mm (8 inch) waveguide extension	**R**
200 mm (8 inch) horn with 250 mm (10 inch) waveguide extension	**S**

© Siemens 2020

Selection and ordering data

	Article No.
SITRANS LR200 Radar level transmitter with horn Continuous, non-contact, 20 m (66 ft) range, for liquids and slurries.	**7ML5425-** ■■■■■ - ■■■■
Approvals	
General Purpose, CE, RED, RCM	**A**
General Purpose, CSA, FM, Industry Canada, FCC	**B**
Intrinsically Safe, CSA Class I, II, Div. 1, Groups A, B, C, D, E, F, G, Industry Canada	**C**
Intrinsically Safe, FM Class I, II, Div. 1, Groups A, B, C, D, E, F, G, FCC	**D**
Intrinsically Safe, IECEx/ATEX II 1G Ex ia IIC T4, INMETRO Ex ia IIC T4, CE, RED, RCM; EAC	**E**
Non incendive, FM Class I, Div. 2, Groups A, B, C, D, FCC[4]	**F**
Increased Safety, ATEX II ½G Ex e mb ia IIC T4 Ga/Gb, CE, RED, RCM; EAC[5][6]	**G**
Flame Proof, ATEX II ½G Ex d mb ia IIC T4 Ga/Gb, CE, RED, RCM; EAC[7]	**H**
Explosion Proof, CSA/FM Class I, II, III, Groups A, B, C, D, E, F, G, Industry Canada, FCC[5][7]	**J**
Pressure rating	
Rating per Pressure/Temperature curves in manual	**0**
0.5 bar g (7.25 psi g) maximum	**1**

1) Available with pressure rating option 1 only.
2) Available with Antenna Material options 0 and 1 only.
3) For stillpipe applications only.
4) Available with enclosure option 2 only.
5) Available with enclosure option 3 only.
6) Available with communication option 2 only.
7) Available with Communication/Output option 2 only.

	Order code
Further designs	
Please add "**-Z**" to Article No. and specify Order code(s).	
Stainless steel tag [69 x 50 mm (2.71 x 1.97 inch)]: Measuring-point number/identification (max. 27 characters); specify in plain text	**Y15**
Manufacturer's test certificate: M to DIN 55350, Part 18 and to ISO 9000	**C11**
Material inspection Certificate Type 3.1 per EN 10204	**C12**
Namur NE43 compliant, device preset to failsafe < 3.6 mA[1]	**N07**
Operating Instructions	
All literature is available to download for free, in a range of languages, at	
http://www.siemens.com/processinstrumentation/documentation	

Accessories	Article No.
Handheld programmer, Intrinsically safe, EEx ia	**7ML1930-1BK**
HART modem/USB (for use with a PC and SIMATIC PDM)	**7MF4997-1DB**
One metallic cable gland M20 x 1.5, rated -40 ... +80 °C (-40 ... +176 °F), HART[2]	**7ML1930-1AP**
One metallic cable gland M20 x 1.5, rated -40 ... +80 °C (-40 ... +176 °F), PROFIBUS PA[3]	**7ML1930-1AQ**
One general purpose polymeric cable gland M20 x 1.5, rated -40 ... +80 °C (-40 ... +176 °F)	**7ML1930-1AM**
SITRANS RD100, loop powered display - see Chapter 7	**7ML5741-.....-.**
SITRANS RD150, remote digital display for 4 ... 20 mA and HART devices - see Chapter 7	**7ML5742-.....-....**
SITRANS RD200, universal input display with Modbus conversion - see Chapter 7	**7ML5740-.....-..**
SITRANS RD300, dual line display with totalizer and linearization curve and Modbus conversion - see Chapter 7	**7ML5744-.....-..**
For applicable back up point level switch - see point level measurement section	

1) Available with communication option 2 only.
2) Product shipped with plastic cable gland, rated to -20 °C. If -40 °C rating required, then metallic cable gland is recommended.
3) Available with enclosure option 2 only.

© Siemens 2020

Selection and ordering data

SITRANS LR200 Specials

	Article No.
SITRANS LR200 PROFIBUS PA aluminum enclosure kit with electronics and covers (7ML5422, 7ML5423, 7ML5424, 7ML5425), calibrated for use with standard rod antenna	
SITRANS LR200 aluminum enclosure with board stack, LUI display, 5.8 GHz, M20 cable inlet, approval option E, with PROFIBUS PA communication, no process connection.	**A5E01483420**
SITRANS LR200 aluminum enclosure with board stack, LUI display, 5.8 GHz, M20 cable inlet, approval option A, with PROFIBUS PA communication, no process connection.	**A5E01483440**
SITRANS LR200 aluminum enclosure with board stack, LUI display, 6.3 GHz, M20 cable inlet, approval option C, with PROFIBUS PA communication, no process connection.	**A5E01483456**
SITRANS LR200 aluminum enclosure with board stack, LUI display, 6.3 GHz, NPT cable inlet, approval option C, with PROFIBUS PA communication, no process connection.	**A5E01483547**
SITRANS LR200 aluminum enclosure with board stack, LUI display, 5.8 GHz, NPT cable inlet, approval option E, with PROFIBUS PA communication, no process connection.	**A5E01483559**
SITRANS LR200 HART aluminum enclosure kit with electronics and covers (7ML5422, 7ML5423, 7ML5424, 7ML5425), calibrated for use with standard rod antenna	
SITRANS LR200 aluminum enclosure with board stack, LUI display, 5.8 GHz, M20 cable inlet, approval option A, with HART communication start-up at < 3.6 mA, no process connection.	**A5E02956419**
SITRANS LR200 aluminum enclosure with board stack, LUI display, 5.8 GHz, M20 cable inlet, approval option E, with HART communication start-up at < 3.6 mA, no process connection.	**A5E02956420**
SITRANS LR200 aluminum enclosure with board stack, LUI display, 5.8 GHz, M20 cable inlet, approval option G, with HART communication start-up at < 3.6 mA, no process connection.	**A5E02956421**
SITRANS LR200 aluminum enclosure with board stack, LUI display, 5.8 GHz, M20 cable inlet, approval option H, with HART communication start-up at < 3.6 mA, no process connection.	**A5E02956422**
SITRANS LR200 aluminum enclosure with board stack, LUI display, 5.8 GHz, NPT cable inlet, approval option A, with HART communication start-up at < 3.6 mA, no process connection.	**A5E03617085**
SITRANS LR200 aluminum enclosure with board stack, LUI display, 6.3 GHz, NPT cable inlet, approval option B, with HART communication start-up at < 3.6 mA, no process connection.	**A5E03617086**
SITRANS LR200 aluminum enclosure with board stack, LUI display, 5.8 GHz, NPT cable inlet, approval option C, with HART communication start-up at < 3.6 mA, no process connection.	**A5E03617087**
SITRANS LR200 aluminum enclosure with board stack, LUI display, 6.3 GHz, NPT cable inlet, approval option E, with HART communication start-up at < 3.6 mA, no process connection.	**A5E03617088**

	Article No.
Sun shield for SITRANS LR200 enclosure, stainless steel	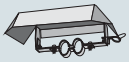 **A5E39142556**
SITRANS LR200 horn antenna kits with mounting screws (no emitter supplied)	
80 mm (3 inch) horn antenna kit	**PBD-25500K02A**
100 mm (4 inch) horn antenna kit	**PBD-25500K03A**
150 mm (6 inch) horn antenna kit	**PBD-25500K05A**
SITRANS LR200 Extension Kits for Horn Antenna with mounting screw	
100 mm (4 inch) extension kit for horn antenna	**PBD-25501K0100A**
150 mm (6 inch) extension kit for horn antenna	**PBD-25501K0150A**
200 mm (8 inch) extension kit for horn antenna	**PBD-25501K0200A**
250 mm (10 inch) extension kit for horn antenna	**PBD-25501K0250A**
500 mm (20 inch) extension kit for horn antenna	**PBD-25501K0500A**
1 000 mm (40 inch) extension kit for horn antenna	**PBD-25501K1000A**
SITRANS LR200 flanged rod antenna kit with 316L stainless steel flat faced flanges	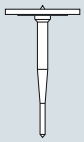
Flanged PTFE rod antenna kit, 2" ASME, 150 lb. See drawing 51003 on http://www.siemens.com/radar[1)4)]	**PBD-51003K020AAAA**
Flanged PTFE rod antenna kit, DN 50 PN16. See drawing 51003 on http://www.siemens.com/radar.[1)4)]	**PBD-51003K050AJAA**
Flanged PTFE rod antenna kit, JIS 10K DN 50. See drawing 51003 on http://www.siemens.com/radar.[1)4)]	**PBD-51003K050AOAA**
SITRANS LR200 PTFE rod antenna kit with 316L stainless steel 1½" pipe thread process connection	
PTFE rod antenna kit, R 1½" (BSPT), EN 10226 316L stainless steel process connection, FKM O-ring. See drawing 51004 on http://www.siemens.com/radar.[4)]	**PBD-51004K2AAA**
PTFE rod antenna kit, 1½" G 316L stainless steel process connection, FKM O-ring. See drawing 51004 on http://www.siemens.com/radar.[4)]	**PBD-51004K3AAA**

© Siemens 2020

Selection and ordering data

	Article No.
SITRANS LR200 PTFE rod antenna kit with 316L stainless steel 2" pipe thread process connection	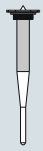
PTFE rod antenna kit, 2" NPT 316L stainless steel process connection, FKM O-ring. See drawing 51005 on http://www.siemens.com/radar.[4]	**PBD-51005K1AAA**
PTFE rod antenna kit, R 2" (BSPT), EN 10226 316L stainless steel process connection, FKM O-ring. See drawing 51005 on http://www.siemens.com/radar.[4]	**PBD-51005K2AAA**
PTFE rod antenna kit, 2" G 316L stainless steel process connection, FKM O-ring. See drawing 51005 on http://www.siemens.com/radar.[4]	**PBD-51005K3AAA**
SITRANS LR200 PTFE rod antenna kit (100 mm shield) with 316L stainless steel 2" pipe thread process connection	
PTFE rod antenna shielded kit, 2" NPT 316L stainless steel process connection, FKM O-ring, 100 mm 316L stainless steel shield. See drawing 51002 on http://www.siemens.com/radar.[3][4]	**PBD-51002K0100AAA**
PTFE rod antenna shielded kit, R 2" (BSPT), EN 10226 316L stainless steel process connection, FKM O-ring, 100 mm 316L stainless steel shield. See drawing 51002 on http://www.siemens.com/radar.[3][4]	**PBD-51002K0100BAA**
PTFE rod antenna shielded kit, 2" G 316L stainless steel process connection, FKM O-ring, 100 mm 316L stainless steel shield. See drawing 51002 on http://www.siemens.com/radar.[3][4]	**PBD-51002K0100CAA**
SITRANS LR200 horn antenna kit with 316L stainless steel flat faced flange, with PTFE emitter (without waveguide)	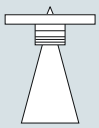
Horn antenna kit, 2" ASME 316L stainless steel flange 3" horn, PTFE emitter [1][4]	**PBD-51006K020AAAA**
Horn antenna kit, 2" ASME 316L stainless steel flange 4" horn, PTFE emitter [1][2]	**PBD-51006K020AABA**
Horn antenna kit, 2" ASME 316L stainless steel flange 6" horn, PTFE emitter [1][2]	**PBD-51006K020AACA**
Horn antenna kit, 2 " ASME 316L stainless steel flange 8" horn, PTFE emitter [1][2]	**PBD-51006K020AADA**
Horn antenna kit, DN 50 PN 16 316L stainless steel flange 80 mm horn, PTFE emitter [1][2]	**PBD-51006K050AJAA**
Horn antenna kit, DN 50 PN 16 316L stainless steel flange 100 mm horn, PTFE emitter [1][2]	**PBD-51006K050AJBA**
Horn antenna kit, DN 50 PN 16 316L stainless steel flange 150 mm horn, PTFE emitter [1][2]	**PBD-51006K050AJCA**
Horn antenna kit, DN 50 PN 16 316L stainless steel flange 200 mm horn, PTFE emitter [1][2]	**PBD-51006K050AJDA**

	Article No.
SITRANS LR200 PTFE flanged rod antenna kit with 316L stainless steel shield and 316L stainless steel flat faced flange	
PTFE shielded rod antenna kit, flanged, 3" ASME 150 lb 316L stainless steel flange, 100 mm 316L stainless steel shield.[1][4]	**PBD-51014K0100AAA**
PTFE shielded rod antenna kit, flanged, DN 80 PN 16 316L stainless steel flange, 100 mm 316L stainless steel shield.[1][4]	**PBD-51014K0100EJA**
PTFE shielded rod antenna kit, flanged, 3" ASME 150 lb 316L stainless steel flange, 150 mm 316L stainless steel shield.[1][4]	**PBD-51014K0150AAA**
PTFE shielded rod antenna kit, flanged, DN 80 PN 16 316L stainless steel flange, 150 mm 316L stainless steel shield.[1][4]	**PBD-51014K0150EJA**
PTFE shielded rod antenna kit, flanged, 3" ASME 150 lb 316L stainless steel flange, 200 mm 316L stainless steel shield.[1][4]	**PBD-51014K0200AAA**
PTFE shielded rod antenna kit, flanged, DN 80 PN 16 316L stainless steel flange, 200 mm 316L stainless steel shield.[1][4]	**PBD-51014K0200EJA**
PTFE shielded rod antenna kit, flanged, 3" ASME 150 lb 316L stainless steel flange, 250 mm 316L stainless steel shield.[1][4]	**PBD-51014K0250AAA**
PTFE shielded rod antenna kit, flanged, DN 80 PN 16 316L stainless steel flange, 250 mm 316L stainless steel shield.[1][4]	**PBD-51014K0250EJA**
PTFE paste	
Kit, PTFE paste, Tube, 250 mL	**PBD-51036065**
Cable gland	
One metallic cable gland M20 x 1.5, rated -40 ... +80 °C (-40 ... +176 °F), HART	**7ML1930-1AP**
One metallic cable gland M20 x 1.5, rated -40 ... +80 °C (-40 ... +176 °F), PROFIBUS PA	**7ML1930-1AQ**

1) Available in flange sizes including ASME, DIN and JIS. Please consult a local sales person for details.

2) Available with no pressure rating. Please consult a local sales person for details.

3) Available in other shield lengths. Please consult a local sales person for details.

4) Available with Pressure rating. Please consult a local sales person for details.

Customers interested in a custom designed device should consult a local sales person. For more information, please visit http://www.automation.siemens.com/aspa_app.

© Siemens 2020

Characteristic curves

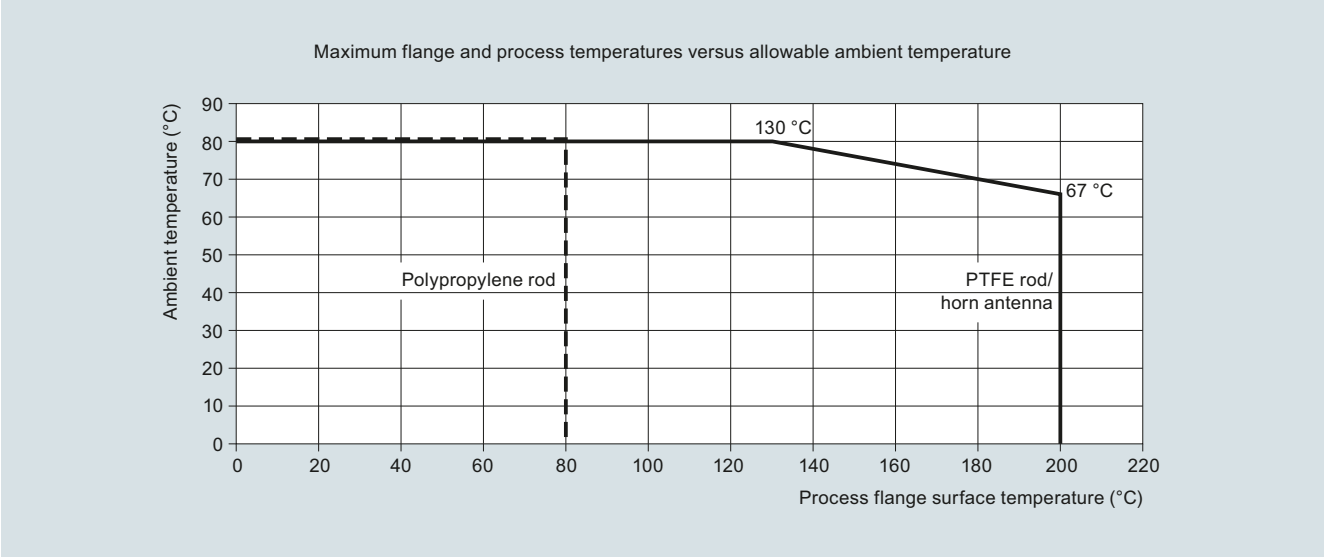

SITRANS LR200 ambient/process flange surface temperature curve

© Siemens 2020

Characteristic curves (continued)

SITRANS LR200 process pressure/temperature derating curves

© Siemens 2020

Dimensional drawings

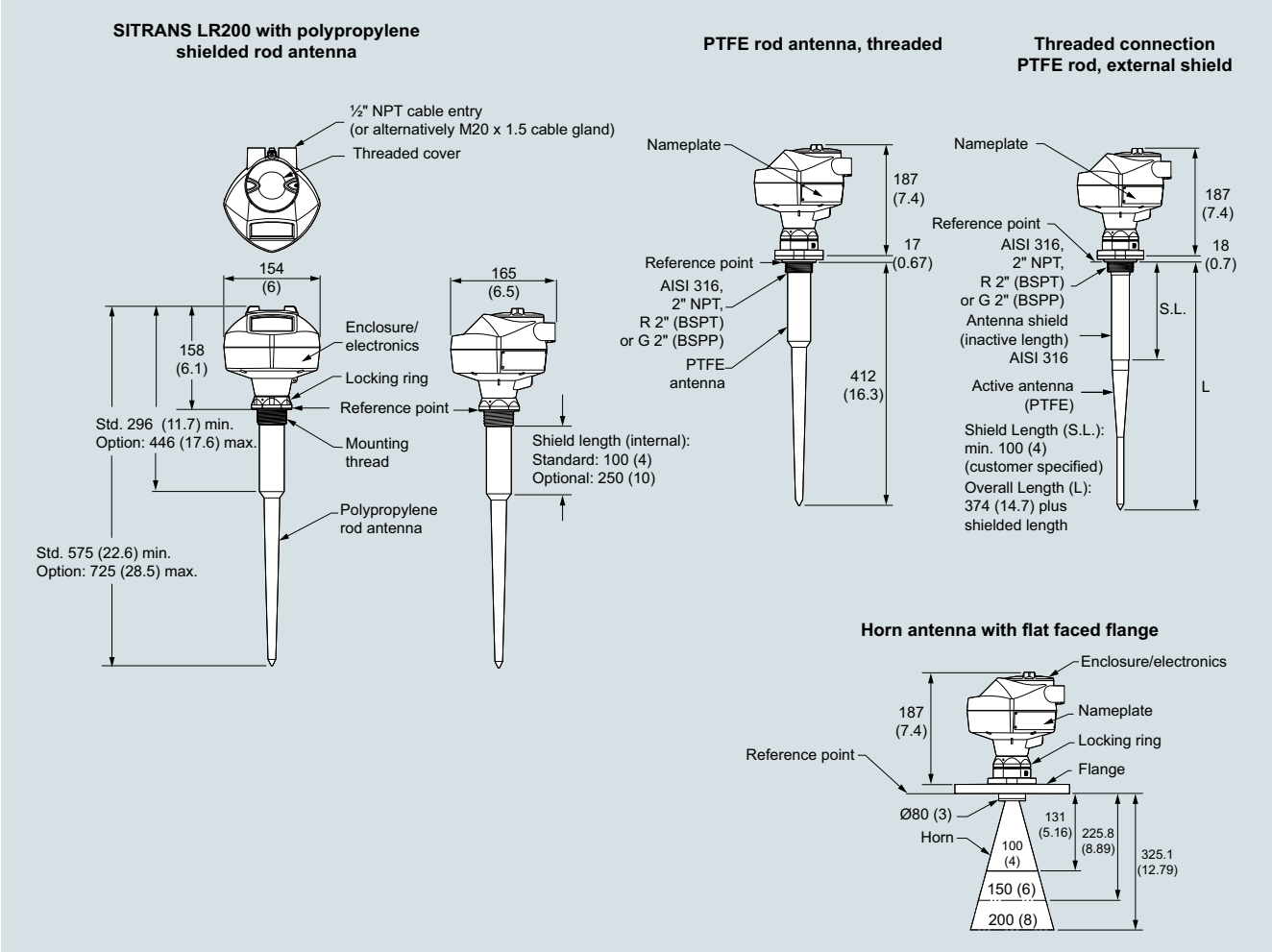

SITRANS LR200, dimensions in mm (inch)

© Siemens 2020

Circuit diagrams

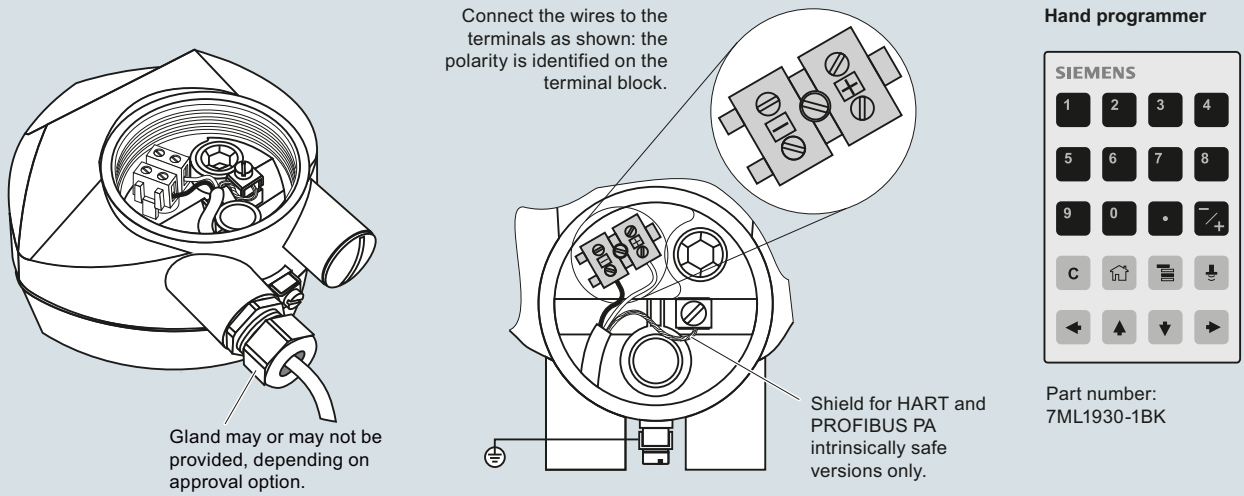

Notes:

1. DC terminal shall be supplied from an SELV source in accordance with IEC 1010-1 Annex H.
2. All field wiring must have insulation suitable for rated input voltages.
3. Use shielded twisted pair cable (14 ... 22 AWG) for HART version.
4. Separate cables and conduit may be required to conform to standard instrumentation wiring practices or electrical codes.

SITRANS LR200 connections

© Siemens 2020

Overview

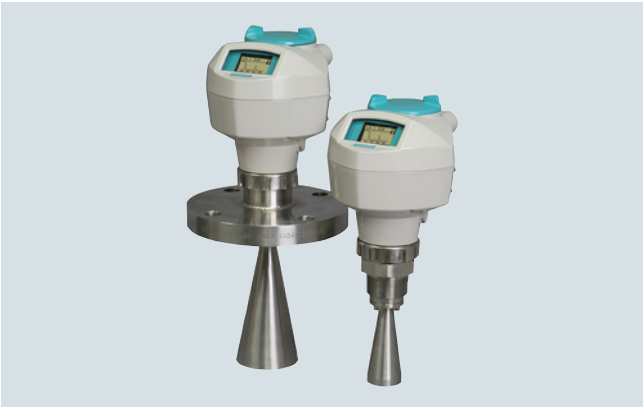

SITRANS LR250 is a 2-wire, 25 GHz pulse radar level transmitter for continuous monitoring of liquids and slurries in storage and process vessels including high temperature and pressure, to a range of 20 m (66 ft).

Benefits

- Graphical local user interface (LUI) makes operation simple with plug-and-play setup using the intuitive Quick Start Wizard
- LUI displays echo profiles for diagnostic support
- 25 GHz high frequency allows for small antennas for easy mounting in nozzles
- Insensitive to mounting location and obstructions, and less sensitive to nozzle interference
- Short blanking distance for improved minimum measuring range to 50 mm (2 inch) from the end of the antenna
- Communication using HART, PROFIBUS PA, or FOUNDATION Fieldbus
- Process Intelligence signal processing for improved measurement reliability and Auto False-Echo Suppression of fixed obstructions
- Programming using infrared Intrinsically Safe handheld programmer or over a network using SIMATIC PDM, Emerson AMS, or Field Device Tools such as PACTware or Fieldcare via SITRANS DTM
- Functional Safety (SIL 2). Device suitable for use in accordance with IEC 61508 and IEC 61511
- 3 mm (0.118 inch) accuracy in accordance with IEC 60770-1
- Suitable for API 2350

Application

SITRANS LR250 includes a graphical local user interface (LUI) that improves setup and operation by including an intuitive Quick Start Wizard, and echo profile displays for diagnostic support. Startup is easy using the Quick Start wizard with a few parameters required for basic operation.

The 25 GHz frequency creates a narrow, focused beam allowing for smaller horn antenna options and decreasing sensitivity to obstructions.

SITRANS LR250's unique design allows safe and simple programming using the Intrinsically Safe handheld programmer without saving to open the instrument's lid.

SITRANS LR250 measures superbly on low dielectric media, and in small vessels, as well as tall and narrow vessels.

- Key Applications: liquid bulk storage tanks, process vessels, vaporous liquids, high temperatures, low dielectric media and applications with functional safety requirements

Configuration

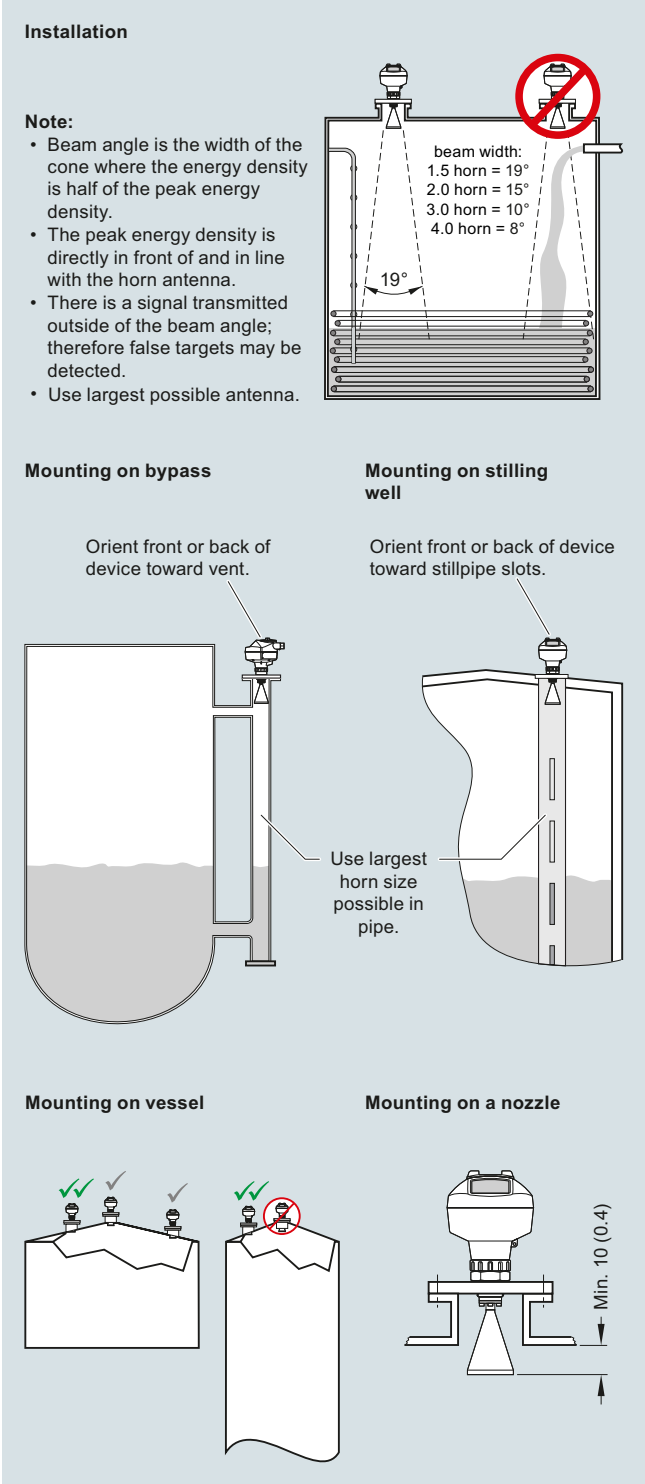

SITRANS LR250 installation, dimensions in mm (inch)

© Siemens 2020

Technical specifications

Mode of operation	
Measuring principle	Radar level measurement
Frequency	K-band (25.0 GHz)
Minimum measuring range	50 mm (2 inch) from end of antenna
Maximum measuring range	20 m (65 ft), antenna dependent
Output	
HART	Version 5.1
• Analog output	4 ... 20 mA
• Accuracy	± 0.02 mA
• Fail-safe	• Programmable as high low or hold (loss of echo) • NE 43 programmable
PROFIBUS PA	Profile 3.01
• Function blocks	2 Analog Input (AI)
FOUNDATION Fieldbus	H1
• Functionality	Basic or LAS
• Version	ITK 5.2.0
• Function blocks	2 Analog Input (AI)
Performance (according to reference conditions IEC60770-1)	
Maximum measured error	3 mm (0.118 inch)
Influence of ambient temperature	< 0.003 %/K
Rated operating conditions	
Installation conditions	
• Location	Indoor/outdoor
Ambient conditions (enclosure)	
• Ambient temperature	-40 ... +80 °C (-40 ... +176 °F)
• Storage temperature	-40 ... +80 °C (-40 ... +176 °F)
• Installation category	I
• Pollution degree	4
Medium conditions	
Dielectric constant ε_r	> 1.6, antenna and application dependent
Process temperature	-40 ... +200 °C (-40 ... +392 °F) (at process connection with FKM O-ring) -20 ... +200 °C (-4 ... +392 °F) (at process connection with FFKM O-ring)
Process pressure	Up to 40 bar g (580 psi g), process connection and temperature dependent. See Pressure/Temperature curves for more information
Design	
Enclosure	
• Material	Aluminum, polyester powder-coated
• Cable inlet	2 x M20 x 1.5 or 2 x ½" NPT
Degree of protection	Type 4X/NEMA 4X, Type 6/NEMA 6, IP67, IP68
Weight	< 3 kg (6.6 lb) 3.75 mm (1½ inch) threaded connection with 1½" horn antenna
Display (local)	Graphic local user interface including quick start wizard and echo profile display
Antenna	
• Material	316L stainless steel
• Dimensions (nominal horn sizes)	Standard 1.5 inch (40 mm), 2 inch (48 mm), 3 inch (75 mm), 4 inch (95 mm) horn, and optional 100 mm (4 inch) horn extension
Process connections	
• Process connection	1½", 2" or 3" NPT [(Taper), ANSI/ASME B1.20.1] R 1½", 2" or 3" [(BSPT), EN 10226] G 1½", 2" or 3" [(BSPP), EN ISO 228-1]
• Flange connection	2", 3", 4" (ANSI 150, 300 lb), 50, 80, 100 mm (PN 16, 40, JIS 10K)

Power supply	
4 ... 20 mA/HART	Nominal 24 V DC (max. 30 V DC) with max. 550 Ω
PROFIBUS PA	• 15 mA • Per IEC 61158-2
FOUNDATION Fieldbus	• 20.0 mA • Per IEC 61158-2
Certificates and approvals	
General	$CSA_{US/C}$, CE, FM, RCM
Radio	FCC, Industry Canada, RED, RCM
Hazardous	
• Explosion Proof (Brazil)	INMETRO Ex d ia mb IIC T4 Ga/Gb, Ex ia ta IIIC T100 °C Da
• Increased Safety (Brazil)	INMETRO Ex e ia mb IIC T4 Ga/Gb, Ex ia ta IIIC T100 °C Da
• Intrinsically Safe (Brazil)	INMETRO Ex ia IIC T4 Ga, Ex ia ta IIIC T100 °C Da
• Explosion Proof (Canada/USA)	CSA/FM Class I, Div. 1, Groups A, B, C, D; Class II, Div. 1, Groups E, F, G; Class III T4
• Intrinsically Safe (Canada/USA)	CSA/FM Class I, Div. 1, Groups A, B, C, D; Class II, Div. 1, Groups E, F, G; Class III T4
• Non-incendive (Canada/USA)	CSA/FM Class I, Div. 2, Groups A, B, C, D T5
• Flame Proof/Increased Safety (China)	NEPSI Ex d ia mb IIC T4 Ga/Gb, Ex e ia mb IIC T4 Ga/Gb, Ex iaD tD A20 IP67 T100 °C
• Intrinsically Safe (China)	NEPSI Ex ia IIC T4 Ga, Ex iaD tD A20 IP67 T100 °C
• Non-sparking (China)	NEPSI Ex nA IIC T4 Gc
• Intrinsically Safe (Europe)	ATEX II 1G Ex ia IIC T4 Ga ATEX II 1D Ex ia IIIC T100 °C Da
• Non-sparking (Europe)	ATEX II 3G Ex nA IIC T4 Gc
• Flame Proof (International/Europe)	IECEx/ATEX II 1/2 GD, 1D, 2D, Ex d mb ia IIC T4 Ga/Gb, Ex ia ta IIC T100 °C Da
• Increased Safety (International/Europe)	IECEx/ATEX II 1/2 GD, 1D, 2D, Ex e mb ia IIC T4 Ga/Gb, Ex ia ta IIIC T100 °C Da
• Intrinsically Safe (International)	IECEx/ATEX II 1 G Ex ia IIC T4 Ga, IECEX/ATEX II 1D Ex ia ta IIC T100 °C Da
• Explosion Proof (Russia/Kazakhstan)	EAC Ex d
• Increased Safety (Russia/Kazakhstan)	EAC Ex e
• Intrinsically Safe (Russia/Kazakhstan)	EAC Ex ia
• Marine	• Lloyd's Register of Shipping • ABS Type Approval • Bureau Veritas
• Functional Safety	SIL-2 suitable in accordance with IEC 61508/61511
Programming	
Intrinsically Safe Siemens handheld programmer	Infrared receiver
• Approvals for handheld programmer	IS model: ATEX II 1 GD Ex ia IIC T4 Ga Ex ia D 20 T135 °C T_a = -20 ... +50 °C CSA/FM Class I, II, III, Div. 1, Groups A, B, C, D, E, F, G, T6 T_a = +50 °C IECEx SIR 09.0073
Handheld communicator	HART communicator 375/475
PC	• SIMATIC PDM • Emerson AMS • SITRANS DTM (for connection into FDT such as PACTware or Fieldcare)
Display (local)	Graphic local user interface including quick start wizard and echo profile displays

© Siemens 2020

Selection and ordering data

	Article No.
SITRANS LR250 Radar level transmitter ↗	**7ML5431-**
Continuous, non-contact, 20 m (66 ft) range, for liquids and slurries.	■ ■ ■ ■ **0** - ■ ■ ■ ■
↗ Click on the Article No. for the online configuration in the PIA Life Cycle Portal.	
Process Connection and Antenna Material	
316L (1.4435 or 1.4404) stainless steel, PTFE emitter, FKM seal[1]	**0**
316L (1.4435 or 1.4404) stainless steel, PTFE emitter, FFKM seal[1]	**1**
Process Connection Type	
Threaded connection 316L	
1½" NPT (ASME B1.20.1) (tapered thread)[3]	**A A**
R 1½" [(BSPT), EN 10226-1] (tapered thread)[3]	**A B**
G 1½" [(BSPP), EN ISO 228-1] (parallel thread)[3]	**A C**
2" NPT (ASME B1.20.1) (tapered thread)[4]	**A D**
R 2" [(BSPT), EN 10226-1] (tapered thread)[4]	**A E**
G 2" [(BSPP), EN ISO 228-1] (parallel thread)[4]	**A F**
3" NPT (ASME B1.20.1) (tapered thread)[4]	**A G**
R 3" [(BSPT), EN 10226-1] (tapered thread)[4]	**A H**
G 3" [(BSPP), EN ISO 228-1] (parallel thread)[4]	**A J**
Flanged connection 316L	
2" Class 150 ASME B16.5, raised face[4]	**B D**
3" Class 150 ASME B16.5, raised face[4]	**B E**
4" Class 150 ASME B16.5, raised face[4]	**B F**
2" Class 300 ASME B16.5, raised face[4]	**C D**
3" Class 300 ASME B16.5, raised face[4]	**C E**
4" Class 300 ASME B16.5, raised face[4]	**C F**
50A 10K JIS B 2220 flat face[4]	**F A**
80A 10K JIS B 2220 flat face[4]	**F B**
100A 10K JIS B 2220 flat face[4]	**F C**
DN 50 PN 16 EN 1092-1 Type B1 raised face[4]	**G A**
DN 80 PN 16 EN 1092-1 Type B1 raised face[4]	**G B**
DN 100 PN 16 EN 1092-1 Type B1 raised face[4]	**G C**
DN 150 PN 16 EN 1092-1 Type B1 raised face[4]	**G D**
DN 50 PN 40 EN 1092-1 Type B1 raised face[4]	**H A**
DN 80 PN 40 EN 1092-1 Type B1 raised face[4]	**H B**
DN 100 PN 40 EN 1092-1 Type B1 raised face[4]	**H C**
DN 150 PN 40 EN 1092-1 Type B1 raised face[4]	**H D**
Communication/Output	
PROFIBUS PA[5]	**1**
4 ... 20 mA, HART, start-up at < 3.6 mA	**2**
FOUNDATION Fieldbus[5]	**3**
Enclosure/Cable inlet	
Aluminum, Epoxy painted	
2 x ½" NPT	**0**
2 x M20 x 1.5	**1**
Antenna	
1½" horn	**A**
2" horn (fits 2" ASME or DN 50 nozzles)	**B**
3" horn (fits 3" ASME or DN 80 nozzles)	**C**
4" horn (fits 4" ASME or DN 100 nozzles)	**D**
1½" horn with 100 mm extension	**E**
2" horn with 100 mm extension	**F**
3" horn with 100 mm extension	**G**
4" horn with 100 mm extension	**H**

	Article No.
SITRANS LR250 Radar level transmitter	**7ML5431-**
Continuous, non-contact, 20 m (66 ft) range, for liquids and slurries.	■ ■ ■ ■ **0** - ■ ■ ■ ■
Approvals	
General Purpose, CE, CSA, FM, FCC, RED, RCM	**A**
Intrinsically Safe: CSA/FM Class I, Div. 1, Groups A, B, C, D, Class II, Div. 1, Groups E, F, G, Class III T4 FCC, Industry Canada	**B**
Intrinsically Safe: IECEx/ATEX II 1 G Ex ia IIC T4 Ga, IECEx/ATEX II 1D Ex ia ta IIIC T100 °C Da, INMETRO Ex ia IIC T4 Ga, Ex ia ta IIIC T100 °C Da, CE, RED, RCM	**C**
Non-incendive: CSA/FM Class I, Div. 2, Groups A, B, C, D T5, FCC, Industry Canada	**D**
Non Sparking: ATEX II 3G Ex nA IIC T4 Gc, CE, RED, RCM	**E**
Increased Safety: IECEx/ATEX II 1/2 GD,1D, 2D Ex e mb ia IIC T4 Ga/Gb, Ex ia ta IIIC T100 °C Da, INMETRO Ex e ia mb IIC T4 Ga/Gb, Ex ia ta IIIC T100 °C Da, CE, RED, RCM[6]	**F**
Flameproof: IECEx/ATEX II 1/2 GD 1D, 2D Ex d mb ia IIC T4 Ga/Gb, Ex ia ta IIIC T100 °C Da INMETRO Ex d ia mb IIC T4 Ga/Gb, Ex ia ta IIIC T100 °C Da, CE, RED, RCM[6]	**G**
Explosion proof: CSA/FM Class I, II, and III, Div. 1, Groups A, B, C, D, E, F, G, FCC, Industry Canada[6]	**H**
Non Sparking: NEPSI Ex nA IIC T4 Gc	**K**
Intrinsically Safe: NEPSI Ex ia IIC T4 Ga, Ex iaD tD A20 IP67 T100 °C	**L**
Flameproof: NEPSI Ex d ia mb IIC T4 Ga/Gb, Ex iaD tD A20 IP67 T100 °C[6]	**M**
Increased Safety: NEPSI Ex e ia mb IIC T4 Ga/Gb, Ex iaD tD A20 IP67 T100 °C[6]	**N**
Pressure rating	
Rating per Pressure/Temperature curves in manual	**0**
0.5 bar g (7.25 psi g) maximum[7]	**1**

[1] Available with process connection options AA ... HD and Antenna Versions A ... H only.

[2] Available with process connection options JA ... MH and Antenna Versions J ... P only.

[3] Not available with Antenna options B, C, D, F, G, H.

[4] Not available with Antenna options A and E.

[5] Available with Approval options A, B, C, D, K, and L.

[6] Available only with Communications option 2.

[7] Available with Process Connection and Antenna Material 0, 1, 2, and 3 only.

© Siemens 2020

Selection and ordering data

	Order code
Further designs	
Please add "**-Z**" to Article No. and specify Order code(s).	
Plug M12 with mating Connector[1)2)3)]	**A50**
Plug 7/8" with mating Connector[2)3)4)]	**A55**
Stainless steel tag [69 x 50 mm (2.71 x 1.97 inch)]: Measuring-point number/identification (max. 27 characters); specify in plain text	**Y15**
Manufacturer's Test Certificate: M to DIN 55350, Part 18 and to ISO 9000	**C11**
Material inspection certificate 3.1 of EN 10204	**C12**
Functional Safety (SIL 2). Device suitable for use in accordance with IEC 61508 and IEC 61511[3)5)]	**C20**
Namur NE43 compliant, device preset to failsafe < 3.6 mA[5)]	**N07**
Operating Instructions	
All literature is available to download for free, in a range of languages, at	

http://www.siemens.com/processinstrumentation/documentation

	Article No
Accessories	
Handheld programmer, Intrinsically safe, EEx ia	**7ML1930-1BK**
HART modem/USB (for use with a PC and SIMATIC PDM)	**7MF4997-1DB**
One metallic cable gland M20 x 1.5, rated -40 ... +80 °C (-40 ... +176 °F), HART (two are required)	**7ML1930-1AP**
One metallic cable gland M20 x 1.5, rated -40 ... +80 °C (-40 ... +176 °F), PROFIBUS PA and FOUNDATION Fieldbus (two are required)[6)]	**7ML1930-1AQ**
FDA approved FKM O-ring for 2" G (BSPP) process connections -28 ... +80 °C (-28 ... +176 °F)	**7ML1830-3AN**
SITRANS RD100, loop powered display - see Chapter 7	**7ML5741-.....-.**
SITRANS RD150, remote digital display for 4 ... 20 mA and HART devices - see Chapter 7	**7ML5742-.....-....**
SITRANS RD200, universal input display with Modbus conversion - see Chapter 7	**7ML5740-.....-..**
SITRANS RD300, dual line display with totalizer and linearization curve and Modbus conversion - see Chapter 7	**7ML5744-.....-..**
For applicable back up point level switch - see point level measurement section	

1) Available with enclosure option 1 only.
2) To be used with communication options 1 and 3 only. Connector has IP67 rating.
3) Available with approval options A and B. Available with approval option C for use on intrinsically safe applications only. Not rated for dust Ex.
4) Available with enclosure option 0 only.
5) Applicable to communication option 2 only.
6) For use with communication options 1 and 3 only.

© Siemens 2020

Selection and ordering data

SITRANS LR250 Spare parts

	Article No.
SITRANS LR250 horn version enclosures (PROFIBUS PA models)	
SITRANS LR250 horn version enclosure with board stack, NPT cable inlet, approval option A, with PROFIBUS PA communication, no process connection	**A5E01156836**
SITRANS LR250 horn version enclosure with board stack, M20 cable inlet, approval option A, with PROFIBUS PA communication, no process connection	**A5E01156838**
SITRANS LR250 horn version enclosure with board stack, M20 cable inlet, approval option B, with PROFIBUS PA communication, no process connection	**A5E01156841**
SITRANS LR250 horn version enclosure with board stack, NPT cable inlet, approval option C, with PROFIBUS PA communication, no process connection	**A5E01156843**
SITRANS LR250 horn version enclosure with board stack, M20 cable inlet, approval option C, with PROFIBUS PA communication, no process connection	**A5E01156844**
SITRANS LR250 horn version enclosure with board stack, NPT cable inlet, approval option D, with PROFIBUS communication, no process connection	**A5E01156846**
SITRANS LR250 horn version enclosure with board stack, M20 cable inlet, approval option D, with PROFIBUS PA communication, no process connection	**A5E01156848**
SITRANS LR250 horn version enclosures (FOUNDATION Fieldbus models)	
SITRANS LR250 enclosure with board stack, NPT cable inlet, approval option B, with FOUNDATION Fieldbus communication, no process connection	**A5E03769538**
SITRANS LR250 enclosure with board stack, NPT cable inlet, approval option D, with FOUNDATION Fieldbus communication, no process connection	**A5E03769539**
SITRANS LR250 enclosure with board stack, M20 cable inlet, approval option E, with FOUNDATION Fieldbus communication, no process connection	**A5E03769543**
SITRANS LR250 horn version enclosure with board stack, M20 cable inlet, approval option C, with FOUNDATION Fieldbus communication, no process connection	**A5E02654608**
SITRANS LR250 horn version enclosure with board stack, NPT cable inlet, approval option A, with FOUNDATION Fieldbus communication, no process connection	**A5E02653792**
SITRANS LR250 horn version enclosure with board stack, M20 cable inlet, approval option A, with FOUNDATION Fieldbus communication, no process connection	**A5E02653793**
SITRANS LR250 horn version enclosure with board stack, NPT cable inlet, approval option C, with FOUNDATION Fieldbus communication, no process connection	**A5E02654606**

	Article No.
SITRANS LR250 horn version enclosures (< 3.6 mA start-up HART)	
SITRANS LR250 horn version enclosure with board stack, M20 cable inlet, approval option A, with HART communication start-up at < 3.6 mA, no process connection	**A5E02956317**
SITRANS LR250 horn version enclosure with board stack, M20 cable inlet, approval option C, with HART communication start-up at < 3.6 mA, no process connection	**A5E02956319**
SITRANS LR250 horn version enclosure with board stack, M20 cable inlet, approval option E, with HART communication start-up at < 3.6 mA, no process connection	**A5E02956320**
SITRANS LR250 horn version enclosure with board stack, M20 cable inlet, approval option F, with HART communication start-up at < 3.6 mA, no process connection	**A5E02956322**
SITRANS LR250 horn version enclosure with board stack, M20 cable inlet, approval option G, with HART communication start-up at < 3.6 mA, no process connection	**A5E02956323**
LR250 horn version enclosure with board stack, NPT cable inlet, approval option A, with HART communication start-up at < 3.6 mA, no process connection	**A5E03441096**
LR250 horn version enclosure with board stack, NPT cable inlet, approval option B, with HART communication start-up at < 3.6 mA, no process connection	**A5E03441097**
LR250 horn version enclosure with board stack, NPT cable inlet, approval option H, with HART communication start-up at < 3.6 mA, no process connection	**A5E03441099**
Sun shield for SITRANS LR250 enclosure, stainless steel	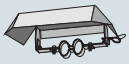
	A5E39142556
SITRANS LR250 horn antenna and extension kits	
38 mm (1.5 inch) horn antenna kit, 1.5 inch Process Connections only	**A5E01151539**
100 mm (4 inch) horn antenna extension kit, 1.5 inch process connections only	**A5E01151553**
50 mm (2 inch) stainless steel 316L horn antenna kit	**A5E01151569**
75 mm (3 inch) stainless steel 316L horn antenna kit	**A5E01151571**
100 mm (4 inch) stainless steel 316L horn antenna kit	**A5E01151573**
100 mm (4 inch) horn antenna extension kit, 50 mm (2 inch), 75 mm (3 inch), and 100 mm (4 inch) process connection	**A5E01151577**
5 Dupont 1Gr Polyback, PTFE grease kit	**A5E01151626**
SITRANS LR250 lid with O-ring	**A5E02465410**
Ex-proof plugs	
Ex-proof plugs kit, 1/2" NPT, qty 5	**A5E39979991**
Ex-proof plugs kit, M20, qty 5	**A5E39979992**

For special requests please consult a local sales person.
For more information, please visit
http://www.automation.siemens.com/aspa_app.

© Siemens 2020

Characteristic curves

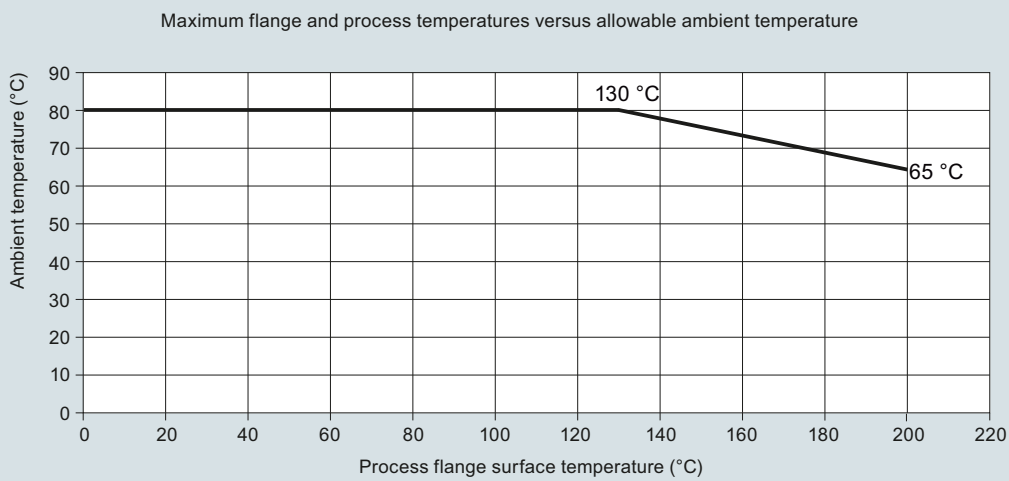

SITRANS LR250 ambient/process flange surface temperature curve

© Siemens 2020

Dimensional drawings

Threaded Horn Antenna

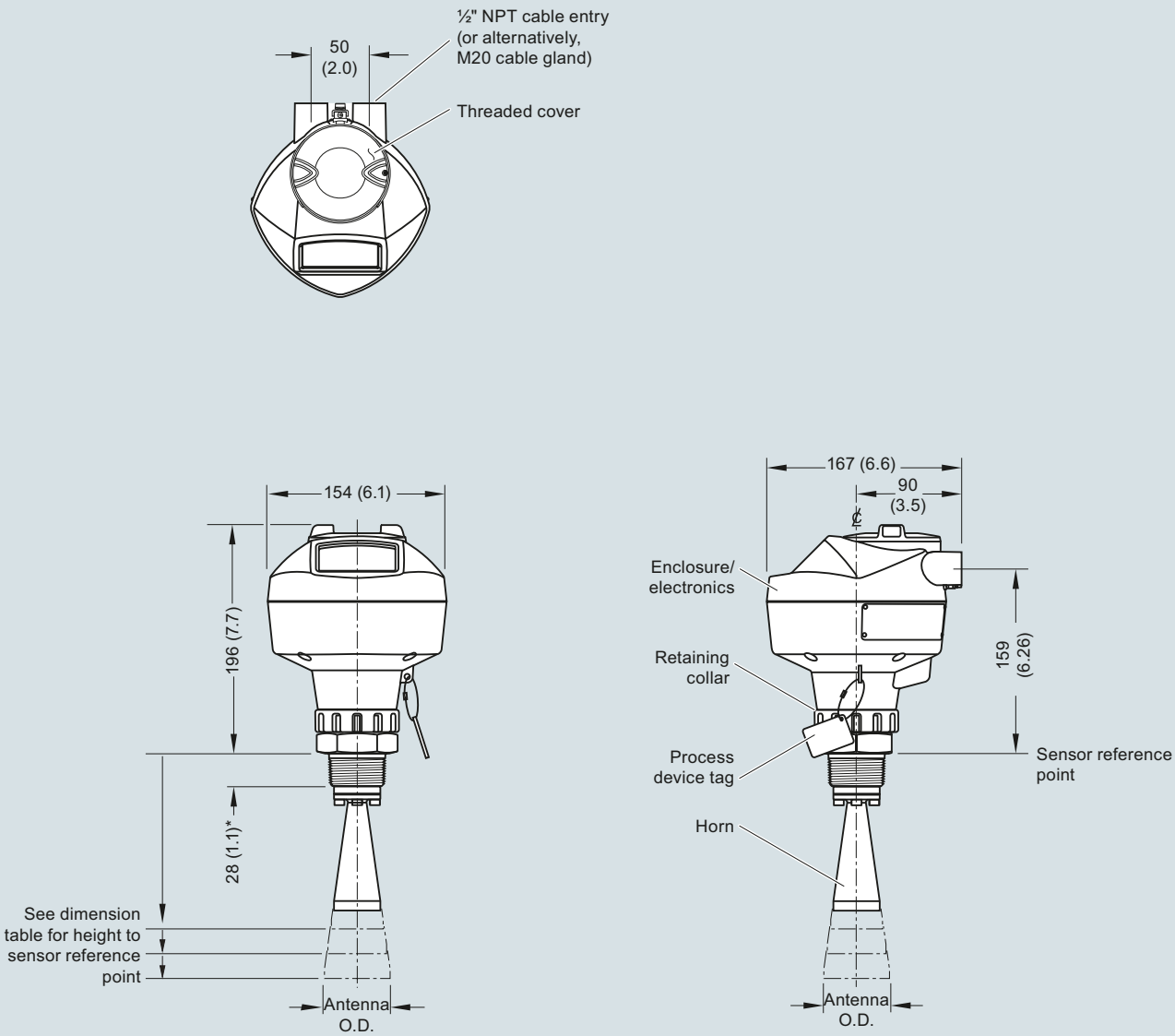

*28 mm (1.1) for 1.5 inch and 2 inch, 42 mm (1.65) for 3 inch

Antenna Type	Antenna O.D.	Height to sensor reference point			Beam angle	Measurement range
		1-1/2" threaded connection	2" threaded connection	3" threaded connection		
1.5" horn	39.8 (1.57)	135 (5.3)	N/A	N/A	19 degrees	10 m (32.8 ft)
2" horn	47.8 (1.88)	N/A	166 (6.55)	180 (7.09)	15 degrees	20 m (65.6 ft)
3" horn	74.8 (2.94)	N/A	199 (7.85)	213 (8.39)	10 degrees	20 m (65.6 ft)
4" horn	94.8 (3.73)	N/A	254 (10)	268 (10.55)	8 degrees	20 m (65.6 ft)

SITRANS LR250 Threaded Horn Antenna, dimensions in mm (inch)

© Siemens 2020

Dimensional drawings (continued)

Threaded Horn Antenna with Extension

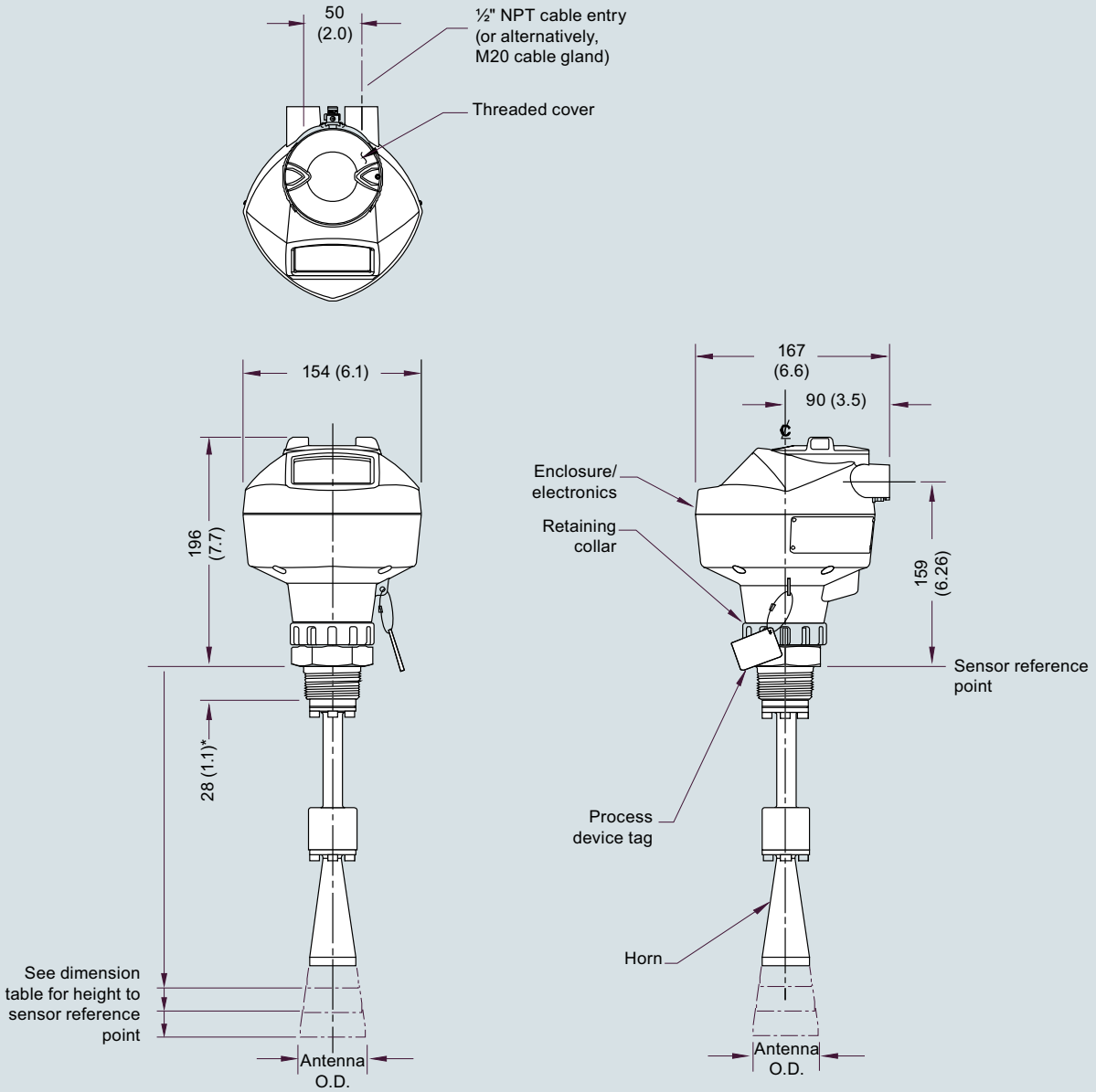

*28 mm (1.1) for 1.5 inch and 2 inch, 42 mm (1.65) for 3 inch

Antenna Type	Antenna O.D.	Height to sensor reference point			Beam angle	Measurement range
		1-1/2" threaded connection	2" threaded connection	3" threaded connection		
1.5" horn	39.8 (1.57)	235 (9.3)	N/A	N/A	19 degrees	10 m (32.8 ft)
2" horn	47.8 (1.88)	N/A	266 (10.47)	280 (11.02)	15 degrees	20 m (65.6 ft)
3" horn	74.8 (2.94)	N/A	299 (11.77)	313 (12.32)	10 degrees	20 m (65.6 ft)
4" horn	94.8 (3.73)	N/A	354 (13.94)	368 (14.49)	8 degrees	20 m (65.6 ft)

SITRANS LR250 Threaded Horn Antenna with extension, dimensions in mm (inch)

© Siemens 2020

Dimensional drawings (continued)

Flanged Horn

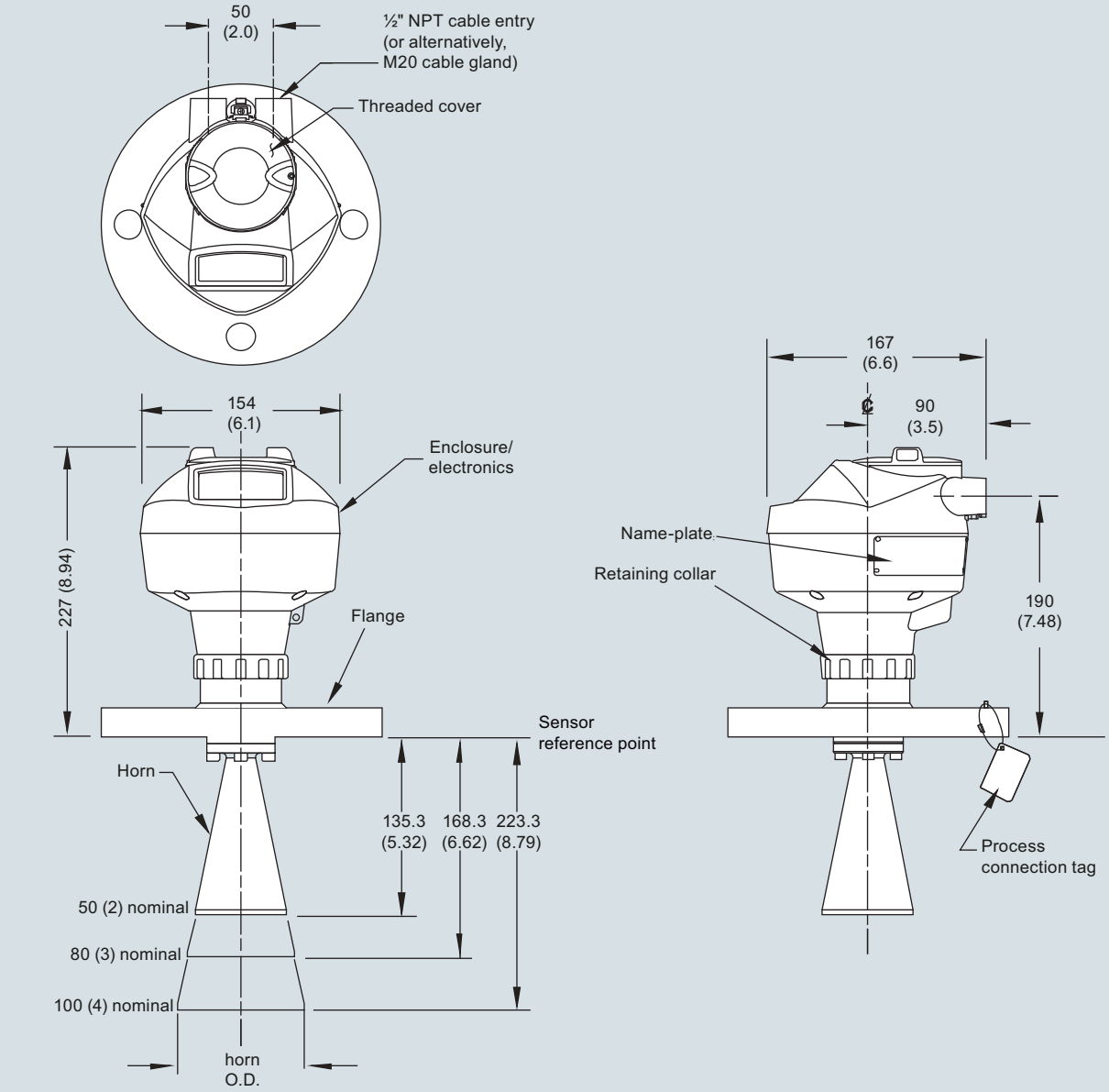

Nominal Horn Size	Horn O.D.	Height to sensor reference point		Beam angle	Measurement range
		Stainless steel flange raised or flat-faced	Optional alloy flange		
50 (2)	47.8 (1.88)	135.3 (5.32)	138.3 (5.44)	15 degrees	20 m (65.6 ft)
80 (3)	74.8 (2.94)	168.3 (6.62)	171.3 (6.74)	10 degrees	20 m (65.6 ft)
100 (4)	94.8 (3.73)	223.3 (8.79)	226.3 (8.90)	8 degrees	20 m (65.6 ft)

SITRANS LR250 Flanged Horn Antenna, dimensions in mm (inch)

© Siemens 2020

Dimensional drawings (continued)

Flanged Horn with Extension

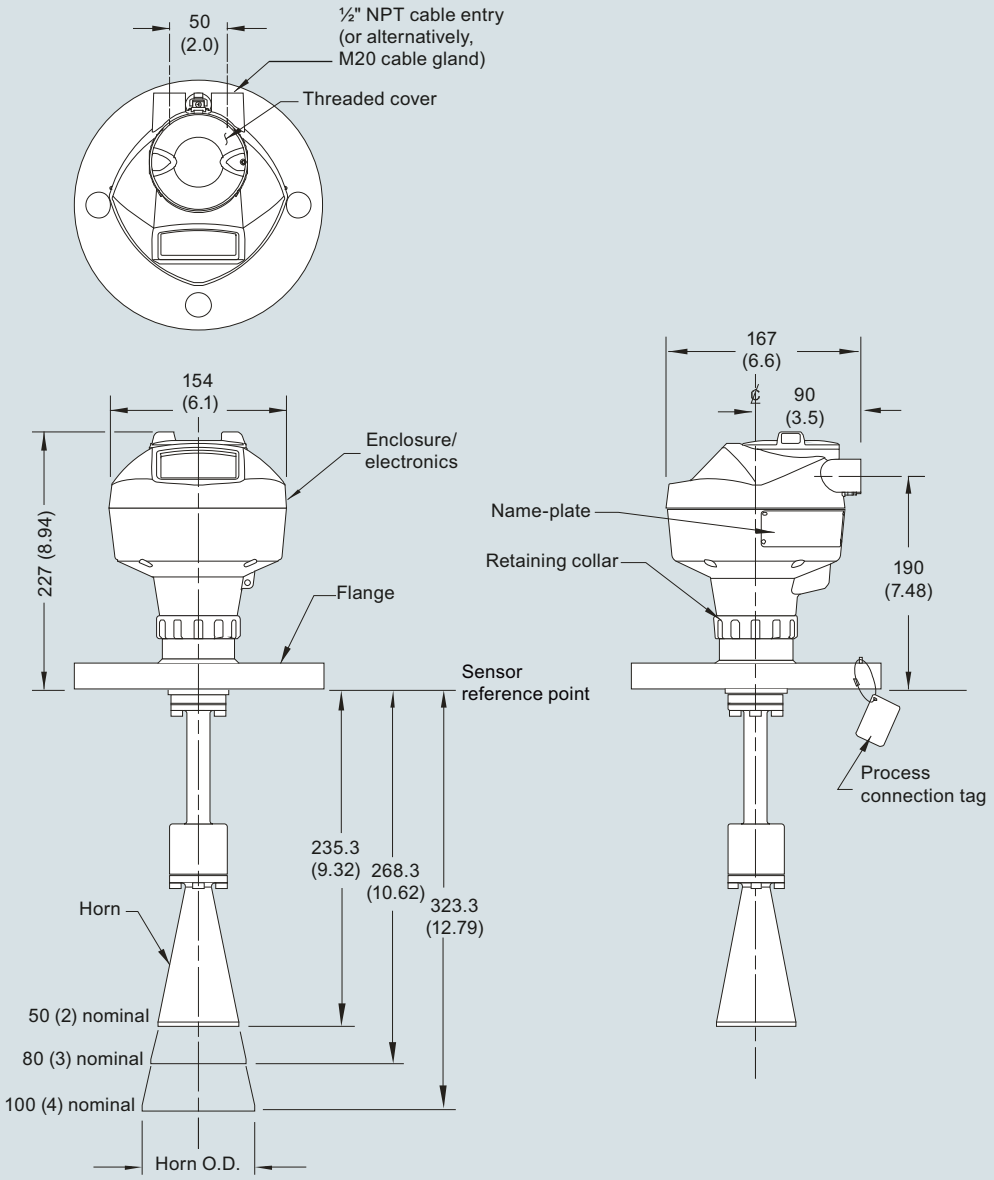

Nominal Horn Size	Horn O.D.	Height to sensor reference point		Beam angle	Measurement range
		Stainless steel flange raised or flat-faced	Optional alloy flange		
50 (2)	47.8 (1.88)	235.3 (9.26)	238.3 (9.38)	15 degrees	20 m (65.6 ft)
80 (3)	74.8 (2.94)	268.3 (10.56)	271.3 (10.68)	10 degrees	20 m (65.6 ft)
100 (4)	94.8 (3.73)	323.3 (12.73)	326.3 (12.85)	8 degrees	20 m (65.6 ft)

SITRANS LR250 Flanged Horn Antenna with extension, dimensions in mm (inch)

© Siemens 2020

Circuit diagrams

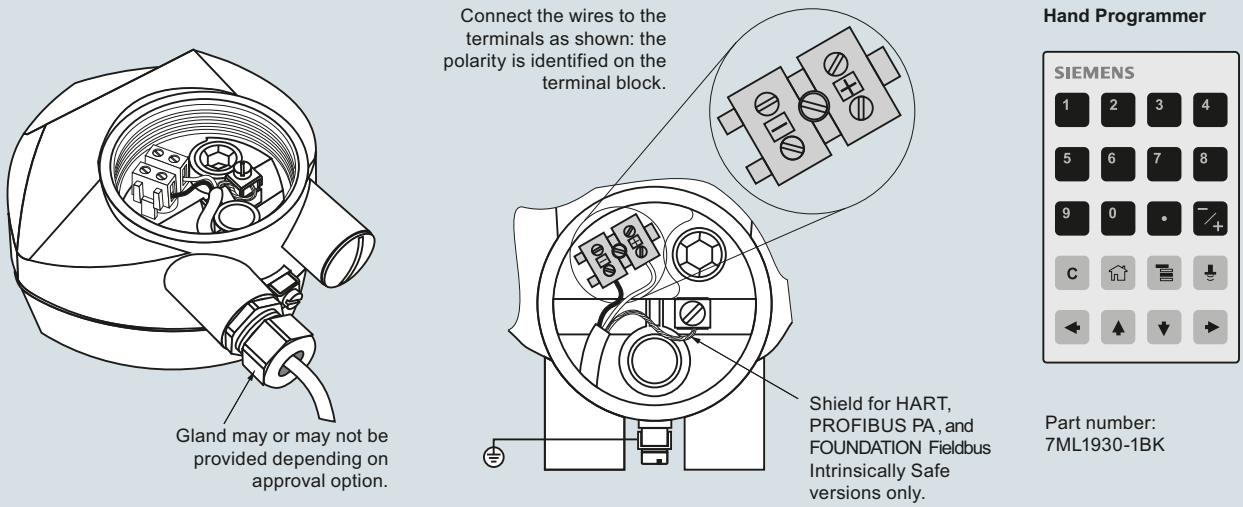

Notes:

1. DC terminal shall be supplied from a source providing electrical isolation between the input and output, to meet the applicable safety requirements of IEC 61010-1.
2. All field wiring must have insulation suitable for rated input voltages.
3. Use shielded twisted pair cable (14 ... 22 AWG) for HART version.
4. Separate cables and conduit may be required to conform to standard instrumentation wiring practices or electrical codes.

SITRANS LR250 connections

© Siemens 2020

SITRANS LR250 Polypropylene Lens Antenna

Overview

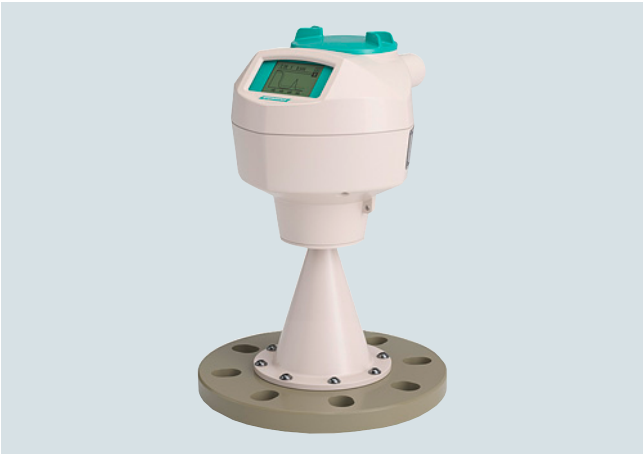

SITRANS LR250 Polypropylene lens antenna is a 25 GHz pulse radar level transmitter for continuous monitoring of liquids and slurries in storage and process vessels including corrosive materials to a range of 20 m (65.6 ft).

Benefits

- For use in chemical environments where aggressive and corrosive materials are present.
- Graphical local user interface (LUI) makes operation simple with plug-and-play setup using the intuitive Quick Start Wizard
- LUI displays echo profiles for diagnostic support
- Communication using HART, PROFIBUS PA, or FOUNDATION Fieldbus
- Process Intelligence signal processing for improved measurement reliability and Auto False-Echo Suppression of fixed obstructions
- Programming using infrared, Intrinsically Safe, handheld programmer or over a network using SIMATIC PDM, Emerson AMS, or Field Device Tools such as PACTware or Fieldcare via SITRANS DTM
- 3 mm (0.118 inch) accuracy in accordance with IEC 60770-1

Application

SITRANS LR250 includes a graphical local user interface (LUI) that improves setup and operation by including an intuitive Quick Start Wizard, and echo profile displays for diagnostic support. Startup is easy using the Quick Start wizard with a few parameters required for basic operation.

SITRANS LR250's unique design allows safe and simple programming using the Intrinsically Safe handheld programmer without having to open the instrument's lid.

- Key Applications: liquid bulk storage tanks, process vessels with agitators, vaporous liquids, corrosive and aggressive materials.

© Siemens 2020

Configuration

Installation of SITRANS LR250 Level Probing Radar

Note:
- Beam angle is the width of the cone where the energy density is half of the peak energy density.
- The peak energy density is directly in front of and in line with the antenna.
- There is a signal transmitted outside of the beam angle; therefore false targets may be detected.

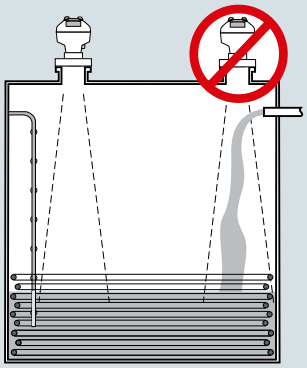

Polypropylene lens antenna

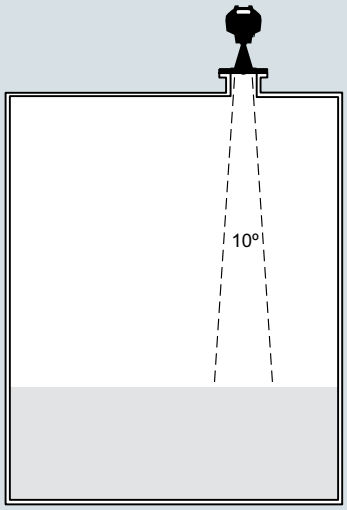

Mounting on vessel

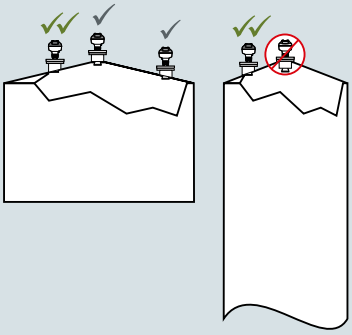

SITRANS LR250 Polypropylene lens antenna installation

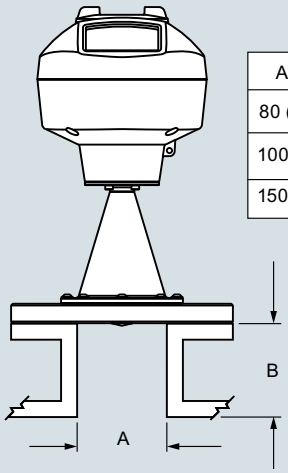

A	B
80 (3)	500 (20) max.
100 (4)	500 (20) max.
150 (6)	500 (20) max.

SITRANS LR250 Polypropylene lens antenna, mounting on a nozzle, dimensions in mm (inch)

© Siemens 2020

Technical specifications

Mode of operation	
Measuring principle	Radar level measurement
Frequency	K-band (25.0 GHz)
Minimum measuring range	50 mm (2 inch) from end of antenna
Maximum measuring range	20 m (66 ft)
Output	
HART	Version 5.1
• Analog output	4 ... 20 mA
• Accuracy	± 0.02 mA
• Fail-safe	• Programmable as high, low or, hold (loss of echo) • NE 43 programmable
PROFIBUS PA	Profile 3.1
• Function blocks	2 Analog Input (AI)
FOUNDATION Fieldbus	H1
• Functionality	Basic or LAS
• Version	ITK 5.2.0
• Function blocks	2 Analog Input (AI)
Performance (according to reference conditions IEC 60770-1)	
Maximum measured error	• > 500 mm from sensor reference point: 3 mm (0.118 inch) • < 500 mm from sensor reference point: 25 mm (1 inch)
Influence of ambient temperature	< 0.003 %/K
Rated operating conditions	
Installation conditions	
• Location	Indoor/outdoor
Ambient conditions (enclosure)	
• Ambient temperature	-40 ... +80 °C (-40 ... +176 °F)
• Storage temperature	-40 ... +80 °C (-40 ... +176 °F)
• Installation category	I
• Pollution degree	4
Medium conditions	
Dielectric constant ε_r	> 1.6
Process temperature	-40 ... +80 °C (-40 ... +176 °F) at process connection
Process pressure	Up to 5 bar g (72 psi g) temperature dependent.
Design	
Enclosure	
• Material	Aluminum, polyester powder-coated
• Cable inlet	2 x M20 x 1.5 or 2 x ½" NPT
Degree of protection	Type 4X/NEMA 4X, Type 6/NEMA 6, IP67, IP68
Weight	Polypropylene lens antenna with 3 inch (80 mm) polypropylene flange • Approximately 3.4 kg (7.5 lb)
Display (local)	Graphic local user interface including quick start wizard and echo profile display
Polypropylene lens antenna	
• Materials	• Polyester powder coated exterior • 3 inch cast aluminum • Polypropylene lens • FKM seal
• Process connections	
- Material	Polypropylene
- Dimensions	Universal flange: 3 inch (80 mm), 4 inch (100 mm), 6 inch (150 mm)

Power supply	
4 ... 20 mA/HART	Nominal 24 V DC (max. 30 V DC) with max. 550 Ω
PROFIBUS PA	• 15 mA • per IEC 61158-2
FOUNDATION Fieldbus	• 20.0 mA • per IEC 61158-2
Certificates and approvals	
General	$CSA_{US/C}$, CE, FM, RCM
Radio	FCC, Industry Canada, RED, RCM
Hazardous	
• Explosion Proof (Brazil)	INMETRO Ex d ia mb IIC T4 Ga/Gb, Ex ia ta IIIC T100 °C Da
• Increased Safety (Brazil)	INMETRO Ex e ia mb IIC T4 Ga/Gb, Ex ia ta IIIC T100 °C Da
• Intrinsically Safe (Brazil)	INMETRO Ex ia IIC T4 Ga, Ex ia ta IIIC T100 °C Da
• Explosion Proof (Canada/USA)	CSA/FM Class I, Div. 1, Groups A, B, C, D; Class II, Div. 1, Groups E, F, G; Class III T4
• Intrinsically Safe (Canada/USA)	CSA/FM Class I, Div. 1, Groups A, B, C, D; Class II, Div. 1, Groups E, F, G; Class III T4
• Non-incendive (Canada/USA)	CSA/FM Class I, Div. 2, Groups A, B, C, D T5
• Flame Proof/Increased Safety (China)	Ex d ia mb IIC T4 Ga/Gb, Ex e ia mb IIC T4 Ga/Gb, Ex iaD 20 T90 IP67 DIP A20 T_A90 °C
• Intrinsically Safe (China)	Ex ia IIC T4 Ga, Ex iaD 20 T90 IP67 DIP A20 T_A90 °C
• Non-sparking (China)	NEPSI Ex nA IIC T4 Gc
• Intrinsically Safe (Europe)	ATEX II 1G Ex ia IIC T4 Ga, ATEX II 1D Ex ia ta IIC T100 °C Da
• Non-sparking/Energy Limited (Europe)	ATEX II 3G Ex nA IIC T4 Gc
• Flame Proof (International/Europe)	IECEx/ATEX II ½ GD, 1D, 2D, Ex d mb ia IIC T4 Ga/Gb, Ex ia ta IIC T100 °C Da
• Increased Safety (International/Europe)	IECEx/ATEX II ½ GD, 1D, 2D, Ex e mb ia IIC T4 Ga/Gb, Ex ia ta IIIC T100 °C Da
• Intrinsically Safe (International)	IECEx/ATEX II 1 G Ex ia IIC T4 Ga, IECEX/ATEX II 1D Ex ia ta IIC T100 ° C Da
• Explosion Proof (Russia/Kazakhstan)	EAC Ex d
• Increased Safety (Russia/Kazakhstan)	EAC Ex e
• Intrinsically Safe (Russia/Kazakhstan)	EAC Ex ia
• Marine	• Lloyd's Register of Shipping • ABS Type Approval • Bureau Veritas
Programming	
Intrinsically Safe Siemens handheld programmer	Infrared receiver
• Approvals for handheld programmer	IS model: ATEX II 1 GD Ex ia IIC T4 Ga, Ex ia D 20 T135 °C T_a = -20 ... +50 °C, CSA/FM Class I, II, III, Div. 1, Groups A, B, C, D, E, F, G, T6, T_a = +50 °C, IECEx SIR 09.0073
Handheld communicator	HART communicator 375/475
PC	• SIMATIC PDM • Emerson AMS • SITRANS DTM (for connection into FDT, such as PACTware or Fieldcare)
Display (local)	Graphic local user interface including quick start wizard and echo profile displays.

© Siemens 2020

Selection and ordering data

	Article No.
SITRANS LR250 Radar level transmitter ↗	**7ML5431-**
Continuous, non-contact, 20 m (66 ft) range, for liquids and slurries.	■ ■ ■ ■ **0** - ■ ■ ■ ■
↗ Click on the Article No. for the online configuration in the PIA Life Cycle Portal.	
Process Connection and Antenna Material	
Painted aluminum 3" horn antenna[1]	**5**
Process Connection Type	
Engineered polymer flange connections	
Without flange, without mounting bracket, no polypropylene lens	**Q A**
Without flange, with mounting bracket, no polypropylene lens	**Q B**
Universal polymeric flange, flat face, with polypropylene lens, FKM seal	
DN80 PN16, ANSI 3", 150 lb, DN80 PN16/10K	**Q C**
DN100 PN16, ANSI 4", 150 lb, DN100 PN16/10K	**Q D**
DN150 PN16, ANSI 6", 150 lb, DN150 PN16/10K	**Q E**
Communication/Output	
PROFIBUS PA	**1**
4 ... 20 mA, HART, start-up at < 3.6 mA	**2**
FOUNDATION Fieldbus	**3**
Enclosure/Cable inlet	
Aluminum, Epoxy painted	
2 x ½" NPT	**0**
2 x M20 x 1.5	**1**
Antenna	
3 inch (80 mm) polypropylene lens antenna	**S**
Approvals	
General Purpose, CE, CSA, FM, FCC, RED, RCM	**A**
Intrinsically Safe: CSA/FM Class I, Div. 1, Groups A, B, C, D, Class II, Div. 1, Groups E, F, G, Class III T4 FCC, Industry Canada	**B**
Intrinsically Safe: IECEx/ATEX II 1 G Ex ia IIC T4 Ga, IECEx/ATEX II 1D Ex ia ta IIIC T100 °C Da, INMETRO Ex ia IIC T4 Ga, Ex ia ta IIIC T100 °C Da, CE, RED, RCM	**C**
Non-incendive: CSA/FM Class I, Div. 2, Groups A, B, C, D T5, FCC, Industry Canada	**D**
Non Sparking: ATEX II 3G Ex nA IIC T4 Gc, CE, RED, RCM	**E**
Increased Safety: IECEx/ATEX II ½ GD,1D, 2D Ex e mb ia IIC T4 Ga/Gb, Ex ia ta IIIC T100 °C Da, INMETRO Ex e ia mb IIC T4 Ga/Gb, Ex ia ta IIIC T100 °C Da, CE, RED, RCM[2]	**F**
Flameproof: IECEx/ATEX II ½ GD 1D, 2D Ex d mb ia IIC T4 Ga/Gb, Ex ia ta IIIC T100 °C Da, INMETRO Ex d ia mb IIC T4 Ga/Gb, Ex ia ta IIIC T100 °C Da, CE, RED, RCM[2]	**G**
Explosion proof: CSA/FM Class I, II and III, Div. 1, Groups A, B, C, D, E, F, G, FCC, Industry Canada[2]	**H**
Non Sparking: NEPSI Ex nA IIC T4 Gc	**K**
Intrinsically Safe: NEPSI Ex ia IIC T4 Ga, Ex iaD 20 T90 IP67 DIP A20 T_A90 °C	**L**
Flameproof: NEPSI Ex d ia mb IIC T4 Ga/Gb, Ex iaD 20 T90 IP67 DIP A20 T_A90 °C[2]	**M**
Increased Safety: NEPSI Ex e ia mb IIC T4 Ga/Gb, Ex iaD 20 T90 IP67 DIP A20 T_A90 °C[2]	**N**
Pressure rating	
0.5 bar (7.25 psi g) max.	**1**
Rating per Pressure/Temperature curves in manual[3]	**2**

	Order code
Further designs	
Please add "**-Z**" to Article No. and specify Order code(s).	
Plug M12, incl. cable socket, IP68[4)5)6)]	**A50**
Plug 7/8", incl. cable socket, IP68[5)6)7)]	**A55**
Long tag (device parameter, max. 27 characters) plate stainless steel 304/1.4301	**Y15**
Factory test certificate - M to DIN 55350, Part 18	**C11**
Inspection certificate 3.1 (EN 10204) - material of pressure-containing and wetted parts	**C12**
Namur NE43 compliant: device preset to failsafe < 3.6 mA[2]	**N07**
Operating Instructions	
All literature is available to download for free, in a range of languages, at	
http://www.siemens.com/processinstrumentation/documentation	
Accessories	Article No.
Mounting bracket suitable for wall or ceiling mounting, for aluminum painted horn versions only	**A5E46342367**
Polypropylene lens replacement kit, polypropylene lens antenna and polymeric flange versions	**A5E46342366**
One metallic cable gland M20 x 1.5, rated -40 ... +80 °C (-40 ... +176 °F), HART[9]	**7ML1930-1AP**
One metallic cable gland M20 x 1.5, rated -40 ... +80 °C (-40 ... +176 °F), PROFIBUS PA and FOUNDATION Fieldbus	**7ML1930-1AQ**
Handheld programmer, Intrinsically safe, EEx ia	**7ML1930-1BK**
HART modem/USB (for use with a PC and SIMATIC PDM)	**7MF4997-1DB**
FDA approved FKM o-ring for 2" G (BSPP) process connections -28 ... +80 °C (-28 ... +176 °F)	**7ML1830-3AN**
SITRANS RD100, loop powered display - see Chapter 7	**7ML5741-.....-.**
SITRANS RD150, remote digital display for 4 ... 20 mA and HART devices - see Chapter 7	**7ML5742-.....-....**
SITRANS RD200, universal input display with Modbus conversion - see Chapter 7	**7ML5740-.....-..**
SITRANS RD300, dual line display with totalizer and linearization curve and Modbus conversion - see Chapter 7	**7ML5744-.....-..**
For applicable back up point level switch - see point level measurement section	

1) Available only with Process connection options QA ... QE and Antenna option S.
2) Available only with Communication option 2 and Process connection and antenna material option 4.
3) Available only with Process connection and Antenna material option 5 and Process connection type option QC.
4) Available only with Enclosure option 1.
5) Available only with Communication options 1 and 3.
6) Available only with Approval options A, B, C, and L.
7) Available only with Enclosure option 0.
8) Available only with Approval options A, B, C, D, E, K, and L.
9) Product shipped with plastic cable gland, rated to -20 °C (-4 °F). If -40 °C (-40 °F) rating required, then metallic cable gland is recommended.

© Siemens 2020

Selection and ordering data

SITRANS LR250 Polypropylene Lens Antenna Specials

	Article No.
SITRANS LR250 threaded PVDF antenna version enclosures (PROFIBUS PA models)	
SITRANS LR250 threaded PVDF antenna version enclosure with board stack, M20 cable inlet, approval option A, with PROFIBUS PA communication, no process connection	**A5E03588171**
SITRANS LR250 threaded PVDF antenna version enclosure with board stack, NPT cable inlet, approval option A, with PROFIBUS PA communication, no process connection	**A5E03588253**
SITRANS LR250 threaded PVDF antenna version enclosure with board stack, NPT cable inlet, approval option B, with PROFIBUS PA communication, no process connection	**A5E03588512**
SITRANS LR250 threaded PVDF antenna version enclosure with board stack, M20 cable inlet, approval option C, with PROFIBUS PA communication, no process connection	**A5E03589260**
SITRANS LR250 threaded PVDF antenna version enclosure with board stack, NPT cable inlet, approval option D, with PROFIBUS PA communication, no process connection	**A5E03589262**
SITRANS LR250 threaded PVDF antenna version enclosure with board stack, M20 cable inlet, approval option E, with PROFIBUS PA communication, no process connection	**A5E03589264**
SITRANS LR250 threaded PVDF antenna version enclosures (FOUNDATION Fieldbus models)	
SITRANS LR250 enclosure with board stack, M20 cable inlet, approval option A, with FOUNDATION Fieldbus communication, no process connection	**A5E03589266**
SITRANS LR250 enclosure with board stack, NPT cable inlet, approval option A, with FOUNDATION Fieldbus communication, no process connection	**A5E03589275**
SITRANS LR250 enclosure with board stack, NPT cable inlet, approval option B, with FOUNDATION Fieldbus communication, no process connection	**A5E03589277**
SITRANS LR250 enclosure with board stack, M20 cable inlet, approval option C, with FOUNDATION Fieldbus communication, no process connection	**A5E03589280**
SITRANS LR250 enclosure with board stack, NPT cable inlet, approval option D, with FOUNDATION Fieldbus communication, no process connection	**A5E03589281**
SITRANS LR250 enclosure with board stack, M20 cable inlet, approval option E, with FOUNDATION Fieldbus communication, no process connection	**A5E03589283**

	Article No.
SITRANS LR250 threaded PVDF antenna version enclosures (< 3.6 mA start-up HART models)	
SITRANS LR250 enclosure with board stack, M20 cable inlet, approval option A, with HART communication start-up at < 3.6 mA, no process connection	**A5E03569747**
SITRANS LR250 enclosure with board stack, NPT cable inlet, approval option A, with HART communication start-up at < 3.6 mA, no process connection	**A5E03586807**
SITRANS LR250 enclosure with board stack, NPT cable inlet, approval option B, with HART communication start-up at < 3.6 mA, no process connection	**A5E03586854**
SITRANS LR250 enclosure with board stack, M20 cable inlet, approval option C, with HART communication start-up at < 3.6 mA, no process connection	**A5E03586887**
SITRANS LR250 enclosure with board stack, NPT cable inlet, approval option D, with HART communication start-up at < 3.6 mA, no process connection	**A5E03586961**
SITRANS LR250 enclosure with board stack, M20 cable inlet, approval option E, with HART communication start-up at < 3.6 mA, no process connection	**A5E03587012**
SITRANS LR250 enclosure with board stack, M20 cable inlet, approval option F, with HART communication start-up at < 3.6 mA, no process connection	**A5E03587132**
SITRANS LR250 enclosure with board stack, M20 cable inlet, approval option G, with HART communication start-up at < 3.6 mA, no process connection	**A5E03587223**
SITRANS LR250 enclosure with board stack, NPT cable inlet, approval option H, with HART communication start-up at < 3.6 mA, no process connection	**A5E03588125**
SITRANS LR250 threaded PVDF antenna kits	
Antenna kit 2" NPT threaded PVDF	**A5E03528941**
Antenna kit 2" R (BSPT) threaded PVDF	**A5E03528943**
Antenna kit 2" G (BSPP) threaded PVDF	**A5E03528947**
Kit of hardware parts for LR250 threaded PVDF antenna: consists of O-rings, screws, wavewasher, and loctite	**A5E03528948**
Ex-proof plugs	
Ex-proof plugs kit, 1/2" NPT, qty 5	**A5E39979991**
Ex-proof plugs kit, M20, qty 5	**A5E39979992**

© Siemens 2020

Options

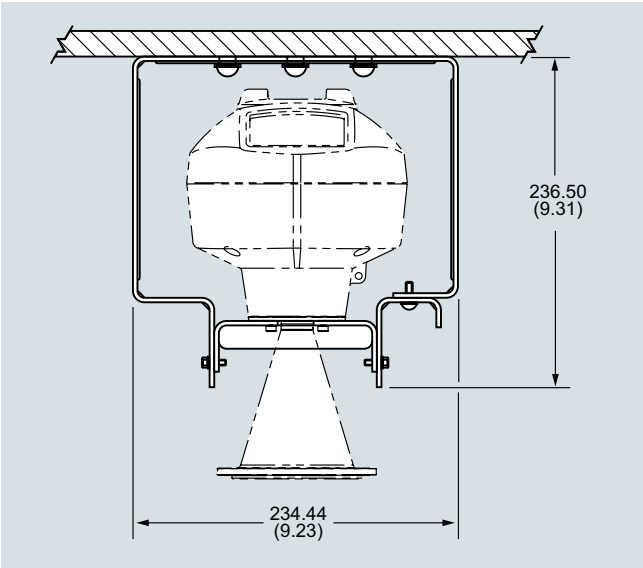

SITRANS LR250 Polypropylene lens antenna, wall/ceiling mount

Dimensional drawings

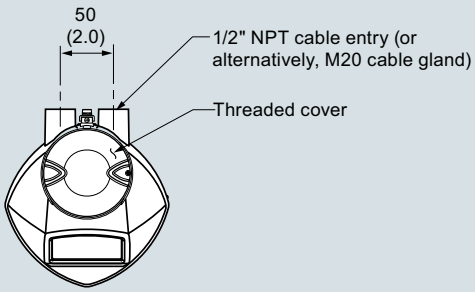

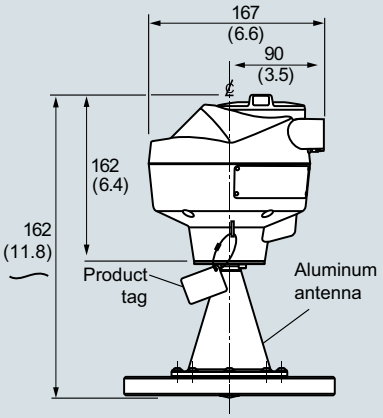

Nominal pipe size	OD ± 1	B.C.D. max. for slotted holes (bmax.) ± 0.75	B.C.D. min. for slotted holes (bmin.) ± 0.75	Bolt hole radius ± 0.25	Number of slotted holes
3	200	160	150	R 9.5	8
4	229	191	175	R 9.5	8
6	285	242	240	R 11.5	8

Polypropylene Flange

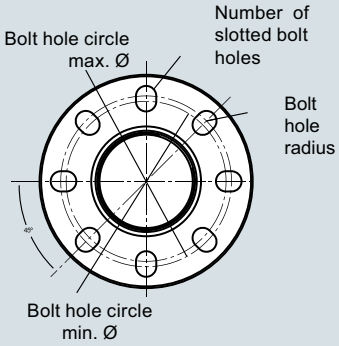

SITRANS LR250 Polypropylene lens antenna, dimensions in mm (inch)

© Siemens 2020

Dimensional drawings (continued)

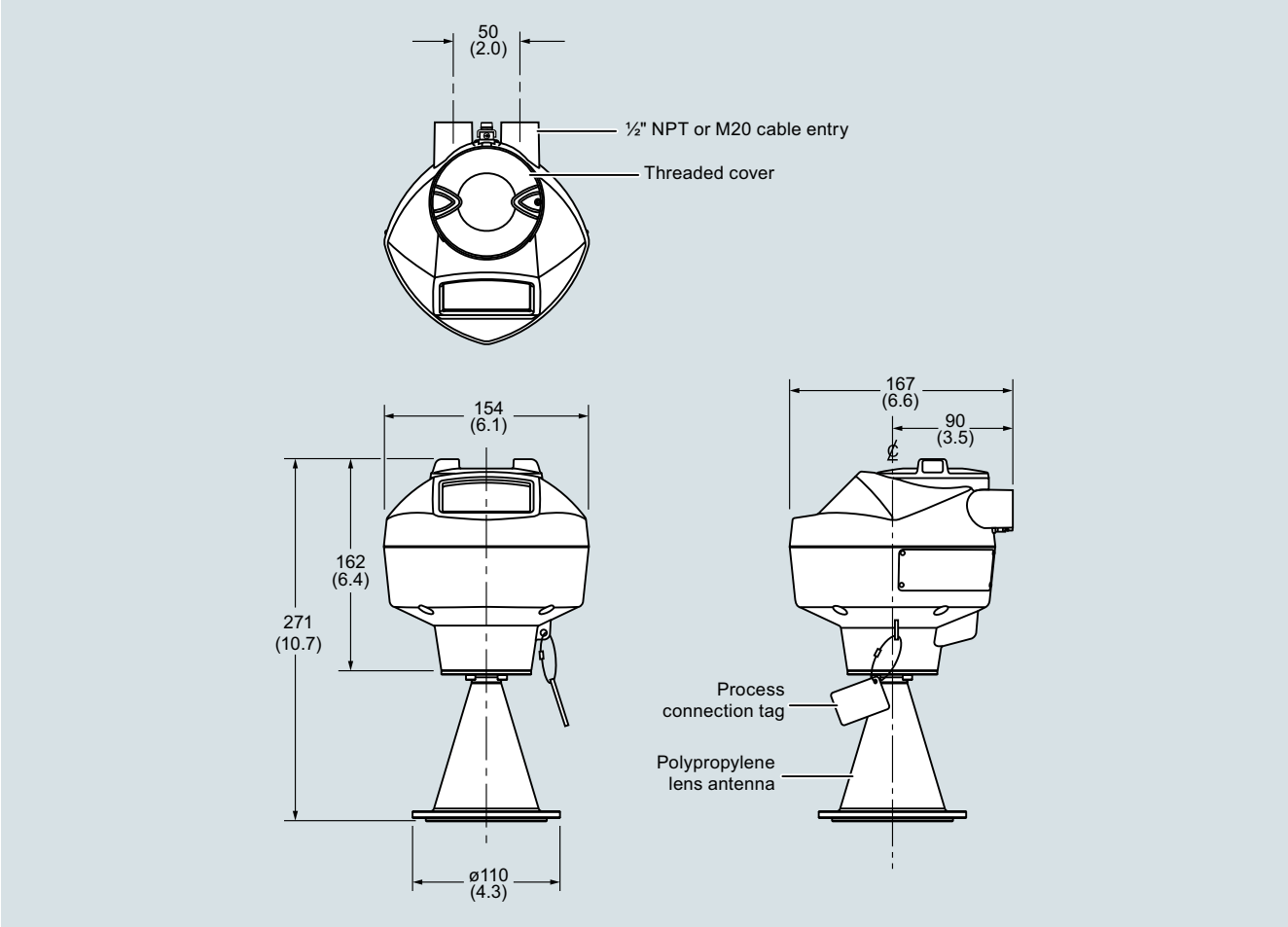

SITRANS LR250 Polypropylene lens antenna, dimensions in mm (inch)

© Siemens 2020

Dimensional drawings (continued)

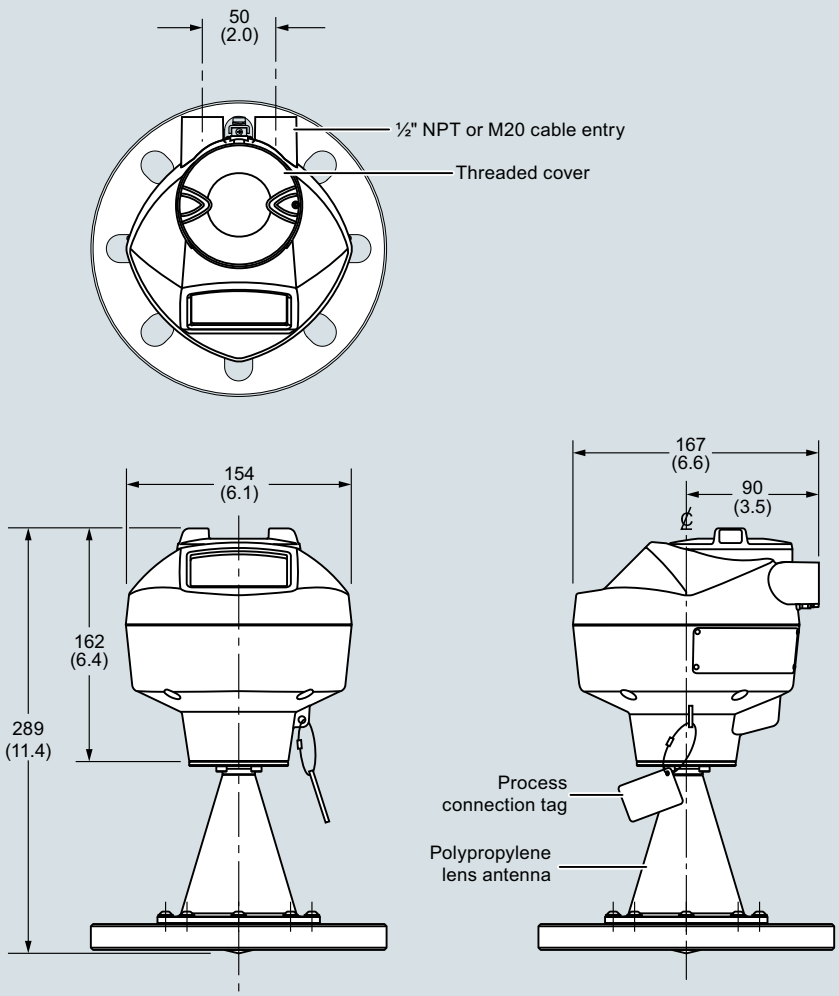

Universal polymeric flange

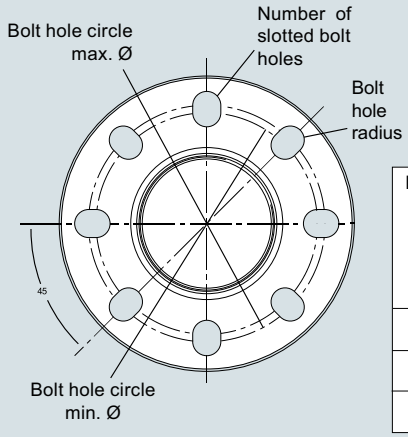

Nominal pipe size	OD ± 1	B.C.D. max. for slotted holes (bmax.) ± 0.75	B.C.D. min. for slotted holes (bmin.) ± 0.75	Bolt hole radius ± 0.25	# of slotted holes
3 (80)	7.87 (200)	6.30 (160)	5.91 (150)	0.37 (9.5)	8
4 (100)	9.00 (229)	17.52 (191)	6.89 (175)	0.37 (9.5)	8
6 (150)	11.22 (285)	9.53 (242)	9.45 (140)	0.45 (11.5)	8

SITRANS LR250 Polypropylene lens antenna with universal polymeric flange, dimensions in mm (inch)

© Siemens 2020

Circuit diagrams

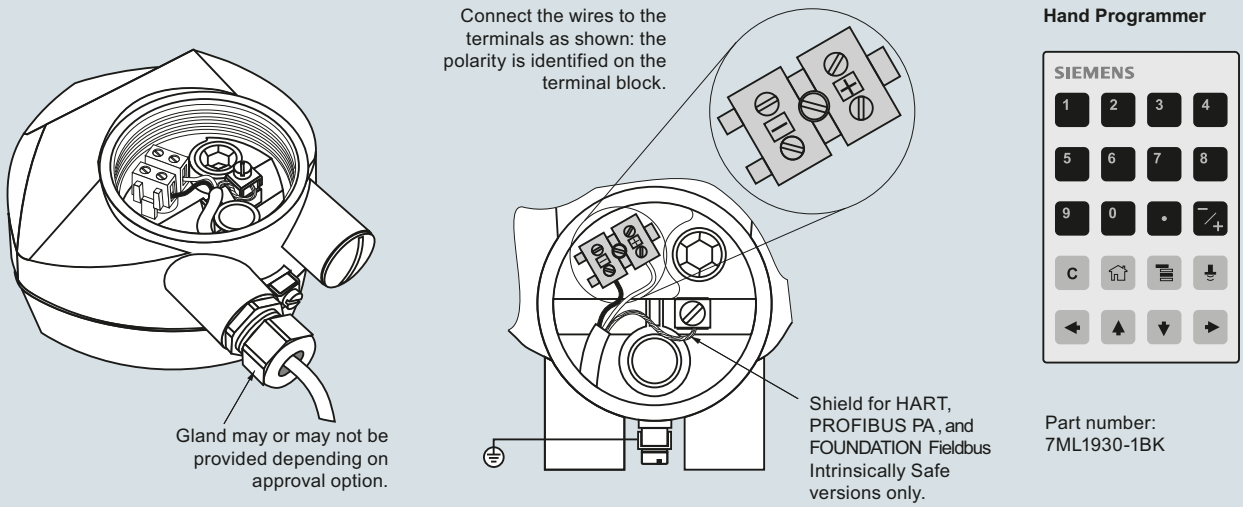

Notes:

1. DC terminal shall be supplied from a source providing electrical isolation between the input and output, to meet the applicable safety requirements of IEC 61010-1.
2. All field wiring must have insulation suitable for rated input voltages.
3. Use shielded twisted pair cable (14 ... 22 AWG) for HART version.
4. Separate cables and conduit may be required to conform to standard instrumentation wiring practices or electrical codes.

SITRANS LR250 connections

© Siemens 2020

Overview

SITRANS LR250 with flanged encapsulated antenna is a 2-wire, 25 GHz pulse radar level transmitter for continuous monitoring of liquids and slurries in storage and process vessels including corrosives or aggressive materials, to a range of 20 m (66 ft) (antenna dependent).

Benefits

- Fully encapsulated horn antenna design with FDA approved TFM 1600 PTFE lens for use in chemical and sanitary environments where aggressive and corrosive materials are used
- Cost effective replacement for transmitters made of exotic materials
- Graphical local user interface (LUI) makes operation simple with plug-and-play setup using the intuitive Quick Start Wizard
- LUI displays echo profiles for diagnostic support
- 25 GHz high frequency and 50 mm (2 inch) process connection/antenna allow for easy mounting
- Insensitive to mounting location and obstructions, and less sensitive to nozzle interference
- Short blanking distance for improved minimum measuring range to 50 mm (2 inch) from the end of the antenna
- Communication using HART, PROFIBUS PA, or FOUNDATION Fieldbus
- Process Intelligence signal processing for improved measurement reliability and Auto False-Echo Suppression of fixed obstructions
- Programming using infrared Intrinsically Safe handheld programmer or over a network using SIMATIC PDM, Emerson AMS, or Field Device Tools such as PACTware or Fieldcare via SITRANS DTM
- Functional Safety (SIL 2). Device suitable for use in accordance with IEC 61508 and IEC 61511
- Suitable for API 2350

Application

SITRANS LR250 includes a graphical local user interface (LUI) that improves setup and operation by including an intuitive Quick Start Wizard, and echo profile displays for diagnostic support. Startup is easy using Quick Start Wizard with a few parameters required for basic operation.

The 25 GHz frequency creates a narrow, focused beam allowing for smaller antenna options and decreasing sensitivity to obstructions.

SITRANS LR250's unique design allows safe and simple programming using the Intrinsically Safe handheld programmer without having to open the instrument's lid.

SITRANS LR250 measures superbly in small vessels and in tanks/vessels up to 20 m (66 ft) on materials with dk > 1.6.

- Key Applications: liquid bulk storage tanks, process vessels with agitators, vaporous liquids, temperatures to 170 °C (338 °F), corrosive and aggressive materials and applications where ease of cleaning is required such as food or fine chemicals

Configuration

Installation

Note:
- Beam angle is the width of the cone where the energy density is half of the peak energy density.
- The peak energy density is directly in front of and in line with the antenna.
- There is a signal transmitted outside of the beam angle; therefore false targets may be detected.

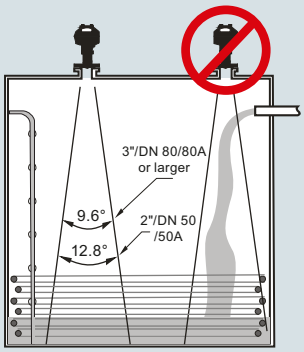

Mounting on bypass

Orient front or back of device toward vent.

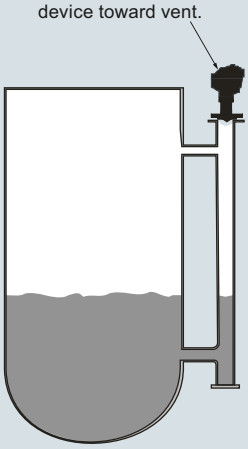

Mounting on stilling well

Orient front or back of device toward stillpipe slots.

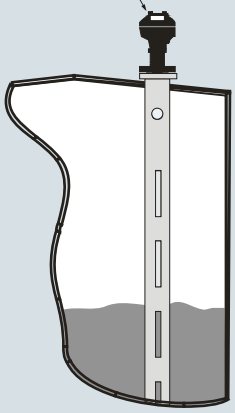

Mounting on vessel

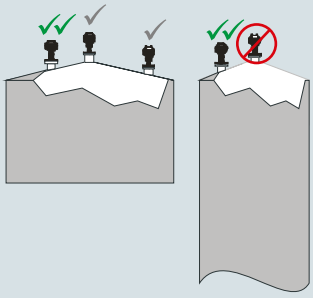

Mounting on a nozzle

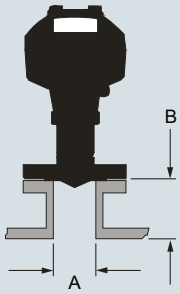

A	B*
ø 50 (2)	500 (20) max.
ø 80 (3)	500 (20) max.
ø 100 (4)	500 (20) max.
ø 150 (6)	500 (20) max.

*Reference conditions

SITRANS LR250 Flanged Encapsulated Antenna installation, dimensions in mm (inch)

© Siemens 2020

Technical specifications

Mode of operation	
Measuring principle	Radar level measurement
Frequency	K-band (25.0 GHz)
Minimum measuring range	50 mm (2 inch) from end of antenna
Maximum measuring range	20 m (66 ft)
Output	
HART	Version 5.1
• Analog output	4 ... 20 mA
• Accuracy	± 0.02 mA
• Fail-safe	• Programmable as high low or hold (loss of echo) • NE 43 programmable
PROFIBUS PA	Profile 3.01
• Function blocks	2 Analog Input (AI)
FOUNDATION Fieldbus	H1
• Functionality	Basic or LAS
• Version	ITK 5.2.0
• Function blocks	2 Analog Input (AI)
Performance (according to reference conditions IEC60770-1)	
Maximum measured error	• > 500 mm from sensor reference point: 3 mm (0.118 inch) • < 500 mm from sensor reference point: 25 mm (1 inch)
Influence of ambient temperature	< 0.003 %/K
Rated operating conditions	
Installation conditions	
• Location	Indoor/outdoor
Ambient conditions (enclosure)	
• Ambient temperature	-40 ... +80 °C (-40 ... +176 °F)
• Storage temperature	-40 ... +80 °C (-40 ... +176 °F)
• Installation category	I
• Pollution degree	4
Medium conditions	
Dielectric constant ε_r	≥ 1.6 (antenna dependent)
Process temperature	-40 ... +170 °C (-40 ... +338 °F) at process connection
Process pressure	See Pressure/Temperature curves for more information (page 4/233)
Design	
Enclosure	
• Material	Aluminum, polyester powder-coated
• Cable inlet	2 x M20 x 1.5 or 2 x ½" NPT
Degree of protection	Type 4X/NEMA 4X, Type 6/NEMA 6, IP67, IP68
Weight (dependent on process connection)	• Approx. 7 kg (15.43 lb) for 2" Class 150 ASME B16.5 raised face flange (smallest size) • Approx. 17.7 kg (39.02 lb) for 6" Class 150 ASME B16.5 raised face flange (largest size)
Display (local)	Graphic local user interface including quick start wizard and echo profile display
Antenna	
• Material	Stainless Steel 316L (1.4435 or 1.4404) and TFM 1600 PTFE Lens (lens is the only wetted part)
• Dimensions (nominal sizes)	48 mm (2 inch), 80 mm (3 inch), 100 mm (4 inch), 150 mm (6 inch)
Process connections	
Flanged connection	Raised Face • 2, 3, 4, 6" Class 150 ASME B16.5 • 50A, 80A, 100A, 150A 10K JIS B 2220 • DN 50, DN 80, DN 100 & DN 150 PN 10/16 EN 1092-1 type B1

Power supply	
4 ... 20 mA/HART	Nominal 24 V DC (max. 30 V DC) with max. 550 Ω
PROFIBUS PA	• 15 mA • Per IEC 61158-2
FOUNDATION Fieldbus	• 20.0 mA • Per IEC 61158-2
Certificates and approvals	
General	$CSA_{US/C}$, CE, FM, RCM
Radio	FCC, Industry Canada, RED, RCM
Hazardous	
• Explosion Proof (Brazil)	INMETRO Ex d ia mb IIC T4 Ga/Gb, Ex ia ta IIIC T100 °C Da
• Increased Safety (Brazil)	INMETRO Ex e ia mb IIC T4 Ga/Gb, Ex ia ta IIIC T100 °C Da
• Intrinsically Safe (Brazil)	INMETRO Ex ia IIC T4 Ga, Ex ia ta IIIC T100 °C Da
• Explosion Proof (Canada/USA)	CSA/FM Class I, Div. 1, Groups A, B, C, D; Class II, Div. 1, Groups E, F, G; Class III T4
• Intrinsically Safe (Canada/USA)	CSA/FM Class I, Div. 1, Groups A, B, C, D; Class II, Div. 1, Groups E, F, G; Class III T4
• Non-incendive (Canada/USA)	CSA/FM Class I, Div. 2, Groups A, B, C, D T5
• Flame Proof/Increased Safety (China)	NEPSI Ex d ia mb IIC T4 Ga/Gb, Ex e ia mb IIC T4 Ga/Gb, Ex iaD tD A20 IP67 T100 °C
• Intrinsically Safe (China)	NEPSI Ex ia IIC T4 Ga, Ex iaD tD A20 IP67 T100 °C
• Non-sparking/Energy Limited (China)	NEPSI Ex nA IIC T4 Gc
• Intrinsically Safe (Europe)	ATEX II 1G Ex ia IIC T4 Ga ATEX II 1D Ex ia ta IIIC T100 °C Da
• Non-sparking/Energy Limited (Europe)	ATEX II 3G Ex nA IIC T4 Gc
• Flame Proof (International/Europe)	IECEx/ATEX II 1/2 GD, 1D, 2D Ex d mb ia IIC T4 Ga/Gb, Ex ia ta IIC T100 °C Da
• Increased Safety (International/Europe)	IECEx/ATEX II 1/2 GD, 1D, 2D, Ex e mb ia IIC T4 Ga/Gb, Ex ia ta IIIC T100 °C Da
• Intrinsically Safe (International)	IECEx/ATEX II 1 G Ex ia IIC T4 Ga, IECEx/ATEX II 1D Ex ia ta IIIC T100 °C Da
• Explosion Proof (Russia/Kazakhstan)	EAC Ex d
• Increased Safety (Russia/Kazakhstan)	EAC Ex e
• Intrinsically Safe (Russia/Kazakhstan)	EAC Ex ia
• Marine	• Lloyd's Register of Shipping • ABS Type Approval • Bureau Veritas
• Functional Safety	SIL-2 suitable in accordance with IEC 61508/61511
Programming	
Intrinsically Safe Siemens handheld programmer	Infrared receiver
• Approvals for handheld-programmer	IS model: ATEX II 1 GD Ex ia IIC T4 Ga Ex ia D 20 T135 °C T_a = -20 ... +50 °C CSA/FM Class I, II, III, Div. 1, Groups A, B, C, D, E, F, G, T6 T_a = 50 °C IECEx SIR 09.0073
Handheld communicator	HART communicator 375/475
PC	• SIMATIC PDM • Emerson AMS • SITRANS DTM (for connection into FDT such as PACTware or Fieldcare)
Display (local)	Graphic local user interface including quick start wizard and echo profile displays

© Siemens 2020

Selection and ordering data

	Article No.
SITRANS LR250 Radar level transmitter with encapsulated horn and PTFE lens ↗	**7ML5432-** ■■■■0-■■■■
Continuous, non-contact, 20 m (66 ft) range, for liquids and slurries in the chemical industry.	
↗ Click on the Article No. for the online configuration in the PIA Life Cycle Portal.	
Process Connection Material	
Stainless steel 1.4404/1.4435	0
Process Connection Type	
Flanged Process Connection Types (stainless steel 1.4404/1.4435)	
2" Class 150 ASME B16.5 raised face[1]	BF
3" Class 150 ASME B16.5 raised face	BG
4" Class 150 ASME B16.5 raised face	BH
6" Class 150 ASME B16.5 raised face	BJ
50A 10K JIS B 2220 raised face[1]	FD
80A 10K JIS B 2220 raised face	FE
100A 10K JIS B 2220 raised face	FF
150A 10K JIS B 2220 raised face	FG
DN 50 PN 10/16 EN 1092-1 type B1 raised face[1]	GA
DN 80 PN 10/16 EN 1092-1 type B1 raised face	GB
DN 100 PN 10/16 EN 1092-1 type B1 raised face	GC
DN 150 PN 10/16 EN 1092-1 type B1 raised face	GD
Communication/Output	
PROFIBUS PA	1
4 ... 20 mA, HART, start-up at < 3.6 mA	2
FOUNDATION Fieldbus	3
Enclosure/Cable inlet	
Aluminum, Epoxy painted	
2 x ½" NPT	0
2 x M20 x 1.5	1
Antenna lens material	
TFM 1600 PTFE Flush Lens	A
Approvals	
General Purpose, CE, CSA, FM, FCC, RED, RCM	A
Intrinsically Safe: CSA/FM Class I, Div. 1, Groups A, B, C, D, Class II, Div. 1, Groups E, F, G, Class III T4 FCC, Industry Canada	B
Intrinsically Safe: IECEx/ATEX II 1 G Ex ia IIC T4 Ga, IECEx/ATEX II 1D Ex ia ta IIIC T100 °C Da, INMETRO Ex ia IIC T4 Ga, Ex ia ta IIIC T100 °C Da, CE, RED, RCM	C
Non-incendive: CSA/FM Class I, Div. 2, Groups A, B, C, D T5, FCC, Industry Canada	D
Non Sparking: ATEX II 3G Ex nA IIC T4 Gc, CE, RED, RCM	E
Increased Safety: IECEx/ATEX II 1/2 GD,1D, 2D Ex e mb ia IIC T4 Ga/Gb, Ex ia ta IIIC T100 °C Da, INMETRO Ex e ia mb IIC T4 Ga/Gb, Ex ia ta IIIC T100 °C Da, CE, RED, RCM[2]	F
Flameproof: IECEx/ATEX II 1/2 GD 1D, 2D Ex d mb ia IIC T4 Ga/Gb, Ex ia ta IIIC T100 °C Da, INMETRO Ex d ia mb IIC T4 Ga/Gb, Ex ia ta IIIC T100 °C Da, CE, RED, RCM[2]	G
Explosion proof: CSA/FM Class I, II and III, Div. 1, Groups A, B, C, D, E, F, G, FCC, Industry Canada[2]	H
Non Sparking: NEPSI Ex nA IIC T4 Gc	K
Intrinsically Safe: NEPSI Ex ia IIC T4 Ga, Ex iaD tD A20 IP67 T100 °C	L
Flameproof: NEPSI Ex d ia mb IIC T4 Ga/Gb, Ex iaD tD A20 IP67 T100 °C[2]	M
Increased Safety: NEPSI Ex e ia mb IIC T4 Ga/Gb, Ex iaD tD A20 IP67 T100 °C[2]	N
Pressure rating	
Rating per Pressure/Temperature curves in instruction manual	0

[1] Maximum range 10 m (32.8 ft), dk > 3 [20 m (66 ft)] and dk > 1.6 when mounted in stillpipe].

[2] Applicable with communication option 2 only.

	Order code
Further designs	
Please add "**-Z**" to Article No. and specify Order code(s).	
Plug M12 with mating Connector[1)2)3)]	**A50**
Plug 7/8" with mating Connector[2)3)4)]	**A55**
Stainless steel tag [69 x 50 mm (2.71 x 1.97 inch)]: Measuring-point number/identification (max. 27 characters); specify in plain text	**Y15**
Manufacturer's test certificate: M to DIN 55350, Part 18 and to ISO 9000	**C11**
Material inspection Certificate Type 3.1 per EN 10204	**C12**
Functional Safety (SIL 2). Device suitable for use in accordance with IEC 61508 and IEC 61511[5)6)]	**C20**
Namur NE43 compliant, device preset to failsafe < 3.6 mA[5)]	**N07**
Operating Instructions	
All literature is available to download for free, in a range of languages, at	
http://www.siemens.com/processinstrumentation/documentation	
Accessories	Article No.
Handheld programmer, Intrinsically safe, EEx ia	**7ML1930-1BK**
HART modem/USB (for use with a PC and SIMATIC PDM)	**7MF4997-1DB**
One metallic cable gland M20 x 1.5, rated -40 ... +80 °C (-40 ... +176 °F), HART (2 are required)[6)]	**7ML1930-1AP**
One metallic cable gland M20 x 1.5, rated -40 ... +80 °C (-40 ... +176 °F), PROFIBUS PA and FOUNDATION Fieldbus (2 are required)[2)]	**7ML1930-1AQ**
SITRANS RD100, loop powered display - see Chapter 7	**7ML5741-.....-.**
SITRANS RD150, remote digital display for 4 ... 20 mA and HART devices - see Chapter 7	**7ML5742-.....-....**
SITRANS RD200, universal input display with Modbus conversion - see Chapter 7	**7ML5740-.....-..**
SITRANS RD300, dual line display with totalizer and linearization curve and Modbus conversion - see Chapter 7	**7ML5744-.....-..**
For applicable back up point level switch - see point level measurement section	

[1)] Available with enclosure option 1 only.

[2)] Available with communication options 1 and 3 only.

[3)] Available with approval options A, B, C, and L only.

[4)] Available with enclosure option 0 only.

[5)] Applicable with communication option 2 only.

[6)] Available with approval options A, B, C, D, E, K, and L only.

© Siemens 2020

Selection and ordering data

SITRANS LR250 flanged encapsulated Specials

	Article No.
SITRANS LR250 flanged encapsulated antenna version enclosures (PROFIBUS PA models)	
SITRANS LR250 flanged encapsulated antenna version (7ML5432) enclosure with board stack, M20 cable inlet, approval option A, with PROFIBUS PA communication, no process connection	**A5E32462853**
SITRANS LR250 flanged encapsulated antenna version (7ML5432) enclosure with board stack, NPT cable inlet, approval option A, with PROFIBUS PA communication, no process connection	**A5E32462854**
SITRANS LR250 flanged encapsulated antenna version (7ML5432) enclosure with board stack, NPT cable inlet, approval option B, with PROFIBUS PA communication, no process connection	**A5E32462855**
SITRANS LR250 flanged encapsulated antenna version (7ML5432) enclosure with board stack, M20 cable inlet, approval option C, with PROFIBUS PA communication, no process connection	**A5E32462856**
SITRANS LR250 flanged encapsulated antenna version (7ML5432) enclosure with board stack, NPT cable inlet, approval option D, with PROFIBUS PA communication, no process connection	**A5E32462857**
SITRANS LR250 flanged encapsulated antenna version (7ML5432) enclosure with board stack, M20 cable inlet, approval option E, with PROFIBUS PA communication, no process connection	**A5E32462858**
SITRANS LR250 flanged encapsulated antenna version enclosures (FOUNDATION Fieldbus models)	
SITRANS LR250 flanged encapsulated antenna version (7ML5432) enclosure with board stack, M20 cable inlet, approval option A, with FOUNDATION Fieldbus communication, no process connection	**A5E32462859**
SITRANS LR250 flanged encapsulated antenna version (7ML5432) enclosure with board stack, NPT cable inlet, approval option A, with FOUNDATION Fieldbus communication, no process connection	**A5E32462860**
SITRANS LR250 flanged encapsulated antenna version (7ML5432) enclosure with board stack, NPT cable inlet, approval option B, with FOUNDATION Fieldbus communication, no process connection	**A5E32462861**
SITRANS LR250 flanged encapsulated antenna version (7ML5432) enclosure with board stack, M20 cable inlet, approval option C, with FOUNDATION Fieldbus communication, no process connection	**A5E32462862**
SITRANSLR250 flanged encapsulated antenna version (7ML5432) enclosure with board stack, NPT cable inlet, approval option D, with FOUNDATION Fieldbus communication, no process connection	**A5E32462863**
SITRANS LR250 flanged encapsulated antenna version (7ML5432) enclosure with board stack, M20 cable inlet, approval option E, with FOUNDATION Fieldbus communication, no process connection	**A5E32462864**

	Article No.
SITRANS LR250 flanged encapsulated antenna version enclosures (< 3.6 mA start-up HART models)	
SITRANS LR250 flanged encapsulated antenna version (7ML5432) enclosure with board stack, M20 cable inlet, approval option A, with HART communication start-up at < 3.6 mA, no process connection	**A5E32462865**
SITRANS LR250 flanged encapsulated antenna version (7ML5432) enclosure with board stack, NPT cable inlet, approval option A, with HART communication start-up at < 3.6 mA, no process connection	**A5E32462866**
SITRANS LR250 flanged encapsulated antenna version (7ML5432) enclosure with board stack, NPT cable inlet, approval option B, with HART communication start-up at < 3.6 mA, no process connection	**A5E32462867**
SITRANS LR250 flanged encapsulated antenna version (7ML5432) enclosure with board stack, M20 cable inlet, approval option C, with HART communication start-up at < 3.6 mA, no process connection	**A5E32462868**
SITRANS LR250 flanged encapsulated antenna version (7ML5432) enclosure with board stack, NPT cable inlet, approval option D, with HART communication start-up at < 3.6 mA, no process connection	**A5E32462869**
SITRANS LR250 flanged encapsulated antenna version (7ML5432) enclosure with board stack, M20 cable inlet, approval option E, with HART communication start-up at < 3.6 mA, no process connection	**A5E32462830**
SITRANS LR250 flanged encapsulated antenna version (7ML5432) enclosure with board stack, M20 cable inlet, approval option F, with HART communication start-up at < 3.6 mA, no process connection	**A5E32462831**
SITRANS LR250 flanged encapsulated antenna version (7ML5432) enclosure with board stack, M20 cable inlet, approval option G, with HART communication start-up at < 3.6 mA, no process connection	**A5E32462832**
SITRANS LR250 flanged encapsulated antenna version (7ML5432) enclosure with board stack, NPT cable inlet, approval option H, with HART communication start-up at < 3.6 mA, no process connection	**A5E32462833**

© Siemens 2020

Selection and ordering data	Article No.
SITRANS LR250 flanged encapsulated antenna lens kits	
Replacement TFM 1600 Lens and Spring Washer Kit for 2 inch Class 150 ASME B16.5 raised faced	**A5E32462817**
Replacement TFM 1600 Lens and Spring Washer Kit for 3 inch Class 150 ASME B16.5 raised faced	**A5E32462819**
Replacement TFM 1600 Lens and Spring Washer Kit for 4 inch Class 150 ASME B16.5 raised faced	**A5E32462820**
Replacement TFM 1600 Lens and Spring Washer Kit for 6 inch Class 150 ASME B16.5 raised faced	**A5E32462821**
Replacement TFM 1600 Lens and Spring Washer Kit for 50A 10K JIS B 2220 raised Face	**A5E32462822**
Replacement TFM 1600 Lens and Spring Washer Kit for 80A 10K JIS B 2220 raised Face	**A5E32462823**
Replacement TFM 1600 Lens and Spring Washer Kit for 100A 10K JIS B 2220 raised Face	**A5E32462824**
Replacement TFM 1600 Lens and Spring Washer Kit for 150A 10K JIS B 2220 raised Face	**A5E32462825**
Replacement TFM 1600 Lens and Spring Washer Kit for DN50 PN10/16 EN 1092-1 type B1 raised face	**A5E32462826**
Replacement TFM 1600 Lens and Spring Washer Kit for DN80 PN10/16 EN 1092-1 type B1 raised face	**A5E32462827**
Replacement TFM 1600 Lens and Spring Washer Kit for DN100 PN10/16 EN 1092-1 type B1 raised face	**A5E32462828**
Replacement TFM 1600 Lens and Spring Washer Kit for DN150 PN10/16 EN 1092-1 type B1 raised face	**A5E32462829**
Ex-proof plugs	
Ex-proof plugs kit, 1/2" NPT, qty 5	**A5E39979991**
Ex-proof plugs kit, M20, qty 5	**A5E39979992**

© Siemens 2020

Characteristic curves

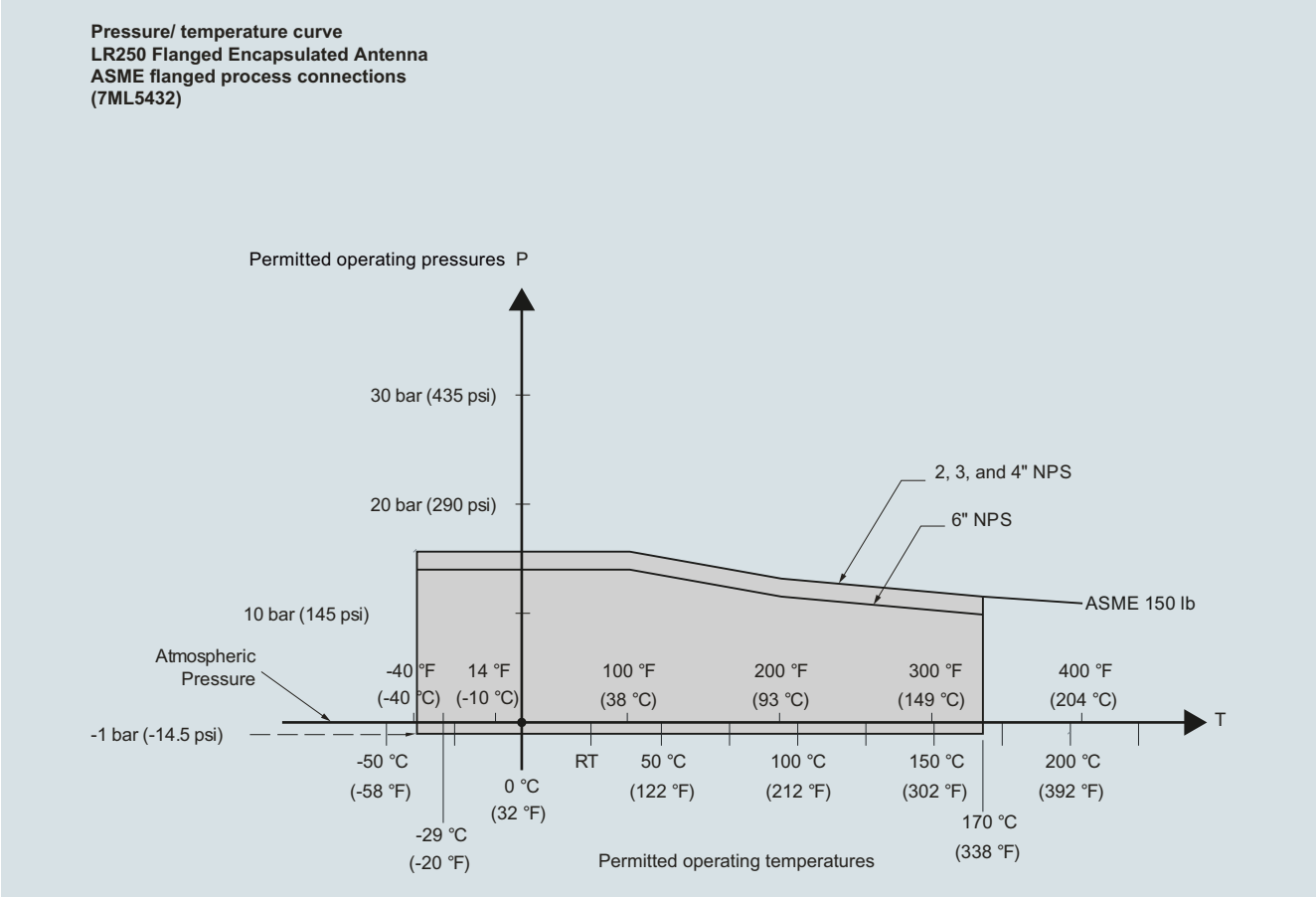

SITRANS LR250 Flanged Encapsulated Antenna pressure/temperature curve

© Siemens 2020

Characteristic curves (continued)

Pressure/ temperature curve
LR250 Flanged Encapsulated Antenna
EN 1092-1 flanged process connections
(7ML5432)

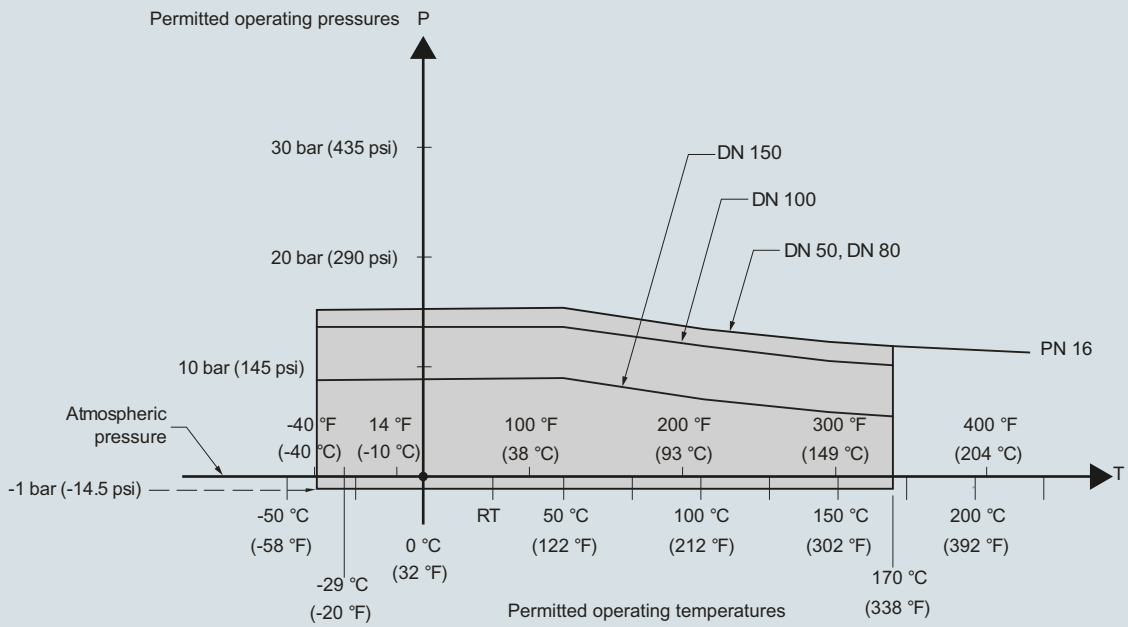

SITRANS LR250 Flanged Encapsulated Antenna pressure/temperature curve

Pressure/ temperature curve
LR250 Flanged Encapsulated Antenna
JIS B 2220 flanged process connections
(7ML5432)

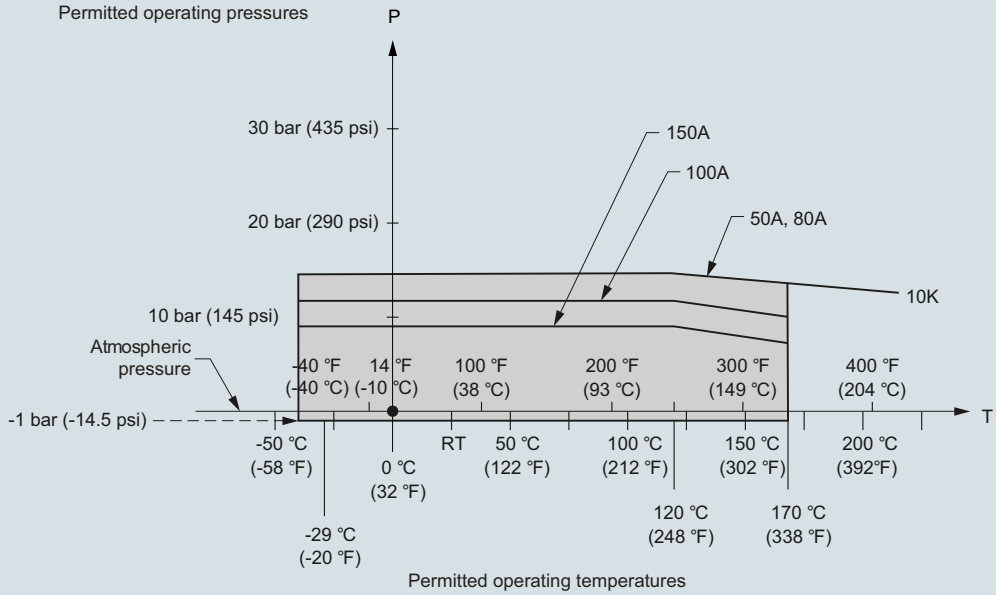

SITRANS LR250 Flanged Encapsulated Antenna pressure/temperature curve

© Siemens 2020

Dimensional drawings

Flanged Encapsulated Antenna 2"/DN 50/50A

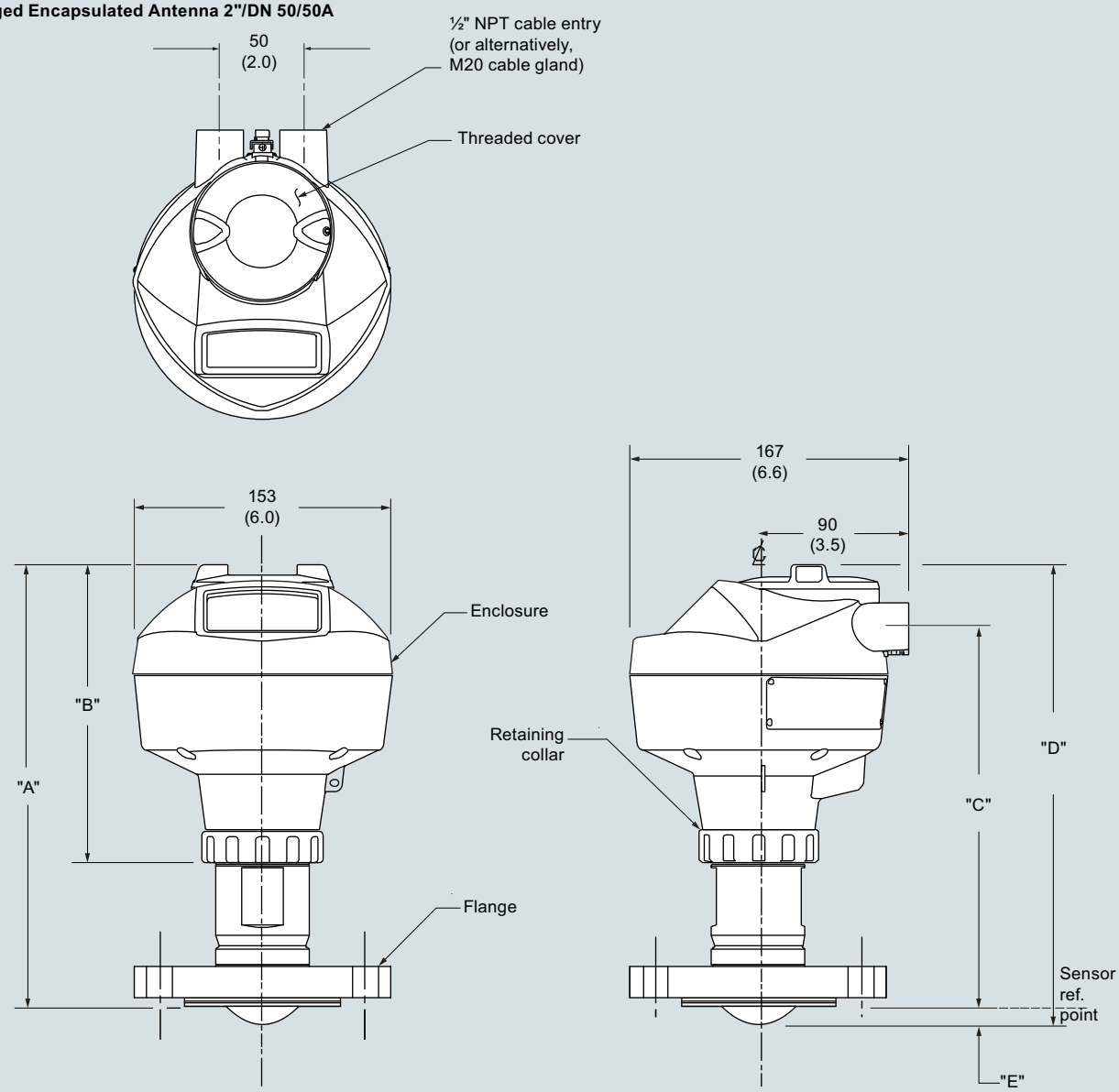

Flange Size	Flange Class	Flange O.D.	Antenna aperture size	Height to Sensor reference point dimension E[1]	Beam angle	Measurement Range	Dimension A	Dimension B	Dimension C	Dimension D
2"	150 lb	152 (5.98)	50 (1.97)	11 (0.43)	12.8°	10 m (32.8 ft)	263 (10.35)	178 (7)	223 (8.78)	274 (10.79)
DN 50	PN 10/16	165 (6.50)								
50A	10K	155 (6.10)								

[1] Height from tip of lens to sensor reference point as shown.

SITRANS LR250 Flanged Encapsulated Antenna, dimensions in mm (inch)

© Siemens 2020

Dimensional drawings (continued)

Flanged Encapsulated Antenna 3"/DN 50/80A or greater

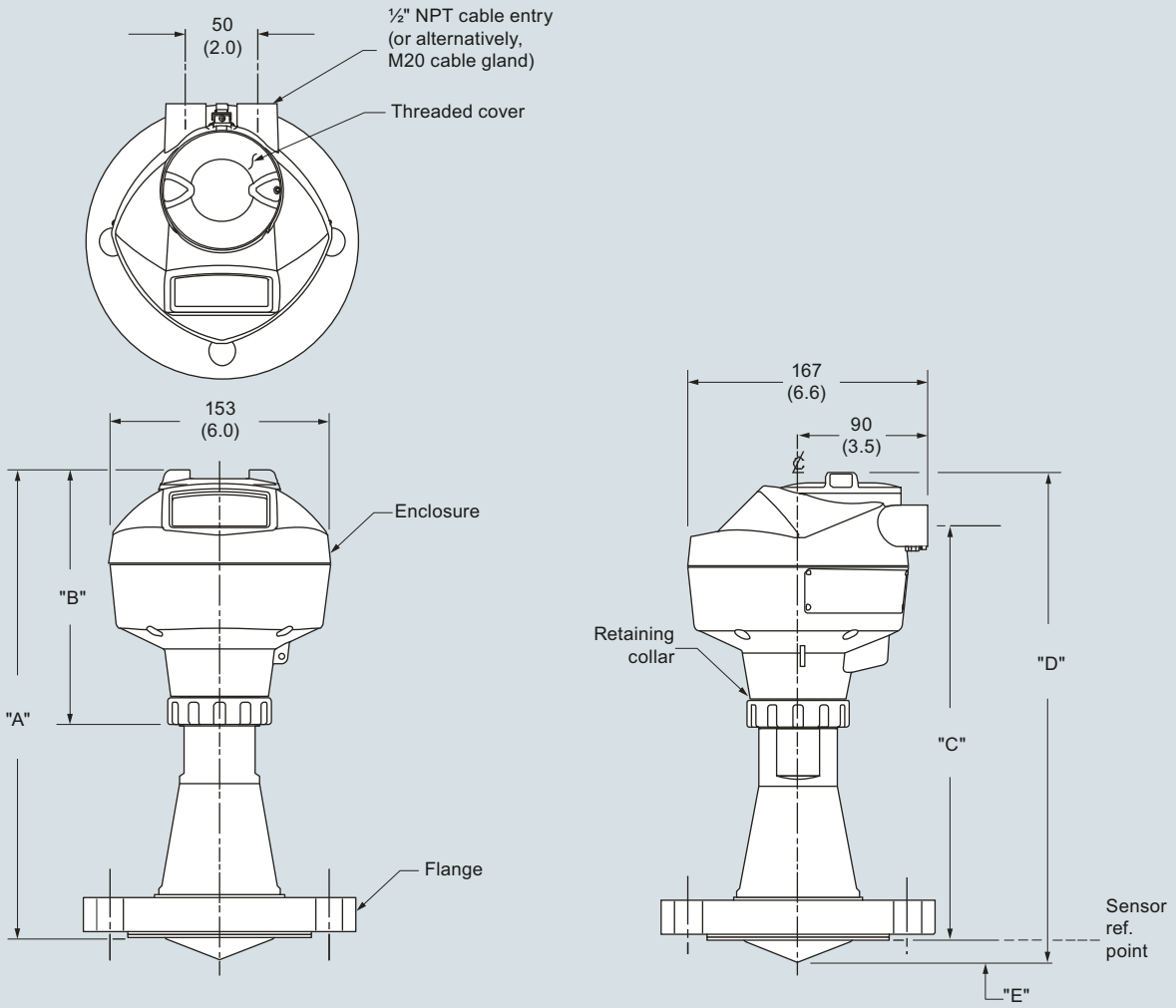

Flange Size	Flange Class	Flange O.D.	Antenna aperture size	Height to Sensor reference point dimension E[1]	Beam angle	Measurement Range	Dimension A	Dimension B	Dimension C	Dimension D
3"	150 lb	190 (7.48)	75 (2.95)	15 (0.59)	9.6°	20 m (65.6 ft)	328 (12.91)	178 (7)	288 (11.34)	343 (13.54)
DN 80	PN 10/16	200 (7.87)								
80A	10K	185 (7.28)								
4"	150 lb	230 (9.06)	75 (2.95)	13 (0.51)	9.6°	20 m (65.6 ft)	328 (12.91)	178 (7)	288 (11.34)	343 (13.50)
DN 100	PN 10/16	220 (8.66)								
100A	10K	210 (8.27)								
6"	150 lb	280 (11.02)	75 (2.95)	15 (0.59)	9.6°	20 m (65.6 ft)	333 (13.11)	178 (7)	293 (11.54)	348 (13.70)
DN 150	PN 10/16	285 (11.25)								
150A	10K	280 (11.02)								

[1] Height from tip of lens to sensor reference point as shown.

SITRANS LR250 Flanged Encapsulated Antenna, dimensions in mm (inch)

© Siemens 2020

Circuit diagrams

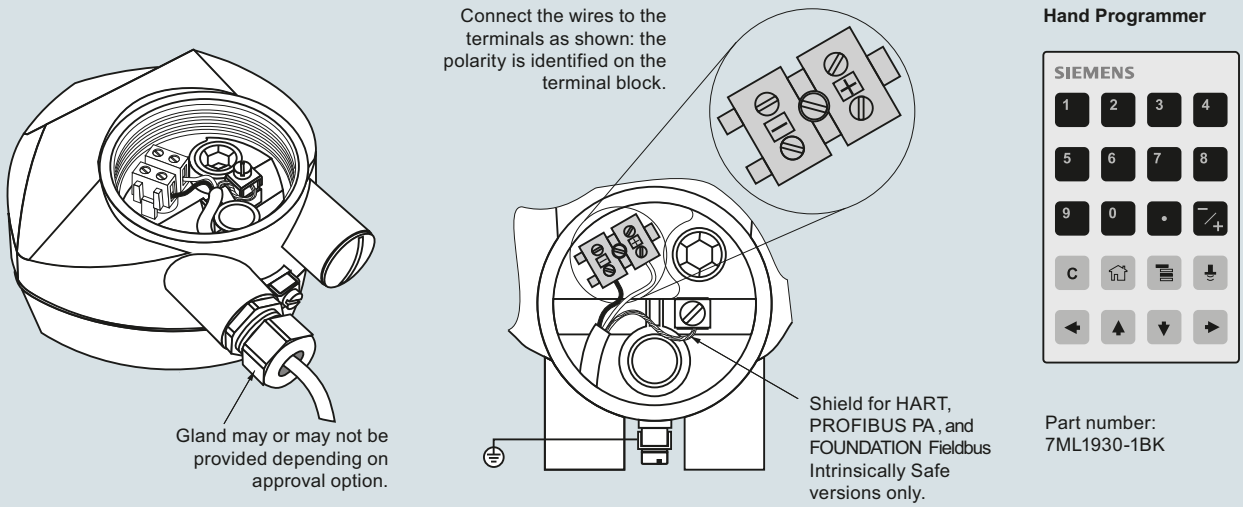

Notes:

1. DC terminal shall be supplied from a source providing electrical isolation between the input and output, to meet the applicable safety requirements of IEC 61010-1.
2. All field wiring must have insulation suitable for rated input voltages.
3. Use shielded twisted pair cable (14 ... 22 AWG) for HART version.
4. Separate cables and conduit may be required to conform to standard instrumentation wiring practices or electrical codes.

SITRANS LR250 connections

© Siemens 2020

Overview

The SITRANS LR250 Hygienic Encapsulated Antenna is a 2-wire 25 GHz pulse radar level transmitter with sanitary and hygienic approvals for continuous monitoring of liquids, slurries, and pastes within the food, beverage, chemical, and pharmaceutical industries to a range of 20 m (66 ft) (antenna dependent).

Picture shown with accessories sold separately.

Benefits

- Fully encapsulated horn antenna design with FDA approved and USP Class VI compliant, TFM 1600 PTFE lens
- < 0.8 µ Ra surface finish for maximum cleanability and hygiene requirements commonly required in sanitary environments
- Chemically resistant TFM 1600 PTFE lens is also suitable for aggressive or corrosive materials
- Approved device in accordance with 3-A, EHEDG EL Class I and/or EHEDG EL Aseptic Class I
- Cost effective replacement for transmitters made of exotic materials
- Graphical local user interface (LUI) makes operation simple with plug-and-play set-up using the intuitive Quick Start Wizard
- Industry standard process connections including ISO 2852, DIN 11851, DIN 11864-1, DIN 11864-2, DIN 11864-3, and Tuchenhagen Varivent Type F and N
- LUI displays echo profiles for diagnostic support
- 25 GHz high frequency and 2 inch (50 mm) process connection/antenna allow for easy mounting
- Insensitive to mounting location and obstructions, and less sensitive to nozzle interference
- Communication using HART, PROFIBUS PA, or FOUNDATION Fieldbus
- Process Intelligence signal processing for improved measurement reliability and Auto False-Echo Suppression of fixed obstructions
- Programming using infrared Intrinsically Safe handheld programmer or over a network using SIMATIC PDM, Emerson AMS, or Field Device Tools, such as PACTware or Fieldcare via SITRANS DTM.
- Functional Safety (SIL 2). Device suitable for use in accordance with IEC 61508 and IEC 61511

Application

SITRANS LR250 includes a graphical local user interface (LUI) that improves set-up and operation by including an intuitive Quick Start Wizard, and echo profile displays for diagnostic support. Startup is easy using the Quick Start wizard with few parameters required for basic operation.

The 25 GHz frequency creates a narrow, focused beam allowing for smaller antenna options and decreasing sensitivity to obstructions.

SITRANS LR250's unique design allows safe and simple programming using the Intrinsically Safe handheld programmer without having to open the instrument's lid.

SITRANS LR250 measures superbly in small vessels and in tanks/vessels up to 20 m (66 ft) on materials with dk > 1.6.

- Key Applications: applications within the food, beverage, chemical and pharmaceutical industries where sanitary, aseptic, or hygienic approvals are required or easy in-stall/clean flush antennas are preferable, such as ice cream, fruit juice, milk, beer, and pharmaceutical or chemical additives and ingredients.

Configuration

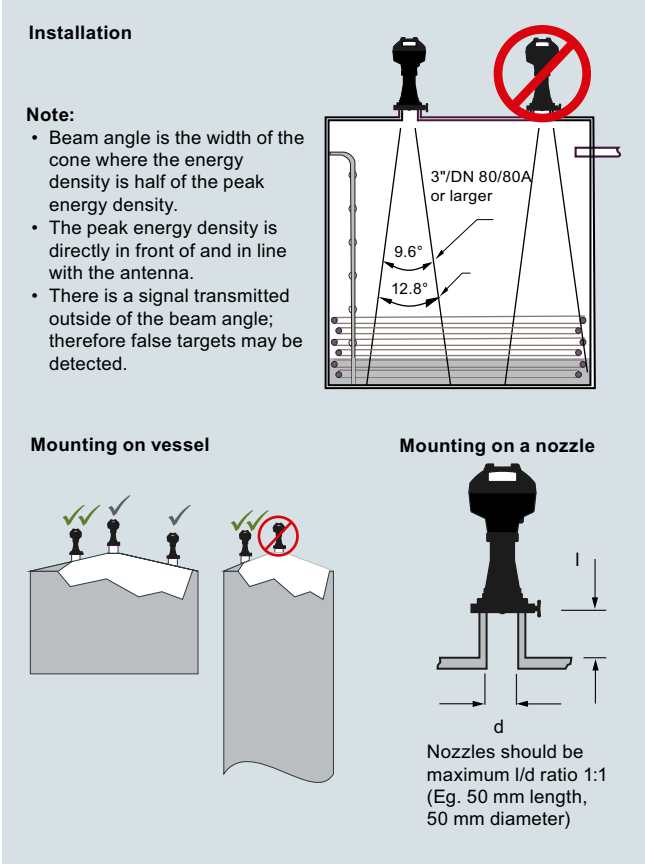

LR250 Hygienic Encapsulated Antenna, dimensions in mm (inch)

© Siemens 2020

Technical specifications

Mode of Operation	
Measuring principle	Radar level measurement
Frequency	K-band (25.0 GHz)
Minimum measuring range	50 mm (2 inch) from end of antenna
Maximum measuring range	20 m (66 ft)
Output	
HART	Version 5.1
• Analog output	4 ... 20 mA
• Accuracy	± 0.02 mA
• Fail-safe	• Programmable as high low or hold (loss of echo) • NE 43 programmable
PROFIBUS PA	Profile 3.01
• Function blocks	2 Analog Input (AI)
FOUNDATION Fieldbus	H1
• Functionality	Basic or LAS
• Version	ITK 5.2.0
• Function blocks	2 Analog Input (AI)
Performance (according to reference conditions IEC60770-1)	
Maximum measured error	• > 500 mm from sensor reference point: 3 mm (0.118 inch) • < 500 mm from sensor reference point: 25 mm (1 inch)
Influence of ambient temperature	< 0.003 %/K
Rated operating conditions	
Installation conditions	
• Location	Indoor/outdoor
Ambient conditions (enclosure)	
• Ambient temperature	-40 ... +80 °C (-40 ... +176 °F)
• Storage temperature	-40 ... +80 °C (-40 ... +176 °F)
• Installation category	I
• Pollution degree	4
Medium conditions	
Dielectric constant ε_r	≥ 1.6 (antenna dependent)
Process temperature	-40 ... +170 °C (-40 ... +338 °F) at process connection
Process pressure	See Pressure/Temperature curves for more information
Design	
Enclosure	
• Material	Aluminum, polyester powder coated
• Cable inlet	2 x M20 x 1.5 or 2 x ½" NPT
Degree of protection	Type 4X/NEMA 4X, Type 6/NEMA 6, IP67, IP68
Weight (dependent on process connection)	• Approx. 4.7 kg (10.4 lb) for 2" ISO 2852 (smallest size) • Approx. 7.9 kg (17.4 lb) for DN 100 DIN 11864-2 (largest size)
Display (local)	Graphic local user interface including quick start wizard and echo profile display
Antenna	
• Material	Stainless steel 316L (1.4435 or 1.4404) and TFM 1600 PTFE Lens (lens is the only wetted part)
• Lens surface finish (R_a)	0.8 µm

Process connections	
Hygienic/Sanitary connections	• 2", 3" & 4" Sanitary Clamp according to ISO 2852 • DN 50, DN 80 & DN 100 Aseptic/Hygienic threaded to DIN 11864-1 [Form A] • DN 50, DN 80 & DN 100 Aseptic/Hygienic flanged to DIN 11864-2 [Form A] • DN 50, DN 80 & DN 100 Aseptic/Hygienic Clamp according to DIN 11864-3 [Form A] • DN 50, DN 80 & DN 100 Hygienic Union according to DIN 11851 • Type F (50 mm) & Type N (68 mm) Tuchenhagen Varivent
Power supply	
4 ... 20 mA/HART	Nominal 24 V DC (max. 30 V DC) with max. 550 Ω
PROFIBUS PA	• 15 mA • Per IEC 61158-2
FOUNDATION Fieldbus	• 20.0 mA • Per IEC 61158-2
Certificates and approvals	
General	$CSA_{US/C}$, CE, FM, RCM
Radio	FCC, Industry Canada, RED, RCM
Hazardous	
• Explosion Proof (Brazil)	INMETRO Ex d ia mb IIC T4 Ga/Gb, Ex ia ta IIIC T100 °C Da
• Increased Safety (Brazil)	INMETRO Ex e ia mb IIC T4 Ga/Gb, Ex ia ta IIIC T100 °C Da
• Intrinsically Safe (Brazil)	INMETRO Ex ia IIC T4 Ga, Ex ia ta IIIC T100 °C Da
• Explosion Proof (Canada/USA)	CSA/FM Class I, Div. 1, Groups A, B, C, D; Class II, Div. 1, Groups E, F, G; Class III T4
• Intrinsically Safe (Canada/USA)	CSA/FM Class I, Div. 1, Groups A, B, C, D; Class II, Div. 1, Groups E, F, G; Class III T4
• Non-incendive (Canada/USA)	CSA/FM Class I, Div. 2, Groups A, B, C, D T5
• Flame Proof/Increased Safety (China)	NEPSI Ex d ia mb IIC T4 Ga/Gb, Ex e ia mb IIC T4 Ga/Gb, Ex iaD tD A20 IP67 T100 °C
• Intrinsically Safe (China)	NEPSI Ex ia IIC T4 Ga, Ex iaD tD A20 IP67 T100 °C
• Non-sparking (China)	NEPSI Ex nA IIC T4 Gc
• Intrinsically Safe (Europe)	ATEX II 1G Ex ia IIC T4 Ga ATEX II 1D Ex ia ta IIIC T100 °C Da
• Non-sparking (Europe)	ATEX II 3G Ex nA IIC T4 Gc
• Flame Proof (International/Europe)	IECEx/ATEX II 1/2 GD, 1D, 2D Ex d mb ia IIC T4 Ga/Gb, Ex ia ta IIC T100 °C Da
• Increased Safety (International/Europe)	IECEx/ATEX II 1/2 GD, 1D, 2D, Ex e mb ia IIC T4 Ga/Gb, Ex ia ta IIIC T100 °C Da
• Intrinsically Safe (International)	IECEx/ATEX II 1 G Ex ia IIC T4 Ga, IECEX/ATEX II 1D Ex ia ta IIIC T100 °C Da
• Explosion Proof (Russia/Kazakhstan)	EAC Ex d
• Increased Safety (Russia/Kazakhstan)	EAC Ex e
• Intrinsically Safe (Russia/Kazakhstan)	EAC Ex ia
Hygienic/Sanitary	EHEDG EL Class I EHEDG EL Aseptic Class I

© Siemens 2020

Technical specifications (continued)

Programming	
Intrinsically Safe Siemens handheld programmer	Infrared receiver
• Approvals for handheld programmer	IS model: ATEX II 1 GD Ex ia IIC T4 Ga Ex ia D 20 T135 °C Ta = -20 ... +50 °C CSA/FM Class I, II, III, Div. 1, Groups A, B, C, D, E, F, G, T6 T_a = 50 °C IECEx SIR 09.0073
Handheld communicator	HART communicator 375/475
PC	• SIMATIC PDM • Emerson AMS • SITRANS DTM (for connection into FDT, such as PACTware or Fieldcare)
Display (local)	Graphic local user interface including quick start wizard and echo profile displays

© Siemens 2020

Selection and ordering data

	Article No.									
SITRANS LR250 Radar level transmitter with encapsulated horn and PTFE lens ↗	**7ML5433-**									
Continuous, non-contact, 20 m (66 ft) range, for liquids, solids, and slurries. For use in hygienic applications.	■	■	■	■	0	-	■	A	■	■
↗ Click on the Article No. for the online configuration in the PIA Life Cycle Portal.										
Hygienic/Sanitary Approvals										
EHEDG EL Class I[1]	1									
EHEDG EL Aseptic Class I[1]	2									
3-A (Tuchenhagen connections only - FC ... FF)[2][3]	3									
EHEDG EL Class I & 3-A (excludes Tuchenhagen connections)[2][4]	4									
Process Connection Types (all types have TFM1600 PTFE lens)										
316L st/st [1.4435 or 1.4404]										
2" Sanitary Clamp according to ISO 2852[5]		A	A							
3" Sanitary Clamp according to ISO 2852		A	B							
4" Sanitary Clamp according to ISO 2852		A	C							
316L st/st (1.4435 or 1.4404) & 304L st/st (1.4301)										
DN 50 Aseptic/Hygienic nozzle/ slotted nut (instrument side) to DIN 11864-1 [Form A][5]		B	A							
DN 80 Aseptic/Hygienic nozzle/ slotted nut (instrument side) to DIN 11864-1 [Form A]		B	B							
DN 100 Aseptic/Hygienic nozzle/ slotted nut (instrument side) to DIN 11864-1 [Form A]		B	C							
316L st/st [1.4435 or 1.4404]										
DN 50 Aseptic/Hygienic flanged to DIN 11864-2 [Form A][5]		C	A							
DN 80 Aseptic/Hygienic flanged to DIN 11864-2 [Form A]		C	B							
DN 100 Aseptic/Hygienic flanged to DIN 11864-2 [Form A]		C	C							
316L st/st [1.4435 or 1.4404]										
DN 50 Aseptic/Hygienic Clamp according to DIN 11864-3 [Form A][5]		D	A							
DN 80 Aseptic/Hygienic Clamp according to DIN 11864-3 [Form A]		D	B							
DN 100 Aseptic/Hygienic Clamp according to DIN 11864-3 [Form A]		D	C							
316L st/st (1.4435 or 1.4404) & 304L st/st (1.4301)										
DN 50 Hygienic nozzle/ slotted nut (instrument side) to DIN 11851[5]		E	A							
DN 80 Hygienic nozzle/ slotted nut (instrument side) to DIN 11851		E	B							
DN 100 Hygienic nozzle/ slotted nut (instrument side) to DIN 11851		E	C							

	Article No.									
SITRANS LR250 Radar level transmitter with encapsulated horn and PTFE lens	**7ML5433-**									
Continuous, non-contact, 20 m (66 ft) range, for liquids, solids, and slurries. For use in hygienic applications.	■	■	■	■	0	-	■	A	■	■
316L st/st [1.4435 or 1.4404]										
Type F (50 mm) Tuchenhagen Varivent (EHEDG only)[5]		F	A							
Type N (68 mm) Tuchenhagen Varivent (EHEDG only)[5]		F	B							
Type F (50 mm) Tuchenhagen Varivent [3-A only & EPDM process seal -40 ... 120 °C (-40 ... 248 °F)][5]		F	C							
Type N (68 mm) Tuchenhagen Varivent [3-A only & EPDM process seal -40 ... 120 °C (-40 ... 248 °F)][5]		F	D							
Type F (50 mm) Tuchenhagen Varivent [3-A only & FKM process seal -20 ... 170 °C (-4 ... 338 °F)][5]		F	E							
Type N (68 mm) Tuchenhagen Varivent [3-A only & FKM process seal -20 ... 170 °C (-4 ... 338 °F)][5]		F	F							
Communication										
PROFIBUS PA				1						
4 ... 20 mA HART, start-up at < 3.6 mA				2						
FOUNDATION Fieldbus				3						
Enclosure (with Cable Inlets)										
Aluminum, Epoxy paint, 2 X ½" NPT						0				
Aluminum, Epoxy paint, 2 X M20 x 1.5						1				
Approvals										
General Purpose, CE, CSA, FM, FCC, RED, RCM								A		
Intrinsically Safe: CSA/FM Class I, Div. 1, Groups A, B, C, D, Class II, Div. 1, Groups E, F, G, Class III T4 FCC, Industry Canada								B		
Intrinsically Safe: IECEx/ATEX II 1 GD Ex ia IIC T4 Ga, Ex ia ta IIIC T100 °C Da, INMETRO Ex ia IIC T4 Ga, Ex ia ta IIIC T100 °C Da, CE, RED, RCM								C		
Non-incendive: CSA/FM Class I, Div. 2, Groups A, B, C, D T5, FCC, Industry Canada								D		
Non Sparking: ATEX II 3G Ex nA IIC T4 Gc, CE, RED, RCM								E		
Increased Safety: IECEx/ATEX II 1/2 GD, 1D, 2D Ex e mb ia IIC T4 Ga/Gb, Ex ia ta IIIC T100 °C Da, INMETRO Ex e ia mb IIC T4 Ga/Gb, Ex ia ta IIIC T100 °C Da, CE, RED, RCM[6]								F		
Flameproof: IECEx/ATEX II 1/2 GD 1D, 2D Ex d mb ia IIC T4 Ga/Gb, Ex ia ta IIIC T100 °C Da, INMETRO Ex d ia mb IIC T4 Ga/Gb, Ex ia ta IIIC T100 °C Da, CE, RED, RCM[6]								G		
Explosion proof: CSA/FM Class I, II and III, Div. 1, Groups A, B, C, D, E, F, G, FCC, Industry Canada[6]								H		
Non Sparking: NEPSI Ex nA IIC T4 Gc								K		
Intrinsically Safe: NEPSI Ex ia IIC T4 Ga, Ex iaD tD A20 IP67 T100 °C								L		
Flameproof: NEPSI Ex d ia mb IIC T4 Ga/Gb, Ex iaD tD A20 IP67 T100 °C[6]								M		
Increased Safety: NEPSI Ex e ia mb IIC T4 Ga/Gb, Ex iaD tD A20 IP67 T100 °C[6]								N		
Pressure Rating										
Rating per pressure/temperature curves in instruction manual										0

© Siemens 2020

Selection and ordering data

	Order code
Further designs	
Please add "**-Z**" to Article No. and specify Order code(s).	
Electrical Connection cable entry:	
Plug M12 (IP 67 rating) with mating connector[2)7)8)]	**A50**
Plug 7/8" (IP 67 rating) with mating Connector[2)8)9)]	**A55**
Test Certificates	
Manufacturer's Test Certificate M to DIN 55350, Part 18 and to ISO 9000	**C11**
Material inspection Certificate 3.1 of EN 10204	**C12**
Functional Safety	
Functional Safety (SIL 2). Device suitable for use in accordance with IEC 61508 and IEC 61511[6)10)]	**C20**
Namur	
Namur NE43 compliant, device preset to failsafe < 3.6 mA[6)]	**N07**
Tagging	
Stainless steel tag [69 mm x 50 mm (2.71 x 1.97 inch)]	
Measuring-point number / identification (max. 27 characters) specify in plain text	**Y15**
Operating Instructions	
All literature is available to download for free, in a range of languages, at	

http://www.siemens.com/processinstrumentation/documentation

	Article No
Accessories	
Handheld programmer, Intrinsically safe, EEx ia (LUI enabled)	**7ML1930-1BK**
HART modem/USB (for use with a PC and SIMATIC PDM)	**7MF4997-1DB**
One metallic cable gland M20 x 1.5, rated -40 ... +80 °C (-40 ... +176 °F), HART (two are required)[6)]	**7ML1930-1AP**
One metallic cable gland M20 x 1.5, rated -40 ... +80 °C (-40 ... +176 °F), PROFIBUS PA and FOUNDATION Fieldbus (two are required)[8)]	**7ML1930-1AQ**
SITRANS RD100, loop powered display - see Chapter 7	**7ML5741-.....-.**
SITRANS RD150, remote digital display for 4 ... 20 mA and HART devices - see Chapter 7	**7ML5742-.....-....**
SITRANS RD200, universal input display with Modbus conversion - see Chapter 7	**7ML5740-.....-..**
SITRANS RD300, dual line display with totalizer and linearization curve and Modbus conversion - see Chapter 7	**7ML5744-.....-..**
For applicable back up point level switch - see point level measurement section	

1) Available with Process connection options AA ... FB & FF only.
2) Available with Approval options A, B, C, L only.
3) Available with Process connections FC ... FF only.
4) Available with Process connection options AA ... EC & FF only.
5) Max. range 10 m (32.8 ft), dk > 3 [20 m (66 ft) and dk > 1.6 if installed in a stillpipe].
6) Applicable with Communication option 2 only.
7) Available with Enclosure option 1 only.
8) Available with Communication options 1 and 3 only.
9) Available with Enclosure option 0 only.
10) Available with Approval options A, B, C, D, E, K, L only.

© Siemens 2020

Selection and ordering data

SITRANS LR250 hygienic encapsulated Specials

For "Electronics Head only" follow the standard configuration and choose YY option on positions 9 and 10 of the full part number.

For example: 7ML5433-1YY20-1AA0 will order an electronics head for the following:

EHEDG EL Class 1 approval, 4 ... 20 mA HART, M20 cable entries, General purpose Haz Loc approval, pressure rating as per manual.

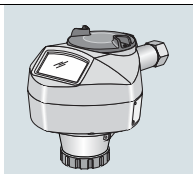

Spare Lens Kits (Lens and O-ring)

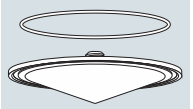

	Article No.
Kit, 2 inch, ISO 2852, HEA, Lens, silicone secondary O-ring	**A5E32572731**
Kit, 3 inch, ISO 2852, HEA, Lens, silicone secondary O-ring	**A5E32572745**
Kit, 4 inch, ISO 2852, HEA, Lens, silicone secondary O-ring	**A5E32572747**
Kit, DN 50, DIN 11851, HEA, Lens, silicone secondary O-ring	**A5E32572758**
Kit, DN 80, DIN 11851, HEA, Lens, silicone secondary O-ring	**A5E32572770**
Kit, DN 100, DIN 11851, HEA, Lens, silicone secondary O-ring	**A5E32572772**
Kit, DN 50, DIN 11864-1, HEA, Lens, silicone secondary O-ring	**A5E32572773**
Kit, DN 80, DIN 11864-1, HEA, Lens, silicone secondary O-ring	**A5E32572779**
Kit, DN 100, DIN 11864-1, HEA, Lens, silicone secondary O-ring	**A5E32572782**
Kit, DN 50, DIN 11864-2/3, HEA, Lens, silicone secondary O-ring	**A5E32572785**
Kit, DN 80, DIN11864-2/3, HEA, Lens, silicone secondary O-ring	**A5E32572790**
Kit, DN 100, DIN11864-2/3, HEA, Lens, silicone secondary O-ring	**A5E32572791**
Kit, Tuchenhagen, Type F, HEA, Lens, silicone secondary O-ring	**A5E32572794**
Kit, Tuchenhagen, Type N, HEA, Lens, silicone secondary O-ring	**A5E32572795**

Accessories (customer side process connection and FKM and EPDM seal for each size and type)

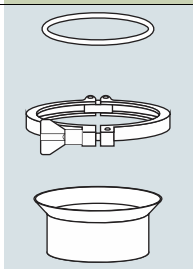

	Article No.
Kit DN50 DIN11864-1 GS Form A tank connection, EPDM Seal Class II	**A5E32910638**
Kit, DN80 DIN11864-1 GS Form A tank connection, EPDM Seal Class II	**A5E32910649**
Kit, DN100 DIN11864-1 GS Form A tank connection, EPDM Seal Class II	**A5E32910657**
Kit DN50 DIN11864-1 GS Form A tank connection, FKM Seal Class I	**A5E32910658**
Kit, DN80 DIN11864-1 GS Form A tank connection, FKM Seal Class I	**A5E32910671**
Kit, DN100 DIN11864-1 GS Form A tank connection, FKM Seal Class I	**A5E32910681**
Kit 2" ISO2852 tank connection, Clamp, Cleanable EPDM Seal Class II	**A5E32910686**
Kit 3" ISO2852 tank connection, Clamp, Cleanable EPDM Seal Class II	**A5E32910697**
Kit 4" ISO2852 tank connection, Clamp, Cleanable EPDM Seal Class II	**A5E32910708**
Kit 2" ISO2852 tank connection, Clamp, Cleanable FKM Seal	**A5E32910718**
Kit 3" ISO2852 tank connection, Clamp, Cleanable FKM Seal	**A5E32910723**
Kit 4" ISO2852 tank connection, Clamp, Cleanable FKM Seal	**A5E32910734**
Kit DN50 DIN11851 SC Tank connection, EPDM Seal Class II[11)]	**A5E32910746**
Kit DN80 DIN11851 SC Tank connection, EPDM Seal Class II[11)]	**A5E32910771**
Kit DN100 DIN11851 SC Tank connection, EPDM Seal Class II[11)]	**A5E32910780**
Kit DN50 DIN11851 SC Tank connection, FKM Seal Class II	**A5E32910784**
Kit DN80 DIN11851 SC Tank connection, FKM Seal Class II	**A5E32910789**
Kit DN100 DIN11851 SC Tank connection, FKM Seal Class II	**A5E32910790**
Kit DN50 DIN11864-2 Form A tank connection, M8 Hardware (nut/bolt/washer), EPDM Seal Class II	**A5E32910791**
Kit DN80 DIN11864-2 Form A tank connection, M10 Hardware (nut/bolt/washer), EPDM Seal Class II	**A5E32910793**
Kit DN100 DIN11864-2 Form A tank connection, M10 Hardware (nut/bolt/washer), EPDM Seal Class II	**A5E32910799**
Kit DN50 DIN11864-2 Form A tank connection, M8 Hardware (nut/bolt/washer), FKM Seal Class I	**A5E32910805**
Kit DN80 DIN11864-2 Form A tank connection, M10 Hardware (nut/bolt/washer), FKM Seal Class I	**A5E32910809**
Kit DN100 DIN11864-2 Form A tank connection, M10 Hardware (nut/bolt/washer), FKM Seal Class I	**A5E32910812**
Kit DN50 DIN11864-3 Form A tank connection, Clamp, EPDM Seal Class II	**A5E32910813**
Kit DN80 DIN11864-3 Form A tank connection, Clamp, EPDM Seal Class II	**A5E32910814**
Kit DN100 DIN11864-3 Form A tank connection, Clamp, EPDM Seal Class II	**A5E32910815**
Kit DN50 DIN11864-3 Form A tank connection, Clamp, FKM Seal Class I	**A5E32910816**
Kit DN80 DIN11864-3 Form A tank connection, Clamp, FKM Seal Class I	**A5E32910817**
Kit DN100 DIN11864-3 Form A tank connection, Clamp, FKM Seal Class I	**A5E32910818**
Kit Type F, Tuchenhagen, Clamp, EPDM Seal Class II (EHEDG only) - no tank connection	**A5E33489537**
Kit Type N, Tuchenhagen, Clamp, EPDM Seal Class II (EHEDG only) - no tank connection	**A5E33489543**
Kit Type F, Tuchenhagen, Clamp, FKM Seal Class I (EHEDG only) - no tank connection	**A5E33489828**
Kit Type N, Tuchenhagen, Clamp, FKM Seal Class I (EHEDG only) - no tank connection	**A5E33489830**

Ex-proof plugs

Ex-proof plugs kit, 1/2" NPT, qty 5	**A5E39979991**
Ex-proof plugs kit, M20, qty 5	**A5E39979992**

[11)] Class II for low fat applications when EPDM seal used on DIN11851

© Siemens 2020

Characteristic curves

DIN 11851 Sanitary/Hygienic nozzle/slotted nut: DN 50, DN 80, and DN 100
DIN 11864-1 Aseptic/Hygienic nozzle/slotted nut: DN 50, DN 80, and DN 100

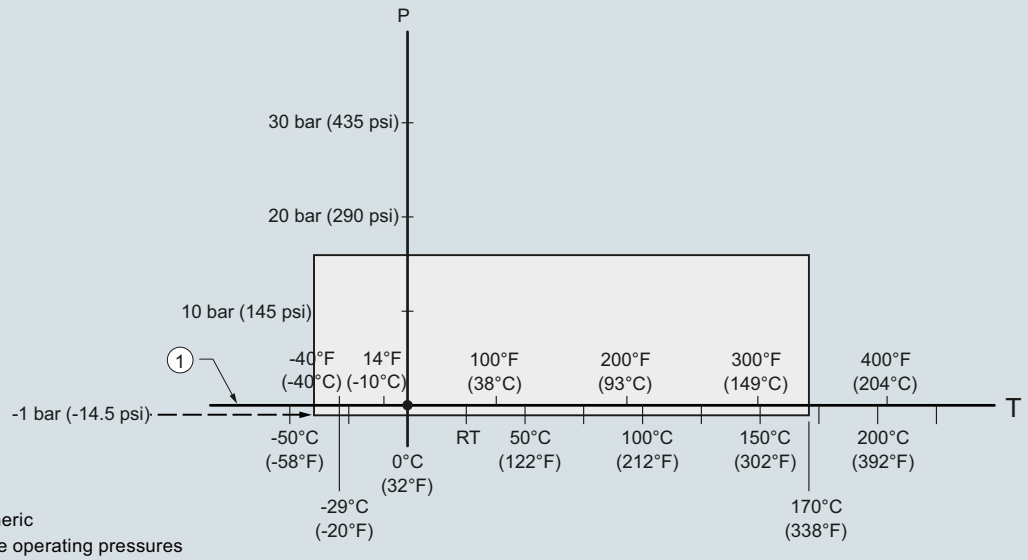

1 Atmospheric
P Allowable operating pressures
T Allowable operating temperatures

SITRANS LR250 Hygienic Encapsulated Antenna, process pressure/temperature rating curve

DIN 11864-2 Aseptic/Hygienic flanged: DN 50, DN 80, and DN 100

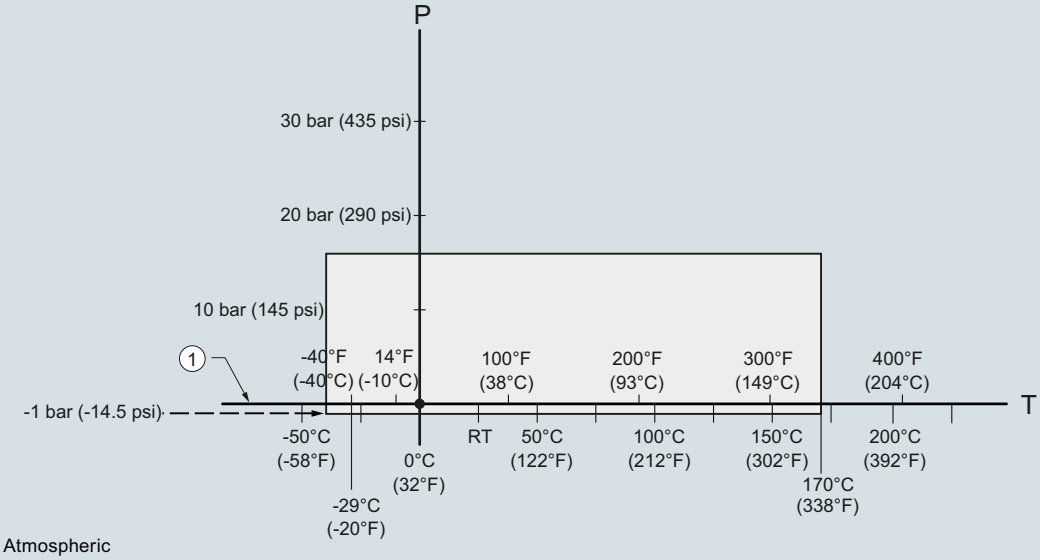

1 Atmospheric
P Allowable operating pressures
T Allowable operating temperatures

Note: For pressure applications, all attachment hardware must be suitably rated.

SITRANS LR250 Hygienic Encapsulated Antenna, process pressure/temperature rating curve

© Siemens 2020

Characteristic curves (continued)

DIN 11864-3 Aseptic/Hygienic clamp: DN 50, DN 80, and DN 100
IS0 2852 Sanitary/Hygienic clamp: 2", 3", and 4"
Tuchenhagen Varivent face seal clamp: Type N (68 mm) and Type F (50 mm)

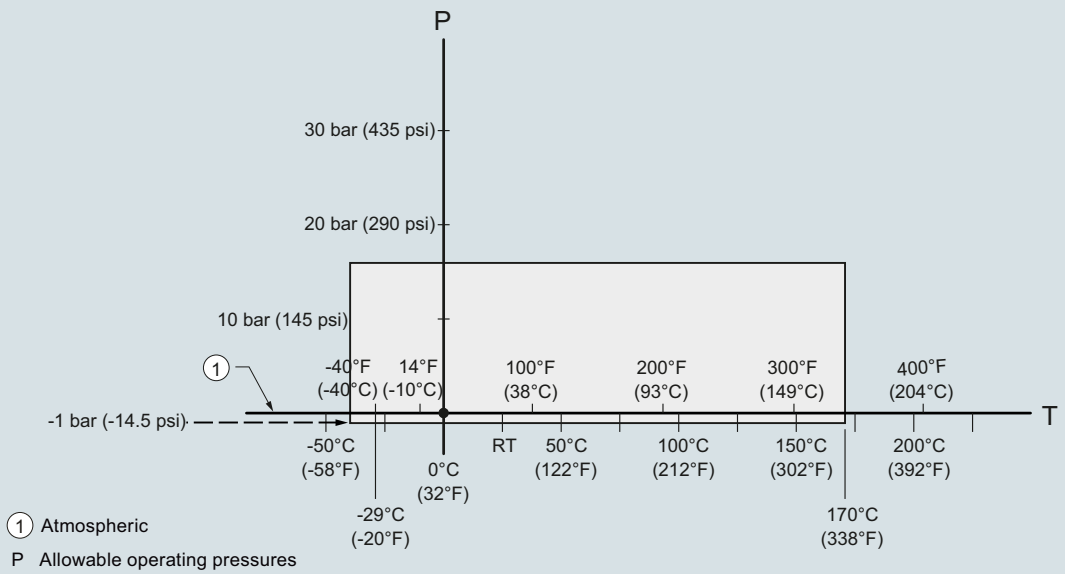

1 Atmospheric
P Allowable operating pressures
T Allowable operating temperatures

Note: For pressure applications, all clamps must be rated accordingly.

SITRANS LR250 Hygienic Encapsulated Antenna, process pressure/temperature rating curve

© Siemens 2020

Dimensional drawings

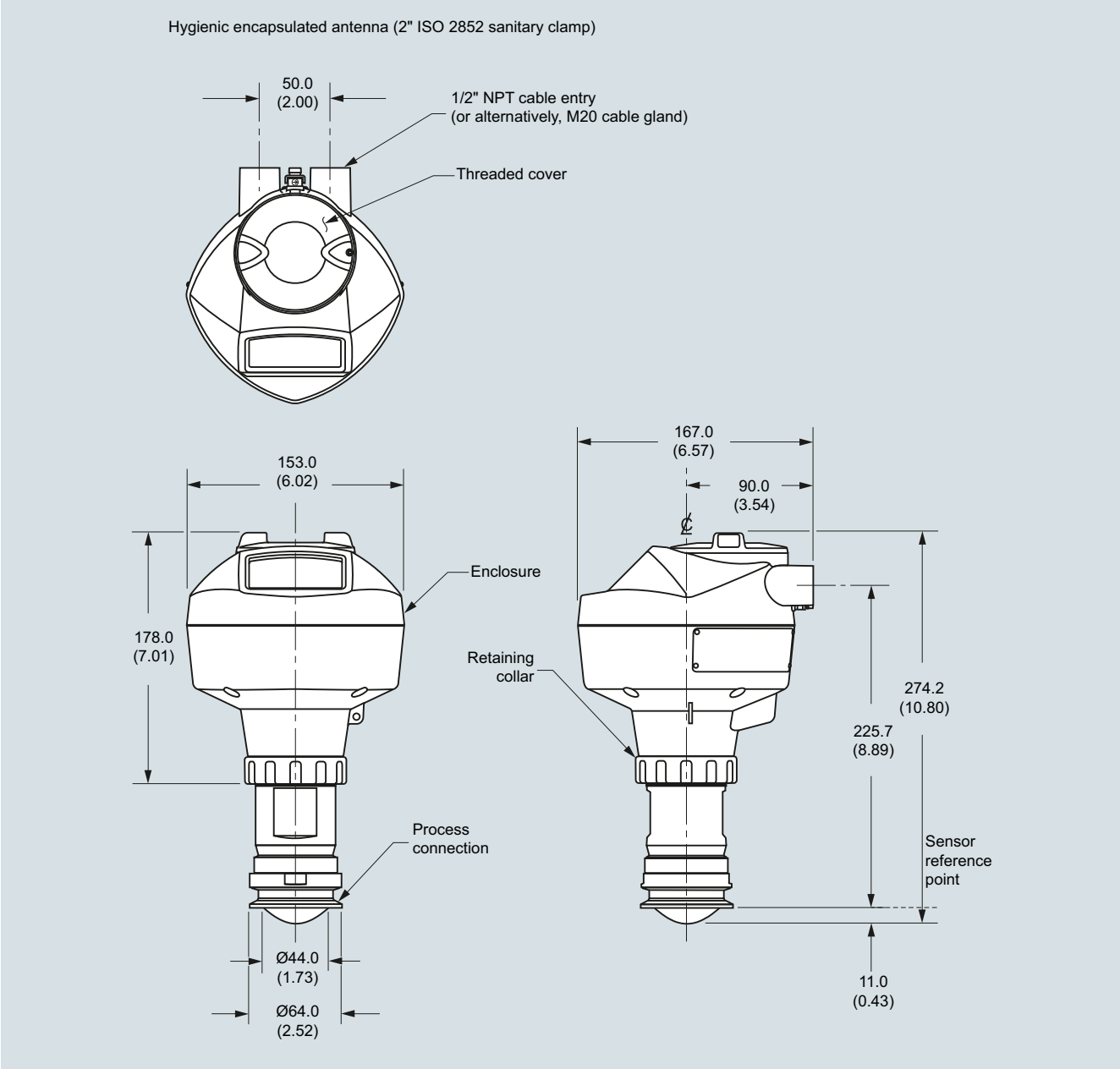

SITRANS LR250 Hygienic Encapsulated Antenna (2" ISO 2852 sanitary clamp), dimensions in mm (inch)

© Siemens 2020

Dimensional drawings (continued)

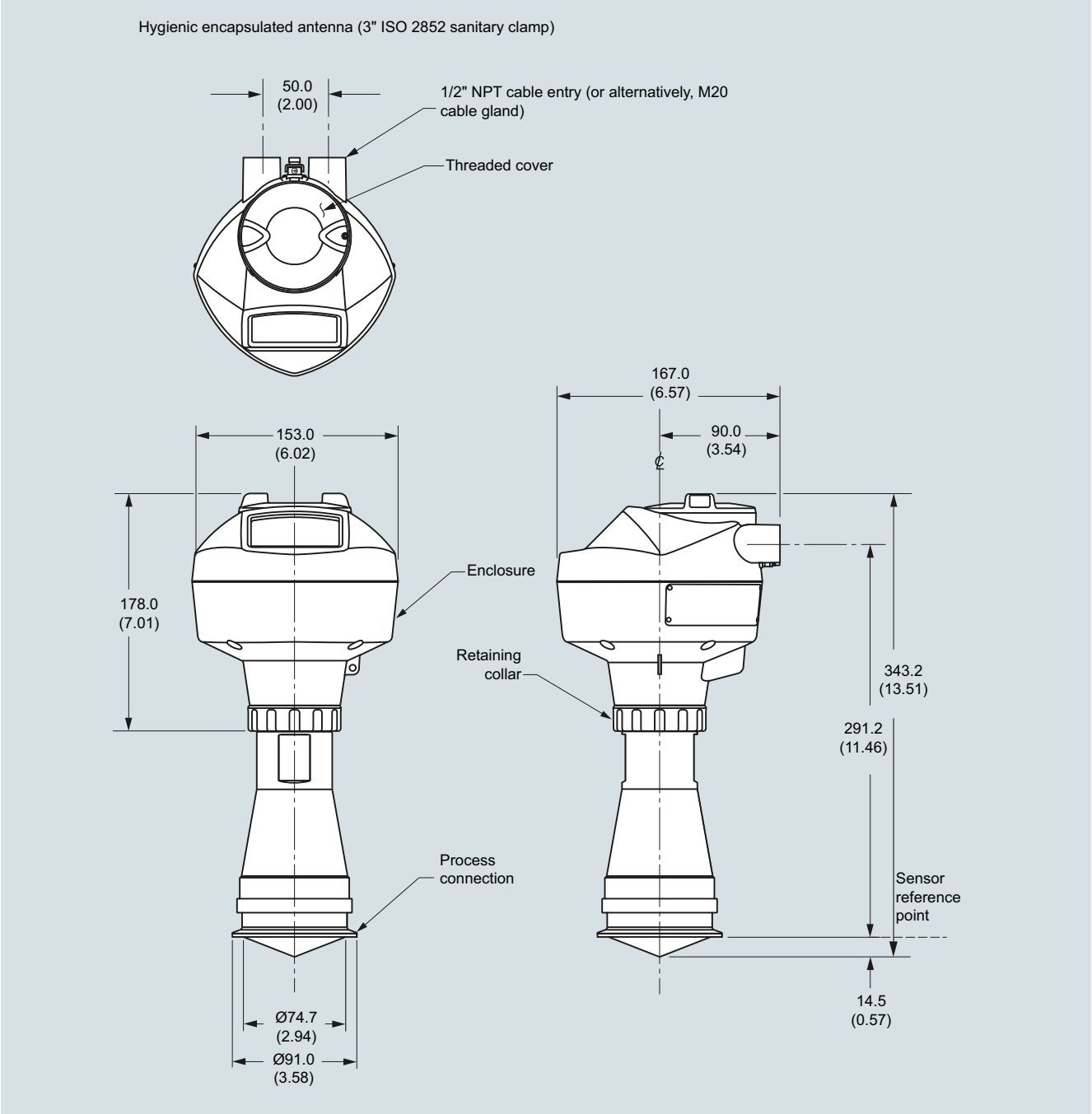

SITRANS LR250 Hygienic Encapsulated Antenna (3" ISO 2852 sanitary clamp), dimensions in mm (inch)

© Siemens 2020

Dimensional drawings (continued)

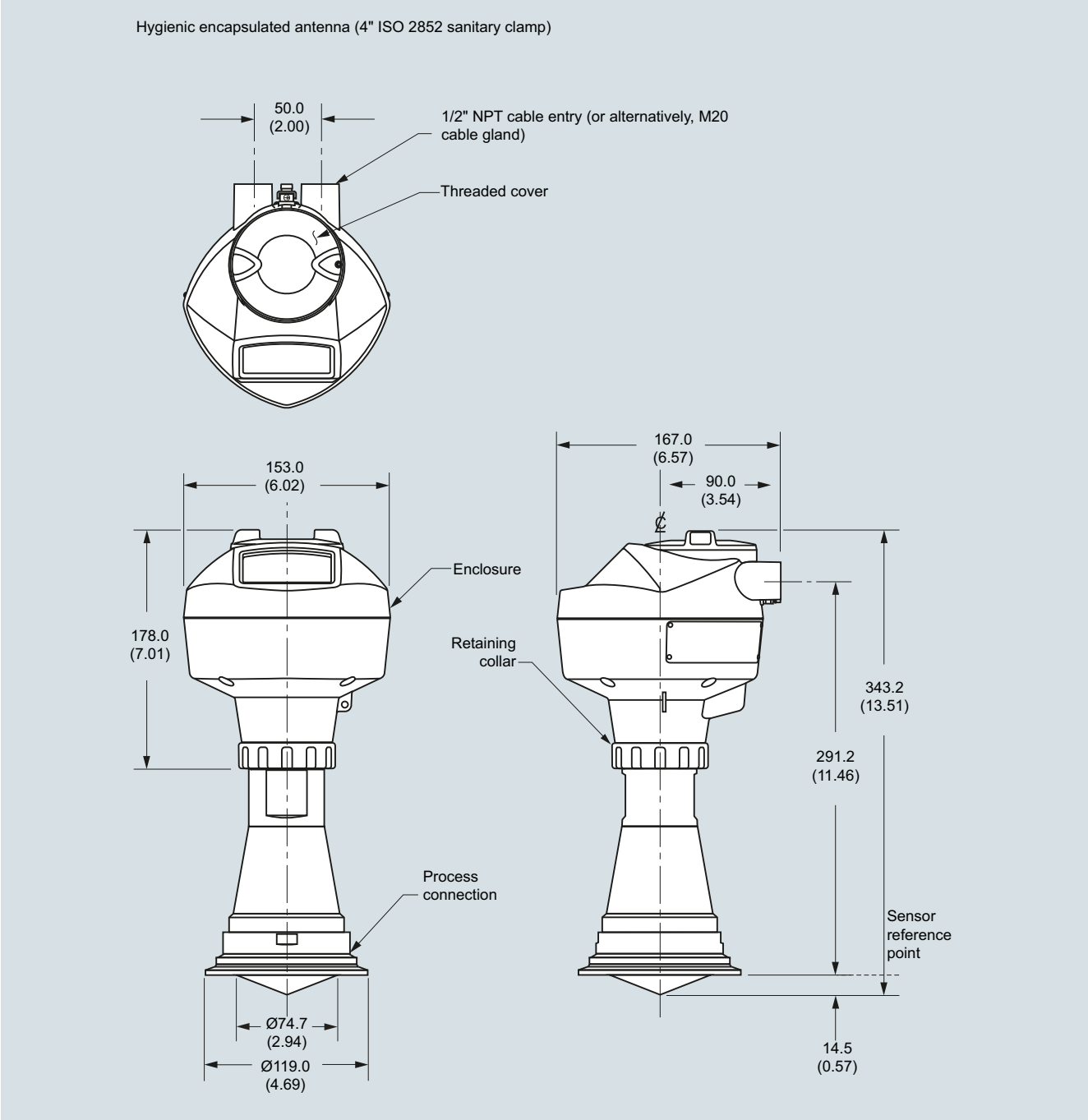

SITRANS LR250 Hygienic Encapsulated Antenna (4" ISO 2852 sanitary clamp), dimensions in mm (inch)

© Siemens 2020

Dimensional drawings (continued)

Hygienic encapsulated antenna (DN 50 nozzle/slotted nut to DIN 11851)

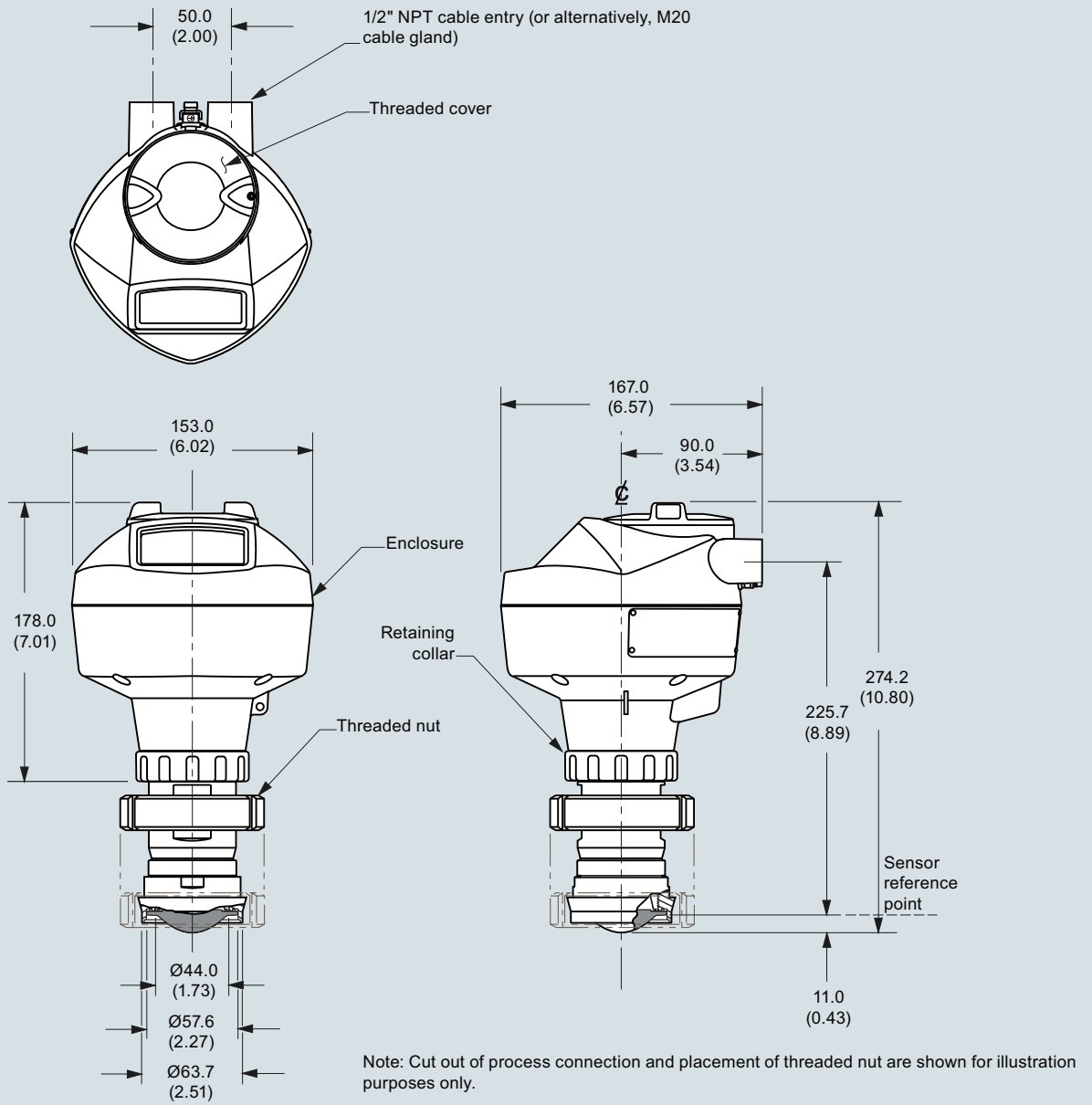

Note: Cut out of process connection and placement of threaded nut are shown for illustration purposes only.

SITRANS LR250 Hygienic Encapsulated Antenna (DN 50 nozzle/slotted nut to DIN 11851), dimensions in mm (inch)

© Siemens 2020

Dimensional drawings (continued)

Hygienic encapsulated antenna (DN 80 nozzle/slotted nut to DIN 11851)

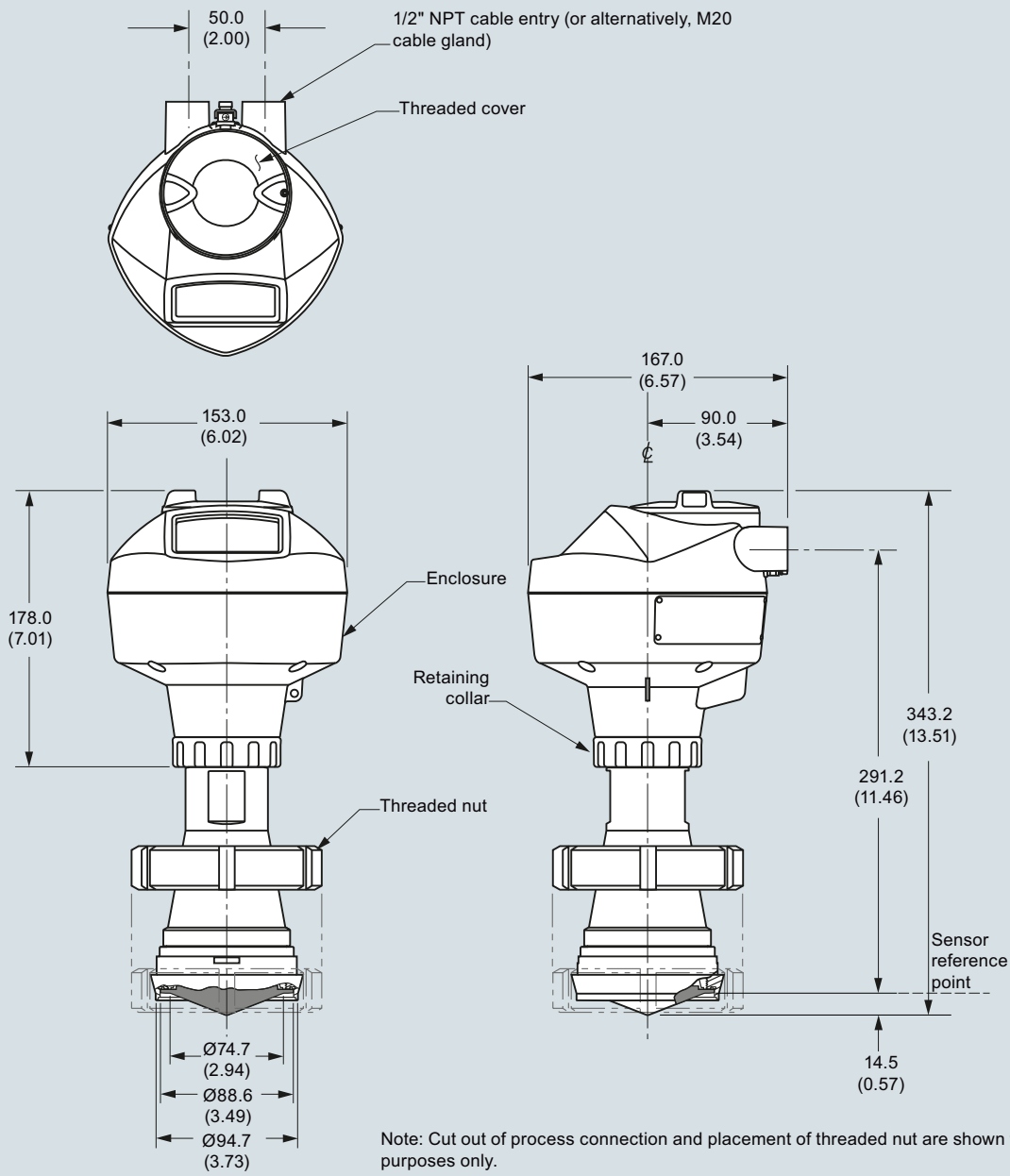

Note: Cut out of process connection and placement of threaded nut are shown for illustration purposes only.

SITRANS LR250 Hygienic Encapsulated Antenna (DN 80 nozzle/slotted nut to DIN 11851), dimensions in mm (inch)

© Siemens 2020

Dimensional drawings (continued)

Hygienic encapsulated antenna (DN 100 nozzle/slotted nut to DIN 11851)

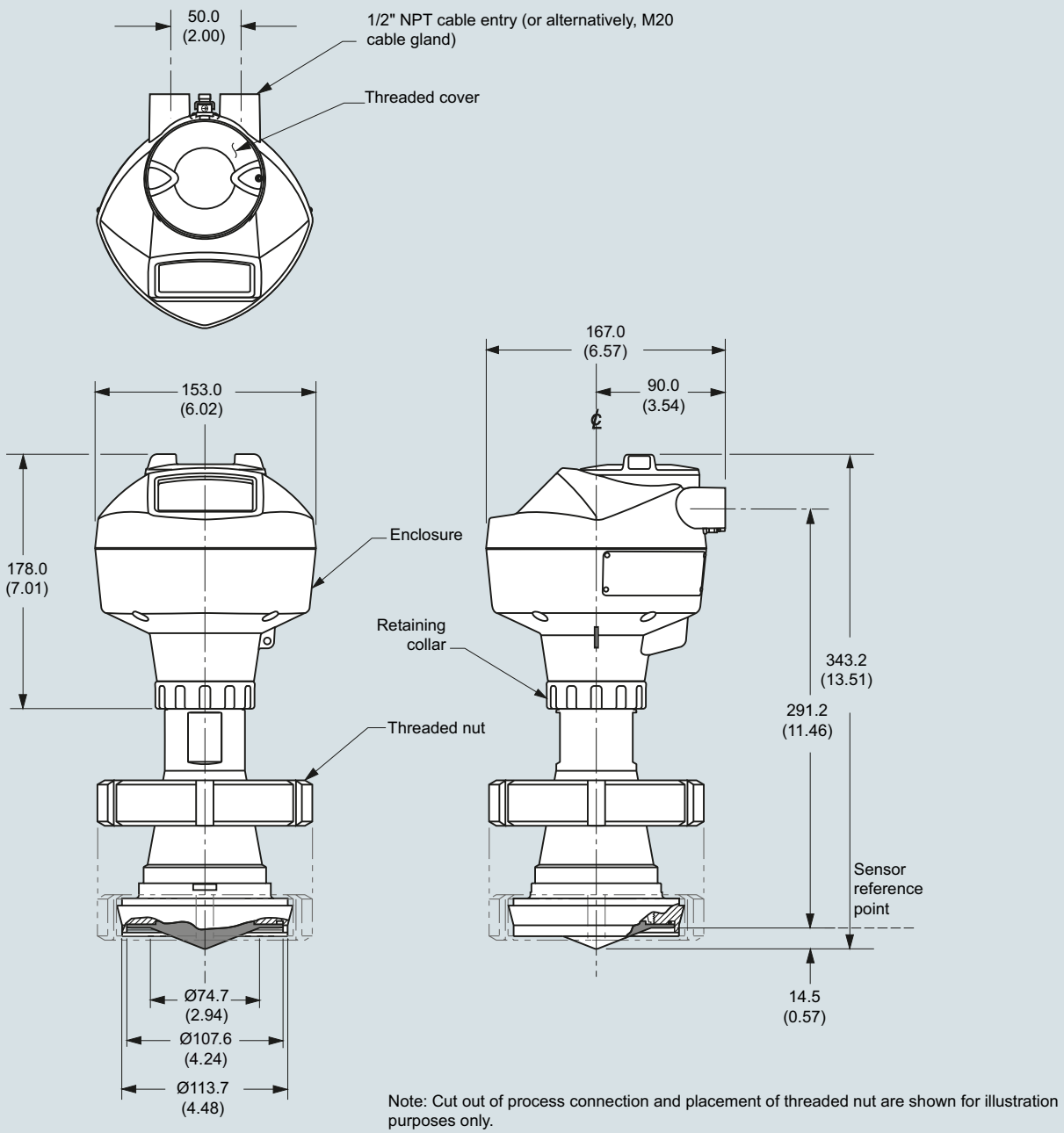

Note: Cut out of process connection and placement of threaded nut are shown for illustration purposes only.

SITRANS LR250 Hygienic Encapsulated Antenna (DN 100 nozzle/slotted nut to DIN 11851), dimensions in mm (inch)

© Siemens 2020

Dimensional drawings (continued)

Hygienic encapsulated antenna (DN 50 aseptic clamp to DIN 11864-1)

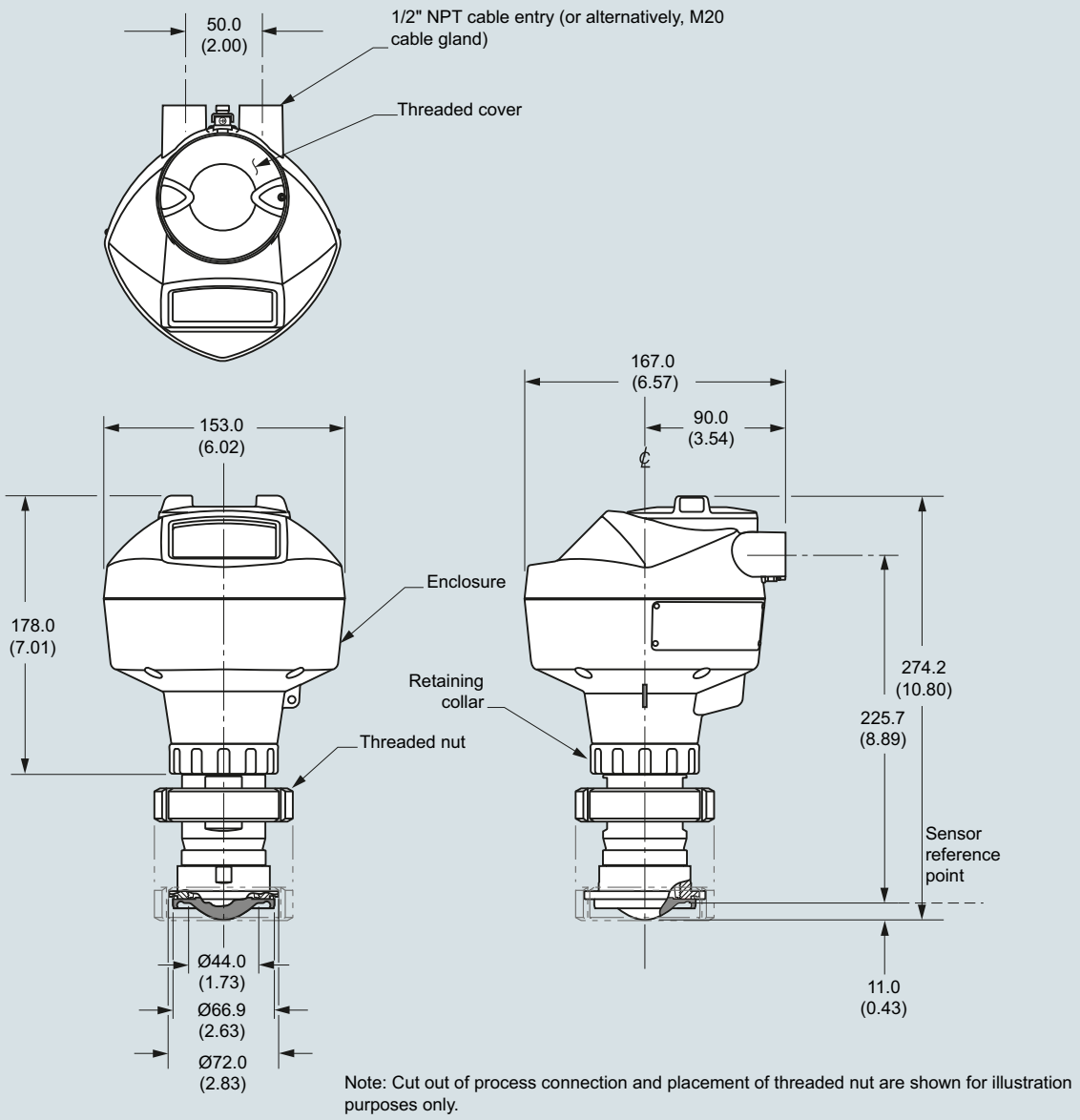

Note: Cut out of process connection and placement of threaded nut are shown for illustration purposes only.

SITRANS LR250 Hygienic Encapsulated Antenna (DN 50 aseptic clamp to DIN 11864-1), dimensions in mm (inch)

© Siemens 2020

Dimensional drawings (continued)

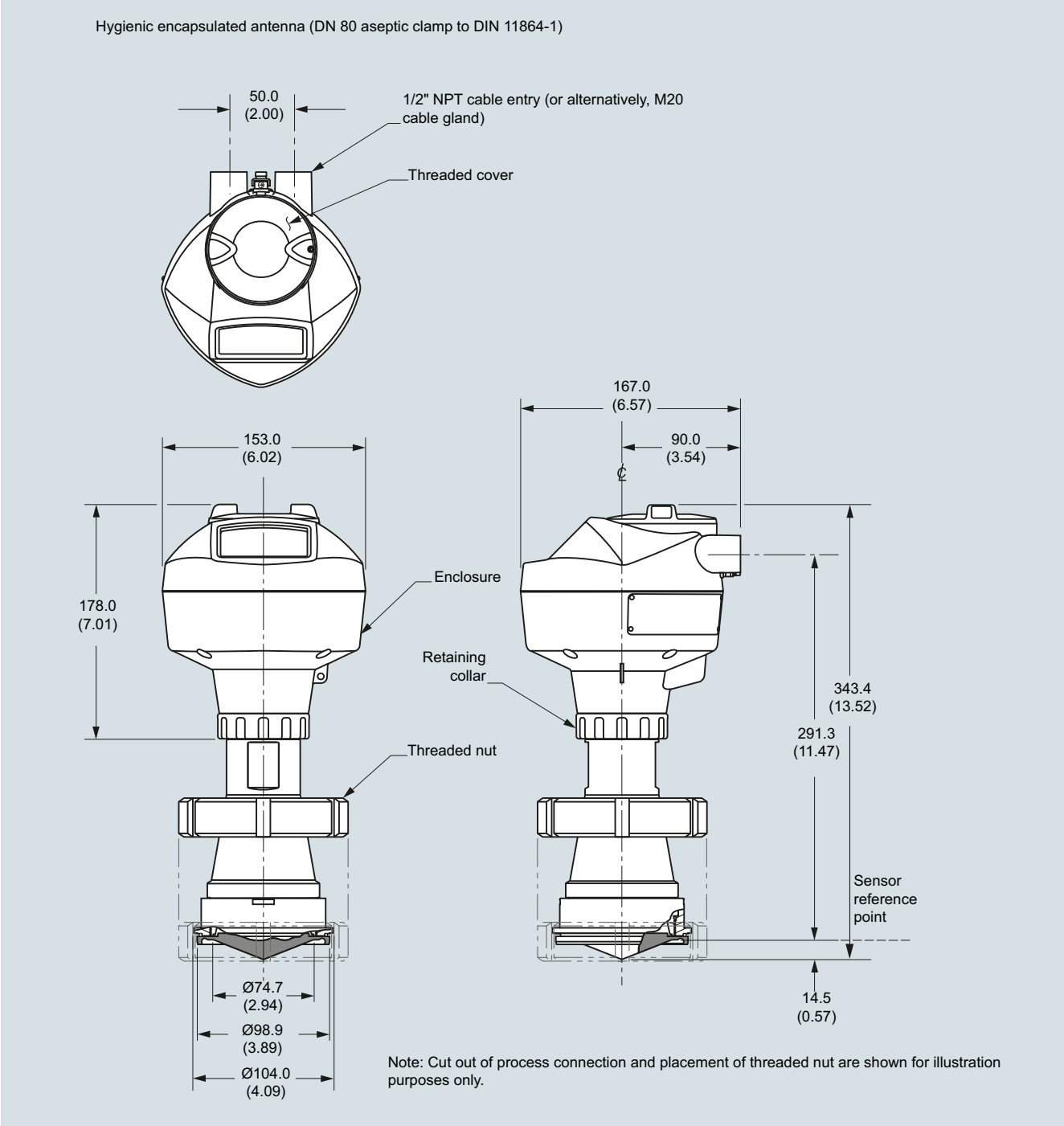

SITRANS LR250 Hygienic Encapsulated Antenna (DN 80 aseptic clamp to DIN 11864-1), dimensions in mm (inch)

© Siemens 2020

Dimensional drawings (continued)

Hygienic encapsulated antenna (DN 100 aseptic clamp to DIN 11864-1)

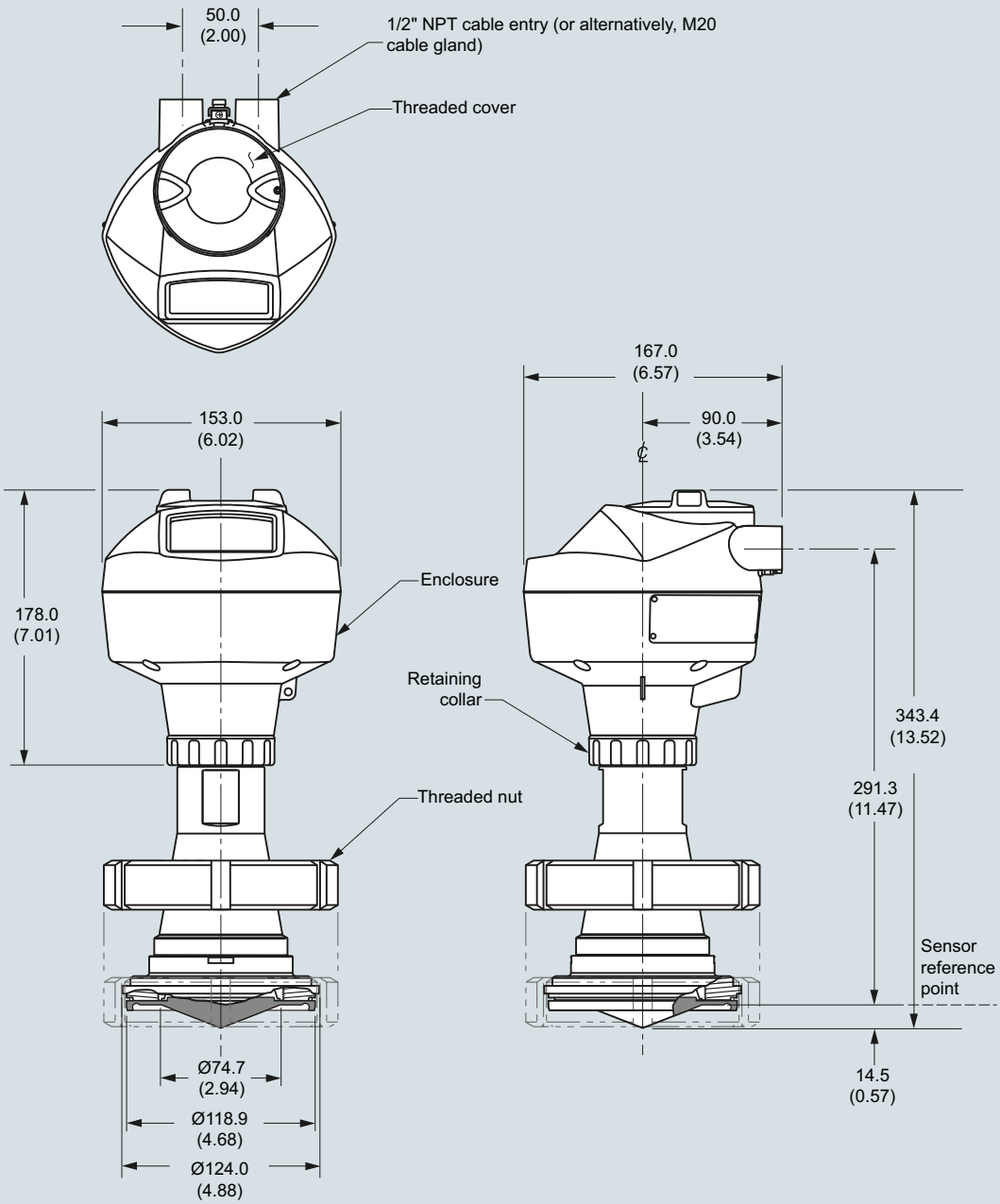

Note: Cut out of process connection and placement of threaded nut are shown for illustration purposes only.

SITRANS LR250 Hygienic Encapsulated Antenna (DN 100 aseptic clamp to DIN 11864-1), dimensions in mm (inch)

© Siemens 2020

Dimensional drawings (continued)

Hygienic encapsulated antenna (DN 50 aseptic flange to DIN 11864-2)

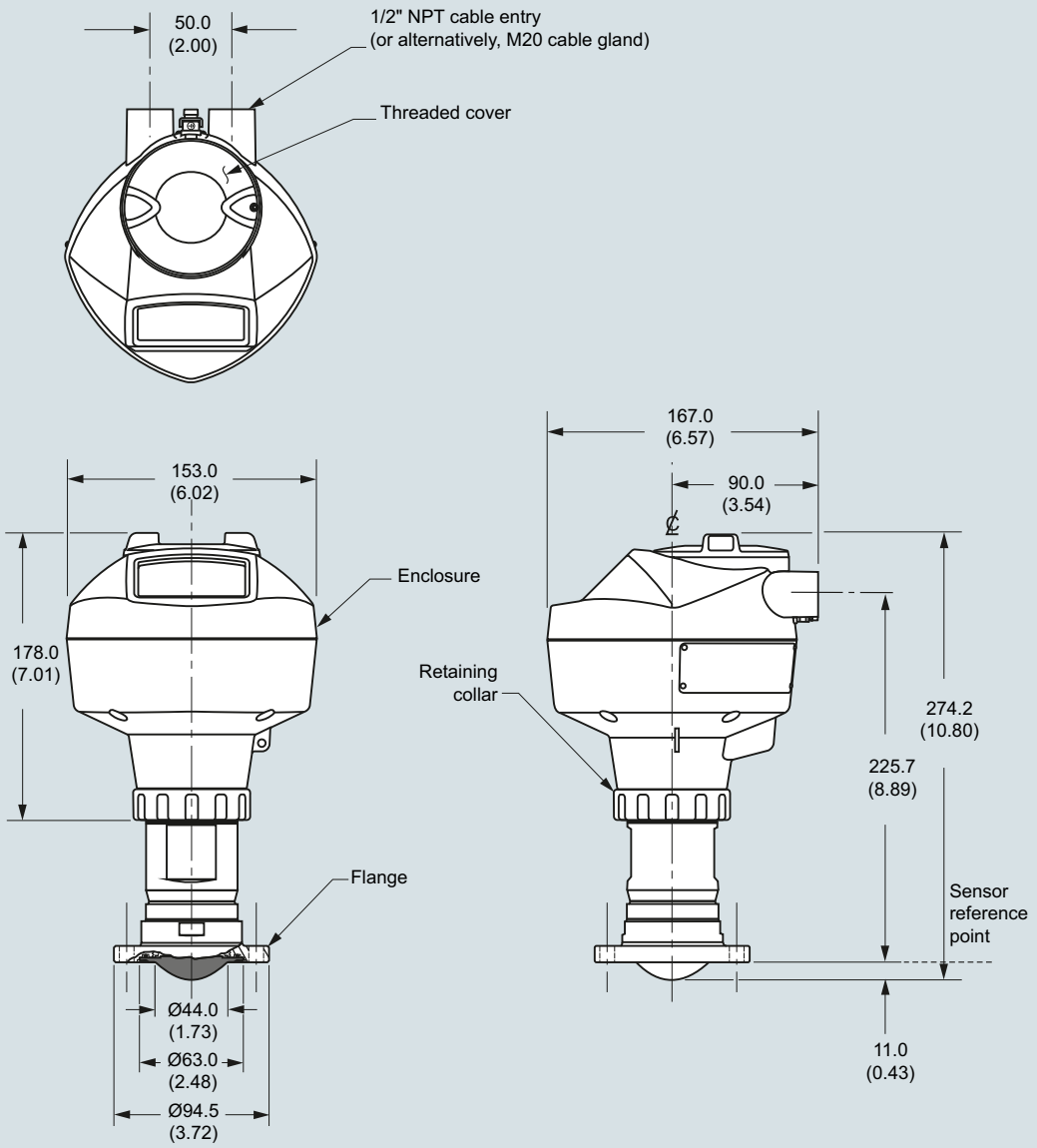

Note: Cut out of process connection and flange are shown for illustration purposes only.

SITRANS LR250 Hygienic Encapsulated Antenna (DN 50 aseptic flange to DIN 11864-2), dimensions in mm (inch)

© Siemens 2020

Dimensional drawings (continued)

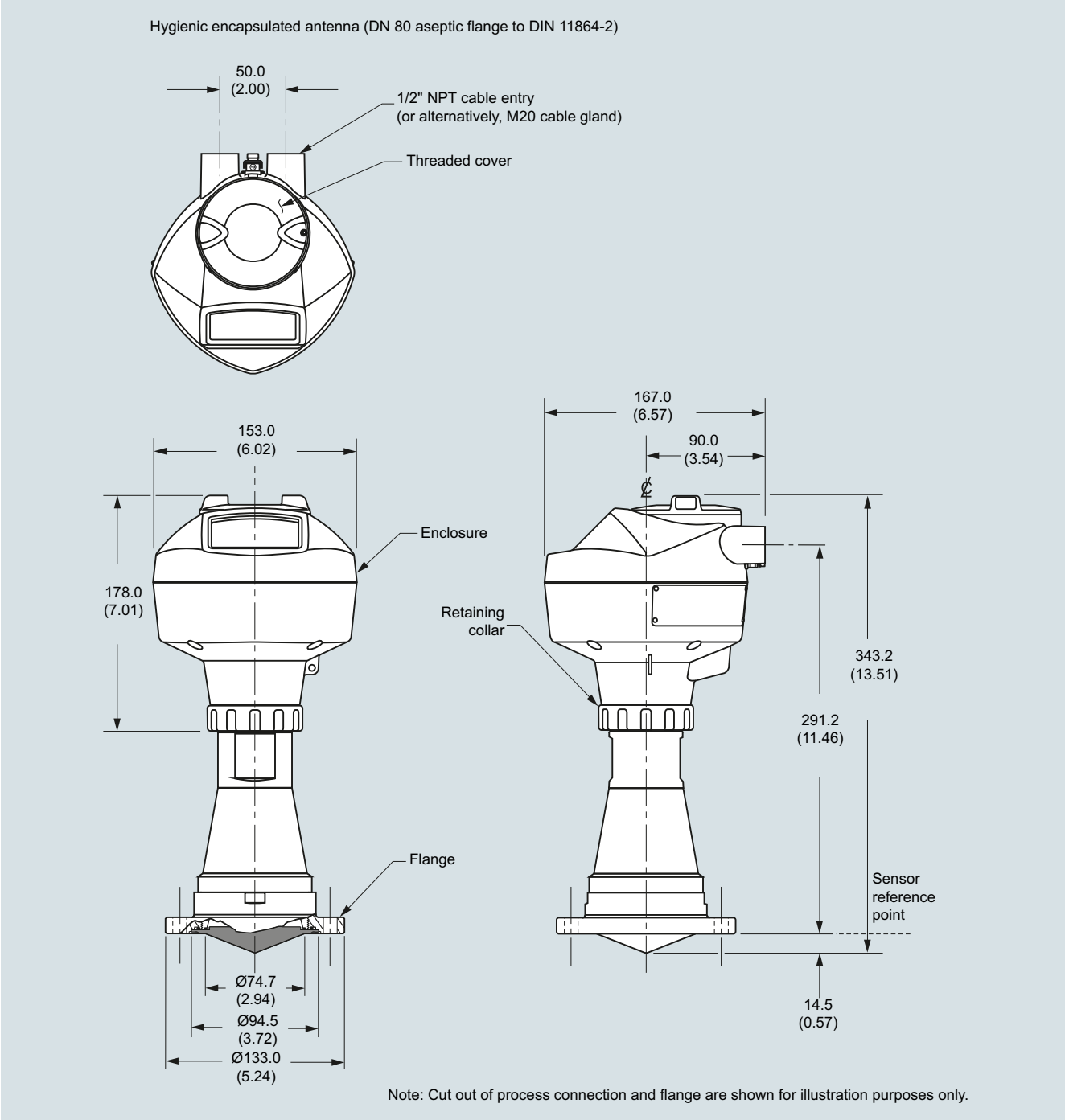

SITRANS LR250 Hygienic Encapsulated Antenna (DN 80 aseptic flange to DIN 11864-2), dimensions in mm (inch)

© Siemens 2020

Dimensional drawings (continued)

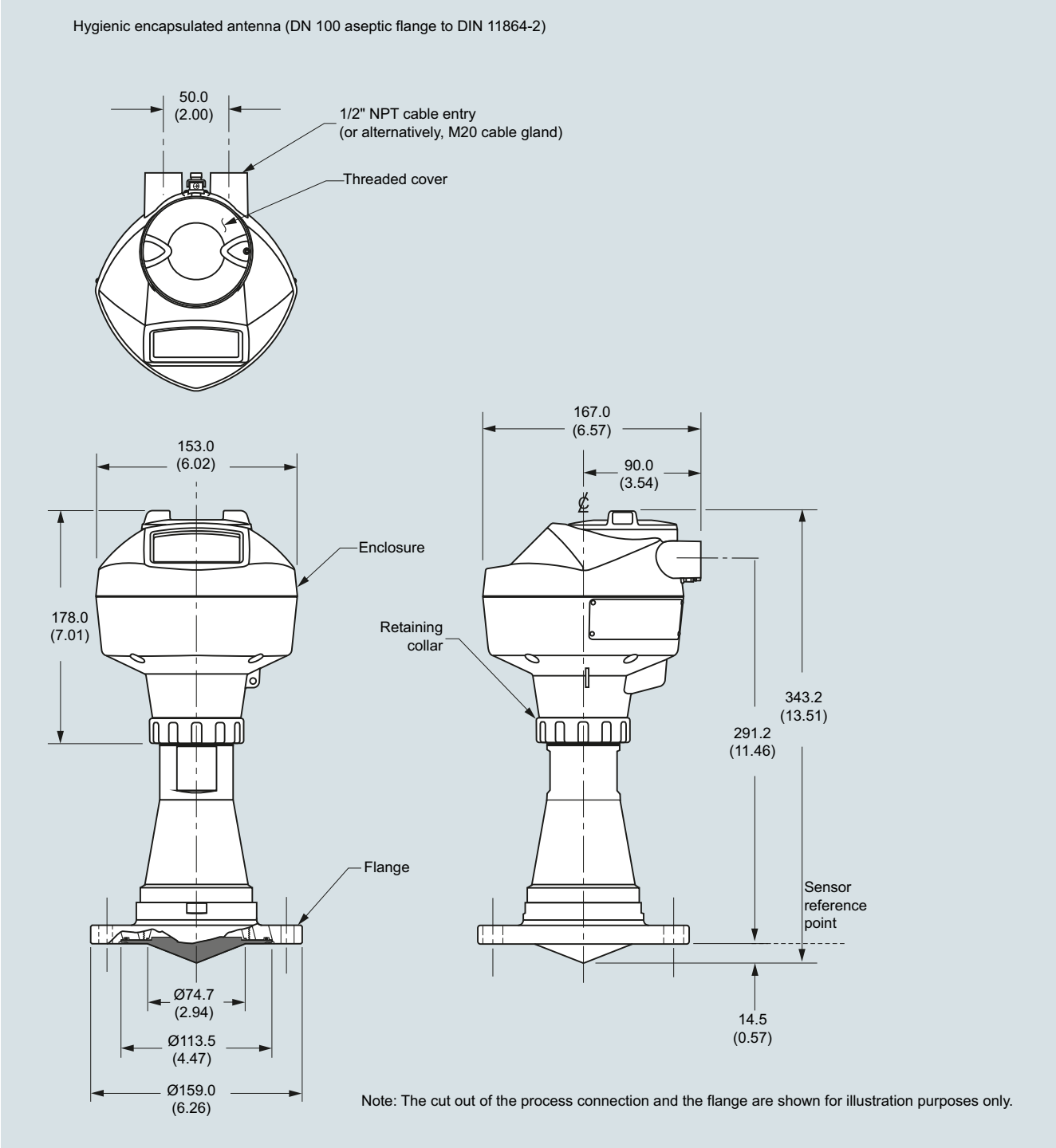

SITRANS LR250 Hygienic Encapsulated Antenna (DN 100 aseptic flange to DIN 11864-2), dimensions in mm (inch)

© Siemens 2020

Dimensional drawings (continued)

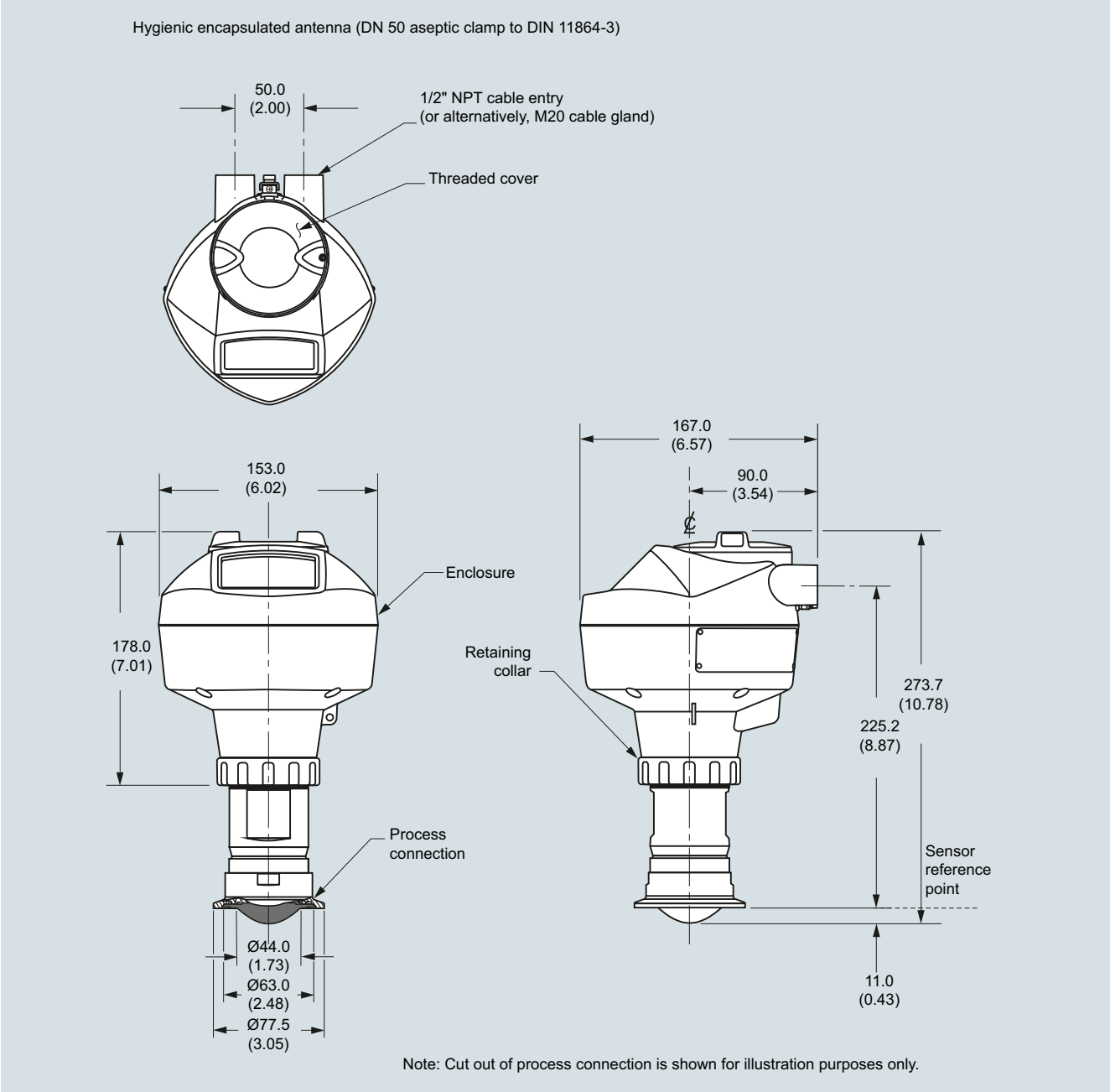

SITRANS LR250 Hygienic Encapsulated Antenna (DN 50 aseptic clamp to DIN 11864-3), dimensions in mm (inch)

© Siemens 2020

Dimensional drawings (continued)

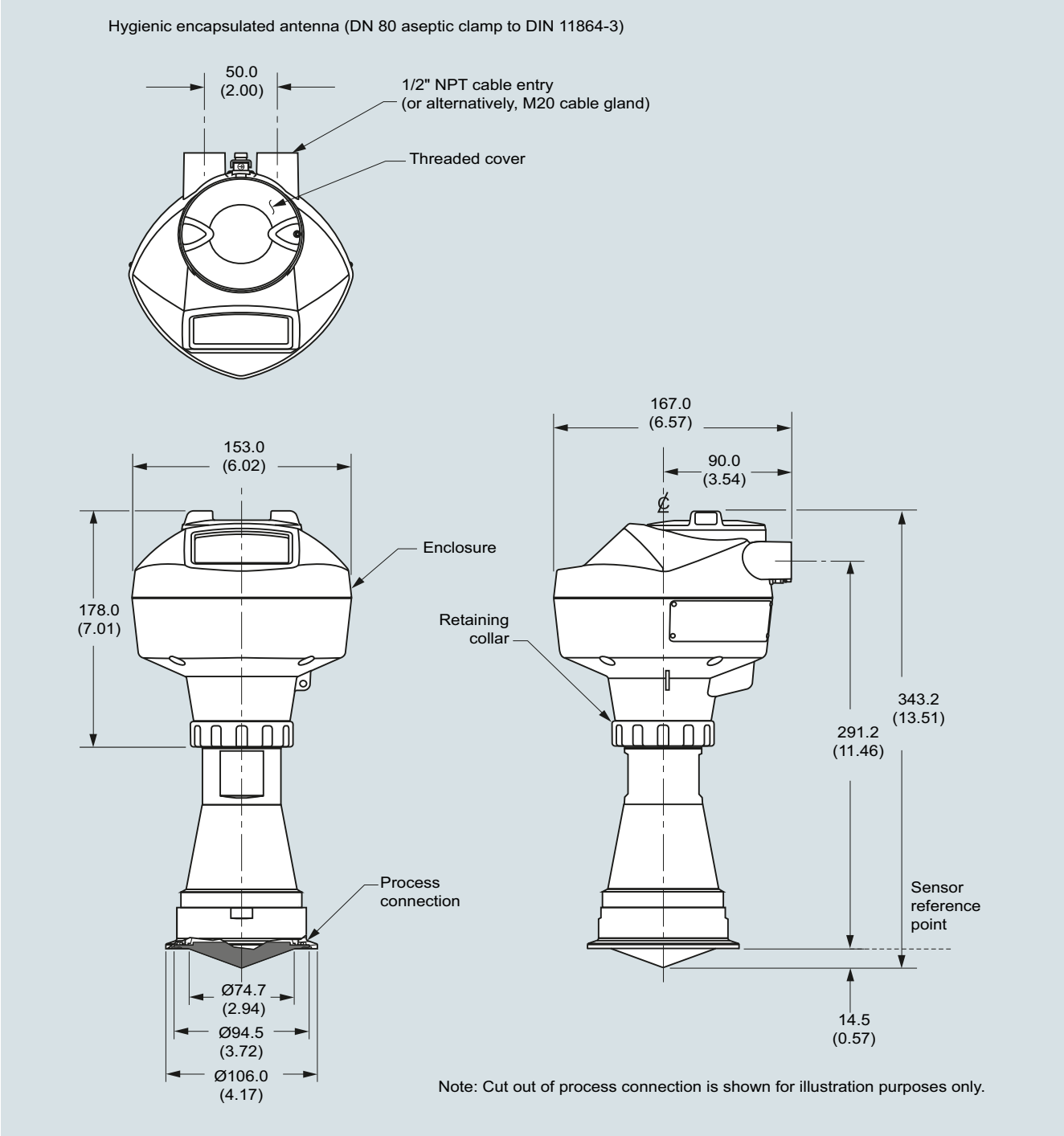

SITRANS LR250 Hygienic Encapsulated Antenna (DN 80 aseptic clamp to DIN 11864-3), dimensions in mm (inch)

© Siemens 2020

Dimensional drawings (continued)

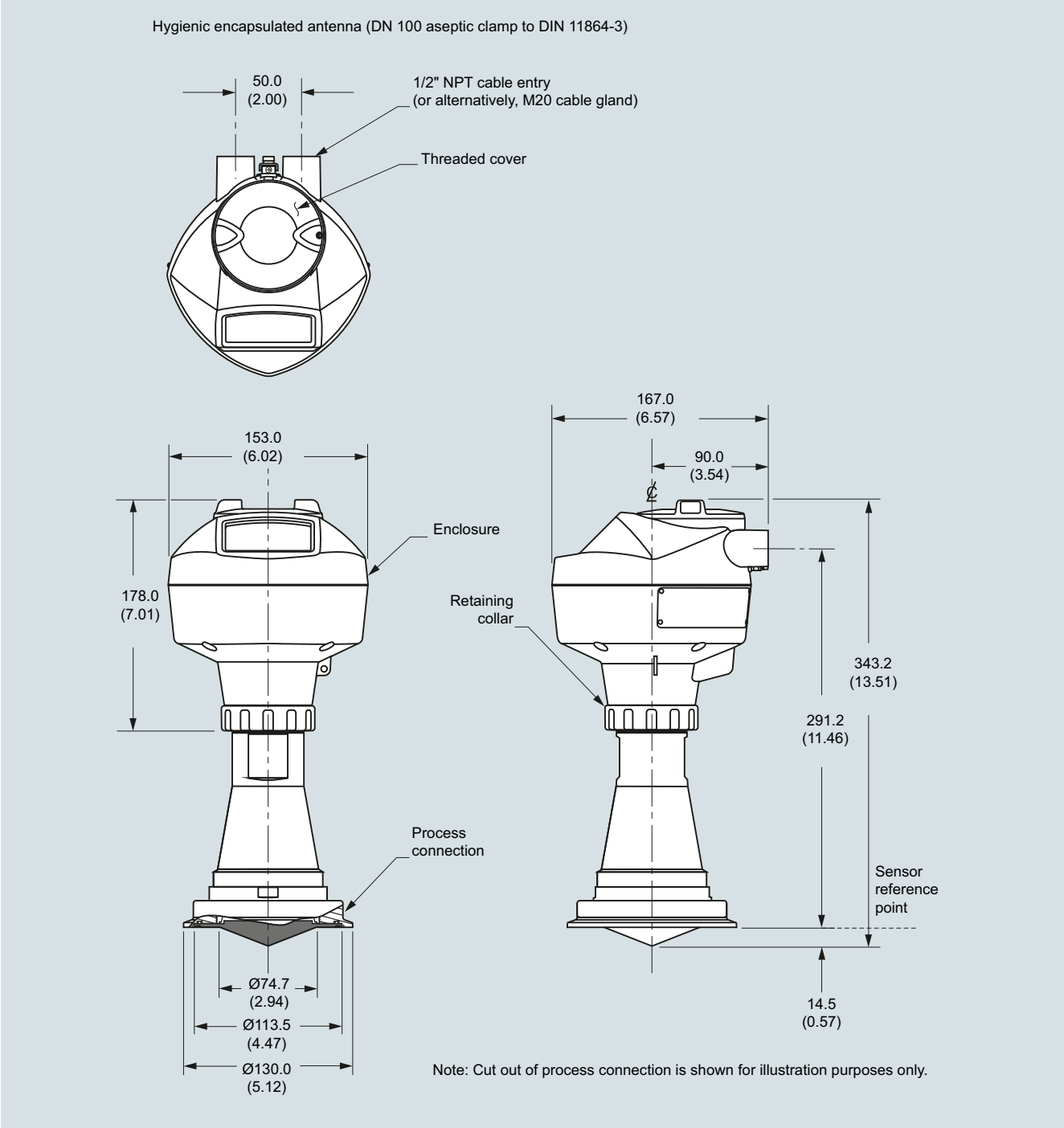

SITRANS LR250 Hygienic Encapsulated Antenna (DN 100 aseptic clamp to DIN 11864-3), dimensions in mm (inch)

© Siemens 2020

Dimensional drawings (continued)

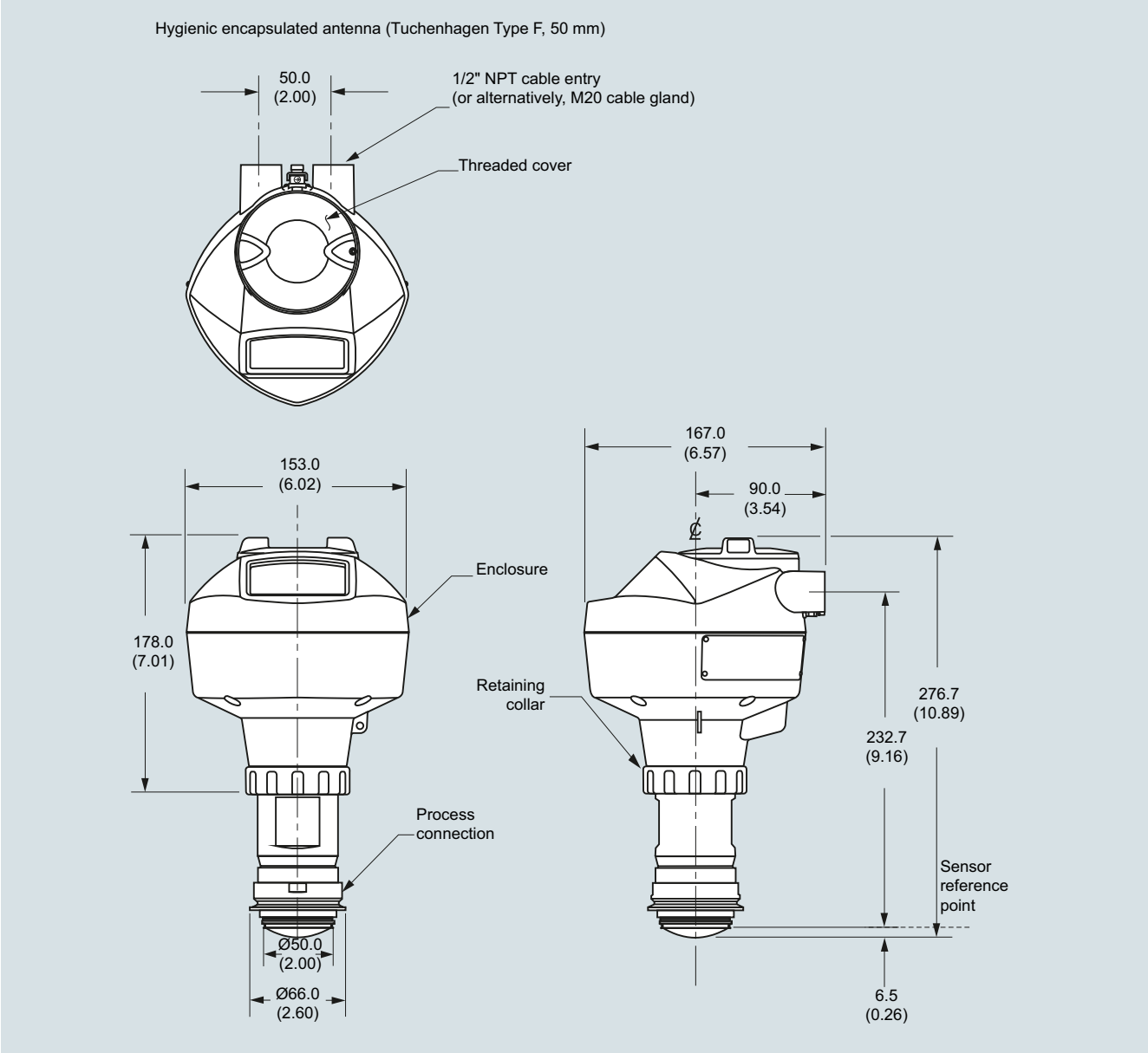

SITRANS LR250 Hygienic Encapsulated Antenna (Tuchenhagen Type F), dimensions in mm (inch)

© Siemens 2020

Dimensional drawings (continued)

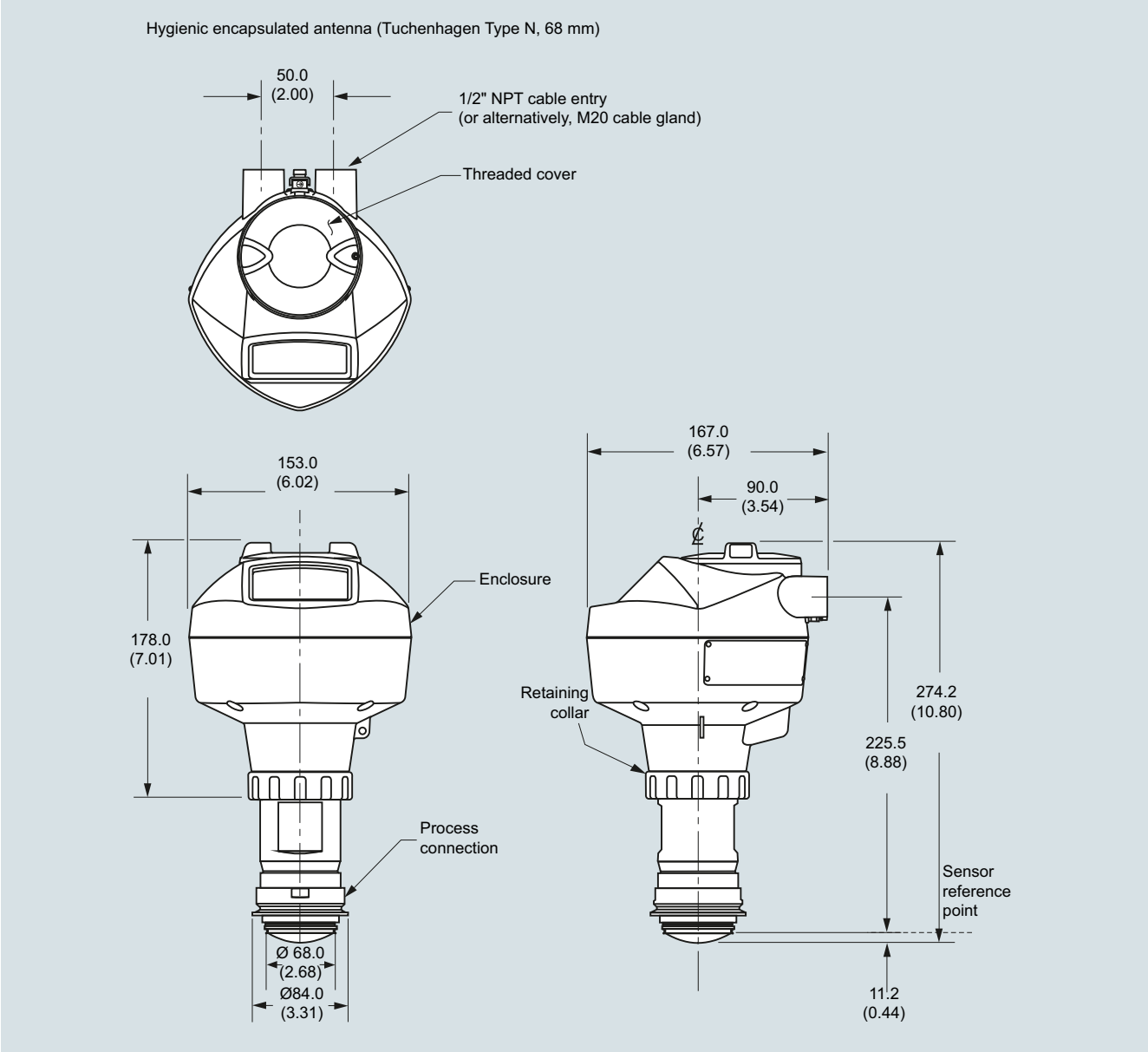

SITRANS LR250 Hygienic Encapsulated Antenna (Tuchenhagen Type N), dimensions in mm (inch)

© Siemens 2020

Circuit diagrams

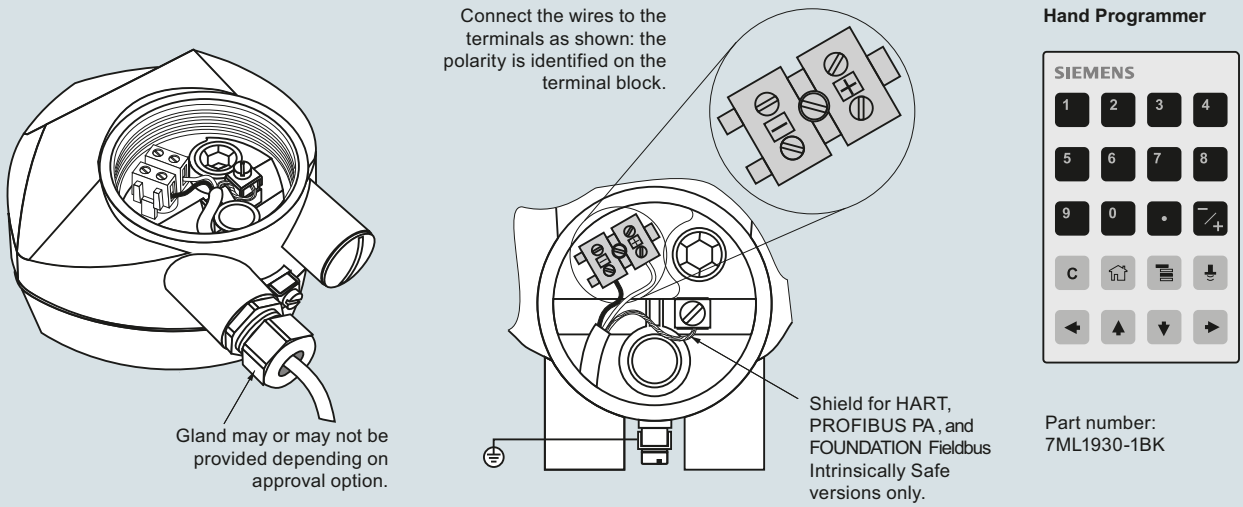

Notes:

1. DC terminal shall be supplied from a source providing electrical isolation between the input and output, to meet the applicable safety requirements of IEC 61010-1.
2. All field wiring must have insulation suitable for rated input voltages.
3. Use shielded twisted pair cable (14 ... 22 AWG) for HART version.
4. Separate cables and conduit may be required to conform to standard instrumentation wiring practices or electrical codes.

SITRANS LR250 connections

© Siemens 2020

Overview

The SITRANS LR460 is a 4-wire, 24 GHz FMCW radar level transmitter with extremely high signal-to-noise ratio and advanced signal processing for continuous monitoring of solids up to 100 m (328 ft). It is ideal for measurement in extreme dust and high temperature.

Benefits

- Process Intelligence for advanced signal processing and quick and easy adjustment
- Self-guided quick start wizard for plug and play startup
- 24 GHz provides superior reflective properties on solids surfaces
- 100 m (328 ft) range for long-range and difficult applications
- Easy Aimer optimizes signal quality on sloped surfaces
- Programming using infrared Intrinsically Safe handheld programmer or with SIMATIC PDM or HART handheld device

Application

SITRANS LR460 provides excellent results even during conditions of extreme dust. The integral Easy Aimer included on the SITRANS LR460 allows for easy positioning for optimum measurement on solids.

Process Intelligence onboard SITRANS LR460 means advanced signal processing is harnessed for reliable operation on both simple and difficult solids application.

SITRANS LR460 features a robust enclosure, flange and horn components. It is virtually unaffected by atmospheric or temperature conditions within the vessel.

An optional dust cap is available for sticky solids. Optional air purging is also available for extremely sticky applications.

Safe on-site local programming is simple using the Intrinsically Safe handheld programmer. SIMATIC PDM can be used for easy remote programming using HART or PROFIBUS PA.

The characteristics of 24 GHz and high signal-to-noise ratio contribute to exceptional signal reflection, regardless of the dielectric value of the medium.

- Key Applications: long-range dusty applications, cement powder, fly-ash, coal, flour, grain, plastics

Configuration

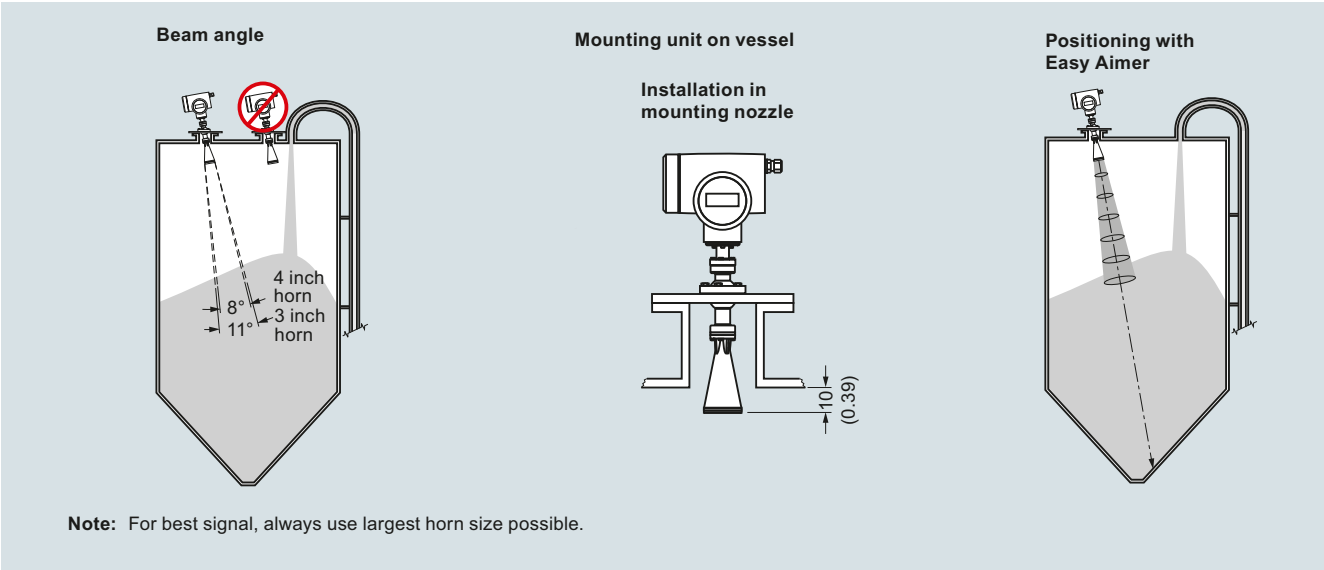

SITRANS LR460 installation, dimensions in mm (inch)

© Siemens 2020

Technical specifications

Mode of operation	
Measuring principle	FMCW radar level measurement
Frequency	24.2 ... 25.2 GHz FMCW
Measuring range	0.35 ... 100 m (1.15 ... 328.08 ft)
Output	
Analog output (HART)	
• Signal range	Optically isolated
• Load	Max. 600 Ω
• Fail-safe	mA signal programmable as high, low or hold (LOE)
Communication	HART, optional PROFIBUS PA
Digital output	Relay, NC or NO function, max. 50 V DC, max. 200 mA, rating 5 W
PROFIBUS PA protocol	Layer 1 and 2, Class A, Profile 3.01
Performance (Reference conditions according to IEC 60770-1)	
Non-linearity	Greater of 25 mm (1 inch) or 0.25 % of span (including hysteresis and non-repeatability), over the full ambient temperature range
Non-repeatability	≤ 10 mm (0.4 inch)
Rated operating conditions	
Amb. temperature for enclosure	-40 ... +65 °C (-40 ... +149 °F)
Storage temperature	-40 ... +65 °C (-40 ... +149 °F)
Location	Indoor/outdoor
Installation category	II
Pollution degree	4
Medium conditions	
Dielectric constant	$\varepsilon_r > 1.4$
Process temperature range	-40 ... +200 °C (-40 ... +392 °F)
Vessel pressure	0.5 bar g (7.25 psi g) maximum
Design	
Weight	Approx. 6.1 kg (13.4 lb) with 3 inch universal flange
Materials	
• Enclosure	Die-cast aluminum, painted
• Degree of protection	IP67/Type 4X/NEMA 4X/Type 6/ NEMA 6
• Cable inlet	2 x M20 x 1.5 or ½" NPT
Process connections	
• Universal flanges, 304 stainless steel, flat faced, with integral Easy Aimer	3 inch/80 mm, 4 inch/100 mm, 6 inch/150 mm (mates with flange EN 1092-1, ASME B16.5, or JIS B2238 bolt pattern), 0.5 bar g (7.25 psi g) max. pressure

Programming	
Intrinsically Safe Siemens handheld programmer (ordered separately)	Infrared receiver
• Approvals for handheld programmer	IS model: ATEX II 1G EEx ia IIC T4, CSA/FM Class I, Div. 1, Groups A, B, C, D T6 at max. ambient temperature of 40 °C (104 °F)
Handheld communicator	HART Communicator 375
PC	SIMATIC PDM
Display (local)	Alphanumeric LCD for readout and entry
Power supply	100 ... 230 V AC ± 15 % (50/60 Hz), 6 W (12 VA) or 24 V DC +25/-20 %, 6 W (optional)
Certificates and approvals	
General	$CSA_{US/C}$, CE, FM, RCM
Radio	European Radio (RED), Industry Canada, FCC, RCM
Hazardous Areas	CSA/FM Class II, Div. 1, Groups E, F, and G, Class III ATEX II 1D, 1/2 D, 2D T85 °C INMETRO ExtD A20 IP67 T85 °C EAC Ex DIP A20 T_a 85 °C IP67
Optional equipment	
Dust cap	PTFE
Air purge connection	1/8" NPT

© Siemens 2020

Selection and ordering data

	Article No.
SITRANS LR460 Radar level transmitter with horn ↗	**7ML5426-**
Continuous, non-contact, 100 m (328 ft) range, for challenging solids applications.	**0 ■ ■ ■ 0 - ■ ■ ■ 0**
↗ Click on the Article No. for the online configuration in the PIA Life Cycle Portal.	
Process connection	
Universal, flat faced, 0.5 bar g (7.25 psi g) maximum with integral Easy Aimer ball	
3 inch (80 mm)	**A**
4 inch (100 mm)	**B**
6 inch (150 mm)	**C**
Antenna	
3" horn antenna, fits 80 mm (3 inch) nozzles	**A**
3" horn antenna, fits 80 mm (3 inch) nozzles with 100 mm extension	**B**
3" horn antenna, fits 80 mm (3 inch) nozzles with 200 mm extension	**C**
3" horn antenna, fits 80 mm (3 inch) nozzles with 500 mm extension[1)]	**D**
3" horn antenna, fits 80 mm (3 inch) nozzles with 1 000 mm extension[1)]	**E**
4" horn antenna, fits 100 mm (4 inch) nozzles	**F**
4" horn antenna, fits 100 mm (4 inch) nozzles with 100 mm extension	**G**
4" horn antenna, fits 100 mm (4 inch) nozzles with 200 mm extension	**H**
4" horn antenna, fits 100 mm (4 inch) nozzles with 500 mm extension[1)]	**J**
4" horn antenna, fits 100 mm (4 inch) nozzles with 1 000 mm extension[1)]	**K**
Purge (self-cleaning) connection	
No purge connection	**0**
Purge connection	**1**
Output/Communication	
4 ... 20 mA, HART	**0**
PROFIBUS PA	**1**
Power supply/cable inlet	
100 ... 230 V AC	
• 2 x M20 x 1.5	**A**
• 2 x ½" NPT	**B**
24 V DC	
• 2 x M20 x 1.5	**C**
• 2 x ½" NPT	**D**
Approvals	
General Purpose, CSAUS/C, Industry Canada, FM, FCC, CE, RED, RCM	**A**
CSA/FM Class II, Div. 1, Groups E, F, and G, Class III	**B**
ATEX II ½ D T6, CE, RED	**C**

[1)] Available with Purge option 0 only.

	Order code
Further designs	
Please add "**-Z**" to Article No. and specify Order code(s).	
Stainless steel tag [69 x 50 mm (2.71 x 1.97 inch)]: Measuring-point number/identification (max. 27 characters); specify in plain text	**Y15**
Manufacturer's test certificate: M to DIN 55350, Part 18 and to ISO 9000	**C11**
Operating Instructions	
All literature is available to download for free, in a range of languages, at	
http://www.siemens.com/processinstrumentation/documentation	
Accessories	Article No.
Handheld programmer, Infra-red, Intrinsically Safe, EEx ia	**7ML5830-2AJ**
Dust cap, PTFE, for 3 inch/80 mm horn	**7ML1930-1BL**
Dust cap, PTFE, for 4 inch/100 mm horn	**7ML1930-1BM**
HART modem/USB (for use with a PC and SIMATIC PDM)	**7MF4997-1DB**
One metallic cable gland M20 x 1.5, rated -40 ... +80 °C (-40 ... +176 °F), HART[1)]	**7ML1930-1AP**
One metallic cable gland M20 x 1.5, rated -40 ... +80 °C (-40 ... +176 °F), PROFIBUS PA[1)]	**7ML1930-1AQ**
SITRANS RD100, loop powered display - see Chapter 7	**7ML5741-.....-.**
SITRANS RD150, remote digital display for 4 ... 20 mA and HART devices - see Chapter 7	**7ML5742-.....-....**
SITRANS RD200, universal input display with Modbus conversion - see Chapter 7	**7ML5740-.....-..**
SITRANS RD300, dual line display with totalizer and linearization curve and Modbus conversion - see Chapter 7	**7ML5744-.....-..**
For applicable back up point level switch - see point level measurement section	

[1)] Product shipped with plastic cable gland, rated to -20 °C. If -40 °C rating required, then metallic cable gland is recommended.

© Siemens 2020

Selection and ordering data

SITRANS LR460 Specials

	Article No.
Process connection part kits - non-pressure-rated	
SITRANS LR460,100 mm extension for horn antenna, no purge[1)]	**A5E01087872**
SITRANS LR460, 200 mm extension for horn antenna, no purge[1)]	**A5E01091262**
SITRANS LR460,100 mm extension for horn antenna with purge[1)]	**A5E01261979**
SITRANS LR460, 200 mm extension for horn antenna with purge[1)]	**A5E01261981**
SITRANS LR460, horn 2", no purge, no emitter[1)]	**A5E02083905**
SITRANS LR460, horn 3", no purge, no emitter[1)]	**A5E01623511**
SITRANS LR460, horn 4", no purge, no emitter[1)]	**A5E01623512**
SITRANS LR460, horn 2", with purge, no emitter[1)]	**A5E02083906**
SITRANS LR460, horn 3", with purge, no emitter[1)]	**A5E01623513**
SITRANS LR460, horn 4", with purge, no emitter[1)]	**A5E01623514**
SITRANS LR460, 3" universal flat faced flange[1)]	**A5E02303897**
SITRANS LR460, 4" universal flat faced flange[1)]	**A5E01259467**
SITRANS LR460, 6" universal flat faced flange[1)]	**A5E01261834**
SITRANS LR460 O-Rings for Easy Aimer[1)]	**A5E01261836**
Kit, Emitter for LR460[1)]	**A5E02360694**
Purge conversion kit - non-pressure-rated (no flange or extension included)	
SITRANS LR460 purge conversion, 2" horn[1)]	**A5E02083914**
SITRANS LR460 purge conversion, 3" horn[1)]	**A5E02083915**
SITRANS LR460 purge conversion, 4" horn[1)]	**A5E02083916**

Enclosure with electronics (LR460)	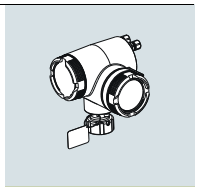 Article No.
SITRANS LR460 enclosure with board stack, HART communication, AC power, M20 cable inlet, approval option A, no process connection	**A5E02182085**
SITRANS LR460 enclosure with board stack, PROFIBUS PA communication, AC power, M20 cable inlet, approval option A, no process connection	**A5E02212422**
SITRANS LR460 enclosure with board stack, HART communication, AC power, NPT cable inlet, approval option A, no process connection	**A5E02212423**
SITRANS LR460 enclosure with board stack, PROFIBUS PA communication, AC power, NPT cable inlet, approval option A, no process connection	**A5E02212424**
SITRANS LR460 enclosure with board stack, HART communication, DC power, M20 cable inlet, approval option A, no process connection	**A5E02212425**
SITRANS LR460 enclosure with board stack, PROFIBUS PA communication, DC power, M20 cable inlet, approval option A, no process connection	**A5E02212426**
SITRANS LR460 enclosure with board stack, HART communication, DC power, NPT cable inlet, approval option A, no process connection	**A5E02212428**
SITRANS LR460 enclosure with board stack, PROFIBUS PA communication, DC power, NPT cable inlet, approval option A, no process connection	**A5E02212429**

1) Available with no pressure rating, 0.5 bar g maximum. Customers interested in a custom designed device should consult a local sales person. For more information, please visit http://www.automation.siemens.com/aspa_app.

© Siemens 2020

Dimensional drawings

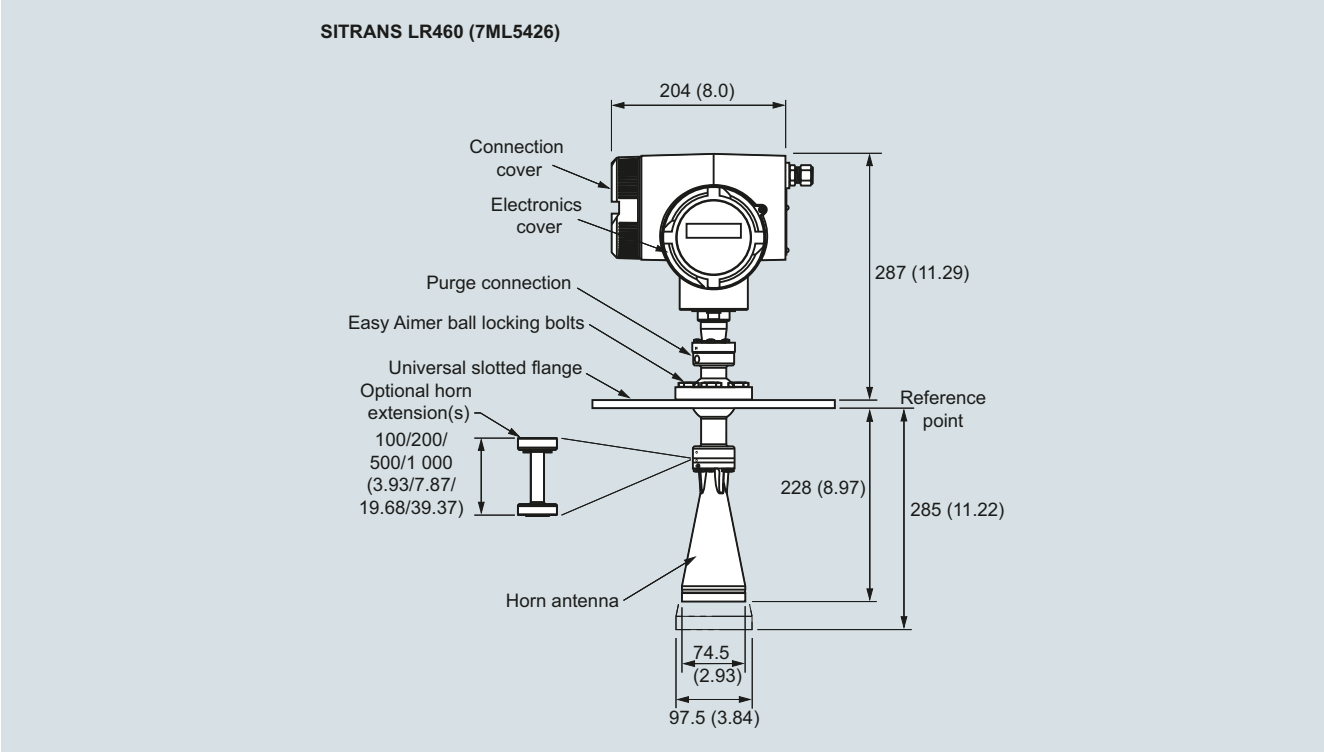

SITRANS LR460, dimensions in mm (inch)

© Siemens 2020

Circuit diagrams

AC version

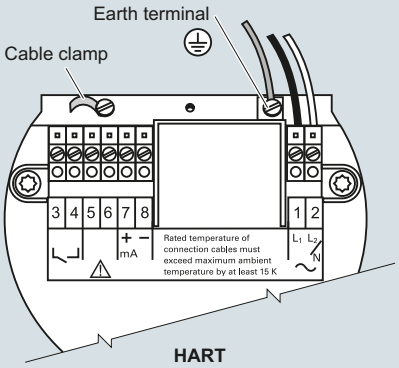

DC version

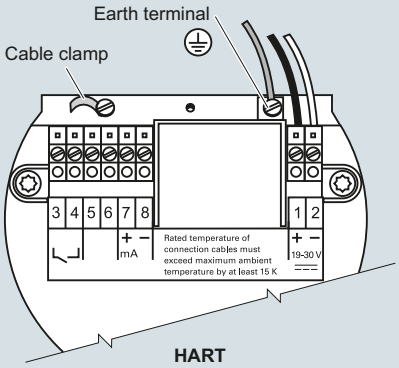

Hand programmer

SITRANS LR460
Part number:
7ML5830-2AJ

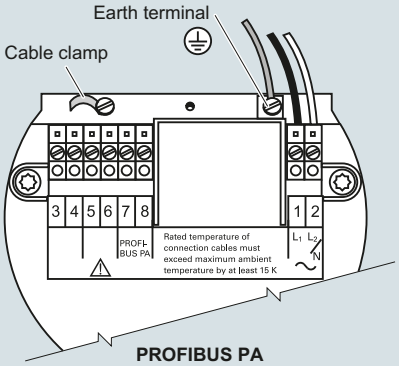

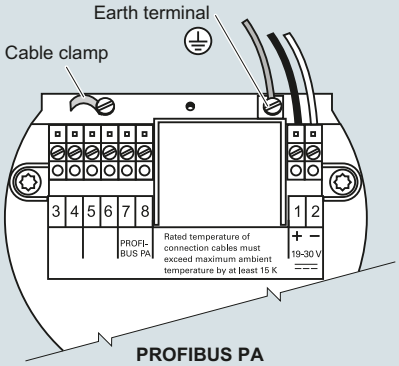

Notes

- Recommended torque on terminal clamping screws, 0.5 ... 0.6 Nm
- 4 ... 20 mA, PROFIBUS PA, DC input circuits, 14 ... 20 AWG, shielded copper wire
- AC input circuit, min. 14 AWG copper wire
- All field wiring must have insulation suitable for at least 250 V
- The equipment must be protected by a 15 A fuse or circuit breaker in the building installation

SITRANS LR460 connections

© Siemens 2020

Overview

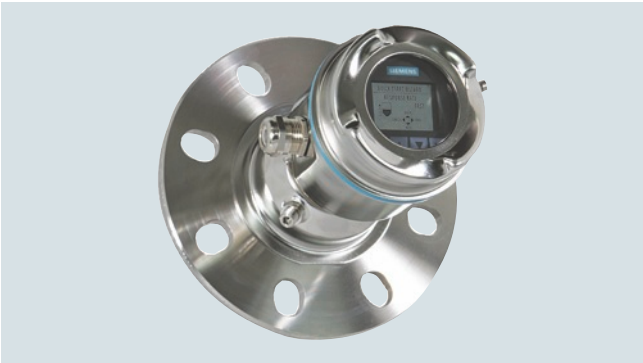

SITRANS LR560 2-wire, 78 GHz FMCW radar level transmitter for continuous monitoring of solids and liquids to a range of 100 m (328 ft).

Benefits

- Rugged stainless steel design for industrial applications
- 78 GHz high frequency provides very narrow beam, virtually no mounting nozzle noise, and optimal reflection from sloped solids
- Aimer option to direct beam to area of interest, such as draw point of cone
- Lens antenna is highly resistant to product buildup
- Air purge connection is included for self-cleaning of extremely sticky solids
- Local display interface (LDI) allows local programming and diagnostics

Application

SITRANS LR560's plug and play performance is ideal for most solids applications and long range liquid applications, including those with extreme dust and high temperatures to 200 °C (392 °F). Unique design allows safe and simple programming using the Intrinsically Safe handheld programmer without having to open the instrument's lid.
SITRANS LR560 includes an optional graphical local display interface (LDI) that improves setup and operation using an intuitive Quick Start Wizard, and echo profile display for diagnostic support. Startup is easy using the Quick Start wizard with a few parameters required for basic operation.
SITRANS LR560 measures practically any solids material to a range of 100 m (328 ft).

- Key Applications: cement powder, plastic powder/pellets, grain, coal, wood powder, fly ash

Configuration

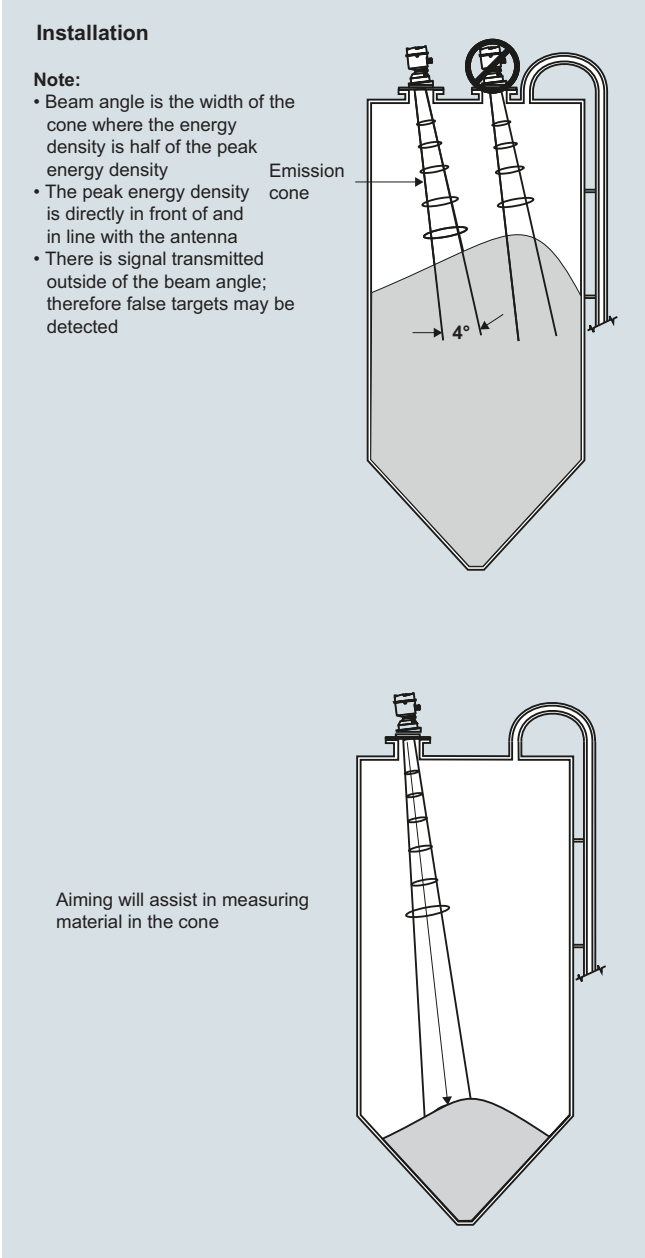

SITRANS LR560 installation, dimensions in mm (inch)

© Siemens 2020

Technical specifications

Mode of operation	
Measuring principle	Radar level measurement
Frequency	78 GHz FMCW
Minimum detectable distance	400 mm (15.75 inch) from sensor reference point
Maximum measuring range[1]	• 40 m (131 ft) version • 100 m (328 ft) version
Output	
Analog output	4 ... 20 mA
Communications	• HART • Optional: PROFIBUS PA
Fail-safe	• Programmable as high, low or hold (Loss of Echo) • NE43 programmable
Performance (according to reference conditions IEC60770-1)	
Maximum measured error (including hysteresis and non-repeatability)[2]	5 mm (0.2 inch)
Rated operating conditions (according to reference conditions IEC60770-1)	
Installation conditions	
• Location	Indoor/outdoor
Ambient conditions (enclosure)	
• Ambient temperature	-40 ... +80 °C (-40 ... +176 °F)
• Storage temperature	-40 ... +80 °C (-40 ... +176 °F)
• Installation category	I
• Pollution degree	4
Medium conditions	
Dielectric constant ε_r	> 1.6
Process temperature and pressure	See chart below
Design	
Enclosure	
• Construction	316L/1.4404 stainless steel
• Conduit entry	M20 x 1.5, or ½" NPT via adapter
• Purge inlet	1/8" NPT, 30 cfm at max. 100 psi
• Lens material	• 40 m version: PEI • 100 m version: PEEK Damage to lens could result from continuous purging/cleaning (due to abrasive solids). Recommended to purge/clean only a few seconds every hour.
• Degree of protection	Type 4X/NEMA 4X, Type 6/NEMA 6, IP68
• Weight	3.15 kg (6.94 lb) including 3 inch flange
• Optional local display interface	Graphic LCD, with bar graph representing level
Process connections	
• Universal flat-faced flanges[3]	• 3, 4, 6 inch/80, 100, 150 mm, 304 stainless steel • 3, 4, 6 inch/80, 100, 150 mm, 316L/1.4404 or 316L/1.4435 stainless steel
• Aimer flanges[3]	3, 4, 6 inch/80, 100, 150 mm, polyurethane powder-coated cast aluminum

Power supply	
4 ... 20 mA/HART	Nominal 24 V DC (max. 30 V DC) with max. 550 Ω
PROFIBUS PA	13.5 mA 9 ... 32 V DC, per IEC 61158-2
Certificates and approvals	
General	$CSA_{US/C}$, CE, FM
Radio	Europe (RED), FCC, Industry Canada, RCM
Hazardous	
• Europe/International	IECEx SIR 09.0149X ATEX II 1D, 1/2D, 2D Ex ta IIIC T139 °C Da ATEX II 3G Ex nA II T4 Gc Ex nL IIC T4 Gc
• US/Canada	FM/CSA Class II, Div. 1, Groups E, F, G Class III T4 FM/CSA Class I, Div. 2, Groups A, B, C, D, T4
• China	NEPSI Ex nA II T4 Ex nL IIC T4 DIP A20 TA, T139 °C
• Brazil	INMETRO Ex na IIC T4 Gc Ex ta IIIC T139 °C Da
Programming	
Intrinsically Safe Siemens handheld programmer	Infrared receiver
• Approvals for handheld programmer	IS model: ATEX II 1GD Ex ia IIC T4 Ga Ex iaD 20 T135 °C T_a = -20 ... +50 °C CSA/FM Class I, II, and III, Div. 1, Groups A, B, C, D, E, F, G, T6 T_a = 50 °C
Handheld communicator	HART communicator 375/475
PC	SIMATIC PDM, AMS, PACTware
Display (local)	Graphic local user interface including quick start wizard and echo profile displays

1) From sensor reference point

2) Under severe EMI/EMC environments per IEC61326-1 or NAMUR NE21, the device error may increase to a maximum of 25 mm (1 inch)

3) Universal flange mates with EN 1092-1 (PN16)/ASME B16.5 (150 lb)/JIS 2220 (10K) bolt hole pattern.

Process temperature and pressure

Version	Stainless steel -1 ... 0.5 bar -1 ... 3.0 bar	Aimer flange: -1 ... 0.5 bar	Aimer flange: -1 ... 3.0 bar
40 m	-40 ... +100 °C (-40 ... +212 °F)	-40 ... +100 °C (-40 ... +212 °F)	-40 ... +100 °C (-40 ... +212 °F)
100 m	-40 ... +200 °C (-40 ... +392 °F)	-40 ... +200 °C (-40 ... +392 °F)	-40 ... +120 °C (-40 ... +248 °F)

© Siemens 2020

Selection and ordering data

	Article No.
SITRANS LR560 Radar level transmitter with flush lens antenna ↗	**7ML5440-** ■ ■ ■ **0 0** - ■ ■ ■ ■
Continuous, non-contact, 100 m (328 ft) range, for general solids applications.	
Order handheld programmer separately	
↗ Click on the Article No. for the online configuration in the PIA Life Cycle Portal.	
Measurement and process temperature range	
40 m (131 ft) max range, -40 ... +100 °C	**0**
100 m (328 ft) max range, -40 ... +200 °C	**1**
Process connection	
Universal flat-faced flange fits ANSI/DIN/JIS flanges	
80 mm/3 inch, 304 stainless steel	**A**
100 mm/4 inch, 304 stainless steel	**B**
150 mm/6 inch, 304 stainless steel	**C**
80 mm/3 inch, 316L stainless steel	**D**
100 mm/4 inch, 316L stainless steel	**E**
150 mm/6 inch, 316L stainless steel	**F**
80 mm/3 inch, painted aluminum, with integral aimer[1]	**G**
100 mm/4 inch, painted aluminum, with integral aimer[1]	**H**
150 mm/6 inch, painted aluminum, with integral aimer[1]	**J**
Enclosure (with cable inlet)	
Stainless steel, 1 x ½" NPT	**A**
Stainless steel, 1 x M20 x 1.5 (plastic gland included)	**B**
Pressure rating	
0.5 bar g (7.5 psi g) maximum	**0**
3 bar g (40 psi g) maximum	**1**
Output/communication	
4 ... 20 mA, HART	**A**
PROFIBUS PA	**B**
Approvals	
General Purpose, FM, $CSA_{US/C}$, Industry Canada, FCC, CE, RED, RCM	**A**
CSA/FM Class I, Div. 2, Groups A, B, C, D, Class II, Div. 1, Groups E, F, G, Class III, Industry Canada, FCC	**B**
ATEX II 3G Ex nA/nL, 1D, ½D, 2D Ex ta, INMETRO, CE, RED, RCM	**C**
Local display interface	
Without	**1**
With	**2**

[1] Rated to 120 °C max. when used with Pressure rating option 1.

	Order code
Further designs	
Please add "**-Z**" to Article No. and specify Order code(s).	
Plug M12 with mating connector[1)2)3)]	**A50**
Plug 7/8" with mating connector[1)3)4)]	**A55**
Stainless steel tag [69 x 50 mm (2.71 x 1.97 inch)]: Measuring-point number/identification (max. 27 characters); specify in plain text	**Y15**
Manufacturer's test certificate: M to DIN 55350, Part 18 and to ISO 9000	**C11**
Material inspection Certificate Type 3.1 per EN 10204[5)]	**C12**
NAMUR NE43 compliant, device preset to failsafe < 3.6 mA[6)]	**N07**
Operating Instructions	
All literature is available to download for free, in a range of languages, at	
http://www.siemens.com/processinstrumentation/documentation	

Accessories	Article No.
Hand Programmer, Intrinsically safe	**7ML1930-1BK**
Local display interface	**7ML1930-1FJ**
Sun Shield Cover, 304 stainless steel	**7ML1930-1FK**
Housing lid with window	**7ML1930-1FL**
One metallic cable gland M20 x 1.5, rated -40 ... +80 °C (-40 ... +176 °F), HART[7)]	**7ML1930-1AP**
One metallic cable gland M20 x 1.5, rated -40 ... +80 °C (-40 ... +176 °F), PROFIBUS PA[7)]	**7ML1930-1AQ**
SITRANS RD100, loop powered display - see Chapter 7	**7ML5741-.....-.**
SITRANS RD150, remote digital display for 4 ... 20 mA and HART devices - see Chapter 7	**7ML5742-.....-....**
SITRANS RD200, universal input display with Modbus conversion - see Chapter 7	**7ML5740-.....-..**
SITRANS RD300, dual line display with totalizer and linearization curve and Modbus conversion - see Chapter 7	**7ML5744-.....-..**
For applicable back up point level switch - see point level measurement section	

[1] Available with Approval option A only.
[2] Available with Enclosure option B only.
[3] Available with Output/communication options B and C only.
[4] Only available with enclosure option A (NPT thread).
[5] Available with Pressure rating option 1 only.
[6] Available with Output/communication option A only.
[7] Product shipped with plastic cable gland, rated to -20 °C. If -40 °C rating required, then metallic cable gland is recommended.

© Siemens 2020

Selection and ordering data

	Article No.
SITRANS LR560 Specials	
SITRANS LR560 Electronics Modules	
SITRANS LR560 Electronics Module, HART, 100 m range, compatible with 7ML54401XX00XAXX, no enclosure or process connection included.	**7ML18303-AC**
SITRANS LR560 Electronics Module, PROFIBUS PA, 100 m range, compatible with 7ML54401XX00XBXX, no enclosure or process connection included.	**7ML18303-AH**
SITRANS LR560 Electronics Module, HART, 40 m range, compatible with 7ML54400XX00XAXX, no enclosure or process connection included.	**7ML18303-AK**
SITRANS LR560 Electronics Module, PROFIBUS PA, 40 m range, compatible with 7ML54400XX00XBXX, no enclosure or process connection included.	**7ML18303-AL**
SITRANS LR560 Miscellaneous Spare Kits	
Kit, lid gasket, EPDM	**7ML18303-AA**
Kit, wrench for 4 inch and 6 inch Aimers	**7ML18303-AB**
Kit, O-rings for 3 inch Aimer	**7ML18303-AD**
Kit, O-rings for 4 inch Aimer	**7ML18303-AE**
Kit, O-rings for 6 inch Aimer	**7ML18303-AF**
Kit, lid screw and purge plug set with hex keys	**7ML18303-AG**
Kit, lid, no Window	**7ML18303-AP**

Customers interested in a custom designed device should consult a local sales person. For more information, please visit http://www.automation.siemens.com/aspa_app.

Options

Handheld programmer

Article number:
7ML1930-1BK

Sun shield cover
(304 stainless steel)

Article number:
7ML1930-1FK

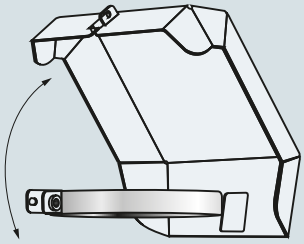

SITRANS LR560 handheld programmer and sun shield cover

© Siemens 2020

Characteristic curves

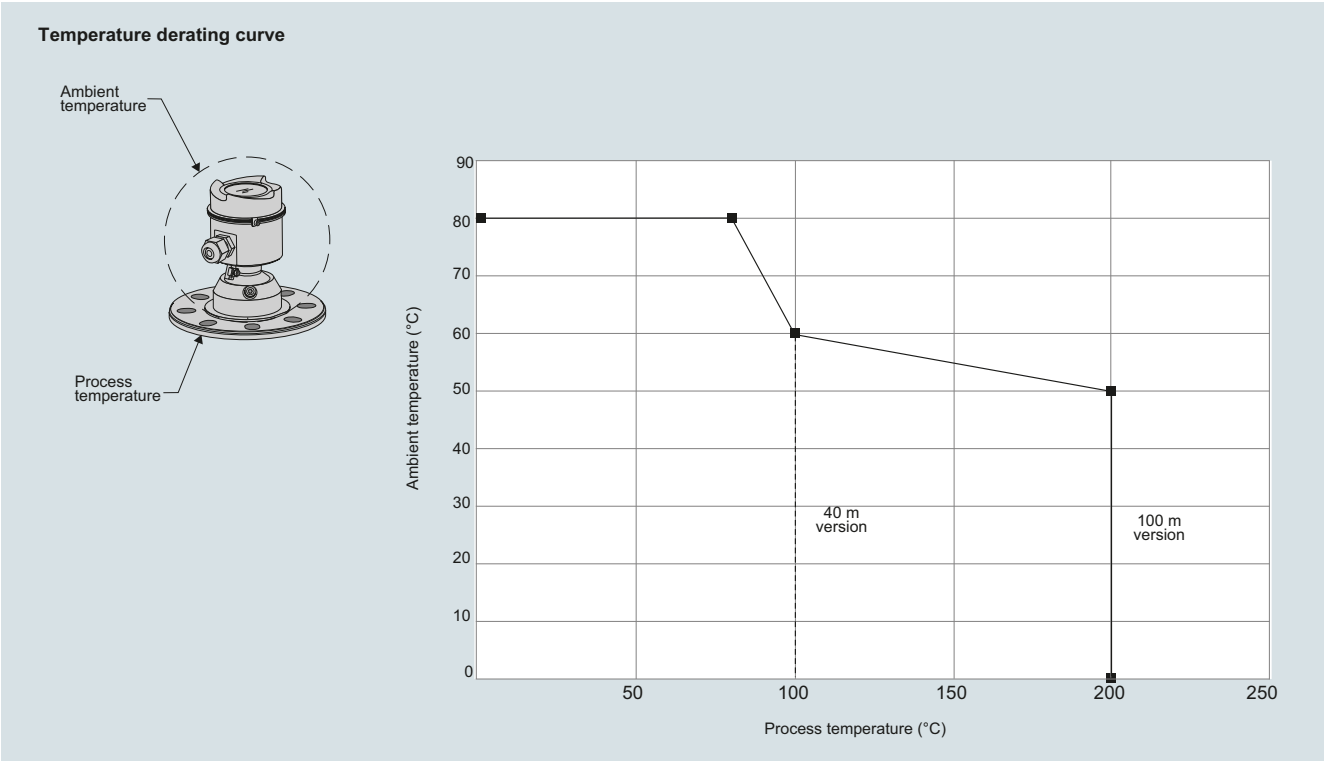

SITRANS LR560 temperature derating curve

Dimensional drawings

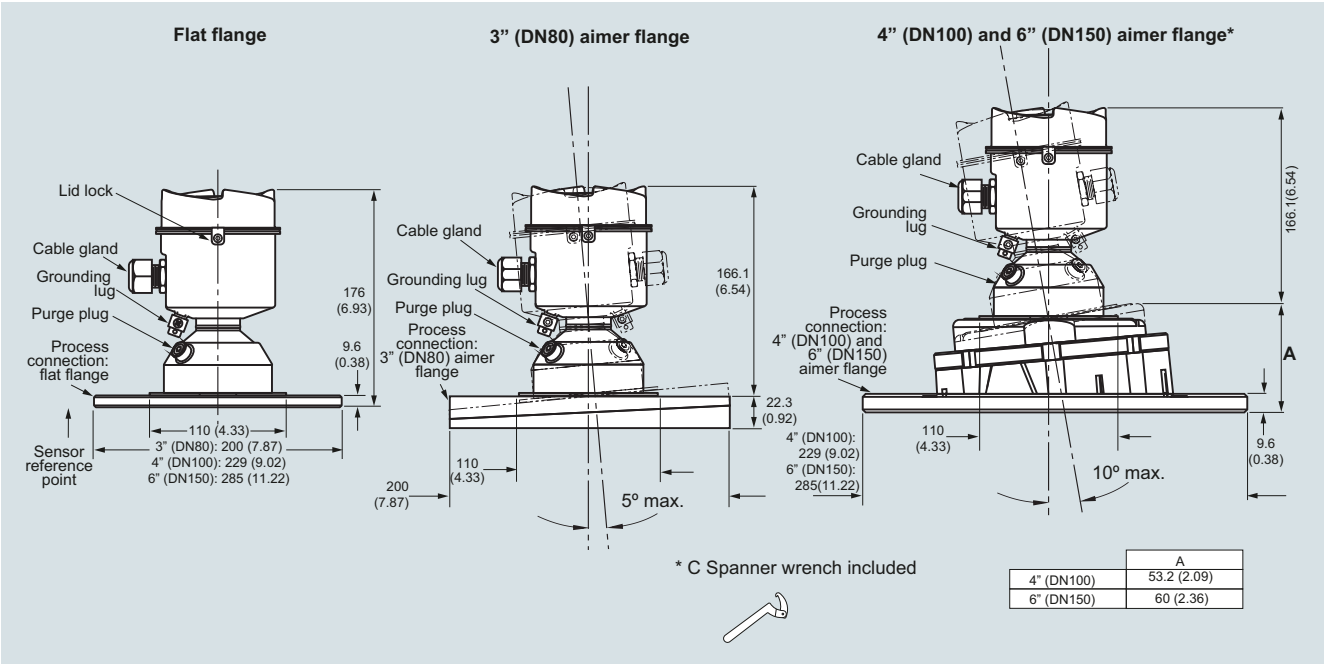

	A
4" (DN100)	53.2 (2.09)
6" (DN150)	60 (2.36)

SITRANS LR560, dimensions in mm (inch)

© Siemens 2020

Circuit diagrams

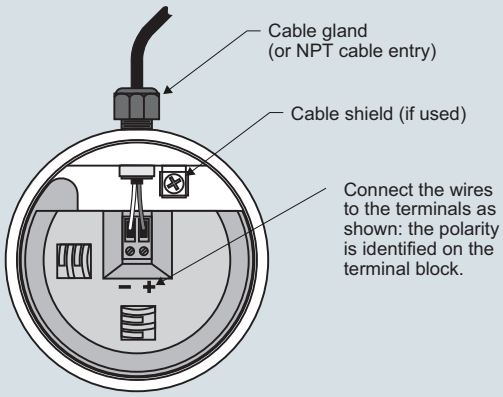

Notes:
1. Depending on the approval rating, glands and plugs may be supplied with your instrument.
2. DC terminal shall be supplied from a source providing electrical isolation between the input and output, to meet the applicable safety requirements of IEC 61010-1.
3. All field wiring must have insulation suitable for rated input voltages.
4. Use shielded twisted pair cable (14 ... 22 AWG) for HART version.
5. Separate cables and conduit may be required to conform to standard instrumentation wiring practices or electrical codes.

SITRANS LR560 connections

© Siemens 2020

Overview

Introduction

Guided Wave Radar transmitters use TDR (time domain reflectometry).

Time Domain Reflectometry (TDR)

TDR uses pulses of electromagnetic (EM) energy to measure distances or levels. When a pulse reaches a dielectric discontinuity (created by media surface), part of the energy is reflected. The greater the dielectric difference, the greater the amplitude (strength) of the reflection.

The SITRANS LG includes a transmitter and waveguide that has a characteristic impedance in air and is used as a probe. When part of the probe is immersed in a material other than air, there is lower impedance due to the increase in the dielectric. When an EM pulse is sent down the probe and meets the dielectric discontinuity, a reflection is generated.

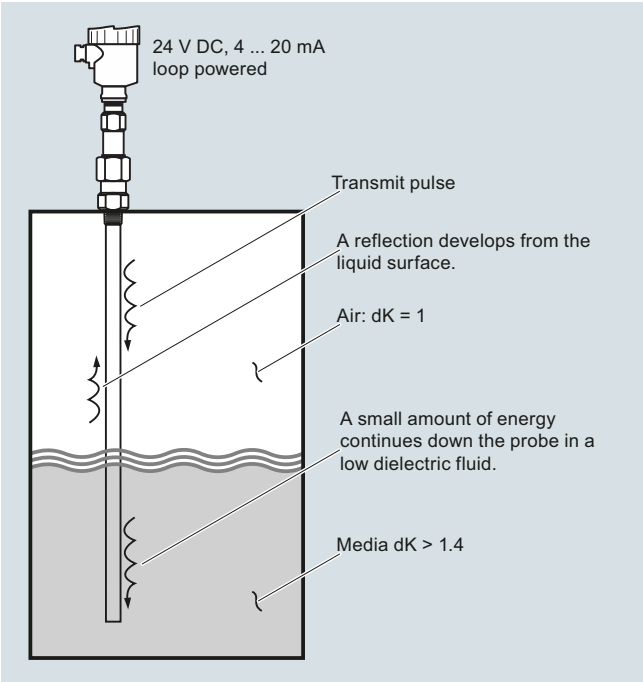

Mode of operation

Interface Detection

The SITRANS LG, is a transmitter capable of measuring both an upper level and an interface level. The upper liquid must have a dielectric constant between 1.6 and 10 and the two liquids have a difference in dielectric constants greater than 10. A typical application would be oil over water, with the upper layer of oil being non-conductive with a dielectric constant of approximately 2 and the lower layer of water being very conductive with a dielectric constant of approximately 80. This interface measurement can only be accomplished when the dielectric constant of the upper medium is lower than the dielectric constant of the lower medium.

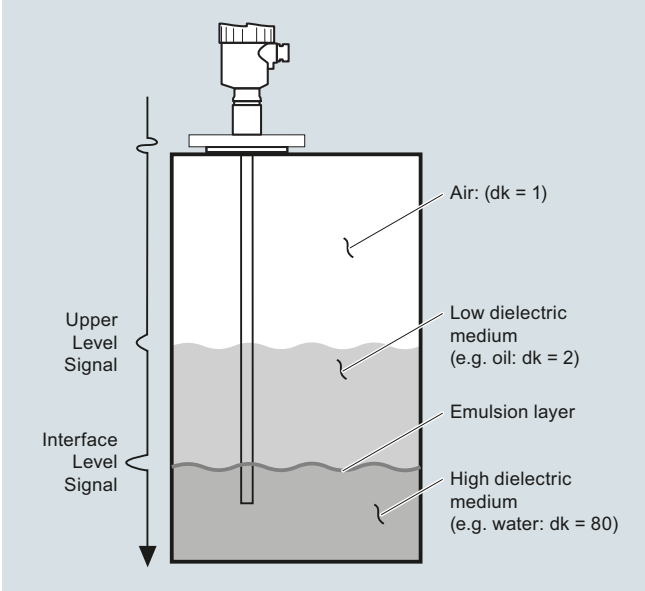

© Siemens 2020

Overview

The Siemens SITRANS LG series are guided wave radar transmitters for level, level/interface, and volume measurement of liquids and solids. The SITRANS LG product line can handle changes in process conditions, high temperatures and pressures, and steam.

Benefits

- High accuracy to +/- 2 mm
- Advanced Diagnostics available for high degree of safety
- Simple menu driven display offers ease of setup
- Large range of options offers reliability in most continuous level measurement applications
- Ease of maintenance through module design and field replaceable and adjustable probe options
- Perfect solution for wide range of applications from storage to interface with options for extreme pressure and temperature conditions
- Universally applicable in liquids, interface, slurries and solids
- Highly immune to buildup using auto learn function
- Ability to measure in loss of echo situations with probe end tracking
- Suitable for API 2350
- Convenient access using USB and remote interface accessories

Application

The SITRANS LG series comes in four different models, depending on the applications, level of performance, and functionality required:

- SITRANS LG240 offers configuration options for your hygienic and corrosive application requirements
- SITRANS LG250 Highly flexible solution for liquid level and interface applications. Extremely versatile offering solutions for storage, separation of materials or difficult ammonia applications
- SITRANS LG260 Ideal for measuring level in medium range solids applications including; grains, plastics, and cement
- SITRANS LG270 offers configuration options for extreme conditions including high temperature and high pressure applications such as: harsh applications found in chemical, HPI and energy industries for example, LPG gas tanks, steam boilers and distillation columns

Configuration

Mounting on nozzle

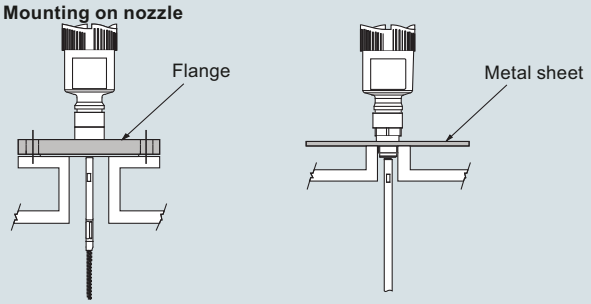

Installation in non-metal vessel

The guided microwave principle requires a metal surface on the process fitting. Therefore, use in plastic vessels etc. an instrument version with flange (from DN 50) or place a metal sheet, Ø > 200 mm (8 inch), beneath the process fitting when screwing it in.
Make sure that the plate has direct contact with the process fitting

Mounting socket

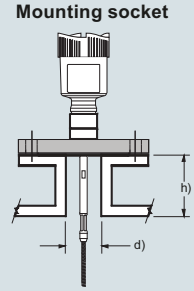

If possible, avoid sockets, mount the sensor flush with the vessel top. If this is not possible, use short sockets with small diameter. Higher sockets or sockets with a bigger diameter can generally be used. They simply increase the upper blocking distance. Check if this is relevant for your measurement. In such cases, always carry out a false signal suppression after installation.

d	h
DN 40 ... DN 150	≤ 150
> DN 150 ... DN 200	≤ 100

Socket must be installed flush

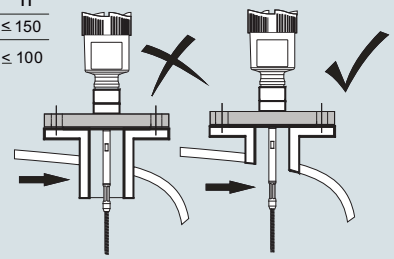

When welding the socket, make sure that the socket is flush to the vessel top.
Before beginning the welding work, remove the electronics module from the sensor. By doing this, you avoid damage to the electronics through inductive coupling.

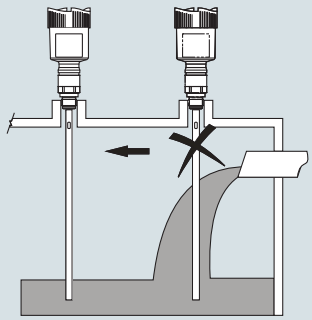

Inflowing medium

Do not mount the instruments in or above the filling stream. Make sure that you detect the product surface, not the inflowing product.

SITRANS LG Series installation

© Siemens 2020

Configuration (continued)

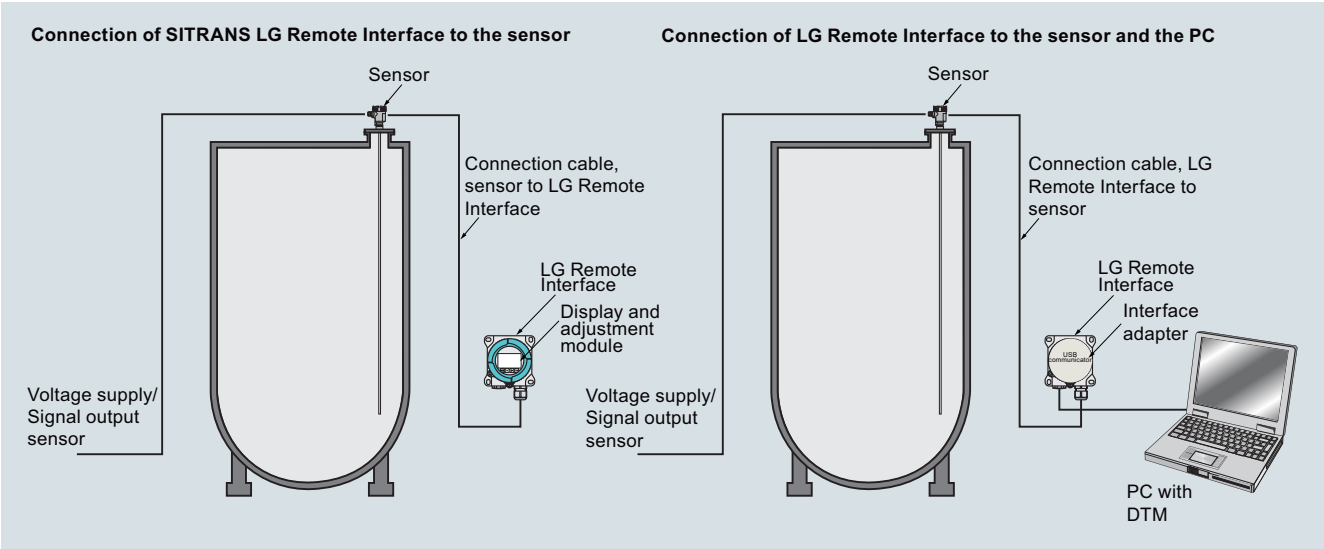

SITRANS LG Remote Interface installation

© Siemens 2020

Technical specifications

Mode of operation	
Measuring principle	Guided wave radar measurement
Measuring range	300 ... 75 000 mm (11.81 ... 2 952.75 inch)
Output	
mA analog output with HART digital signal	4 ... 20 mA/HART (SIL optional)
Output range	
• Analog	Current: minimum 3.8 mA, maximum 20.5 mA
• Startup current	≤ 10 mA for 5 ms after switching on, ≤ 3.6 mA
Diagnostic alarm	Failure signal current output (adjustable): last valid measured value, ≥ 21 mA, ≤ 3.6 mA
Digital communication	HART Version 7 x and multidrop compatible
Modbus	Modbus RTU, Modbus ASCII
PROFIBUS PA	PROFIBUS PA profile 3.02
FOUNDATION Fieldbus	FOUNDATION Fieldbus protocol Physical layer according to IEC 61158-2
Performance	Process reference conditions according to DIN EN 61298-1
• Measuring cycle time	< 500 ms
• Step response time	≤ 3 s
• Temperature Effects	The measurement error from the process conditions is in the specified pressure and temperature range of below 1 %
Non-linearity	
• Coaxial	
• Single rod probes	
• Interface models	See manual for more details
Resolution and repeatability	Accuracy +/- 2 mm (0.08 inch)
Accuracy	
• Coaxial/rod/cable probes	+/- 2 mm (0.08 inch)
• Interface models	+/- 5 mm (0.197 inch)
	Note: Typical deviation, Interface measurement. See manual for full explanation.
Rated operating conditions	
Ambient temperature for enclosure	-40 ... +80 °C (-40 ... +176 °F)
Storage temperature	-40 … +80 °C (-40 … +176 °F)
LCD readable temperature range	-40 ... +80 °C (-40 ... +176 °F) with display heated option
Location	Indoor/outdoor
Installation category	II
Pollution degree	2
Relative Humidity	20 ... 85 %
Medium conditions	
Dielectric constant	dK ≥ 1.4 (configuration dependent)
	Note: for measurement below 1.4 use probe end tracking.
Process temperature range	-196 ... +450 °C (-321 ... +842 °F)
Vessel pressure	-1 … +400 bar (-100 … +40 000 kPa)

Design	
Instrument weight (dependent on process fitting) - see manual for further details	Approx. 0.8 ... 8 kg (0.176 ... 17.64 lb)
Materials	
• Enclosure	• Plastic housing plastic PBT (Polyester) • Aluminum die-cast housing, aluminum die-cast AlSi10 mg, powder-coated- basis: polyester • Stainless steel housing, precision casting 316L • Stainless steel housing, electropolished 316L
• Degree of protection	• Type 4/NEMA 4, IP65 • Plastic housing IP66/IP67 • Aluminum and stainless steel housings are IP66/68
• Cable inlet	2 x M20 x 1.5 or 2 x ½" NPT
Process connections	
• Pipe thread, cylindrical (ISO 228 T1)	G¾" A, G1" A, G1½" A according to DIN 3852-A
• American pipe thread, conical (ASME B1.20.1)	¾" NPT, 1" NPT, 1½" NPT
• Flanged	DIN from DN 25, ASME from 1"
• Hygienic	Hygienic fittings
Process seal instrument side	FKM (SHS FPM 70C3 GLT), FFKM (Kalrez 6375), EPDM (A+P 70.10-02), silicone FEP coated (A+P FEPO-SEAL) or Borosilicate glass GPC 540
Second line of defense (glass seal) (optional)	Borosilicate glass GPC 540 Note: The second line of defense is a second level of the process separation in the form of a gas-tight feedthrough in the lower part of the housing, preventing product from penetrating into the housing.
Programming	
Local	Four button, menu-driven data entry
Handheld communicator	Hart communicator
PC	SIMATIC PDM, AMS, PACTware
Power	
2-wire Hart version	9.6 ... 35 V DC
4-wire versions	9.6 … 48 V DC, 20 … 42 V AC, 50/60 Hz, and 90 … 253 V AC, 50/60 Hz
Modbus	8 … 30 V DC
PROFIBUS PA	9 ... 32 V DC
FOUNDATION Fieldbus	9 ... 32 V DC
	Note: see manual for specific power based on ordered options
Certificates and approvals	
Hazardous approvals:	ATEX, FM, CSA, IECex Note: other regional approvals are available
Hygienic approvals:	EHEDG, FDA
Overfill protection	WHG, Vlarem
Ship approval	ABS, CCS, GL, BV, LR

© Siemens 2020

Technical specifications (continued)

	SITRANS LG240	**SITRANS LG250**	**SITRANS LG260**	**SITRANS LG270**
Industries	**Food, Beverage and Pharmaceutical**	**Chemical/HPI/Power/General**	**Cement, power generation, food, processing, mineral processing, mining**	**Chemical/HPI/Power/General**
Applications	Hygienic and corrosive applications	Liquids, storage and process vessels with agitators, vaporous liquids, interface	Cement, fly ash, grain, coal, flour, plastics	Aggressive applications in liquids, storage and process vessels with agitators, vaporous liquids, high temperatures and pressures, low dielectric media
Range	32 m	75 m	60 m	60 m
Performance	± 2 mm	± 2 mm	± 2 mm	± 2 mm
Temperature	-40 … +150 °C (-40 ... +302 °F)	-40 … +200 °C (-40 ... +392 °F)	-40 … +200 °C (-40 ... +392 °F)	-196 … +450 °C (-320.8 ... +842 °F)
Process pressure				
Standard version	-	-1 … +40 bar/ -100 … +4 000 kPa (-14.5 … +580 psig), depending on the process fitting	-	-
With borosilicate glass lead-through	-	-1 … +100 bar/ -100 … +10 000 kPa (-14.5 … +1 450 psig), depending on the process fitting	-	-
Communications	• 4 ... 20 mA/HART • Modbus: Modbus RTU, Modbus ASCII • PROFIBUS PA • FOUNDATION Fieldbus • SIMATIC PDM • DTM/FDT for PACTware • Fieldcare	• 4 ... 20 mA/HART • Modbus: Modbus RTU, Modbus ASCII • PROFIBUS PA • FOUNDATION Fieldbus • SIMATIC PDM • DTM/FDT for PACTware • Fieldcare	• 4 ... 20 mA/HART • Modbus: Modbus RTU, Modbus ASCII • PROFIBUS PA • FOUNDATION Fieldbus • SIMATIC PDM • DTM/FDT for PACTware • Fieldcare	• 4 ... 20 mA/HART • Modbus: Modbus RTU, Modbus ASCII • PROFIBUS PA • FOUNDATION Fieldbus • SIMATIC PDM • DTM/FDT for PACTware • Fieldcare

© Siemens 2020

Selection and ordering data

	Article No.	
SITRANS LG240 Guided radar level transmitter ↗	**7ML5880-**	Ord. code
Continuous, contact, 32 m (105 ft) range. Monitors level and interface in aggressive liquids. Ideal for hygienic applications.	■■■■■ - ■■■■	■■■
↗ Click on the Article No. for the online configuration in the PIA Life Cycle Portal.		
Approvals		
General purpose (CSA, FM, CE)	0 A	
Overfill protection (WHG; VLAREM)[11]	0 C	
ATEX II 1G, ½G, 2G Ex ia IIC T6[14]	0 E	
ATEX II 1G, ½G, 2G Ex ia IIC + Overfill (WHG; VLAREM)[11]	0 F	
ATEX II 1G, ½G 2G Ex ia IIC + ATEX II 1D, ½D, 2D IP6x[1)15)17)]	0 H	
ATEX II ½G, 2G Ex d ia IIC T6[3)13)16)]	0 J	
ATEX II ½G, 2G Ex d ia IIC + ATEX II ½D, 2D IP6x[3)13)16)17)]	0 K	
ATEX II 1D, ½D, 2D IP6x[1)17)18)]	0 N	
ATEX II 1G, II ½G, II 2G Ex ia IIC T6 ... T1 Ga, Ga/Gb, Gb /IEC Ex ia IIC T6 ... T1 Ga, Ga/Gb, Gb[1)14)]	0 W	
IEC Ex ia IIC T6[14]	0 P	
IEC Ex ia IIC T6 + IEC IP6x T tD[1)15)17)]	0 Q	
IEC Ex d ia IIC T6[3)13)16)]	0 R	
IEC Ex d ia IIC T6 + IEC IP6x T tD[3)13)16)]	0 S	
FM (NI) Class I, Div. 2, Groups A, B, C, D2[9)12)16)]	1 A	
FM (IS) Class I, II, III, Div. 1, Groups A, B, C, D, E, F, G[9)15)]	1 B	
FM (XP-AIS) Class I, II, III, Div. 1, Groups A, B, C, D, E, F, G[3)13)16)]	1 C	
CSA (NI) Class I, Div. 2, Groups A, B, C, D; (DIP) Class II, III, Div. 1, Groups E, F, G[1)17)]	1 E	
CSA (IS) Class I, II, III, Div. 1, Groups A, B, C, D, E, F, G[14]	1 F	
CSA (XP-IS) Class I, II, III, Div. 1, Groups A, B, C, D, E, F, G[3)13)16)]	1 G	
NEPSI Ex ia IIC T6[14]	2 A	
NEPSI Ex ia IIC T6 + DIP A20/21 TA T*[1)15)]	2 B	
NEPSI Ex d ia IIC T6[9)10)13)16)]	2 C	
NEPSI Ex d ia IIC T6 + DIP A20/21 TA T*[9)10)13)16)]	2 D	
NEPSI DIP A20/21 TA T*[1)16)]	2 G	
INMETRO Ex ia IIC T6 ... T1[14]	3 A	
INMETRO Ex t IIIC T* IP6X, Da, Da/Db, Da/Dc, Db + Ex ia IIC T6, Ga, Ga/Gb[1)10)15)]	3 B	
INMETRO Ex d ia IIC T6 ... T1[9)10)13)16)]	3 C	
INMETRO Ex t IIIC T* IP6X, Da, Da/Db, Da/Dc, Db + Ex d ia IIC T6 Ga/Gb[9)10)13)16)]	3 D	
INMETRO Ex t IIIC T* IP6X, Da, Da/Db, Da/Dc, Db[1)10)13)16)]	3 G	
Korea KC ex free area	6 A	
GOST-R/EAC 0 Ex ia IIC T1 ... T6 X[14]	5 A	
GOST-R/EAC 0 Ex ia IIC T1 ... T6 X + Ex t IIIC T ... IP66[1)15)]	5 B	
GOST-R/EAC 1 Ex d ia IIC T1 ... T6 X[9)10)13)16)]	5 C	
GOST-R/EAC 1 Ex d ia IIC T1 ... T6 X + Ex t IIIC T ... IP66[9)10)13)16)]	5 D	
Note: Version/Material, Process fitting/ Material, and Length options are available only with options of corresponding type.		
Probe version/Material		
Probe cable ø 4 mm (0.16 inch) with gravity weight/PFA[17]	A	
Probe exchangeable rod ø 8 mm (0.31 inch)/1.4435 (Basle standard)[17]	B	
Probe exchangeable rod ø 8 mm (0.31 inch)/ 1.4435 (Basle standard) can be autoclaved[17]	C	
Probe rod ø 10 mm (0.39 inch)/PFA[17]	D	
Probe exchangeable rod (ø 8 mm) /1.4435 (BN2), electropolished (Ra < 0.38 µm)[17]	E	

	Article No.	
SITRANS LG240 Guided radar level transmitter	**7ML5880-**	Ord. code
Continuous, contact, 32 m (105 ft) range. Monitors level and interface in aggressive liquids. Ideal for hygienic applications.	■■■■■ - ■■■■	■■■
Process fitting/Material		
Clamp 2" PN 16 (ø 64 mm) DIN 32676, ISO2852/1.4435 (BN2)	0 0	
Clamp 2" PN 16 (ø 64 mm) DIN 32676, ISO2852/PTFE-TFM 1600	0 1	
Clamp 2 1/2" PN 10 (ø 77.5 mm) DIN 32676, ISO2852/1.4435 (BN2)	0 2	
Clamp 2 1/2" PN 10 (ø 77.5 mm) DIN 32676, ISO2852/PTFE-TFM 1600	0 3	
Clamp 3" PN 10 (ø 91 mm) D N 32676, ISO2852/1.4435 (BN2)	0 4	
Clamp 3" PN 10 (ø 91 mm) DIN 32676, ISO2852/PTFE-TFM 1600	0 5	
Clamp 4" PN 6 (ø 119 mm) DIN 32676, ISO2852/1.4435(BN2)	0 6	
Clamp 4" PN 6 (ø 119 mm) DIN 32676, ISO2852/PTFE-TFM 1600	0 7	
Clamp 1½" PN 16 (ø 50.5 mm) DIN 32676, ISO2852/1.4435 (BN2)	4 0	
Bolting DN 32, PN 40 DIN 11851/1.4435(BN2)	0 8	
Bolting DN 32, PN 40 DIN 11851/PTFE-TFM 1600	1 0	
Bolting DN 40, PN 40 DIN 11851/1.4435 (BN2)	1 1	
Bolting DN 40, PN 40 DIN 11851/PTFE-TFM 1600	1 2	
Bolting DN 50, PN 25 DIN 11851/1.4435(BN2)	1 3	
Bolting DN 50, PN 25 DIN 11851/PTFE-TFM 1600	1 4	
Bolting DN 65, PN 25 DIN 11851/PTFE-TFM 1600	1 5	
Flange DN 25, PN 40 Form C, DIN 2501/PTFE-TFM 1600	2 0	
Flange DN 40, PN 40 Form C, DIN 2501/PTFE-TFM 1600	2 1	
Flange DN 50, PN 40 Form C, DIN 2501/PTFE-TFM 1600	2 2	
Flange DN 50, PN 40 Form V13, DIN 2513/PTFE-TFM 1600	2 3	
Flange DN 65, PN 40 Form C, DIN 2513/PTFE-TFM 1600	2 4	
Flange DN 80, PN 40 Form C, DIN 2501/PTFE-TFM 1600	2 5	
Flange DN 100, PN 16 Form C, DIN 2501/PTFE-TFM 1600	2 6	
Flange DN 80, PN 40 EN 1092-1 Form B1/PTFE-TFM 1600	2 7	
Flange DN 100, PN 40 EN 1092-1 Form B1/PTFE-TFM 1600	2 8	
Flange 2" 150 lb RF, ASME B16.5/PTFE-TFM 1600	3 0	
Flange 2" 300 lb RF, ASME B16.5/PTFE-TFM 1600	3 1	
Flange 3" 150 lb RF, ASME B16.5/PTFE-TFM 1600	3 2	
Flange 4" 150 lb RF, ASME B16.5/PTFE-TFM 1600	3 3	
Note: The pressure limit for all PTFE coated versions is 16 bar (per manual).		

© Siemens 2020

Selection and ordering data

SITRANS LG240 Guided radar level transmitter	**Article No. 7ML5880-**												Ord. code
Continuous, contact, 32 m (105 ft) range. Monitors level and interface in aggressive liquids. Ideal for hygienic applications.	■	■	■	■	■	-	■	■	■	■		■	■	■
Electronics														
Two-wire 4 ... 20 mA/HART						0								
Four-wire Modbus[3)13)]						1								
Two-wire 4 ... 20 mA/HART with SIL qualification[9)]						2								
Four-wire 4 ... 20 mA/HART; 90 ... 253 V AC; 50/60 Hz[3)13)]						3								
Four-wire 4 ... 20 mA/HART; 9.6 ... 48 V DC; 20 ... 42 V AC[3)13)]						4								
PROFIBUS PA[9)]						5								
FOUNDATION Fieldbus[9)]						6								
Seal/Process temperature														
Without glass seal/-40 ... +150 °C (-40 ... +302 °F)[2)]								A						
FFKM (Kalrez 6221)/-20 ... 150 °C (-4 ... +302 °F)[4)]								B						
EPDM (Freudenberg 70 EPDM 291)/ -20 ... 130 °C (-4 ... +266 °F)[4)]								C						
Housing/Protection/Cable														
Note: for installation of remote display, 7ML5840, with LG two chamber housing options, contact PVC														
Plastic IP66/IP67 M20 x 1.5/blind stopper									A					
Plastic IP66/IP67 1/2" NPT/blind stopper									B					
Aluminum/IP66/IP68 (0.2 bar) M20 x 1.5/blind stopper									C					
Aluminum/IP66/IP68 (0.2 bar) 1/2" NPT/ blind stopper									D					
Aluminum double chamber/IP66/IP68 (0.2 bar) M20 x 1.5/blind stopper									E					
Aluminum double chamber/IP66/IP68 (0.2 bar) 1/2" NPT/blind stopper									F					
Stainless steel (precision casting) 316L/IP66/IP68 (0.2 bar) M20 x 1.5/ blind stopper									G					
Stainless steel (precision casting) 316L/IP66/IP68 (0.2 bar) 1/2" NPT/ blind stopper									H					
Stainless steel (electropolished) 316L/IP66/IP68 (0.2 bar) M20 x 1.5/ blind stopper									J					
Stainless steel (electropolished) 316L/IP66/IP68 (0.2 bar) 1/2" NPT/ blind stopper									K					
Stainless steel double chamber/IP66/IP68 (0.2 bar) M20 x 1.5/blind stopper									L					
Stainless steel double chamber/IP66/IP68 (0.2 bar) 1/2" NPT/blind stopper									M					
Aluminum/IP66/IP68 (0.2 bar) M20 x 1.5/cable gland stainless steel									N					
Aluminum double chamber/IP66/IP68 (0.2 bar) M20 x 1.5/cable gland stainless steel									P					
Stainless steel (precision casting) 316L/IP66/IP68 (0.2 bar) M20 x 1.5/ cable gland stainless steel									Q					
Stainless steel (electropolished) 316L/IP66/IP68 (0.2 bar) M20 x 1.5/ cable gland stainless steel									R					
Aluminum single chamber / IP66/IP68 (0.2 bar) M20 x 1.5/cable gland brass nickel-plated									W					
Aluminum double chamber / IP66/IP68 (0.2 bar) M20 x 1.5/cable gland brass nickel-plated									X					

SITRANS LG240 Guided radar level transmitter	**Article No. 7ML5880-**												Ord. code
Continuous, contact, 32 m (105 ft) range. Monitors level and interface in aggressive liquids. Ideal for hygienic applications.	■	■	■	■	■	-	■	■	■	■		■	■	■
Stainless steel single chamber (precision casting) / IP66/IP68 (0.2 bar) M20 x 1.5/ cable gland brass nickel-plated								Y						
Stainless steel double chamber / IP66/IP68 (0.2 bar) M20 x 1.5/cable gland brass nickel-plated								S						
Remote stainless steel single chamber housing, electropolished/IP66/IP67 with cable outlet IP68 (electronics separated by cable);M20 x 1.5/blind plug[10)]								Z			Q	2	A	
Remote plastic single chamber housing /IP66/IP67 with cable outlet IP68 (electronics separated by cable); M20 x 1.5/blind plug[10)]								Z			Q	2	B	
Lengths														
Rod ø 8 mm (0.31 inch)/1.4435 (Basle standard 300 ... 4 000 mm)														
300 ... 1 000 mm (11.81 ... 39.37 inch)[6)]									0					
1 001 ... 2 000 mm (39.41 ... 78.74 inch)[6)]									1					
2 001 ... 3 000 mm (78.78 ... 118.11 inch)[6)]									2					
3 001 ... 4 000 mm (118.15 ... 157.48 inch)[6)]									3					
Rod ø 10 mm (0.24 inch)/PFA (300 ... 4 000 mm)														
300 mm (11.81 inch)[6)]									9		R	1	A	
500 mm (19.69 inch)[6)]									9		R	1	B	
300 ... 1 000 mm (11.81 ... 39.37 inch)[6)]									9		R	1	C	
1 001 ... 5 000 mm (39.41 ... 78.74 inch)[6)]									9		R	1	D	
2 001 ... 3 000 mm (78.78 ... 118.11 inch)[6)]									9		R	1	E	
3 001 ... 4 000 mm (118.15 ... 157.48 inch)[6)]									9		R	1	F	
Cable ø 4 mm (0.16 inch)/PFA (500 ... 32 000 mm)														
500 mm (9.69 inch)									9		R	1	G	
501 ... 1 000 mm (19.72 ... 39.37 inch)									9		R	1	H	
1 001 ... 2 000 mm (39.41 ... 78.74 inch)									9		R	1	J	
2 001 ... 4 000 mm (78.78 ... 157.40 inch)									9		R	1	K	
4 001 ... 5 000 mm (157.52 ... 196.85 inch)									9		R	1	L	
5 001 ... 10 000 mm (196.89 ... 393.70 inch)									9		R	1	M	
10 001 ... 15 000 mm (393.74 ... 590.55 inch)									9		R	1	N	
15 001 ... 20 000 mm (590.59 ... 787.40 inch)									9		R	1	P	
20 001 ... 25 000 mm (787.44 ... 984.25 inch)									9		R	1	Q	
25 001 ... 32 000 mm (984.29 ... 1 259.52 inch)									9		R	1	R	
Exchange. rod ø 8 mm (0.31 inch)/1.4435 (BN2), electropolished (Ra < 0.38 µm)														
300 ... 1 000 mm (11.81 ... 39.37 inch)[6)]									9		R	2	A	
1 001 ... 2 000 mm (39.41 ... 78.74 inch)[6)]									9		R	2	B	
2 001 ... 3 000 mm (78.78 ... 118.11 inch)[6)]									9		R	2	C	
3 001 ... 4 000 mm (118.15 ... 157.48 inch)[6)]									9		R	2	D	

© Siemens 2020

Selection and ordering data

	Order code
Further designs (mandatory)	
Please add "**-Z**" to Article No. and specify Order code(s).	
Supplementary electronics	
Without	**A00**
Additional current output 4 ... 20 mA[10]	**A01**
Indicating/adjustment module	
Without	**E00**
Mounted	**E01**
Laterally mounted	**E02**
Language of display	
German	**L00**
English	**L01**
French	**L02**
Dutch	**L03**
Italian	**L04**
Spanish	**L05**
Portuguese	**L06**
Russian	**L07**
Chinese	**L08**
Japanese	**L09**
Operating instructions	
German	**M00**
English	**M01**
French	**M02**
Spanish	**M03**
Further designs (optional)	
Please add "**-Z**" to Article No. and specify Order code(s).	
Enter the total insertion length in plain text description	**Y01**
Enter the total length of rigid part (cable version only) range from 100 ... 1 000 mm	**Y02**
Cleaning included certificate: oil, grease and silicone free	**W01**
Remote electronic cable lengths: 2 m (6.6 ft). Only available with Housing options Q2A and Q2B	**Y10**
Remote electronic cable lengths: 5 m (16.4 ft). Only available with Housing options Q2A and Q2B	**Y11**
Remote electronic cable lengths: 10 m (32.8 ft). Only available with Housing options Q2A and Q2B	**Y12**
Identification label (measurement loop) stainless steel, 40 characters max, add in plain text. To add more than one line use a coma "","," for line break.	**Y17**
Identification Label (measurement loop) foil, 40 characters max, add in plain text. To add more than one line use a coma "," for line break.	**Y18**
Material Inspection certificate 3.1 of EN 10204	**C05**
3.1-Inspection Certificate for instrument (EN 10204)[8]	**C12**
Inspection certificate 3.1 (EN 10204, NACE MR 0175) - material[8][19] Note: 316L probes include NACE MR 0175 and MR 0103, non 316L probes include MR 0175 only and plated flange designs are not available with NACE certificate.	**D07**
3.1-Inspection Certificate for instrument with test data (EN 10204)[8]	**C25**
2.2-Factory certificate for material (EN 10204)[8]	**C15**
Quality and test plan[8]	**C26**
Dye penetration test, results confirmed via a 3.1 certificate/instrument (EN10204)[8]	**C13**

	Order code
Further designs (optional)	
Please add "**-Z**" to Article No. and specify Order code(s).	
X-ray test + 3.1 certificate/instrument[8]	**C14**
Positive material identification test + 3.1 certificate/instrument[8]	**C16**
Roughness test + 3.1 certificate/instrument[8]	**C18**
Pressure test + 3.1 certificate/instrument[8]	**C31**
Helium leak test + 3.1 certificate/instrument[8]	**C32**
Ferrite measuring accuracy to DIN 32514-1 + 3.1 certificate/instrument[8]	**C60**
Pressure test according to Norsok + 3.1 certificate/instrument[8]	**C61**
5 point calibration certificate (min. length 300 mm)[8]	**C62**
Operating Instructions	
All literature is available to download for free, in a range of languages, at	
http://www.siemens.com/processinstrumentation/documentation	

Accessories	Article No.
SITRANS LG, GWR sensor Display Module	**A5E34143449**
SITRANS LG, two-wire 4 ... 20 mA/HART electronic	**A5E35637821**
SITRANS LG, USB communicator	**A5E35192015**
SITRANS LG, Mounting eye M12 x 20	**PBD:51041448**
SITRANS LG, Mounting spring	**PBD:51041449**
Siemens Intrinsically Safe Barrier (DC powered), ATEX II 1 G EEx ia	**7NG4124-0AA00**
SITRANS RD100, loop powered display - see Chapter 7	**7ML5741-.....-.**
SITRANS RD150, remote digital display for 4 ... 20 mA and HART devices - see Chapter 7	**7ML5742-.....-....**
SITRANS RD200, universal input display with Modbus conversion - see Chapter 7	**7ML5740-.....-..**
SITRANS RD300, dual line display with totalizer and linearization curve and Modbus conversion - see Chapter 7	**7ML5744-.....-..**
For applicable back up point level switch - see point level measurement section	

Note: some configuration options are not available.
For restriction information see the online PIA configuration tool.

1) Some approvals are not available with Plastic and Stainless steel (electropolished) Housing/Protection/Cable options and certain glands.
2) Available only with Rod ø 10 mm/PFA and Cable ø 4 mm/PFA Length options.
3) Available only with Supplementary electronic option A00 and Indicating/adjustment module options E00, E01.
4) Not available with Remote Housing/Protection/Cable options Q2A and Q2B.
5) Not available with Electronic option 5.
6) Not available with Y02.
7) Available only with Electronic options 0, 2, and 6.
8) Listed Certificates are not available with all configurations, please contact factory for more information.
9) Available only with Supplementary electronic option A00.
10) Not available with Indicating/adjustment module option E02.
11) Available only with Electronics options 0, 2, and 5.
12) Some approvals are not available with Remote or Stainless steel (electropolished) Housing/Protection/Cable options and certain glands.
13) Available only with Double chamber, Metallic Housing/Protection/Cable options and certain glands.
14) Available only with Electronics options 0, 2, 5, 6.
15) Available only with Electronics options 0 and 2.
16) Available only with Electronics options 0 ... 4.
17) Not available with some Seal/Process Temperature options.
18) Available only with Electronic options 0, 2, 3, and 4.
19) Available only with 316L Probes. NACE is not available with coated, plated, or hygienic connections.

Note: Please consult manual for further detail.

© Siemens 2020

Selection and ordering data

	Article No.	
SITRANS LG250 Guided radar level transmitter ↗	**7ML5881-**	Ord. code
Continuous, contact, 75 m (246 ft) range. Monitors level and interface in liquids.	■ ■ ■ ■ ■ - ■ ■ ■ ■	■ ■ ■
↗ Click on the Article No. for the online configuration in the PIA Life Cycle Portal.		
Approvals		
General purpose (CSA, FM, CE)	0 A	
Shipping approval[4)6)7)8)13)]	0 B	
Overfill protection (WHG; VLAREM)[9)10)13)]	0 C	
ATEX II 1G, ½G, 2G Ex ia IIC T6[10)13)]	0 E	
ATEX II 1G, ½G, 2G Ex ia IIC + Overfill (WHG; VLAREM)[10)13)]	0 F	
ATEX II 1G, ½G, 2G Ex ia IIC T6 + shipping approval[4)6)7)8)13)]	0 G	
ATEX II 1G, ½G 2G Ex ia IIC + ATEX II 1D, ½D,2D IP6x[1)13)]	0 H	
ATEX II ½G, 2G Ex d ia IIC T6[2)8)11)12)13)]	0 J	
ATEX II 1/2G, 2G Ex d ia IIC + ATEX II 1/2D, 2D IP6x[2)8)11)12)13)]	0 K	
ATEX II 1/2G, 2G Ex d IIC T6[1)11)14)]	0 L	
ATEX II 1/2G, 2G Ex d IIC + ATEX II 1/2D, 2D IP6x[1)11)13)14)]	0 M	
ATEX II 1D, 1/2D, 2D IP6x T[1)13)14)]	0 N	
ATEX II 1G, II 1/2G, II 2G Ex ia IIC T6...T1 Ga, Ga/Gb, Gb /IEC Ex ia IIC T6...T1 Ga, Ga/Gb, Gb[13)]	0 W	
ATEX II 1/2G, II 2G Ex db IIC T6 ... T1 Ga/Gb, Gb / IEC Ex db IIC T6 ... T1 Ga/Gb, Gb[13)14)18)]	1 K	
ATEX II 1/2G, II 2G Ex d ia IIC T6 ... T1 Ga/Gb, Gb + Ship approval[2)6)8)11)12)13)]	7 A	
ATEX II 1/2G, II 2G Ex db IIC T6 ... T1 Ga/Gb, Gb + Ship approval[1)6)8)11)13)]	7 B	
ATEX II 1/2G, II 2G Ex db IIC T6 ... T1 Ga/Gb, Gb + Overfill protection (WHG, VLAREM)[1)11)14)]	7 P	
IEC Ex ia IIC T6[10)13)]	0 P	
IEC Ex ia IIC T6 + IEC IP6x T tD[1)14)15)]	0 Q	
IEC Ex d ia IIC T6[2)8)11)12)13)]	0 R	
IEC Ex d ia IIC T6 + IEC IP6x T tD[2)8)11)12)13)15)]	0 S	
IEC Ex d IIC T6[1)11)14)]	0 T	
IEC Ex d IIC T6 + IEC IP6x T tD[1)11)14)]	0 U	
IEC Ex db IIC T6...T1 Ga/Gb, Gb + Ship approval[1)6)8)11)13)14)]	7 C	
IEC Ex ia IIC T6...T1 Ga, Ga/Gb, Gb + Ship approval[6)8)13)16)]	7 D	
IEC Ex d ia IIC T6...T1 Ga/Gb, Gb + Ship approval[2)6)8)11)13)15)]	7 E	
FM (NI) Class I, Div. 2, Groups A, B, C, D[3)8)13)17)]	1 A	
FM (IS) Class I, II, III, Div. 1, Groups A, B, C, D, E, F[5)8)13)]	1 B	
FM (XP-AIS) Class I, II, III, Div. 1, Groups A, B, C, D, E, F, G[2)8)11)12)13)]	1 C	
FM (XP) Class I, Div. 1, Groups A, B, C, D[2)11)13)14)]	1 D	
FM (NI) Class I, II, III, Div. 2, Groups A, B, C, D, F, G + Ship approval[4)6)8)13)17)]	7 F	
FM (IS) Class I, II, III, Div. 1, Groups A, B, C, D, E, F, G + Ship approval[6)8)13)16)]	7 G	
FM (XP-AIS) Class I, Div. 1, Groups A, B, C, D, + Ship approval[6)8)11)13)16)]	7 H	

	Article No.	
SITRANS LG250 Guided radar level transmitter	**7ML5881-**	Ord. code
Continuous, contact, 75 m (246 ft) range. Monitors level and interface in liquids.	■ ■ ■ ■ ■ - ■ ■ ■ ■	■ ■ ■
FM (XP) Class I, Div. 1, Groups A, B, C, D + Ship approval[2)6)8)13)14)]	7 J	
CSA (NI) Class I, Div. 2, Groups A, B, C, D (DIP) Class II, III, Div. 1, Groups E, F, G[1)]	1 E	
CSA (IS) Class I, II, III, Div. 1, Groups A, B, C, D, E, F, G[5)13)]	1 F	
CSA (XP-IS) Class I, II, III, Div. 1, Groups A, B, C, D, E, F, G[2)8)11)12)13)]	1 G	
CSA (XP) Class I, II, III, Div. 1, Groups A, B, C, D, E, F, G[8)13)14)18)]	1 H	
CSA (NI) Class I, II, III Div. 2, Groups A, B, C, D, F, G + Ship approval[1)6)13)]	7 K	
CSA (IS) Class I, II, III, Div. 1, Groups A, B, C, D, E, F, G + Ship approval[6)13)16)]	7 L	
CSA (XP-IS) Class I, II, III, Div. 1, Groups A, B, C, D, E, F, G + Ship approval[6)8)11)32)]	7 M	
CSA (XP) Class I, II, III, Div. 1, Groups A, B, C, D, E, F, G + Ship approval[6)8)13)14)18)]	7 N	
NEPSI Ex ia IIC T6[5)13)]	2 A	
NEPSI Ex ia IIC T6 + DIP A20/21 TA T*[1)13)]	2 B	
NEPSI Ex d ia IIC T6[2)8)11)13)]	2 C	
NEPSI Ex d ia IIC T6 + DIP A20/21 TA T*[2)8)11)13)]	2 D	
NEPSI Ex d IIC T6[1)11)13)14)]	2 E	
NEPSI Ex d IIC T6 + DIP A20/21TA T[1)11)13)14)]	2 F	
NEPSI DIP A20/21 TA T*[1)13)14)]	2 G	
INMETRO Ex ia IIC T6 ... T1[5)13)]	3 A	
INMETRO Ex t IIIC T* IP6X, Da, Da/Db, Da/Dc, Db + Ex ia IIC T6, Ga, Ga/Gb[1)11)13)]	3 B	
INMETRO Ex d ia IIC T6 ... T1[2)8)11)13)]	3 C	
INMETRO Ex t IIIC T* IP6X, Da, Da/Db, Da/Dc, Db + Ex d ia IIC T6 Ga/Gb[1)8)11)13)]	3 D	
INMETRO Ex d IIC T6 ... T1[1)11)13)14)]	3 E	
INMETRO Ex t IIIC T* IP6X, Da, Da/Db, Da/Dc, Db + Ex d IIC T6 Ga/Gb[1)11)13)14)]	3 F	
INMETRO Ex t IIIC T* IP6X, Da, Da/Db, Da/Dc, Db[1)11)13)14)]	3 G	
KOSHA Ex d IIC T6 ... T1 – KE[1)11)13)14)]	4 A	
Korea KC ex free area	6 A	
GOST-R/EAC 0 Ex ia IIC T1 ... T6 X[13)]	5 A	
GOST-R/EAC 0 Ex ia IIC T1 ... T6 X + Ex t IIIC T ... IP66[1)13)]	5 B	
GOST-R/EAC 1 Ex d ia IIC T1 ... T6 X[2)8)11)13)]	5 C	
GOST-R/EAC 1 Ex d ia IIC T1 ... T6 X + Ex t IIIC T ... IP66[2)8)11)13)]	5 D	
GOST-R/EAC 1 Ex d IIC T1 ... T6 X[1)11)13)]	5 E	
GOST-R/EAC 0 Ex d IIC T1 ... T6 X + Ex t IIIC T ... IP66[1)11)13)]	5 F	
GOST-R/EAC Ex t IIIC T ... IP66[1)13)]	5 G	
Note: Version/Material, Process fitting/ Material, and Length options are available only with options of corresponding type.		
Probe version/Material		
Probe exchangeable cable ø 2 mm (0.08 inch) with gravity weight/316[19)20)]	A	
Probe exchangeable cable ø 2 mm (0.08 inch) center weight/316L[19)20)]	B	

4

© Siemens 2020

Selection and ordering data

SITRANS LG250 Guided radar level transmitter	Article No. 7ML5881-	Ord. code
Continuous, contact, 75 m (246 ft) range. Monitors level and interface in liquids.	■■■■■ - ■■■■	■■■
Probe exchangeable cable ø 4 mm (0.16 inch) with gravity weight/316L[9)19)20)]	C	
Probe exchangeable cable ø 4 mm (0.16 inch) with center weight/316L[9)19)20)]	D	
Probe exchangeable rod ø 8 mm (0.31 inch)/316L[9)19)]	E	
Probe exchangeable rod ø 12 mm (0.47 inch)/316L[9)19)]	F	
Probe coax version ø 21.3 mm (0.84 inch) with single hole/316L[9)19)20)]	G	
Probe coax version ø 21.3 mm (0.84 inch) with multiple hole/316L[19)20)]	H	
Probe coax version ø 42.2 mm (1.66 inch) with multiple hole/316L[9)19)20)]	K	
Probe exchangeable cable ø 4 mm (0.16 inch) with gravity weight/Alloy C22 (2.4602)[9)]	L	
Probe exchangeable cable ø 4 mm (0.16 inch) with centre weight/Alloy C22 (2.4602)[9)]	M	
Probe exchangeable rod ø 8 mm (0.31 inch) /Alloy C22 (2.4602)[9)]	N	
Probe exchangeable rod ø 12 mm (0.47 inch)/ Alloy C22 (2.4602)[9)]	P	
Probe coax version ø 21.3 mm (0.84 inch) with multiple hole/Alloy C22 (2.4602)[9)]	Q	
Probe coax version ø 42.2 mm (1.66 inch) with multiple hole/Alloy C22 (2.4602)[9)]	R	
Probe exchangeable rod ø 8 mm (0.31 inch)/ Duplex (1.4462)[9)]	S	
Exchangeable rod ø 12 mm (0.47 inch)/ Alloy C22 and 400 (2.4360)[9)]	T	
Exchangeable coated cable ø 4 mm with uncoated centering weight/PFA and 316[21)24)30)35)36)]	U	
Process fitting/Material		
Thread G 3/4" (DIN 3852-A) PN 6/316L	0 0	
Thread 3/4" NPT (ASME B1.20.1) PN 6/316L	0 1	
Thread G 3/4" (DIN 3852-A) PN 40/316L	0 2	
Thread 3/4" NPT (ASME B1.20.1) PN 40/316L	0 3	
Thread G 3/4" (DIN 3852-A) PN 100 / 316L[22)]	0 4	
Thread 3/4" NPT (ASME B1.20.1) PN 100/316L[22)]	0 5	
Thread G 1" (DIN 3852-A) PN 40/316L	0 6	
Thread 1" NPT (ASME B1.20.1) PN 40/316L	0 7	
Thread G 1" (DIN 3852-A) PN 100/316L[22)]	0 8	
Thread 1" NPT (ASME B1.20.1) PN 100/316L[22)]	1 0	
Thread G 1 1/2" (DIN 3852-A) PN 40/316L	1 1	
Thread 1 1/2" NPT (ASME B1.20.1) PN 40/316L	1 2	
Thread G1 1/2" (DIN 3852-A) PN 100/316L[22)]	1 3	
Thread 1 1/2" NPT (ASME B1.20.1) PN 100/316L[22)]	1 4	
Thread 2 NPT PN 40, ASME B1.20.1/316L[23)24)]	1 5	
Flange DN 25 PN 40 Form C, DIN 2501/316L	2 0	
Flange DN 25 PN 40 Form F, DIN 2501/316L	2 1	
Flange DN 40 PN 40 Form C, DIN 2501/316L	2 2	
Flange DN 50 PN 40 Form C, DIN 2501/316L	2 3	
Flange DN 50 PN 40 Form V13, DIN 2513/316L	2 4	
Flange DN 80 PN 40 Form C, DIN 2501/316L	2 5	

SITRANS LG250 Guided radar level transmitter	Article No. 7ML5881-	Ord. code
Continuous, contact, 75 m (246 ft) range. Monitors level and interface in liquids.	■■■■■ - ■■■■	■■■
Flange DN 80 PN 40 Form V13, DIN 2501/316L	2 6	
Flange DN 100 PN 16 Form C, DIN 2501/316L	2 7	
Flange DN 100 PN 16 Form V13, DIN 2501/316L	2 8	
Flange DN 100 PN 40 Form C, DIN 2501 /316L	3 0	
Flange DN 100 PN 40 Form V13, DIN 2513/316L	3 1	
Flange DN 150 PN 16 Form C, DIN 2501/316L	3 2	
Flange DN 50 PN 40 EN 1092-1 Form B1/316L	3 3	
Flange DN 80 PN 40 EN 1092-1 Form B1/316L	3 4	
Flange 1" 150 lb RF, ASME B16.5/316L	3 5	
Flange 1 1/2" 150 lb RF, ASME B16.5/316L	3 6	
Flange 2" 150 lb RF, ASME B16.5/316L	3 7	
Flange 2" 300 lb RF, ASME B16.5/316L	3 8	
Flange 3" 150 lb RF, ASME B16.5/316L	4 0	
Flange 3" 300 lb RF, ASME B16.5/316L	4 1	
Flange 4" 150 lb RF, ASME B16.5/316L	4 2	
Flange 4" 300 lb RF, ASME B16.5/316L	4 3	
Flange 6" 150 lb RF, ASME B16.5/316L	4 4	
Flange 6" 300 lb RF, ASME B16.5/316L	4 5	
Thread G 3/4" PN 40, DIN3852-A/ Alloy C22 (2.4602)[37)]	4 6	
Thread G 1" PN 40, DIN 3852-A/ Alloy C22 (2.4602)[37)]	4 7	
Thread G 1 1/2" PN 40, DIN 3852-A/ Alloy C22 (2.4602)	4 8	
Thread 1 1/2" NPT PN 40, ASME B1.20.1/Alloy C22 (2.4602)	5 0	
Flange DN 50 PN 40 Form C, DIN 2501/ 316L with Alloy C22 (2.4602) coating	5 1	
Flange DN 50 PN 40 Form B1, EN 1092-1/ 316L with Alloy C22 (2.4602) coating	5 2	
Flange DN 80 PN 40 Form B1, EN 1092-1/ 316L with Alloy C22 (2.4602) coating	5 3	
Flange DN 100 PN 40 Form B1, EN 1092-1/ 316L with Alloy C22 (2.4602) coating	5 4	
Flange DN 150 PN 16 Form B1, EN 1092-1/ 316L with Alloy C22 (2.4602) coating	5 5	
Flange DN 200 PN 16 Form B1, EN 1092-1/ 316L with Alloy C22 (2.4602) coating	5 6	
Flange 2" 150 lb RF, ASME B16.5/316L with Alloy C22 (2.4602) coating	5 7	
Flange 2" 300 lb RF, ASME B16.5/316L with Alloy C22 (2.4602) coating	5 8	
Flange 3" 150 lb RF, ASME B16.5/316L with Alloy C22 (2.4602) coating	6 0	
Flange 4" 150 lb RF, ASME B16.5/316L with Alloy C22 (2.4602) coating	6 1	
Flange 4" 300 lb RF, ASME B16.5/316L with Alloy C22 (2.4602) coating	6 2	
Flange 6" 150 lb RF, ASME B16.5/316L with Alloy C22 (2.4602) coating	6 3	
Flange 6" 300 lb RF, ASME B16.5/316L with Alloy C22 (2.4602) coating	6 4	
Thread G 3/4" (DIN 3852-A) PN 40/Duplex 1.4462	6 5	

© Siemens 2020

Selection and ordering data

SITRANS LG250 Guided radar level transmitter Continuous, contact, 75 m (246 ft) range. Monitors level and interface in liquids.	**Article No.** 7ML5881-	Ord. code
Flange DN 80 PN 40 Form F, DIN 2501/Duplex (1.4462)	6 6	
Flange DN 50 PN 40 Form B1, EN 1092-1/ Duplex (1.4462)	6 7	
Flange 1" 150 lb RF, ASME16.5/Duplex (1.4462)	6 8	
Flange 1 1/2" 150 lb RF, ASME B16.5/Duplex (1.4462)	7 0	
Flange 2" 150 lb RF, ASME B16.5/Duplex (1.4462)	7 1	
Flange 2" 300 lb RF, ASME B16.5/Duplex (1.4462)	7 2	
Flange 2" 600 lb RF, ASME B16.5/Duplex (1.4462)	7 3	
Flange 3" 150 lb RF, ASME B16.5/Duplex (1.4462)	7 4	
Flange 3" 300 lb RF, ASME B16.5/Duplex (1.4462)	7 5	
Flange 4" 150 lb RF, ASME B16.5/Duplex (1.4462)	7 6	
Flange 4" 150 lb FF, ASME B16.5/Duplex (1.4462)	7 7	
Flange 4" 300 lb RF, ASME B16.5/Duplex (1.4462)	7 8	
Flange 4" 600 lb RF, ASME B16.5/Duplex (1.4462)	8 0	
Thread 1 1/2" NPT PN 40, ASME B1.20.1/Alloy 400 (2.4360)	8 1	
Flange 2" 150 lb RF, ASME B16.5/Alloy 400 (2.4360)	8 2	
Flange 2" 300 lb RF, ASME B16.5/Alloy 400 (2.4360) solid	8 3	
Flange 3" 150 lb RF, ASME B16.5/Alloy 400 (2.4360)	8 4	
Flange 3" 300 lb RF, ASME B16.5/Alloy 400 (2.4360)	8 5	
Flange 3" 300 lb RJF, ASME B16.5/Alloy 400 (2.4360)	8 6	
Flange 4" 150 lb RF, ASME B16.5/Alloy 400 (2.4360)	8 7	
Flange 4" 300 lb RF, ASME B16.5/Alloy 400 (2.4360)	8 8	
Flange DN 25 PN 40 Form C, DIN 2501/ Alloy C22 (2.4602) solid[37]	9 0	L 1 A
Flange DN 25 PN 40 Form B1, EN 1092-1/ Alloy C22 (2.4602) solid[37]	9 0	L 1 B
Flange DN 80 PN 40 Form B1, EN 1092-1/ Alloy C22 (2.4602) solid	9 0	L 1 C
Flange 1" 150 lb RF, ASME B16.5/Alloy C22 (2.4602) solid[37]	9 0	L 1 D
Flange 1 1/2" 150 lb RF, ASME B16.5/ Alloy C22 (2.4602) solid[37]	9 0	L 1 E
Flange 1 1/2" 300 lb RF, ASME B16.5/ Alloy C22 (2.4602) solid[37]	9 0	L 1 F
Flange 2" 150 lb RF, ASME B16.5/ Alloy C22 (2.4602) solid	9 0	L 1 G
Flange 2" 300 lb RF, ASME B16.5/ Alloy C22 (2.4602) solid	9 0	L 1 H
Flange 2" 600 lb RF, ASME B16.5/ Alloy C22 (2.4602) solid	9 0	L 1 J
Flange 2" 1 500 lb RJF, ASME B16.5/ Alloy C22 (2.4602) solid	9 0	L 1 K
Flange 3" 150 lb RF, ASME B16.5/ Alloy C22 (2.4602) solid	9 0	L 1 L
Flange 3" 300 lb RF, ASME B16.5/ Alloy C22 (2.4602) solid	9 0	L 1 M
Flange 3" 300 lb RF, ASME B16.5/316L with Alloy C22 (2.4602) coating	9 0	L 1 N

SITRANS LG250 Guided radar level transmitter Continuous, contact, 75 m (246 ft) range. Monitors level and interface in liquids.	**Article No.** 7ML5881-	Ord. code
Flange 4" 150 lb RF, ASME B16.5/ Alloy C22 (2.4602) solid	9 0	L 1 P
Flange 4" 150 lb FF, ASME B16.5/ Alloy C22 (2.4602) solid	9 0	L 1 Q
Flange 4" 300 lb RF, ASME B16.5/ Alloy C22 (2.4602) solid	9 0	L 1 R
Flange 4" 300 lb RJF, ASME B16.5/ Alloy C22 (2.4602) solid	9 0	L 1 S
Flange 4" 300 lb LT, ASME B16.5/ Alloy C22 (2.4602) solid	9 0	L 1 T
Flange 4" 600 lb RJF, ASME B16.5/ Alloy C22 (2.4602) solid	9 0	L 1 U
Flange 6" 150 lb RF, ASME B16.5/ Alloy C22 (2.4602) solid	9 0	L 1 V
Flange 2 1/2" 600 lb RF, Masoneilan/ Alloy C22 (2.4602) solid	9 0	L 1 W
Flange 2" 600 lb RF, ASME B16.5/316/316 L[24]	9 0	L 1 X
Flange 3" 600 lb RF, ASME B16.5/316/316L[24][25]	9 0	L 1 Y
Flange 4" 600 lb RF, ASME B16.5/316/316L[31]	9 0	L 2 A
Thread R1½ PN40, EN 10226-1/316L[38]		L 2 B
Electronics		
Two-wire 4 ... 20 mA/HART	0	
Four-wire Modbus[2][8][11]	1	
Two-wire 4 ... 20 mA/HART with SIL qualification[9][10]	2	
Four-wire 4 ... 20 mA/HART; 90 ... 253 V AC; 50/60Hz[2][8][11][34]	3	
Four-wire 4 ... 20 mA/HART; 9.6 ... 48 V DC; 20 ... 42 V AC[2][8][11][34]	4	
PROFIBUS PA[5][8]	5	
FOUNDATION Fieldbus[5][8]	6	
Seal/Second line of defense/ Process temperature		
FKM (SHS FPM 70C3 GLT)/without glass seal/-40 ... +80 °C (-40 ... +176 °F)	A	
FKM (SHS FPM 70C3 GLT)/without glass seal/ -40 ... +150 °C (-40 ... +302 °F)	B	
FKM (SHS FPM 70C3 GLT)/with glass seal/ -40 ... +150 °C (-40 … +302 °F)[26]	C	
FFKM (Kalrez 6375)/without/-20 ... 150 °C (-4 ... +302 °F)	D	
FFKM (Kalrez 6375)/with/-20 ... +150 °C (-4 ... +302 °F)[5]	E	
FFKM (Kalrez 6375)/with glass seal/ -20 ... +200 °C (-4 ... +392 °F)[26]	F	
EPDM (A+P 75.5/KW75F)/without glass seal/ -40 ... +80 °C (-40 ... +176 °F)	G	
EPDM (A+P 75.5/KW75F)/without glass seal/ -40 ... +150 °C (-40 ... +302 °F)[26]	H	
EPDM (A+P 75.5/KW75F)/with glass seal/-40 ... +150 °C (-40 ... +302 °F)[26]	J	
Silicone FEP coated (A+P FEP-O-SEAL)/ without glass seal/-40 ... +80 °C (-40 ... +176 °F)	K	
Silicone FEP coated (A+P FEP-O-SEAL)/ without glass seal/-40 ... +150 °C (-40 ... +302 °F)	L	
Silicone FEP coated (A+P FEP-O-SEAL)/ with glass seal/-40 ... +150 °C (-40 ... +302 °F)[26]	M	
With borosilicate glass lead through for volatile substances, e.g. ammonia/with glass seal/-60 ... +150 °C (-76 ... +302 °F)[26]	N	
FFKM (Kalrez 6375)/without glass seal/-20 … +200 °C (-4 ... +392 °F)	P	
FKM (SHS FPM 70C3 GLT)/with glass seal/-40 ... 80 °C (-40 ... +176 °F)[26]	Q	

© Siemens 2020

Selection and ordering data

SITRANS LG250 Guided radar level transmitter	Article No. 7ML5881-	Ord. code
Continuous, contact, 75 m (246 ft) range. Monitors level and interface in liquids.	■■■■■-■■■■	■■■
Housing/Protection/Cable		
Note: for installation of remote display, 7ML5840, with LG two chamber housing options, contact PVC		
Plastic IP66/IP67 M20 x 1.5/blind stopper[11)15)]	A	
Plastic IP66/IP67 1/2" NPT/blind stopper[8)11)]	B	
Plastic 2-chamber/IP66/IP67/M20 x 1.5/ blind stopper	G	
Plastic 2-chamber/IP66/IP67 /1/2" NPT/ blind stopper	H	
Aluminum/IP66/IP68 (0.2 bar) M20 x 1.5/ Blind stopper[8)11)]	C	
Aluminum/IP66/IP68 (0.2 bar) 1/2" NPT/ Blind stopper[8)11)]	D	
Aluminum double chamber/IP66/IP68 (0.2 bar) M20 x 1.5 / Blind stopper	E	
Aluminum double chamber/IP66/IP68 (0.2 bar) 1/2" NPT/Blind stopper	F	
Stainless Steel (precision casting) 316L/ IP66/IP68 (0.2 bar) M20 x 1.5/ Blind stopper[9)11)]	L	
Stainless Steel (precision casting) 316L/ IP66/IP68 (0.2 bar) 1/2" NPT/ Blind stopper[8)11)]	M	
Stainless Steel (electropolished) 316L/IP66/IP68 (0.2 bar) M20 x 1.5/ Blind stopper[8)11)]	N	
Stainless Steel (electropolished) 316L/IP66/IP68 (0.2 bar) 1/2" NPT/ Blind stopper[8)11)]	P	
Stainless Steel double chamber/IP66/IP68 (0.2 bar) M20 x 1.5/Blind stopper	Q	
Stainless Steel double chamber/IP66/IP68 (0.2 bar) 1/2" NPT/Blind stopper	R	
Aluminum/IP66/IP68 (0.2 bar) M20 x 1.5/ Cable gland stainless steel[8)11)]	S	
Aluminum double chamber/IP66/IP68 (0.2 bar) M20 x 1.5/Cable gland stainless steel	T	
Stainless Steel (precision casting) 316L/ IP66/IP68 (0.2 bar) M20 x 1.5/Cable gland stainless steel[11)28)]	U	
Stainless Steel (electropolished) 316L/IP66/IP68 (0.2 bar) M20 x 1.5/Cable gland stainless steel[11)28)]	V	
Stainless steel single chamber (precision casting)/IP66/IP68 (0.2 bar) M20 x 1.5/ Cable gland brass nickel-plated	W	
Aluminum single chamber/IP66/IP68 (0.2 bar) M20 x 1.5/Cable gland brass nickel-plated	X	
Stainless steel single chamber (precision casting)/IP66/ IP68 (0.2 bar) M20 x 1.5/ Cable gland brass nickel-plated	Y	
Stainless steel double chamber / IP66/ IP68 (0.2 bar) M20 x 1.5 / Cable gland brass nickel-plated	J	
Aluminum single chamber/IP66/IP68 (0.2 bar) with M20 x 1.5/Plug connector Harting HAN 7D (straight)	Z	Q 1 A
Aluminum single chamber/IP66/IP68 (0.2 bar) with M20 x 1.5/Special HARTING plug (bent) according to Tier One (ZB7555)	Z	Q 1 B
Remote stainless steel single chamber housing, electropolished/IP66/IP67 with cable outlet IP68 (electronics separated by cable); M20 x 1.5/blind plug[11)27)]	Z	Q 2 A
Remote plastic single chamber housing /IP66/IP67 with cable outlet IP68 (electronics separated by cable); M20 x 1.5/blind plug[11)27)]	Z	Q 2 B

SITRANS LG250 Guided radar level transmitter	Article No. 7ML5881-	Ord. code
Continuous, contact, 75 m (246 ft) range. Monitors level and interface in liquids.	■■■■■-■■■■	■■■
Lengths		
Rod ø 8 mm/316L		
300 ... 1 000 mm (11.81 ... 39.37 inch)[29)]	0	
1 001 ... 2 000 mm (39.41 ... 78.74 inch)[29)]	1	
2 001 ... 3 000 mm (78.78 ... 118.11 inch)[29)]	2	
3 001 ... 4 000 mm (118.15 ... 157.48 inch)[29)]	3	
4 001 ... 5 000 mm (157.52 ... 196.85 inch)[29)]	4	
5 001 ... 6 000 mm (196.89 ... 236.22 inch)[29)]	5	
Rod ø 8 mm/Duplex		
300 ... 1 000 mm (11.81 ... 39.37 inch)[29)]	9	R 1 A
1 001 ... 2 000 mm (39.41 ... 78.74 inch)[29)]	9	R 1 B
2 001 ... 3 000 mm (78.78 ... 118.11 inch)[29)]	9	R 1 C
3 001 ... 4 000 mm (118.15 ... 157.48 inch)[29)]	9	R 1 D
4 001 ... 5 000 mm (157.52 ... 196.85 inch)[29)]	9	R 1 E
5 001 ... 6 000 mm (196.89 ... 236.22 inch)[29)]	9	R 1 F
Rod ø 8 mm or ø 12 mm /Alloy C22 and 400		
300 ... 1 000 mm (11.81 ... 39.37 inch)[29)]	9	R 1 J
1 001 ... 2 000 mm (39.41 ... 78.74 inch)[29)]	9	R 1 K
2 001 ... 3 000 mm (78.78 ... 118.11 inch)[29)]	9	R 1 L
3 001 ... 4 000 mm (118.15 ... 157.48 inch)[29)]	9	R 1 M
4 001 ... 5 000 mm (157.52 ... 196.85 inch)[29)]	9	R 1 N
5 001 ... 6 000 mm (196.89 ... 236.22 inch)[29)]	9	R 1 P
Rod ø 12 mm/316L		
300 ... 1 000 mm (11.81 ... 39.37 inch)[29)]	9	R 2 A
1 001 ... 2 000 mm (39.41 ... 78.74)[29)]	9	R 2 B
2 001 ... 3 000 mm (78.78 ... 118.11 inch)[29)]	9	R 2 C
3 001 ... 4 000 mm (118.15 ... 157.48 inch)[29)]	9	R 2 D
Cable lengths ø 2 or 4 mm/316L		
501 ... 1 000 mm (19.72 ... 39.37 inch)	9	R 2 E
1 000 ... 5 000 mm (39.37 ... 196.85 inch)	9	R 2 F
5 001 ... 10 000 mm (196.89 ... 393.70 inch)	9	R 2 G
10 001 ... 15 000 mm (393.74 ... 590.55 inch)	9	R 2 H
15 001 ... 20 000 mm (590.59 ... 787.40 inch)	9	R 2 J
20 001 ... 25 000 mm (787.44 ... 984.25 inch)	9	R 2 K
25 001 ... 30 000 mm (984.29 ... 1 181.10 inch)	9	R 2 L
30 001 ... 35 000 mm (1 181.14 ... 1 377.95 inch)	9	R 2 M
35 001 ... 40 000 mm (1 377.99 ... 1 574.80 inch)	9	R 2 N
40 001 ... 45 000 mm (1 574.84 ... 1 771.65 inch)	9	R 2 P
45 001 ... 50 000 mm (1 771.69 ... 1 968.50 inch)	9	R 2 Q
50 001 ... 55 000 mm (1 968.54 ... 2 165.35 inch)	9	R 2 R
55 001 ... 60 000 mm (2 165.39 ... 2 362.20 inch)	9	R 2 S
60 001 ... 65 000 mm (2 362.24 ... 2 559.06 inch)	9	R 2 T
65 001 ... 70 000 mm (2 559.09 ... 2 755.91 inch)	9	R 2 U
70 001 ... 75 000 mm (2 755.94 ... 2 952.76 inch)	9	R 2 V

© Siemens 2020

Selection and ordering data

	Article No.												Order code
SITRANS LG250 Guided radar level transmitter	**7ML5881-**											Ord. code	
Continuous, contact, 75 m (246 ft) range. Monitors level and interface in liquids.	■	■	■	■	■	-	■	■	■		■	■	
Cable Lengths ø 2 mm or ø 4 mm/Alloy C22													
501 ... 1 000 mm (19.72 ... 39.37 inch)									9	R	4	A	
1 001 ... 5 000 mm (39.41 ... 196.85 inch)									9	R	4	B	
5 001 ... 10 000 mm (196.89 ... 393.70 inch)									9	R	4	C	
10 001 ... 15 000 mm (393.74 ... 590.55 inch)									9	R	4	D	
15 001 ... 20 000 mm (590.59 ... 787.40 inch)									9	R	4	E	
20 001 ... 25 000 mm (787.44 ... 984.25 inch)									9	R	4	F	
25 001 ... 30 000 mm (984.29 ... 1 181.10 inch)									9	R	4	G	
30 001 ... 35 000 mm (1 181.14 ... 1 377.95 inch)									9	R	4	H	
35 001 ... 40 000 mm (1 377.99 ... 1 574.80 inch)									9	R	4	J	
40 001 ... 45 000 mm (1 574.84 ... 1 771.65 inch)									9	R	4	K	
45 001 ... 50 000 mm (1 771.69 ... 1 968.50 inch)									9	R	4	L	
50 001 ... 55 000 mm (1 968.54 ... 2 165.35 inch)									9	R	4	M	
55 001 ... 60 000 mm (2 165.39 ... 2 362.20 inch)									9	R	4	N	
60 001 ... 65 000 mm (2 362.24 ... 2 559.06 inch)									9	R	4	P	
65 001 ... 70 000 mm (2 559.09 ... 2 755.91 inch)									9	R	4	Q	
70 001 ... 75 000 mm (2 755.94 ... 2 952.76 inch)									9	R	4	R	
Coax ø 21.3 mm/316L													
300 ... 1 000 mm (11.81 ... 39.37 inch)[29]									9	R	3	A	
1 001 ... 2 000 mm (39.41 ... 78.74 inch)[29]									9	R	3	B	
2 001 ... 3 000 mm (78.78 ... 118.11 inch)[29]									9	R	3	C	
3 001 ... 4 000 mm (118.15 ... 157.48 inch)[29]									9	R	3	D	
4 001 ... 5 000 mm (157.52 ... 196.85 inch)[29]									9	R	3	E	
5 001 … 6 000 mm (196.89 … 236.22 inch)[29]									9	R	3	F	
Coax ø 21.3 mm/Alloy C22													
300 ... 1 000 mm (11.81 ... 39.37 inch)[29]									9	R	5	A	
1 001 ... 2 000 mm (39.41 ... 78.74 inch)[29]									9	R	5	B	
2 001 ... 3 000 mm (78.78 ... 118.11 inch)[29]									9	R	5	C	
3 001 ... 4 000 mm (118.15 ... 157.48 inch)[29]									9	R	5	D	
4 001 ... 5 000 mm (157.52 ... 196.85 inch)[29]									9	R	5	E	
5 001 ... 6 000 mm (196.89 ... 236.22 inch)[29]									9	R	5	F	
Coax ø 42.2 mm/316L													
300 ... 1 000 mm (11.81 ... 39.37 inch)[29]									9	R	3	G	
1 001 ... 2 000 mm (39.41 ... 78.74 inch)[29]									9	R	3	H	
2 001 ... 3 000 mm (78.78 ... 118.11 inch)[29]									9	R	3	J	
3 001 ... 4 000 mm (118.15 ... 157.48 inch)[29]									9	R	3	K	
4 001 ... 5 000 mm (157.52 … 196.85 inch)[29]									9	R	3	L	
5 001 … 6 000 mm (196.89 … 236.22 inch)[29]									9	R	3	M	
Coax ø 42.2 mm/Alloy C22													
300 ... 1 000 mm (11.81 ... 39.37 inch)[29]									9	R	5	G	
1 001 ... 2 000 mm (39.41 ... 78.74 inch)[29]									9	R	5	H	
2 001 ... 3 000 mm (78.78 ... 118.11 inch)[29]									9	R	5	J	
3 001 ... 4 000 mm (118.15 ... 157.48 inch)[29]									9	R	5	K	
4 001 ... 5 000 mm (157.52 ... 196.85 inch)[29]									9	R	5	L	
5 001 ... 6 000 mm (196.89 ... 236.22 inch)[29]									9	R	5	M	
Cable lengths ø 4 mm PFA													
300 ... 1 000 mm (12 ... 39.37 inch)									9	R	6	A	
1 001 ... 2 000 mm (39.41 ... 78.74 inch)									9	R	6	B	
2 001 ... 5 000 mm (78.77 ... 196.85 inch)									9	R	6	C	
5 001 ... 10 000 mm (196.89 ... 393.70 inch)									9	R	6	D	
10 001 ... 15 000 mm (393.74 ... 590.55 inch)									9	R	6	E	
15 001 ... 20 000 mm (590.59 ... 787.40 inch)									9	R	6	F	
20 001 ... 25 000 mm (787.44 ... 984.25 inch)									9	R	6	G	
25 001 ... 32 000 mm (984.29 ... 1 259.84 inch)									9	R	6	H	

	Order code
Further designs (mandatory)	
Please add "**-Z**" to Article No. and specify Order code(s).	
Supplementary electronics	
Without	**A00**
Additional current output 4 ... 20 mA[11]	**A01**
Dimensions centering weight (diameter/height)	
Without	**B00**
ø 40/30 mm	**B01**
ø 45/30 mm (for 2 inch tubes)	**B02**
ø 75/30 mm (for 3 inch tubes)	**B03**
ø 95/30 mm (for 4 inch tubes)	**B04**
ø 40 mm/30 mm ø 1.57/1.18 inch (for 2 inch Schedule 160)	**B05**
ø 45 mm/30 mm (for 2 inch tubes) ø 1.77/1.18 inch (for 2 inch Schedule 40/80)	**B06**
ø 75 mm/30 mm (for 3 inch tubes) ø 2.95/1.18 inch (for 3 inch Schedule 10/40)	**B07**
ø 95 mm/30 mm (for 4 inch tubes) ø 3.74/1.18 inch (for 4 inch Schedule 80)	**B08**
Rod mounted	
Without Rod, applicable for coax or cable probe types only	**C00**
Mounted	**C01**
Not mounted	**C02**
Indicating/adjustment module	
Without	**E00**
Mounted	**E01**
Laterally mounted	**E02**
Language of display	
German	**L00**
English	**L01**
French	**L02**
Dutch	**L03**
Italian	**L04**
Spanish	**L05**
Portuguese	**L06**
Russian	**L07**
Chinese	**L08**
Japanese	**L09**
Operating instructions	
German	**M00**
English	**M01**
French	**M02**
Spanish	**M03**
Further designs (optional)	
Please add "**-Z**" to Article No. and specify Order code(s).	
Enter the total insertion length in plain text description	**Y01**
Enter the total length of rigid part (cable version only) range from 100 ... 1 000 mm	**Y02**
Remote electronic cable lengths: 2 m (6.6 ft). Only available with Housing options Q2A and Q2B	**Y10**
Remote electronic cable lengths: 5 m (16.4 ft). Only available with Housing options Q2A and Q2B	**Y11**

© Siemens 2020

Selection and ordering data	Order code
Remote electronic cable lengths: 10 m (32.8 ft). Only available with Housing options Q2A and Q2B	**Y12**
Identification Label (measurement loop) stainless steel, 40 characters max, add in plain text. To add more than one line use a coma "," for line break.	**Y17**
Identification Label (measurement loop) foil, 40 characters max, add in plain text. To add more than one line use a coma "," for line break.	**Y18**
Material Inspection certificate 3.1 of EN 10204	**C05**
3.1-Inspection Certificate for instrument (EN 10204)[30]	**C12**
Inspection certificate 3.1 (EN 10204, NACE MR 0175) - material[30][31] Note: 316L probes include NACE MR 0175 and MR 0103, non 316L probes include MR 0175 only and plated flange designs are not available with NACE certificate.	**D07**
3.1-Inspection Certificate for instrument with test data (EN 10204)[30]	**C25**
2.2-Factory certificate for material (EN 10204)[30]	**C15**
Quality and test plan[30]	**C26**
Dye penetration test, results confirmed via a 3.1 certificate/instrument (EN10204)[30]	**C13**
X-ray test + 3.1 certificate/instrument[30]	**C14**
Positive material identification test + 3.1 certificate/instrument[30]	**C16**
Roughness test + 3.1 certificate/instrument[30]	**C18**
Pressure test + 3.1 certificate/instrument[30]	**C31**
Helium leak test + 3.1 certificate/instrument[30]	**C32**
Pressure test according to Norsok + 3.1 certificate/instrument[30]	**C61**
5 point calibration certificate (min. length 500 mm)[30]	**C62**
Pressure test (acc. to ASME B31.1), incl. 3.1 Inspection certificate[30]	**C63**
Certificate suitable for tropical regions with, all attachment parts of metal (2.1 factory certificate)	**C65**
Operating Instructions	
All literature is available to download for free, in a range of languages, at	

http://www.siemens.com/processinstrumentation/documentation

Accessories	Article No.
SITRANS LG, GWR sensor Display Module	**A5E34143449**
SITRANS LG, two-wire 4 ... 20 mA/HART electronic	**A5E35637821**
SITRANS LG, USB communicator	**A5E35192015**
SITRANS LG, Mounting eye M8 x 20	**A5E36653574**
SITRANS LG, Mounting eye M12 x 20	**PBD:51041448**
SITRANS LG, Mounting spring	**PBD:51041449**
Siemens Intrinsically Safe Barrier (DC powered), ATEX II 1 G EEx ia	**7NG4124-0AA00**
SITRANS RD100, loop powered display - see Chapter 7	**7ML5741-.....-.**
SITRANS RD150, remote digital display for 4 ... 20 mA and HART devices - see Chapter 7	**7ML5742-.....-....**
SITRANS RD200, universal input display with Modbus conversion - see Chapter 7	**7ML5740-.....-..**
SITRANS RD300, dual line display with totalizer and linearization curve and Modbus conversion - see Chapter 7	**7ML5744-.....-..**
For applicable back up point level switch - see point level measurement section	

Note: some configuration options are not available.
For restriction information see the online PIA configuration tool.

1) Not available with Plastic and Stainless steel (electropolished) Housing/Protection/Cable options and certain glands.
2) Available only with Metallic, Double chamber Housing/Protection/Cable options and certain glands.
3) Not available with Remote or Stainless steel (electropolished) Housing/Protection/Cable options and certain glands.
4) Not available with Stainless steel (electropolished) Housing/Protection/Cable options and certain glands.
5) Not available with certain glands.
6) Not available with Version/Material option K, L, M, N, P, Q, R, S, T, and U.
7) Not available with Length options 3, 4, 5, R2C, and R2D.
8) Available only with Supplementary electronic option A00.
9) Not available with Seal/Second line of defense/Process temperature option N.
10) Not available with Housing/Protection/Cable option Q1B.
11) Not available with Indicating/adjustment module option E02.
12) Not available with Process fitting/Material options 00 and 01.
13) Available only with Electronic options 0 ... 4.
14) Available only with glass seal options.
15) Available only with Seal/Second line of defense/Process temperature options C, D, E, F, H, J, M, N, Q.
16) Not Available with Housing/Protection/Cable options W, X, Y, J, Q1A, and Q1B.
17) Not Available with Seal/Second line of defense/Process temperature option P.
18) Available only with Single chamber, Aluminum and Stainless steel (precision casting) Housing/Protection/Cable options.
19) Available only with Dimensions centering weight option B00.
20) Available only with Rod mounted option C00.
21) Not available with Dimensions centering weight option B00.
22) Available only with Seal/Second line of defense/Process temperature option N.
23) Not available with Version/Material options F, K, L, M, N, P, Q, R, S, and T.
24) Not available with Seal/Process temperature options A, G, K, N, and Q.
25) Available only with Version/Material options A ... K.
26) Not available with Remote Housing/Protection/Cable options.
27) Not available with some Seal/Process temperature options including glass.
28) Not available with Supplementary electronics options.
29) Not available with Y02.
30) Listed Certificates are not available with all configurations, please contact factory for more information.
31) Available only with 316L Probes. NACE is not available with coated, plated, or hygienic connections.
32) Available only with Housing/Protection/Cable options E, F, N, Q, R, T.
33) Available only with Housing/Protection/Cable options C, D, E, F, L, M, N, P, Q, R, S, T, U, V, Q2A, and Q2B.
34) Available only with Double chamber, Plastic and Metallic Housing/Protection/Cable options and certain glands.
35) Available only with Approvals options OA (CE only) and 1D.
36) Available only with ø 4 mm PFA Length options.
37) Not available with Probe version/Material option P.
38) Available only with Probe version/Material options G and H.

Note: Please consult manual for further details.

© Siemens 2020

Selection and ordering data

	Article No.	
SITRANS LG260 Guided radar level transmitter ↗	**7ML5882-**	Ord. code
Continuous, contact, 60 m (197 ft) range. Monitors level in solids.	■■■■■-■■■■	■■■
↗ Click on the Article No. for the online configuration in the PIA Life Cycle Portal.		
Approvals		
General purpose (CSA, FM, CE)[6]	0 A	
Shipping approval[4)5)7)8)9)]	0 B	
Overfill protection (WHG; VLAREM)[5)8)]	0 C	
ATEX II 1G, 1/2G, 2G Ex ia IIC T6[5)8)]	0 E	
ATEX II 1G, 1/2G, 2G Ex ia IIC + Overfill (WHG; VLAREM)[5)8)]	0 F	
ATEX II 1G, 1/2G, 2G Ex ia IIC T6 + shipping approval[4)5)7)8)9)10)]	0 G	
ATEX II 1G,1/2G,2G Ex ia IIC + II 1D,1/2D,1/3D, 2D IP66[1)5)8)]	0 H	
ATEX II 1/2G, 2G Ex d ia IIC T6[2)5)8)9)10)]	0 J	
ATEX II 1/2G, 2G Ex d ia IIC + shipping approval[2)5)7)8)9)10)]	0 L	
ATEX II 1/2G, II 2G Ex db ia IIC T6 ... T1 Ga/Gb, Gb + II 1D, 1/2D, 1/3D, 2D Ext IIIC T* Da, Da/Db, Da/Dc, Db[2)5)8)9)10)]	0 M	
ATEX II 1/2G, 2G Ex d IIC T6[1)8)10)11)]	0 N	
ATEX II 1G, II 1/2G, II 2G Ex ia IIC T6...T1 Ga, Ga/Gb, Gb /IEC Ex ia IIC T6...T1 Ga, Ga/Gb, Gb[8)]	0 W	
ATEX II 1/2G, 2G Ex d IIC + shipping approval[1)7)8)9)10)11)]	0 Q	
ATEX II 1/2G,2G Ex d IIC + II 1D, 1/2D, 1/3D, 2D IP66[1)8)10)11)]	0 R	
ATEX II 1D, 1/2D, 2D IP6x T [1)8)11)]	0 S	
IEC Ex ia IIC T6[5)8)]	0 T	
IEC Ex ia IIC T6...T1 Ga, Ga/Gb, Gb + Ex t IIIC T[1)8)11)]	0 U	
IEC Ex d ia IIC T6[2)5)8)9)10)]	1 A	
IEC Ex d ia IIC T6 + IEC IP6x T tD[2)5)8)9)10)]	1 B	
IEC Ex db IIC T6 ... T1 Ga/Gb, Gb[1)8)10)11)]	1 C	
IEC Ex db IIC T6 ... T1 Ga/Gb, Gb + IEC Ex t IIIC T[8)10)11)19)]	1 D	
FM (NI) Class I, Div. 2, Groups A, B, C, D[3)5)8)9)]	1 F	
FM (NI) Class I, Div. 2, Groups A, B, C, D + Ship approval[3)5)7)8)9)10)]	1 G	
FM (IS) Class I, II, III, Div. 1, Groups A, B, C, D, E, F[5)8)9)]	1 H	
FM (IS) Class I, II, III, Div. 1, Groups A, B, C, D, E, F, G + shipping approval[4)5)7)8)9)10)]	1 J	
FM (XP-AIS) Class I, II, III, Div. 1, Groups A, B, C, D, E, F, G[2)5)8)9)10)]	1 K	
FM (XP-AIS) Class I, II, III, Div. 1, Groups A, B, C, D, E, F, G + shipping approval[2)5)7)8)9)10)]	1 L	
FM (XP) Class I, Div. 1, Groups A, B, C, D[8)10)19)]	1 M	
CSA (NI) Class I, Div. 2, Groups A, B, C, D; (DIP) Class II, III, Div. 1, Groups E, F, G[1)5)10)]	1 N	
CSA (IS) Class I, II, III, Div. 1, Groups A, B, C, D, E, F, G[5)8)]	1 P	
CSA (XP-IS) Class I, II, III, Div. 1, Groups A, B, C, D, E, F, G[2)5)8)9)10)]	1 Q	
CSA (XP) Class I, II, III, Div. 1, Groups A, B, C, D, E, F, G[8)9)10)11)19)]	1 R	
NEPSI Ex ia IIC T6[5)8)]	2 A	
NEPSI Ex ia IIC T6 + DIP A20/21 TA T*[1)5)8)]	2 B	
NERSI Ex d ia IIC T6[2)5)8)9)10)]	2 C	
NEPSI Ex d ia IIC T6 + DIP A20/21 TA T*[2)5)8)9)10)]	2 D	
NEPSI Ex d IIC T6[8)10)19)]	2 E	
NEPSI Ex d IIC T6 + DIP A20/21 TA T*[8)10)19)]	2 F	
NEPSI DIP A20/21 TA T*[1)8)]	2 G	
INMETRO Ex ia IIC T6 ... T10[5)8)]	3 A	

	Article No.	
SITRANS LG260 Guided radar level transmitter	**7ML5882-**	Ord. code
Continuous, contact, 60 m (197 ft) range. Monitors level in solids.	■■■■■-■■■■	■■■
INMETRO Ex t IIIC T* IP6X, Da, Da/Db, Da/Dc, Db + Ex ia IIC T6, Ga, Ga/Gb[1)5)8)10)]	3 B	
INMETRO Ex d ia IIC T6 ... T1[2)5)8)9)10)]	3 C	
INMETRO Ex t IIIC T* IP6X, Da, Da/Db, Da/Dc, Db + Ex d ia IIC T6 Ga/Gb[2)5)8)9)10)]	3 D	
INMETRO Ex d IIC T6 ... T1[8)10)19)]	3 E	
INMETRO Ex t IIIC T* IP6X, Da, Da/Db, Da/Dc, Db + Ex d IIC T6 Ga/Gb[8)10)19)]	3 F	
INMETRO Ex t IIIC T* IP6X, Da, Da/Db, Da/Dc, Db[1)5)8)10)]	3 G	
KOSHA Ex d IIC T6 ... T1 – KE[8)10)19)]	4 A	
Korea KC ex free area[8)]	6 A	
GOST-R/EAC 0 Ex ia IIC T1 ... T6 X[8)]	5 A	
GOST-R/EAC 0 Ex ia IIC T1 ... T6 X + Ex t IIIC T ... IP66[1)8)]	5 B	
GOST-R/EAC 1 Ex d ia IIC T1 ... T6 X[2)8)9)10)]	5 C	
GOST-R/EAC 1 Ex d ia IIC T1 ... T6 X + Ex t IIIC T ... IP66[2)8)9)10)]	5 D	
GOST-R/EAC 1 Ex d IIC T1 ... T6 X[8)10)19)]	5 E	
GOST-R/EAC 0 Ex d IIC T1 ... T6 X + Ex t IIIC T ... IP66[8)10)19)]	5 F	
GOST-R/EAC Ex t IIIC T ... IP66[1)8)]	5 G	
Note: Version/Material, Process fitting/ Material, and Length options are available only with options of corresponding type.		
Probe version/Material		
Probe exchangeable cable ø 4 mm (0.16 inch) with gravity weight/316[13)14)]	A	
Probe exchangeable cable ø 6 mm (0.24 inch) with gravity weight/316[13)14)]	B	
Probe exchangeable cable ø 6 mm (0.24 inch) with gravity weight/PA coated[15)]	C	
Probe exchangeable cable ø 11 mm (0.43 inch) with gravity weight/PA coated[15)]	D	
Probe exchangeable rod ø 16 mm (0.63 inch)/316L[13)]	E	
Process fitting/Material		
Thread G 3/4" (DIN 3852-A) PN 40/316L	0 0	
Thread 3/4" NPT (ASME B1.20.1) PN 40/316L	0 1	
Thread G 1" (DIN 3852-A) PN 40/316L	0 2	
Thread 1" NPT (ASME B1.20.1) PN 40/316L	0 3	
Thread G 1 1/2" (DIN 3852-A) PN 40/316L	0 4	
Thread 1 1/2" NPT (ASME B1.20.1) PN 40/316L	0 5	
Thread G 2" (DIN 3852-A) PN 40/316L	0 6	
Flange DN 50 PN 40 Form C, DIN 2501/316L	1 0	
Flange DN 80 PN 40 Form C, DIN 2501/316L	1 2	
Flange DN 100 PN 16 Form C, DIN 2501/316L	1 3	
Flange DN 100 PN 40 Form C, DIN 2501/316L	1 4	
Flange DN 150 PN 16 Form C, DIN 2501/316L	1 5	
Flange DN 50 PN 40 EN 1092-1 Form B1/316L	1 6	
Flange DN 80 PN 40 EN 1092-1 Form B1/316L	1 7	
Flange DN 100 PN 16 EN 1092-1 Form B1/316L	1 8	
Flange 2" 150 lb RF, ASME B16.5/316L	3 0	
Flange 2" 300 lb RF, ASME B16.5/316L	3 2	
Flange 3" 150 lb RF, ASME B16.5/316L	3 3	
Flange 3" 300 lb RF, ASME B16.5/316L	3 4	
Flange 4" 150 lb RF, ASME B16.5/316L	3 5	
Flange 4" 300 lb RF, ASME B16.5/316L	3 6	
Flange 6" 150 lb RF, ASME B16.5/316L	3 7	

© Siemens 2020

Selection and ordering data

SITRANS LG260 Guided radar level transmitter	Article No. 7ML5882-	Ord. code
Continuous, contact, 60 m (197 ft) range. Monitors level in solids.	■■■■■-■■■■	■■■
Electronics		
Two-wire 4 ... 20 mA/HART	0	
Four-wire Modbus[2)9)10)]	1	
Two-wire 4 ... 20 mA/HART with SIL qualification[9)]	2	
Four-wire 4 ... 20 mA/HART; 90 ... 253 V AC; 50/60 Hz[2)9)10)]	3	
Four-wire 4 ... 20 mA/HART; 9.6 ... 48 V DC; 20 ... 42 V AC[2)9)10)]	4	
PROFIBUS PA[9)]	5	
FOUNDATION Fieldbus[9)]	6	
Seal/Process temperature		
FKM (SHS FPM 70C3 GLT)/-40 ... +80 °C (-40 ... +176 °F)[16)]	A	
FKM (SHS FPM 70C3 GLT)/-40 ... +150 °C (-40 ... +302 °F)	B	
FFKM (Kalrez 6375)/-20 ... +200 °C (-4 ... +392 °F)	C	
EPDM (A+P 70.10-02)/-40 … +80 °C (-40 … +176 °F)[16)]	D	
EPDM (A+P 70.10-02)/-40 ... +150 °C (-40 ... +392 °F)	E	
Housing/Protection/Cable		
Note: for installation of remote display, 7ML5840, with LG two chamber housing options, contact PVC		
Plastic IP66/IP67 M20 x 1.5/ blind stopper[9)10)]	A	
Plastic IP66/IP67 1/2" NPT/blind stopper[9)10)]	B	
Plastic 2-chamber/IP66/IP67/M20 x 1.5/ blind stopper	C	
Plastic 2-chamber/IP66/IP67/ 1/2" NPT/ blind stopper	D	
Aluminum/IP66/IP68 (0.2 bar) M20 x 1.5/blind stopper[9)10)]	E	
Aluminum/IP66/IP68 (0.2 bar) 1/2" NPT/ blind stopper[9)10)]	F	
Aluminum double chamber/IP66/IP68 (0.2 bar) M20 x 1.5/blind stopper	G	
Aluminum double chamber/IP66/ IP68 (0.2 bar) 1/2" NPT/blind stopper	H	
Stainless Steel (precision casting) 316L/IP66/IP68 (0.2 bar) M20 x 1.5/ blind stopper[9)10)]	J	
Stainless steel (precision casting) 316L/IP66/IP68 (0.2 bar) 1/2" NPT/ blind stopper[9)10)]	K	
Stainless steel (electropolished) 316L/IP66/IP68 (0.2 bar) M20 x 1.5/ blind stopper[9)10)]	L	
Stainless steel (electropolished) 316L/IP66/IP68 (0.2 bar) 1/2" NPT/ blind stopper[9)10)]	M	
Stainless steel double chamber/IP66/IP68 (0.2 bar) M20 x 1.5/blind stopper	N	
Stainless steel double chamber/IP66/ IP68 (0.2 bar) 1/2" NPT/blind stopper	P	
Aluminum/IP66/IP68 (0.2 bar) M20 x 1.5/cable gland stainless steel[9)10)]	Q	
Aluminum double chamber/IP66/IP68 (0.2 bar) M20 x 1.5/cable gland stainless steel	R	
Stainless steel (precision casting) 316L/ IP66/ IP68 (0.2 bar) M20 x 1.5/cable gland stainless steel[9)10)]	S	
Stainless steel (electropolished) 316L/IP66/IP68 (0.2 bar) M20 x 1.5/ cable gland stainless steel[9)10)]	T	
Aluminum single chamber/IP66/IP68 (0.2 bar) M20 x 1.5/cable gland brass nickel-plated	W	
Aluminum double chamber/IP66/IP68 (0.2 bar) M20 x 1.5/cable gland brass nickel-plated	X	
Stainless steel single chamber (precision casting)/IP66/IP68 (0.2 bar) M20 x 1.5/cable gland brass nickel-plated	Y	
Stainless steel double chamber/IP66/IP68 (0.2 bar) M20 x 1.5/cable gland brass nickel-plated	U	
Remote stainless steel single chamber housing, electropolished/IP66/IP67 with cable outlet IP68 (electronics separated by cable); M20 x 1.5/blind plug[10)]	Z	Q 2 A
Remote plastic single chamber housing /IP66/IP67 with cable outlet IP68 (electronics separated by cable); M20 x 1.5/blind plug[10)]	Z	Q 2 B
Lengths		
Rod ø 16 mm/316L		
500 mm (19.69 inch)	0	
501 ... 1 000 mm (19.72 ... 39.37 inch)	1	
1 001 ... 2 000 mm (39.41 ... 78.74 inch)	2	
2 001 ... 3 000 mm (78.78 ... 118.11 inch)	3	
3 001 ... 4 000 mm (118.15 ... 157.48 inch)	4	
4 001 ... 5 000 mm (157.52 ... 196.85 inch)	5	
5 001 ... 6 000 mm (196.89 ... 236.22 inch)	6	
Cable lengths ø 4 mm/316		
501 ... 1 000 mm (19.72 ... 39.37 inch)	9	R 2 E
1 001 ... 5 000 mm (39.41 ... 196.85 inch)	9	R 2 F
5 001 ... 10 000 mm (196.89 ... 393.70 inch)	9	R 2 G
10 001 ... 15 000 mm (393.74 ... 590.55 inch)	9	R 2 H
15 001 ... 20 000 mm (590.59 ... 787.40 inch)	9	R 2 J
20 001 ... 25 000 mm (787.44 ... 984.25 inch)	9	R 2 K
25 001 ... 30 000 mm (984.29 ... 1 181.10 inch)	9	R 2 L
30 001 ... 35 000 mm (1 181.14 ... 1 377.95 inch)	9	R 2 M
35 001 ... 40 000 mm (1 377.99 ... 1 574.80 inch)	9	R 2 N
40 001 ... 45 000 mm (1 574.84 ... 1 771.65 inch)	9	R 2 P
45 001 ... 50 000 mm (1 771.69 ... 1 968.50 inch)	9	R 2 Q
50 001 ... 55 000 mm (1 968.54 ... 2 165.35 inch)	9	R 2 R
55 001 ... 60 000 mm (2 165.39 ... 2 362.20 inch)	9	R 2 S

© Siemens 2020

Selection and ordering data

	Article No.													Order code
SITRANS LG260 Guided radar level transmitter	**7ML5882-**												Ord. code	
Continuous, contact, 60 m (197 ft) range. Monitors level in solids.	■	■	■	■	■	-	■	■	■	■		■	■	
Cable lengths ø 6 mm/316L														
500 mm (19.69 inch)										9		R	4 A	
501 ... 1 000 mm (19.72 ... 39.37 inch)										9		R	4 B	
1 001 ... 5 000 mm (39.41 ... 196.85 inch)										9		R	4 C	
5 001 ... 10 000 mm (196.89 ... 393.70 inch)										9		R	4 D	
10 001 ... 15 000 mm (393.74 ... 590.55 inch)										9		R	4 E	
15 001 ... 20 000 mm (590.59 ... 787.40 inch)										9		R	4 F	
20 001 ... 25 000 mm (787.44 ... 984.25 inch)										9		R	4 G	
25 001 ... 30 000 mm (984.29 ... 1 181.10 inch)										9		R	4 H	
30 001 ... 35 000 mm (1 181.14 ... 1 377.95 inch)										9		R	4 J	
35 001 ... 40 000 mm (1 377.99 ... 1 574.80 inch)										9		R	4 K	
40 001 ... 45 000 mm (1 574.84 ... 1 771.65 inch)										9		R	4 L	
45 001 ... 50 000 mm (1 771.69 ... 1 968.50 inch)										9		R	4 M	
50 001 ... 55 000 mm (1 968.54 ... 2 165.35 inch)										9		R	4 N	
55 001 ... 60 000 mm (2 165.39 ... 2 362.20 inch)										9		R	4 P	
Cable lengths ø 6 mm or ø 11 mm/PA coated														
501 ... 1 000 mm (19.72 ... 39.37 inch)										9		R	6 A	
1 001 ... 5 000 mm (39.41 ... 196.85 inch)										9		R	6 B	
5 001 ... 10 000 mm (196.89 ... 393.70 inch)										9		R	6 C	
10 001 ... 15 000 mm (393.74 ... 590.55 inch)										9		R	6 D	
15 001 ... 20 000 mm (590.59 ... 787.40 inch)										9		R	6 E	
20 001 ... 25 000 mm (787.44 ... 984.25 inch)										9		R	6 F	
25 001 ... 30 000 mm (984.29 ... 1 181.10 inch)										9		R	6 G	
30 001 ... 35 000 mm (1 181.14 ... 1 377.95 inch)										9		R	6 H	
35 001 ... 40 000 mm (1 377.99 ... 1 574.80 inch)										9		R	6 J	
40 001 ... 45 000 mm (1 574.84 ... 1 771.65 inch)										9		R	6 K	
45 001 ... 50 000 mm (1 771.69 ... 1 968.50 inch)										9		R	6 L	
50 001 ... 55 000 mm (1 968.54 ... 2 165.35 inch)										9		R	6 M	
55 001 ... 65 000 mm (2 165.39 ... 2 559.06 inch)										9		R	6 N	

	Order code
Further designs (mandatory)	
Please add "**-Z**" to Article No. and specify Order code(s).	
Supplementary electronics	
Without	**A00**
Additional current output 4 ... 20 mA[10)]	**A01**
Rod mounted	
Without Rod, applicable for coax or cable probe types only	**C00**
Mounted	**C01**
Not mounted	**C02**
Indicating/adjustment module	
Without	**E00**
Mounted	**E01**
Laterally mounted	**E02**
Language of display	
German	**L00**
English	**L01**
French	**L02**
Dutch	**L03**
Italian	**L04**
Spanish	**L05**
Portuguese	**L06**
Russian	**L07**
Chinese	**L08**
Japanese	**L09**
Operating instructions	
German	**M00**
English	**M01**
French	**M02**
Spanish	**M03**
Further designs (optional)	
Please add "**-Z**" to Article No. and specify Order code(s).	
Enter the total insertion length in plain text description	**Y01**
Remote electronic cable lengths: 2 m (6.6 ft). Only available with Housing options Q2A and Q2B.	**Y10**
Remote electronic cable lengths: 5 m (16.4 ft). Only available with Housing options Q2A and Q2B.	**Y11**
Remote electronic cable lengths: 10 m (32.8 ft). Only available with Housing options Q2A and Q2B.	**Y12**
Identification Label (measurement loop) stainless steel, 40 characters max, add in plain text. To add more than one line use a coma "," for line break.	**Y17**
Identification Label (measurement loop) foil, 40 characters max, add in plain text. To add more than one line use a coma "," for line break.	**Y18**

© Siemens 2020

Selection and ordering data	Order code
Material Inspection certificate 3.1 of EN 10204	**C05**
3.1-Inspection Certificate for instrument (EN 10204)[17]	**C12**
Inspection certificate 3.1 (EN 10204, NACE MR 0175) - material.[17][18] Note: 316L probes include NACE MR 0175 and MR 0103, non 316L probes include MR 0175 only and plated flange designs are not available with NACE certificate.	**D07**
3.1-Inspection Certificate for instrument with test data (EN 10204)[17]	**C25**
2.2-Factory certificate for material (EN 10204)[17]	**C15**
Quality and test plan[17]	**C26**
Dye penetration test, results confirmed via a 3.1 certificate/instrument (EN10204)[17]	**C13**
X-ray test + 3.1 certificate/instrument[17]	**C14**
Positive material identification test + 3.1 certificate/instrument[17]	**C16**
Roughness test + 3.1 certificate/instrument[17]	**C18**
Pressure test + 3.1 certificate/instrument[17]	**C31**
Helium leak test + 3.1 certificate/instrument[17]	**C32**
Pressure test according to Norsok + 3.1 certificate/instrument[17]	**C61**
5 point calibration certificate (min. length 500 mm)[17]	**C62**
Operating Instructions	
All literature is available to download for free, in a range of languages, at	

http://www.siemens.com/processinstrumentation/documentation

Accessories	Article No.
SITRANS LG, GWR sensor Display Module	**A5E34143449**
SITRANS LG, two-wire 4 ... 20 mA/HART electronic	**A5E35637821**
SITRANS LG, USB communicator	**A5E35192015**
SITRANS LG, Mounting eye M12 x 20	**PBD:51041448**
SITRANS LG, Mounting spring	**PBD:51041449**
Siemens Intrinsically Safe Barrier (DC powered), ATEX II 1 G EEx ia	**7NG4124-0AA00**
SITRANS RD100, loop powered display - see Chapter 7	**7ML5741-.....-.**
SITRANS RD150, remote digital display for 4 ... 20 mA and HART devices - see Chapter 7	**7ML5742-.....-....**
SITRANS RD200, universal input display with Modbus conversion - see Chapter 7	**7ML5740-.....-..**
SITRANS RD300, dual line display with totalizer and linearization curve and Modbus conversion - see Chapter 7	**7ML5744-.....-..**
For applicable back up point level switch - see point level measurement section	

Note: some configuration options are not available.
For restriction information see the online PIA configuration tool.

1) Not available with Plastic and Stainless steel (electropolished) Housing/Protection/Cable options and certain glands.
2) Available only with Double chamber, Metallic Housing/Protection/Cable options and certain glands.
3) Not available with Remote and Stainless steel (electropolished) Housing/Protection/Cable options and certain glands.
4) Not available with Stainless steel (electropolished) Housing/Protection/Cable options and certain glands.
5) Not available with Seal/Process temperature option C.
6) Not available with Housing/Protection/Cable options W, X, Y, and U.
7) Not available with Probe version/Material option E.
8) Available only with certain Electronics options.
9) Available only with Supplementary electronic option A00.
10) Not available with Indicating/adjustment module option E02.
11) Not available with Seal/Process temperature options B and E.
12) Available only with Seal/Process temperature option C.
13) Not available with Seal/Process temperature options A and D.
14) Available only with Rod mounted option C00.
15) Available only with Seal/Process temperature options A and D.
16) Not available with Housing/Protection/Cable options Q2A and Q2B.
17) Listed Certificates are not available with all configurations, please contact factory for more information.
18) Available only with 316L Probes. NACE is not available with coated, plated, or hygienic connections.
19) Available only with Single chamber, Aluminum and Stainless steel (precision casting) Housing/Protection/Cable options.

Note: Please consult manual for further details.

© Siemens 2020

Selection and ordering data

	Article No.	
SITRANS LG270 Guided radar level transmitter ↗	**7ML5883-**	Ord. code
Continuous, contact, 60 m (197 ft) range. Monitors level and interface in liquids in extreme environments.	-	
↗ Click on the Article No. for the online configuration in the PIA Life Cycle Portal.		
Approvals		
General purpose (CSA, FM, CE)[32]	0 A	
Shipping approval[1)2)3)4)5)]	0 B	
Overfill protection (WHG; VLAREM)[2)3)]	0 C	
ATEX II 1G, 1/2G, 2G Ex ia IIC T6[2)32)]	0 E	
ATEX II 1G, 1/2G, 2G Ex ia IIC + Overfill (WHG; VLAREM)[2)3)]	0 F	
ATEX II 1G, 1/2G, 2G Ex ia IIC T6 + shipping approval[1)2)3)4)5)]	0 G	
ATEX II 1G,1/2G 2G Ex ia IIC + ATEX II 1D, 1/2D, 2D IP6x[2)7)]	0 H	
ATEX II 1/2G, 2G Ex d ia IIC T6[2)5)6)8)32)]	0 J	
ATEX II 1/2G, 2G Ex d ia IIC + shipping approval[1)2)3)5)6)8)]	0 L	
ATEX II 1/2G, 2G Ex d ia IIC + ATEX II 1/2D, 2D IP6x[2)5)6)8)]	0 M	
ATEX II 1/2G, 2G Ex d IIC T6[6)7)32)]	0 N	
ATEX II 1G, II 1/2G, II 2G Ex ia IIC T6 ... T1 Ga, Ga/Gb, Gb /IEC Ex ia IIC T6 ... T1 Ga, Ga/Gb, Gb[2)3)]	0 W	
ATEX II 1/2G, 2G Ex d IIC + ship approval[1)2)3)5)6)7)]	0 Q	
ATEX II 1/2G, 2G Ex d IIC + ATEX II 1/2D, 2D IP6x[2)6)7)]	0 R	
ATEX II 1D, 1/2D, 2D IP6x T[2)7)]	0 S	
ATEX II 1/2G, II 2G Ex db IIC T6 ... T1 Ga/Gb, Gb + Overfill protection (WHG, VLAREM)[6)7)32)]	7 P	
IEC Ex ia IIC T6[2)]	0 T	
IEC Ex ia IIC T6 + IEC IP6x T tD[2)7)32)]	0 U	
IEC Ex d ia IIC T6[2)5)6)8)32)]	1 A	
IEC Ex d ia IIC T6 + IEC IP6x T tD[2)5)6)8)]	1 B	
IEC Ex d IIC T6[3)6)7)]	1 C	
IEC Ex d IIC T6 + IEC IP6x T tD[2)3)6)7)]	1 D	
IEC Ex db IIC T6 ... T1 Ga/Gb, Gb + Ship approval[2)3)5)6)7)9)]	7 C	
IEC Ex ia IIC T6 ... T1 Ga, Ga/Gb, Gb + Ship approval[2)9)12)]	7 D	
IEC Ex d ia IIC T6 ... T1 Ga/Gb, Gb + Ship approval[2)5)6)8)9)]	7 E	
FM (NI) Class I, Div. 2, Groups A, B, C, D[2)5)10)32)]	1 F	
FM (NI) Class I, Div. 2, Groups A, B, C, D + ship approval[1)2)3)5)8)]	1 G	
FM (IS) Class I, II, III, Div. 1, Groups A, B, C, D, E, F[2)5)32)]	1 H	
FM (IS) Class I, II, III, Div. 1, Groups A, B, C, D, E, F, G + ship approval[1)2)3)4)5)]	1 J	
FM (XP-AIS) Class I, II, III, Div. 1, Groups A, B, C, D, E, F, G[2)5)6)8)32)]	1 K	
FM (XP-AIS) Class I, II, III, Div. 1, Groups A, B, C, D, E, F, G + shipping approval[1)2)3)5)6)8)]	1 L	
FM (XP) Class I, Div. 1, Groups A, B, C, D[6)11)32)]	1 M	
CSA (NI) Class I, Div. 2, Groups A, B, C, D; (DIP) Class II, III, Div. 1, Groups E, F, G[3)6)7)]	1 N	
CSA (IS) Class I, II, III, Div. 1, Groups A, B, C, D, E, F, G[2)3)]	1 P	
CSA (XP-IS) Class I, II, III, Div. 1, Groups A, B, C, D, E, F, G[2)3)5)6)8)]	1 Q	
CSA (XP) Class I, II, III, Div. 1, Groups A, B, C, D, E, F, G[3)5)6)11)19)]	1 R	
CSA (NI) Class I, II, III Div. 2, Groups A, B, C, D, F, G + Ship approval[2)3)6)7)9)]	7 K	

	Article No.	
SITRANS LG270 Guided radar level transmitter	**7ML5883-**	Ord. code
Continuous, contact, 60 m (197 ft) range. Monitors level and interface in liquids in extreme environments.	-	
CSA (IS) Class I, II, III, Div. 1, Groups A, B, C, D, E, F, G + Ship approval[2)6)9)12)]	7 L	
CSA (XP-IS) Class I, II, III, Div. 1, Groups A, B, C, D, E, F, G + Ship approval[2)3)5)6)8)9)]	7 M	
NEPSI Ex ia IIC T6[2)3)]	2 A	
NEPSI Ex ia IIC T6 + DIP A20/21 TA T*[2)5)7)]	2 B	
NERSI Ex d ia IIC T6[2)3)5)6)8)]	2 C	
NEPSI Ex d ia IIC T6 + DIP A20/21 TA T*[2)3)5)6)8)]	2 D	
NEPSI Ex d IIC T6[2)3)6)11)]	2 E	
NEPSI Ex d IIC T6 + DIP A20/21 TA T*[2)3)6)11)]	2 F	
NEPSI DIP A20/21 TA T*[2)3)7)]	2 G	
INMETRO Ex ia IIC T6 ... T1[2)32)]	3 A	
INMETRO Ex t IIIC T* IP6X, Da, Da/Db, Da/Dc, Db + Ex ia IIC T6, Ga, Ga/Gb[2)6)7)]	3 B	
INMETRO Ex d ia IIC T6 ... T1[2)5)6)8)32)]	3 C	
INMETRO Ex t IIIC T* IP6X, Da, Da/Db, Da/Dc, Db + Ex d ia IIC T6 Ga/Gb[2)5)68)]	3 D	
INMETRO Ex d IIC T6 ... T1[2)6)11)32)]	3 E	
INMETRO Ex t IIIC T* IP6X, Da, Da/Db, Da/Dc, Db + Ex d IIC T6 Ga/Gb[2)6)11)]	3 F	
INMETRO Ex t IIIC T* IP6X, Da, Da/Db, Da/Dc, Db[2)6)7)]	3 G	
KOSHA Ex d IIC T6 ... T1 – KE[2)3)6)11)]	4 A	
Korea KC ex free area[2)32)]	6 A	
GOST-R/EAC 0 Ex ia IIC T1 ... T6 X[2)3)13)]	5 A	
GOST-R/EAC 0 Ex ia IIC T1 ... T6 X + Ex t IIIC T ... IP66[2)3)7)]	5 B	
GOST-R/EAC 1 Ex d ia IIC T1 ... T6 X[2)3)5)6)8)]	5 C	
GOST-R/EAC 1 Ex d ia IIC T1 ... T6 X + Ex t IIIC T ... IP66[2)3)5)6)8)]	5 D	
GOST-R/EAC 1 Ex d IIC T1 ... T6 X[2)3)6)11)]	5 E	
GOST-R/EAC 0 Ex d IIC T1 ... T6 X + Ex t IIIC T ... IP66[2)3)6)11)]	5 F	
GOST-R/EAC Ex t IIIC T ... IP66[2)3)14)]	5 G	
Note: Version/Material, Process fitting/ Material, and Length options are available only with options of corresponding type.		
Version/Material		
Probe exchangeable cable ø 2 mm (0.08 inch) with gravity weight/316[15)16)17)]	A	
Probe exchangeable cable ø 2 mm (0.08 inch) center weight/316L[15)17)18)]	B	
Probe exchangeable cable ø 4 mm (0.16 inch) with gravity weight/316L[15)16)17)]	C	
Probe exchangeable cable ø 4 mm (0.16 inch) with center weight/316L[15)17)18)]	D	
Probe exchangeable rod ø 16 mm (0.63 inch)/316L[16)19)20)]	E	
Probe coax version ø 42.2 mm (1.66 inch) with multiple hole/316L[16)17)20)]	F	
Probe coax version ø 42.2 mm (1.66 inch); multiple hole; reference distances/316L[16)17)20)21)26)]	G	
Probe exchangeable cable ø 4 mm (0.16 inch) with gravity weight/ Alloy C22 (2.4602)[22)30)]	H	
Probe exchangeable rod ø 16 mm (0.63 inch)/Alloy C22 (2.4602)[22)30)]	J	
Coax version ø 42.2 mm (1.66 inch) with multiple hole/Alloy C22 (2.4602)[22)30)]	K	
Exchangeable rod, diameter 8 mm (0.32 inch)/316L[19)23)]	L	
Coax ø 21.3 mm (0.838 inch) with multiple hole/316L[23)]	M	

© Siemens 2020

Selection and ordering data

	Article No.	
SITRANS LG270 Guided radar level transmitter Continuous, contact, 60 m (197 ft) range. Monitors level and interface in liquids in extreme environments.	**7ML5883-** ■■■■■ - ■■■■	Ord. code ■■■
Process fitting/Material		
Thread G 1 1/2" (DIN 3852-A) PN 400/316L[20)]	0 0	
Thread 1 1/2" NPT (ASME B1.20.1) PN 400/316L[20)]	0 1	
Thread G1 1/2" PN 400, DIN 3852-A/ Alloy C22 (2.4602)	0 2	
Thread 1 1/2" NPT PN 400, ASME B1.20.1/ Alloy C22 (2.4602)	0 3	
Flange DN 50 PN 40 Form C, DIN 2501/ 316L with Alloy C22 (2.4602) coating	0 4	
Flange DN 80 PN 40 Form C, DIN 2501/ 316L with Alloy C22 (2.4602) coating	0 5	
Flange DN 100 PN 16 Form C, DIN 2501/ 316L with Alloy C22 (2.4602) coating	0 6	
Flange DN 50 PN 40 Form B1, EN 1092-1/ 316L with Alloy C22 (2.4602) coating	0 7	
Flange DN 50 PN 63 Form B1, EN 1092-1/ 316L with Alloy C22	0 8	
Flange DN 50 PN 40 Form C, DIN 2501/316L	1 0	
Flange DN 50 PN 40 form V13, DIN 2513/316L	1 1	
Flange DN 65 PN 64 Form V13, DIN 2501/316L	1 2	
Flange DN 80 PN 40 Form C, DIN 2501/316L	1 3	
Flange DN 80 PN 40 Form V13, DIN 2501/316L	1 4	
Flange DN 80 PN 100 Form L, DIN 2501/316L[20)]	1 5	
Flange DN 100 PN 16 Form C, DIN 2501/316L	1 6	
Flange DN 100 PN 16 Form V13, DIN 2501/316L	1 7	
Flange DN 100 PN 40 Form C, DIN 2501/316L	1 8	
Flange DN 100 PN 40 Form V13, DIN 2513/316L	2 0	
Flange DN 150 PN 16 Form C, DIN 2501/316L	2 1	
Flange DN 50 PN 40 EN 1092-1 Form B1/316L	2 2	
Flange DN 100 PN 160 GOST 12815-80.7/ 316L[20)]	2 3	
Flange 2" 150 lb RF, ASME B16.5/316L with Alloy C22 (2.4602) coating	2 4	
Flange 2" 300 lb RF, ASME B16.5/316L with Alloy C22 (2.4602) coating	2 5	
Flange 2" 600 lb RF, ASME B16.5/316L with Alloy C22 (2.4602) coating	2 6	
Flange 3" 150 lb RF, ASME B16.5/316L with Alloy C22 (2.4602) coating	2 7	
Flange 3" 300 lb RF, ASME B16.5/316L with Alloy C22 (2.4602) coating	2 8	
Flange DN 80 PN 160 Form C, DIN 2501/316L[20)]	6 0	
Flange DN 80 PN 250 Form L, DIN 2501/316L[20)]	6 1	
Flange DN 50 PN 160, EN 1092-1 Form B1/316L[20)]	6 2	
Flange DN 50 PN 160, EN 1092-1 Form B2/316L[20)]	6 3	
Flange DN 50 PN 32, EN 1092-1 Form B1/316L[20)]	6 4	
Flange DN 65 PN 250, EN 1092-1 Form B1/316L[20)]	6 5	
Flange DN 100 PN 160, EN 1092-1 Form B2/316L[20)]	6 6	
Flange DN 80 PN 63, EN 1092-1 Form B2/316L	6 7	
Flange 4" 600 lb RF, ASME B16.5/ 316L with Alloy C22 (2.4602) coating	6 8	

	Article No.	
SITRANS LG270 Guided radar level transmitter Continuous, contact, 60 m (197 ft) range. Monitors level and interface in liquids in extreme environments.	**7ML5883-** ■■■■■ - ■■■■	Ord. code ■■■
Flange 2" 150 lb RF, ASME B16.5/316L	3 0	
Flange 2" 300 lb RF, ASME B16.5/316L	3 1	
Flange 2" 600 lb RF, ASME B16.5/316L	3 2	
Flange 2" 1 500 lb RF, ASME B16.5/316L	3 3	
Flange 3" 150 lb RF, ASME B16.5/316L	3 4	
Flange 3" 300 lb RF, ASME B16.5/316L	3 5	
Flange 3" 600 lb RF, ASME B16.5/316L	3 6	
Flange 3" 900 lb RF, ASME B16.5/316L	3 7	
Flange 3" 2 500 lb RF, ASME B16.5/316L	3 8	
Flange 3 1/2" 600 lb RF, ASME B16.5/316L	4 0	
Flange 4" 150 lb RF, ASME B16.5/316L	4 1	
Flange 4" 300 lb RF, ASME B16.5/316L	4 2	
Flange 4" 600 lb RF, ASME B16.5/316L	4 3	
Flange 6" 150 lb RF, ASME B16.5/316L	4 4	
Flange 6" 300 lb RF, ASME B16.5/316L	4 5	
Flange 6" 600 lb RF, ASME B16.5/316L	4 6	
Flange 2" 150 lb Fisher special return/316L	4 7	
Flange 3" 900 lb RJF, ASME B16.5/ Alloy C22 (2.4602)	4 8	
Flange 2" 900 lb RF, ASME B16.5/316L	5 0	
Flange 3" 1 500 lb RF, ASME B16.5/316L	5 1	
Flange 4" 900 lb RF, ASME B16.5/316L	5 2	
Flange 4" 1 500 lb RF, ASME B16.5/316L	5 3	
Flange 4" 2 500 lb RJF, ASME B16.5/316L[20)]	5 4	
Flange 4" 1500 lb RJF, ASME B16.5/316L[20)]	5 5	
Flange 3" 600 lb RF, ASME B16.5/316L with Alloy C22 (2.4602) coating	5 6	
Flange 4" 150 lb RF, ASME B16.5/316L with Alloy C22 (2.4602) coating	5 7	
Flange 4" 300 lb RF, ASME B16.5/316L with Alloy C22 (2.4602) coating	5 8	
Flange 6" 150 lb RF, ASME B16.5/316L with Alloy C22 (2.4602) coating	7 0	
Flange DN 50 PN 40 Form C, DIN 2501/Alloy C22 (2.4602) solid	7 1	
Flange DN 100 PN 16 Form C, DIN 2501/C22 solid	7 2	
Flange DN 100 PN 40 Form N, DIN 2501/Alloy C22 (2.4602) solid	7 3	
Flange DN 50 PN 40 Form B1, EN 1092-1/Alloy C22 (2.4602) solid	7 4	
Flange 2" 150 lb RF, ASME B16.5/ Alloy C22 (2.4602) solid	7 5	
Flange 2" 300 lb RF, ASME B16.5/ Alloy C22 (2.4602) solid	7 6	
Flange 2" 600 lb RF, ASME B16.5/ Alloy C22 (2.4602) solid	7 7	
Flange 2" 900 lb RJF, ASME B16.5/ Alloy C22 (2.4602) solid	7 8	
Flange 2" 1 500 lb RJF, ASME B16.5/ Alloy C22 (2.4602) solid	8 0	
Flange 3" 150 lb RF, ASME B16.5/ Alloy C22 (2.4602) solid	8 1	
Flange 3" 300 lb RF, ASME B16.5/ Alloy C22 (2.4602) solid	8 2	
Flange 3" 600 lb RF, ASME B16.5/ Alloy C22 (2.4602) solid	8 3	
Flange 4" 150 lb RF, ASME B16.5/ Alloy C22 (2.4602) solid	8 4	
Flange 4" 300 lb RF, ASME B16.5/ Alloy C22 (2.4602) solid	8 5	
Flange 3" 600 lb RJF for R31, ASME B16.5/ Alloy C22 (2.4602) solid	8 6	

© Siemens 2020

Selection and ordering data

	Article No.	
SITRANS LG270 Guided radar level transmitter	**7ML5883-**	Ord. code
Continuous, contact, 60 m (197 ft) range. Monitors level and interface in liquids in extreme environments.	■■■■■ - ■■■■	■■■
Flange 2" 2 500 lb RJF, ASME B16.5/ Alloy C22 (2.4602) solid	9 0	L 1 A
Flange 3" 1 500 lb RJF, ASME B16.5/ Alloy C22 (2.4602) solid	9 0	L 1 B
Flange 3" 2 500 lb RJF, ASME B16.5/ Alloy C22 (2.4602) solid	9 0	L 1 C
Flange 4" 600 lb RF, ASME B16.5/ Alloy C22 (2.4602) solid	9 0	L 1 D
Flange 4" 600 lb RJF, ASME B16.5/ Alloy C22 (2.4602) solid	9 0	L 1 E
Flange 4" 900 lb RF, ASME B16.5/ Alloy C22 (2.4602) solid	9 0	L 1 F
Flange 4" 900 lb RJF, ASME B16.5/ Alloy C22 (2.4602) massiv	9 0	L 1 G
Flange 4" 1 500 lb RJF, ASME B16.5/ Alloy C22 (2.4602) solid	9 0	L 1 H
Flange 4" 2 500 lb RJF, ASME B16.5/ Alloy C22 (2.4602) solid	9 0	L 1 J
Flange 8" 300 lb RF, ASME B16.5/ Alloy C22 (2.4602) solid	9 0	L 1 K
Flange 3½" 600 lb Fisher type 249B and 259B/Alloy C22 (2.4602) solid	9 0	L 1 L
Flange 2½" 300 lb RF, ASME B16.5/316/316L	9 0	L 2 A
Flange 2½" 600 lb RF, ASME B16.5/316/316L	9 0	L 2 B
Flange DN 50 PN 40 Form D, EN 1092-1/316/316L[24)]	9 0	L 2 C
Flange 2½" 1 500 lb RF, ASME B16.5/316/316L	9 0	L 2 D
Flange 2" 600 lb RF, ASME B16.5/316L (Norsok)[34)35)]	9 0	L 2 E
Thread G 1" (DIN 3852-A) PN 100/316L	9 0	L 3 C
Thread 1" NPT, ASME B1.20.1/PN 100/316L	9 0	L 3 D
Thread G 1½" (DIN 3852-A) PN 100/316L	9 0	L 3 E
Thread 1½" NPT, ASME B1.20.1/PN 100/316L	9 0	L 3 F
Thread 2" NPT, ASME B1.20.1/PN 100/316L	9 0	L 3 G
Thread G ¾ PN100, DIN 3852-A/316L[31)]	9 0	L 3 H
Thread ¾ NPT PN100, ASME B1.20.1/31[31)]	9 0	L 3 J
Electronics		
Two-wire 4 ... 20 mA/HART	0	
Four-wire Modbus[5)6)8)]	1	
Two-wire 4 ... 20 mA/HART with SIL qualification[5)]	2	
Four-wire 4 ... 20 mA/HART; 90 ... 253 V AC; 50/60 Hz[5)6)8)]	3	
Four-wire 4 ... 20 mA/HART; 9.6 ... 48 V DC; 20 ... 42 V AC[5)6)8)]	4	
PROFIBUS PA[5)]	5	
FOUNDATION Fieldbus[5)]	6	
Seal/Second line of defense/ Process temperature		
Ceramic-graphite/with glass seal/ -196 ... +280 °C (-321 ... +536 °F)	A	
Ceramic-graphite/with glass seal/ -196 ... +450 °C (-321 ... +842 °F)	B	
Ceramic-graphite/with glass seal/ -196 ... +400 °C (-321 ... +752 °F)[21)]	C	
PEEK-FFKM (Kalrez 6375) /with glass seal/ -20...+250 °C (-4 ... +482 °F)[21)]	D	

	Article No.	
SITRANS LG270 Guided radar level transmitter	**7ML5883-**	Ord. code
Continuous, contact, 60 m (197 ft) range. Monitors level and interface in liquids in extreme environments.	■■■■■ - ■■■■	■■■
Housing/Protection/Cable		
Note: for installation of remote display, 7ML5840, with LG two chamber housing options, contact PVC		
Plastic IP66/IP67 M20 x 1.5/blind stopper	A	
Plastic IP66/IP67 1/2" NPT/blind stopper	B	
Aluminum/IP66/IP68 (0.2 bar) M20 x 1.5/blind stopper	C	
Aluminum/IP66/IP68 (0.2 bar) 1/2" NPT/ blind stopper	D	
Aluminum double chamber/IP66/IP68 (0.2 bar) M20 x 1.5/blind stopper	E	
Aluminum double chamber/IP66/IP68 (0.2 bar) 1/2" NPT/blind stopper	F	
Stainless steel (precision casting) 316L/IP66/IP68 (0.2 bar) M20 x 1.5/ blind stopper	L	
Stainless steel (precision casting) 316L/IP66/IP68 (0.2 bar) 1/2" NPT/ blind stopper	M	
Stainless steel (electropolished) 316L/IP66/IP68 (0.2 bar) M20 x 1.5/ blind stopper	N	
Stainless steel (electropolished) 316L/IP66/IP68 (0.2 bar) 1/2" NPT/ blind stopper	P	
Stainless steel double chamber/IP66/IP68 (0.2 bar) M20 x 1.5/blind stopper	Q	
Stainless steel double chamber/IP66/IP68 (0.2 bar) 1/2" NPT/blind stopper	R	
Aluminum/IP66/IP68 (0.2 bar) M20 x 1.5/cable gland stainless steel	S	
Aluminum double chamber/IP66/IP68 (0.2 bar) M20 x 1.5/cable gland stainless steel	T	
Stainless steel (precision casting) 316L/IP66/IP68 (0.2 bar) M20 x 1.5/cable gland stainless steel	U	
Stainless steel (electropolished) 316L/IP66/IP68 (0.2 bar) M20 x 1.5/cable gland stainless steel	V	
Aluminum single chamber/IP66/IP68 (0.2 bar) M20 x 1.5/cable gland brass nickel-plated	W	
Aluminum double chamber/IP66/IP68 (0.2 bar) M20 x 1.5/cable gland brass nickel-plated	X	
Stainless steel single chamber (precision casting)/IP66/IP68 (0.2 bar) M20 x 1.5/cable gland brass nickel-plated	Y	
Stainless steel double chamber/IP66/IP68 (0.2 bar) M20 x 1.5/cable gland brass nickel-plated	J	
Remote stainless steel single chamber housing, electropolished/IP66/IP67 with cable outlet IP68 (electronics separated by cable); M20 x 1.5/blind plug[6)]	Z	Q 2 A
Remote plastic single chamber housing /IP66/IP67 with cable outlet IP68 (electronics separated by cable); M20 x 1.5/blind plug[6)]	Z	Q 2 B

© Siemens 2020

Selection and ordering data

SITRANS LG270 Guided radar level transmitter	Article No. 7ML5883-	Ord. code
Continuous, contact, 60 m (197 ft) range. Monitors level and interface in liquids in extreme environments.	■■■■■ - ■■■■	■■■
Lengths		
Rod ø 16 mm/316L		
300 mm (11.81 inch)[25]	0	
500 mm (19.69 inch)[25]	1	
501 ... 1 000 mm (19.72 ... 39.37 inch)[25]	2	
1 001 ... 2 000 mm (39.41 ... 78.74 inch)[25]	3	
2 001 ... 3 000 mm (78.78 ... 118.11 inch)[25]	4	
3 001 ... 4 000 mm (118.15 ... 157.48 inch)[25]	5	
4 001 ... 5 000 mm (157.52 ... 196.85 inch)[25]	6	
5 001 ... 6 000 mm (196.89 ... 236.22 inch)[25]	7	
Rod ø 16 mm/C22		
501 ... 1 000 mm (19.72 ... 39.37 inch)[25]	9	R 1 A
1 001 ... 2 000 mm (39.41 ... 78.74 inch)[25]	9	R 1 B
2 001 ... 3 000 mm (78.78 ... 118.11 inch)[25]	9	R 1 C
3 001 ... 4 000 mm (118.15 ... 157.48 inch)[25]	9	R 1 D
4 001 ... 5 000 mm (157.52 ... 196.85 inch)[25]	9	R 1 E
5 001 ... 6 000 mm (196.89 ... 236.22 inch)[25]	9	R 1 F
Rod ø 8 mm/316L		
300 ... 1 000 mm (11.81 ... 39.37 inch)	9	R 1 H
1 001 ... 2 000 mm (39.41 ... 78.74 inch)	9	R 1 J
2 001 ... 3 000 mm (78.78 ... 118.11 inch)	9	R 1 K
3 001 ... 4 000 mm (118.15 ... 157.48 inch)	9	R 1 L
4 001 ... 5 000 mm (157.52 ... 196.85 inch)	9	R 1 M
5 001 ... 6 000 mm (196.89 ... 236.22 inch)	9	R 1 N
Cable lengths ø 2 or 4 mm/316L		
501 ... 1 000 mm (19.72 ... 39.37 inch)	9	R 2 E
1 000 ... 5 000 mm (39.37 ... 196.85 inch)	9	R 2 F
5 001 ... 10 000 mm (196.89 ... 393.70 inch)	9	R 2 G
10 001 ... 15 000 mm (393.74 ... 590.55 inch)	9	R 2 H
15 001 ... 20 000 mm (590.59 ... 787.40 inch)	9	R 2 J
20 001 ... 25 000 mm (787.44 ... 984.25 inch)	9	R 2 K
25 001 ... 30 000 mm (984.29 ... 1 181.10 inch)	9	R 2 L
30 001 ... 35 000 mm (1 181.14 ... 1 377.95 inch)	9	R 2 M
35 001 ... 40 000 mm (1 377.99 ... 1 574.80 inch)	9	R 2 N
40 001 ... 45 000 mm (1 574.84 ... 1 771.65 inch)	9	R 2 P
45 001 ... 50 000 mm (1 771.69 ... 1 968.50 inch)	9	R 2 Q
50 001 ... 55 000 mm (1 968.54 ... 2 165.35 inch)	9	R 2 R
55 001 ... 60 000 mm (2 165.39 ... 2 362.20 inch)	9	R 2 S

SITRANS LG270 Guided radar level transmitter	Article No. 7ML5883-	Ord. code
Continuous, contact, 60 m (197 ft) range. Monitors level and interface in liquids in extreme environments.	■■■■■ - ■■■■	■■■
Cable lengths ø 4 mm/ C22		
501 ... 1 000 m (19.72 ... 39.37 inch)	9	R 4 A
1 000 ... 5 000 mm (39.37 ... 196.85 inch)	9	R 4 B
5 001 ... 10 000 mm (196.89 ... 393.70 inch)	9	R 4 C
10 001 ... 15 000 mm (393.74 ... 590.55 inch)	9	R 4 D
15 001 ... 20 000 mm (590.59 ... 787.40 inch)	9	R 4 E
20 001 ... 25 000 mm (787.44 ... 984.25 inch)	9	R 4 F
25 001 ... 30 000 mm (984.29 ... 1 181.10 inch)	9	R 4 G
30 001 ... 35 000 mm (1 181.14 ... 1 377.95 inch)	9	R 4 H
35 001 ... 40 000 mm (1 377.99 ... 1 574.80 inch)	9	R 4 J
40 001 ... 45 000 mm (1 574.84 ... 1 771.65 inch)	9	R 4 K
45 001 ... 50 000 mm (1 771.69 ... 1 968.50 inch)	9	R 4 L
50 001 ... 55 000 mm (1 968.54 ... 2 165.35 inch)	9	R 4 M
55 001 ... 60 000 mm (2 165.39 ... 2 362.20 inch)	9	R 4 N
Coax ø 42.2 mm/316L		
300 ... 1 000 mm (11.81 ... 39.37 inch)[25]	9	R 3 G
1 001 ... 2 000 mm (39.41 ... 78.74 inch)[25][26]	9	R 3 H
2 001 ... 3 000 mm (78.78 ... 118.11 inch)[25]	9	R 3 J
3 001 ... 4 000 mm (118.15 ... 157.48 inch)[25]	9	R 3 K
4 001 ... 5 000 mm (157.52 … 196.85 inch)[25]	9	R 3 L
5 001 … 6 000 mm (196.89 … 236.22 inch)[25]	9	R 3 M
Coax ø 42.2 mm/C22		
300 ... 1 000 mm (11.81 ... 39.37 inch)[25]	9	R 3 Q
1 001 ... 2 000 mm (39.41 ... 78.74 inch)[25][26]	9	R 3 R
2 001 ... 3 000 mm (78.78 ... 118.11 inch)[25]	9	R 3 S
3 001 ... 4 000 mm (118.15 ... 157.48 inch)[25]	9	R 3 T
4 001 ... 5 000 mm (157.52 ... 196.85 inch)[25]	9	R 3 U
5 001 ... 6 000 mm (196.89 ... 236.22 inch)[25]	9	R 3 V
Coax ø 21.3 mm/316L		
300 ... 1 000 mm (11.81 ... 39.37 inch)	9	R 5 A
1 001 ... 2 000 mm (39.41 ... 78.74 inch)	9	R 5 B
2 001 ... 3 000 mm (78.78 ... 118.11 inch)	9	R 5 C
3 001 ... 4 000 mm (118.15 ... 157.48 inch)	9	R 5 D
4 001 ... 5 000 mm (157.52 ... 196.85 inch)	9	R 5 E
5 001 ... 6 000 mm (196.89 ... 236.22 inch)	9	R 5 F

© Siemens 2020

Selection and ordering data

	Order code
Further designs (mandatory)	
Please add "**-Z**" to Article No. and specify Order code(s).	
Supplementary electronics	
Without	**A00**
Additional current output 4 ... 20 mA[6)]	**A01**
Dimensions centering weight (diameter/height)	
Without	**B00**
ø 40/30 mm	**B01**
ø 45/30 mm (for 2 inch tubes)	**B02**
ø 75/30 mm (for 3 inch tubes)	**B03**
ø 95/30 mm (for 4 inch tubes)	**B04**
ø 40 mm/30 mm ø 1.57 inch/1.18 inch (for 2 inch Schedule 160)	**B05**
ø 45 mm/30 mm (for 2 inch tubes) ø 1.77 inch/1.18 inch (for 2 inch Schedule 40/80)	**B06**
ø 75 mm/30 mm (for 3 inch tubes) ø 2.95 inch/1.18 inch (for 3 inch Schedule 10/40)	**B07**
ø 95 mm/30 mm (for 4 inch tubes) ø 3.74 inch/1.18 inch (for 4 inch Schedule 80)	**B08**
Rod mounted	
Without Rod, applicable for coax or cable probe types only	**C00**
Mounted	**C01**
Not mounted	**C02**
Indicating/adjustment module	
Without	**E00**
Mounted	**E01**
Laterally mounted	**E02**
Language of display	
German	**L00**
English	**L01**
French	**L02**
Dutch	**L03**
Italian	**L04**
Spanish	**L05**
Portuguese	**L06**
Russian	**L07**
Chinese	**L08**
Japanese	**L09**
Operating instructions	
German	**M00**
English	**M01**
French	**M02**
Spanish	**M03**

	Order code
Further designs (optional)	
Please add "**-Z**" to Article No. and specify Order code(s).	
Enter the total insertion length in plain text description	**Y01**
Y02 rigid part is 100 mm, only applicable for cable versions	**Y02**
Reference probe G length of reference distance = 260 mm/10.24 inches (note blanking 450 mm required with min. probe 1 000 mm)	**Y05**
Reference probe G length of reference distance = 500 mm/19.69 inches (note blanking 690 mm required with min. probe 1 250 mm)	**Y06**
Reference probe G length of reference distance = 750 mm/29.53 inches (note blanking 940 mm required with min. probe 1 500 mm)	**Y07**
Remote electronic cable lengths: 2 m (6.6 ft). Only available with Housing options Q2A and Q2B	**Y10**
Remote electronic cable lengths: 5 m (16.4 ft). Only available with Housing options Q2A and Q2B	**Y11**
Remote electronic cable lengths: 10 m (32.8 ft). Only available with Housing options Q2A and Q2B	**Y12**
Customer specific adjustment (unit value, 100 % distance from seal, 0 % distance from seal)	**Y20**
Cleaning included certificate: oil, grease and silicone free	**W01**
Identification Label (measurement loop) stainless steel, 40 characters max, add in plain text. To add more than one line use a coma "," for line break.	**Y17**
Identification Label (measurement loop) foil, 40 characters max, add in plain text. To add more than one line use a coma "," for line break.	**Y18**
Material Inspection certificate 3.1 of EN 10204	**C05**
3.1-Inspection Certificate for instrument (EN 10204)[27)]	**C12**
Inspection certificate 3.1 (EN 10204, NACE MR 0175) - material.[27)] Note: 316L probes include NACE MR 0175 and MR 0103, non 316L probes include MR 0175 only and plated flange designs are not available with NACE certificate.	**D07**
3.1-Inspection Certificate for instrument with test data (EN 10204)[27)]	**C25**
2.2-Factory certificate for material (EN 10204)[27)]	**C15**
Quality and test plan[27)]	**C26**
Dye penetration test, results confirmed via a 3.1 certificate/instrument (EN10204)[27)]	**C13**
X-ray test + 3.1 certificate/instrument[27)]	**C14**
Positive material identification test + 3.1 certificate/instrument[27)]	**C16**
Roughness test + 3.1 certificate/ instrument[27)]	**C18**
Pressure test + 3.1 certificate/instrument[27)]	**C31**
Helium leak test + 3.1 certificate/ instrument[27)]	**C32**
Pressure test according to Norsok + 3.1 certificate/instrument[27)33)]	**C61**
5 point calibration certificate (min. length 500 mm)[27)]	**C62**
Pressure test (acc. to ASME B31.1), incl. 3.1 Inspection certificate[28)]	**C63**
Certificate: Approval for steam boiler according to EN 12952-11, EN 12953-9[29)]	**C70**

© Siemens 2020

Selection and ordering data	Order code
Operating Instructions	
All literature is available to download for free, in a range of languages, at	
http://www.siemens.com/processinstrumentation/documentation	
Accessories	
SITRANS LG, GWR sensor Display Module	**A5E34143449**
SITRANS LG, two-wire 4 ... 20 mA/HART electronic	**A5E35637821**
SITRANS LG, USB communicator	**A5E35192015**
SITRANS LG, Mounting eye M12 x 20	**PBD:51041448**
SITRANS LG, Mounting spring	**PBD:51041449**
Siemens Intrinsically Safe Barrier (DC powered), ATEX II 1 G EEx ia	**7NG4124-0AA00**
SITRANS RD100, loop powered display - see Chapter 7	**7ML5741-.....-.**
SITRANS RD150, remote digital display for 4 ... 20 mA and HART devices - see Chapter 7	**7ML5742-.....-....**
SITRANS RD200, universal input display with Modbus conversion - see Chapter 7	**7ML5740-.....-..**
SITRANS RD300, dual line display with totalizer and linearization curve and Modbus conversion - see Chapter 7	**7ML5744-.....-..**
For applicable back up point level switch - see point level measurement section	

Note: some configuration options are not available.
For restriction information see the online PIA configuration tool.

1) Not available with Version/Material options E, F, G, J, and K.
2) Available only with certain Electronic options.
3) Not available with Seal/Process temperature option D.
4) Not available with Stainless Steel (electropolished) Housing/Protection/Cable options and certain glands.
5) Available only with Supplementary electronic option A00.
6) Not available with Indicating/adjusting module E02.
7) Not available with Plastic and Stainless Steel (electropolished) Housing/Protection/Cable options and certain glands.
8) Available only with Double chamber, Metallic Housing/Protection/Cable options and certain glands.
9) Available only with Version/Material options A, B, C, D, and H.
10) Not available with Remote and Stainless Steel (electropolished) Housing/Protection/Cable options and certain glands.
11) Available only with Single chamber, Aluminum and Stainless steel (precision casting) Housing/Protection/Cable options.
12) Available only with Housing/Protection/Cable options N, P, V, and Q2A.
13) Not available with Housing/Protection/Cable options W, X, Y, and J.
14) Available only with Housing/Protection/Cable options C, E, L, Q.
15) Not available with Seal/Process temperature option C.
16) Available only with Dimensions centering weight option B00.
17) Available only with Rod mounted option C00.
18) Not available with Dimensions centering weight option B00.
19) Not available with Rod mounted option C00.
20) Not available with Seal/Process temperature options C and D.
21) Not available with Remote Housing/Protection/Cable options.
22) Not available with Seal/Process temperature options B and D.
23) Available only with Seal/Process temperature option D.
24) Available only with Seal/Process temperature options A, B, and C.
25) Not available with Order code Y02.
26) Accuracy is application dependent, please consult factory.
27) Listed Certificates are not available with all configurations, please contact factory for more information.
28) Available only with ASME Process fitting/Material options.
29) Available with Version/Material options G, L, M and Electronic options 2 and 6.
30) Available only with Alloy C22 Process fitting/Material options.
31) Available only with Version/Material option M.
32) Available only with some Version/Material options.
33) Available only with Norsok Process fitting options.
34) Available only with Seal/Second line of defense/Process temperature options A and B.
35) Available only with 316L probe Version/material options. Nace not available with coated, plated, or hygienic connections.

Note: Please consult manual for further details.

© Siemens 2020

Selection and ordering data

	Article No.
SITRANS LG Remote Interface ↗	**7ML5840-**
Provides remote display and configuration for SITRANS LG series guided radar level transmitters.	■■■■■ - ■■■■ 0
↗ Click on the Article No. for the online configuration in the PIA Life Cycle Portal.	
Note: for installation of remote display, 7ML5840, with LG two chamber housing options, contact PVC	
Approval	
For Ex-free area	0 A
ATEX II 1G, 2G, Ex ia IIC T6 Ga, Gb	0 C
ATEX II 2G, Ex d IIC T6 Gb[1]	0 E
IEC Ex ia IIC T6 Ga, Gb	0 F
IEC Ex d IIC T6 Gb[1]	0 G
$_{C}CSA_{US}$ (NI) Class I, Div. 2, Groups A, B, C, D; (DIP) Class II, III, Div. 1, Groups E, F, G	0 H
$_{C}CSA_{US}$ (IS) Class I, II, III, Div. 1, Groups A, B, C, D, E, F, G	0 J
$_{C}CSA_{US}$ (XP) Class I, Div. 1, Groups A, B, C, D[1]	0 K
INMETRO Ex ia IIC T6 Ga, Gb	0 L
INMETRO Ex d IIC T6 Gb[1]	0 M
Shipping Approval (DNV/GL)[6]	0 N
ATEX II 1G, 2G Ex ia IIC T6 Ga, Gb + Ship approval	0 P
ATEX II 2G Ex db IIC T6 Gb + Ship approval[1]	0 Q
IEC Ex ia IIC T6 Ga, Gb + Ship approval	0 R
IEC Ex db IIC T6 Gb + Ship approval[1]	0 S
$_{c}CSA_{us}$ (IS) Class I, II, III, Div. 1, Groups A, B, C, D, E, F, G + Ship approval	0 T
$_{c}CSA_{us}$ (XP) Class I, Div. 1, Groups A, B, C, D + Ship approval[1]	0 U
Electronics	
Digital (I²C communication)	A
Housing	
Plastic[2)4)]	0
Aluminum[3)5)]	1
Stainless Steel (precision casting)[3)5)]	2
Housing protection	
IP66/IP67 NEMA 4X	0
IP66/IP68 NEMA 6P (0.2 bar)	1
Cable entry	
M20 x 1.5/ Blind plug	3
½" NPT/ Blind plug	5
Display	
Without	A
Mounted	B
Mounting	
For wall mounting with Aluminum or stainless steel housing	A
For carrier rail and wall mounting with plastic housing	B
For carrier rail with Aluminum or stainless steel housing	C
For tube mounting (29 ... 60 mm) including mounting material	D
Certificates	
None	0
3.1 Certificate/Instrument with test data	1
Quality and Test plan	2

	Article No.
SITRANS LG Replacement Probes ↗	**7ML5841-**
For use with SITRANS LG series guided radar level transmitters.	■■■■■ - ■■■ 0
↗ Click on the Article No. for the online configuration in the PIA Life Cycle Portal.	
Instrument	
LG240[4)]	0
LG250[6)]	1
LG260[7)]	2
LG270[9)10)]	3
Probe Type[3)]	
Exchangeable cable ø 2 mm with gravity weight/316[1)11)]	A A
Exchangeable cable ø 2 mm center weight/316[2)11)]	A C
Exchangeable cable ø 4 mm without weight/316[1)11)]	A D
Exchangeable cable ø 4 mm with gravity weight/316[1)11)]	A E
Exchangeable cable ø 4 mm with center weight/316[2)11)]	A G
Exchangeable cable ø 6 mm with gravity weight/316[1)8)11)]	A H
Exchangeable rod ø 8 mm/316L[1)]	A P
Exchangeable rod ø 8 mm/1.4435 (acc. to Basle Standard)[1)]	A Q
Exchangeable rod ø 12 mm/316L[1)]	A U
Exchangeable rod ø 16 mm/316L[1)]	A W
Exchangeable coated cable ø4 mm with uncoated centering weight / PFA and 316[11)12)]	B A
Process fitting	
Thread less than or equal to 1½ inch	0
Thread greater than or equal to 2 inch	1
Flange less than DN 50 or 2 inch	2
Flange greater or equal to DN 50 or 2 inch or hygienic fitting (not for safety ingold 25 x 46 mm)	3
Dimension centering weight	
Without	0
ø 40 mm/30 mm	1
ø 45 mm/30 mm (for 2 inch tubes)	2
ø 75 mm/30 mm (for 3 inch tubes)	3
ø 95 mm/30 mm (for 4 inch tubes)	4
ø 1.57 inch/1.18 inch (for 2 inch Schedule 160)	5
ø 1.77 inch/1.18 inch (for 2 inch Schedule 40/80)	6
ø 2.95 inch/1.18 inch (for 3 inch Schedule 10/40)	7
ø 3.74 inch/1.18 inch (for 4 inch Schedule 80)	8
Certificates	
Without	0
2.2 Material certificate	1
3.1 Material certificate	2

1) Available only with Housing options 1 and 2.
2) Available only with Housing option 0.
3) Available only with Housing option 1.
4) Available only with Mounting options B and D.
5) Not available with Mounting option B.
6) Shipping approval is only available with housing options 0 and 1.

© Siemens 2020

Selection and ordering data

	Article No.
SITRANS LG Replacement Probes For use with SITRANS LG series guided radar level transmitters.	**7ML5841-** ■■■■■ - ■■■ **0**
Lengths	
Rod ø 8 mm	
300 ... 1 000 mm (11.81 ... 39.37 inch)	**A A**
1 001 ... 2 000 mm (39.41 ... 78.74 inch)	**A B**
2 001 ... 3 000 mm (78.78 ... 118.11 inch)	**A C**
3 001 ... 4 000 mm (118.15 ... 157.48 inch)	**A D**
4 001 ... 5 000 mm (157.52 ... 196.85 inch)	**A E**
5 001 ... 6 000 mm (196.89 ... 236.22 inch)	**A F**
Rod ø 12 mm	
300 ... 1 000 mm (11.81 ... 39.37 inch)	**A G**
1 001 ... 2 000 mm (39.41 ... 78.74 inch)	**A H**
2 001 ... 3 000 mm (78.78 ... 118.11 inch)	**A J**
3 001 ... 4 000 mm (118.15 ... 157.48 inch)	**A K**
4 001 ... 5 000 mm (157.52 ... 196.85 inch)	**A L**
5 001 ... 6 000 mm (196.89 ... 236.22 inch)	**A M**
Rod ø 16 mm	
300 ... 1 000 mm (11.81 ... 39.37 inch)	**A N**
1 001 ... 2 000 mm (39.41 ... 78.74 inch)	**A P**
2 001 ... 3 000 mm (78.78 ... 118.11 inch)	**A Q**
3 001 ... 4 000 mm (118.15 ... 157.48 inch)	**A R**
4 001 ... 5 000 mm (157.52 ... 196.85 inch)	**A S**
5 001 ... 6 000 mm (196.89 ... 236.22 inch)	**A T**
Cable Lengths ø 2 mm and 4 mm/316	
501 ... 1 000 mm (19.72 ... 39.37 inch)	**A U**
1 001 ... 5 000 mm (39.41 ... 196.85 inch)	**A V**
5 000 ... 10 000 mm (196.85 ... 393.70 inch)	**A W**
10 001 ... 15 000 mm (393.74 ... 590.55 inch)	**A X**
15 001 ... 20 000 mm (590.59 ... 787.40 inch)	**A Y**
20 001 ... 25 000 mm (787.44 ... 984.25 inch)	**B A**
25 001 ... 30 000 mm (984.29 ... 1 181.10 inch)	**B B**
30 001 ... 35 000 mm (1 181.14 ... 1 377.95 inch)	**B C**
35 001 ... 40 000 mm (1 377.99 ... 1 574.80 inch)	**B D**
40 001 ... 45 000 mm (1 574.84 ... 1 771.65 inch)	**B E**
45 001 ... 50 000 mm (1 771.69 ... 1 968.50 inch)	**B F**
50 001 ... 55 000 mm (1 968.54 ... 2 165.35 inch)	**B G**
55 001 ... 60 000 mm (2 165.39 ... 2 362.20 inch)	**B H**
60 001 ... 65 000 mm (2 362.24 ... 2 559.06 inch)	**B J**
65 001 ... 70 000 mm (2 559.09 ... 2 755.91 inch)	**B K**
70 001 ... 75 000 mm (2 755.94 ... 2 952.76 inch)	**B L**

	Article No.
SITRANS LG Replacement Probes For use with SITRANS LG series guided radar level transmitters.	**7ML5841-** ■■■■■ - ■■■ **0**
Cable Lengths ø 6 mm/316	
501 ... 1 000 mm (19.72 ... 39.37 inch)	**B M**
1 001 ... 5 000 mm (39.41 ... 196.85 inch)	**B N**
5 000 ... 10 000 mm (196.89 ... 393.70 inch)	**B P**
10 001 ... 15 000 mm (393.74 ... 590.55 inch)	**B Q**
15 001 ... 20 000 mm (590.59 ... 787.40 inch)	**B R**
20 001 ... 25 000 mm (787.44 ... 984.25 inch)	**B S**
25 001 ... 30 000 mm (984.29 ... 1 181.10 inch)	**B T**
30 001 ... 35 000 mm (1 181.14 ... 1 377.95 inch)	**B U**
35 001 ... 40 000 mm (1 377.99 ... 1 574.80 inch)	**B V**
40 001 ... 45 000 mm (1 574.84 ... 1 771.65 inch)	**B W**
45 001 ... 50 000 mm (1 771.69 ... 1 968.50 inch)	**B X**
50 001 ... 55 000 mm (1 968.54 ... 2 165.35 inch)	**B Y**
55 001 ... 60 000 mm (2 165.39 ... 2 362.20 inch)	**C A**
60 001 ... 65 000 mm (2 362.24 ... 2 559.06 inch)	**C B**
65 001 ... 70 000 mm (2 559.09 ... 2 755.91 inch)	**C C**
70 001 ... 75 000 mm (2 755.94 ... 2 952.76 inch)	**C D**
Cable Lengths ø 4 mm/316	
300 ... 1 000 mm (12 ... 39.37 inch)	**D A**
1 001 ... 2 000 mm (39.41 ... 78.74 inch)	**D B**
2 001 ... 5 000 mm (78.77 ... 196.85 inch)	**D C**
5 001 ... 10 000 mm (196.89 ... 393.70 inch)	**D D**
10 001 ... 15 000 mm (393.74 ... 590.55 inch)	**D E**
15 001 ... 20 000 mm (590.59 ... 787.40 inch)	**D F**
20 001 ... 25 000 mm (787.44 ... 984.25 inch)	**D G**
25 001 ... 32 000 mm (984.29 ... 1 259.84 inch)	**D H**

Further designs Please add "**-Z**" to Article No. and specify Order code(s).	Order code
Enter the total insertion length in plain text description	**Y01**
Total length: Enter the total length of rigid part (range 100 ... 1 000 mm LG270 limited to 100 mm) (cable versions only)	**Y02**

1) Available only with Dimension centering weight option 0.
2) Available only with Dimension centering weight options 1 ... 8.
3) All Probe types are only available with corresponding Probe lengths.
4) Not available with Probe type options AH, AQ, and AW.
5) Available only with Process fitting options 2 and 3.
6) Not available with Probe type options AQ and AW.
7) Available only with Probe type options AE, AH, and AW.
8) Not available with Process fitting option 2.
9) Available only with Probe type options AA, AC, AE, AG, and AW.
10) Available only with Process fitting options 0 and 3.
11) Not available with certificate options 1 and 2.
12) Available only with Dimension centering weight options 1 ... 4.

© Siemens 2020

Selection and ordering data

	Article No.												
SITRANS LG Spacers ↗	**7ML5842-**												
For use with SITRANS LG series guided radar level transmitters.	■	■	■	■	-	0	0	A	A	0			
↗ Click on the Article No. for the online configuration in the PIA Life Cycle Portal.													
Instrument													
LG240[1]	0												
LG250[2]	1												
LG260[3]	2												
LG270[3]	3												
Version/Material													
Cable ø 4 mm/ PFA[4]		A	A										
Rod ø 8 mm including fastening/ PEEK can be shortened[5]		A	B										
Rod ø 10 mm/ PFA[4]		A	C										
Rod ø 12 mm including fastening/ PEEK can be shortened[5]		A	D										
Rod ø 16 mm, cable with gravity weight, including fastening/ PEEK can be shortened[5][7]		A	E										
Cable ø 2 mm including fastening/ PEEK and 316L		A	F										
Rod ø 16 mm including fastening/ 1.4568 (AISI 631) flexible[8]		A	G										
Rod ø 8 mm including fastening/ PTFE can be shortened[5]		A	H										
Rod ø 12 mm including fastening/ 1.4568 (AISI 631) flexible[6]		A	G										
Tube diameter													
50 mm (2 inch) up to 100 mm (4 inch)				1									
49.2 mm (1.9 inch) up to 56.3 mm (2.2 inch)				2									
66.6 mm (2.6 inch) up to 84.9 mm (3.3 inch)				3									

1) Available only with Version/Material options AA and AC.
2) Available only with Version/Material options AB, AD, AE, AH and AJ.
3) Available only with Version/Material options AE and AG.
4) Available only with Tube Diameter option 1 and LG240.
5) Available only with Tube Diameter options 2 and 3 and LG250.
6) Available only with Tube Diameter option 1 and LG250.
7) Available only with Tube diameter option 1 and LG260 or LG270.
8) Available only with Tube Diameter options 2 and 3 and LG260 or LG270.

© Siemens 2020

Characteristic curves

SITRANS LG240, Ambient temperature/process temperature, standard version

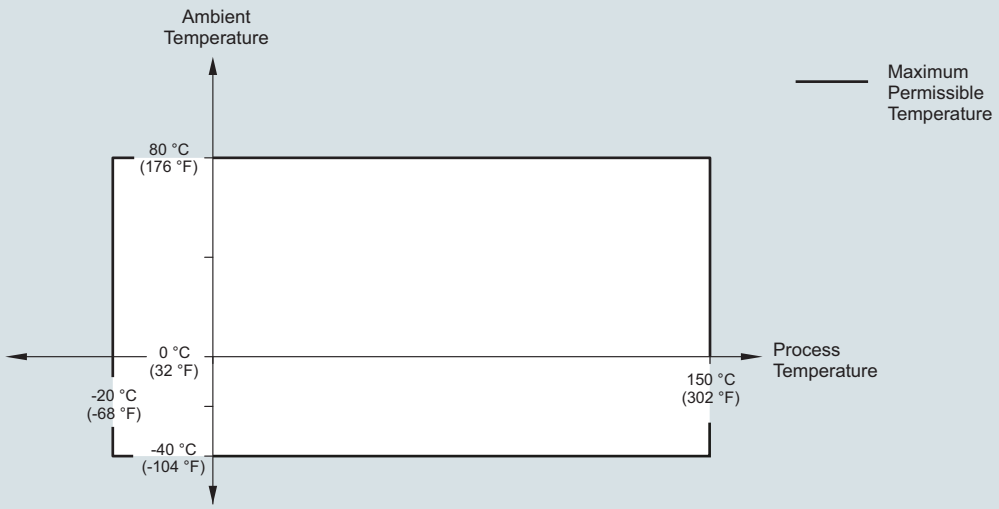

SITRANS LG240, ambient temperature/process temperature curve

© Siemens 2020

Characteristic curves (continued)

SITRANS LG250, Ambient temperature/process temperature, standard version

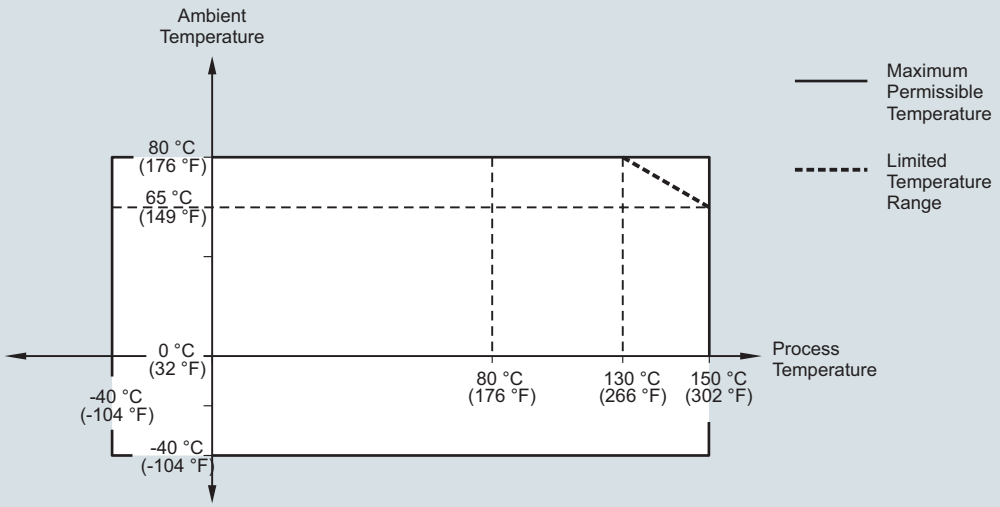

SITRANS LG250, Ambient temperature/process temperature, temperature adapter version

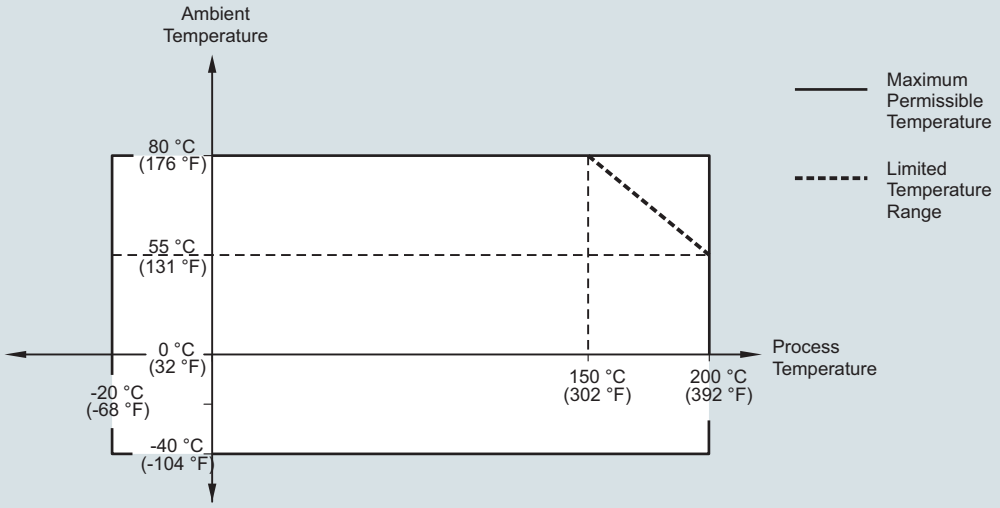

SITRANS LG250, ambient temperature/process temperature curves

© Siemens 2020

Characteristic curves (continued)

SITRANS LG260, Maximum tensile load with cereals and plastic granules - cable: ø 4 mm (0.157 inch)

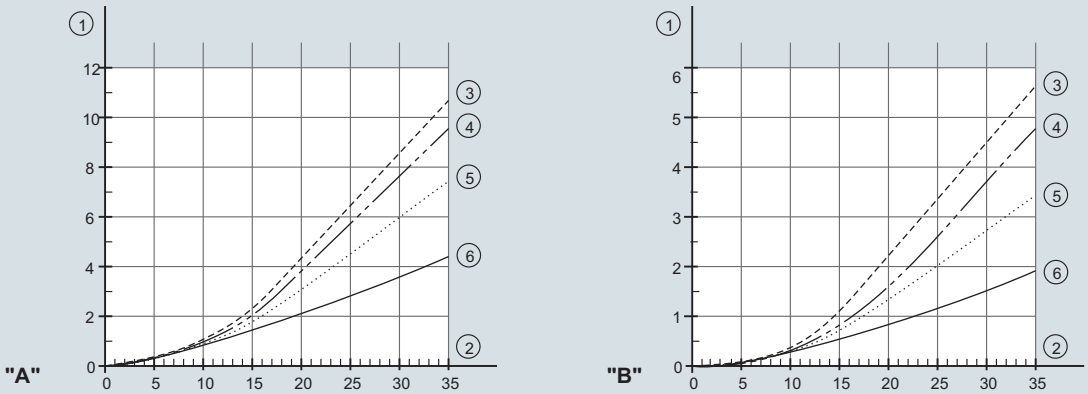

A. Cereals
B. Plastic granules
1. Tensile force in kN (the determined value must be multiplied with safety factor 2)
2. Cable length in m
3. Vessel diameter 12 m (39.37 ft)
4. Vessel diameter 9 m (29.53 ft)
5. Vessel diameter 6 m (19.69 ft)
6. Vessel diameter 3 m (9.843 ft)

SITRANS LG260, Maximum tensile load with sand and cement - cable: ø 4 mm (0.157 inch)

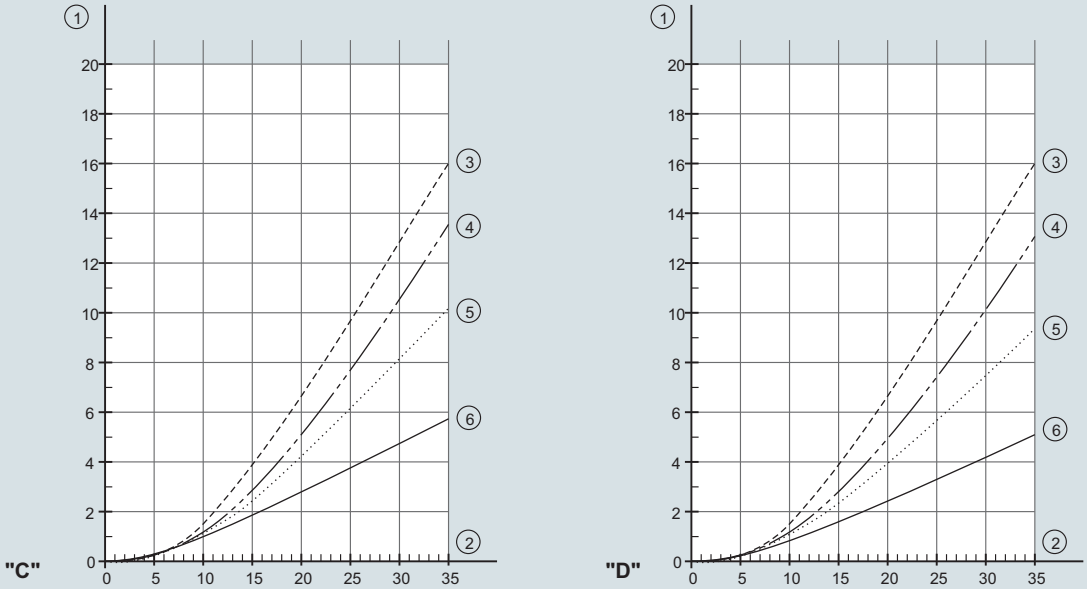

C. Sand
D. Cement
1. Tensile force in kN (the determined value must be multiplied with safety factor 2)
2. Cable length in m
3. Vessel diameter 12 m (39.37 ft)
4. Vessel diameter 9 m (29.53 ft)
5. Vessel diameter 6 m (19.69 ft)
6. Vessel diameter 3 m (9.843 ft)

SITRANS LG260, maximum tensile load curves

© Siemens 2020

Characteristic curves (continued)

SITRANS LG260, Ambient temperature/process temperature, standard version
Cable version with ø 4 mm (0.157 inch)
Cable version, PA coated with ø 6 mm (0.236 inch)

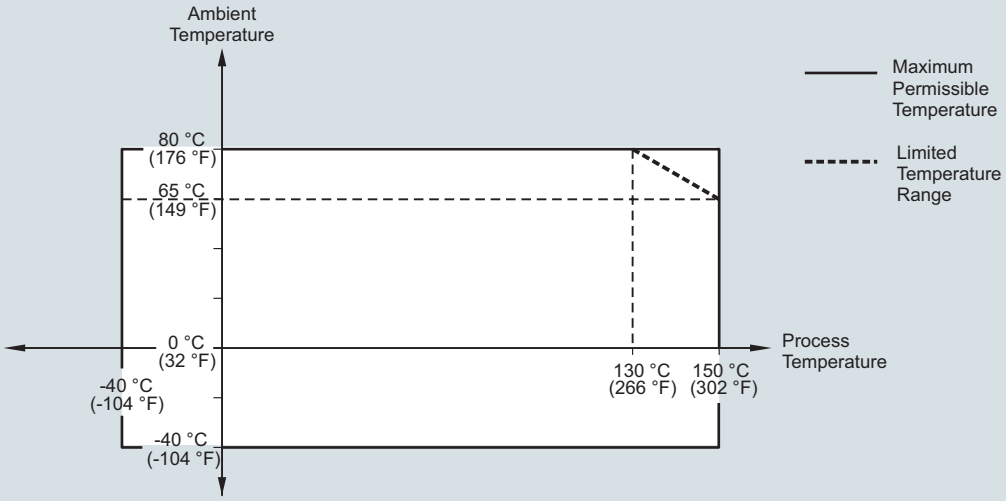

SITRANS LG260, Ambient temperature/process temperature, temperature adapter version
Cable version with ø 4 mm (0.157 inch)
Cable version, PA coated with ø 6 mm (0.236 inch)

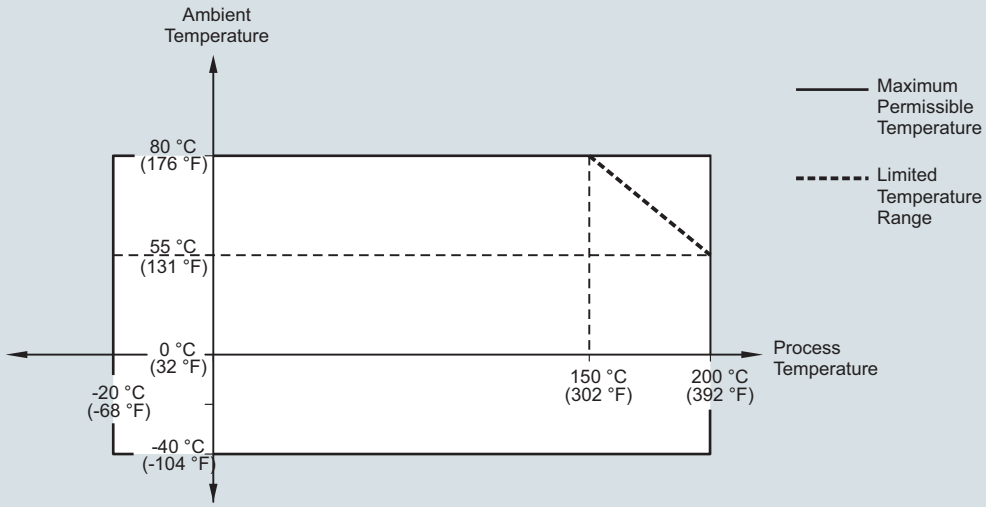

SITRANS LG260, ambient temperature/process temperature curves

© Siemens 2020

Characteristic curves (continued)

SITRANS LG260, Ambient temperature/process temperature, standard version
Cable version with ø 6 mm (0.236 inch)
Cable version, PA coated with ø 11 mm (0.433 inch)

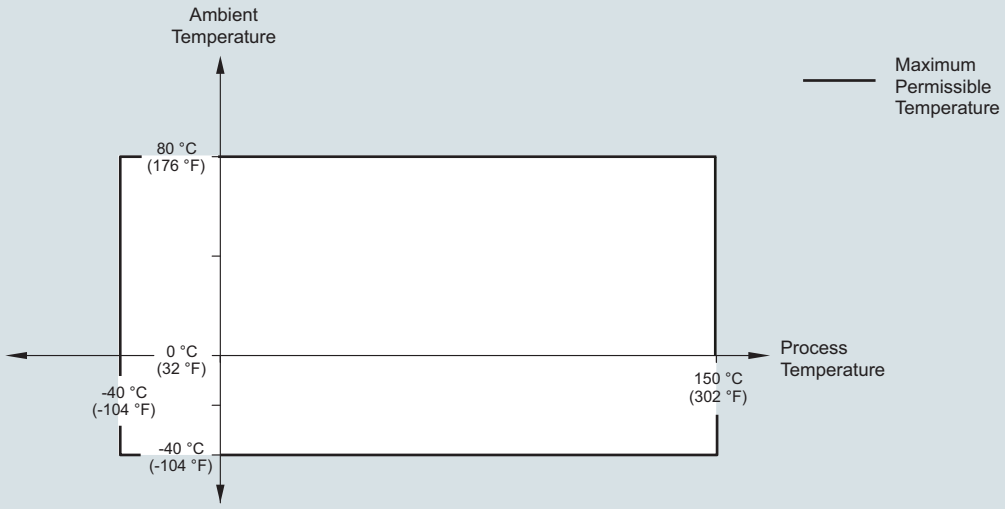

SITRANS LG260, Ambient temperature/process temperature, temperature adapter version
Cable version with ø 6 mm (0.236 inch)
Cable version, PA coated with ø 11 mm (0.433 inch)

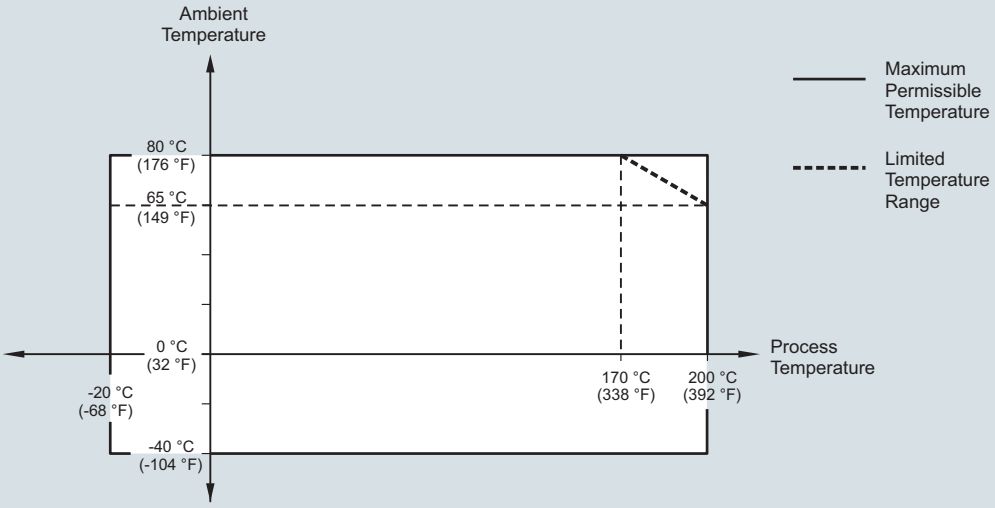

SITRANS LG260, ambient temperature/process temperature curves

© Siemens 2020

Characteristic curves (continued)

SITRANS LG270, Ambient temperature/process temperature (-196 … +280 °C/-321 … +536 °F version)

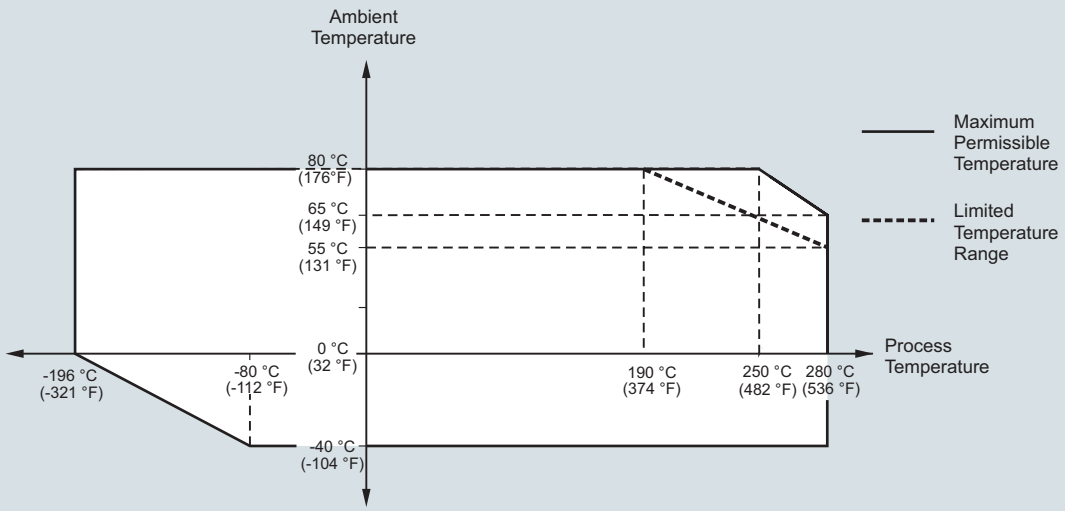

SITRANS LG270, Ambient temperature/process temperature (-196 … +450 °C/-321 … +842 °F version)

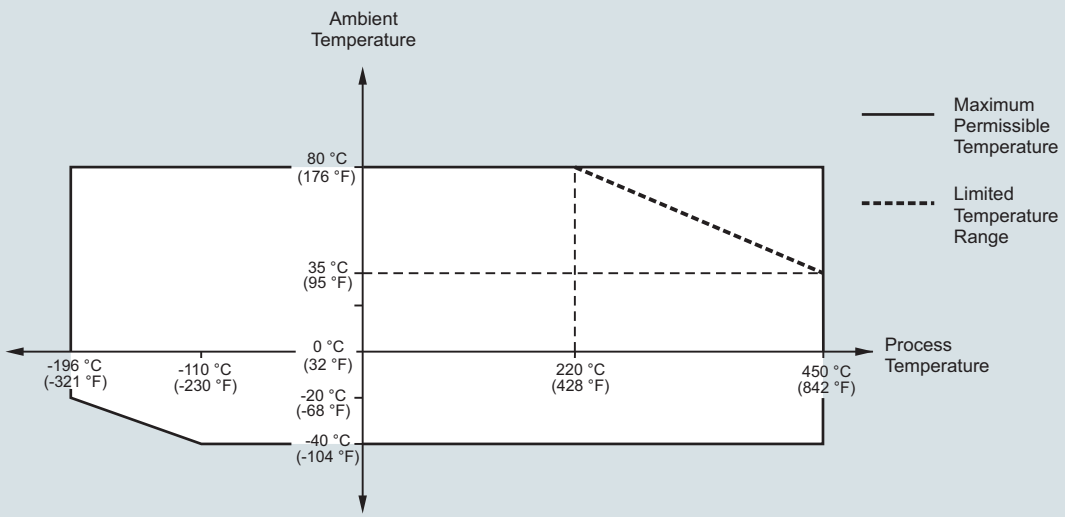

SITRANS LG270, ambient temperature/process temperature curves

© Siemens 2020

Characteristic curves (continued)

SITRANS LG270, Process pressure/process temperature (-196 … +450 °C/-321 … +842 °F version)

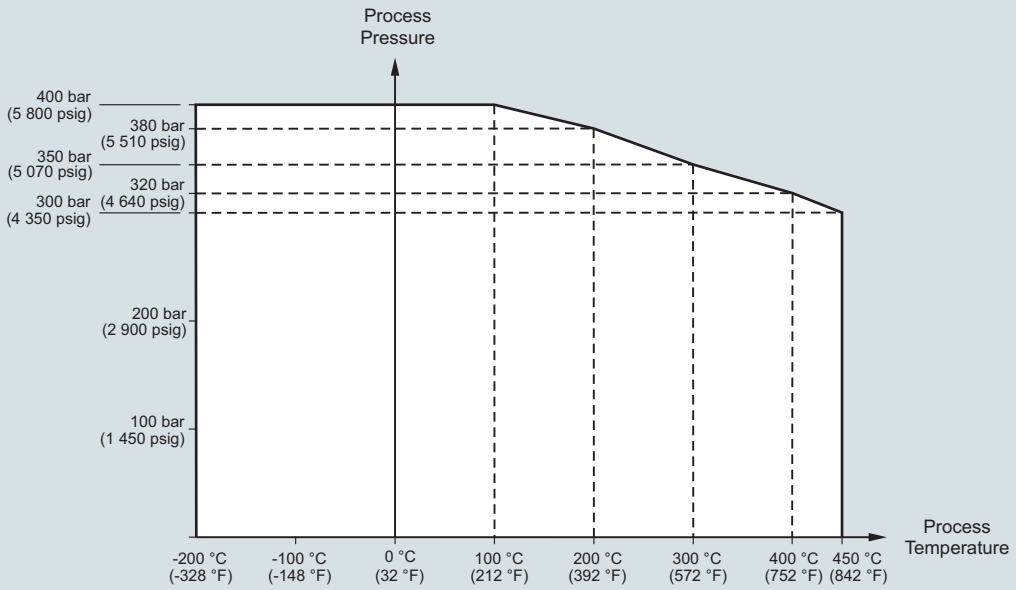

SITRANS LG270, process pressure/process temperature curve

© Siemens 2020

Dimensional drawings

SITRANS LG Series plastic housing

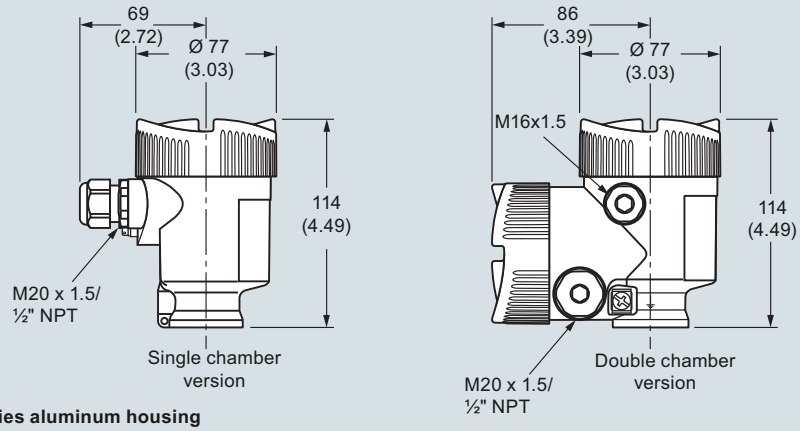

SITRANS LG Series aluminum housing

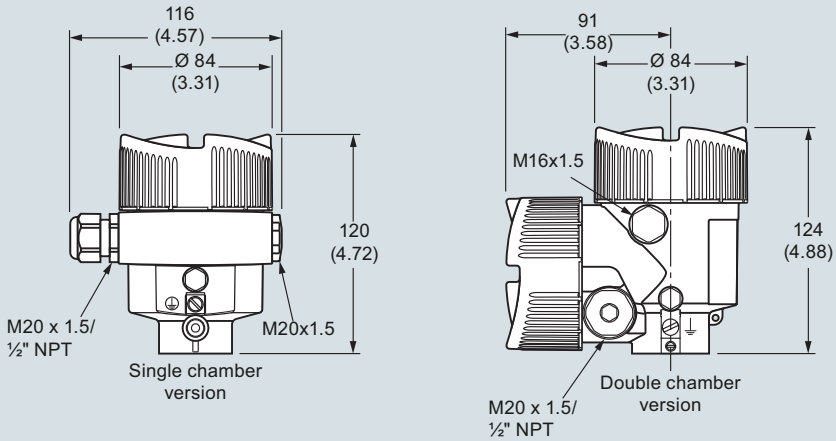

SITRANS LG Series stainless steel housing

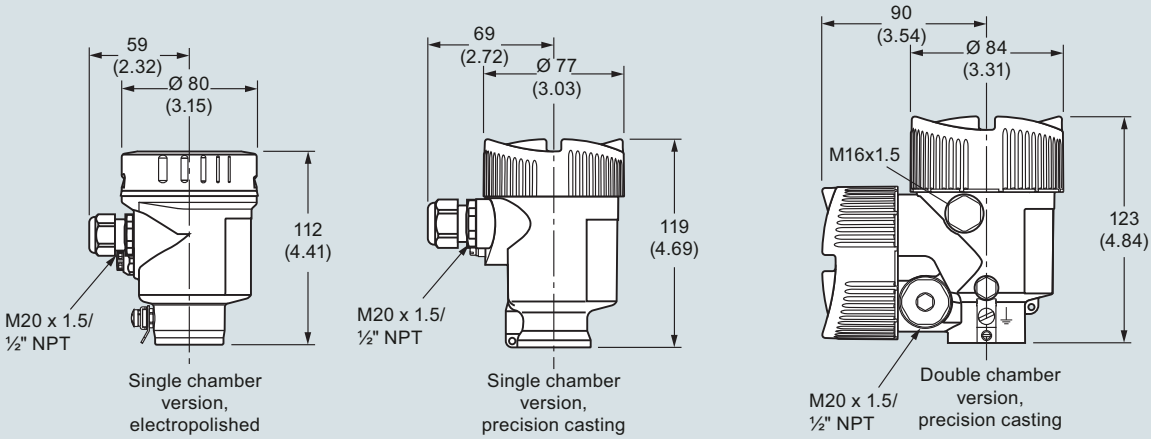

Note: For integrated display and adjustment module the housing is 9 (0.35) higher for all housing options

SITRANS LG series, dimensions in mm (inch)

© Siemens 2020

Dimensional drawings (continued)

SITRANS LG240

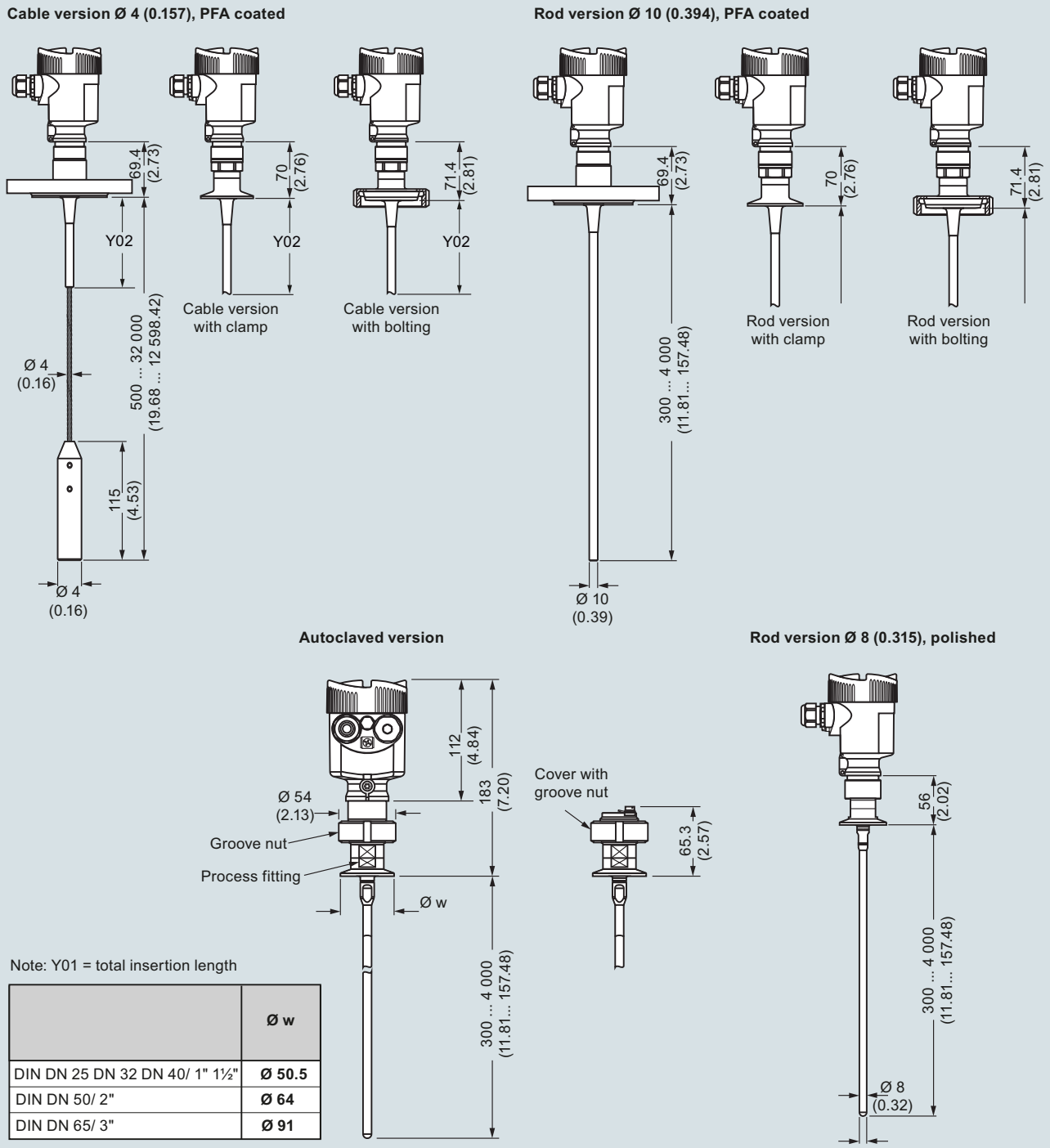

Note: Y01 = total insertion length

	Ø w
DIN DN 25 DN 32 DN 40/ 1" 1½"	**Ø 50.5**
DIN DN 50/ 2"	**Ø 64**
DIN DN 65/ 3"	**Ø 91**

SITRANS LG240, dimensions in mm (inch)

© Siemens 2020

Dimensional drawings (continued)

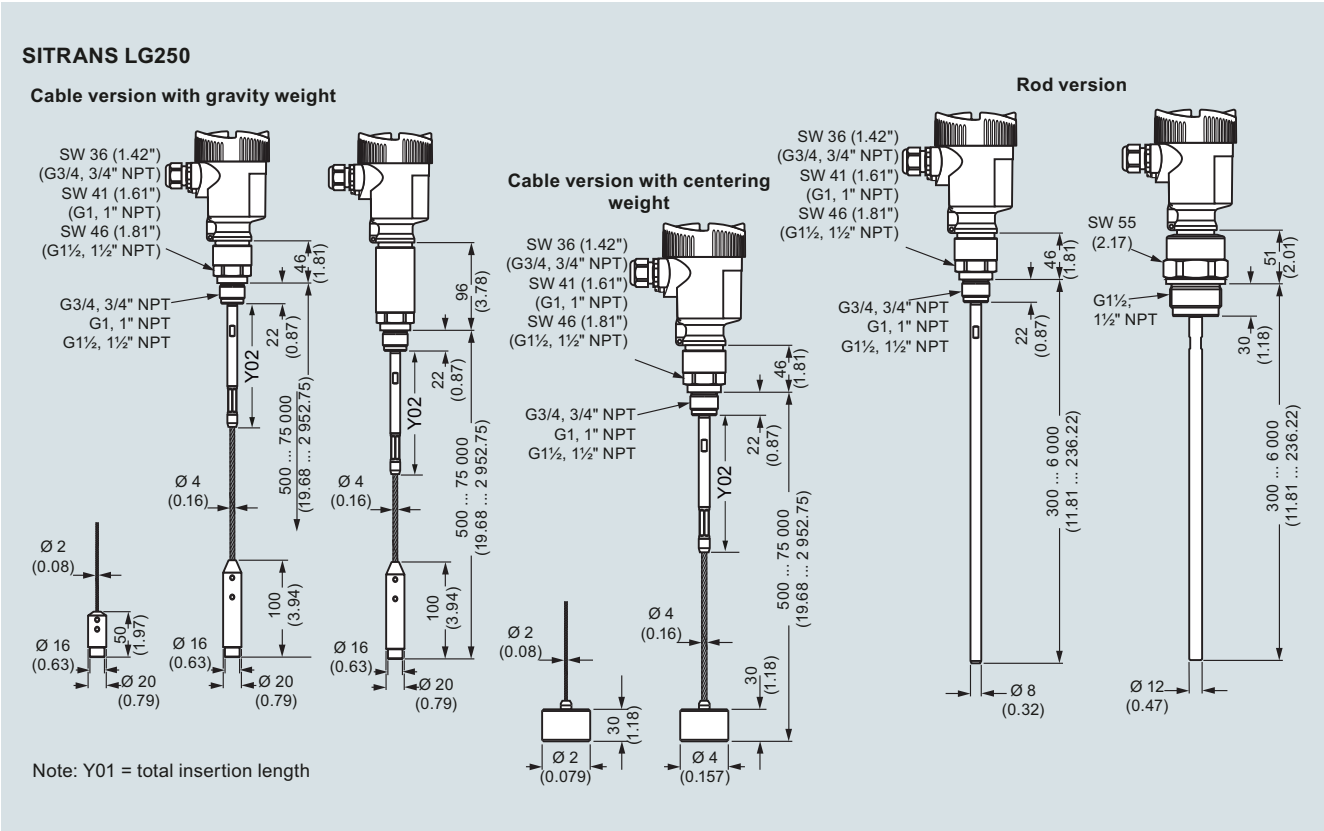

SITRANS LG250, dimensions in mm (inch)

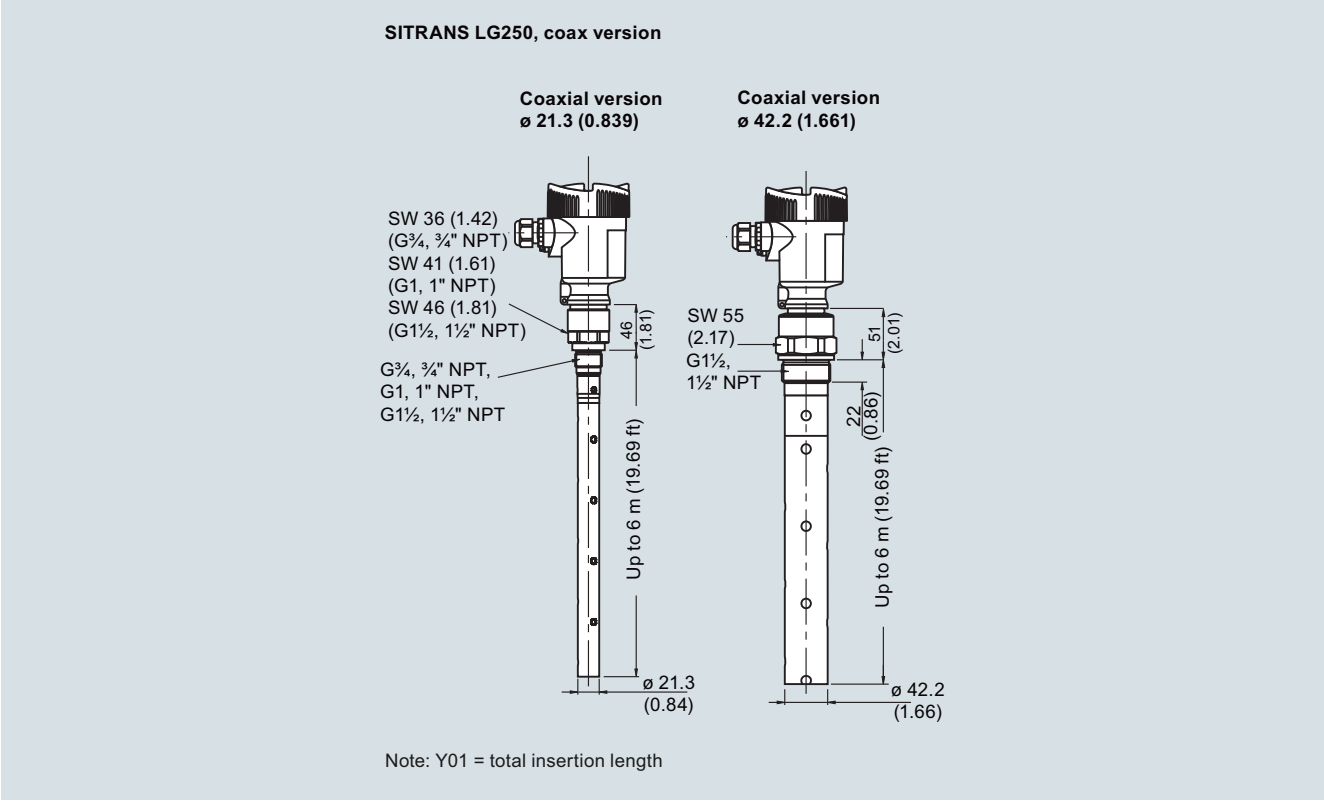

SITRANS LG250, dimensions in mm (inch)

© Siemens 2020

Dimensional drawings (continued)

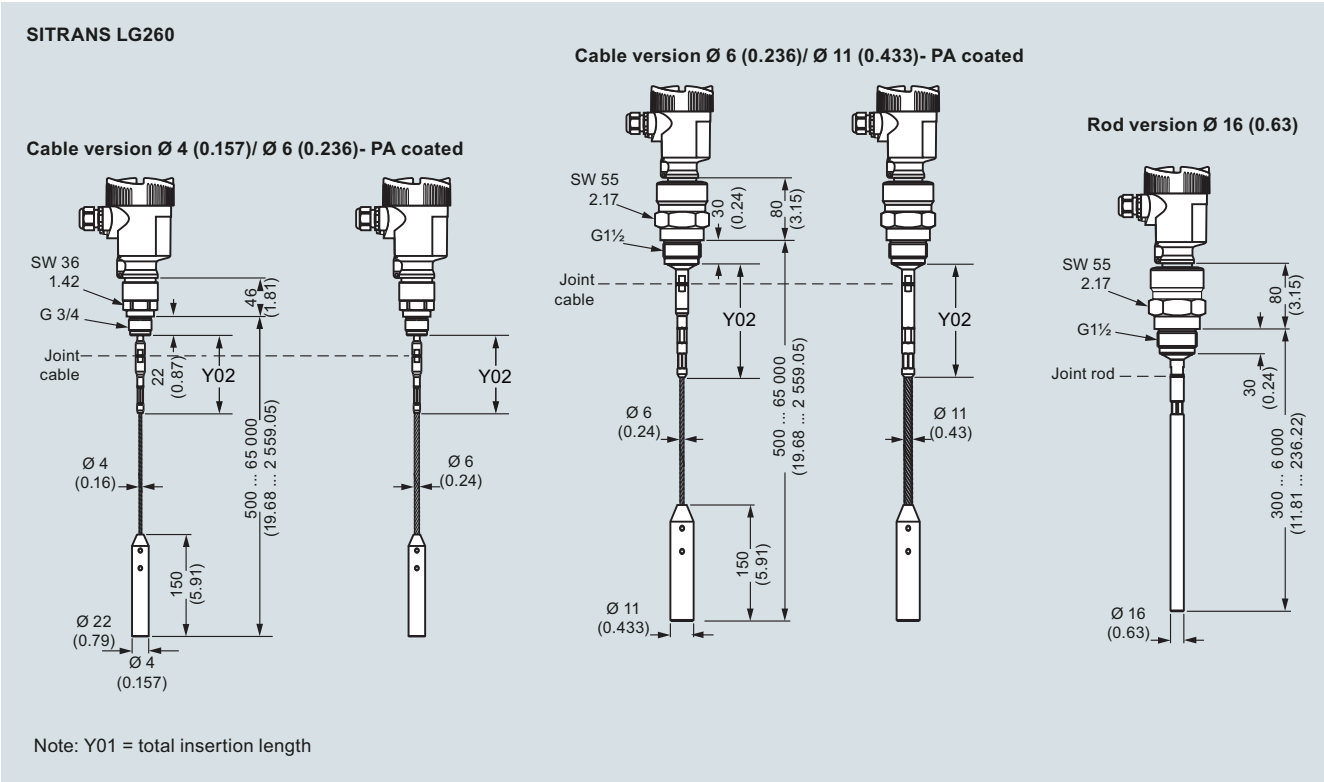

SITRANS LG260, dimensions in mm (inch)

© Siemens 2020

Dimensional drawings (continued)

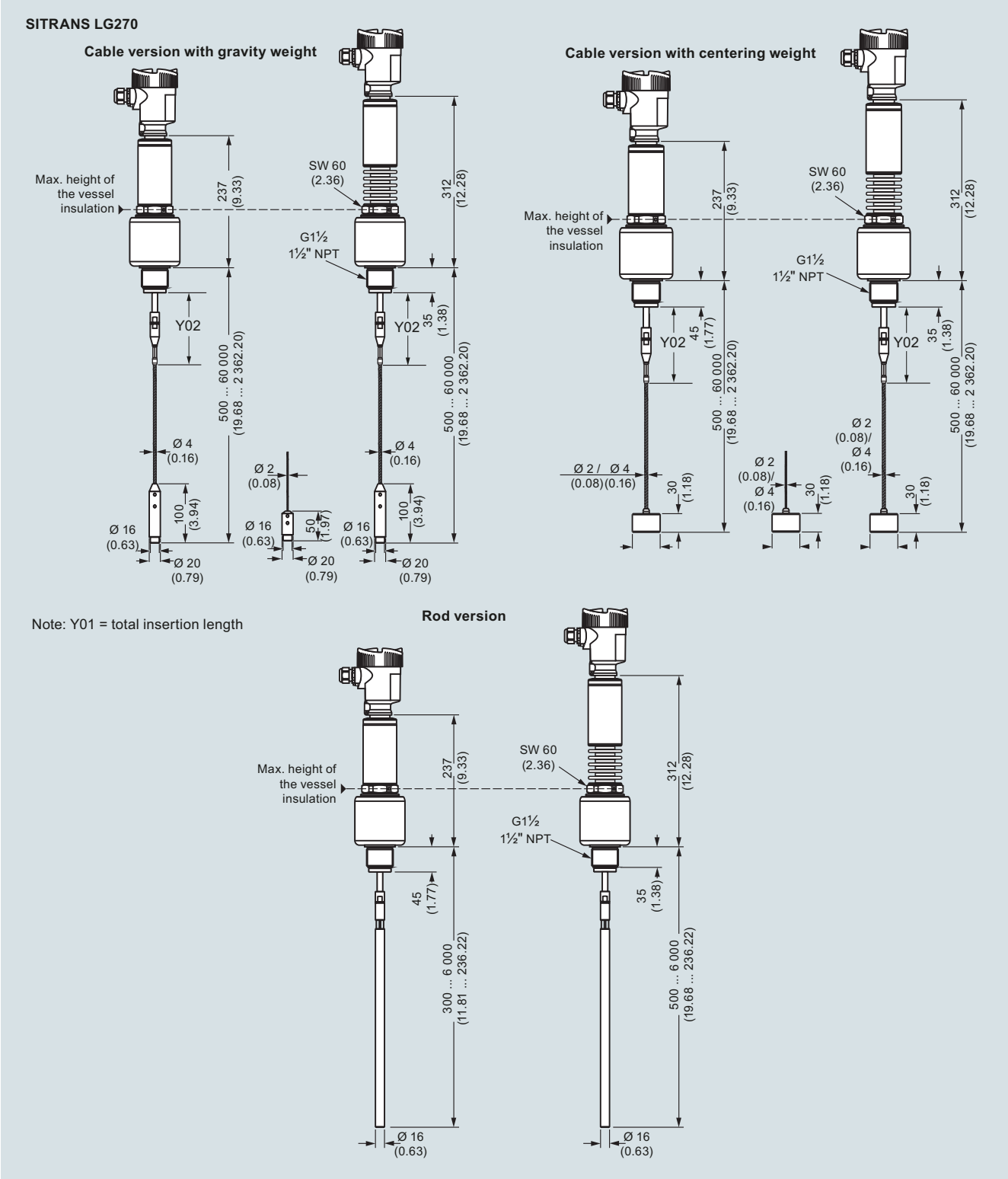

SITRANS LG270, dimensions in mm (inch)

© Siemens 2020

Dimensional drawings (continued)

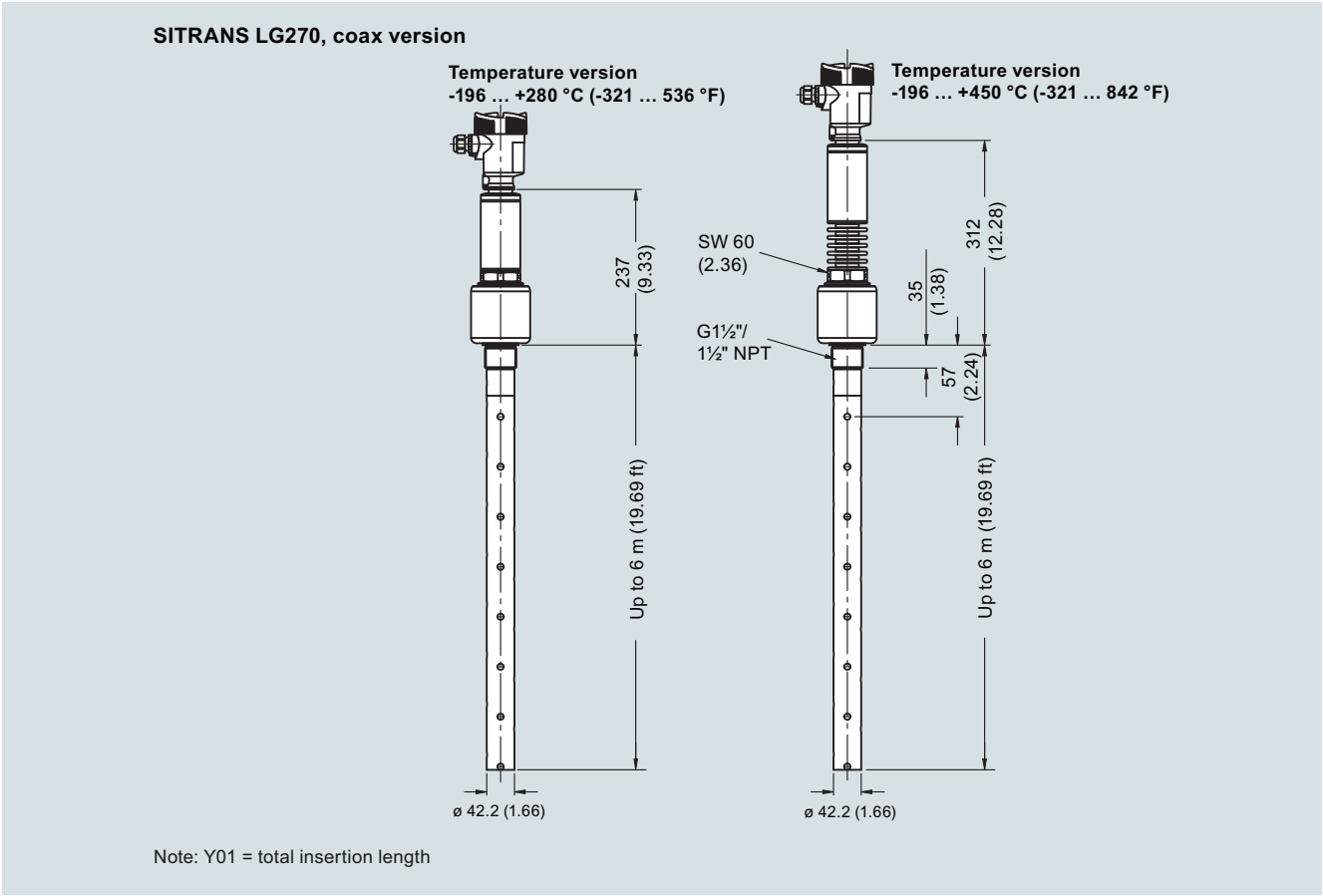

SITRANS LG270, dimensions in mm (inch)

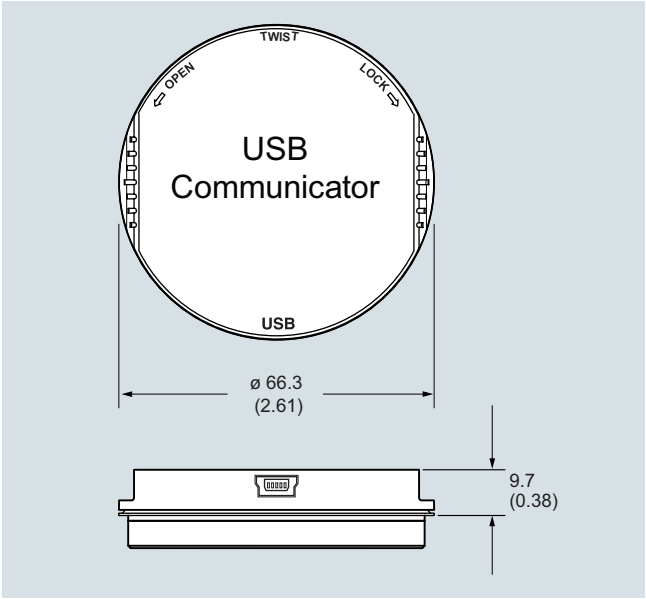

SITRANS LG USB Communicator, dimensions in mm (inch)

© Siemens 2020

Dimensional drawings (continued)

SITRANS LG remote interface, aluminum housing

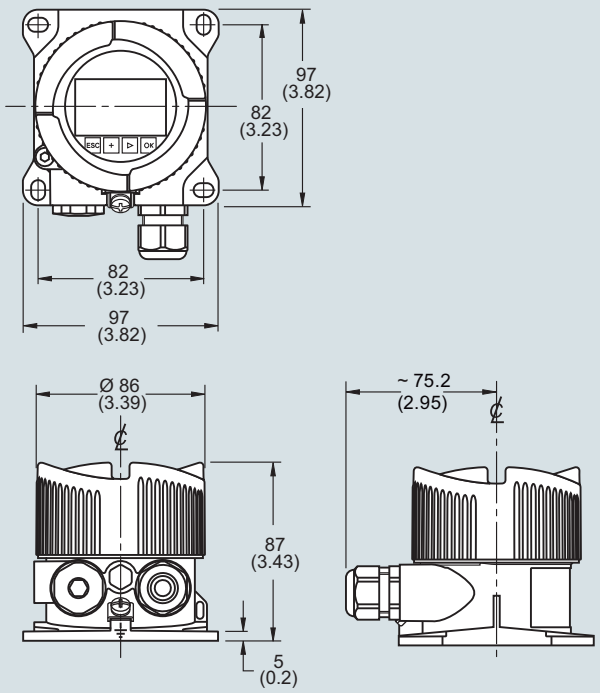

SITRANS LG remote interface, plastic housing

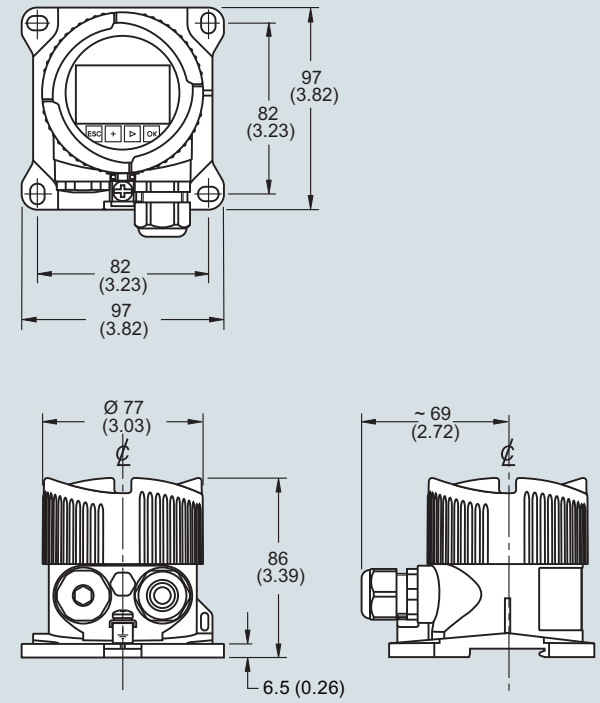

SITRANS LG remote interface, dimensions in mm (inch)

© Siemens 2020

Circuit diagrams

2-wire HART electronic option, electronics and connection compartment, single chamber housing

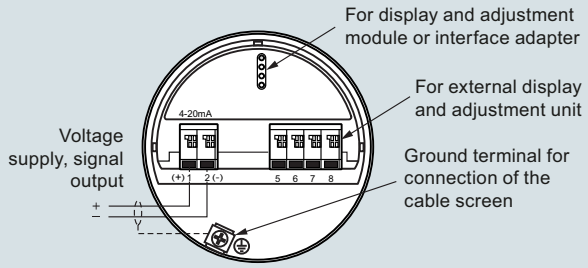

2-wire HART electronic option, electronics compartment, double chamber housing

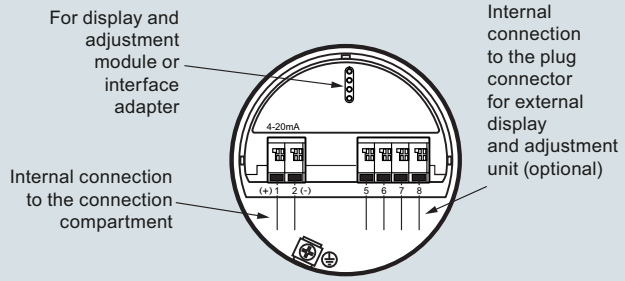

2-wire HART electronic option, connection compartment, Ex-d-ia double chamber housing

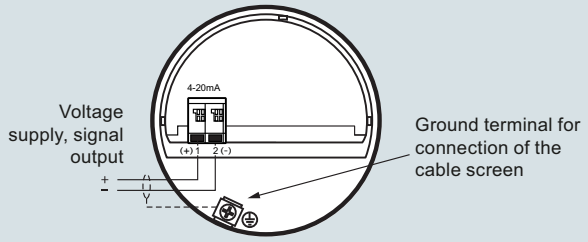

Note: All 2-wire HART connections and electronics are also available with SIL qualification.

SITRANS LG series connections

4-wire HART electronic option, electronics compartment, double chamber housing

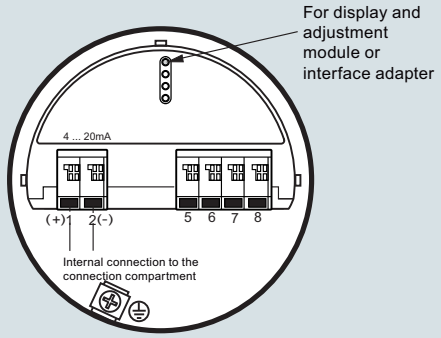

4-wire electronic option, connection compartment, double chamber housing with mains voltage

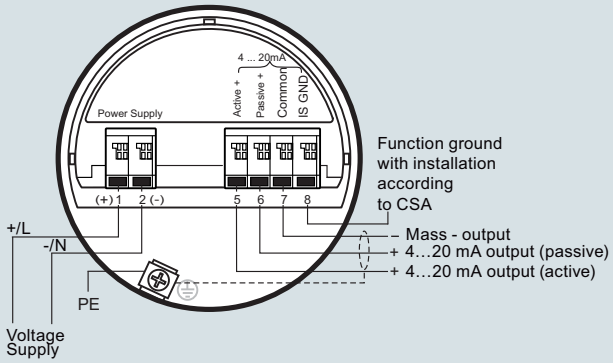

SITRANS LG series connections

© Siemens 2020

Circuit diagrams (continued)

Supplementary electronics

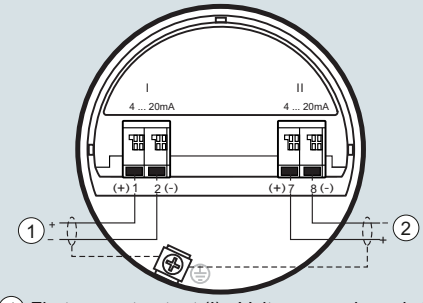

1 First current output (I) - Voltage supply and signal output (HART)
2 Second current output (II) - Voltage supply and signal output (without HART)

Connection compartment with low voltage

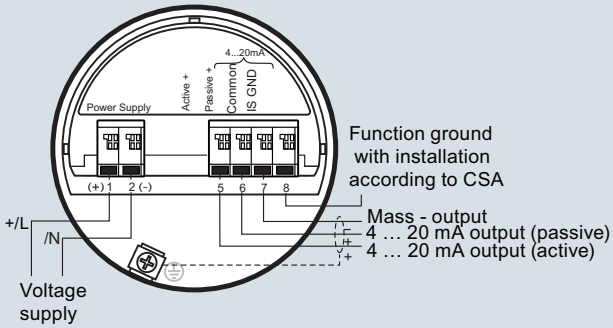

SITRANS LG series connections

Modbus electronic option, connection compartment

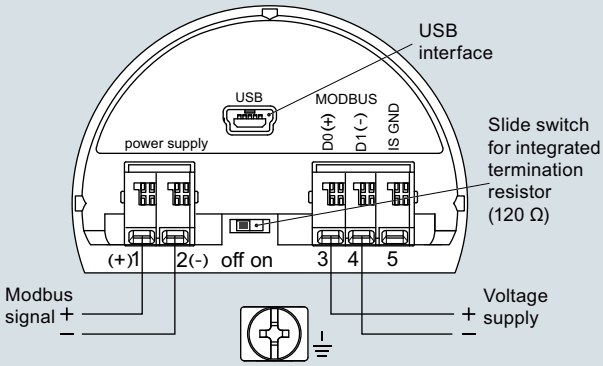

Modbus electronic option, electronics compartment, double chamber housing

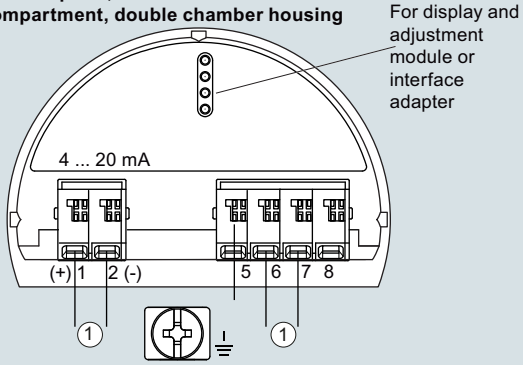

1 Internal connection to the connection compartment

SITRANS LG series connections

PROFIBUS electronic option, connection compartment, double chamber housing

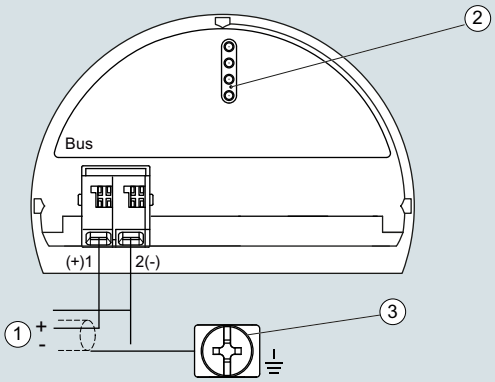

1 Voltage supply, signal output
2 For display and adjustment module or interface adapter
3 Ground terminal for connection of the cable screen

PROFIBUS electronic option, electronics compartment, double chamber housing

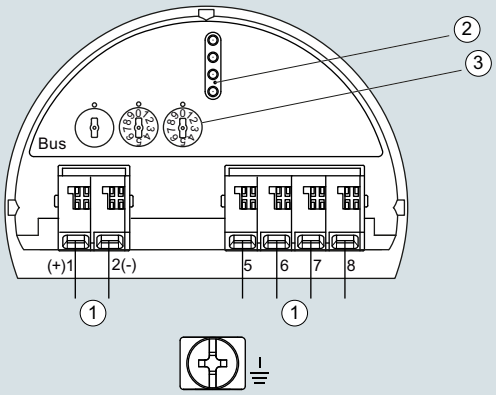

1 Internal connection to the connection compartment
2 Contact pins for the display and adjustment module or interface adapter
3 Selection switch for bus address

LG series connections

© Siemens 2020

Circuit diagrams (continued)

PROFIBUS electronic option, electronics and connection compartment, single chamber housing

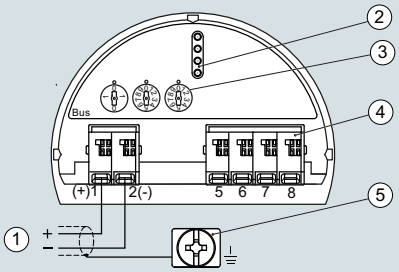

1. Voltage supply, signal output
2. For display and adjustment module or interface adapter
3. Selection switch for bus address
4. For external display and adjustment unit
5. Ground terminal for connection of the cable screen

LG series connections

LG series, FOUNDATION Fieldbus electronic option, electronic and terminal compartment, single chamber housing

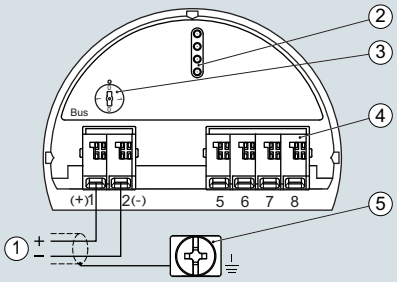

1. Voltage supply, signal output
2. Contact pins for the display and adjustment module or interface adapter
3. Simulation switch ("1" = mode for simulation release)
4. For external display and adjustment unit
5. Ground terminal for connection of the cable screen

LG series connections

LG series, FOUNDATION Fieldbus electronic option, electronic compartment, double chamber housing

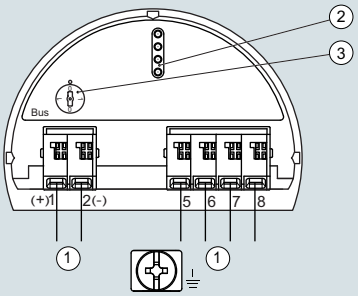

1. Internal connection to the connection compartment
2. Contact pins for the display and adjustment module or interface adapter
3. Simulation switch ("on" = simulation mode)

LG series, FOUNDATION Fieldbus electronic option, terminal compartment, double chamber housing

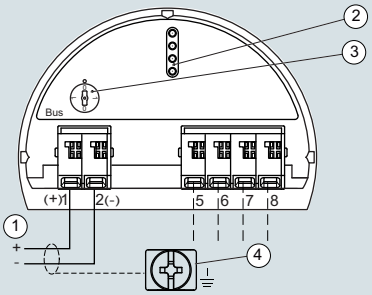

1. Voltage supply, signal output
2. For display and adjustment module or interface adapter
3. For external display and adjustment unit
4. Ground terminal for connection of the cable screen

LG series connections

© Siemens 2020

Overview

SITRANS LC300 is an inverse frequency shift capacitance continuous level transmitter for liquid, interface, and solid applications. It is ideal for standard industrial applications in chemical, hydrocarbon processing, food and beverage, water, wastewater, mining, aggregate, and cement industries.

Benefits

- Active-Shield technology so measurement is unaffected by material buildup in active shield section
- Highly accurate and reliable PFA-lined probes
- Integrated local LCD display
- 2-wire (4 to 20 mA) current loop design
- Current signaling according to NAMUR NE 43
- Push-button calibration and programming
- Stilling well (ground tube) version for low dielectric media, agitated materials, and non-metallic vessels

Application

SITRANS LC300 is a 2-wire level measurement instrument combining a sophisticated, yet easy-to-adjust microprocessor with field-proven probes. It is available in four versions: rod, rod with stilling well, cable with PFA insulation, and cable without PFA insulation.

Materials with low or high dielectric properties are accurately measured and Active-Shield technology helps in ignoring the effects of buildup or condensation near vessel nozzle.

- Key Applications: conductive (dK ≥ 20) and non-conductive (dK < 20) media including: liquids and solids in standard industrial processes, bulk solids applications involving dust, and chemical processes involving vapor

Probe Applications	
Rod version	Conductive liquids, slurries or solids
Rod version with stilling well	• Conductive liquids or slurries in non-conductive tanks • Non-conductive liquids in non-conductive tanks • Tanks with agitation or turbulent liquids • Liquids with a dielectric constant below 2 • Non-linear tanks, such as parabolic or spherical tanks • Interface measurements
Cable version	Non-conductive solids or liquids
PFA coated cable version	Conductive or sticky liquids, slurries or solids

Configuration

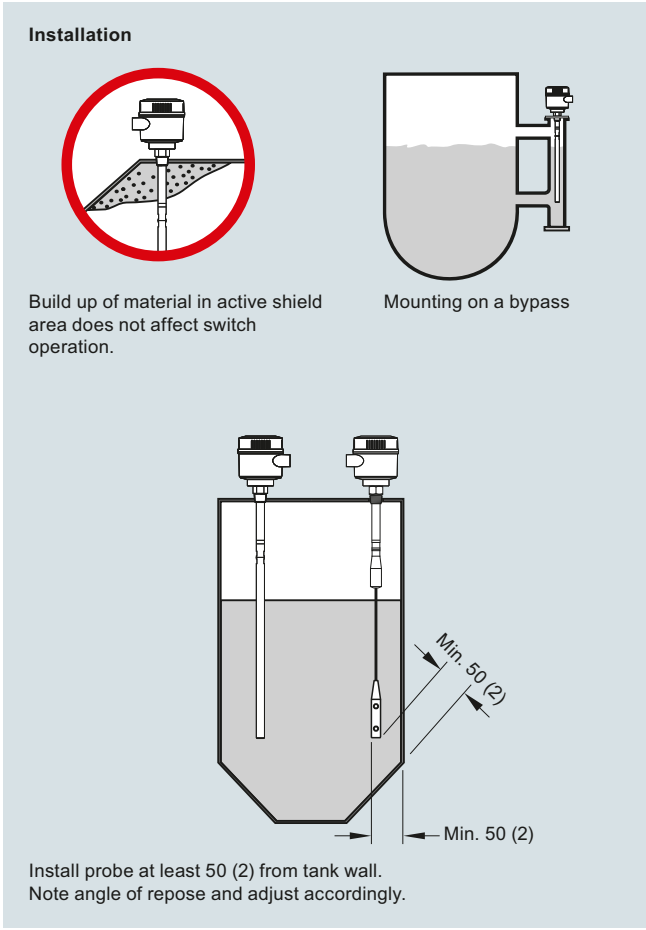

SITRANS LC300 installation, dimensions in mm (inch)

4

© Siemens 2020

Technical specifications

Input	
Measuring range	1.66 ... 3 300 pF
Span	Min. 3.3 pF
Output	
Loop current	Continuous signal 4 ... 20 mA/20 ... 4 mA according to NAMUR 43
Accuracy (transmitter)	
Temperature stability	0.25 % of actual capacitance value
Non-linearity and repeatability	< 0.4 % of full scale and actual measurement value
Accuracy	Deviation < 0.5 % of actual measurement value
Rated operating conditions[1]	
Ambient conditions	
• Ambient temperature	-40 ... +85 °C (-40 ... +185 °F)[2][3]
• Storage temperature	-40 ... +85 °C (-40 ... +185 °F)
• Installation category	I
• Pollution degree	4
• Ingress protection	Type 4/NEMA 4/IP65 (optional IP68)
Installation conditions	
• Location	Indoor/outdoor
• Process pressure	-1 ... +35 bar g (-14.6 ... +511 psi g)
• Process temperature	-40 ... +200 °C (-40 ... +392 °F)[4]
• Min. dielectric constant ε_r	1.5
• Min. difference in dielectric constant for interface measurement	5
Design	
Material	
• Enclosure	Aluminum, epoxy-coated
Probe diameter	
• Rod version	19 mm (0.75 inch) with PFA jacket
• Cable version	9 mm (0.35 inch) with PFA jacket, 6 mm (0.24 inch) without PFA jacket
Active shield length	
• Rod version	Threaded: 120 mm (4.72 inch) Flanged: 100 mm (3.94 inch)
• Cable version	Threaded: 125 mm (4.92 inch) Flanged: 105 mm (4.13 inch)
Process connection of probe	
• Threaded rod mounting	¾",1",1¼", 1½" NPT [(Taper), ANSI/ASME B1.20.1] R ¾",1", 1½" [(BSPT), EN 10226/PT (JIS-T), JIS B 0203] G ¾", 1", 1½" [(BSPP), EN ISO 228-1/PF (JIS-P), JIS B 0202]
• Threaded cable mounting	1½" NPT [(Taper), ANSI/ASME B1.20.1] R 1½" [(BSPT), EN 10226/PT (JIS-T), JIS B 0203] G 1½" [(BSPP), EN ISO 228-1/PF (JIS-P), JIS B 0202]
• Flange mounting	1 ... 4" ASME, DN 25 ... 100
Enclosure cable inlet	2 x ½" NPT or 2 x M20 x 1.5

Power supply	12 ... 30 V DC any polarity, 2-wire current loop circuit
User Interface	
Display	Local LCD, 4 digit, each 0 ... 9 and limited alpha characters
Safety	
Measurement current signaling	According to NAMUR NE 43, signal 3.8 ... 20.5 mA, fault ≤ 3.6 or ≥ 21 mA (22 mA)
Certificates and approvals	
General	CE, $CSA_{US/C}$, FM, RCM, KCC, EAC
Dust Ignition Proof (Intrinsically Safe probe circuit)	
• Canada/USA	FM/CSA: Class II, Div. 1, Groups E, F, G Class III T4
• Europe	ATEX ½ D T100 °C
Flame Proof (Intrinsically Safe probe circuit)	
• Europe	ATEX II ½ G EEx d [ia] IIC T6 ... T1 ATEX II ½ D T100 °C
• Brazil	Ex d [ia Ga] IIC T6 … T4 Gb Ex tb IIIC T85 °C … T100 °C Db IP65/IP68
• Russia/Kazakhstan	EAC Ex
Explosion Proof (Intrinsically Safe probe circuit)	
• Canada/USA	Class I, Div. 1, Groups A, B, C, D Class II, Div. 1, Groups E, F, G Class III T4
Marine	ABS Type Approval, Lloyds Register
Overfill Protection	AIB-Vincotte
Other	Pattern Approval (AQSIQ, China), CRN, PED

1) When operation is in areas classified as hazardous, observe restrictions according to relevant certificate. See also Pressure/Temperature curves on page 5/16.

2) Thermal isolator is used if process connection temperature exceeds 85 °C (185 °F)

3) Minimum voltage of 15 V DC is required for use at -40 °C (-40 °F)

4) Not suitable for steam environments

Design: Probe

	Rod version	Stilling well version	Cable version
Length	Min. 300 mm (12 inch), max. 5 000 mm (197 inch)	Min. 300 mm (12 inch), max. 5 000 mm (197 inch)	Min. 1 000 mm (40 inch), max. 25 000 mm (984 inch)
Sensor wetted parts	PFA, 316L stainless steel	PFA, 316L stainless steel	316L stainless steel or 316L stainless steel with PFA insulation
O-ring seal material	FKM or FFKM	FKM or FFKM	FKM or FFKM
Thermal isolator	Optional	Optional	Optional
Options	N/A	N/A	Mounting eye for PFA insulated cable version

© Siemens 2020

Selection and ordering data

	Article No.
SITRANS LC300 Capacitance level transmitter, rod design ↗	**7ML5670-** ■■■■■-■■■0
Continuous, contact, monitors level or interface in liquids or solids. Extension options up to 5 m (16.40 ft).	
↗ Click on the Article No. for the online configuration in the PIA Life Cycle Portal.	
Process connection	
Threaded, 316L stainless steel	
¾" NPT [(Taper), ANSI/ASME B1.20.1]	0 A
1" NPT [(Taper), ANSI/ASME B1.20.1]	0 B
1¼" NPT [(Taper), ANSI/ASME B1.20.1]	0 C
1½" NPT [(Taper), ANSI/ASME B1.20.1]	0 D
R ¾" [(BSPT), EN 10226/PT (JIS-T), JIS B 0203]	1 A
R 1" [(BSPT), EN 10226/PT (JIS-T), JIS B 0203]	1 B
R 1½" [(BSPT), EN 10226/PT (JIS-T), JIS B 0203]	1 D
G ¾" [(BSPP), EN ISO 228-1/PF (JIS-P), JIS B 0202]	3 A
G 1" [(BSPP), EN ISO 228-1/PF (JIS-P), JIS B 0202]	3 B
G 1½" [(BSPP), EN ISO 228-1/PF (JIS-P), JIS B 0202]	3 D
Welded flange, 316L stainless steel, raised face[1]	
1" ASME, 150 lb	5 A
1" ASME, 300 lb	5 B
1" ASME, 600 lb	5 C
1½" ASME, 150 lb	5 D
1½" ASME, 300 lb	5 E
1½" ASME, 600 lb	5 F
2" ASME, 150 lb	5 G
2" ASME, 300 lb	5 H
2" ASME, 600 lb	5 J
3" ASME, 150 lb	5 K
3" ASME, 300 lb	5 L
3" ASME, 600 lb	5 M
4" ASME, 150 lb	5 N
4" ASME, 300 lb	5 P
4" ASME, 600 lb	5 Q
Welded flange, 316L stainless steel, Type A flat faced[1]	
DN 25, PN 16	6 A
DN 25, PN 40	6 B
DN 40, PN 16	6 C
DN 40, PN 40	6 D
DN 50, PN 16	6 E
DN 50, PN 40	6 F
DN 80, PN 16	6 G
DN 80, PN 40	6 H
DN 100, PN 16	6 J
DN 100, PN 40	6 K
Sanitary, hastelloy, duplex or other custom process connections available. Please contact a local sales person for details. For more information, please visit http://www.automation.siemens.com/aspa_app.	

	Article No.
SITRANS LC300 Capacitance level transmitter, rod design	**7ML5670-** ■■■■■-■■■0
Continuous, contact, monitors level or interface in liquids or solids. Extension options up to 5 m (16.40 ft).	
Probe Length (from flange face or including process thread)	
Add Order code Y01 and plain text: "Insertion length ... mm"	
300 ... 1 000 mm (11.81 ... 39.37 inch)	A
1 001 ... 2 000 mm (39.41 ... 78.74 inch)	B
2 001 ... 3 000 mm (78.78 ... 118.11 inch)	C
3 001 ... 4 000 mm (118.15 ... 157.48 inch)	D
4 001 ... 5 000 mm (157.52 ... 196.85 inch)	E
Bent probes also available. Please contact a local sales person for details. For more information, please visit http://www.automation.siemens.com/aspa_app.	
Thermal isolator	
Without thermal isolator	0
With thermal isolator [for process connection temperatures over 85 °C (185 °F)]	1
Wetted seals	
FKM	0
FFKM [for process temperatures above -20 °C (4 °F)][2]	1
Probe material	
19 mm (0.75 inch) diameter 316L stainless steel, PFA lined rod	0
Approvals	
General Safety (CSA, FM, CE, RCM)	A
Dust Ignition Proof With IS Probe CE, RCM, ATEX II 1/2 D T100 °C	B
Flame Proof Enclosure With IS Probe CE, RCM, ATEX II 1/2 G EEx d [ia] IIC T6 ... T1, ATEX II 1/2 D T100 °C	C
Dust Ignition Proof With IS Probe CSA/FM Class II, Div. 1, Groups E, F, G CSA/FM Class III T4	D
Explosion Proof Enclosure With IS Probe CSA/FM Class I, Div. 1, Groups A, B, C, D CSA/FM Class II, Div. 1, Groups E, F, G CSA/FM Class III T4	E
Enclosure	
Aluminum epoxy coated 2 x ½" NPT via adapter - cable inlet, IP65	A
Aluminum epoxy coated 2 x M20 x 1.5 cable inlet, IP65	B
Aluminum epoxy coated 2 x ½" NPT via adapter - cable inlet, IP68	C
Aluminum epoxy coated 2 x M20 x 1.5 cable inlet, IP68	D
Stainless steel, contact local sales person for details. For more information, please visit http://www.automation.siemens.com/aspa_app	

[1] Flange bolting patterns and facings dimensionally correspond to the applicable ASME B16.5 or EN 1092-1 standard.

[2] Not available with FM approvals.

© Siemens 2020

Selection and ordering data

	Order code
Further designs	
Please add "**-Z**" to Article No. and specify Order code(s).	
Insertion length, specify in plain text: Y01: ... mm	**Y01**
Stainless steel tag [70 x 13 mm (2.75 x 0.5 inch)]: Measuring-point number/identification (max. 27 characters) specify in plain text	**Y15**
Manufacturer's Test Certificate: M to DIN 55350, Part 18 and to ISO 9000	**C11**
Material inspection Certificate Type 3.1 per EN 10204	**C12**
INMETRO[1)]	**E34**
Operating Instructions	
All literature is available to download for free, in a range of languages, at	

http://www.siemens.com/processinstrumentation/documentation

Accessories	Article No.
Electronic transmitter kit (includes transmitter and driver)	**7ML1830-1KN**
SITRANS RD100, loop powered display - see Chapter 7	**7ML5741-.....-.**
SITRANS RD150, remote digital display for 4 ... 20 mA and HART devices - see Chapter 7	**7ML5742-.....-....**
SITRANS RD200, universal input display with Modbus conversion - see Chapter 7	**7ML5740-.....-..**
SITRANS RD300, dual line display with totalizer and linearization curve and Modbus conversion - see Chapter 7	**7ML5744-.....-..**
For applicable back up point level switch - see point level measurement section	

[1)] Available only with Approvals options A and B.

© Siemens 2020

Selection and ordering data

	Article No.
SITRANS LC300 Capacitance level transmitter, stilling well design ↗	**7ML5671-** ■■■■■ - ■■■ 0
Continuous, contact, monitors level or interface in liquids. Extension options up to 5 m (16.40 ft).	
↗ Click on the Article No. for the online configuration in the PIA Life Cycle Portal.	
Process connection	
Threaded, 316L stainless steel	
1½" NPT [(Taper), ANSI/ASME B1.20.1]	0 D
R 1½" [(BSPT), EN 10226/PT (JIS-T), JIS B 0203]	1 D
G 1½" [(BSPP), EN ISO 228-1/PF (JIS-P), JIS B 0202]	3 D
Welded flange, 316L stainless steel, raised face[1]	
1½" ASME, 150 lb	5 D
1½" ASME, 300 lb	5 E
1½" ASME, 600 lb	5 F
2" ASME, 150 lb	5 G
2" ASME, 300 lb	5 H
2" ASME, 600 lb	5 J
3" ASME, 150 lb	5 K
3" ASME, 300 lb	5 L
3" ASME, 600 lb	5 M
4" ASME, 150 lb	5 N
4" ASME, 300 lb	5 P
4" ASME, 600 lb	5 Q
Welded flange, 316L stainless steel, Type A flat faced[1]	
DN 40, PN 16	6 C
DN 40, PN 40	6 D
DN 50, PN 16	6 E
DN 50, PN 40	6 F
DN 80, PN 16	6 G
DN 80, PN 40	6 H
DN 100, PN 16	6 J
DN 100, PN 40	6 K
Sanitary, hastelloy, duplex or other custom process connections available.	
Please contact a local sales person for details. For more information, please visit http://www.automation.siemens.com/aspa_app.	
Probe Length (from flange face or including process thread)	
Add Order code Y01 and plain text: "Insertion length ... mm"	
300 ... 1 000 mm (11.81 ... 39.37 inch)	A
1 001 ... 2 000 mm (39.41 ... 78.74 inch)	B
2 001 ... 3 000 mm (78.78 ... 118.11 inch)	C
3 001 ... 4 000 mm (118.15 ... 157.48 inch)	D
4 001 ... 5 000 mm (157.52 ... 196.85 inch)	E
Thermal isolator	
Without thermal isolator	0
With thermal isolator [for process connection temperatures over 85 °C (185 °F)]	1
Wetted seals	
FKM	0
FFKM [for process temperatures above -20 °C (4 °F)][2]	1
Probe material	
35 mm (1.38 inch) diameter stilling well, with 19 mm (0.75 inch) diameter 316L stainless steel, PFA lined rod with PTFE spacers	1

	Article No.
SITRANS LC300 Capacitance level transmitter, stilling well design	**7ML5671-** ■■■■■ - ■■■ 0
Continuous, contact, monitors level or interface in liquids. Extension options up to 5 m (16.40 ft).	
Approvals	
General Safety (CSA, FM, CE, RCM)	A
Dust Ignition Proof With IS Probe CE, RCM, ATEX II 1/2 D T100 °C	B
Flame Proof Enclosure With IS Probe CE, RCM, ATEX II 1/2 G EEx d [ia] IIC T6 ... T1, ATEX II 1/2 D T100 °C	C
Dust Ignition Proof With IS Probe CSA/FM Class II, Div. 1, Groups E, F, G CSA/FM Class III T4	D
Explosion Proof Enclosure With IS Probe CSA/FM Class I, Div. 1, Groups A, B, C, D CSA/FM Class II, Div. 1, Groups E, F, G CSA/FM Class III T4	E
Enclosure	
Aluminum epoxy coated 2 x ½" NPT via adapter - cable inlet, IP65	A
Aluminum epoxy coated 2 x M20 x 1.5 cable inlet, IP65	B
Aluminum epoxy coated 2 x ½" NPT via adapter - cable inlet, IP68	C
Aluminum epoxy coated 2 x M20 x 1.5 cable inlet, IP68	D
Stainless steel, please contact a local sales person for details. For more information, please visit http://www.automation.siemens.com/aspa_app.	

[1] Flange bolting patterns and facings dimensionally correspond to the applicable ASME B16.5 or EN 1092-1 standard.

[2] Not available with FM approvals.

Further designs	Order code
Please add "**-Z**" to Article No. and specify Order code(s).	
Insertion length, specify in plain text: Y01: ... mm	**Y01**
Stainless steel tag [70 x 13 mm (2.75 x 0.5 inch)]: Measuring-point number/identification (max. 27 characters) specify in plain text	**Y15**
Manufacturer's Test Certificate: M to DIN 55350, Part 18 and to ISO 9000	**C11**
Material inspection Certificate Type 3.1 per EN 10204	**C12**
INMMETRO[1]	**E34**
Operating Instructions	
All literature is available to download for free, in a range of languages, at	

http://www.siemens.com/processinstrumentation/documentation

Accessories	Article No.
Electronic transmitter kit (includes transmitter and driver)	**7ML1830-1KN**
SITRANS RD100, loop powered display - see Chapter 7	**7ML5741-.....-.**
SITRANS RD150, remote digital display for 4 ... 20 mA and HART devices - see Chapter 7	**7ML5742-.....-....**
SITRANS RD200, universal input display with Modbus conversion - see Chapter 7	**7ML5740-.....-..**
SITRANS RD300, dual line display with totalizer and linearization curve and Modbus conversion - see Chapter 7	**7ML5744-.....-..**
For applicable back up point level switch - see point level measurement section	

[1] Available only with Approvals options A and B.

© Siemens 2020

Selection and ordering data

	Article No.
SITRANS LC300 Capacitance level transmitter, cable design ↗	**7ML5672-** ■ ■ ■ ■ ■ - ■ ■ ■ **0**
Continuous, contact, monitors level or interface in liquids or solids. Extension options up to 25 m (82.02 ft).	
↗ Click on the Article No. for the online configuration in the PIA Life Cycle Portal.	
Process connection	
Threaded, 316L stainless steel	
1½" NPT [(Taper), ANSI/ASME B1.20.1]	**0 D**
R 1½" [(BSPT), EN 10226/PT (JIS-T), JIS B 0203]	**1 D**
G 1½" [(BSPP), EN ISO 228-1/PF (JIS-P), JIS B 0202]	**3 D**
Welded flange, 316L stainless steel, raised face[1]	
1½" ASME, 150 lb	**5 D**
1½" ASME, 300 lb	**5 E**
1½" ASME, 600 lb	**5 F**
2" ASME, 150 lb	**5 G**
2" ASME, 300 lb	**5 H**
2" ASME, 600 lb	**5 J**
3" ASME, 150 lb	**5 K**
3" ASME, 300 lb	**5 L**
3" ASME, 600 lb	**5 M**
4" ASME, 150 lb	**5 N**
4" ASME, 300 lb	**5 P**
4" ASME, 600 lb	**5 Q**
Welded flange, 316L stainless steel, Type A flat faced[1]	
DN 40, PN 16	**6 C**
DN 40, PN 40	**6 D**
DN 50, PN 16	**6 E**
DN 50, PN 40	**6 F**
DN 80, PN 16	**6 G**
DN 80, PN 40	**6 H**
DN 100, PN 16	**6 J**
DN 100, PN 40	**6 K**
Sanitary, hastelloy, duplex or other custom process connections available.	
Please contact a local sales person for details. For more information, please visit http://www.automation.siemens.com/aspa_app.	
Probe Length (from flange face or including process thread)	
Add Order code Y01 and plain text: "Insertion length ... mm"	
1 000 ... 2 000 mm (39.37 ... 78.74 inch)	**A**
2 001 ... 4 000 mm (78.78 ... 157.48 inch)	**B**
4 001 ... 6 000 mm (157.52 ... 236.22 inch)	**C**
6 001 ... 8 000 mm (236.26 ... 314.96 inch)	**D**
8 001 ... 10 000 mm (315.00 ... 393.70 inch)	**E**
8 001 ... 10 000 mm (315.00 ... 393.70 inch)	**F**
12 001 ... 14 000 mm (472.48 ... 551.18 inch)	**G**
14 001 ... 16 000 mm (551.22 ... 629.92 inch)[2]	**H**
16 001 ... 18 000 mm (629.96 ... 708.66 inch)[2]	**J**
18 001 ... 20 000 mm (708.70 ... 787.40 inch)[2]	**K**
20 001 ... 22 000 mm (787.44 ... 866.14 inch)[2]	**L**
22 001 ... 24 000 mm (866.18 ... 944.88 inch)[2]	**M**
24 001 ... 25 000 mm (944.92 ... 984.25 inch)[2]	**N**
Thermal isolator	
Without thermal isolator	**0**
With thermal isolator [for process connection temperatures over 85 °C (185 °F)]	**1**
Wetted seals	
FKM	**0**
FFKM [for process temperatures above -20 °C (4 °F)][3]	**1**

	Article No.
SITRANS LC300 Capacitance level transmitter, cable design	**7ML5672-** ■ ■ ■ ■ ■ - ■ ■ ■ **0**
Continuous, contact, monitors level or interface in liquids or solids. Extension options up to 25 m (82.02 ft).	
Probe material	
Bare 316L stainless steel cable and 316L stainless steel cable weight, tinned copper crimp, PTFE backing ring, PEEK isolator and PFA lined active shield	**0**
Approvals	
General Safety (CSA, FM, CE, RCM)	**A**
Dust Ignition Proof With IS Probe CE, RCM, ATEX II 1/2 D T100 °C	**B**
Flame Proof Enclosure With IS Probe CE, RCM, ATEX II 1/2 G EEx d [ia] IIC T6 ... T1, ATEX II 1/2 D T100 °C	**C**
Dust Ignition Proof With IS Probe CSA/FM Class II, Div. 1, Groups E, F, G CSA/FM Class III T4	**D**
Explosion Proof Enclosure With IS Probe CSA/FM Class I, Div. 1, Groups A, B, C, D CSA/FM Class II, Div. 1, Groups E, F, G CSA/FM Class III T4	**E**
Enclosure	
Aluminum epoxy coated 2 x ½" NPT via adapter - cable inlet, IP65	**A**
Aluminum epoxy coated 2 x M20 x 1.5 cable inlet, IP65	**B**
Aluminum epoxy coated 2 x ½" NPT via adapter - cable inlet, IP68	**C**
Aluminum epoxy coated 2 x M20 x 1.5 cable inlet, IP68	**D**
Stainless steel, please contact a local sales person for details. For more information, please visit http://www.automation.siemens.com/aspa_app.	

1) Flange bolting patterns and facings dimensionally correspond to the applicable ASME B16.5 or EN 1092-1 standard.

2) Cable lengths from 15 000 mm (590.55 inch) to 25 000 mm (984.25 inch) can be used in non-conductive media. Contact Factory for assistance.

3) Not available with FM approvals.

© Siemens 2020

Selection and ordering data	Order code
Further designs	
Please add "**-Z**" to Article No. and specify Order code(s).	
Insertion length, specify in plain text: Y01: ... mm	**Y01**
Stainless steel tag [70 x 13 mm (2.75 x 0.5 inch)]: Measuring-point number/identification (max. 27 characters) specify in plain text	**Y15**
Manufacturer's Test Certificate: M to DIN 55350, Part 18 and to ISO 9000	**C11**
Material inspection Certificate Type 3.1 per EN 10204	**C12**
INMETRO[1)]	**E34**
Operating Instructions	
All literature is available to download for free, in a range of languages, at	

http://www.siemens.com/processinstrumentation/documentation

Accessories	Article No.
Electronic transmitter kit (includes transmitter and driver)	**7ML1830-1KN**
SITRANS RD100, loop powered display - see Chapter 7	**7ML5741-.....-.**
SITRANS RD150, remote digital display for 4 ... 20 mA and HART devices - see Chapter 7	**7ML5742-.....-....**
SITRANS RD200, universal input display with Modbus conversion - see Chapter 7	**7ML5740-.....-..**
SITRANS RD300, dual line display with totalizer and linearization curve and Modbus conversion - see Chapter 7	**7ML5744-.....-..**
For applicable back up point level switch - s ee point level measurement section	

[1)] Available only with Approvals options A and B.

© Siemens 2020

Selection and ordering data

	Article No.
SITRANS LC300 Capacitance level transmitter, PFA coated cable design ↗	**7ML5673-** ■■■■■ - ■■■■
Continuous, contact, monitors level or interface in liquids or solids. Extension options up to 25 m (82.02 ft).	
↗ Click on the Article No. for the online configuration in the PIA Life Cycle Portal.	
Process connection	
Threaded, 316L stainless steel	
1½" NPT [(Taper), ANSI/ASME B1.20.1]	**0 D**
R 1½" [(BSPT), EN 10226/PT (JIS-T), JIS B 0203]	**1 D**
G 1½" [(BSPP), EN ISO 228-1/PF (JIS-P), JIS B 0202]	**3 D**
Welded flange, 316L stainless steel, raised face[1]	
1½" ASME, 150 lb	**5 D**
1½" ASME, 300 lb	**5 E**
1½" ASME, 600 lb	**5 F**
2" ASME, 150 lb	**5 G**
2" ASME, 300 lb	**5 H**
2" ASME, 600 lb	**5 J**
3" ASME, 150 lb	**5 K**
3" ASME, 300 lb	**5 L**
3" ASME, 600 lb	**5 M**
4" ASME, 150 lb	**5 N**
4" ASME, 300 lb	**5 P**
4" ASME, 600 lb	**5 Q**
Welded flange, 316L stainless steel, Type A flat faced[1]	
DN 40, PN 16	**6 C**
DN 40, PN 40	**6 D**
DN 50, PN 16	**6 E**
DN 50, PN 40	**6 F**
DN 80, PN 16	**6 G**
DN 80, PN 40	**6 H**
DN 100, PN 16	**6 J**
DN 100, PN 40	**6 K**
Sanitary, hastelloy, duplex or other custom process connections available. Please contact a local sales person for details. For more information, please visit http://www.automation.siemens.com/aspa_app.	
Probe Length (from flange face or including process thread)	
Add Order code Y01 and plain text: "Insertion length ... mm"	
1 000 ... 2 000 mm (39.37 ... 78.74 inch)	**A**
2 001 ... 4 000 mm (78.78 ... 157.48 inch)	**B**
4 001 ... 6 000 mm (157.52 ... 236.22 inch)	**C**
6 001 ... 8 000 mm (236.26 ... 314.96 inch)	**D**
8 001 ... 10 000 mm (315.00 ... 393.70 inch)	**E**
10 001 ... 12 000 mm (393.74 ... 472.44 inch)	**F**
12 001 ... 14 000 mm (472.48 ... 551.18 inch)	**G**
14 001 ... 16 000 mm (551.22 ... 629.92 inch)[2]	**H**
16 001 ... 18 000 mm (629.96 ... 708.66 inch)[2]	**J**
18 001 ... 20 000 mm (708.70 ... 787.40 inch)[2]	**K**
20 001 ... 22 000 mm (787.44 ... 866.14 inch)[2]	**L**
22 001 ... 24 000 mm (866.18 ... 944.88 inch)[2]	**M**
24 001 ... 25 000 mm (944.92 ... 984.25 inch)[2]	**N**
Thermal isolator	
Without thermal isolator	**0**
With thermal isolator [for process connection temperatures over 85 °C (185 °F)]	**1**

	Article No.
SITRANS LC300 Capacitance level transmitter, PFA coated cable design	**7ML5673-** ■■■■■ - ■■■■
Continuous, contact, monitors level or interface in liquids or solids. Extension options up to 25 m (82.02 ft).	
Wetted seals	
FKM	**0**
FFKM [for process temperatures above -20 °C (-4 °F)][3]	**1**
Probe material	
PFA coated cable and 316L stainless steel cable weight, PEEK isolator and PFA lined active shield	**1**
Approvals	
General Safety (CSA, FM, CE, RCM)	**A**
Dust Ignition Proof With IS Probe CE, RCM, ATEX II 1/2 D T100 °C	**B**
Flame Proof Enclosure With IS Probe CE, RCM, ATEX II 1/2 G EEx d [ia] IIC T6 ... T1, ATEX II 1/2 D T100 °C	**C**
Dust Ignition Proof With IS Probe CSA/FM Class II, Div. 1, Groups E, F, G CSA/FM Class III T4	**D**
Explosion Proof Enclosure With IS Probe CSA/FM Class I, Div. 1, Groups A, B, C, D CSA/FM Class II, Div. 1, Groups E, F, G CSA/FM Class III T4	**E**
Enclosure	
Aluminum epoxy coated 2 x ½" NPT via adapter - cable inlet, IP65	**A**
Aluminum epoxy coated 2 x M20 x 1.5 cable inlet, IP65	**B**
Aluminum epoxy coated 2 x ½" NPT via adapter - cable inlet, IP68	**C**
Aluminum epoxy coated 2 x M20 x 1.5 cable inlet, IP68	**D**
Stainless steel, please contact a local sales person for details. For more information, please visit http://www.automation.siemens.com/aspa_app.	
Mounting eye	
Without Mounting eye	**0**
With mounting eye	**1**

[1] Flange bolting patterns and facings dimensionally correspond to the - applicable ASME B16.5 or EN 1092-1 standard.

[2] Cable lengths from 15 000 mm (590.55 inch) to 25 000 mm (984.25 inch) can be used in non-conductive media. Contact Factory for assistance.

[3] Not available with FM approvals.

© Siemens 2020

Selection and ordering data

	Article No.
Further designs	
Please add "**-Z**" to Article No. and specify Order code(s).	
Insertion length, specify in plain text: Y01: ... mm	**Y01**
Stainless steel tag [70 x 13 mm (2.75 x 0.5 inch)]: Measuring-point number/identification (max. 27 characters) specify in plain text	**Y15**
Manufacturer's Test Certificate: M to DIN 55350, Part 18 and to ISO 9000	**C11**
Material inspection Certificate Type 3.1 per EN 10204	**C12**
INMETRO[1)]	**E34**
Operating Instructions	
All literature is available to download for free, in a range of languages, at	

http://www.siemens.com/processinstrumentation/documentation

Accessories	Article No.
Electronic transmitter kit (includes transmitter and driver)	**7ML1830-1KN**
SITRANS RD100, loop powered display - see Chapter 7	**7ML5741-.....-.**
SITRANS RD150, remote digital display for 4 ... 20 mA and HART devices - see Chapter 7	**7ML5742-.....-....**
SITRANS RD200, universal input display with Modbus conversion - see Chapter 7	**7ML5740-.....-..**
SITRANS RD300, dual line display with totalizer and linearization curve and Modbus conversion - see Chapter 7	**7ML5744-.....-..**
For applicable back up point level switch - see point level measurement section	

1) Available only with Approvals options A and B.

	Article No.
LC300 Specials[1)]	
LC300 Cable Extensions, 316L stainless steel	
Kit, Stainless steel cable extension, 1 m, adjustable by customer	**A5E01163688**
Kit, Stainless steel cable extension, 3 m, adjustable by customer	**A5E01163689**
Kit, Stainless steel cable extension, 5 m, adjustable by customer	**A5E01163690**
Kit, Stainless steel cable extension, 10 m, adjustable by customer	**A5E01163691**
Kit, Stainless steel cable extension, 15 m, adjustable by customer	**A5E01163693**
Kit, Stainless steel cable extension, 20 m, adjustable by customer	**A5E01163695**
LC300 Cable Extensions, 316 stainless steel with PFA coating	
Kit, PFA cable extension, 1 m	**A5E01163709**
Kit, PFA cable extension, 3 m	**A5E01163710**
Kit, PFA cable extension, 5 m	**A5E01163711**
Kit, PFA cable extension, 10 m	**A5E01163712**
Kit, PFA cable extension, 15 m	**A5E01163713**
Kit, PFA cable extension, 20 m	**A5E01163714**
LC300 Mounting Eye	
Spare mounting eye (LC300 PFA versions only)	**A5E01163717**
LC300 Weight Kit, 316L stainless steel	
Kit, Spare stainless steel weight. To be used in any cable version of CLS300, or stainless steel cable version of LC300	**A5E01163727**

Customers interested in a custom designed device should consult a local sales person. For more information, please visit http://www.automation.siemens.com/aspa_app.

© Siemens 2020

Characteristic curves

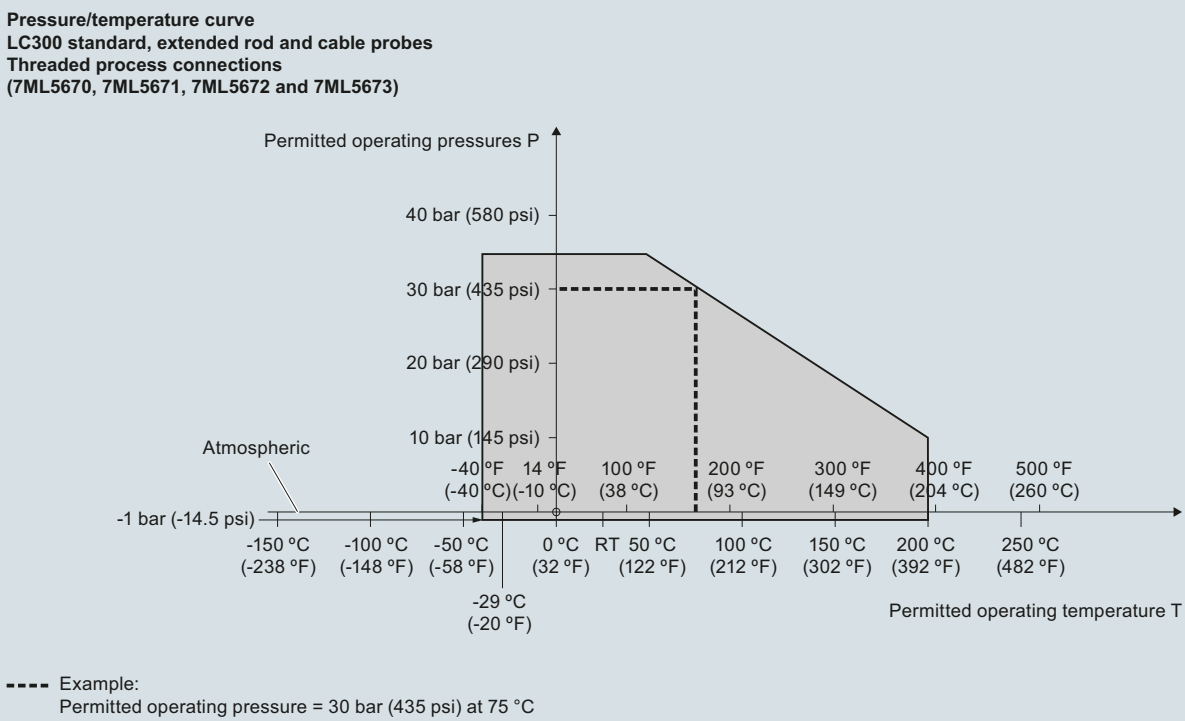

SITRANS LC300 process pressure/temperature derating curves (7ML5670, 7ML5671, 7ML5672, and 7ML5673))

© Siemens 2020

Characteristic curves (continued)

Pressure/temperature curve
LC300 standard, extended rod and cable probes
ASME flanged process connections
(7ML5670, 7ML5671, 7ML5672 and 7ML5673)

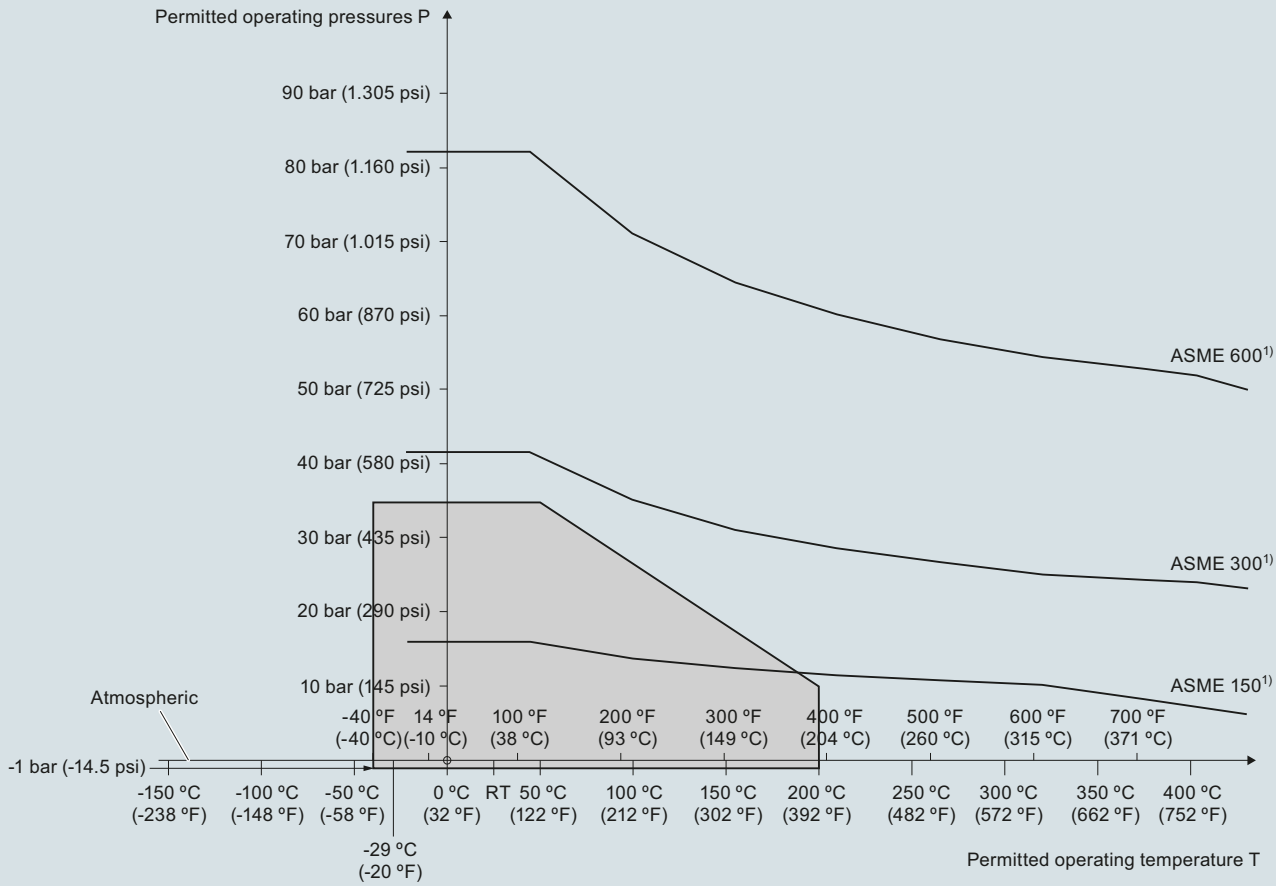

[1)] The curve denotes the minimum allowable flange class for the shaded area below.

SITRANS LC300 process pressure/temperature derating curves (7ML5670, 7ML5671, 7ML5672, and 7ML5673)

© Siemens 2020

Characteristic curves (continued)

Pressure/temperature curve
LC300 standard, extended rod and cable probes
EN flanged process connections
(7ML5670, 7ML5671, 7ML5672 and 7ML5673)

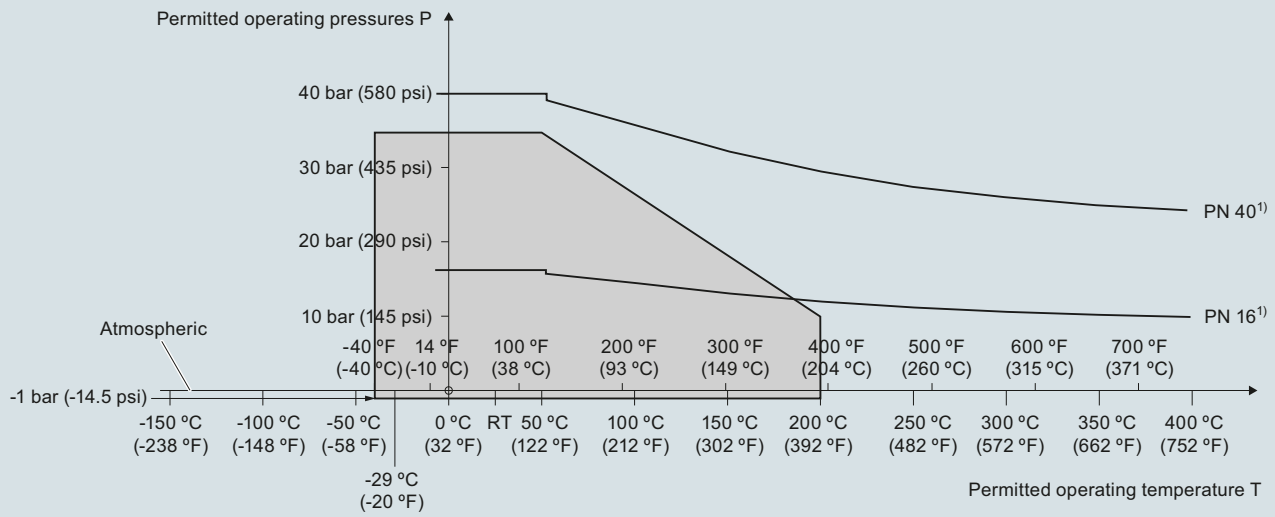

[1)] The curve denotes the minimum allowable flange class for the shaded area below.

SITRANS LC300 process pressure/temperature derating curves (7ML5670, 7ML5671, 7ML5672, and 7ML5673)

© Siemens 2020

Dimensional drawings

Threaded (7ML5670)

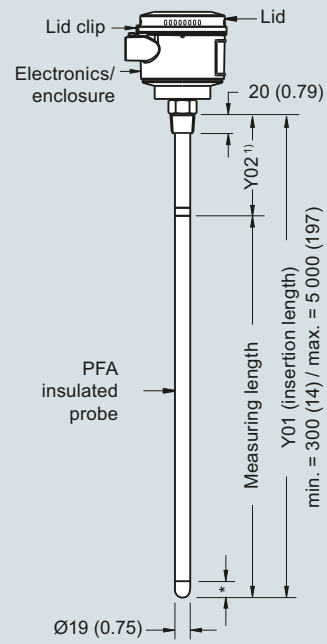

* = 30 (1.18) Inactive tip

Threaded (7ML5671)

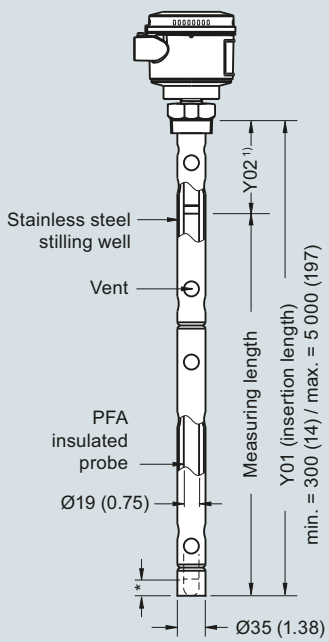

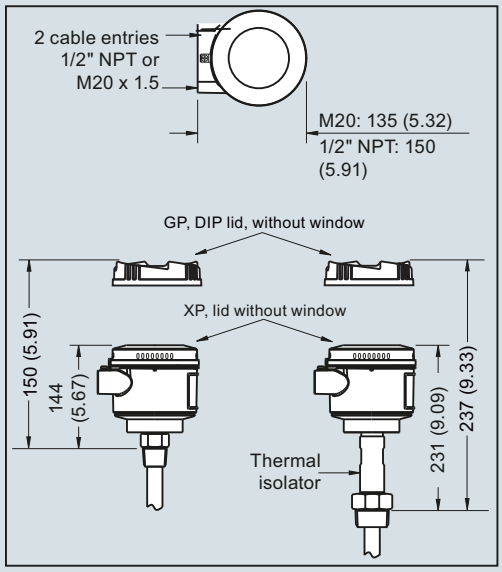

Note:

1) Rod version, threaded Y02 (including process connection): shield length = 120 (4.7).
2) For non-conductive applications only. Non-insulated cable can be shortened on site. Weight is included in measuring length.
3) For liquid and solid applications. Insulated cable cannot be shortened. Weight is **not** included in measuring length.
4) For conductive materials, the measuring length includes the exposed PFA insulated cable only. Any fluid contact with the upper rod assembly will result in a short circuit and incorrect readings.

Cable version, non-insulated[2)]
Threaded (7ML5672)

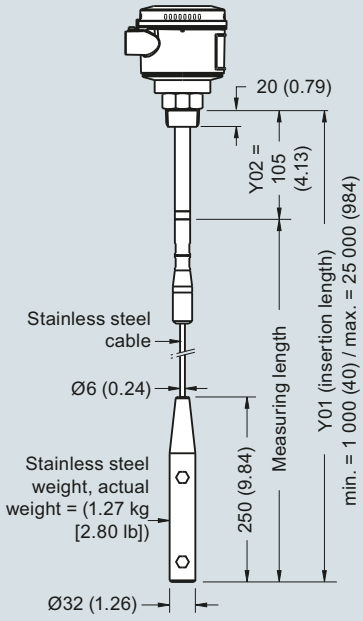

Cable version, insulated[3)]
Threaded (7ML5673)

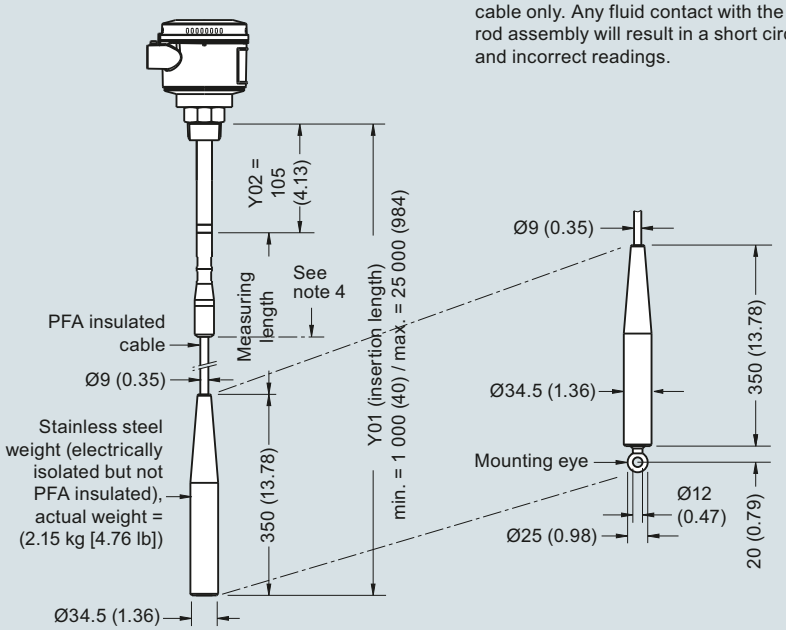

SITRANS LC300 threaded process connections, dimensions in mm (inch)

© Siemens 2020

Dimensional drawings (continued)

Welded Flange (7ML5670)

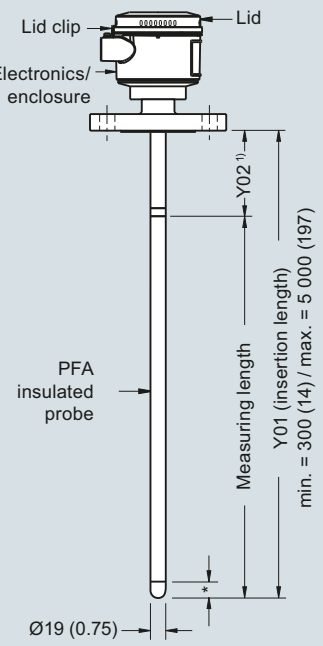

* = 30 (1.18) inactive tip

Welded Flange (7ML5671)

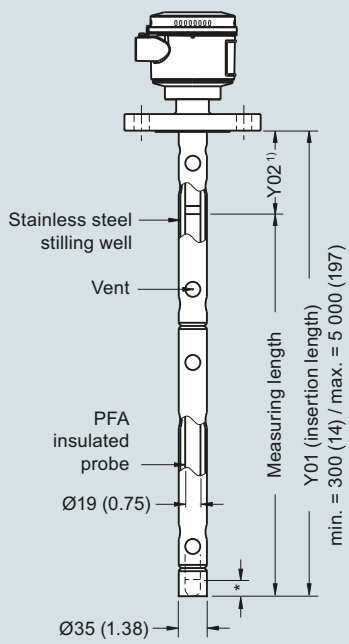

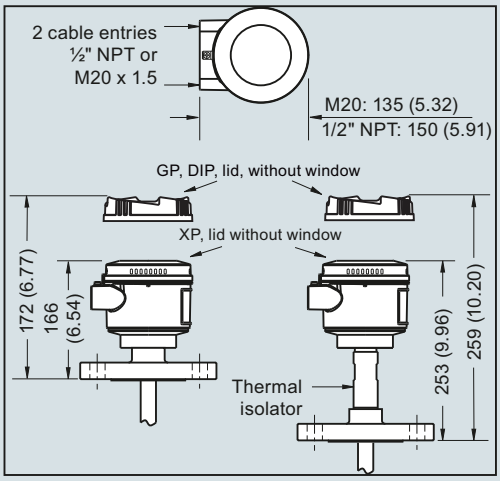

Flange Facing (raised face)	
Flange Class	**Facing thickness**
△ ASME 150/300	2 (0.08)
△ ASME 600/900	7 (0.28)
△ PN16/40	2 (0.08)

Notes:

1) Rod version, welded flange Y02: shield length = 100 (3.9).
2) For non-conductive applications only. Non-insulated cable can be shortened on site. Weight is included in measuring length.
3) For liquid and solid applications. Insulated cable cannot be shortened. Weight is **not** included in measuring length.
4) For conductive materials, the measuring length includes the exposed PFA insulated cable only. Any fluid contact with the upper rod assembly will result in a short circuit and incorrect readings.

Cable version, non-insulated 2)
Welded Flange (7ML5672)

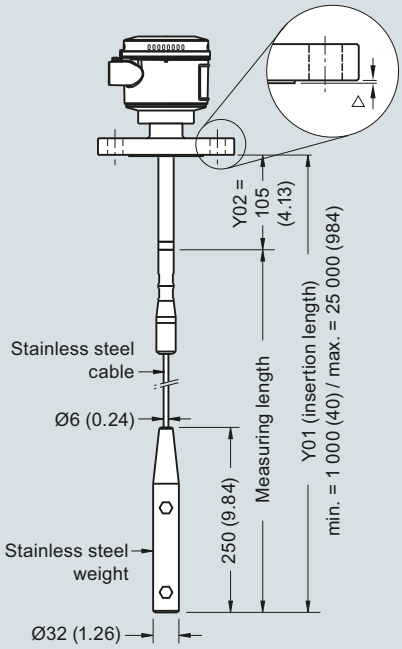

Cable version, insulated 3)
Welded Flange (7ML5673)

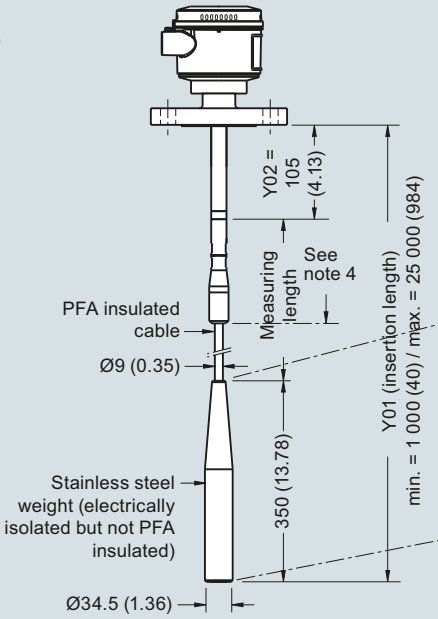

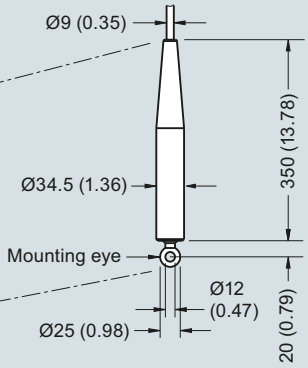

SITRANS LC300 flanged process connections, dimensions in mm (inch)

© Siemens 2020

Circuit diagrams

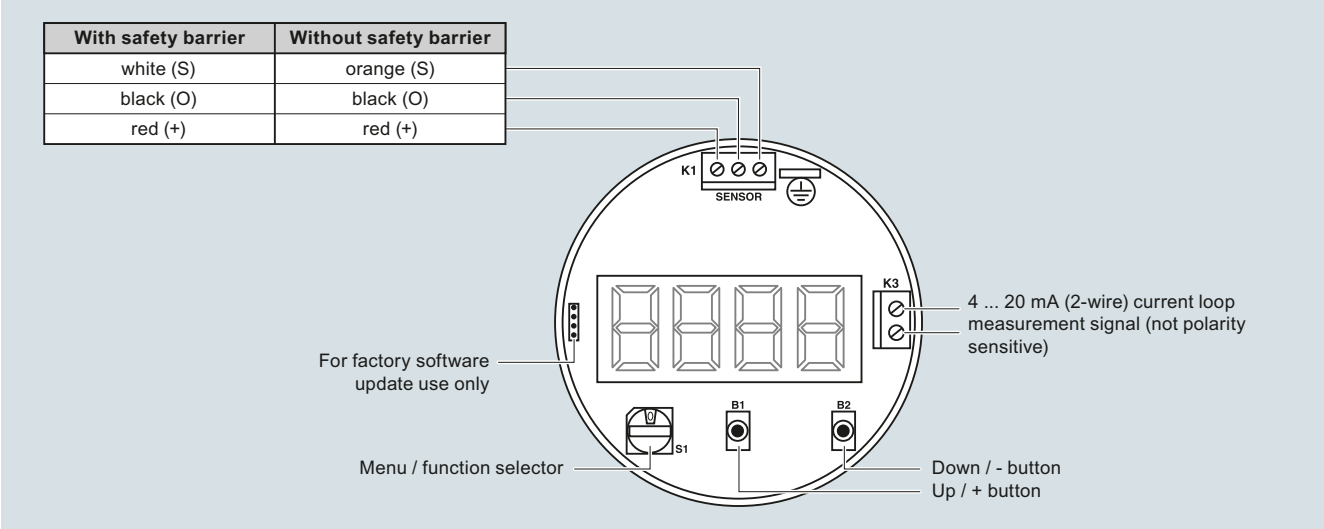

SITRANS LC300 connections

© Siemens 2020

Overview

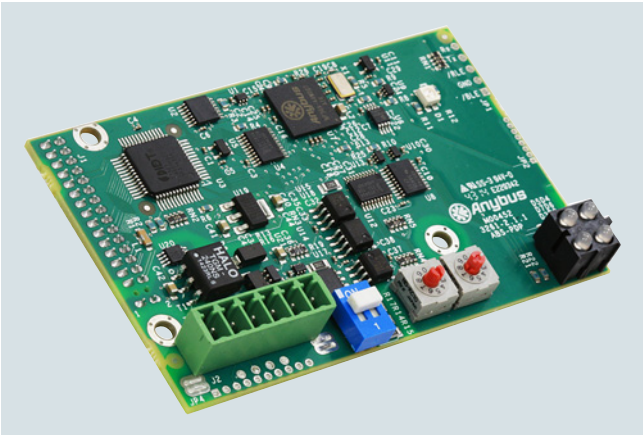

SmartLinx modules provide direct digital connection to popular industrial communications buses with true plug-and-play compatibility with products manufactured by Siemens.

Benefits

- Fast, easy installation
- Direct connection: no additional installation required
- Scaleable application layer allows for optimized network bandwidth and memory requirements (for PROFIBUS DP-V0 and DeviceNet only)
- Modules available for PROFIBUS DP-V0, PROFIBUS DP-V1, PROFINET, DeviceNet, Modbus TCP/IP, and EtherNet/IP

Application

With the addition of a SmartLinx module, Siemens instruments can be connected to a variety of industrial communications networks.

They're fast and easy to install, and can be added at any time. The module simply plugs into the socket on any SmartLinx enabled product. They require no secondary private buses or gateways and no separate wiring. There are no extra boxes to connect to your network so there's a minimum load on engineering and maintenance staff.

SmartLinx provides all data from the instrument, including measurement and status, and allows changes to operation parameters to be done over the bus or telemetry link. The user can select which data in the application layer to transfer over the bus. This selection saves bandwidth and memory and optimizes data throughput and speeds up the network, enabling you to connect more instruments to your network.

Selecting a communications module: PROFIBUS DP-V0 versus PROFIBUS DP-V1

The PROFIBUS DP-V1 card was added to MultiRanger 200 HMI and HydroRanger 200 HMI to provide acyclic communication and SIMATIC PDM support over PROFIBUS and PROFINET. For backward compatibility, the PROFIBUS DP-V0 card can also be used with MultiRanger 200 HMI and HydroRanger 200 HMI.

MultiRanger 100/200, HydroRanger 200, BW500/L, and SF500 are compatible only with the PROFIBUS DP-V0 module.

Technical specifications

Module type	PROFIBUS DP-V0
Interface	RS 485 (PROFIBUS standard)
Transmission rate	All valid PROFIBUS DP rates from 9 600 Kbps ... 12 Mbps
Slave address	0 ... 99
Connection	Slave
SmartLinx module compatibility	• MultiRanger 200 HMI • MultiRanger 100/200 • HydroRanger 200 HMI • HydroRanger 200 • Milltronics BW500, BW500/L • Milltronics SF500

Module type	PROFIBUS DP-V1
Interface	RS 485 (PROFIBUS standard)
Transmission rate	All valid PROFIBUS DP rates from 9 600 Kbps ... 12 Mbps
Slave address	0 ... 99
Connection	Slave
SmartLinx module compatibility	• MultiRanger 200 HMI • HydroRanger 200 HMI

Module type	PROFINET IO module
Interface	RJ 45 female
Transmission rate	10/100 Mbits/s
Address	IP address though dip switches or via DCP or DHCP
Connection	Slave/server
SmartLinx module compatibility	• MultiRanger 200 HMI • HydroRanger 200 HMI • Milltronics BW500, BW500/L • Milltronics SF500

Module type	Modbus TCP/IP, EtherNet/IP
Interface	RJ 45 female
Transmission rate	10/100 Mbits/s
Address	IP address though dip switches or via DCP or DHCP
Connection	Slave/server
SmartLinx module compatibility	• MultiRanger 200 HMI • HydroRanger 200 HMI • Milltronics BW500, BW500/L • Milltronics SF500

Module type	DeviceNet
Interface	DeviceNet physical layer
Transmission rate	125, 250, 500
MAC address	0 ... 63
Connection	Slave (group 2)
SmartLinx module compatibility	• MultiRanger 200 HMI • MultiRanger 100/200 • HydroRanger 200 HMI • HydroRanger 200 • Milltronics BW500, BW500/L • Milltronics SF500

© Siemens 2020

Selection and ordering data	Article No.
SmartLinx modules provide direct digital connection to popular industrial communications buses with true plug-and-play compatibility with products manufactured by Siemens.	
SmartLinx PROFIBUS DP-V0 module	**7ML1830-1HR**
SmartLinx PROFIBUS DP-V1 module	**A5E35778741**
SmartLinx DeviceNet module	**7ML1830-1HT**
Smartlinx PROFINET IO module[1)]	**7ML1830-1PM**
SmartLinx Modbus TCP/IP, EtherNet/IP module	**7ML1830-1PN**
Operating Instructions	
All literature is available to download for free, in a range of languages, at	

http://www.siemens.com/processinstrumentation/documentation

1) SmartLinx PROFINET module is certified per standard V2.2.4.

© Siemens 2020

Notes

© Siemens 2020

5/2	**Product Overview**
	SIPART PS2
5/3	Technical description
	Technical specifications
5/7	- all versions
5/9	- SIPART PS2 with 4 ... 20 mA / HART
5/11	- SIPART PS2 with PROFIBUS PA/ with FOUNDATION Fieldbus
5/12	- Option modules
5/16	- Explosion protection
5/18	- Booster
	Selection and ordering data
5/19	- SIPART PS2
5/22	- SIPART PS2 in flameproof enclosure
	Dimensional drawings
5/27	- SIPART PS2
5/31	- Booster
5/29	Mounting kits
	SIPART PS100
5/33	Technical description
5/35	Technical specifications
5/37	Selection and ordering data
5/39	Dimensional drawings
	Software
Sec. 8	SIMATIC PDM, for parametrize HART and PROFIBUS PA devices

You can download all instructions, catalogs and certificates for positioners free of charge at the following Internet address:
www.siemens.com/positioners

© Siemens 2020

Overview

	Application	Description	Catalog page	Software for parameterization
Positioners				
	Position control of pneumatic linear or part-turn actuators, also for intrinsically safe operation	**SIPART PS2** Universal device for positioning pneumatic actuators • Connection: 4 ... 20 mA • HART; PROFIBUS PA or FOUNDATION Fieldbus • Local manual operation • Digital inputs and outputs • Diagnostic function • Blocking function • Automatic commissioning	5/3	SIMATIC PDM
	As above, but in flameproof enclosure for explosion-proof application	**SIPART PS2** As above, but in flameproof aluminum and stainless steel enclosure	5/3	SIMATIC PDM
	Position control of pneumatic linear or part-turn actuators	**SIPART PS100** NEW Positioner for positioning pneumatic actuators • Connection 4 to 20 mA • Local manual operation • Digital inputs and outputs • Automatic commissioning via the press of a button	5/33	

Supplied product documentation on DVD and safety instructions

The scope of delivery of the Siemens products for process instrumentation includes a multilingual instruction sheet with **safety instructions** as well as a uniform **mini DVD – Process Instrumentation and Weighing Systems**.

This DVD contains the most important manuals and certificates for the Siemens process instrumentation and weighing technology portfolio. The delivery may also contain product-specific or order-specific printed materials.

For additional information, refer to the Annex on page 10/3.

© Siemens 2020

Overview

SIPART PS2 electropneumatic positioner in polycarbonate enclosure with aluminum gauge block (optional)

SIPART PS2 electropneumatic positioner in aluminum enclosure

SIPART PS2 electropneumatic positioner in stainless steel enclosure with stainless steel gauge block (optional)

SIPART PS2 electropneumatic positioner in flameproof aluminum enclosure (Ex d) with aluminum gauge block (optional)

SIPART PS2 electropneumatic positioner in flameproof stainless steel enclosure 316L with stainless steel gauge block (optional)

The SIPART PS2 electropneumatic positioners are used to control the process valve or damper position of pneumatic linear or part-turn actuators or via positioning cylinder according to the setpoint specification. A digital input can trigger holding of the position or approach of the safety setting of the process valve.

Benefits

SIPART PS2 positioners offer decisive advantages:

- Simple mounting and automatic commissioning
- Simple operation and configuration of the device using 3 buttons and one 2-line local display or via SIMATIC PDM
- Very high control performance
- Negligible air consumption in stationary operation
- "Tight closing" function ensures maximum positioning pressure on the process valve seat
- "Fast Open/Fast Close" function for defined approach of the end position with fast reaction to new setpoint specifications
- "Fail in Place" function:
  Maintain current position on failure of electrical and/or pneumatic auxiliary power
- Numerous functions can be activated by simple configuring (e.g. characteristic curves and limits)
- One device variant for linear and part-turn actuators
- Insensitive to vibrations due to few moving parts and optionally with wear-free position detection
- External non-contacting sensor as option for extreme ambient conditions

© Siemens 2020

- "Intelligent solenoid valve": Solenoid valve function and diagnostics in one device
- Extensive diagnostic functions for process valve and actuator, e.g.:
  - Full Stroke Test
  - Multi Step Response Test
  - Valve Performance Test
  - Valve Signature, pressure sensor-aided
  - Partial Stroke Test e.g. for safety process valves (also pressure sensor-aided) for performance and maintenance evaluation of the valve
- Can be operated with natural gas, carbon dioxide, nitrogen or noble gases
- SIL (Safety Integrity Level) 2

Application

The SIPART PS2 positioner is used worldwide on all pneumatic actuators, in all applications and industries:

- Chemical industry
- Petrochemical industry
- Oil and gas
- Water/wastewater industry
- Power supply
- Pharmaceutical industry
- Food, beverage and tobacco industries

The devices are available in variants for:

- 4 to 20 mA
- HART communication
- PROFIBUS PA communication
- FOUNDATION Fieldbus (FF) communication
- Single-and double-acting valves in various enclosure designs and various materials (polycarbonate, aluminum and stainless steel)
- Applications without explosion protection requirements
- Hazardous applications in the versions:
  - Device protection with intrinsic safety (Ex i) for use in Zone 1, 2, 21, 22 or Class I, II, III/Division 1/Groups A-G
  - Device dust ignition protection by enclosure (Ex t) type of protection for use in Zone 21, 22 or Class II, III/Division 1/Groups E-G
  - Device protection with increased security (Ex e) for use in Zone 2 or Class I, Division 2, Groups A-D
  - Device protection with flameproof enclosure (Ex d) for use in Zone 1 or Class I, Division 1, Groups A-D

Stainless steel enclosure for extreme ambient conditions

The SIPART PS2 is available in a stainless steel enclosure for use in particularly aggressive environments (e.g. offshore operation, chlorine plants). The device functionality is not different due to the enclosure variants.

Design

The SIPART PS2 digital positioner comprises the following components:

- Base plate with lid with/without inspection window, depending on the variant
- Electronics with screw-type terminals:
  - 4 to 20 mA
  - 4 to 20 mA with HART
  - PROFIBUS PA according to IEC 61158-2, bus-supplied
  - FOUNDATION Fieldbus (FF) according to IEC 61158-2, bus-supplied
- Position feedback via potentiometer or non-contacting sensor (NCS)
- Pneumatic block

The pneumatic connections for supply air and actuating pressure are located on the right side of the enclosure. A gauge block, venting gauge block, booster, VDI3847 interface or a safety solenoid valve can be connected there as options. The SIPART PS2 positioner is fitted to the linear or part-turn actuator using an appropriate mounting kit.

Optional expansion with modules and functions

Optionally, SIPART PS2 can be expanded with the following modules and functions:

Analog Output Module (AOM)

Analog position feedback 4 to 20 mA.

Digital I/O Module (DIO) with 3 digital outputs and 1 digital input

- Signaling of two limits of the travel or angle. The two limits can be parameterized independently as maximum or minimum values.
- Output of an alarm if the setpoint position of the final control element is not reached in automatic mode or if a device/valve fault occurs.
- 2nd digital input for alarm signals or for triggering safety reactions, e.g. hold position or approach safety position.

Inductive Limit Switches (ILS)

Via the inductive switches, 2 independent limits can be set and monitored as NAMUR signal (EN 60947-5-6). The module also contains an integrated fault indicator (see "Digital I/O Module (DIO)").

Mechanic Limit Switches (MLS)

2 independent limits can be monitored via the mechanical switches. The module also contains an integrated fault indicator (see "Digital I/O Module (DIO)").

Valid for all modules described above:

- All signals are electrically isolated from one another and from the basic unit. The outputs indicate self-signaling faults. The modules are easy to retrofit.

Separate mounting of positioner and position detection

Separate mounting of the positioner and position detection can be implemented with SIPART PS2. Only measurement of the stroke or angle, for example, is carried out directly on the actuator. This means that the positioner can be installed at a distance in a protected area. Components are connected electrically via a cable and pneumatically via tubes or pipes. The system is often advantageous if the ambient conditions at the valve exceed the specified values for the positioner (e.g. strong vibrations, radiation, magnetism).

© Siemens 2020

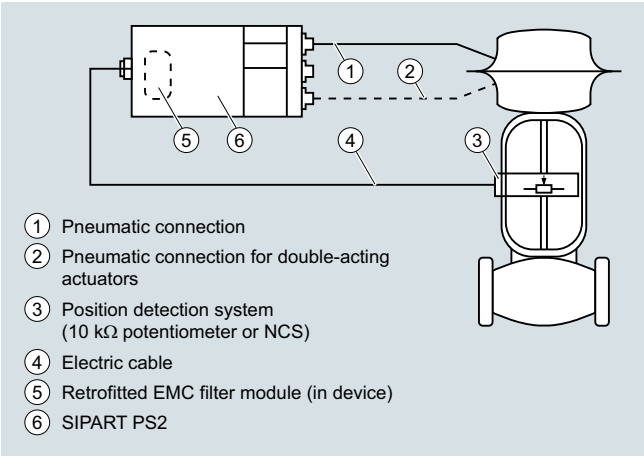

Separate installation of the position detection and positioner SIPART PS2

Use for position detection

The following can be used for position detection:

SIPART PS2, NCS for strokes > 14 mm

- Non-contacting sensor (NCS)
- Position Transmitter
- Linear potentiometers
- Commercial sensors

Non-contacting sensor (NCS)

For SIPART PS2

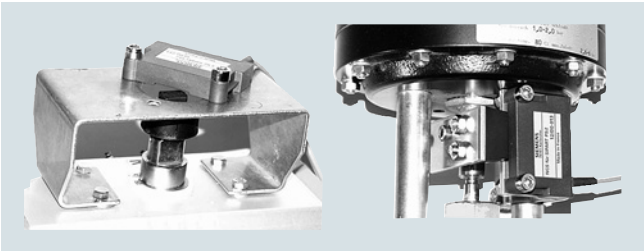

Left: NCS for part-turn actuator (6DR4004-.N.10) mounted on mounting console 6DR4004-1D to 4D
Right: NCS for linear actuator (6DR4004-.N.20) mounted with actuator-specific/customer-specific mounting solution

Position Transmitter

With potentiometer, with NCS, with NCS and ILS or with NCS and MLS for SIPART PS2.
Mounting takes place like with SIPART PS2.

Linear potentiometers

With 3K, 5K or 10 to 20 kΩ (e.g. pneumatic cylinder).

Commercial sensors

With 4 to 20 mA or 0 to 10 V (only with non-ex applications).

Function

Monitoring functions

The SIPART PS2 has comprehensive monitoring functions with which changes on the actuator and process valve can be detected and signaled depending on the set limit. This information provides important indications on the status of the valve. Determined/monitored measuring data:

- Travel integral
- Number of changes in direction
- Alarm counter
- Self-adjusting deadband
- Process valve end position (e.g. for detection of process valve seat wear or deposits)
- Operating hours (also according to temperature and position ranges) as well as min./max. temperature
- Operating cycles of piezoelectric valves in pneumatic block
- Process valve positioning time
- Actuator leakages

At a glance with the Diagnostics Cockpit

With the Diagnostics Cockpit, the HART variants of the SIPART PS2 provide a straightforward way of getting started with the world of diagnostic capabilities. All relevant information on the valve, such as setpoint, actual value, control deviation, status of the diagnostic system, etc., is available at a glance. Additional facts and details are just a few mouse clicks away from the Diagnostics Cockpit.

© Siemens 2020

Status monitoring with 3-stage alarm concept

The intelligent electropneumatic SIPART PS2 positioner is equipped with additional monitoring functions. The status alarms derived from these monitoring functions signal active faults of the valve with grading in the form of traffic light signaling. The status alarms are symbolized by a wrench in the colors green, yellow and red (in SIMATIC PDM and Maintenance Station):

- Need for maintenance (green wrench)
- Urgent need for maintenance (yellow wrench)
- Imminent danger of valve failure or general failure (red wrench)

This allows users to put early measures into action before an acute process valve or actuator fault occurs which could result in a system shutdown. Early alarms indicate, for example, the onset of a diaphragm break in the actuator or progressive sluggishness of a valve. In this way, users can guarantee plant safety and availability with suitable maintenance strategies.

This 3-stage alarm hierarchy also allows early detection and signaling of static friction of a packing gland, wear of a process valve plug/seat, or deposits or coatings on the fittings.

These fault indications can be output either line-conducted over the alarm outputs of the positioner (maximum 3), or via communication over the HART or fieldbus interfaces. In this case, the HART, PROFIBUS and FOUNDATION Fieldbus variants of SIPART PS2 allow for differentiation of the various fault indications, as well as a trend representation and histogram function of all key process variables with regard to the valve.

The device display also displays the graded maintenance requirements, complete with identification of the source of the fault.

Maintenance required of control valves

The Full Stroke Test, Step Response Test, Multi Step Response Test and Valve Performance Test provide detailed information about the maintenance required of the valve. With the help of the HART communication system, you receive comprehensive test results and can identify the extent of the maintenance measures. In order to quantify the performance capability of valves, characteristic values such as step response times (T63, T86 or Txx), dead times, overshoot, hysteresis, measurement deviations and non-linearity are determined.

Functional Safety according to SIL 2

In the variants 6DR5.1.-0....-....-Z C20, the positioner is suitable for use on single-acting valves with spring return that satisfy the special requirements in terms of functional safety up to SIL 2 according to IEC 61508 or IEC 61511. The positioner depressurizes the process valve actuator on demand/in the event of a fault (safe depressurizing) and puts the process valve in the preset safety position.

Valve Signature

With pressure sensor-aided Valve Signature, the characteristic curve of the valve can be recorded, saved in the device (max. 10 characteristic curves) and displayed in PDM, for example. The reference characteristic curve is recorded at the beginning directly during initialization. Based on the exportable data, friction values, spring characteristics, hysteresis, breakout pressures can be determined. If the test is regularly repeated, characteristic curves can be compared with one another and changes over time can be displayed as the basis for a predictive maintenance approach.

Partial Stroke Test

With the pressure sensor-aided Partial Stroke Test, the function of safety (open/close) valves can be checked reliably during operation. Up to 10 characteristic curves and important parameters are saved in the device. They can be displayed in PDM, for example. Recording of the reference characteristic curve takes place during operation and in settled state. Based on the exportable data, friction values, spring characteristics, hysteresis, breakout pressures can be determined. If the test is regularly repeated, characteristic curves can be compared with one another and changes over time can be displayed as the basis for a predictive maintenance approach.

Intelligent solenoid valve

The SIPART PS2 can (parameterizable) take on the function of a solenoid valve for open/close valves and also offers intelligent diagnostics for valves with the pressure sensor-aided Partial Stroke Test, for example. For devices without explosion protection and only in connection with the pressure sensor-aided diagnostics, SIPART PS2 can also be operated with 24 V, i.e. without additional wiring. All other devices must be supplied with 4 to 20 mA. SIPART PS2 takes on the function as "Intelligent solenoid valve" with additional pressure sensor-aided diagnostics and handles multiple tasks in one device:

- The positioner opens and closes the valve quickly and without control.
- In a safety scenario, during power failure, the SIPART PS2 drives the valve into the safety position "Functional Safety according to SIL 2".
- A pressure sensor-aided Partial Stroke Test can be performed automatically at regular intervals. This test keeps the valve in regular movement and prevents rusting of the valve due to corrosion or incrustation.

Solenoid valves on control valves normally cannot be tested during operation. They are therefore not necessary when using SIPART PS2 as the depressurizing is carried out on demand by SIPART PS2. This means that, on control valves, both the control function and the shut-off function can be carried out by a single device.

Configuring

The SIPART PS2 positioner contains the following configurations:

- Input current range 0 to 20 mA or 4 to 20 mA
- Rising or falling characteristic curve at the setpoint input
- Positioning speed limit (setpoint ramp)
- Split-range mode: Adjustable start-of-scale and full-scale values
- Response threshold (deadband); self-adjusting or fixed
- Direction of action: Rising or falling output pressure with rising setpoint
- Limits of position range, start-of-scale/full-scale value
- Limits (alarms) of the process valve position: Minimum and maximum value
- Automatic tight closing stroke adjustment in accordance with the valve process characteristic curve
- Function of the digital inputs
- Function of alarm output, etc.

© Siemens 2020

Technical specifications

SIPART PS2 (all versions)

Operating conditions	
Ambient conditions	For indoor and outdoor use
Ambient temperature	In hazardous areas, observe the maximum permitted ambient temperature according to the temperature class.
• Permissible ambient temperature for operation[1)]	-30 ... +80 °C (-22 ... +176 °F) Optional -40 ... +80 °C (-40 ... +176 °F)
• Altitude	≤ 2 000 m above mean sea level. At altitudes greater than 2 000 m above mean sea level, use a suitable power supply.
• Relative humidity	0 ... 100%
Type of protection[2)]	IP66/Type NEMA 4X
Corrosion protection according to EN ISO 9227:2012 and EN ISO 12944:1999	
• 6DR5..0 Polycarbonate enclosure	C5-M medium durability
• 6DR5..3 Aluminum enclosure and 6DR5..5 Aluminum enclosure, flameproof	C5-M medium durability
• 6DR5..2 Stainless steel enclosure and 6DR5..6 Stainless steel enclosure, flameproof	C5-M high durability
Mounting position	Any. Electrical connections and exhaust opening not facing up in wet environment (outdoor/rain).
Vibration resistance	
• Harmonic oscillations (sine) according to EN 60068-2-6/10.2008	3.5 mm (0.14"), 2 ... 27 Hz, 3 cycles/axis
	98.1 m/s² (321.84 ft/s²), 27 ... 300 Hz, 3 cycles/axis
• Bumping (half-sine) according to EN 60068-2-27/02.2010	150 m/s² (492 ft/s²), 6 ms, 1 000 shocks/axis
• Noise (digitally controlled) according to EN 60068-2-64/04.2009	10 ... 200 Hz; 1 (m/s²)²/Hz (3.28 (ft/s²)²/Hz)
	200 ... 500 Hz; 0.3 (m/s²)²/Hz (0.98 (ft/s²)²/Hz)
	4 hours/axis
• Recommended continuous duty range of the complete valve	≤ 30 m/s² (98.4 ft/s²) without resonance sharpness
Climatic class	According to IEC EN 60721-3
• Storage	1K5, but -40 … +80 °C (1K5, but -40 … +176 °F)
• Transport	2K4, but -40 … +80 °C (2K4, but -40 … +176 °F)
Pneumatic data	
Auxiliary power (inlet air)	Compressed air, carbon dioxide (CO_2), nitrogen (N_2), noble gases or natural gas
• Pressure[3)]	1.4 ... 7 bar (20.3 ... 101.5 psi)
Air quality according to ISO 8573-1	
• Solid particulate size and density	Class 3
• Pressure dew point	Class 3 (min. 20 K (36 °F) below ambient temperature)
• Oil content	Class 3
Unrestricted flow (DIN 1945)	
• Inlet air (pressurize actuator)[4)]	
- 2 bar; 0.1 KV (29 psi; 0.116 CV)	4.1 Nm³/h (18.1 USgpm)
- 4 bar; 0.1 KV (58 psi; 0.116 CV)	7.1 Nm³/h (31.3 USgpm)
- 6 bar; 0.1 KV (87 psi; 0.116 CV)	9.8 Nm³/h (43.1 USgpm)
• Exhaust air (depressurize actuator for all versions except fail in place)[4)]	
- 2 bar; 0.2 KV (29 psi; 0.232 CV)	8.2 Nm³/h (36.1 USgpm)
- 4 bar; 0.2 KV (58 psi; 0.232 CV)	13.7 Nm³/h (60.3 USgpm)
- 6 bar; 0.2 KV (87 psi; 0.232 CV)	19.2 Nm³/h (84.5 USgpm)
• Exhaust air (depressurize actuator for fail in place version)	
- 2 bar; 0.1 KV (29 psi; 0.116 CV)	4.3 Nm³/h (19.0 USgpm)
- 4 bar; 0.1 KV (58 psi; 0.116 CV)	7.3 Nm³/h (32.2 USgpm)
- 6 bar; 0.1 KV (87 psi; 0.116 CV)	9.8 Nm³/h (43.1 USgpm)

Restrictor ratio	Adjustable
Auxiliary power consumption in the controlled state	< 0.036 Nm³/h (0.158 USgpm)
Sound pressure	L_{Aeq} < 75 dB L_{Amax} < 80 dB
Sound pressure with installed Siemens booster	L_{Aeq} < 95 dB L_{Amax} < 98 dB
Design	
Mode of operation	
• Range of stroke (linear actuators)	3 ... 130 mm (0.12 ... 5.12 inch); greater stroke range on request
• Angle of rotation range (part-turn actuators)	30 ... 100° (up to 180° on request)
Mounting type	
• On linear actuators	Using mounting kit 6DR4004-8V and where necessary with an additional lever arm 6DR4004-8L on actuators according to IEC 60534-6-1 (NAMUR) with ribs, bars or flat face.
• On part-turn actuators	Using mounting kit 6DR4004-8D or TGX:16300-1556 on actuators with mounting plane according to VDI/VDE 3845 and IEC 60534-6-2: The actuator-specific mounting console 6DR4004-1D ... 4D must be ordered separately, see the selection and ordering data.
Weight, positioner without option modules or accessories	
• 6DR5..0 Glass-fiber reinforced polycarbonate enclosure	Approx. 0.9 kg (1.98 lb)
• 6DR5.11 Aluminum enclosure, only single-acting	Approx. 1.3 kg (2.86 lb)
• 6DR5..2 Stainless steel enclosure	Approx. 3.9 kg (8.6 lb)
• 6DR5..3 Aluminum enclosure	Approx. 1.6 kg (3.53 lb)
• 6DR5..5 Aluminum, flameproof	Approx. 5.2 kg (11.46 lb)
• 6DR5..6 Stainless steel enclosure, flameproof	Approx. 8.4 kg (18.5 lb)
Material	
Dimensions	See "Dimension drawings"
Device versions	
• In polycarbonate enclosure 6DR5..0	Single-acting and double-acting
• In aluminum enclosure 6DR5..1	Single-acting
• In aluminum enclosures 6DR5..3 and 6DR5..5	Single-acting and double-acting
• In stainless steel enclosures 6DR5..2 and 6DR5..6	Single-acting and double-acting
Gauge block	
• Type of protection with:	
- Pressure gauge made of plastic	IP31
- Gauge made of metal	IP44
- Pressure gauge made of stainless steel 316	IP54
• Vibration resistance	According to EN 837-1
Connections, electrical	
• Screw terminals	2.5 mm² AWG30-14
• Cable bushing	
- Without explosion protection as well as with Ex i	M20x1.5 or ½-14 NPT
- With explosion protection Ex d	Ex d-certified M20x1.5; ½-14 NPT or M25x1.5
Connections, pneumatic	Female thread G¼ or ¼-18 NPT

© Siemens 2020

Technical specifications

Controller	
Controller unit	
• Five-point switch	Adaptive
• Deadband	
- dEbA = Auto	Adaptive
- dEbA = 0.1 ... 10%	Can be set as fixed value
Analog-to-digital converter	
• Scan time	10 ms
• Resolution	≤ 0.05%
• Transmission error	≤ 0.2%
• Temperature influence effect	≤ 0.1%/10 K (≤ 0.1%/18 °F)
Certificates and approvals	
Classification according to pressure equipment directive (PED 2014/68/EU)	For gases of fluid group 1, complies with requirements of article 4, paragraph 3 (sound engineering practice SEP)
CE conformity	You can find the appropriate directives and standards, including the relevant versions, in the EC Declaration of Conformity on the Internet.
UL conformity	You can find the appropriate directives and standards, including the relevant versions, in the UL-CERTIFICATE OF COMPLIANCE on the Internet.
Explosion protection	
Explosion protection according to ATEX/IECEx	Depending on the device version; see "Explosion protection" section
Natural gas as driving medium	For technical data using natural gas as driving medium, see operating instructions.

1) At ≤ -10 °C (≤ 14 °F), the refresh rate of the local display is limited. When using Analog Output Module (AOM), only T4 is permissible.

2) Max. impact energy 1 joule for enclosure with inspection window 6DR5..0 and 6DR5..1 or max. 2 joules for 6DR5..3.

3) The following applies to fail in place double acting: 3 ... 7 bar (43.5 ... 101.5 psi)

4) When using Ex d versions (6DR5..5-... and 6DR5..6-...), values are reduced by approximately 20%.

© Siemens 2020

SIPART PS2 with 4 ... 20 mA / HART

	Electronics without explosion protection	Electronics with Explosion protection Ex d	Electronics with explosion protection Ex i	Electronics with explosion protection Ex i, Ex e, Ex t
Electrical specifications				
Current input I_W				
• Rated signal range	4 ... 20 mA			
• Test voltage	840 V DC, 1 s			
• Digital input BIN1 (terminals 9/10; galvanically connected to basic device)	Suitable only for floating contact; max. contact load < 5 µA at 3 V			
2-wire connection (terminals 6/8) 6DR50.. and 6DR53..; 4 ... 20 mA 6DR51.. and 6DR52..; HART				
Current to maintain the auxiliary power supply	≥ 3.6 mA			
Required load voltage U_B (corresponds to Ω at 20 mA)				
• 4 ... 20 mA (6DR50..)				
- Typical	6.36 V (= 318 Ω)	6.36 V (= 318 Ω)	7.8 V (= 390 Ω)	7.8 V (= 390 Ω)
- Max.	6.48 V (= 324 Ω)	6.48 V (= 324 Ω)	8.3 V (= 415 Ω)	8.3 V (= 415 Ω)
• 4 ... 20 mA (6DR53..)				
- Typical	7.9 V (= 395 Ω)	-	-	-
- Max.	8.4 V (= 420 Ω)	-	-	-
• HART (6DR51..)				
- Typical	6.6 V (= 330 Ω)	6.6 V (= 330 Ω)	-	-
- Max.	6.72 V (= 336 Ω)	6.72 V (= 336 Ω)	-	-
• HART (6DR52..)				
- Typical	-	8.4 V (= 420 Ω)	8.4 V (= 420 Ω)	8.4 V (= 420 Ω)
- Max.	-	8.8 V (= 440 Ω)	8.8 V (= 440 Ω)	8.8 V (= 440 Ω)
• Static destruction limit	± 40 mA	± 40 mA	-	-
Effective internal capacitance C_i				
• 4 ... 20 mA	-	-	11 nF	"ic": 11 nF
• HART	-	-	11 nF	"ic": 11 nF
Effective internal inductance L_i				
• 4 ... 20 mA	-	-	209 µH	"ic": 209 µH
• HART	-	-	312 µH	"ic": 312 µH
For connecting to circuits with the following peak values	-	-	U_i = 30 V I_i = 100 mA P_i = 1 W	"ic": U_i = 30 V I_i = 100 mA "ec"/"t": U_n ≤ 30 V I_n ≤ 100 mA
3-/4-wire connection (terminals 2/4 and 6/8) 6DR52..; HART, explosion-proof 6DR53..; 4 ... 20 mA, not explosion-proof				
Load voltage at 20 mA	≤ 0.2 V (= 10 Ω)	≤ 0.2 V (= 10 Ω)	≤ 1 V (= 50 Ω)	≤ 1 V (= 50 Ω)
Auxiliary power U_{Aux}	18 ... 35 V DC	18 ... 35 V DC	18 ... 30 V DC	18 ... 30 V DC
Current consumption I_H	(U_{Aux} -7.5 V)/2.4 kΩ [mA]			
Effective internal capacitance C_i	-	-	22 nF	22 nF
Effective internal inductance L_i	-	-	0.12 mH	0.12 mH
For connecting to circuits with the following peak values	-	-	U_i = 30 V I_i = 100 mA P_i = 1 W	"ic": U_i = 30 V I_i = 100 mA "ec"/"t": U_n ≤ 30 V I_n ≤ 100 mA
Electrical isolation	Between U_{Aux} and I_W	Between U_{Aux} and I_W	Between U_{Aux} and I_W (2 intrinsically safe circuits)	Between U_{Aux} and I_W
HART communication				
HART version	7			
PC parameterization software	SIMATIC PDM; supports all device objects. The software is not included in the scope of delivery.			

© Siemens 2020

Technical specifications

Pressure sensor module 6DR51.. -Z P01/ -Z P02		
Current input I_W		
• Rated signal range	4 ... 20 mA	4 ... 20 mA
• Test voltage	840 V DC, 1 s	840 V DC, 1 s
• Digital input DI1 (terminals 9/10; electrically connected to the basic device)	Suitable only for floating contact; max. contact load < 5 µA at 3 V	Suitable only for floating contact; max. contact load < 5 µA with 3 V
Current to maintain the auxiliary power supply	≥ 3.6 mA	≥ 3.6 mA
Required load voltage U_B (corresponds to Ω at 20 mA)	9.4 V (= 470 Ω)	9.4 V (= 470 Ω)
Static destruction limit	± 30 V	± 40 mA
Effective internal capacitance C_i	-	-
Effective internal inductance L_i	-	-
For connecting to circuits with the following peak values	-	-

© Siemens 2020

SIPART PS2 with PROFIBUS PA/with FOUNDATION Fieldbus

	Electronics without explosion protection	Electronics with Explosion protection Ex d	Electronics with explosion protection Ex i	Electronics with explosion protection Ex i, Ex e, Ex t
Electrical specifications				
Auxiliary power supply, bus circuit	Bus-supplied			
Bus voltage	9 ... 32 V	9 ... 32 V	9 ... 24 V	9 ... 32 V
For connecting to circuits with the following peak values				
• Bus connection with FISCO supply unit			U_i = 17.5 V I_i = 380 mA P_i = 5.32 W	"ic": U_i = 17.5 V I_i = 570 mA "ec"/"t": $U_n \leq$ 32 V
• Bus connection with barrier			U_i = 24 V I_i = 250 mA P_i = 1.2 W	"ic": U_i = 32 V "ec"/"t": $U_n \leq$ 32 V
Effective internal capacitance C_i	-	-	Negligibly small	Negligibly small
Effective internal inductance L_i	-	-	8 µH	"ic": 8 µH
Current consumption	11.5 mA ± 10%			
Additional fault current	0 mA			
Safety shutdown can be activated with "jumper" (terminals 81/82)	Electrically isolated from bus circuit and digital input			
• Input resistance	> 20 kΩ			
• Signal state "0" (shutdown active)	0 ... 4.5 V or unconnected			
• Signal state "1" (shutdown not active)	13 ... 30 V			
For connecting to power supply with the following peak values			U_i = 30 V I_i = 100 mA P_i = 1 W	"ec": U_n = ≤ 30 V I_n = ≤ 100 mA "ic": U_i = 30 V I_i = 100 mA
Effective internal capacitance and inductance	-	-	Negligibly small	Negligibly small
Digital input DI1 for PROFIBUS (terminals 9/10); electrically connected to the bus circuit)	Jumpered or connection to switching contact. Suitable only for floating contact; max. contact load < 5 µA at 3 V			
Electrical isolation				
• For basic device without explosion protection and for basic device with Ex d	Electrical isolation between basic device and the input for safety shutdown, as well as the outputs of the option modules			
• For basic device Ex i	The basic device and the input to the safety shutdown, as well as the outputs of the option modules, are separate, intrinsically safe circuits.			
• For basic device Ex e, Ex t	Electrical isolation between basic device and the input for safety shutdown, as well as the outputs of the option modules			
Test voltage	840 V DC, 1 s			
PROFIBUS PA communication				
Communication	Layers 1 and 2 according to PROFIBUS PA, transmission technology according to IEC 61158-2; slave function; layer 7 (protocol layer) according to PROFIBUS DP, EN 50170 standard with the extended PROFIBUS functions (all data acyclic, manipulated variable, feedbacks and status also cyclic)			
C2 connections	Four connections to master class 2 are supported; automatic connection setup 60 s after break in communication			
Device profile	PROFIBUS PA profile B, version 3.02, more than 150 objects			
Response time to master message	Typically 10 ms			
Device address	126 (when delivered)			
PC parameterization software	SIMATIC PDM; supports all device objects. The software is not included in the scope of delivery.			
FOUNDATION Fieldbus communication				
Communications group and class	According to technical specification of the FOUNDATION Fieldbus for H1 communication			
Function blocks/functions	Group 3, Class 31PS (Publisher Subscriber) 1 Resource Block (RB2) 1 Analog Output Function Block (AO) 1 PID Function Block (PID) 1 Transducer Block (Standard Advanced Positioner Valve) Link Active Scheduler (LAS) function			
Execution times of the blocks	AO: 30 ms PID: 40 ms			
Physical layer profile	123, 511			
FF registration	Tested with ITK 6.0			
Device address	22 (when delivered)			

© Siemens 2020

Technical specifications

Option modules

Digital I/O Module (DIO)	Without explosion protection suitable for Ex d 6DR4004-8A	With explosion protection Ex i 6DR4004-6A	With explosion protection Ex i, Ex e, Ex t 6DR4004-6A
3 digital output current circuits		• Alarm output A1: Terminals 41 and 42 • Alarm output A2: Terminals 51 and 52 • Alarm output: Terminals 31 and 32	
• Auxiliary power U_{Aux}	≤ 35 V and the current consumption is to be limited to < 25 mA	-	-
• Signal state			
- High (not addressed)	Conductive, R = 1 kΩ, +3/-1% *)	≥ 2.1 mA	≥ 2.1 mA
- Low *) (addressed)	Blocked, I_R < 60 µA	≤ 1.2 mA	≤ 1.2 mA
*) The status is also Low if the basic device is faulty or without auxiliary power.	*) When using in the flameproof enclosure, the current consumption must be restricted to 10 mA per output.	Switching threshold with supply to EN 60947-5-6: U_{Aux} = 8.2 V, R_i = 1 kΩ	Switching threshold with supply to EN 60947-5-6: U_{Aux} = 8.2 V, R_i = 1 kΩ
• For connecting to circuits with the following peak values	-	U_i = 15 V I_i = 25 mA P_i = 64 mW	"ic": U_i = 15 V I_i = 25 mA "ec"/"t": U_n ≤ 15 V
Effective internal capacitance C_i	-	5.2 nF	5.2 nF
Effective internal inductance L_i	-	Negligibly small	Negligibly small
1 circuit	Digital input DI2: Terminals 11 and 12, terminals 21 and 22 (jumper)		
• Electrically connected to the basic device			
- Signal state 0	Floating contact, open		
- Signal state 1	Floating contact, closed		
- Contact load	3 V, 5 µA		
• Electrically isolated from the basic device			
- Signal state 0	≤ 4.5 V or open		
- Signal state 1	≥ 13 V		
- Natural resistance	≥ 25 kΩ		
• Static destruction limit	± 35 V	-	-
• Connecting to circuits with the following peak values	-	U_i = 25.2 V	"ic": U_i = 25.2 V "ec"/"t": U_n ≤ 25.5 V
Effective internal capacitance C_i	-	Negligibly small	Negligibly small
Effective internal inductance L_i	-	Negligibly small	Negligibly small
Electrical isolation	The three outputs, the DI2 input and the basic device are galvanically isolated from each other.		
Test voltage	840 V DC, 1 s		

Analog Output Module (AOM)	Without explosion protection suitable for Ex d 6DR4004-8J	With explosion protection Ex i 6DR4004-6J	With explosion protection Ex i, Ex e, Ex t 6DR4004-6J
DC output for position feedback			
1 current output: Terminals 61 and 62		2-wire connection	
Rated signal range		4 ... 20 mA, short-circuit-proof	
Total operating range		3.6 ... 20.5 mA	
Auxiliary power U_{Aux}	+12 ... +35 V	+12 ... +30 V	+12 ... +30 V
External load R_B [kΩ]		≤ (U_{Aux} [V] – 12 V)/I [mA]	
Transmission error		≤ 0.3%	
Temperature influence effect		≤ 0.1%/10 K (≤ 0.1%/18 °F)	
Resolution		≤ 0.1%	
Residual ripple		≤ 1%	
For connecting to circuits with the following peak values	-	U_i = 30 V I_i = 100 mA P_i = 1 W	"ic": U_i = 30 V I_i = 100 mA "ec"/"t": U_n ≤ 30 V I_n ≤ 100 mA P_n ≤ 1 W
Effective internal capacitance C_i	-	11 nF	11 nF
Effective internal inductance L_i	-	Negligibly small	Negligibly small
Electrical isolation	Electrically isolated from the alarm option and safely isolated from the basic device		
Test voltage	840 V DC, 1 s		

© Siemens 2020

Inductive Limit Switches (ILS)	**Without explosion protection suitable for Ex d** **6DR4004-8G**	**With explosion protection Ex i** **6DR4004-6G**	**With explosion protection Ex i, Ex e, Ex t** **6DR4004-6G**
Limit transmitter with Inductive Limit Switches (ILS) and fault indicator			
2 Inductive Limit Switches (ILS)	•Digital output (limit transmitter) A1: Terminals 41 and 42 •Digital output (limit transmitter) A2: Terminals 51 and 52		
• Connection	2-wire system acc. to EN 60947-5-6 (NAMUR), for switching amplifier to be connected on load side		
• Signal state High (not addressed)	> 2.1 mA		
• Signal state Low (addressed)	< 1.2 mA		
• 2 Inductive Limit Switches (ILS)	Type SJ2-SN		
• Function	NC (normally closed) contact		
• Connecting to circuits with the following peak values	Rated voltage 8 V current consumption: ≥ 3 mA (limit value not addressed), ≤ 1 mA (limit value addressed)	U_i = 15 V I_i = 25 mA P_i = 64 mW	"ic": U_i = 15 V I_i = 25 mA "ec": U_n ≤ 15 V P_n ≤ 64 mW
Effective internal capacitance C_i	-	161 nF	161 nF
Effective internal inductance L_i	-	120 µH	120 µH
1 alarm output		Digital output: Terminals 31 and 32	
• Connection	On switching amplifier according to EN 60947-5-6: (NAMUR), U_{Aux} = 8.2 V, R_i = 1 kΩ		
• Signal state High (not addressed)	R = 1.1 kΩ	> 2.1 mA	> 2.1 mA
• Signal state Low (addressed)	R = 10 kΩ	< 1.2 mA	< 1.2 mA
• Auxiliary power U_{Aux}	U_{Aux} ≤ 35 V DC I ≤ 20 mA	-	-
• Connecting to circuits with the following peak values	-	U_i = 15 V I_i = 25 mA P_i = 64 mW	"ic"/"nL": U_i = 15 V I_i = 25 mA "ec": U_n ≤ 15 V P_n ≤ 64 mW
Effective internal capacitance C_i	-	5.2 nF	5.2 nF
Effective internal inductance L_i	-	Negligibly small	Negligibly small
Electrical isolation	The 3 outputs are electrically isolated from the basic device.		
Test voltage	840 V DC, 1 s		

© Siemens 2020

Technical specifications

Mechanic Limit Switches (MLS)	Without explosion protection suitable for Ex d 6DR4004-8K	With explosion protection Ex i 6DR4004-6K	With explosion protection Ex i, Ex e, Ex t 6DR4004-6K
Limit transmitter with mechanical switching contacts			
2 limit value contacts		• Digital output A1: Terminals 41 and 42 • Digital output A2: Terminals 51 and 52	
• Max. switching current AC/DC	4 A	-	-
• For connecting to circuits with the following peak values	-	U_i = 30 V I_i = 100 mA P_i = 750 mW	"ic": U_i = 30 V I_i = 100 mA "t": U_n = 30 V I_n = 100 mA
Effective internal capacitance C_i	-	Negligibly small	Negligibly small
Effective internal inductance L_i	-	Negligibly small	Negligibly small
• Max. switching voltage AC/DC	250 V/24 V	30 V DC	30 V DC
1 alarm output		Digital output: Terminals 31 and 32	
• Connection	On switching amplifier according to EN 60947-5-6: (NAMUR), U_{Aux} = 8.2 V, R_i = 1 kΩ		-
• Signal state High (not addressed)	R = 1.1 kΩ	> 2.1 mA	> 2.1 mA
• Signal state Low (addressed)	R = 10 kΩ	< 1.2 mA	< 1.2 mA
• Auxiliary power	U_{Aux} ≤ 35 V DC I ≤ 20 mA	-	-
• Connecting to circuits with the following peak values	-	U_i = 15 V I_i = 25 mA P_i = 64 mW	"ic": U_i = 15 V I_i = 25 mA "t": U_n = 15 V I_n = 25 mA
Effective internal capacitance C_i	-	5.2 nF	5.2 nF
Effective internal inductance L_i	-	Negligibly small	Negligibly small
Electrical isolation	The 3 outputs are electrically isolated from the basic device.		
Test voltage	3150 V DC, 2 s		
Operating conditions altitude	Max. 2 000 m above sea level At altitudes greater than 2 000 m above sea level, use a suitable power supply	-	-

Analog Input Module (AIM)	Without explosion protection 6DR4004-8F	With explosion protection Ex i 6DR4004-6F	With explosion protection Ex i, Ex e, Ex t 6DR4004-6F
	The Analog Input Module (AIM) 6DR4004-6F and -8F is required to connect a Non-Contacting Sensor (NCS) or Position Transmitter 6DR4004-1ES to -4ES. Potentiometers of other types with resistance values between 3 and 20 kΩ can also be connected. In non-explosion-proof applications, 4 ... 20 mA and 0 ... 10 V signals can also be processed.		
R-potentiometer			
• Peak values when powered by the base unit with PA (6DR55) or with FF communication (6DR56)	U_{max} = 5 V	U_o = 5 V I_o = 75 mA static I_o = 160 mA momentary P_o = 120 mW C_o = 1 µF L_o = 1 mH	U_{max} = 5 V
• Peak values when supplied by other basic devices (6DR50/1/2/3/9)	U_{max} = 5 V	U_o = 5 V I_o = 100 mA P_o = 33 mW C_o = 1 µF L_o = 1 mH	U_{max} = 5 V
Signal 20 mA			
• Rated signal range	0 ... 20 mA	-	-
• Internal load R_B	200 Ω	-	-
• Static destruction limit	40 mA	-	-
Signal 10 V			
• Rated signal range	0 ... 10 V	-	-
• Internal resistance R_i	25 kΩ	-	-
• Static destruction limit	20 V	-	-
Supply and signal circuits	Electrically connected to the basic device		

© Siemens 2020

NCS sensor	**Without explosion protection**	**With explosion protection Ex i, Ex e**	**With explosion protection Ex t**
	6DR4004-8N*	**6DR4004-6N***	**6DR4004-6N***
Position range			
• Linear actuator 6DR4004-.N.20	3 ... 14 mm (0.12 ... 0.55")		
• Linear actuator 6DR4004-.N.30	10 ... 130 mm (0.39 ... 5.12"); up to 200 mm (7.87") on request		
• Part-turn actuator	30° ... 100°		
Linearity for NCS sensor and internal NCS module 6DR4004-5L/-5LE (after correction by means of positioner)	± 1%		
Hysteresis for NCS sensor and NCS module 6DR4004-5L/-5LE	± 0.2%		
Temperature influence (range: Rotation angle 120° or stroke 14 mm)	≤ 0.1%/10 K (≤ 0.1%/18 °F) for -20 ... +90 °C (-4 ... +194 °F) ≤ 0.2%/10 K (≤ 0.2%/18 °F) for -40 ... -20 °C (-40 ... -4 °F)		
Climatic class	According to IEC EN 60721-3		
• Storage	1K5, but -40 … +90 °C (1K5, but -40 … +194 °F)		
• Transport	2K4, but -40 … +90 °C (2K4, but -40 … +194 °F)		
Continuous working temperature	-40 °C … +90 °C (-40 °F ... +194 °F)	-	-
Vibration resistance			
• Harmonic oscillations (sine) according to IEC 60068-2-6	3.5 mm (0.14"), 2 ... 27 Hz, 3 cycles/axis 98.1 m/s^2 (321.84 ft/s^2), 27 ... 300 Hz, 3 cycles/axis		
• Bumping according to IEC 60068-2-29	300 m/s^2 (984 ft/s^2), 6 ms, 4 000 shocks/axis		
Degree of protection	IP68 according to IEC/EN 60529; Type 4X according to UL 50 E		
For connecting to circuits with the following peak values	-	U_i = 5 V I_i = 160 mA P_i = 120 mW	U_i = 5 V
Effective internal capacitance C_i	-	110 nF + 110 nF per meter of connecting cable	110 nF + 110 nF per meter of connecting cable
Effective internal inductance L_i	-	270 µH + 6.53 µH per meter of connecting cable	270 µH + 6.53 µH per meter of connecting cable
Explosion protection according to ATEX/IECEx	-	Intrinsic safety Ex i: II 2 G Ex ia IIC T6/T4 Gb	Intrinsic safety Ex i: II 3 G Ex ic IIC T6/T4 Gc Non-sparking Ex t: II 3 G Ex ec IIC T6/T4 Gc
Explosion protection according to FM	-	Intrinsic safety Ex i: IS, Class I, Division 1, ABCD IS, Class I, Zone 1, AEx ib, IIC	Non-sparking Ex t: NI, Class I, Division 2, ABCD NI, Class I, Zone 2, AEx ec, IIC
Permissible ambient temperature			
• ATEX/IECEx	-	T4: -40 ... +90 °C (-40 ... +194 °F) T6: -40 ... +70 °C (-40 ... +158 °F)	
• FM/CSA	-	T4: -40 ... +85 °C (-40 ... +185 °F) T6: -40 ... +70 °C (-40 ... +158 °F)	

© Siemens 2020

Technical specifications

Explosion protection

1	2	3	4	5	6	7	-	8	9	10	11	12	-	13	14	15	16	-				
6	D	R	5	*a*	*y*	*b*	-	0	*c*	*d*	*e*	*f*	-	*g*	*	*	*h*	-	*Z*	*j*	*j*	*j*

Upper row: Order position of Article No.; lower line in color: Article No. with variable positions

6DR5ayb-	0cdef-	g**h-	Z jjj
a (version) = 0, 2, 5, 6	c (explosion protection) = E, D, F, G, K	g = 0, 2, 6, 7, 8	jjj (-Z order code) = = A20, A40, C20, D53, D54, D55, D56, D57, F01, K**, L1A, M40, R**, S**, Y** * = any character
y (actuator) = 1, 2	d (thread) = G, N, M, P, R, S	h (pressure gauge block) = 0, 1, 2, 3, 4, 9	jjj (-Z order code) = = A20, A40, C20, D53, D54, D55, D56, D57, F01, K**, L1A, M40, R**, S**, Y** * = any character
b (enclosure) = 0, 1, 2, 3	e (limit monitor) = 0, 1, 2, 3, 9		jjj (-Z order code) = = A20, A40, C20, D53, D54, D55, D56, D57, F01, K**, L1A, M40, R**, S**, Y** * = any character
	f (option module) = 0, 1, 2, 3		jjj (-Z order code) = = A20, A40, C20, D53, D54, D55, D56, D57, F01, K**, L1A, M40, R**, S**, Y** * = any character

Type of protection 6DR5ayb-*cdef-g*Ah-Zjjj	Ex marking ATEX-IECEx	Ex marking FM-CSA
Intrinsic safety • For c = E and b = 0	II 2 G Ex ia IIC T6/T4 Gb II 3 G Ex ic IIC T6/T4 Gc	Cl I Zn 1 AEx ib IIC Gb Cl I Zn 1 Ex ib IIC Gb IS Cl I Div 1 Gp A-D
Flameproof enclosure and dust explosion protection by enclosure • For c = E and b = 5, 6	II 2 G Ex db IIC T6/T4 Gb II 2 D Ex tb IIIC T100°C Db	FM Cl I Zn 1 AEx db IIC Gb XP Cl I Div 1 Gp A-D CSA Cl I Zn 1 Ex db IIC Gb XP Cl I Div 1 Gp C-D FM + CSA Zn 21 AEx tb IIIC T100°C Db Zn 21 Ex tb IIIC T100°C Db DIP Cl II, III Div 1 Gp E-G
Intrinsic safety • For c = E and b = 1, 2, 3	II 2 G Ex ia IIC T6/T4 Gb II 3 G Ex ic IIC T6/T4 Gc II 2 D Ex ia IIIC T130°C Db	Cl I Zn 1 AEx ib IIC Gb Cl I Zn 1 Ex ib IIC Gb Zn 21 AEx ib IIIC, T130°C Db Zn 21 Ex ib IIIC, T130°C Db IS Cl I, II, III Div 1 Gp A-G
Increased safety (non-incendive NI) • For c = G and b = 1, 2, 3, 5, 6	II 3 G Ex ec IIC T6/T4 Gc	Cl I Zn 2 AEx nA IIC Gc Cl I Zn 2 Ex nA IIC Gc NI Cl I Div 2 Gp A-D
Increased safety (non-incendive NI) and dust ignition protection by enclosure • For c = D and b = 1, 2, 3	II 2 D Ex tb IIIC T100°C Db II 3 G Ex ec IIC T6/T4 Gc	DIP Zn 21 AEx tb IIIC T100°C Db Zn 21 Ex tb IIIC T100°C Db DIP Cl II, III Div 1 Gp E-G NI: Cl I Zn 2 AEx nA IIC Gc Cl I Zn 2 Ex nA IIC Gc NI Cl I Div 2 Gp A-D

© Siemens 2020

Type of protection 6DR5ayb-*cdef-g*Ah-Zjjj	Ex marking ATEX-IECEx	Ex marking FM-CSA
Intrinsic safety, increased safety (non-incendive NI) and dust ignition protection by enclosure		
• For c = K and b = 1, 2, 3, 5, 6 • 6DR4004-1ES Position Transmitter (Potentiometer) • 6DR4004-2ES Position Transmitter (NCS) • 6DR4004-3ES Position Transmitter (NCS, ILS) • 6DR4004-4ES Position Transmitter (NCS, MLS)	II 2 G Ex ia IIC T6/T4 Gb II 3 G Ex ic IIC T6/T4 Gc II 3 G Ex ec IIC T6/T4 Gc II 2 D Ex ia IIIC T130°C Db II 2 D Ex tb IIIC T100°C Db	FM Cl I Zn 1 AEx ib IIC T6/T4 Gb IS Cl I Div 1, Gp A-D Cl I Zn 2 AEx ec IIC T6/T4 Gb NI Cl I Div 2 Gp A-D Zn 21 AEx ib IIIC Db T130°C IS Cl I, II, III Div 1 Gp A-G Zn 21 AEx tb IIIC T100°C Db DIP Cl II, III Div 1 Gp E-G CSA Ex ia IIC T6/T4 Gb Ex ic IIC T6/T4 Gc IS Cl I Div 1, 2 Gp A-D Ex ec IIC T6/T4 Gc Cl I Div 2 Gp A-D Ex ia IIIC T130°C Db Cl II, III Div 1 Gp E-G Ex tb IIIC T100°C Db Cl II, III Div 1 Gp E-G
Intrinsic safety and increased safety (non-incendive NI)		
• For c = F and b = 1, 2, 3, 5, 6	II 2 G Ex ia IIC T6/T4 Gb II 3 G Ex ic IIC T6/T4 Gc II 3 G Ex ec IIC T6/T4 Gc II 2 D Ex ia IIIC T130°C Db	FM Cl I Zn 1 AEx ib IIC T6/T4 Gb IS Cl I Div 1, Gp A-D Cl I Zn 2 AEx ec IIC T6/T4 Gb NI Cl I Div 2 Gp A-D Zn 21 AEx ib IIIC Db T130°C IS Cl I, II, III Div 1 Gp A-G CSA Ex ia IIC T6/T4 Gb Ex ic IIC T6/T4 Gc IS Cl I Div 1, 2 Gp A-D Ex ec IIC T6/T4 Gc Cl I Div 2 Gp A-D Ex ia IIIC T130°C Db Cl II, III Div 1 Gp E-G
• 6DR4004-6N**-0-*** Non-Contacting Sensor (NCS)	II 2 G Ex ia IIC T6/T4 Gb II 3 G Ex ic IIC T6/T4 Gc II 2 D Ex ia IIIC T130°C Db II 3 G Ex ec IIC T6/T4 Gc	IS Cl I Zn 1 AEx ib IIC Gb Cl I Zn 1 Ex ib IIC Gb Zn 21 AEx ib IIIC T130°C Db Zn 21 Ex ib IIIC T130°C Db IS Cl I, II, III Div 1 Gp A-G NI Cl I Zn 2 AEx nA IIC Gc Cl I Zn 2 Ex nA IIC Gc NI Cl I Div 2 Gp A-D

Maximum permissible ambient temperature ranges	Temperature class T4	Temperature class T6
Positioners		
• 6DR5ayb-0cdef-g*Ah-Z jjj	-30 °C ≤ Ta ≤ +80 °C	-30 °C ≤Ta ≤ +50 °C
• 6DR5ayb-0cdef-g*Ah-Z M40	-40 °C ≤ Ta ≤ +80 °C	-40 °C ≤Ta ≤ +50 °C
• 6DR5ayb-0cdef-g*Ah-Z jjj for a = 0, 2 and f = 0, 2	-30 °C ≤ Ta ≤ +80 °C	-30 °C ≤Ta ≤ +60 °C
• 6DR5ayb-0cdef-g*Ah-Z M40 for a = 0, 2 and f = 0, 2	-40 °C ≤ Ta ≤ +80 °C	-40 °C ≤Ta ≤ +60 °C
Analog Output Module (AOM)		
• Installed: 6DR5ayb-0cdef-g.Ah-Z ... for f = 1, 3 • Can be retrofitted 6DR4004-6J	-30 °C ≤ Ta ≤ +80 °C	-
• Installed and can be retrofitted: 6DR5ayb-0cdef-g*Ah-Z M40 for f = 1, 3	-40 °C ≤ Ta ≤ +80 °C	-
Position Transmitter		
• Non-contacting sensor (NCS) 6DR4004-6N**-0-***	-40 °C ≤ Ta ≤ +90 °C	-40 °C ≤Ta ≤ +70 °C
• Position Transmitter (potentiometer) 6DR4004-1ES	-40 °C ≤ Ta ≤ +90 °C	-40 °C ≤Ta ≤ +60 °C
• Position Transmitter (NCS) 6DR4004-2ES	-40 °C ≤ Ta ≤ +90 °C	-40 °C ≤Ta ≤ +50 °C
• Position Transmitter (NCS, ILS) 6DR4004-3ES	-40 °C ≤ Ta ≤ +90 °C	-40 °C ≤Ta ≤ +50 °C
• Position Transmitter (NCS, MLS) 6DR4004-4ES	-40 °C ≤ Ta ≤ +90 °C	-40 °C ≤Ta ≤ +50 °C

© Siemens 2020

Technical specifications

Booster

Operating conditions	
Climatic class	According to IEC EN 60721-3
• Storage	1K5, but -40 … +80 °C (1K5, but -40 … +176 °F)
• Transport	2K4, but -40 … +80 °C (2K4, but -40 … +176 °F)
Vibration resistance	
• Harmonic oscillations	According to ISA-S75.13
• Bumping (half-sine) according to EN 60068-2-27/02.2010	150 m/s² (492 ft/s²), 6 ms, 1 000 shocks/axis
Design	
Booster weight	
• Single-acting	
- Optional module for standard enclosure	2.9 kg (6.5 lb)
- Installed with polycarbonate enclosure	4.0 kg (8.8 lb)
- Optional module for flameproof aluminum enclosure	3.3 kg (7.3 lb)
- Installed with flameproof aluminum enclosure	7.9 kg (17.4 lb)
• Double-acting	
- Optional module for standard enclosure	4.3 kg (9.4 lb)
- Installed with polycarbonate enclosure	5.3 kg (11.7 lb)
- Optional module for flameproof aluminum enclosure	4.7 kg (10.4 lb)
- Installed with flameproof aluminum enclosure	9.3 kg (20.5 lb)
Connections	
• Pneumatic	½-14 NPT or G½
Pneumatic data	
Auxiliary power (inlet air)	Compressed air, carbon dioxide (CO_2), nitrogen (N_2), noble gases or cleaned natural gas
• Pressure	1.4 ... 7 bar (20.3 ... 101.5 psi)
• Inlet air	According to ISO 8573-1
• Air consumption	1.2 x 10^{-2} Nm^3/h (0.007SCFM)
Pressure gauge	Stainless steel enclosure MPa, bar, psi Type of protection IP54
Flow capacity	Cv = 2.0

© Siemens 2020

Selection and ordering data

	Article No.	Order code
SIPART PS2 electropneumatic positioner ↗	**6DR5** ■■■ - 0 ■■■ - 0 ■■■ ■■■	

↗ Click on the Article No. for the online configuration in the PIA Life Cycle Portal.

Version		
4 ... 20 mA	0	
4 ... 20 mA, HART	1	1)
4 ... 20 mA, HART, (3-, 4-wire)	2	
4 ... 20 mA (3-/4-wire)	3	N
PROFIBUS PA	5	
FOUNDATION Fieldbus	6	
Without electronics (for 19" remote variant)	9	
Actuator		
Single-acting	1	
Double-acting	2	
Enclosure		
Polycarbonate, glass-fiber reinforced[2)]	0	
Stainless steel, without inspection window, 1.4581	2	
Aluminum, AlSi12	3	
Type of protection (Ex)		
Without explosion protection	N	
Increased safety (Ex e)[3)], Dust ignition protection by enclosure (Ex t)[3)]	D	
Intrinsic safety (Ex i)	E	
Intrinsic safety (Ex i), Increased safety (Ex e)[3)]	F	
Increased safety (Ex e)[3)]	G	
Intrinsic safety (Ex i), Increased safety (Ex e)[3)], Dust ignition protection by enclosure (Ex t)[3)]	K	
Connection thread electric/ pneumatic		
M20x1.5/G¼	G	
½-14 NPT / ¼-18 NPT	N	
M20x1.5/¼-18 NPT	M	
½-14 NPT / G¼	P	
M12 device plug (A coding) for electronics[4)] / G¼ The M12 cable socket can be ordered separately with 6DR4004-5A.	R	
M12 device plug (A coding) for electronics[4)] / ¼-18 NPT The M12 cable socket can be ordered separately with 6DR4004-5A	S	

	Article No.	Order code
SIPART PS2 electropneumatic positioner	**6DR5** ■■■ - 0 ■■■ - 0 ■■■ ■■■	

Limit monitor Including 2nd cable gland		
None	0	
Digital I/O Module (DIO), 1 digital input, 3 digital outputs (2 limits min. or max., 1 fault indicator). Device plug M12 optionally orderable with -Z D55.	1	
Inductive Limit Switches (ILS), 2 inductive limit switches and 1 digital output (DQ) Device plug M12 optionally orderable with -Z D56.	2	
Mechanic Limit Switches (MLS), 2 mechanical limit switches and 1 digital output (DQ). Not applicable for natural gas applications. Device plug M12 optionally orderable with -Z D57.	3	
Internal NCS module for non-contacting position detection for actuators > 14 mm. The internal position detection is not applied but can be ordered in addition with -Z K11.	9	L 1 A
Option modules Including 2nd cable gland		
None	0	
Analog Output Module (AOM), analog position feedback 4 ... 20 mA. Device plug M12 optionally orderable with -Z D53.	1	
Analog Input Module (AIM) to connect external position detection systems, e. g. NCS Sensor, Position Transmitter 6DR4004-1ES/2ES/3ES/4ES or other sensors. The internal position detection is not applied but can be ordered in addition with -Z K11. Device plug M12 optionally orderable with -Z D54.	2	
Analog Output Module (AOM) and Analog Input Module (AIM). The internal position detection is not applied but can be ordered in addition with -Z K11. Device plug M12 is not available.	3	
Brief instructions		
English/German/Chinese	A	
French/Italian/Spanish	B	
Version		
Standard / Fail Safe • Depressurizing the actuator in case of failure of electrical auxiliary power	A	
Fail in Place • Maintain position in case of failure of electrical and/or pneumatical auxiliary power	F	
Fail to Open • Pressurizing of the actuator in case of failure of electrical auxiliary power	G	

5

© Siemens 2020

Selection and ordering data

	Article No.	Order code		
SIPART PS2 electropneumatic positioner	**6DR5** ■■■ - 0 ■■■ - 0 ■■■		■■■	
Gauge block				
None		**0**		
With gauges made of plastic IP31 (MPa, bar)				
• Block made of aluminum, single-acting, G¼		**1**		
• Block made of aluminum, double-acting, G¼		**2**		
With gauges made of plastic IP31 (MPa / psi)				
• Block made of aluminum, single-acting, ¼-18 NPT		**3**		
• Block made of aluminum, double-acting, ¼-18 NPT		**4**		
With gauges made of metal IP44 (MPa, bar, psi)				
• Block made of aluminum, single-acting, G¼		**9**	**R 1**	**A**
• Block made of aluminum, double-acting, G¼		**9**	**R 2**	**A**
• Block made of aluminum, single-acting, ¼-18 NPT		**9**	**R 1**	**B**
• Block made of aluminum, double-acting, ¼-18 NPT		**9**	**R 2**	**B**
With gauges made of stainless steel IP54 (MPa, bar, psi)				
• Block made of stainless steel 316, single-acting, G¼		**9**	**R 1**	**C**
• Block made of stainless steel 316, double-acting, G¼		**9**	**R 2**	**C**
• Block made of stainless steel 316, single-acting, ¼-18 NPT		**9**	**R 1**	**D**
• Block made of stainless steel 316, double-acting, ¼-18 NPT		**9**	**R 2**	**D**
* Can be ordered on request:		*	*	*
Gauge block 316 with gauge IP65, 316L (MPa, bar, psi)				
Venting gauge block				
Depressurizing of Y2 on compressed air failure with gauges made of metal IP44 (MPa, bar, psi). The double-acting actuator with springs moves into the safety position.				
• Block made of aluminum, double-acting, G¼		**9**	**R 2**	**E**
• Block made of aluminum, double-acting, ¼-18 NPT		**9**	**R 2**	**F**
Booster (Cv = 2)				
Aluminum with gauges made of metal IP44 (MPa, bar, psi)				
• Single-acting, G½		**9**	**R 1**	**J**
• Double-acting, G½		**9**	**R 2**	**J**
• Single-acting, ½-14 NPT		**9**	**R 1**	**K**
• Double-acting, ½-14 NPT		**9**	**R 2**	**K**

1) Explosion protection Ex i only available in connection with order option -Z P01/P02

2) Only for type of protection Ex i

3) Impact energy on inspection window max. 2 joule for aluminum enclosure 6DR5..3.

4) Device plug M12 mounted and electrically connected in versions 6DR50.., 6DR51.., 6DR55.. and 6DR56..

Options	Order code
Append suffix "**-Z**" to Article No., add order code and plain text.	
Stainless steel sound absorber Standard with stainless steel enclosures	**A40**
Functional Safety (SIL 2) for 6DR5.1* only (single-acting positioner) Device suitable for use according to IEC 61508 and IEC 61511.	**C20**
M12 device plug (D coding) The M12 cable socket can be ordered separately with 6DR4004-5D.	
Connected with Analog Output Module (AOM)	**D53**
Connected with Analog Input Module (AIM)	**D54**
Connected with Digital I/O Module (DIO)	**D55**
Connected with Inductive Limit Switches (ILS)	**D56**
Connected with Mechanic Limit Switches (MLS)	**D57**
Fail in Place Maintain position in case of failure of electrical and/or pneumatical auxiliary power	**F01**
Optimized control behavior for small actuators (< 200 cm³)	**K10**
Additional internal position detection by means of a potentiometer	**K11**
Pneumatic terminal strip made of stainless steel 316	**K18**
Interface according to VDI/VDE 3847 For single- and double-acting, with CATS (Clean Air To Spring) only for single-acting. Not for flameproof enclosures.	**K20**
Operation with natural gas Device is optimized for natural gas operation. Exhaust air (natural gas) cannot be dissipated collectively.	**K50**
Permitted ambient temperature during operation -40 ... 80 °C (-40 ... +176 °F) For 6DR5..1*, 6DR5..2*, 6DR5..3*: Lid without inspection window	**M40**
Pressure sensor supported monitoring/diagnostics	
Monitoring of the device/user-specific min./max. supply pressure Pz. Hold position on demand. Messages according to Namur NE107.	**P01**
Monitoring of the device/user-specific min./max. supply pressure PZ. Hold position on demand. Valve Signature, Partial Stroke Test, monitoring of leakage and positioning pressure (triggered), positioning pressure limitation for single acting. Messages according to Namur NE107.	**P02**
Marine approval	
DNV GL (Det Norske Veritas & Germanischer Lloyd)	**S10**
LR (Lloyds Register)	**S11**
BV (Bureau Veritas)	**S12**
ABS (American Bureau of Shipping)	**S14**
KR (Korean Register of Shipping)	**S15**
CCS (China Classification Society)	**S16**
RINA (Registro Italiano Navale)	**S17**
TAG plate made of stainless steel, 3-line Text line 1: Plain text from Y17 Text line 2: Plain text from Y15 Text line 3: Plain text from Y16	**A20**
Measuring point description Input field: Max. 16 characters for HART, max. 32 characters for PROFIBUS PA, FOUNDATION Fieldbus and 4 ... 20 mA; specify in plain text	**Y15**

© Siemens 2021

Options	Order code
Measuring point text Input field: Max. 24 characters for HART, max. 32 characters for PROFIBUS PA, FOUNDATION Fieldbus and 4 ... 20 mA; specify in plain text	**Y16**
Measuring point number (TAG no.) Input field: Max. 32 characters; specify in plain text	**Y17**
Preset bus address Input field: Specify in plain text (for 6DR55.. and 6DR56.. only)	**Y25**
Customer-specific parameter setting Input field: Specify in plain text	**Y30**
Special design / Product Variant Request (PVR) Input field: Specify order number from PVR clarification in plain text	**Y99**
Examples: • Conformal Coating / Tropicalization • Gauge block with IP65 gauge • SIPART PS2 for part-turn applications up to 180°	 **VP001** **VP002** **VP003**
Creation of a "Product Variant Request" is a prerequisite.	

Rating plate and TAG plate made of stainless steel

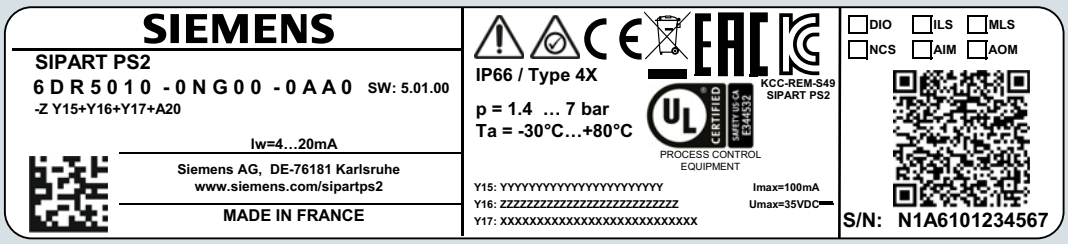

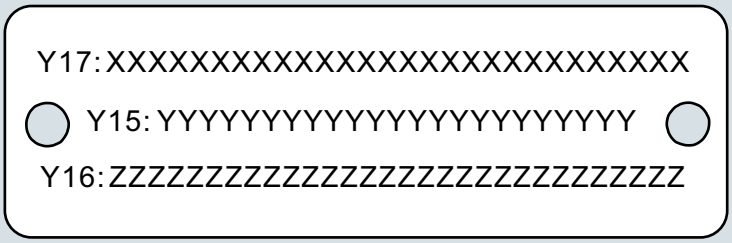

© Siemens 2020

Selection and ordering data

	Article No.	Order code
SIPART PS2 electropneumatic positioner, in flameproof enclosure ↗	**6DR5**	
	■■■ - 0 ■■■■ - 0 ■■■	■■■

↗ Click on the Article No. for the online configuration in the PIA Life Cycle Portal.

Version																
4 ... 20 mA	0															
4 ... 20 mA, HART[1)]	1															
4 ... 20 mA, HART, (3-, 4-wire)	2															
4 ... 20 mA (3-/4-wire)	3															
PROFIBUS PA	5															
FOUNDATION Fieldbus	6															
Without electronics (for 19" remote variant)	9															
Actuator																
Single-acting		1														
Double-acting		2														
Enclosure																
Aluminum, flameproof, AlSi12			5													
Stainless steel, 316L, flameproof, 1.4409			6													
Type of protection (Ex)																
Without explosion protection					N											
Flameproof enclosure (Ex d), Dust ignition protection by enclosure (Ex t)					E											
Intrinsic safety (Ex i), increased safety (Ex e)					F											
Increased safety (Ex e)					G											
Intrinsic safety (Ex i), Increased safety (Ex e), Dust ignition protection by enclosure (Ex t)					K											
Flameproof enclosure (Ex d), Dust ignition protection by enclosure (Ex t), Intrinsic safety (Ex i)					P											
Connection thread electric/ pneumatic																
M20x1.5/G¼						G										
½-14 NPT / ¼-18 NPT						N										
M20x1.5/¼-18 NPT						M										
½-14 NPT / G¼						P										
M25x1.5/G¼						Q										

	Article No.	Order code
SIPART PS2 electropneumatic positioner, in flameproof enclosure	**6DR5**	
	■■■ - 0 ■■■■ - 0 ■■■	■■■

Limit monitor																
None						0										
Digital I/O Module (DIO), 1 digital input, 3 digital outputs (2 limits min. or max., 1 fault indicator).						1										
Inductive Limit Switches (ILS), 2 inductive limit switches and 1 digital output (DQ).						2										
Mechanic Limit Switches (MLS), 2 mechanical limit switches and 1 digital output (DQ). Not applicable for natural gas applications.						3										
Internal NCS module for non-contacting position detection for actuators > 14 mm. The internal position detection is not applied but can be ordered in addition with -Z K11.						9								L	1	A
Option modules																
None							0									
Analog Output Module (AOM), analog position feedback 4 ... 20 mA.							1									
Analog Input Module (AIM) to connect external position detection systems, e. g. NCS Sensor, Position Transmitter 6DR4004-1ES/2ES/3ES/4ES or other sensors. The internal position detection is not applied but can be ordered in addition with -Z K11.							2									
Analog Output Module (AOM) and Analog Input Module (AIM). The internal position detection is not applied but can be ordered in addition with -Z K11.							3									
Brief instructions																
English/German/Chinese									A							
French/Italian/Spanish									B							
Version																
Standard / Fail Safe • Depressurizing the actuator in case of failure of electrical auxiliary power										A						
Fail in Place • Maintain position in case of failure of electrical and/or pneumatical auxiliary power										F						
Fail to Open • Pressurizing of the actuator in case of failure of electrical auxiliary power										G						

5

5/22 Siemens FI 01 · 2021

© Siemens 2021

	Article No.	Order code		
SIPART PS2 electropneumatic positioner, in flameproof enclosure	**6DR5** ■■■ - 0 ■■■ - 0 ■■■		■■■	
Gauge block				
None		**0**		
With gauges made of plastic IP31 (MPa, bar)				
• Block made of aluminum, single-acting, G¼		**1**		
• Block made of aluminum, double-acting, G¼		**2**		
With gauges made of plastic IP31 (MPa / psi)				
• Block made of aluminum, single-acting, ¼-18 NPT		**3**		
• Block made of aluminum, double-acting, ¼-18 NPT		**4**		
With gauges made of metal IP44 (MPa, bar, psi)				
• Block made of aluminum, single-acting, G¼		**9**	**R 1**	**A**
• Block made of aluminum, double-acting, G¼		**9**	**R 2**	**A**
• Block made of aluminum, single-acting, ¼-18 NPT		**9**	**R 1**	**B**
• Block made of aluminum, double-acting, ¼-18 NPT		**9**	**R 2**	**B**
With gauges made of stainless steel IP54 (MPa, bar, psi)				
• Block made of stainless steel 316, single-acting, G¼		**9**	**R 1**	**C**
• Block made of stainless steel 316, double-acting, G¼		**9**	**R 2**	**C**
• Block made of stainless steel 316, single-acting, ¼-18 NPT		**9**	**R 1**	**D**
• Block made of stainless steel 316, double-acting, ¼-18 NPT		**9**	**R 2**	**D**
* Can be ordered on request:		*	*	*
Gauge block 316 with gauge IP65, 316L (MPa, bar, psi)				
Venting gauge block				
Depressurizing of Y2 on compressed air failure with gauges made of metal IP44 (MPa, bar, psi). The double-acting actuator with springs moves into the safety position.				
• Block made of aluminum, double-acting, G¼		**9**	**R 2**	**E**
• Block made of aluminum, double-acting, ¼-18 NPT		**9**	**R 2**	**F**
Booster (Cv = 2)				
Aluminum with gauges made of metal IP44 (MPa, bar, psi)				
• Single-acting, G½		**9**	**R 1**	**P**
• Double-acting, G½		**9**	**R 2**	**P**
• Single-acting, ½-14 NPT		**9**	**R 1**	**Q**
• Double-acting, ½-14 NPT		**9**	**R 2**	**Q**

[1] Explosion protection Ex i only available in connection with order option -Z P01/P02

Options	Order code
Append suffix "**-Z**" to Article No., add order code and plain text.	
Functional Safety (SIL 2) for 6DR5.1* (only single-acting positioner) Device suitable for use according to IEC 61508 and IEC 61511.	**C20**
Fail in Place Maintain position in case of failure of electrical and/or pneumatical auxiliary power	**F01**
Optimized control behavior for small actuators (< 200 cm³)	**K10**
Additional internal position detection by means of a potentiometer	**K11**
Pneumatic terminal strip made of stainless steel 316	**K18**
Operation with natural gas Device is optimized for natural gas operation. Exhaust air (natural gas) cannot be dissipated collectively.	**K50**
Permitted ambient temperature during operation -40 ... 80 °C (-40 ... +176 °F) For 6DR5..1*, 6DR5..2*, 6DR5..3*: Lid without inspection window	**M40**
Pressure sensor supported monitoring/ diagnostics	
Monitoring of the device/user-specific min./max. supply pressure Pz. Hold position on demand. Messages according to Namur NE107.	**P01**
Monitoring of the device/user-specific min./max. supply pressure PZ. Hold position on demand. Valve Signature, Partial Stroke Test, monitoring of leakage and positioning pressure (triggered), positioning pressure limitation for single acting. Messages according to Namur NE107.	**P02**
Marine approval	
DNV GL (Det Norske Veritas & Germanischer Lloyd)	**S10**
LR (Lloyds Register)	**S11**
BV (Bureau Veritas)	**S12**
ABS (American Bureau of Shipping)	**S14**
KR (Korean Register of Shipping)	**S15**
CCS (China Classification Society)	**S16**
RINA (Registro Italiano Navale)	**S17**
TAG plate made of stainless steel, 3-line Text line 1: Plain text from Y17 Text line 2: Plain text from Y15 Text line 3: Plain text from Y16	**A20**
Measuring point description Input field: Max. 16 characters for HART, max. 32 characters for PROFIBUS PA, FOUNDATION Fieldbus and 4 ... 20 mA; specify in plain text	**Y15**
Measuring point text Input field: Max. 24 characters for HART, max. 32 characters for PROFIBUS PA, FOUNDATION Fieldbus and 4 ... 20 mA; specify in plain text	**Y16**
Measuring point number (TAG no.) Input field: Max. 32 characters; specify in plain text	**Y17**
Preset bus address Input field: Specify in plain text (for 6DR55.. and 6DR56.. only)	**Y25**
Customer-specific parameter setting Input field: Specify in plain text	**Y30**
Special design / Product Variant Request (PVR) Input field: Specify order number from PVR clarification in plain text	**Y99**
Examples: • Conformal Coating / Tropicalization • Gauge block with IP65 gauge • SIPART PS2 for part-turn applications up to 180°	 **VP001** **VP002** **VP003**
Creation of a "Product Variant Request" is a prerequisite.	

5

© Siemens 2021

Selection and ordering data

Accessories

Sensors and modules for remote variants

NCS sensor

	Article No.
NCS sensor ↗ **For contact-free position detection (not for Ex d version)** ↗ Click on the Article No. for the online configuration in the PIA Life Cycle Portal.	**6DR4004-■N■■0**
Explosion protection	
Non-explosion-proof	**8**
In type of protection • Intrinsic safety • Non-sparking	**6**
Cable length	
6 m (19.68 ft)	**N**
20 m (65.67 ft)	**P**
40 m (131.23 ft)	**R**
Actuator type	
Linear actuator for stroke ≤ 14 mm (0.55 inch) Mounting is actuator-specific. Namur mounting kit 6DR4004-8V can be used as basis.	**2**
Linear actuator for strokes ≥ 14 ... 130 mm (0.55 ... 5.12 inch) Mounting is actuator-specific. For mounting, the mounting kit 6DR4004-8V or the long lever 6DR4004-8L in addition can be used, depending on the stroke.	**3**
Part-turn actuator, magnet holder made of anodized aluminum	**4**
A Namur mounting console can be ordered separately with 6DR4004-1D/-2D/-3D/-4D.	

Position Transmitter

- Review technical data for explosion protection (ATEX / IECEx / FM / CSA / not Ex d).
- SIPART PS2 externally mounted in protected area.
- Prerequisite: SIPART PS2 with integrated Analog Input Module (AIM) as order option or retrofit with 6DR4004-6F/-8F.
- Variant with cable and cable socket M12 stainless steel 6DR4004-5D on request

	Article No.
Position Transmitter (potentiometer) In aluminum enclosure with potentiometer, without electronics, without pneumatic block, for separate mounting of position detection on actuator.	**6DR4004-1ES**
Position Transmitter (NCS) Aluminum enclosure with non-contacting position detection (NCS), without electronics, without pneumatic block, for separate mounting of position detection on actuator.	**6DR4004-2ES**
Position Transmitter (NCS, ILS) In aluminum enclosure with non-contacting position detection (NCS) and inductive limit switches (ILS), without electronics, without pneumatic block, for separate mounting of position detection on actuator.	**6DR4004-3ES**
Position Transmitter (NCS, MLS) In aluminum enclosure with non-contacting position detection (NCS) and mechanic limit switches (MLS), without electronics, without pneumatic block, for separate mounting of position detection on actuator.	**6DR4004-4ES**

Additional accessories

	Article No.
Control unit for 3x SIPART PS2 4 ... 20 mA 19" control unit with 3x electronics, 2-wire, 4 ... 20 mA, for remote installation of the electronics for the SIPART PS2 positioner 6DR59* in the protected area (e.g. against radiation, dirt, temperature, etc.)	**A5E00151560**
Control unit for 5x SIPART PS2 PA 19" control unit including 5x PROFIBUS PA module, for remote installation of the electronics of the SIPART PS2 6DR59* in a protected area (e.g. against radiation, dirt, temperature, etc.), order 1x plug panel A5E00252845 or A5E00252830 separately.	**A5E00250501**
Control unit for 10x SIPART PS2 PA 19" control unit including 10x PROFIBUS PA module, for remote installation of the electronics of the SIPART PS2 6DR59* in a protected area (e.g. against radiation, dirt, temperature, etc.), order 2x plug panel A5E00252845 or A5E00252830 separately.	**A5E00250502**
Control unit for 15x SIPART PS2 PA 19" control unit including 15x PROFIBUS PA module, for remote installation of the electronics of the SIPART PS2 6DR59* in a protected area (e.g. against radiation, dirt, temperature, etc.), order 3x plug panel A5E00252845 or A5E00252830 separately.	**A5E00250503**
Plug panel for control unit (50) Plug panel (back panel) for 19" PROFIBUS PA control unit with Burndy 50 plug (50 pins) to connect a max. of 5 pcs of SIPART PS2 w/o electronic board (6DR59*). The Burndy 50 cable socket is already included in the scope of delivery. Order in addition: 1x for A5E00250501, 2x for A5E00250502 and 3x for A5E00250503.	**A5E00252845**
Plug panel for control unit (50+8) Plug panel (back panel) for 19" PROFIBUS PA control unit with Burndy 50 plug (50 pins) to connect a max. of 5 pcs of SIPART PS2 w/o electronic (6DR59*). Additional Burndy 8 plug (8 pins) to link communication between control units. The Burndy 50 cable socket is already included in the scope of delivery. Order in addition: 1x for A5E00250501, 2x for A5E00250502 and 3x for A5E00250503.	**A5E00252830**
Analog Input Module (AIM) For connecting external position detection systems to the SIPART PS2, for example Position Transmitter 6DR4004-1ES/2ES/3ES/4ES, NCS sensor or others.	
• With explosion protection	**6DR4004-6F**
• Without explosion protection	**6DR4004-8F**
Digital I/O Module (DIO) 1 digital input, 3 digital outputs (2 limits min. or max., 1 fault indicator)	
• With explosion protection	**6DR4004-6A**
• Without explosion protection	**6DR4004-8A**
Inductive Limit Switches (ILS) 2 inductive limit switches and 1 digital output (DQ)	
• With explosion protection	**6DR4004-6G**
• Without explosion protection	**6DR4004-8G**
Mechanic Limit Switches (MLS) 2 mechanical limit switches and 1 digital output (DQ). Not applicable for natural gas applications!	
• With explosion protection	**6DR4004-6K**
• Without explosion protection	**6DR4004-8K**
Analog Output Module (AOM) For analog position feedback 4 ... 20 mA	
• With explosion protection	**6DR4004-6J**
• Without explosion protection	**6DR4004-8J**

© Siemens 2020

	Article No.
Internal NCS module For non-contacting position detection, for installation in the SIPART PS2	
• Without explosion protection	**6DR4004-5L**
• With explosion protection	**6DR4004-5LE**
Overvoltage protection	
Overvoltage protection up to 6 kV for 2-wire, M20 x 1.5	**6DR4004-1LP**
Overvoltage protection up to 6 kV for 3-wire, M20 x 1.5	**6DR4004-2LP**
Overvoltage protection up to 6 kV for 4-wire, M20 x 1.5	**6DR4004-3LP**
Overvoltage protection up to 6 kV for PA/FF, M20 x 1.5	**6DR4004-4LP**
Cable socket M12 stainless steel	
A-coding, for cable mounting (0.25 ... 0.5 mm²). The cable socket can be connected to SIPART PS2 with M12 device plug.	**6DR4004-5A**
D-coding, for cable mounting (0.25 ... 0.5 mm²). The cable socket can be connected to SIPART PS2 with M12 device plug.	**6DR4004-5D**
Gauge block	
With gauges made of plastic IP31 (MPa, bar)	
• Block made of aluminum, single-acting, G¼	**6DR4004-1M**
• Block made of aluminum, double-acting, G¼	**6DR4004-2M**
With gauges made of plastic IP31 (MPa, psi)	
• Block made of aluminum, single-acting, ¼-18 NPT	**6DR4004-1MN**
• Block made of aluminum, double-acting, ¼-18 NPT	**6DR4004-2MN**
With gauges made of metal IP44 (MPa, bar, psi)	
• Block made of aluminum, single-acting, G¼	**6DR4004-1P**
• Block made of aluminum, double-acting, G¼	**6DR4004-2P**
• Block made of aluminum, single-acting, ¼-18 NPT	**6DR4004-1PN**
• Block made of aluminum, double-acting, ¼-18 NPT	**6DR4004-2PN**
With gauges made of stainless steel IP54 (MPa, bar, psi)	
• Block made of stainless steel 316, single-acting, G¼	**6DR4004-1Q**
• Block made of stainless steel 316, double-acting, G¼	**6DR4004-2Q**
• Block made of stainless steel 316, single-acting, ¼-18 NPT	**6DR4004-1QN**
• Block made of stainless steel 316, double-acting, ¼-18 NPT	**6DR4004-2QN**
Gauge block 316 with gauge IP65, 316L (MPa, bar, psi)	**Can be ordered on request**
Venting gauge block Depressurizing of Y2 on compressed air failure with gauges made of metal IP44 (MPa, bar, psi). The double-acting actuator with springs moves into the safety position.	
• Block made of aluminum, double-acting, G¼	**6DR4004-2RE**
• Block made of aluminum, double-acting, ¼-18 NPT	**6DR4004-2RF**
Booster (Cv = 2) Aluminum with gauges made of metal IP44 (MPa, bar, psi)	
For SIPART PS2 enclosure variants 6DR5..0/2/3* (non-flameproof enclosure)	
• Single-acting, G½	**6DR4004-1RJ**
• Double-acting, G½	**6DR4004-2RJ**
• Single-acting, ½-14 NPT	**6DR4004-1RK**
• Double-acting, ½-14 NPT	**6DR4004-2RK**
For SIPART PS2 enclosure variants 6DR5..5/6* (flameproof enclosure)	
• Single-acting, G½	**6DR4004-1RP**
• Double-acting, G½	**6DR4004-2RP**
• Single-acting, ½-14 NPT	**6DR4004-1RQ**
• Double-acting, ½-14 NPT	**6DR4004-2RQ**
Interface according to VDI/VDE 3847 For single- and double-acting, with CATS (Clean Air To Spring) only for single-acting, not for flameproof enclosures	**6DR4004-5PB**

	Article No.
Mounting kit for NAMUR part-turn actuators	
VDI/VDE 3845, with plastic coupling wheel, without mounting console	**6DR4004-8D**
VDI/VDE 3845, with stainless steel coupling, without mounting console	**TGX:16300-1556**
Console to mount the SIPART PS2, NCS sensor or Position Transmitter on NAMUR part-turn actuators VDI/VDE 3845	
• 80 x 30 x 20 mm (3.15 x 1.18 x 0.79 inch)	**6DR4004-1D**
• 80 x 30 x 30 mm (3.15 x 1.18 x 1.18 inch)	**6DR4004-2D**
• 130 x 30 x 30 mm (5.12 x 1.18 x 1.18 inch)	**6DR4004-3D**
• 130 x 30 x 50 mm (5.12 x 1.18 x 1.97 inch)	**6DR4004-4D**
Mounting kit for other part-turn actuators The following mounting consoles can be used together with the NAMUR part-turn actuator mounting kit 6DR4004-8D.	
SPX (DEZURIK) Power Rack, sizes R1, R1A, R2 and R2A	**TGX:16152-328**
Masoneilan Camflex II	**TGX:16152-350**
Fisher 1051/1052/1061, sizes 30, 40, 60 to 70	**TGX:16152-364**
Fisher 1051/1052, size 33	**TGX:16152-348**
Mounting kit for NAMUR linear actuators	
NAMUR linear actuator mounting kit with short lever arm (2 ... 35 mm (0.08 ... 1.38 inch))	**6DR4004-8V**
Lever arm for strokes of 35 ... 130 mm (1.38 ... 5.12 inch) without NAMUR mounting bracket	**6DR4004-8L**
Reduced mounting kit (as for 6DR4004-8V but without fixing angle and U-bracket), with short lever with up to 35 mm (1.38 inch) stroke	**6DR4004-8VK**
Reduced mounting kit (as for 6DR4004-8V but without fixing angle and U-bracket), with long lever > 35 mm (1.38 inch) stroke	**6DR4004-8VL**
Mounting console, stainless steel 316L Robust design to support extended loads like SIPART PS2 in an flameproof stainless steel 316L enclosure or as a variant with the booster. The console gets mounted and therefore supported by both stands of the actuator.	**6DR4004-8R**
Tapered roller made of stainless steel 316 for replacing the tapered roller made of plastic in the mounting kits 6DR4004-8V, -8VK, -8VL	**6DR4004-3N**
Terminal blocks made of stainless steel 316 for replacement of the aluminum terminal blocks in the 6DR4004-8V, -8VK and -8VL mounting kits	**6DR4004-3M**
Mounting kit for other linear actuators	
MASONEILAN type 87/88	**TGX:16152-1210**
MASONEILAN type 37/38, all sizes	**TGX:16152-1215**
Fisher type 657/667, sizes 30 ... 80	**TGX:16152-900**
Samson actuator type 3277 Yoke dimension = 101 mm (integrated connection without tube), not for Ex d	**6DR4004-8S**
Pneumatic terminal strip made of stainless steel 316 As spare part or to replace the pneumatic terminal strip made of aluminum	
• Single-acting, G¼	**6DR4004-1R**
• Double-acting, G¼	**6DR4004-2R**
• Single-acting, ¼-18 NPT	**6DR4004-1RN**
• Double-acting, ¼-18 NPT	**6DR4004-2RN**
Connection block For safety solenoid valve with extended mounting flange according to NAMUR	
• For mounting according to IEC 534-6	**6DR4004-1B**
• For SAMSON actuator (integrated mounting), see above[1)]	**6DR4004-1C**
SITRANS I100 isolating power supply HART With 24 V DC auxiliary power (see "SITRANS I supply units and isolation amplifiers")	**7NG4124-1AA00**

© Siemens 2020

Selection and ordering data

	Article No.
SITRANS I200 output isolator HART With 24 V DC auxiliary power (see "SITRANS I supply units and isolation amplifiers")	**7NG4131-0AA00**
HART modem with USB interface	**7MF4997-1DB**
SIPART PS2 / PS100 demo case	**6DR4004-5DE**

[1] Only together with 6DR4004-8S

© Siemens 2020

Dimensional drawings

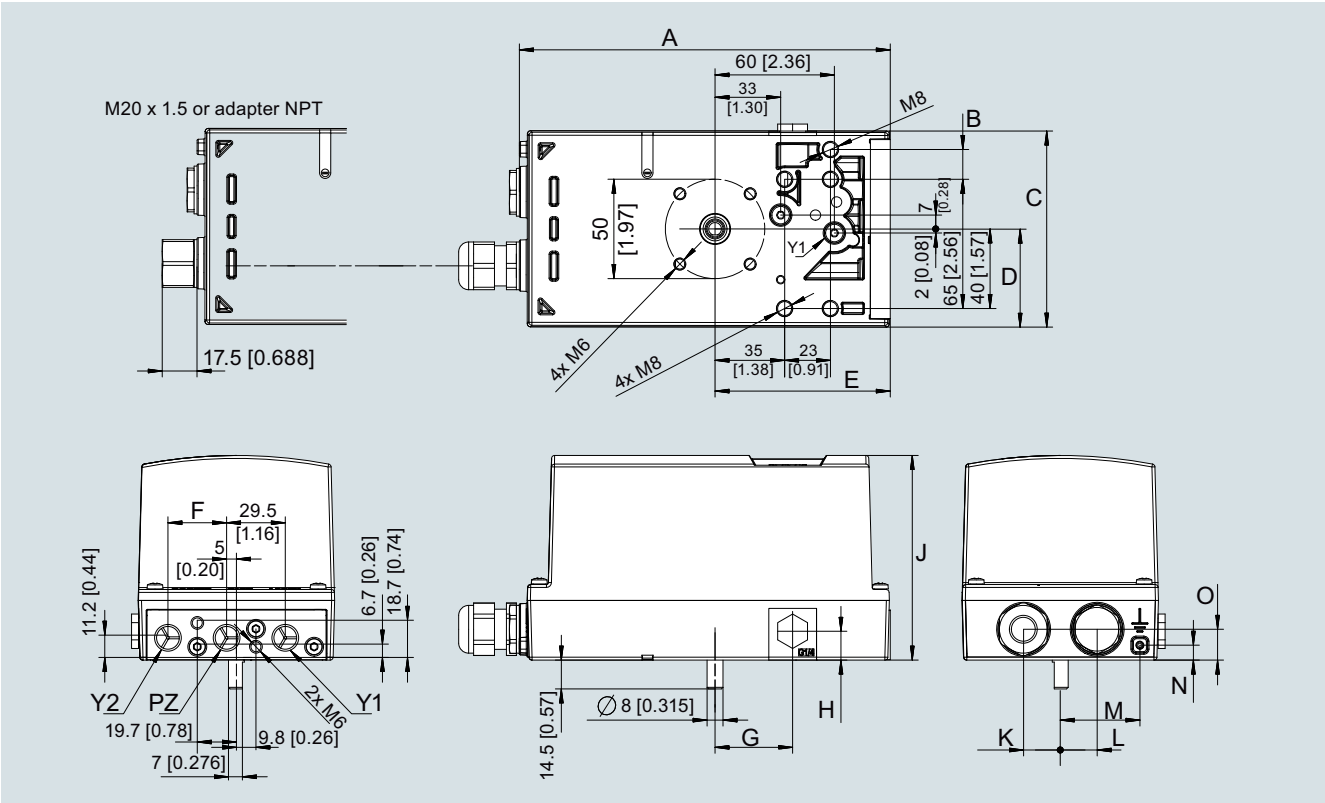

SIPART PS2, non-flameproof enclosure, dimensions in mm (inch)

Value	6DR5..0		6DR5..1	6DR5..2	6DR5..3	
	G¼	¼-18 NPT			G¼	¼-18 NPT
A	184.5 (7.26)	186.5 (7.34)	185 (7.28)	186.5 (7.34)	186.5 (7.34)	188.5 (7.42)
B	-		-	15 (0.59)	-	
C	95 (3.74)		84 (3.31)	99 (3.90)	98.6 (3.88)	
D	48 (1.89)		34.5 (1.36)	49.5 (1.95)	48.6 (1.91)	
E	88.5 (3.48)		88.8 (3.50)	88.5 (3.48)	88.8 (3.50)	
F[1)]	29.5 (1.16)		-	29.5 (1.16)	29.5 (1.16)	
G	39 (1.54)		44 (1.73)	39 (1.54)	39 (1.54)	
H	14.5 (0.57)		16 (0.63)	16 (0.63)	14.5 (0.57)	
J	96.6 (3.80)		96.6 (3.80)	98.5 (3.88)	103 (4.06)	
K	18.5 (0.73)		22 (0.87)	18.5 (0.73)	18.5 (0.73)	
L	18.5 (0.73)		7 (0.23)	18.5 (0.73)	18.5 (0.73)	
M	-		26.5	41.5	40	
N	-		7.5	7.5	7.5	
O	14.5 (0.57)		14.5 (0.57)	14.5 (0.57)	15.5 (0.61)	
P	> 150 (5.91) Adhere to this minimum clearance P for service and maintenance above the lid.					

1) Dimension applies only to double-acting drives

6DR5..0	Polycarbonate enclosure; dimensions with pneumatic connection G¼ or ¼-18 NPT
6DR5.11	Aluminum enclosure, only single-acting
6DR5..2	Stainless steel enclosure, without inspection window
6DR5..3	Aluminum enclosure; dimensions with pneumatic connection G¼ or ¼-18 NPT

© Siemens 2020

Dimensional drawings

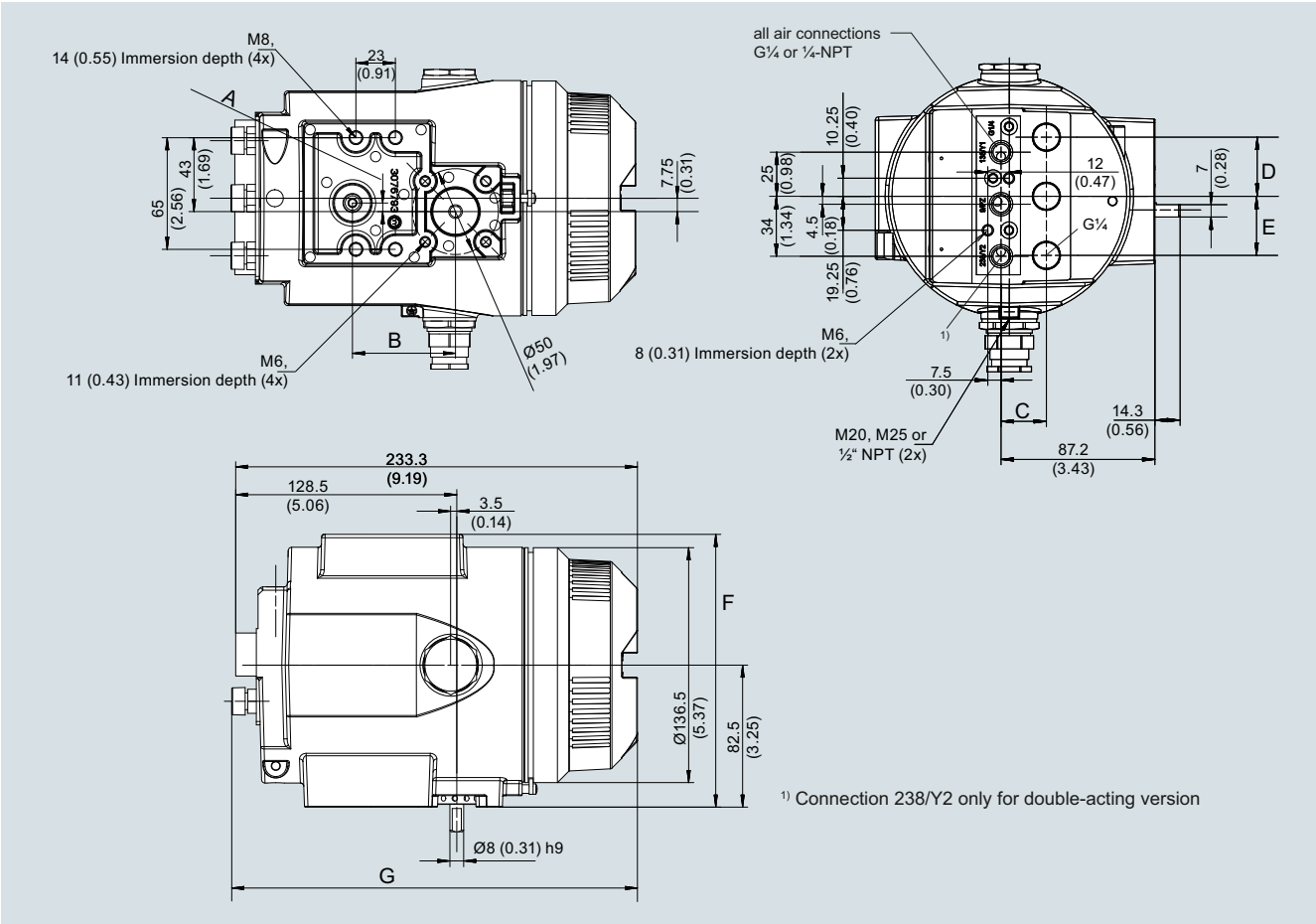

SIPART PS2, flameproof enclosure, dimensions in mm (inch)

Value	6DR5..5	6DR5..6
A	5 (0.2)	-
B	60 (2.36)	-
C	25.7 (1.01)	21.7 (0.85)
D	33.5 (1.32)	25 (0.99)
E	33.5 (1.32)	-
F	158.5 (6.24)	160 (6.3)
G	235.3 (9.26)	227.6 (8.96)

6DR5..5 Aluminum enclosure, flameproof;
dimensions with pneumatic connection G¼ or ¼-18 NPT

6DR5..6 Stainless steel enclosure, flameproof

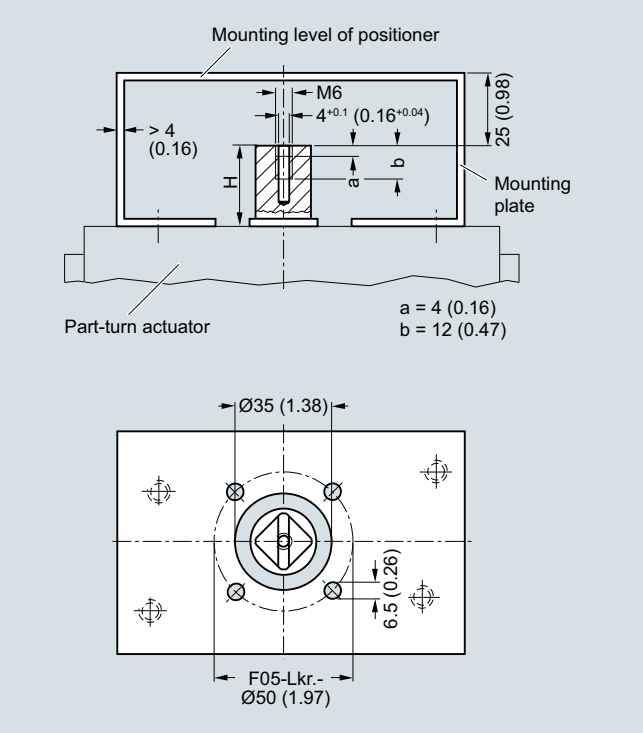

Mounting onto part-turn actuators; mounting console can be ordered via 6DR4004-1D/-2D/-3D/-4D, extract from VDI/VDE 3845, dimensions in mm (inch)

© Siemens 2020

Mounting kit for NAMUR linear actuators 6DR4004-8V

- 1 mounting bracket
- 2 clamps
- 1 U-bracket
- 1 lever arm with adjustable tapered roller
- 2 U-bolts
- Various screws and lock washers

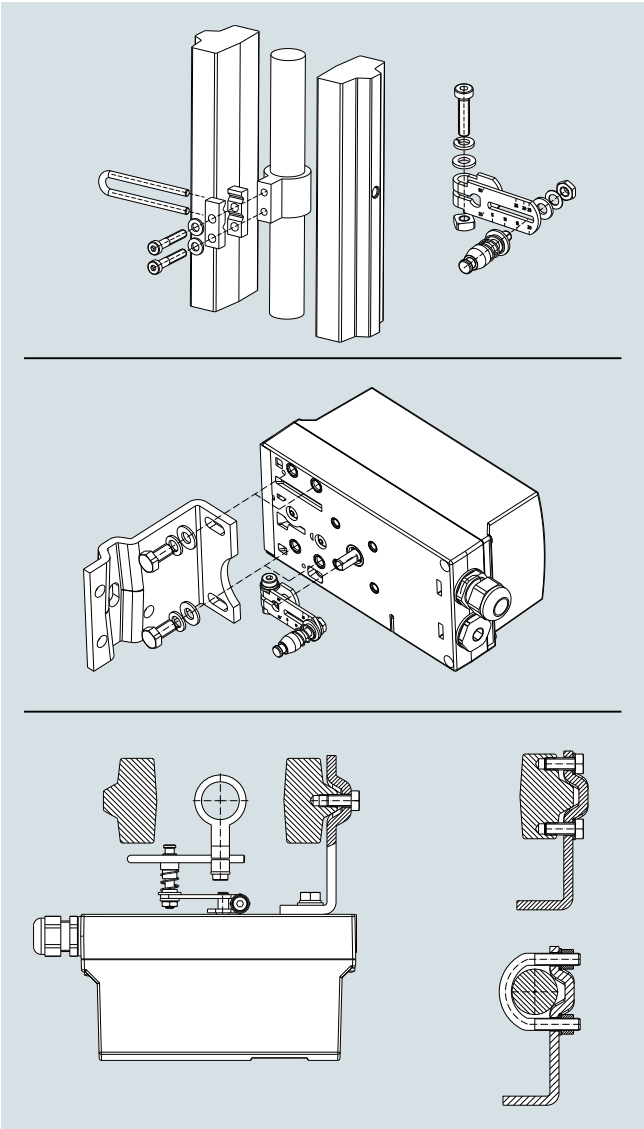

Mounting of SIPART PS2 on linear actuators

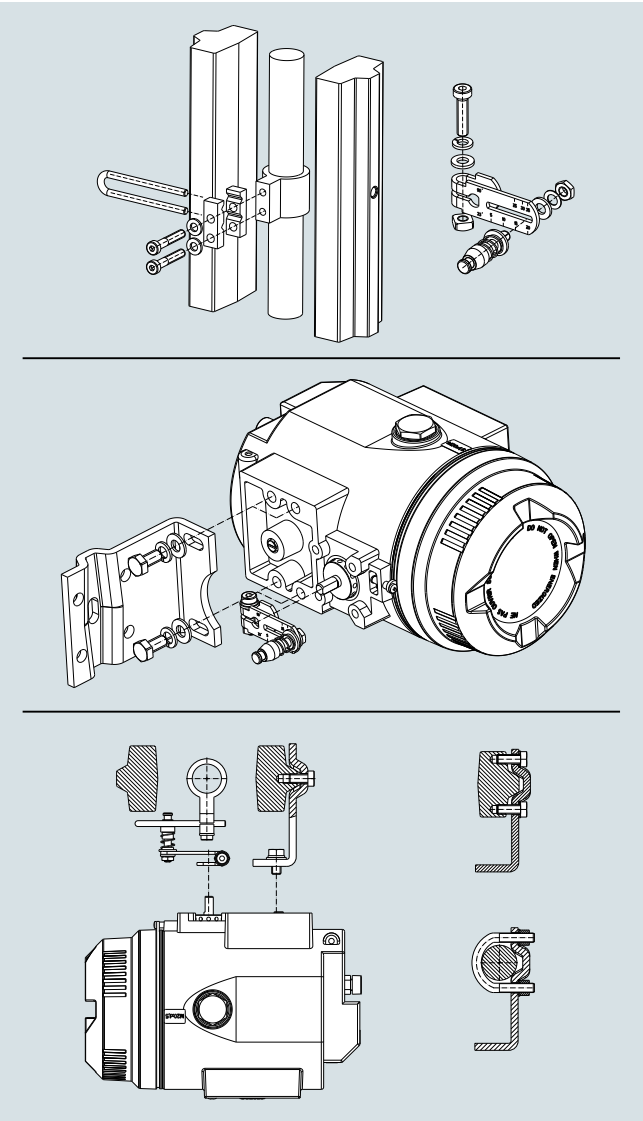

Mounting of SIPART PS2 in flameproof aluminum enclosure on linear actuators

Mounting console made of stainless steel 316L for linear actuators 6DR4004-8R

- Console with 2 adjustable mounting brackets
- 4 U-brackets for pillar mounting
- 1 lever arm with adjustable tapered roller
- 2 clamps with U-bracket
- Screws and lock washers

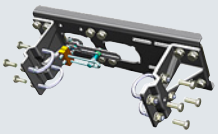

Mounting console made of stainless steel 316L 6DR4004-8R

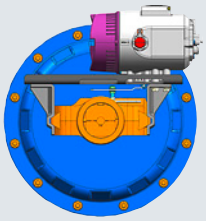

Mounting console stainless steel 316L mounted on SIPART PS2 in flameproof stainless steel enclosure 316L

© Siemens 2020

Mounting kits

Mounting kit for NAMUR part-turn actuators 6DR4004-8V

- 1 coupling wheel
- 1 driver pin
- 8 scales
- 1 pointer
- Various screws and lock washers

Important

The mounting console for mounting on the part-turn actuators is not included in the scope of delivery, but can be ordered separately via 6DR4004-1D/-2D/-3D/-4D. Fastening screws are not included in the scope of delivery (see "Technical data")

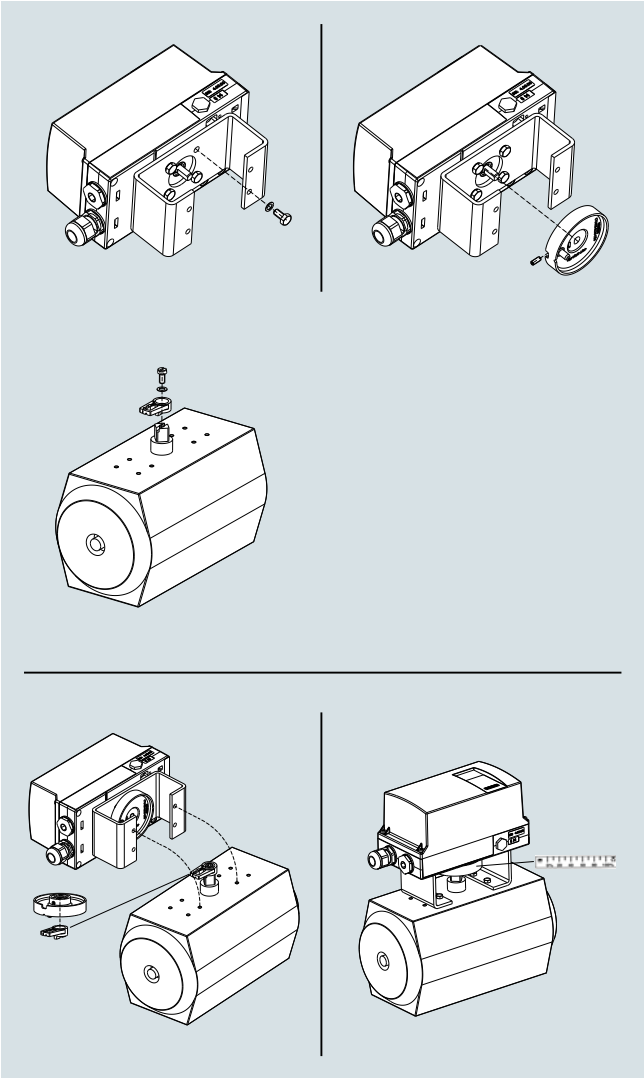

Mounting of SIPART PS2 on part-turn actuators

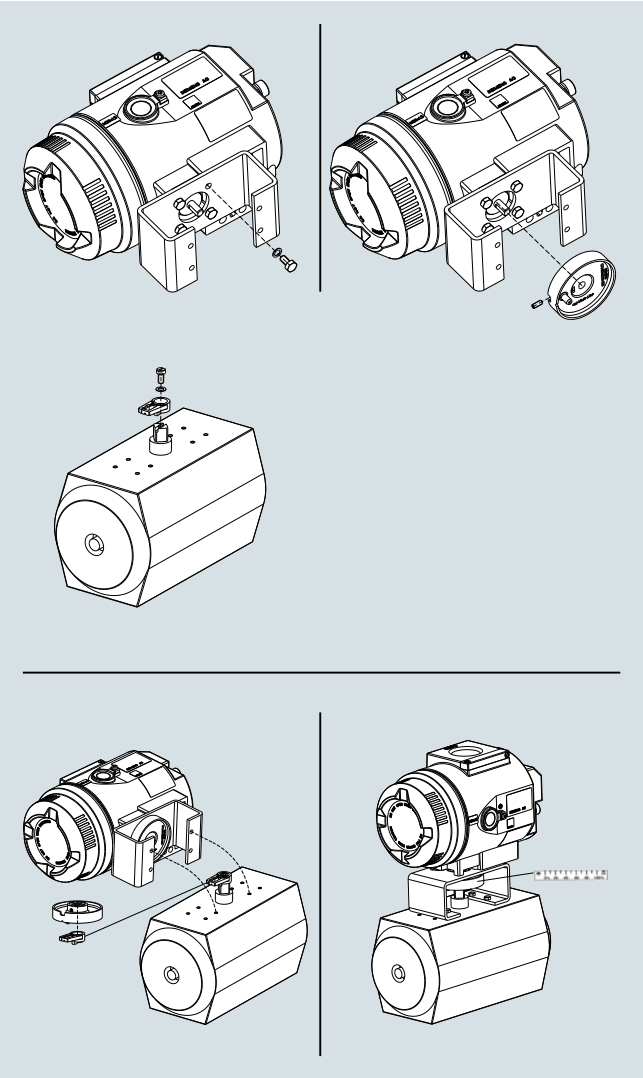

Mounting of SIPART PS2 in flameproof aluminum enclosure on part-turn actuators

© Siemens 2020

Booster mounted on positioner

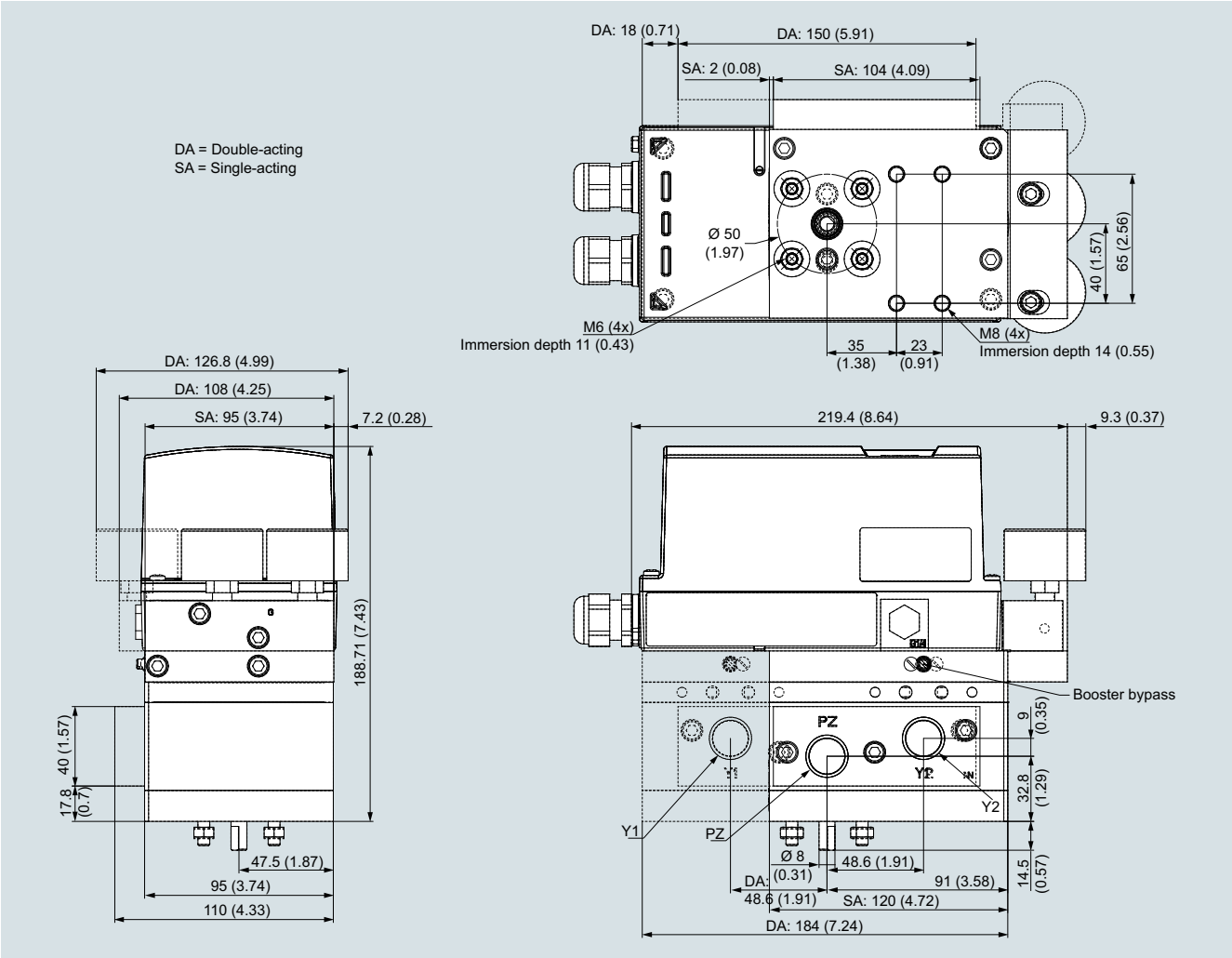

Booster mounted on positioner, dimensions in mm (inch)

© Siemens 2020

Dimensional drawings

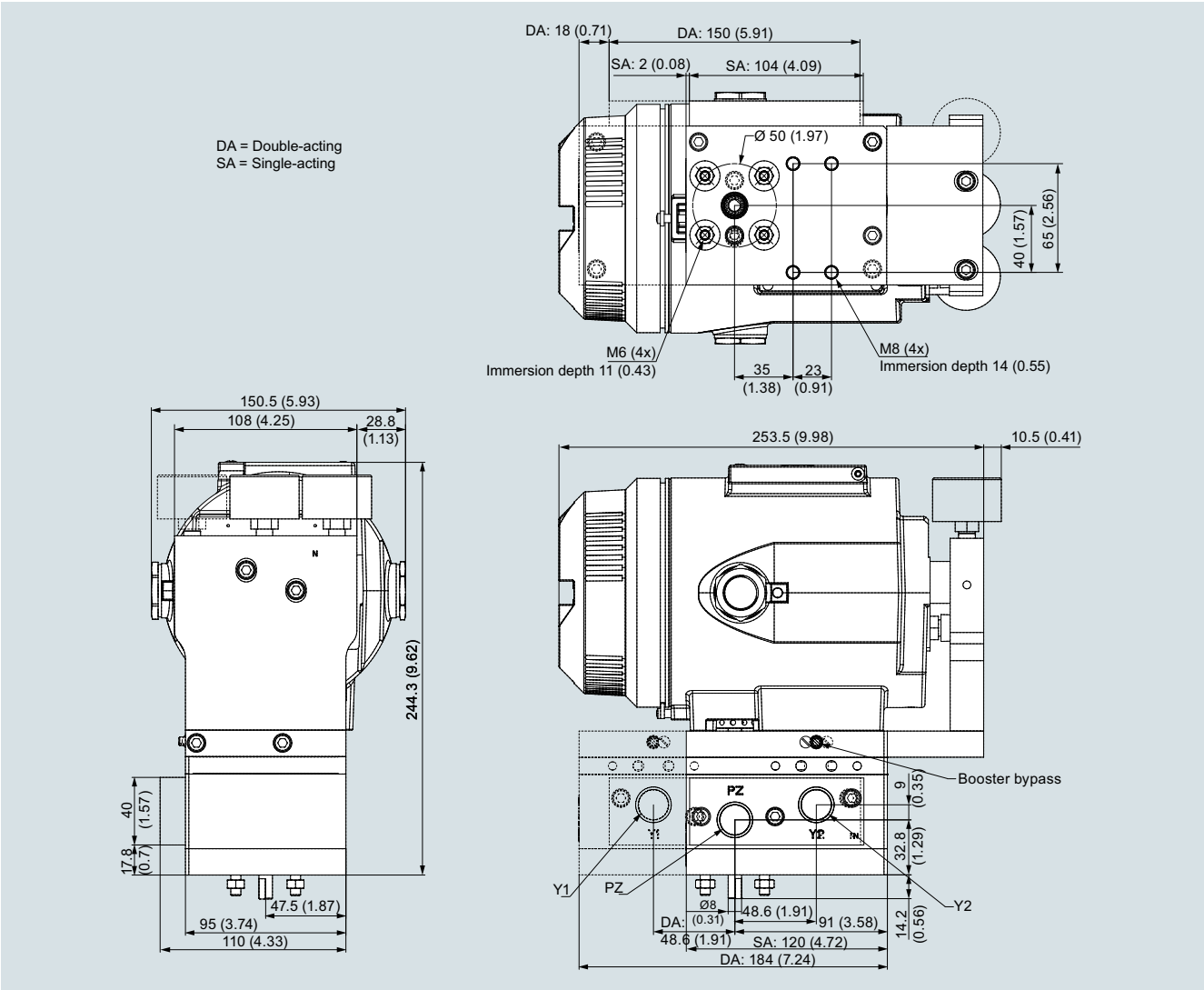

Booster mounted on positioner in a flameproof enclosure, dimensions in mm (inch)

More information

Special designs

On request

Documentation

The entire documentation is available for download free of charge in various languages at:
http://www.siemens.com/processinstrumentation/documentation

© Siemens 2020

Overview

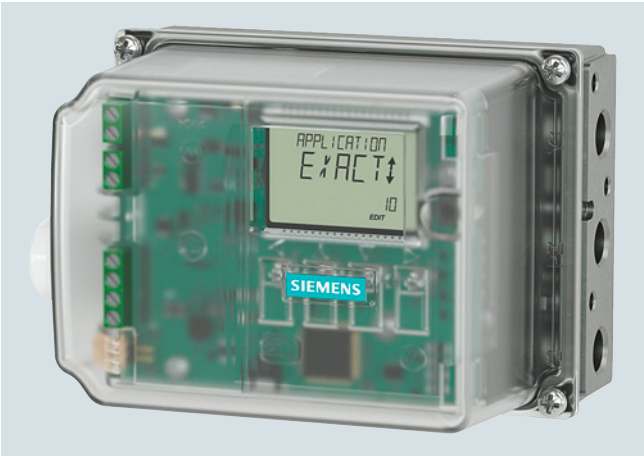

SIPART PS100 positioner with polycarbonate lid and inspection window

SIPART PS100 electropneumatic positioner in aluminum enclosure without inspection window

The SIPART PS100 electropneumatic positioner is used to control the process valve or damper position of pneumatic linear or part-turn actuators. The SIPART PS100 electropneumatic positioners control the process valve according to the setpoint value.

Benefits

The SIPART PS100 positioners offer the following advantages:

- Fast commissioning at the push of a button
- Simple operation via the display and four buttons
- Display symbols according to NAMUR NE 107
- Negligible air consumption in stationary operation
- Setting the application profile based on predefined selection options, e.g. tight-closing valve, open/close valve, small valve
- Fast response in end positions ensures short positioning times and tight valves
- Insensitive to vibrations and steam hammer
- Leakage compensation ensures a constant actual value and protects the actuator
- Only one device version for linear and part-turn actuators
- Consistent parameter assignment with HART communication
- Safe use in hazardous areas

Application

The SIPART PS100 positioner is used, for example, in the following industries:

- Valve manufacturing
- Chemical industry
- Power stations
- Paper and glass
- Water and wastewater
- Food and pharmaceuticals

The SIPART PS100 positioner can be used with pneumatic actuators and an analog input (AI), 4 to 20 mA.

© Siemens 2020

Design

The SIPART PS100 positioner comprises the following components:

- Enclosure (base plate with lid)
- Electronics
- Wear-free, contact-free position detection
- Pneumatic block

The pneumatic block is located in the enclosure, the pneumatic connections for the inlet air and the actuating pressure on the right-hand side of the enclosure. The electrical connections are located on the left-hand side of the enclosure.
The SIPART PS100 positioner is fitted to the relevant pneumatic linear or part-turn actuator using an appropriate mounting kit. The positioner shaft is located on the underside of the base plate. The positioner shaft is connected to the spindle of the linear actuator or the actuator shaft of the part-turn actuator using the mounting kit.

The electronics are available with the following options:

- Analog output (AO) 4 to 20 mA
  The current position of the valve is converted into a 4 to 20 mA signal.
- Digital input and digital output (DI and DQ)
  - Position limit monitoring.
  - Output of an alarm in the event of a control deviation or a device fault.
  - Approach of a defined process valve position, disabling of keys, blocking of valve process valve by means of digital input.
- HART communication on parameter assignment and information on the device status

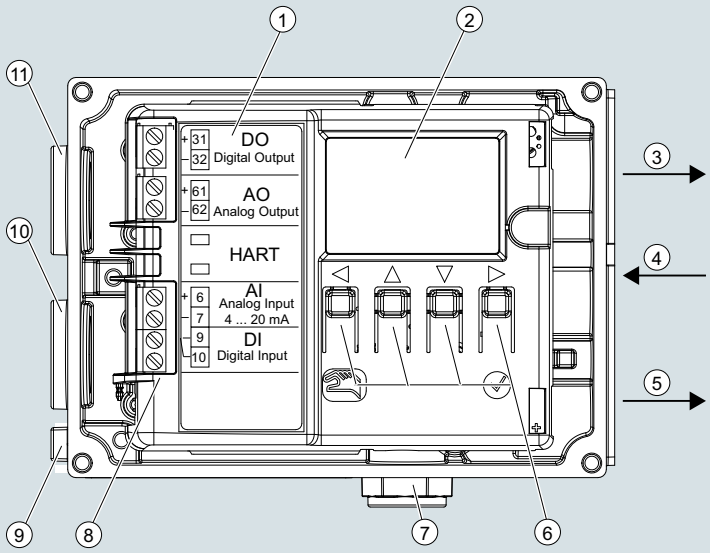

1. Wiring diagram on module cover
2. Display
3. Output: actuating pressure Y1
4. Input: supply air pressure PZ
5. Output: actuating pressure Y2 for double-acting actuators
6. Buttons
7. Exhaust air outlet with a sound absorber
8. Connecting terminals
9. Grounding, thread M4
10. Lower cable gland, thread M20x1.5
11. Upper cable gland, thread M20x1.5

SIPART PS100, enclosure with open lid

Function

Local operation is performed using the built-in display and the four buttons. It enables, for example:

- Starting automatic commissioning with the press of a button
- Configuring the device
- Switching between the operating modes:
  - AUTO: The positioner controls the valve according to the analog input (AI) 4 to 20 mA
  - MANUAL: Valve movement with the middle keys

A hallmark of the SIPART PS100 is its own extremely low consumption of air. Compressed air is only required to move the valve. In the controlled state, consumption of air is negligible.

© Siemens 2020

Technical specifications

Input	
Analog input AI, terminals 6 and 7	
• Rated signal range	4 ... 20 mA
• Minimum current to maintain operation	3.8 mA
• Maximum load voltage	6.5 V (corresponds to 325 Ω at 20 mA)
• Static destruction limit	± 40 mA
• Type of communication	HART 7
Digital input (DI), terminals 9 and 10	
• Electrical isolation	Electrically connected to analog input Electrically isolated from the outputs
• Signal state 0, floating contact open	> 300 kΩ
• Signal state 1, floating contact closed	< 3 kΩ
• Contact load	Suitable only for floating contact; max. contact load < 20 µA, 3 V
Output	
Analog output (AO), terminals 61 and 62	
• Type of connection	2-wire connection
• Rated signal range	4 ... 20 mA
• Fault current	< 3.6 mA
• Supply voltage U_H	12 ... 30 V
• External load R_B [kΩ]	≤ (U_H [V] - 12 V)/I_O [mA]
• Resolution in relation to the nominal signal range	0.05%
• Transmission error in relation to the nominal signal range	± 0.3%
• Effect of ambient temperature	± 0.1%/10K
• Maximum residual ripple	± 0.5%
• Electrical isolation	Electrically isolated from the other electrical inputs and outputs
Digital output (DQ), terminals 31 and 32	
• Maximum supply voltage U_H	35 V
• External current consumption	To be limited to 50 mA
• "Conductive" state	• Permissible rated current 50 mA • Maximum terminal voltage 3 V • Overload-proof
• "Locked" state "Locked" is also the state if the device is faulty or analog input (AI) is = 0 mA.	I < 60 µA
Operating conditions	
Ambient conditions for operation according to IEC 60068-2	For indoor and outdoor use
Ambient temperature	
• Ambient temperature	-20 ... +80 °C (-4 ... +176 °F)
• Relative humidity	0 ... 100%
Pollution degree according to IEC 61010-1	2
Overvoltage category according to IEC 61010-1	II
Degree of protection of enclosure	
• According to IEC 60529	IP66
• 6DR711* according to UL 50 E	Type 4X
Corrosion protection according to EN ISO 9227:2012 and EN ISO 12944:1999	
• 6DR710 polycarbonate enclosure	C5-M medium durability
• 6DR711 aluminum enclosure	C5-M medium durability

Vibration resistance	
• Harmonic oscillations (sine) according to IEC 60068-2-6	3.5 mm (0.14"), 2 ... 27 Hz, 3 cycles/axis 98.1 m/s² (321.84 ft/s²), 27 ... 300 Hz, 3 cycles/axis
• Bumping (half-sine) according to IEC 60068-2-27	150 m/s² (492 ft/s²), 6 ms, 1 000 shocks/axis
• Noise (digitally controlled) according to IEC 60068-2-64	10 ... 200 Hz; 1 (m/s²)²/Hz (3.28 (ft/s²)²/Hz) 200 ... 500 Hz; 0.3 (m/s²)²/Hz (0.98 (ft/s²)²/Hz), 4 hours/axis
Pneumatic data	
Pneumatic operating medium	Compressed air, carbon dioxide (CO_2), nitrogen (N_2), noble gases
• Operating pressure	1.4 ... 7 bar (20.3 ... 101.5 psi)
Air quality according to ISO 8573-1	
• Solid particulate size and density	Class 3
• Pressure dew point	Class 3 (min. 20 K (36 °F) below ambient temperature)
• Oil content	Class 3
Flow	
• Pressurize process drive	
- Inlet air pressure 4 bar (58 psi)	7.1 Nm³/h (31.3 USgpm)
- Inlet air pressure 6 bar (87 psi)	9.8 Nm³/h (43.1 USgpm)
• Depressurize process drive	
- Actuating pressure 4 bar (58 psi)	13.7 Nm³/h (60.3 USgpm)
- Actuating pressure 6 bar (87 psi)	19.2 Nm³/h (84.5 USgpm)
Leakage actuator chamber (positioner portion)	< 6 · 10^{-4} Nm³/h (0.0026 USgpm)
Consumption at operating medium in the controlled state	< 3.6 · 10^{-2} Nm³/h (0.158 USgpm)
Sound pressure	L_{Aeq} < 75 dB L_{Amax} < 80 dB
Design	
Supported actuator types	
• Linear actuator, range of stroke	10 ... 130 mm (0.39 ... 5.12")
• Part-turn actuator, angle-of-rotation range	10 ... 100°
Weight, positioner without accessories	Approx. 1.0 kg (2.20 lb)
Material	
• Lid	• Aluminum • Polycarbonate
• Base plate	Aluminum
• Gauge block	Aluminum, anodized or stainless steel 316
• Pressure gauge	• Plastic, mechanics brass • Stainless steel, mechanics brass nickel-plated • Stainless steel, mechanics stainless steel 316
Torques	
• Lid fixing screws	1.5 Nm (1.1 ft lb)
• Part-turn actuator fixing screws DIN 933 M6x12-A2	5 Nm (3.7 ft lb)
• Linear actuator fixing screws DIN 933 M8x16-A2	12 Nm (8.9 ft lb)
• Gland pneumatic G¼	15 Nm (11.1 ft lb)
• Gland pneumatic ¼-18 NPT	
- Without sealant	12 Nm (8.9 ft lb)
- With sealant	6 Nm (4.4 ft lb)
• M20 cable gland, plastic	4 Nm (3 ft lb)
• M20 cable gland, metal	6 Nm (4.4 ft lb)
• ½-14 NPT cable gland, metal	15 Nm (11.1 ft lb)

© Siemens 2020

Technical specifications

• ½-14 NPT cable gland, metal in the NPT adapter **IMPORTANT:** To avoid damage to the device, the NPT adapter must be held in place while the NPT gland is screwed into the NPT adapter.	68 Nm (50 ft lb)
• Union nut made of plastic	2.5 Nm (1.8 ft lb)
• Union nut made of metal	4 Nm (3 ft lb)
• Pressure gauge block fixing screws	6 Nm (4.4 ft lb)
Pressure gauge	
• Degree of protection	
- Pressure gauge plastic, mechanics brass	IP31
- Pressure gauge metal, mechanics brass nickel-plated	IP44
- Pressure gauge stainless steel, mechanics stainless steel 316L	IP54
Connections, electrical	
• Screw terminals	2.5 mm^2 AWG30-14
• Cable bushing	M20x1.5 or ½-14 NPT with NPT adapter
Connections, pneumatic	G¼ or ¼-18 NPT
Controller	
Controller unit	
• Five-point switch	Adaptive
• Deadband	
- Adjustable peak value	± 0.1 to 3%, plus hysteresis (half of the deadband, but at least 0.2%)
- Minimization of the peak value	Always active
Analog input (AI), terminals 6 and 7	
• Sampling interval	50 ms
• Resolution	0.05%
Position detection	
• Sampling interval	10 ms
• Resolution at 10 mm stroke	0.1%
• Temperature influence effect	0.1%/10 K (0.1%/18 °F)
Explosion protection	You can find details on explosion protection in the operating instructions and the explosion protection certificates: https://support.industry.siemens.com/cs/ww/en/ps/25458/man https://support.industry.siemens.com/cs/ww/en/ps/25458/cert

© Siemens 2020

Selection and ordering data

	Article No.
SIPART PS100 electropneumatic positioner without explosion protection ↗	**6DR71 ■■ - 0 ■■■■ - ■■■ 0**
↗ Click on the Article No. for the online configuration in the PIA Life Cycle Portal.	
Enclosure material	
Polycarbonate, lid with inspection window	**0**
Aluminum, lid without inspection window	**1**
Actuator type	
For single-acting actuators	**1**
For double-acting actuators	**2**
Communication	
2-wire, 4 ... 20 mA	**N**
2-wire, 4 ... 20 mA, HART	**AN**
Device option 1	
Without device option 1	**N**
With digital input (DI) and digital output (DQ)	**A**
Device option 2	
Without device option 2	**0**
With analog output (AQ) 4 ... 20 mA	**1**
Thread of the lower cable entry/ cable gland	
M20 x 1.5/without cable gland	**0**
M20 x 1.5/with plastic cable gland	**1**
M20 x 1.5/with metal cable gland	**2**
½-14 NPT/without cable gland	**4**
Thread of the upper cable entry/ cable gland	
M20 x 1.5/with blanking plug	**0**
M20 x 1.5/with plastic cable gland	**1**
M20 x 1.5/with metal cable gland	**2**
½-14 NPT/without cable gland	**4**
Pneumatic thread	
G¼	**A**
¼-18 NPT	**B**
Pneumatic accessories	
Without gauge block	**A**
Gauge made of plastic, block made of aluminum	**C**
Gauge made of metal, block made of aluminum	**D**
Gauge made of stainless steel, block made of stainless steel	**E**

	Article No.
SIPART PS100 electropneumatic positioner with explosion protection ↗	**6DR71 ■■ - ■■N■■ - ■■■ 0**
↗ Click on the Article No. for the online configuration in the PIA Life Cycle Portal.	
Enclosure material	
Polycarbonate, lid with inspection window	**0**
Aluminum, lid without inspection window	**1**
Actuator type	
For single-acting actuators	**1**
For double-acting actuators	**2**
Degree of protection	
Ex i (ATEX, IECEx,...)[1]	**1**
Ex i; Ex e (ATEX, IECEx,...)[1]	**2**
Ex i; Ex e; Ex t (ATEX, IECEx,...)[1]	**3**
Communication	
2-wire, 4 ... 20 mA	**N**
2-wire, 4 ... 20 mA, HART	**A**
Device option 2	
Without device option 2	**0**
With analog output (AQ) 4 ... 20 mA	**1**
Thread of the lower cable entry/ cable gland	
M20 x 1.5/without cable gland	**0**
M20 x 1.5/with plastic cable gland	**1**
M20 x 1.5/with metal cable gland	**2**
½-14 NPT/without cable gland	**4**
Thread of the upper cable entry/ cable gland	
M20 x 1.5/with blanking plug	**0**
M20 x 1.5/with plastic cable gland	**1**
M20 x 1.5/with metal cable gland	**2**
½-14 NPT/without cable gland	**4**
Pneumatic thread	
G¼	**A**
¼-18 NPT	**B**
Pneumatic accessories	
Without gauge block	**A**
Gauge made of plastic, block made of aluminum	**C**
Gauge made of metal, block made of aluminum	**D**
Gauge made of stainless steel, block made of stainless steel	**E**

[1] You will find all currently available certificates on http://www.siemens.com/processinstrumentation/certificates.

© Siemens 2020

Selection and ordering data

Options	Order code
Append suffix "**-Z**" to Article No., add order code and plain text.	
TAG plate made of stainless steel, 3-line Input fields Text line 1: Plain text from Y15 Text line 2: Plain text from Y16 Text line 3: Plain text from Y17	**A20**
Version with stainless steel sound absorbers	**A40**
Measuring point description Input field: Max. 16 characters; specify in plain text	**Y15**
Measuring point text Input field: Max. 24 characters; specify in plain text	**Y16**
Measuring point number (TAG no.) Input field: Max. 32 characters; specify in plain text	**Y17**

Accessories	Article No.
Gauge block	
With gauges made of plastic IP31 (MPa, bar)	
• Block made of aluminum, single-acting, G¼	**6DR4004-1M**
• Block made of aluminum, double-acting, G¼	**6DR4004-2M**
With gauges made of plastic IP31 (MPa, psi)	
• Block made of aluminum, single-acting, ¼-18 NPT	**6DR4004-1MN**
• Block made of aluminum, double-acting, ¼-18 NPT	**6DR4004-2MN**
With gauges made of metal IP44 (MPa, bar, psi)	
• Block made of aluminum, single-acting, G¼	**6DR4004-1P**
• Block made of aluminum, double-acting, G¼	**6DR4004-2P**
• Block made of aluminum, single-acting, ¼-18 NPT	**6DR4004-1PN**
• Block made of aluminum, double-acting, ¼-18 NPT	**6DR4004-2PN**
With gauges made of stainless steel 316 IP54 (MPa, bar, psi)	
• Block made of stainless steel 316, single-acting, G¼	**6DR4004-1Q**
• Block made of stainless steel 316, double-acting, G¼	**6DR4004-2Q**
• Block made of stainless steel 316, single-acting, ¼-18 NPT	**6DR4004-1QN**
• Block made of stainless steel 316, double-acting, ¼-18 NPT	**6DR4004-2QN**
Venting gauge block Depressurizing of Y2 on compressed air failure with gauges made of metal IP44 (MPa, bar, psi). The DA actuator with springs moves into the safety position.	
• Block made of aluminum, double-acting, G¼	**6DR4004-2RE**
• Block made of aluminum, double-acting, ¼-18 NPT	**6DR4004-2RF**
Booster (Cv = 2) Aluminum with gauges made of metal IP44 (MPa, bar, psi)	
• Single-acting, G½	**6DR4004-1RJ**
• Double-acting, G½	**6DR4004-2RJ**
• Single-acting, ½-14 NPT	**6DR4004-1RK**
• Double-acting, ½-14 NPT	**6DR4004-2RK**
Mounting kit for NAMUR part-turn actuators	
VDI/VDE 3845, with plastic coupling wheel, without mounting console	**6DR4004-8D**
VDI/VDE 3845, with stainless steel coupling, without mounting console	**TGX:16300-1556**
Console for mounting on Namur part-turn actuators VDI/VDE 3845	
• 80 x 30 x 20 mm (3.15 x 1.18 x 0.79 inch)	**6DR4004-1D**
• 80 x 30 x 30 mm (3.15 x 1.18 x 1.18 inch)	**6DR4004-2D**
• 130 x 30 x 30 mm (5.12 x 1.18 x 1.18 inch)	**6DR4004-3D**
• 130 x 30 x 50 mm (5.12 x 1.18 x 1.97 inch)	**6DR4004-4D**
Mounting kit for other part-turn actuators The following mounting consoles can be used together with the NAMUR part-turn actuator mounting kit 6DR4004-8D.	
SPX (DEZURIK) Power Rack, sizes R1, R1A, R2, R2A	**TGX:16152-328**
Masoneilan Camflex II	**TGX:16152-350**
Fisher 1051/1052/1061, sizes 30, 40, 60 to 70	**TGX:16152-364**
Fisher 1051/1052, size 33	**TGX:16152-348**

Accessories	Article No.
Mounting kit for NAMUR linear actuators	
NAMUR linear actuator mounting kit with short lever arm (2 ... 35 mm (0.08 ... 1.38 inch))	**6DR4004-8V**
Lever arm for strokes of 35 ... 130 mm (1.38 ... 5.12 inch) without NAMUR mounting bracket	**6DR4004-8L**
Reduced mounting kit (as for 6DR4004-8V but without fixing angle and U-bracket), with short lever with up to 35 mm (1.38 inch) stroke	**6DR4004-8VK**
Reduced mounting kit (as for 6DR4004-8V but without fixing angle and U-bracket), with long lever > 35 mm (1.38 inch) stroke	**6DR4004-8VL**
Roll and disk made of stainless steel 316 for replacement of the Teflon roll and aluminum disk in the 6DR4004-8, -8VK and -8VL mounting kits for NAMUR linear actuators	**6DR4004-3N**
Two terminal blocks made of stainless steel 316 for replacement of the aluminum terminal blocks in the 6DR4004-8V, -8VK and -8VL mounting kits for NAMUR linear actuators	**6DR4004-3M**
Mounting kit for other linear actuators	
MASONEILAN type 87/88	**TGX:16152-1210**
MASONEILAN type 37/38, all sizes	**TGX:16152-1215**
Fisher type 657/667, sizes 30 ... 80	**TGX:16152-900**
OPOS interface according to VDI/VDE 3847	
OPOS adapter with interface VDI/VDE 3847, blanketing, not for flameproof enclosures	**6DR4004-5PB**
SITRANS I100 isolating power supply HART (see "SITRANS I supply units and isolation amplifiers")	
With 24 V DC auxiliary power	**7NG4124-1AA00**
SITRANS I200 output isolator HART (see "SITRANS I supply units and isolation amplifiers")	
With 24 V DC auxiliary power	**7NG4131-0AA00**

[1] Only together with 6DR4004-8S.

Scope of delivery for positioner

1 SIPART PS100 positioner as ordered

© Siemens 2020

Dimensional drawings

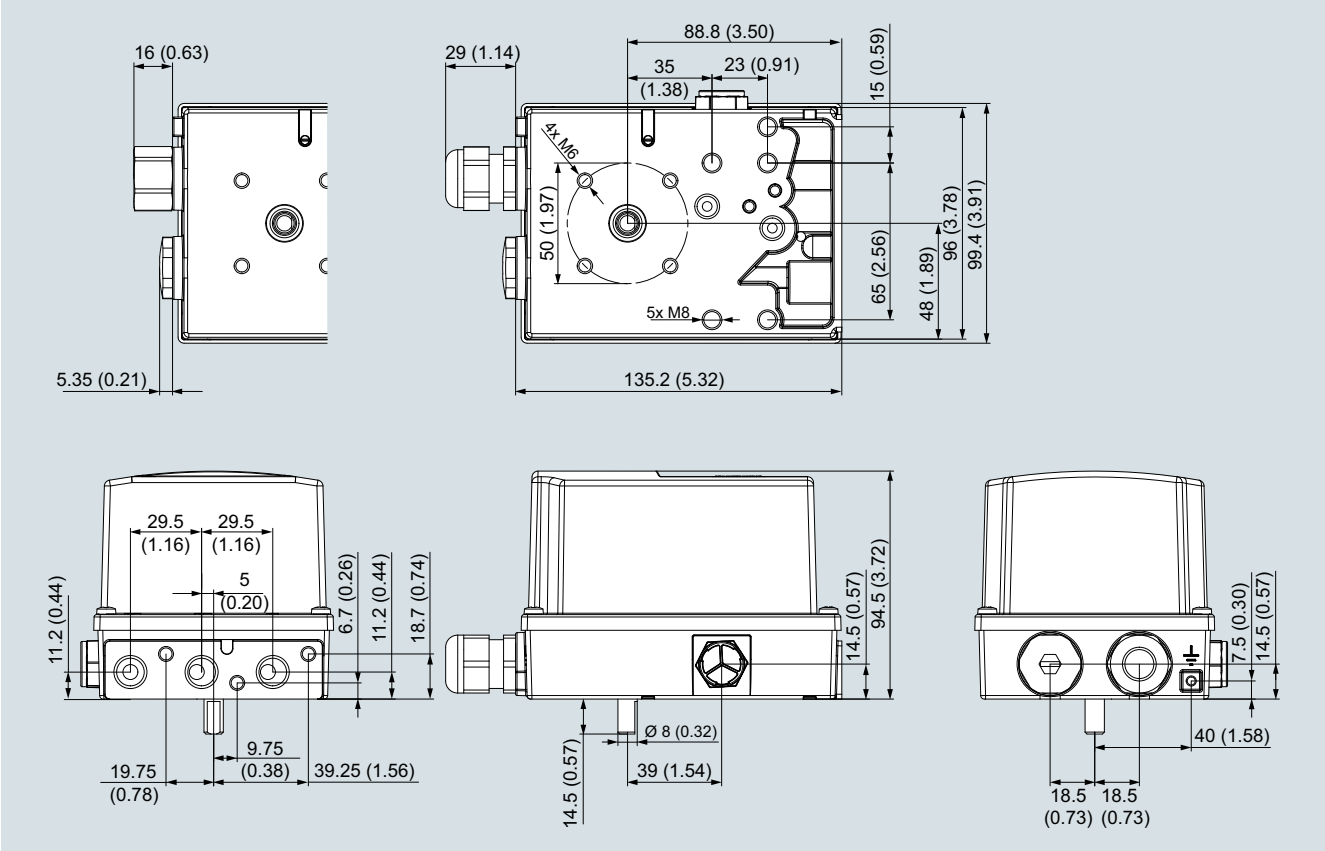

Non-flameproof enclosure, dimensions in mm (inch)

More information

Documentation

The entire documentation is available for download free of charge in various languages at:
http://www.siemens.com/processinstrumentation/documentation

© Siemens 2020

Notes

© Siemens 2020

6/2 Product overview

6/3 Acoustic and Motion sensing
6/3 Introduction

6/5 Acoustic sensors
6/5 SITRANS DA400 Acoustic diagnostic unit
6/11 SITRANS AS100 Acoustic sensor
6/15 SITRANS CU02 Control Unit

6/18 Motion sensors
6/18 Milltronics MFA 4p Motion failure alarm controller
6/25 Milltronics MSP-7 Motion sensor
6/27 SITRANS WM300 Motion failure alarm controller
6/31 SITRANS WM100 Motion sensor

You can download all instructions, catalogs and certificates for Process Protection free of charge at: www.siemens.com/processprotection

© Siemens 2020

Overview

	Application	Device description	Page
Acoustic sensor for pump monitoring			
	Acoustic diagnostics unit for flow valve leakage monitoring in oscillating displacement pumps or for material flow monitoring of bulk solids in pipes, conveyors or raceways.	**SITRANS DA400** • 4 inputs for structure-born noise sensors • 4 universal inputs • 6 digital outputs • With PROFIBUS DP or PROFIBUS PA • Sensor degree of protection IP66/IP68	6/5
Acoustic sensors for material flow monitoring			
	Acoustic sensor for solids flow detection.	**SITRANS AS100** • Non-invasive • Screw in, bolt on, weld, or bond in place • Analog output • High and low sensitivity range of operation	6/11
	Alarm control unit for use with SITRANS AS100 acoustic sensor to provide reliable continuous protection for bulk solid flow. It processes signals from the sensor, providing relay and analog outputs for interface into a process.	**SITRANS CU02** • 3 digit LCD display • 4 ... 20 mA output • Two programmable relays • Adjustable independent time delay for each relay • DIN rail mounting provides easy installation	6/15
Motions sensors			
	Highly sensitive single set point motion sensor alarm unit, used with MSP probes.	**Milltronics MFA 4p** • Probe/target separation up to 100 mm (4 inch) • Minimum velocity of moving ferrous target: 1 cm/sec. (2 fpm)	6/18
	Heavy duty 3-wire motion sensor that provides an NPN open collector output to PLCs.	**Milltronics MSP-7** • Up to 100 mm (4 inch) gap between target and probe • Corrosion resistant construction	6/25
	Highly sensitive dual setpoint motion sensor system, used with Milltronics MSP probes.	**SITRANS WM300 MFA** • Up to 100 mm (4 inch) gap between target and probe. • Setpoint adjustment range 2 to 5 000 Hz (120 to 300 000 ppm	6/27
	Heavy-duty zero speed alarm switch.	**SITRANS WM100** • Detects the absence or presence of motion of rotating or reciprocating or conveying equipment	6/31

© Siemens 2020

Overview

Process protection devices act as early warning systems to avoid costly process interruptions and breakdowns of equipment. Non-contacting motion sensors detect changes in motion and speed of conveying, reciprocating and rotating machinery.

Non-invasive acoustic sensors detect inaudible, high frequency acoustic emissions generated by friction and impact, caused by materials in motion. They can detect conditions of flow/no flow or high/low flow, to warn of blockages, product absence or equipment failure. They are located outside of the process, accurately detecting conditions without wear on the sensor.

Motion sensors can warn in case of equipment malfunction and shut down machinery in case of a slowdown or failure. They are rugged and perform even in harsh industrial conditions. Most of the MFA 4p motion sensing probes, as well as the SITRANS WM100, can be mounted up to 100 mm (4 inch) from the ferrous target, reducing the chance of damage to the probe and the equipment. The probes are not affected by moisture or dust build-up.

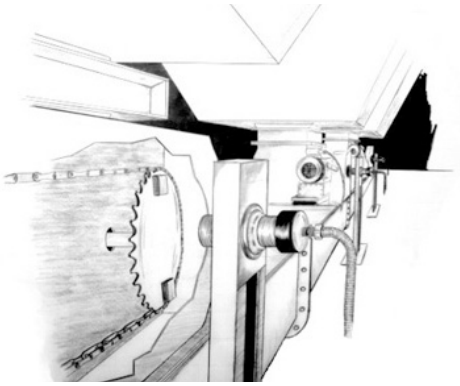

Motion sensing on drive shaft of rotary feeder

Mode of operation

Acoustic Sensing

Acoustic sensors monitor high frequency emissions generated by friction and the impact of flowing material or mechanical parts. The sensors can also sense the turbulence of gases or liquids leaking through valves and flanges. When matter vibrates between 0 Hz and 200 kHz, it creates acoustic energy. Sound energy between 20 Hz and 20 kHz can be detected by humans. Acoustic sensors detect high-frequency acoustic energy between 75 kHz and 175 kHz. Acoustic energy travels quickly through dense materials (metal) and poorly through less dense materials (air). Because the acoustic sensors are mounted directly to the external wall of the chute work, other plant noises are well below 75 kHz and effectively ignored by the sensors.

The acoustic sensors contain a specialized piezocrystal and filter circuit that responds effectively to the high-frequency band between 75 kHz and 175 kHz. As the crystal is excited by the acoustic energy, it produces a continuous electrical signal in direct proportion to the level of acoustic energy received. The SITRANS AS100 sensor output of 0 to 10 V DC can be applied to a PLC or to an optional control unit for a programmable alarm relay or 4 to 20 mA signal output.

Motion sensing

Siemens Milltronics probes work on the principle of Faraday's Laws of Electromagnetic Induction. When a ferromagnetic object enters the probe's permanent magnetic field, it distorts the flux, causing its coil windings to generate a voltage. This voltage is proportional to the strength of the magnet and the number of wire turns in the coil (constant in the probes) and the speed at which the ferrous target passes through the flux. The generated voltage is also inversely proportional to the square of the distance between the target and the probe.

The robust motion sensors provide the contacts to shut down machinery whenever under-speed, over-speed or plant equipment failure occurs. On belt, drag and screw conveyors, or on bucket elevators, fans and pumps, the speed alarm option can warn instantly of equipment malfunction. Some probes may be linked to a programmable logic controller to monitor equipment.

© Siemens 2020

Technical specifications

Process Protection Selection Guide

Criteria	SITRANS DA400	SITRANS AS100	Milltronics MFA 4p	SITRANS WM300 MFA	Milltronics MSP-7	SITRANS WM100
Typical industries	Mining, water/wastewater, chemicals/petrochemicals and oil & gas industry	Aggregates, grain, cement, food processing, power generation, steel processing	Aggregates, cement, mining, wastewater, grain	Mining aggregate, cement, and other primary and secondary industries.	General industrial applications	Aggregates, cement, mining
Typical Applications	Oscillating displacement pumps such as diaphragm piston pumps, piston pumps and hose-type diaphragm piston pumps. Monitoring of flowing materials in pipes, conveyors or channels.	Pipes, pneumatic conveyors, aerated gravity flow systems, burst filter bag detection	Tail pulleys, driven pulleys, motor shaft sensing, screw conveyor flights, bucket elevators	Tail pulleys, motor shaft sensing, screw conveyor flights, bucket elevators	Tail pulley shafts, driven pulleys, motor shaft sensing, belt or drag conveyors, screw conveyor flights, bucket elevators, fans and pumps	Tail pulleys, driven pulleys, motor shaft sensing, screw conveyor flights, bucket elevators
Operation	Acoustic detection of cavitation, optionally acoustic detection of impact noises of high frequency	Acoustic sensing	Motion sensing	Motion sensing	Motion sensing	Motion sensing
Enclosure	Electronics housing, Makrolon IP65, sensor, stainless steel material number W.-Nr. 1.4571 (316Ti SST)	Compact 304 or 303 stainless steel, IP68	Type 4X/NEMA 4X/IP65 polycarbonate	Polycarbonate	Type 4X/NEMA 4X/IP67 aluminum	Type 4X/NEMA 4X/IP67 aluminum
Sensor mounting	Screw to outside of pump housing. For material flow monitoring on the outside of pipes, channels, chutes or raceways	Sensor non-invasive: glue or weld-on disc, bolt or weld-on tab, drill and tap	Non-contacting probes secured with supplied flange	Non-contacting probes secured with supplied flange	Non-contacting probe secured with supplied flange	Non-contacting, secured with supplied flange
Operating temperature	Electronics: -20 ... +60 °C (-4 ... +140 °F) Sensor: -20 ... +110 °C (-4 ... +230 °F)	-20 ... +80 °C (-4 ... +176 °F)[1]	-20 ... +50 °C (-4 ... +122 °F)[2]	-20 ... +50 °C (-4 ... +122 °F)	-40 ... +60 °C (-40 ... +140 °F)	-40 ... +60 °C (-40 ... +140 °F)
Power requirements	19 V ... 36 V DC, < 100 mA	20 ... 30 V DC, 18 mA	100/115/200/230 V AC ± 10 % 50/60 Hz, 15 VA	100 ... 240 V AC, 50/60 Hz, 0.7 ... 0.35 A per LOGO! power module	21 ... 28 V DC, 40 mA max.	115 or 230 V AC ± 10 % 50/60 Hz, 7 VA
Approvals	CE, PROFIBUS DP, and PROFIBUS PA conform, Ex protection to ATEX 1G or 1D	CE, RCM, CSA/FM Class II, Div. 1, Groups E, F, G optional, ATEX II, 2GD, 3D optional, EAC	$CSA_{US/C}$, CE, RCM	CE, $CSA/UL_{C/US}$, FM, EAC, RCM, KCC	CE, RCM	$CSA_{US/C}$, CE, RCM

[1] Extended temperature model -40 ... +125 °C (-40 ... +257 °F) available (CE version)

[2] Probes available for -40 ... +260 °C (-40 ... +500 °F)

© Siemens 2020

Overview

The SITRANS DA400 acoustic diagnostic unit acoustically measures the structure-borne noise

- In the version for pump monitoring; on oscillating displacement pumps
- In the version for material flow monitoring; on pipes, conveying equipment or channels.

It comprises an electric diagnostic unit and up to four acoustic sensors.

Benefits

Benefits when pump monitoring

- Increased availability of the system through:
  - Advanced maintenance planning thanks to early recognition of defective components
  - Reduced downtimes (no fault locating necessary)
  - Increased maintenance intervals
  - Greater pump reliability
- Prevention of expensive consequential damage
- Increased safety of critical applications
- Early recognition of a reduction in power
- Increased productivity

Benefits when material flow monitoring

- Detection of insufficient or excessive inflow of material in a liquid or gas flow
- Detection of blockages or clogging
- Reduction of down times
- Increased product quality
- Increased availability
- Guaranteed operational safety
- Increased productivity

Application

In the version for pump monitoring, the SITRANS DA400 allows continuous, simultaneous and independent monitoring of up to four flow control valves in a pump for leaks. In addition, another four inputs are available for monitoring standard signals (e.g. diaphragm and temperature monitoring). This means that the condition of an oscillating displacement pump is monitored in every phase of its operation.

The SITRANS DA400 is used in all industries where an oscillating displacement pump is used.

The version for material flow monitoring monitors the material flow in liquids or gases that is usually as a result of impact or friction, e.g. against the pipe or channel wall.

If the acoustic diagnostic unit is used in potentially explosive areas, the sensors as well as the acoustic diagnostic unit can be installed in the Ex-zone.

If using the unit in potentially explosive areas, you have two options:

- Operation of the sensors over the safety barriers or
- Operation of the sensors over the SITRANS DA400 with explosion protection

Function

Product features

Continuous and independent status monitoring:

- Of the flow control valves, for leaks
- Of the membranes, for material fatigue
- Of the temperature loading of the hydraulic oil
- Of flowing bulk solids in pipes, conveying equipment or channels

Communication of the status to superordinate control systems:

- Via digital outputs
- Digitally, via PROFIBUS DP or PROFIBUS PA

Simple to operate and parameterize:

- Locally, via digital display and keys
- PROFIBUS DP and PROFIBUS PA

Mode of operation

Principle of measurement

Leaks in the flow control valves of oscillating displacement pumps are flows in which cavitation occurs. This results in sound waves that are transmitted to the valve housing, where they are recorded by the structure-borne sound sensor in the SITRANS DA400 on the outside.

The SITRANS DA400 utilizes the fact that with both an open valve and a closed intact valve, no cavitation occurs and the measured sound level thus corresponds to the operating noise of the pump. By contrast, with a closed defective valve cavitation does occur, which can be identified by a period increase in the sound level (see figures). The measured value from the SITRANS DA400 corresponds exactly to this increase in the sound level.

In the version for material flow monitoring, SITRANS DA400 continuously detects high-frequency acoustic oscillations by means of structure-born noise sensors.

© Siemens 2020

Function (continued)

These oscillations are created by:

- Friction and impact of bulk solids in:
  - pipes, raceways or channels
  - chutes
  - conveyors
- Friction and impact of mechanical parts
- Bursting of bubbles
- Cavitation
- Turbulence in gas and liquid flows

The following shows an example of signal levels at an oscillating displacement pump

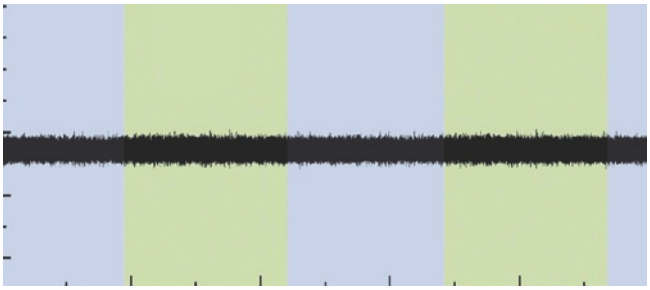

Signal from structure-borne sound sensor with intact valve

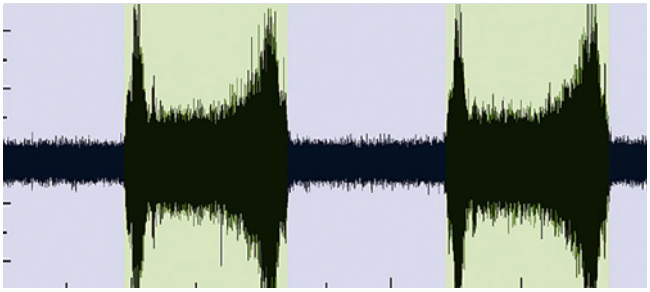

Signal from structure-borne sound sensor with defective valve

Sensor operation

The structure-borne sound sensor works on the piezoelectric principle. The structure-borne sound is injected into the sensor via the sensor base (mounting surface) and inside it is converted into an electrical voltage by a piezo-ceramic element. This is amplified in the sensor and transmitted via the cable.

The sensor frequency range lies in the ultrasonic range (> 20 kHz). The sensor is non-directional, i.e. the angle at which the sound wave impacts on the sensor base is not important.

Mode of operation of the safety barrier

The safety barrier comprises intrinsically-safe circuits. These circuits serve to operate intrinsically-safe components such as sensors and to isolate safety from the non-hazardous area with the SITRANS DA400 diagnostic unit.

Technical specifications

SITRANS DA400	Without Ex protection	With Ex protection
Input		
Acoustic channels	4	
• Cycle time	10 ms	
Only for connection to intrinsically safe sensors with:		
• Max. voltage U_o	-	≤ 5.5 V
• Max. current I_o	-	≤ 70 mA
• Max. power P_o	-	≤ 100 mW
• Internal capacitance C_i	-	≤ 1.2 µF
• Internal inductance L_i	-	Negligible
Universal inputs	4	
• Cycle time	80 ms	
• Low pass filter time	1 s	
Universal analog current input		
• Load	< 105 Ω	< 12 Ω
• Resolution	0.1 %	
• Accuracy	0.5 %	
• Fault signal	> 21 mA or < 3.6 mA (at 4 ... 20 mA)	
• Alarm monitoring hysteresis	0.5 %	
• Static destruction limit	40 mA, 4 V	-
For connection with approved intrinsically safe circuits with:		
• Max. supply voltage U_i	-	≤ 30 V
• Max. short-circuit current I_i	-	≤ 100 mA
• Max. power P_{oi}	-	≤ 1 W
• Internal capacitance C_i	-	≤ 11 nF
• Internal inductance L_i	-	≤ 70 µH
Universal input 24 V digital signal		
• Input resistance	> 19 kΩ	
• Signal level Low	< 4.5 V or open	
• Signal level High	> 7 V	
• Hysteresis	> 1 V	
• Static destruction limit	± 40 V	-
For connection with approved intrinsically safe circuits with:		
• Max. supply voltage U_i	-	≤ 30 V
• Max. short-circuit current I_i	-	≤ 100 mA
• Max. power P_{oi}	-	≤ 1 W
• Internal capacitance C_i	-	≤ 11 nF
• Internal inductance L_i	-	≤ 70 µH
Universal input closing contact		
• For connection to closing contact with the maximum values:		
- Max. voltage U_o	-	≤ 10 V
- Max. current I_o	-	≤ 1 mA
- Max. power P_o	-	≤ 5 mW
- Internal capacitance C_i	-	≤ 11 nF
- Internal inductance L_i	-	≤ 70 µH
8.2 V source for NAMUR signal (DIN EN 60947-5-6)		
• Open circuit voltage	8.2 V ± 0.3 V, short-circuit proof	-
• Input resistance	< 950 Ω	-
• Static destruction limit for incorrect wiring	+20 V/-10 V	-

© Siemens 2020

Technical specifications (continued)

SITRANS DA400	Without Ex protection	With Ex protection
Output		
Digital outputs	6	6 (applicable for NAMUR switch hardener)
• Semiconductor relay	Individually isolated, short circuit-proof	-
• Switching voltage	24 V AC/36 V DC, any polarity	-
• Destruction limit	35 V AC, 50 V DC	-
• Max. switching current	100 mA	-
• Signal status Low (no response)	-	≤ 1.2 mA (source to DIN 19234)
• Signal status High (response)	-	≥ 2.1 mA (source to DIN 19234)
For connection with an intrinsically safe switching amplifier to DIN 19234 with:		
• Max. supply voltage U_i	-	≤ 15.5 V
• Max. short-circuit current I_i	-	≤ 25 mA
• Max. power P_{oi}	-	≤ 64 mW
• Internal capacitance C_i	-	≤ 5.2 nF
• Internal inductance L_i	-	Negligible
Conditions of use		
Installation conditions	Vertical wall mounting, cables fed in from below	
Climatic class	Class 4K4 according to EN 60721-3-4	
Mounting location	-	Zone 1 or zone 2
Permissible ambient temperature	-20 ... +60 °C (-4 ... +140 °F)	-
• Temperature class T5 ... T1		-20 ... +60 °C (-4 ... +140 °F)
• Temperature class T6		-20 ... +50 °C (-4 ... +122 °F)
Storage temperature	-20 ... +60 °C (-4 ... 140 °F)	
Mechanical load	Class 4M3 according to EN 60721-3-4	
Degree of protection to EN 60529	IP65	
Electromagnetic Compatibility		
• Emitted interference and interference immunity	To EN 61326 and NAMUR NE 21	
Usage limits for water		
• Delivery side	≥ 10 bar a	
• Number of strokes	Min. 4 min^{-1}, max. 10 ... 500 min^{-1}	
Design		
Weight (without options)	Approx. 2.5 kg	
Dimensions (W x H x D) in mm (inch)	172 x 320 x 80 (6.8 x 12.6 x 3.2)	
Enclosure material	Macrolon (polycarbonate + 20 % glass fiber)	Makrolon (Polycarbonate + 20 % glass fibers), surface attenuated with CrNi layer and painted
Electrical connection via screw terminals	• Rigid 2.5 mm (0.984 inch) • Flexible 1.5 mm (0.59 inch) • Flexible with connector sleeves 1.5 mm (0.59 inch)	
Cable inlet via plastic cable joints	• 2 x Pg 13.5 • 5 x Pg 11	

SITRANS DA400	Without Ex protection	With Ex protection
Power supply		
Rated voltage	24 V DC	16 V DC
Operating range	19 ... 36 V DC	15 ... 17 V DC
Current consumption	< 100 mA	< 40 mA
For connection with approved intrinsically safe circuits with:		
• Max. supply voltage U_i	-	≤ 17.4 V
• Max. short-circuit current I_i	-	≤ 191 mA
• Max. power P_{oi}	-	≤ 1.35 W
• Internal capacitance C_i	-	≤ 33 nF
• Internal inductance L_i	-	≤ 28 µH
Certificates and approvals		
Explosion protection to EN 50014, EN 50020 and EN 50021		
Intrinsic safety "i"	-	TÜV (German Technical Inspectorate) 06 ATEX 2952
Marking	-	II 2(1) G EEx is [ia] IIC T6
Communication		
PROFIBUS DP	RS 485, switchable terminating resistor	
Protocol	Cyclic with Master C1 and acyclic with Master C2	
Power supply	-	Bus-supplied
Bus voltage	-	9 ... 24 V
Current consumption	-	10.5 mA ± 10 %
Bus connection with FISCO supply unit, ia/ib group IIC or IIB	-	Yes
Layer 1 and 2 from PROFIBUS PA, transfer technology from IEC 1158-2	-	
• C2 connections	-	4 connections are supported in master class 2
• Device profile	-	PROFIBUS PA Profil V3.0 Rev. 1, Class B
• Device address	-	1 ... 126 (126 factory-set)
PC parameterization software	SIMATIC PDM (not included in the scope of delivery)	

© Siemens 2020

Technical specifications (continued)

Sensor for SITRANS DA400	
Setup	• Piezoceramic sensor with pre-amplifier • Encapsulated electronics • 4-wire cable with anti-kink sleeve
Conditions of use	
Permissible ambient temperature	-40 ... +110 °C (-40 ... +230 °F)
Degree of protection to EN 60529	P66/IP68
Mechanical load	Class 4M7 according to EN 60721-3-4
Climatic class	Class 4K4 according to EN 60721-3-4
Design	
Housing material	Stainless steel 1.4571 (316Ti SST)
Cable	Ends with wire protectors and cable shoe for connection to the SITRANS DA400
Weight	125 g (0.276 lb)
Mounting location	Zone 0/1 or zone 20/21/22
Dimensions (W x H x D) in mm (inch)	26 x 29 x 40 (1.02 x 1.14 x 1.57)
Power Supply	Power fed from device
Certificates and approvals	
Explosion protection	
Intrinsic safety "i"	TÜV 2005 ATEX 2876 X
Marking	II 1 G EEx ia IIC T6/T5/T4 or II 1 D EEx ia D 20/21/22 T160
Permissible ambient temperature	
Category 1G	
- Temperature class T4, T5	-20 ... +60 °C (-4 ... +140 °F)
- Temperature class T6	-20 ... +50 °C (-4 ... +122 °F)
• Category 2G	
- Temperature class T4	-40 ... +110 °C (-40 ... +230 °F)
- Temperature class T5	-40 ... +80 °C (-40 ... +176 °F)
- Temperature class T6	-20 ... +65 °C (-4 ... +149 °F)
• Category 1D or 2D	
- Temperature class T160	-40 ... +110 °C (-40 ... +230 °F)

Ex barriers for sensors	
Application area	For the intrinsically safe supply of the acoustic sensors in zone 1; the safety barriers must be installed between the SITRANS DA400 acoustic diagnostic unit and the sensor if only the sensors are being operated in the Ex zone.
Input	A maximum of two sensors can be connected.
Conditions of use	
Degree of protection to EN 60529	IP20
Permissible Ambient Temperature	-20 ... +60 °C (-4 ... +140 °F)
Design	
Weight	115 g (0.254 lb)
Housing material	Plastic, polyamide
Type of installation	Installation on mounting rail NS 32 or NS 35/7.5. The acoustic diagnostic unit SITRANS DA400 and the safety barrier must be operated outside the Ex zone.
Dimensions (W x H x D) in mm (inch)	68 x 77 x 42 (2.68 x 3.03 x 1.65)

Ex barriers for sensors	
Certificates and Approvals	
Explosion protection	
Intrinsic safety "i"	TÜV 05 ATEX 2917 X
Marking	II (2) G [EEx ib] IIC

Selection and ordering data

	Article No.
SITRANS DA400 Acoustic diagnostic unit ↗ Monitors material flow in pipes, leakage in valves or oscillating pumps with up to 4 independent acoustic sensors. ↗ Click on the Article No. for the online configuration in the PIA Life Cycle Portal.	**7MJ2400-** ■ ■ **A 0** ■
Communication	
• PROFIBUS DP	**1**
• PROFIBUS PA	**2**
Explosion protection	
• Without	**A**
• With EEx ia/ib to ATEX[1]	**B**
Application software	
For continuous condition monitoring of positive displacement pumps	**1**
For material flow monitoring in pipes, raceways and conveyors	**2**
SITRANS DA400 Acoustic diagnostic unit ↗ Monitors material flow in pipes, leakage in valves or oscillating pumps with up to 4 independent acoustic sensors. ↗ Click on the Article No. for the online configuration in the PIA Life Cycle Portal.	**7MJ2000-1** ■ ■ **0 0**
Explosion protection	
• Without	**A**
• With EEx ia to ATEX	**B**
Cable	
(incl. pin and allen screw M6)	
20 m	**B**
40 m	**C**
100 m	**F**
Safety barriers for sensors For rail mounting NS 32 and NS35/7.5 in non-hazardous areas Explosion-protected output circuit EEx ib	**7MJ2010-1AA**

[1] Not in combination with trigger sensor.

© Siemens 2020

Dimensional drawings

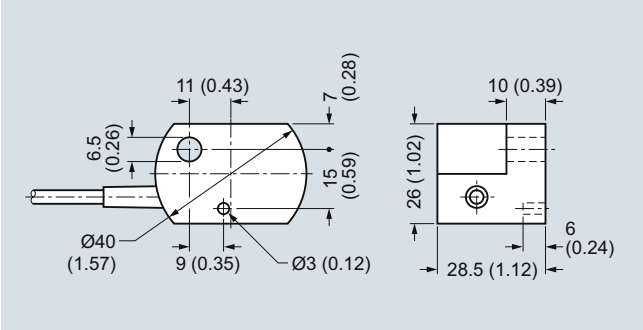

Sensor for SITRANS DA400, dimensions in mm (inch)

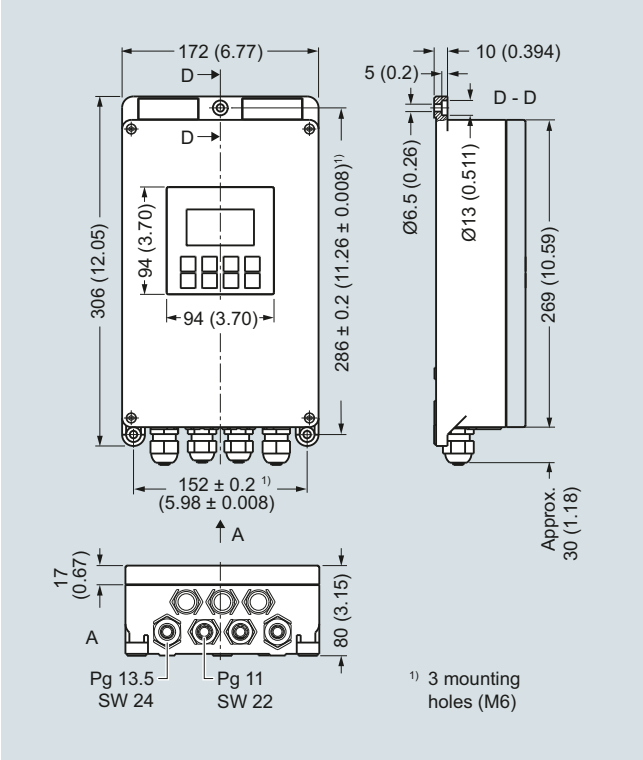

SITRANS DA400, dimensions in mm (inch)

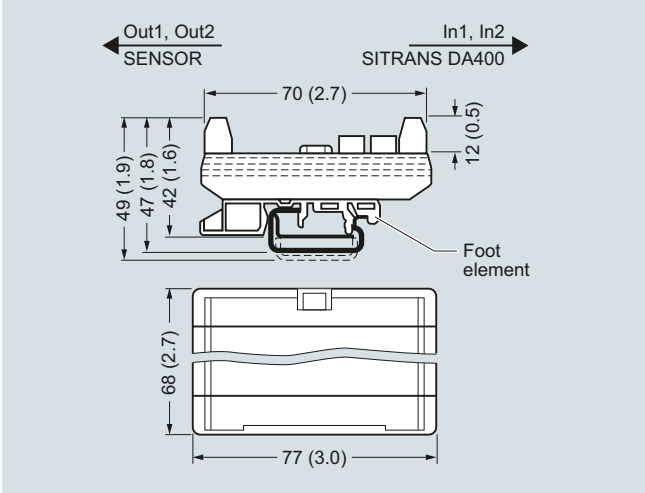

Safety barrier for SITRANS DA400, dimensions in mm (inch)

© Siemens 2020

Circuit diagrams

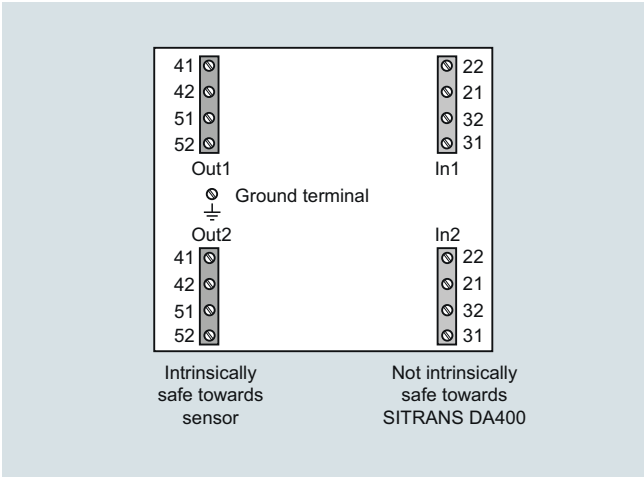

Safety barrier for SITRANS DA400, terminal assignment

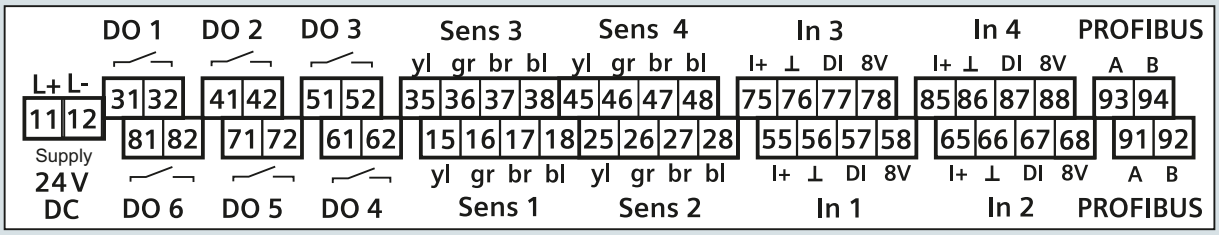

L+/L-	Power supply (Any polarity with PROFIBUS PA)	In	Input	⊥	Ground
DO	Digital output	yl	Yellow	DI	Digital input
Sens	Sensor	gr	Green	A	Signal A (green) with PROFIBUS DP, any with PROFIBUS PA
		br	Brown	B	Signal B (red) with PROFIBUS DP, any with PROFIBUS PA
		bl	Black		
		I+	Analog current input +		

SITRANS DA400, terminal assignment

© Siemens 2020

Overview

SITRANS AS100 is an acoustic sensor used for solids flow detection.

Benefits

- Non-invasive
- Screw in, bolt on, weld, or bond in place
- Analog output
- High and low sensitivity range of operation

Application

SITRANS AS100 detects changes in high frequency sound waves from equipment and materials in motion. It detects and reacts instantly to changes in solids flow to warn of blockages, product absence, or equipment failure such as burst filter bags. This allows an operator to take early preventative action and avoid costly damage.

Common applications include pellets, powders and most bulk solids in pipes, chutes, vibratory feeders, pneumatic conveyors or aerated gravity flow systems.

Operating with a SITRANS CU02 control unit, the system detects conditions of high flow, low flow or no flow. It can be added to a control loop via a 4 to 20 mA output.

Two relays are fully programmable and independent of each other and can be used to operate an alarm or control device.

With no moving parts and a type 304 or 303 stainless steel enclosure sealed against dust and moisture, this non-invasive unit requires little or no maintenance. With a dual operating range, the sensor offers an exceptionally wide range of application capabilities.

- Key applications: pipes, chutes, vibratory feeders, aerated gravity flow systems, burst filter bag detection

Design

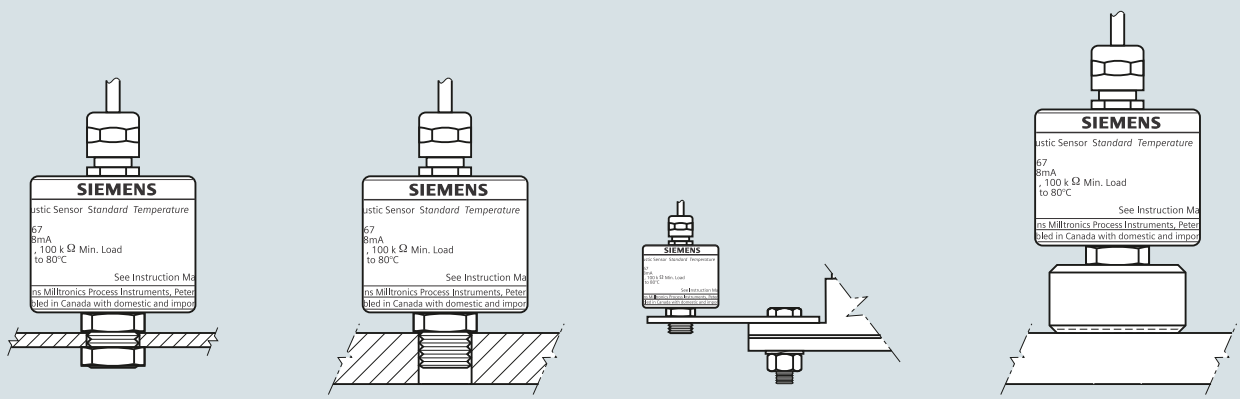

Clearance hole
Insert mounting post through hole in device being monitored and fasten with customer-supplied washers and nut.

Drill and tap
Screw mounting post into threaded hole in device being monitored.

Extension tab
Screw sensor into threaded hole of tab, and fasten onto device being monitored.

Mounting disc
Screw sensor into disc, after welding or bonding disc onto device being monitored.

SITRANS AS100 mounting

© Siemens 2020

SITRANS AS100 Acoustic sensor

Technical specifications

Mode of Operation	
Operating principle	Acoustic sensing of high frequency emissions caused by impact or friction
Typical application	• Detects burst filter bags in dust collection systems • Detects material being conveyed in pneumatic conveyor lines • Route confirmation in chute work
Model	
Standard	Standard operating temperature range
Extended	Extended operating temperature range
Operation	
Relative sensitivity	0.5 %/°C of reading, average over the operating range
Outputs	Analog, 0.08 ... 10 V DC nominal, 100 kΩ minimum load impedance
Rated operating conditions	
Amb. temperature for enclosure	
• Standard	-20 ... +80 °C (-4 ... +176 °F)
• Extended	• -40 ... +125 °C (-40 ... +257 °F) (CE only) • -30 ... +120 °C (-22 ... +248 °F) option
Storage temperature	
• Standard	-20 ... +80 °C (-4 ... +176 °F)
• Extended	• -40 ... +125 °C (-40 ... +257 °F) (CE only) • -30 ... +120 °C (-22 ... +248 °F) option
Design	
Weight	0.4 kg (1 lb)
Enclosure	Enclosure: 304 (1.4301) stainless steel [303 stainless steel (1.4305) on Class II version, aluminum 231 on 2GD version]
Degree of protection	IP68 (waterproof)
Cable	
• Standard	4 m (13 ft) cable, PVC jacketed, 3 twisted pairs, 24 AWG (0.25 mm^2), shielded
• Extended	4 m (13 ft) cable, thermoplastic elastomer jacketed, 6 conductor, 24 AWG (0.25 mm^2) conductor, shielded
Power supply	20 ... 30 V DC, 18 mA (typical)
Certificates and approvals	CE, RCM, EAC, KCC CSA/FM Class II, Div. 1, Group E, F, and G (optional), ATEX II 2GD (optional), ATEX II 3D (optional), EAC Ex

Selection and ordering data

	Article No.
SITRANS AS100 Acoustic sensor ↗ Non-invasive, for detection of solids flow. ↗ Click on the Article No. for the online configuration in the PIA Life Cycle Portal.	**7MH7560-** ■ ■ ■ **0** ■
Sensor	
Standard temperature range [-20 ... +80 °C (-4 ... +176 °F)][1]	**1**
Extended temperature range [-40 ... +125 °C (-40 ... +257 °F)][2]	**3**
Extended temperature range [-30 ... +120 °C (-22 ... +248 °F)][3]	**4**
Cable Length	
4 m (13.12 ft)	**A**
Sensor Mounting	
None	**A**
Mounting disk	**B**
Mounting tab	**C**
Approvals	
CE, RCM, EAC, KCC	**1**
CSA/FM Class II, Div. 1, Group E, F, and G (includes ½" NPT female fitting)	**3**
CSA Class II, Div. 1, Group E, F, and G (includes ½" NPT female fitting)	**4**
CE, RCM, FM/CSA Class II, Div. 1, Group E, F and G, ATEX II 3D (includes M20 female fitting), EAC Ex	**5**
ATEX II 2GD, c/w cable gland, EAC Ex[4]	**6**

[1] Available with approval options 1, 3, 5, and 6 only.
[2] Available with approval option 1 only.
[3] Available with approval option 4 only.
[4] Available with sensor option 1 only and sensor mounting option A only.

Selection and ordering data

	Order code
Further designs	
Please add "**-Z**" to Article No. and specify Order code(s).	
Manufacturer's test certificate: According to EN 10204-2.2	**C11**
Acrylic coated, stainless steel tag [12 x 45 mm (0.5 x 1.75 inch)]: Measuring-point number/identification (max. 16 characters), specify in plain text	**Y17**
Operating Instructions	
All literature is available to download for free, in a range of languages, at http://www.siemens.com/processinstrumentation/documentation	
Spare Parts	Article No.
Mounting tab	**7MH7723-1AA**
Mounting disk	**7MH7723-1AB**
½" NPT adapter kit for standard temperature range sensor, not Class II approved	**7MH7723-1BW**
M20 adapter kit for standard temperature range sensor, not Class II or ATEX approved	**7MH7723-1BV**
½" NPT adapter kit for extended temperature range sensor, not Class II approved Note: Adapter kits are not CSA Class II approved	**7MH7723-1BX**

© Siemens 2020

Dimensional drawings

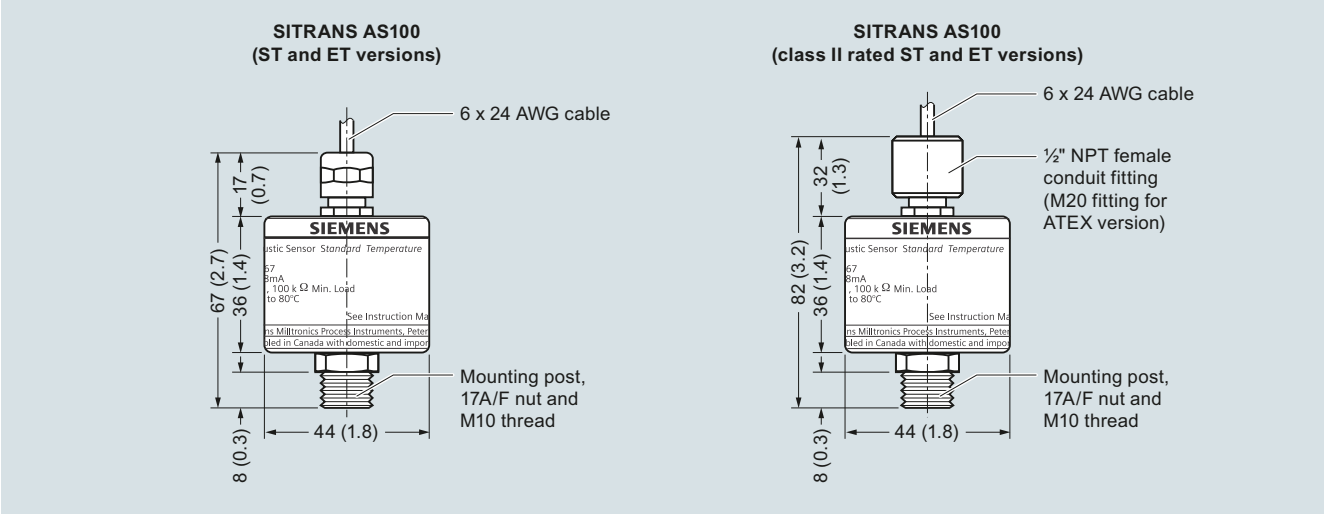

SITRANS AS100, dimensions in mm (inch)

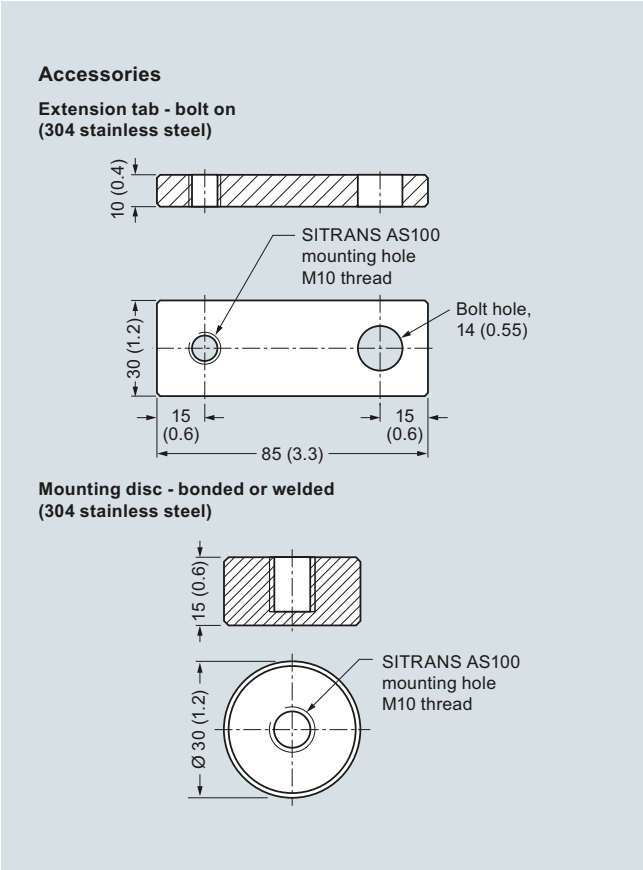

SITRANS AS100 accessories, dimensions in mm (inch)

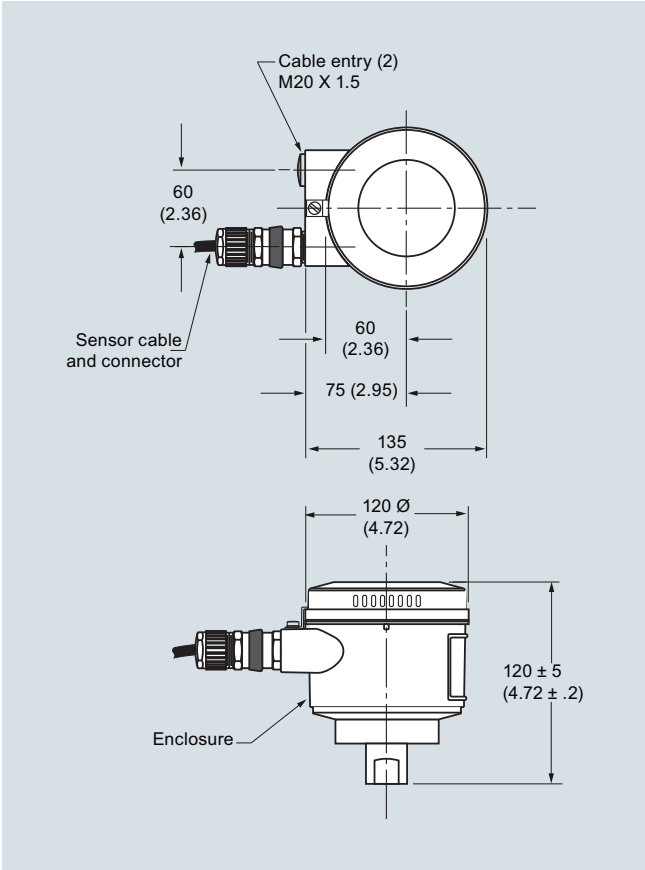

SITRANS AS100 (2D, 2G, XP version), dimensions in mm (inch)

© Siemens 2020

Circuit diagrams

Standard temperature range

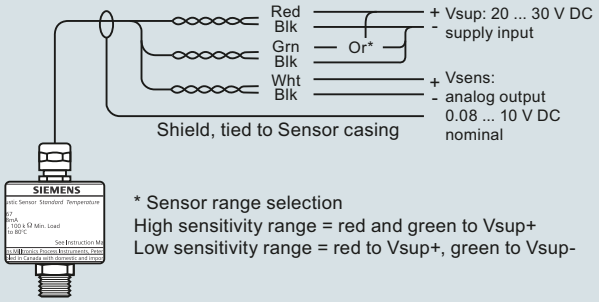

* Sensor range selection
High sensitivity range = red and green to Vsup+
Low sensitivity range = red to Vsup+, green to Vsup-

Extended temperature range

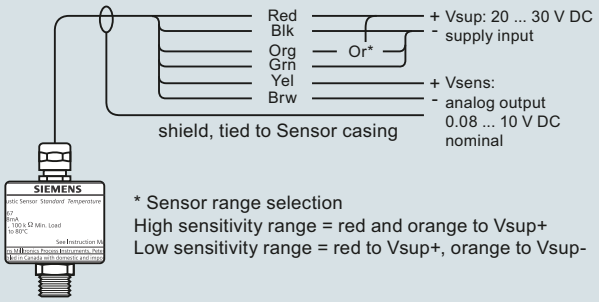

* Sensor range selection
High sensitivity range = red and orange to Vsup+
Low sensitivity range = red to Vsup+, orange to Vsup-

Interconnection
The longer the cable, the more susceptible it is to noise and earth loops. It is therefore recommended to use cable with heavy gauge conductors and good RF/electrical shielding (copper braid rather than drain and foil). A proper junction box close to the sensor is an ideal location not only to extend the cable but also to configure the wiring for high or low sensitivity range operation.
The following table provides a guideline for suitable wire gauges where distances are considerable.

Max. distance between sensor and supply
(24 V or Control Unit).

	Wire size		Distance	
AWG	mm	mm²	meters	feet
24	7 x 0.20	0.25	500	1 600
22	7 x 0.25	0.35	800	2 600
20	10 x 0.25	0.5	1 200	3 900

SITRANS AS100 connections

© Siemens 2020

Overview

SITRANS CU02 is an alarm control unit, for use with SITRANS AS100 acoustic sensor, that provides reliable continuous protection for bulk solids flow.

Benefits

- 4 to 20 mA output
- Two programmable relays
- Adjustable independent time delay for each relay
- Adjustable start-up time delay
- DIN rail mounting provides easy installation
- Built-in password protection to parameters

Application

SITRANS CU02 receives a 0 to 10 V DC input signal from the SITRANS AS100 sensor, providing relay and analog outputs for interface into a process.

- Key applications: with SITRANS AS100 for bulk solids flow

Function

The system can be readily configured for set points indicating such conditions as high flow, low flow or no flow. Alternatively, it can be added to a control loop via a 4 to 20 mA isolated output for trend monitoring proportional to the signal from the sensor.

Two relays are fully programmable and independent of each other and can be used to operate an alarm or control device. Alarming may be provided above or below a setpoint or within a band. Readings are also displayed locally by the SITRANS CU02 on its LCD.

The SITRANS CU02 may be mounted up to 500 m (1 500 ft) from the sensor.

Technical specifications

Mode of operation	
Measuring principle	Controller for acoustic sensing (SITRANS AS100)
Typical application	Connects to SITRANS AS100 to detect burst filter bag
Input	0 … 10 V DC, from sensor
Output	
Output signal	4 … 20 mA isolated output, 2 Form C relays - latching or non-latching - 5 amp at 250 V AC non-inductive
Sensor excitation	26 V DC
Max. load	750 Ω
Rated operating conditions	
Installation conditions	
• Location	Indoor
Ambient conditions	
• Ambient temperature for enclosure	-20 … +50 °C (-4 … +122 °F)
• Storage temperature	-20 … +50 °C (-4 … +122 °F)
• Relative humidity	80 % for temperatures up to 50 °C (122 °F)
• Degree of protection	IP20
• Installation category	II
• Pollution degree	2
Design	
Weight	550 g (18 oz)
Dimensions (W x H x D)	55 x 75 x 110 mm (2.2 x 3 x 4.4 inch)
Material enclosure	Polycarbonate
Mounting	DIN Rail (DIN 46277 or DIN EN 50022), or wall mount, up to 500 m (1 500 ft) from sensor
Cable	2 twisted pair, 24 AWG (22 mm²), shielded. Mount up to 500 m (1 500 ft) from sensor
Display	Liquid crystal, three digits, 9 mm (0.35 inch), high and multi-segment graphic symbols for operation status
Power supply	
Supply voltage	100, 115, 200, 230 V AC ± 15 %, 50/60 Hz, factory set
Power consumption	Max. 10 VA
Approvals	$CSA_{US/C}$, CE, RCM, EAC, KCC

© Siemens 2020

SITRANS CU02 Control Unit

Selection and ordering data

Selection and ordering data	Article No.
SITRANS CU02 Control unit ↗	**7MH7562-**
Set-point alarm controller, for use with AS100 acoustic sensor.	
↗ Click on the Article No. for the online configuration in the PIA Life Cycle Portal.	
Power Supply	
100 V AC	**1**
115 V AC	**2**
200 V AC	**3**
230 V AC	**4**
Enclosure	
Standard DIN Rail	**A**
Approvals	
$CSA_{US/C}$, CE, RCM, EAC, KCC	**A**

Selection and ordering data	Order code
Further designs	
Please add "**-Z**" to Article No. and specify Order code(s).	
Manufacturer's test certificate: According to EN 10204-2.2	**C11**
Acrylic coated, stainless steel tag [38 x 51 mm (1.5 x 2 inch)]: Measuring-point number/identification (max. 16 characters), specify in plain text	**Y18**
Operating Instructions	
All literature is available to download for free, in a range of languages, at http://www.siemens.com/processinstrumentation/documentation	

Dimensional drawings

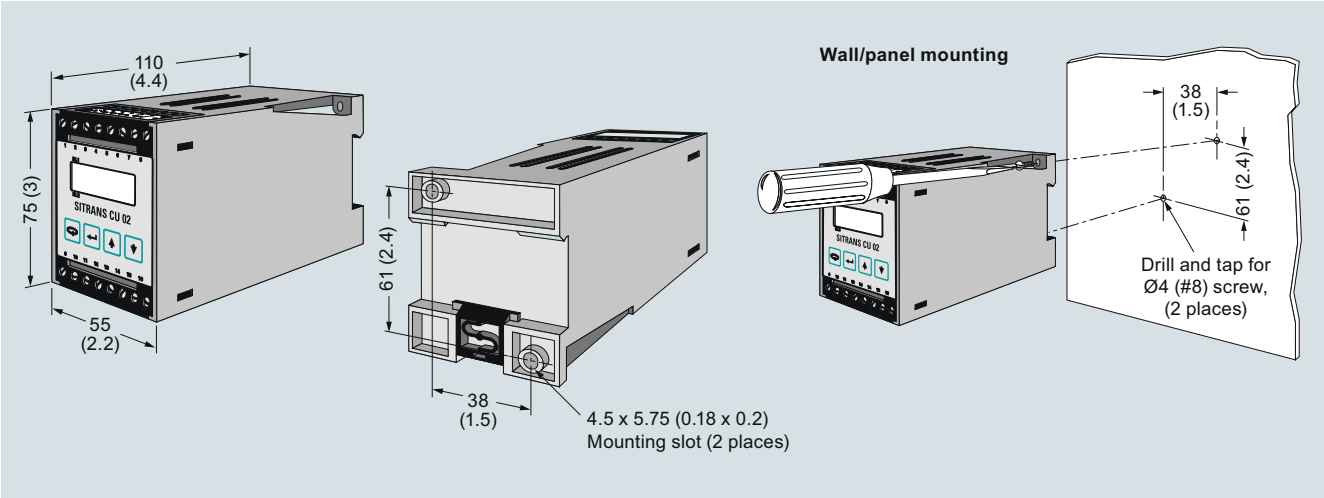

SITRANS CU02, dimensions in mm (inch)

© Siemens 2020

Circuit diagrams

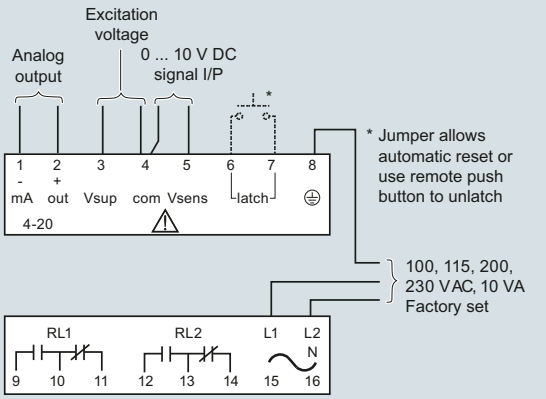

Standard temperature version

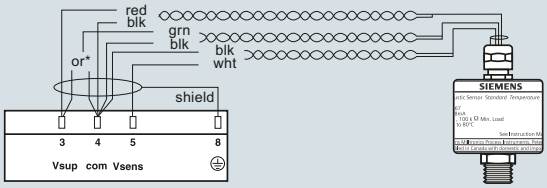

* Sensor range selection
High sensitivity range = green to 'Vsup'
Low sensitivity range = green to 'com'

Extended temperature version

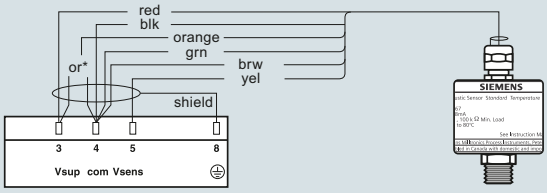

* Sensor range selection
High sensitivity range = orange to 'Vsup'
Low sensitivity range = orange to 'com'

Mounting
Installation shall only be performed by qualified personnel and in accordance with local governing regulations.
This product is susceptible to electrostatic shock. Follow proper grounding procedures.

Interconnection
All field wiring must have insulation suitable for at least 250 V.
Relay contact terminals are for use with equipment having no accessible live parts and wiring having insulation suitable for at least 250 V.
The maximum allowable working voltage between adjacent relay contacts shall be 250 V. If sensor case is grounded, do not connect shield of cable to SITRANS CU02 ground terminal.

SITRANS CU02 connections

© Siemens 2020

Milltronics MFA 4p Motion failure alarm controller

Overview

MFA 4p motion failure alarm controller is a highly sensitive single setpoint motion sensor system, used with Milltronics MSP probes.

Benefits

- Up to 100 mm (4 inch) gap between target and probe
- Switch selectable overspeed or underspeed detection
- Setpoint adjustment 0.15 to 3 000 PPM (pulses/minute)
- Adjustable start-up time delay
- Visual indication of probe operation and relay status
- General purpose, suitable for majority of industrial applications; rugged probe designs provide unmatched reliability

Application

The MFA 4p detects changes in the motion and speed of rotating, reciprocating or conveying equipment. It warns of equipment malfunction and signals through contacts to shut down machinery in case of a slowdown or failure. Its reliability makes it a cost-effective way to protect valuable process equipment.

The single setpoint system suits most industrial applications. This versatile unit can be used on tail pulley shafts, driven pulleys, motor shaft sensing, belt or drag conveyors, screw conveyor flights, bucket elevators, fans and pumps.

A special feature is the adjustable 0 to 60 second time delay, allowing the monitored device to accelerate to normal running speed before monitoring begins. A wide range of probes are available to suit specific needs, including high temperatures and corrosive installations. The CE approval allows the MFA 4p to consistently meet the needs of the mining aggregate, cement and other primary and secondary industries.

- Key Applications: tail pulleys, motor shaft sensing, screw conveyor flights, bucket elevators

© Siemens 2020

Design

Mounting for Milltronics MSP-12, MSP-3, XPP-5

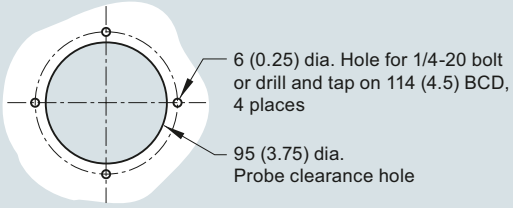

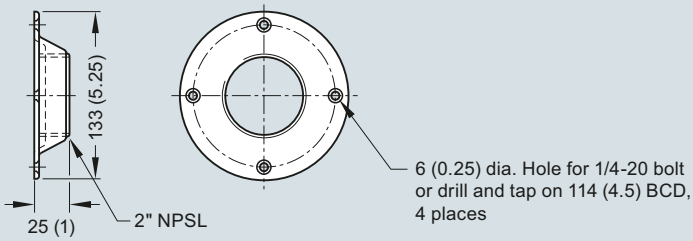

Note: Mounting flange supplied with probe.

Mounting for Milltronics MSP-9

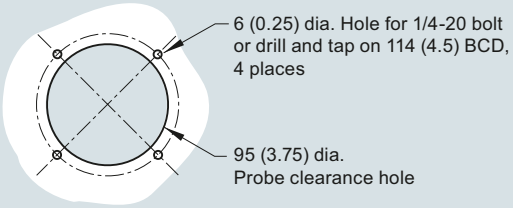

Panel

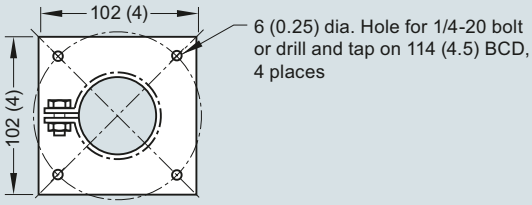

Probe flange

Milltronics MSP-12, MSP-3, MSP-9, XPP-5 mounting, dimensions in mm (inch)

Standard Milltronics MSP-12
- Heavy-duty general purpose motion probe
- Long lasting aluminum body with internal amplifier
- Convenient mounting flange and locknut for fast installation and setup
- Temperature rating: -40 ... +60 °C (-40 ... +140 °F)
- Enclosure rating: Type/NEMA 4X, 6, IP67

Milltronics XPP-5
- CSA hazardous approval (Class I, Div. 1, Groups A, B, C, D; Class II Div. 1, Groups E, F, G; Class III)
- Aluminum body that is fully potted
- Convenient mounting flange and locknut
- 3/4" NPT male hub connection
- Operating temperature from -40 ... 60 °C (-40 ... 140 °F)
- Enclosure rating: Type/NEMA 4X,6, IP67

High temperature Milltronics MSP-3
- Heavy-duty, high temperature aluminum probe designed to withstand operating temperatures from -50 ... 260 °C (500 °F)
- Cast aluminum probe with convenient mounting flange and locknut
- 1.5 m (5 ft) of high temperature PTFE cable provided. Up to 30 m (100 ft) may be used.
- Amplifier remote mounted in enclosure 140 x 140 x 100 mm (5.5 x 5.5 x 4 inch), available in cast aluminum (½" NPT conduit entry), painted steel (Type/NEMA 4, IP65 rating), or stainless steel (Type/NEMA 4X, IP65 rating)
- Amplifier temperature rating -40 ... +60 °C (-40 ... +140 °F)
- Enclosure rating: Type/NEMA 4X, 6, IP67

Stainless high temperature Milltronics MSP-9
- Heavy-duty, high temperature 304 stainless steel probe
- Special construction allows operation of probe in environment from -50 ... 260 °C (500 °F)
- 1.5 m (5 ft) special high temperature PTFE cable provided. Up to 30 m (100 ft) may be used.
- Amplifier remote mounted in enclosure 140 x 140 x 100 mm (5.5 x 5.5 x 4 inch), available in cast aluminum (½" NPT conduit entry), painted steel (Type/NEMA 4, IP65 rating), or stainless steel (Type/NEMA 4X, IP65 rating)
- Enclosure rating: Type/NEMA 4X, 6, IP67
- Amplifier temperature rating -40 ... +60 °C (-40 ... +140 °F)

Milltronics RMA (Remote Mounted Amplifier)
- Available for internal mounting within Probe, or in enclosure for remote mounting
- Enclosures available in cast aluminum (½" NPT entry), painted steel (Type/NEMA 4 rating) or stainless steel (Type/NEMA 4X, IP65 rating)
- Operating temp. from -40 ... +60 °C (-40 ... +140 °F)
- Enclosure rating: Type/NEMA 4X, 6, IP67

Milltronics motion probes

© Siemens 2020

Technical specifications

Mode of operation	
Measuring principle	Motion monitor and alarm
Typical application	Monitoring loss of motion in tail pulley, screw flights, bucket elevators
Features	• Switch selectable overspeed or underspeed detection • Setpoint adjustment: 0.15 ... 3 000 PPM • Adjustable start-up time delay: 0 ... 60 seconds • Visual indication of probe operation and relay status
Output	2 relays working in unison, each providing 1 SPDT Form C relay contact, rated 8 A at 250 V AC resistive
Performance	
Repeatability	± 1 %
Dead band	± 0.25 %
Dynamic Range	0 ... 7 200 PPM
Ambient Temperature Range	-20 ... +50 °C (-5 ... +122 °F)
Storage temperature	-20 ... +50 °C (-5 ... +122 °F)
Design	
Enclosure rating	Type 4X/NEMA 4X/IP65 (standard and optional stainless steel) Type 4/NEMA 4/IP65 (optional mild steel)
Enclosure dimensions	160 x 240 x 82 mm (6.3 x 9.5 x 3.2 inch) Optional: mild steel or 304 (1.4301) stainless steel 203 x 254 x 102 mm (8 x 10 x 4 inch)
Enclosure material	Polycarbonate Optional: mild steel or stainless steel
Power Supply	100 ... 240 V AC, 50/60 Hz, 15 VA, ± 10 % of rated voltage
Certificates and approvals	CE, RCM, EAC, KCC, $CSA_{US/C}$, FM

© Siemens 2020

Selection and ordering data

	Article No.
Milltronics MFA 4p Motion failure alarm controller ↗ Set-point alarm controller, for use with MSP motion probes. ↗ Click on the Article No. for the online configuration in the PIA Life Cycle Portal.	**7MH7144-** ■ ■ ■ ■
Enclosure	
NEMA 4X, polycarbonate enclosure	**1**
NEMA 4, painted mild steel enclosure	**2**
NEMA 4X, 304 (1.4301) stainless steel enclosure	**3**
Input Voltage	
100 ... 240 V AC, ± 10 %, 50/60 Hz, 15 VA	**A**
Speed detection version	
Standard, underspeed (U/S) or overspeed (O/S), switch selectable	**A**
Slow speed (S/S), U/S or O/S detection, switch selectable (limit of 15 ppm)	**B**
Approvals	
CE, RCM, EAC, KCC, $CSA_{US/C}$, FM	**2**
Further designs	Order code
Please add "**-Z**" to Article No. and specify Order code(s).	
Manufacturer's test certificate: According to EN 10204-2.2	**C11**
Acrylic coated, stainless steel tag [69 x 50 mm (2.7 x 1.97 inch)]: Measuring-point number/identification (max. 27 characters), specify in plain text	**Y15**
Painted mild steel, heated enclosure with viewing window for use down to -50 °C (-58 °F) (finished unit is mounted inside enclosure) [483 x 584 x 203 mm (19 x 23 x 8 inch)]	**A35**
Stainless steel, sun/weather shield (finished unit is field mounted inside enclosure) [357 x 305 x 203 mm (14 x 12 x 8 inch)]	**S50**
Operating Instructions	
All literature is available to download for free, in a range of languages, at http://www.siemens.com/processinstrumentation/documentation	
Spare Parts	Article No.
Circuit Card, standard	**7MH7723-1DU**
Circuit Card, Slow speed	**7MH7723-1DV**
Lid with overlay for MFA 4p	**7MH7723-1GY**

	Article No.
Milltronics RMA Remote mounted amplifier ↗ Remote mounted amplifier for Milltronics MSP-3 and MSP-9 motion sensing probes. ↗ Click on the Article No. for the online configuration in the PIA Life Cycle Portal.	**7MH7145-** **0** ■
Enclosure	
Aluminum enclosure, IP65, Type/NEMA 4X, ½" NPT entry	**A**
Painted steel, Type/NEMA 4, IP65 rating	**C**
304 (1.4301) stainless steel enclosure, Type/NEMA 4X, IP65 rating	**D**
Further designs	Order code
Please add "**-Z**" to Article No. and specify Order code(s).	
Manufacturer's test certificate: According to EN 10204-2.20	**C11**
Acrylic coated, stainless steel tag [38 x 51 mm (1.5 x 2 inch)]: Measuring-point number/identification (max. 16 characters), specify in plain text	**Y18**
Operating Instructions	
All literature is available to download for free, in a range of languages, at http://www.siemens.com/processinstrumentation/documentation	
Spare Parts	Article No.
Card, RMA	**7MH7723-1DT**

© Siemens 2020

Milltronics MFA 4p Motion failure alarm controller

Selection and ordering data	Article No.
Milltronics Motion sensing probes ↗	**7MH7146-**
Heavy duty, 100 mm measuring range, for use with RMA, MFA 4p, WM300 MFA, or other control.	■ ■ ■
Note: Milltronics MSP-3 and MSP-9 probes require the use of Milltronics RMA (amplifier)	
↗ Click on the Article No. for the online configuration in the PIA Life Cycle Portal.	
Cable Length	
Standard length (as described in Model options)[1]	**0**
Add Order code Y01 and plain text: "Total cable length ... m"	
Extended cable length 2 ... 30 m (6.6 ... 98.4 ft)[2]	**1**
Extended cable length 31 ... 50 m (101.7 ... 164 ft)[4]	**2**
Extended cable length 51 ... 100 m (167.3 ... 328.1 ft)[4]	**3**
Model [standard cable length/type]	
MSP-3, ½" NPT cable inlet[3] [1.5 m (5 ft) high temperature cable]	**B**
MSP-9 [1.5 m (5 ft) high temperature cable][3]	**D**
MSP-12, ½" NPT cable inlet, no cable	**E**
XPP-5 [1.5 m (5 ft) cable, (CSA Class I, Groups A, B, C and D; Class II Groups E, F, and G)]	**G**
XPP-5 [10 m (32.8 ft) cable, (CSA Class I, Groups A, B, C, and D; Class II Groups E, F, and G)]	**H**
XPP-5 [15 m (49.2 ft) cable, (CSA Class I, Groups A, B, C, and D; Class II Groups E, F, and G)]	**J**
Approvals	
CE, RCM, EAC, KCC	**A**

Further designs	Order code
Please add "**-Z**" to Article No. and specify Order code(s).	
Total cable length: enter the total cable length in plain text description	**Y01**
Acrylic coated, stainless steel tag [13 x 45 mm (0.5 x 1.75 inch)]: Measuring-point number/identification (max. 16 characters), specify in plain text	**Y17**
Cable gland kit	**A57**
Manufacturer's test certificate: According to EN 10204-2.2	**C11**

Operating Instructions

All literature is available to download for free, in a range of languages, at http://www.siemens.com/processinstrumentation/documentation

Spare Parts	Article No.
Locknut, for MSP-3, MSP-7, MSP-12, XPP-5	**7MH7723-1CR**
Mounting flange, for MSP-3, MSP-7, MSP-12, XPP-5	**7MH7723-1CS**
Mounting bracket for MSP-9	**7MH7723-1CT**
Lid, 1/2" NPT cable inlet for MSP-3, MSP-7, MSP-12	**7MH7723-1CU**
Lid for MSP-9	**7MH7723-1CV**
Lid gasket, for MSP-3, MSP-9	**7MH7723-1CW**
Lid gasket, for MSP-7, MSP-12	**7MH7723-1CX**
Motion cable gland adaptor kit	**7MH7723-1JU**

1) No Y01 needed in Order code for standard length.
2) Only available with model options B, D, G, H, J.
3) MSP-3 and MSP-9 probes required the use of RMA (amplifier).
4) Available with Model options G, H, and J only.

© Siemens 2020

Dimensional drawings

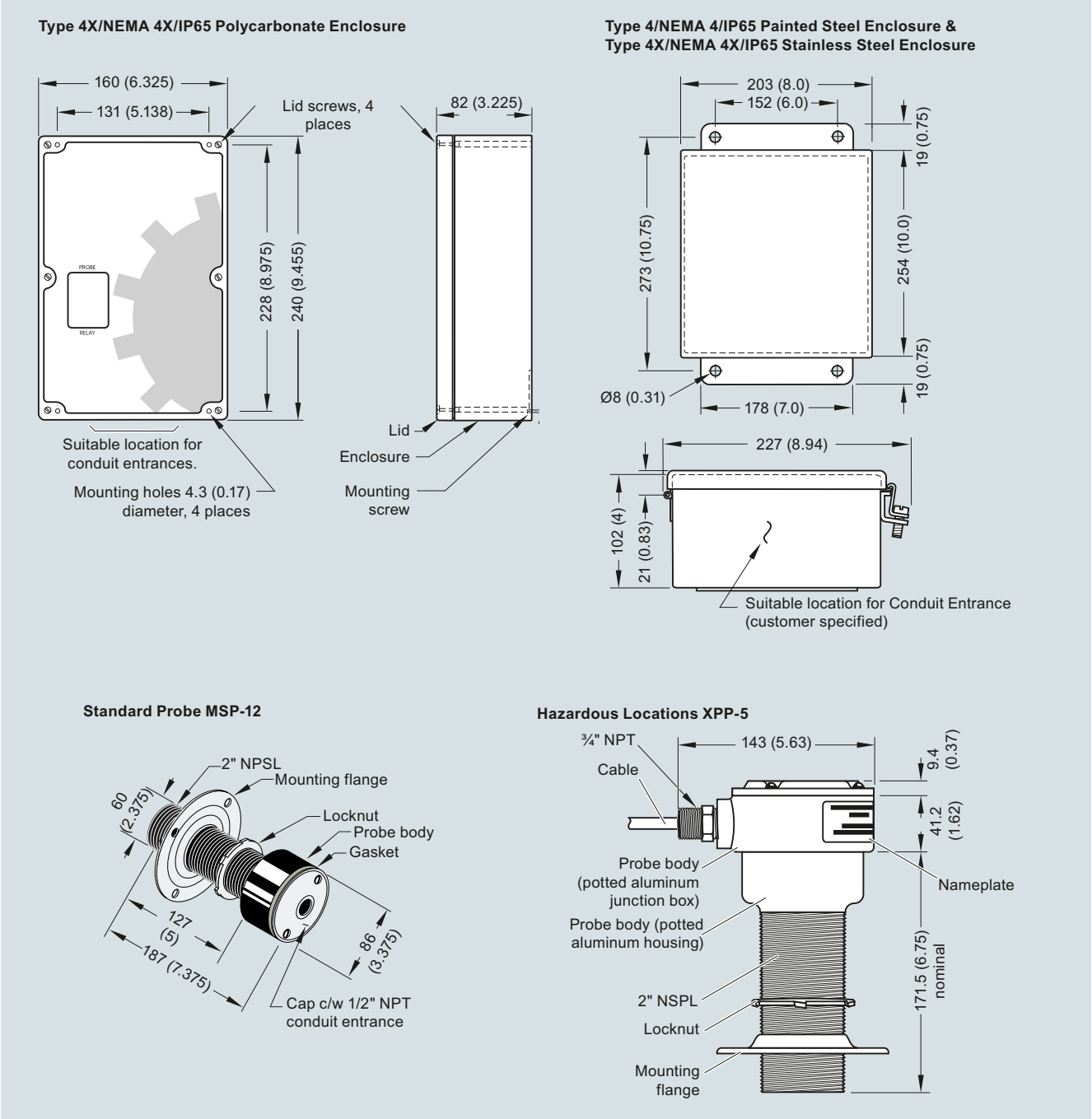

Milltronics MFA 4p and probe, dimensions in mm (inch)

© Siemens 2020

Dimensional drawings (continued)

High temperature probe MSP-3

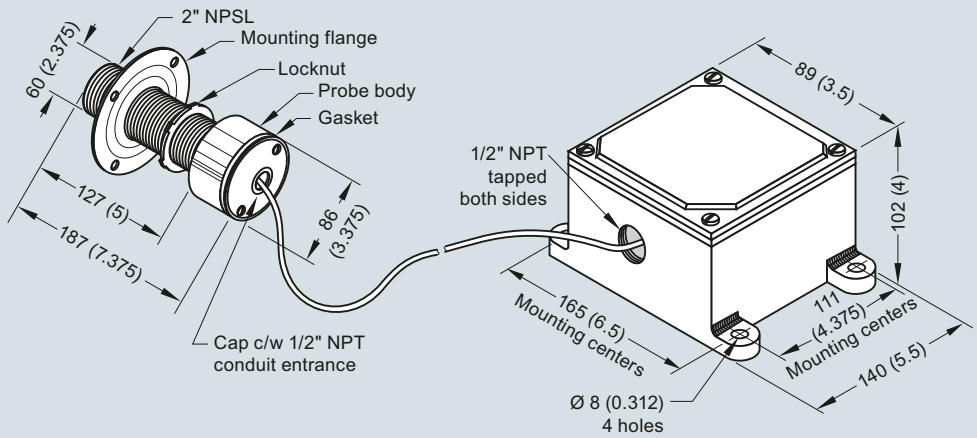

High temperature stainless steel probe MSP-9

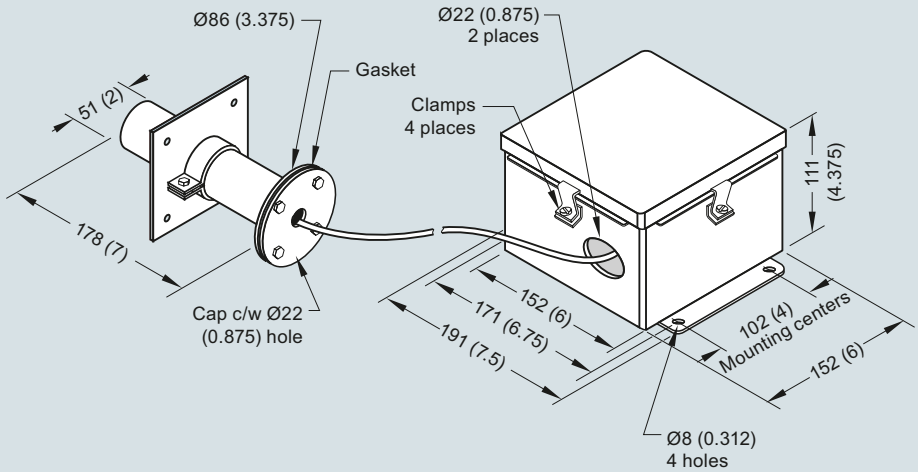

Milltronics probes, dimensions in mm (inch)

© Siemens 2020

Overview

Milltronics MSP-7 is a heavy-duty 3-wire motion sensor that provides an NPN open collector output to PLCs.

Benefits

- Up to 100 mm (4 inch) gap between target and probe
- Corrosion resistant construction
- General purpose, suitable for majority of industrial applications; rugged probe designs provide unmatched reliability

Application

The MSP-7 motion sensing probe can detect changes in the rotation and movement of ferrous equipment. When connected to a PLC it can warn of malfunction and signals to stop or slow down equipment, preventing costly failure or downtime. Its reliability makes it a very cost effective sensor.

The single setpoint system suits most industrial applications. This versatile unit can be used on tail pulley shafts, driven pulleys, motor shaft sensing, belt or drag conveyors, screw conveyor flights, bucket elevators, fans and pumps.

An NPN open collector 3-wire output allows for versatile connection to most PLC models and a large dynamic range ensures that the MSP-7 can detect changes in target speed for a variety of applications.

- Key Applications: tail pulleys, motor shaft sensing, screw conveyor flights, bucket elevators

Design

Mounting for Milltronics MSP-7

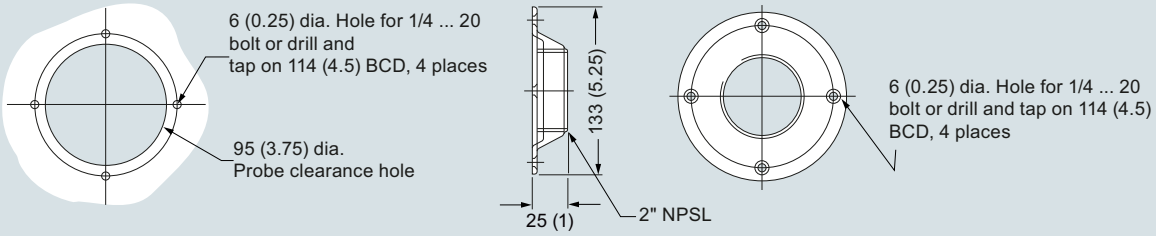

Note: Mounting flange supplied with probe.

Mounting for Milltronics MSP-7, dimensions in mm (inch)

Technical specifications

Mode of operation	
Measuring principle	Magnetic
Typical application	Monitoring loss of motion in tail pulley, screw flights, bucket elevators
Features	• Rugged corrosion resistant aluminum body • Low voltage operation • Large dynamic range • Threaded body for finite adjustment
Output	NPN open collector, 2 kΩ pull up to input voltage, 330 Ω impedance, 40 mA max.
Performance	
Repeatability	± 1 %
Dead band	± 0.25 %
Dynamic Range	0 ... 7 200 PPM
Ambient Temperature Range	-40 ... +60 °C (-40 ... +140 °F)
Storage temperature	-40 ... +60 °C (-40 ... +140 °F)
Design	
Enclosure rating	Type 4X/NEMA 4X/IP67
Power Supply	21 ... 28 V DC, 40 mA max.
Certificates and approvals	CE, RCM, EAC, KCC

© Siemens 2020

Milltronics MSP-7 Motion sensor

Selection and ordering data

	Article No.
Milltronics Motion sensing probes ↗	**7MH7146-**
Heavy duty, 100 mm measuring range, for use with RMA, MFA 4p, WM300 MFA, or other control.	■ ■ ■
↗ Click on the Article No. for the online configuration in the PIA Life Cycle Portal.	
Cable Length	
Standard length (as described in Model options)[1]	**0**
Add Order code Y01 and plain text: "Total cable length ... m"	
Extended cable length 2 ... 30 m (6.6 ... 98.4 ft)	**1**
Model [standard cable length/type]	
MSP-7, ½" NPT cable inlet [1.5 m (5 ft) cable]	**K**
Approvals	
CE, RCM, EAC, KCC	**A**

[1] No Y01 needed in Order code for standard length.

Selection and ordering data

	Order code
Further designs	
Please add "**-Z**" to Article No. and specify Order code(s).	
Total cable length: enter the total cable length in plain text description	**Y01**
Acrylic coated, stainless steel tag [13 x 45 mm (0.5 x 1.75 inch)]: Measuring-point number/identification (max. 16 characters), specify in plain text	**Y17**
Cable gland kit	**A57**
Manufacturer's test certificate: According to EN 10204-2.2	**C11**
Operating Instructions	
All literature is available to download for free, in a range of languages, at http://www.siemens.com/processinstrumentation/documentation	
Spare Parts	Article No.
Locknut, for MSP-3, MSP-7, MSP-12, XPP-5	**7MH7723-1CR**
Mounting flange, for MSP-3, MSP-7, MSP-12, XPP-5	**7MH7723-1CS**
Lid, 1/2" NPT cable inlet for MSP-3, MSP-7, MSP-12	**7MH7723-1CU**
Lid gasket, for MSP-7, MSP-12	**7MH7723-1CX**
Motion cable gland adaptor kit	**7MH7723-1JU**

6

Dimensional drawings

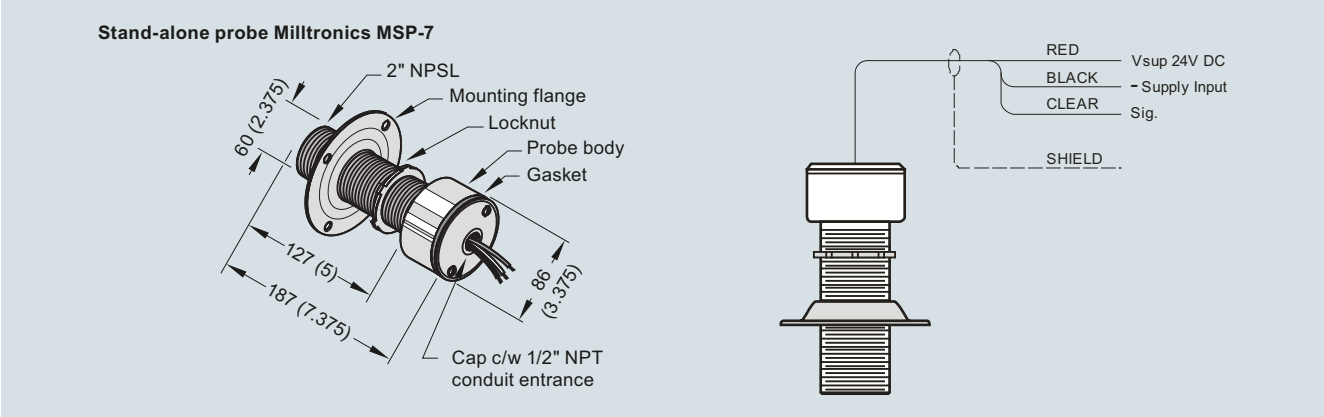

Stand-alone probe Milltronics MSP-7, dimensions in mm (inch)

© Siemens 2020

Overview

SITRANS WM300 MFA motion failure alarm controller is a highly sensitive dual setpoint motion sensor system, used with Milltronics MSP probes.

Benefits

- Up to 100 mm (4 inch) gap between target and probe.
- Over and under speed setpoint detection.
- Setpoint adjustment range 2 to 5 000 Hz (120 to 300 000 ppm).
- Adjustable start-up time delay.
- Visual indication of probe operation and relay status.
- General purpose, suitable for majority of industrial applications; rugged probe designs provide unmatched reliability.

Application

The SITRANS WM300 MFA detects changes in the motion and speed of rotating, reciprocating or conveying equipment. It warns of equipment malfunction and signals through contacts to shut down machinery in case of a slowdown or failure. Its reliability makes it a cost-effective way to protect valuable process equipment.

The dual setpoint system suits most industrial applications. This versatile unit can be used on tail pulley shafts, driven pulleys, motor shaft sensing, belt or drag conveyors, screw conveyor flights, bucket elevators, fans and pumps.

Multiple machines can be monitored with twin, independent probe inputs as well as an additional 2 inputs for differential speed detection (DSD) within a machine monitoring solution such as a belt conveyor comparing the head to tail pulley speeds. An optional analog output module can convert the WM300 into a non-contacting tachometer (NCT) with 2 mA outputs.

A special feature is the adjustable 0 to 60 second time delay, allowing the monitored device to accelerate to normal running speed before monitoring begins. A wide range of probes are available to suit specific needs, including high temperatures and corrosive installations. SITRANS WM300 MFA consistently meets the needs of mining aggregate, cement and other primary and secondary industries.

- Key Applications: tail pulleys, motor shaft sensing, screw conveyor flights, bucket elevators

© Siemens 2020

Design

Mounting for Milltronics MSP-3, MSP-7, MSP-12, XPP-5

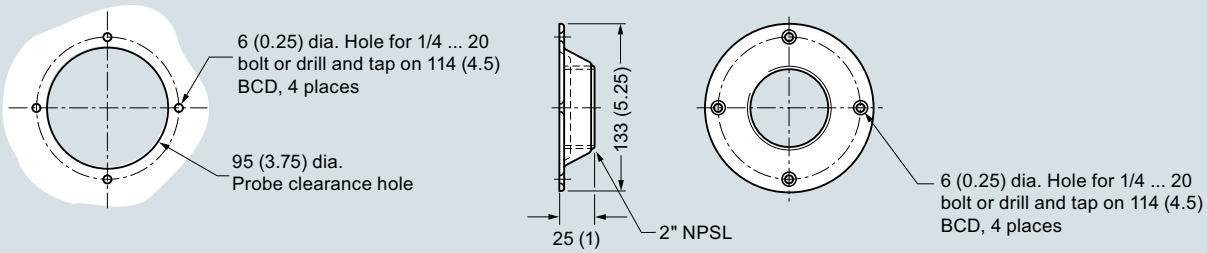

Note: Mounting flange supplied with probe.

Mounting for Milltronics MSP-9

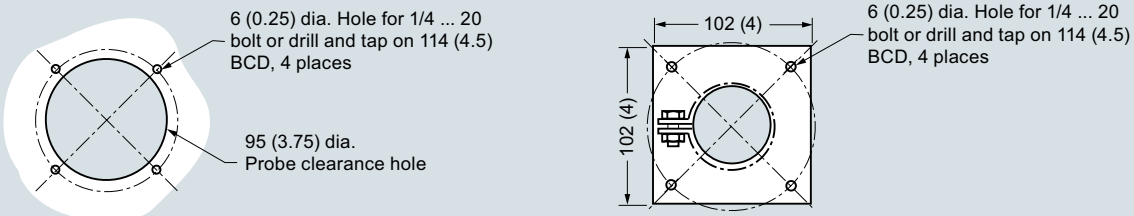

Panel

Probe flange

Milltronics MSP-12, MSP-3, MSP-7, MSP-9, XPP-5 mounting, dimensions in mm (inch)

Standard Milltronics MSP-12
- Heavy-duty general purpose motion probe
- Long lasting aluminum body with internal amplifier
- Convenient mounting flange and locknut for fast installation and setup
- Temperature rating: -40 ... +60 °C (-40 ... +140 °F)
- Enclosure rating: Type/NEMA 4X, 6, IP67

Standard Milltronics MSP-7
- Heavy-duty general purpose motion probe for direct connection to WM300 MFA
- Long lasting aluminum body
- Convenient mounting flange and locknut for fast installation and setup
- Temperature rating: -40 ... +60 °C (-40 ... +140 °F)
- Enclosure rating: Type/NEMA 4X, 6, IP67
- NPN, open collector output
- 24 V DC power supply

Milltronics XPP-5
- CSA hazardous approval (Class I, Div. 1, Groups A, B, C, D; Class II Div. 1, Groups E, F, G; Class III)
- Aluminum body that is fully potted
- Convenient mounting flange and locknut
- 3/4" NPT male hub connection
- Operating temperature from -40 ... 60 °C (-40 ... 140 °F)
- Enclosure rating: Type/NEMA 4X,6, IP67

High temperature Milltronics MSP-3
- Heavy-duty, high temperature aluminum probe designed to withstand operating temperatures from -50 ... 260 °C (500 °F)
- Cast aluminum probe with convenient mounting flange and locknut
- 1.5 m (5 ft) of high temperature PTFE cable provided. Up to 30 m (100 ft) may be used.
- Enclosure rating: Type/NEMA 4X, 6, IP67

Stainless high temperature Milltronics MSP-9
- Heavy-duty, high temperature 304 stainless steel probe
- Special construction allows operation of probe in environment from -50 ... 260 °C (500 °F)
- 1.5 m (5 ft) special high temperature PTFE cable provided. Up to 30 m (100 ft) may be used.
- Enclosure rating: Type/NEMA 4X, 6, IP67

Milltronics RMA (Remote Mounted Amplifier)
- Available for internal mounted IMA in probe, or without and converting older existing applications into 3-wire NPN signals for use with WM300 MFA
- DIN rail mount
- Operating temp. from -40 ... +60 °C (-40 ... +140 °F)

Milltronics motion probes

© Siemens 2020

Technical specifications

Mode of operation	
Measuring principle	Motion monitor and alarm
Typical application	Monitoring loss of motion in tail pulley, screw flights, bucket elevators
Features	• Switch user configurable overspeed and underspeed detection • Adjustable start-up time delay: 0 ... 60 seconds • Visual indication of probe operation and relay status • Setpoint adjustment range: - Standard model: 2 ... 5 000 Hz (120 ... 300 000 ppm) - Slow speed version: 2 ... 400 seconds (30 ... 0.15 ppm) • Adjustable start-up time delay: 0 ... 60 seconds • Visual indication of probe operation and relay status
Output	4 relays
Resistive rating	• 10 A at 24 V DC • 10 A at 240 V AC
Performance	
Repeatability	± 1 %
Dead band	± 0.25 %
MSP and XPP dynamic range	0 ... 7 200 PPM
Ambient temperature range	-20 ... +50 °C (-5 ... +122 °F)
Storage temperature	-20 ... +50 °C (-5 ... +122 °F)
Design	
Enclosure dimensions	71.5 x 90 x 60 mm (2.8 x 3.5 x 2.4 inch)
Enclosure material	Polycarbonate
Power	• 10.8 ... 28.8 V DC, 25 ... 165 mA • Power supply: 100 ... 240 V AC, 50/60 Hz, 0.7 ... 0.35 A per LOGO! power module
Certificates and approvals	CE, CSA/ULC/US, FM, EAC, RCM, KCC

Selection and ordering data

	Article No.
Motion Failure Alarm MFA, DSD, NCT A highly sensitive dual setpoint motion sensor system, used with up to 2 MSP or XPP probes. Capable of hi/lo setpoint as well as differential monitoring with 2 additional probes.	**7MH7701-0AA00-0A**
Remote Mounted Amplifier RMA Remote mounted amplifier for 2 Milltronics MSP-1, MSP-3, MSP-9, MSP-12 and XPP-5 motion sensing probes.	**7MH7702-0B**
Analog output module NCT Additional module required for NCT applications featuring 2, 4 ... 20 mA outputs, used with WM300.	**6ED10551MM000BA2**
Power conversion module Convert 100 ... 240 V AC ... 24 V DC power, for use with WM300	**6EP13311SH03**
Remote display and configuration panel Larger text display panel mount HMI for use with enclosure mounted WM300 for easy user access and monitoring.	**6ED10554MH080BA0**
Operating Instructions All literature is available to download for free, in a range of languages, at http://www.siemens.com/processinstrumentation/documentation	

© Siemens 2020

Dimensional drawings

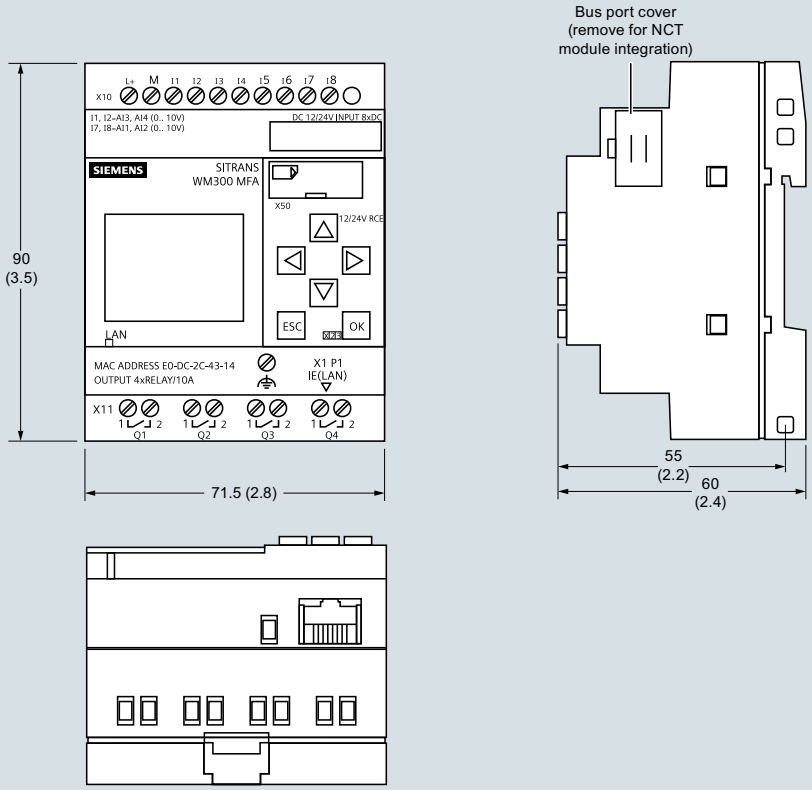

Standard Probe MSP-7, MSP-12

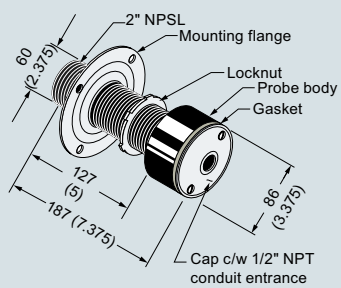

Hazardous Locations XPP-5

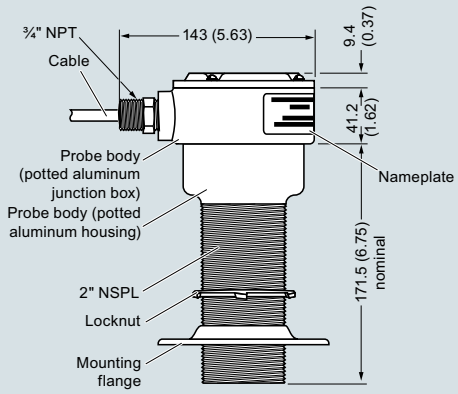

SITRANS WM300 MFA and probe, dimensions in mm (inch)

High temperature probe MSP-3

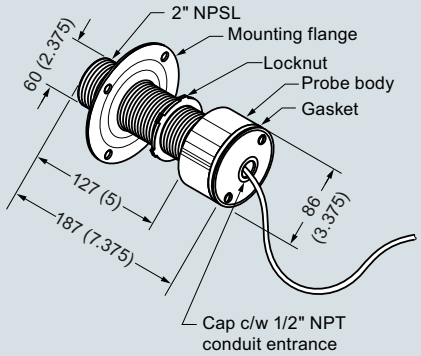

High temperature stainless steel probe MSP-9

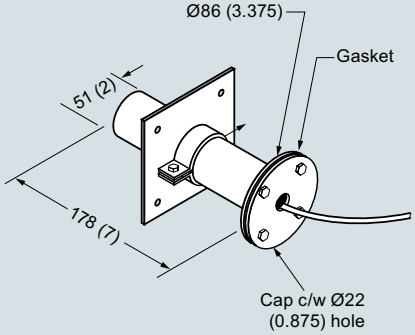

Milltronics probes, dimensions in mm (inch)

© Siemens 2020

Overview

SITRANS WM100 is a heavy-duty zero-speed alarm switch. This non-contacting unit provides cost-effective equipment protection even in the harshest conditions.

Benefits

- Up to 100 mm (4 inch) gap between SITRANS WM100 and targets
- Rugged, low maintenance suitable for tough environments
- 1 SPDT Form C relay contact
- Provides cost-effective protection
- Visual indication of target triggered pulse

Application

This rugged unit is impervious to dust, dirt, build-up and moisture and is ideal for such primary industries as mining, aggregate, and cement. Operating where other systems are prone to failure, the non-contacting design eliminates the need for lubricating, cleaning and part replacement. Downtime and clean-up expenses associated with conveying equipment failure are reduced by the SITRANS WM100. It alarms to minimize spillage, prevent extensive damage or even fire caused by belt slippage at the head pulley, and warns against conveyor malfunction.

The SITRANS WM100 has built-in selectable start delays and 1 Form C relay contact. With an aluminum body, it operates from -40 to +60 °C (-40 to +140 °F).

- Key Applications: tail pulleys, driven pulleys, motor shaft sensing, screw conveyor flights, bucket elevators

Design

Mounting

The WM100 probe should be mounted, using the supplied mounting flange, onto a vibration-free structure. The gap between the probe and the target should be sufficient such that there is no danger of the target damaging the probe. The maximum allowable gap is 100 mm (4 inch) from the face of the target to the face of the probe for 4.5 x 4.5 mm (3/16 x 3/16 inch) keyway. The WM100 is sensitive to lateral disturbances to its magnetic field. If the WM100 is responding to motion from an interfering target, move the WM100 or install a ferrous plate (steel) as a shield between the WM100 and the interfering target. Where possible, the probe should be mounted such that the cable inlet is pointing downward to avoid accumulation of condensation in the casing. Connection of the probe should be made via flexible conduit for easier removal or adjustment of the probe.

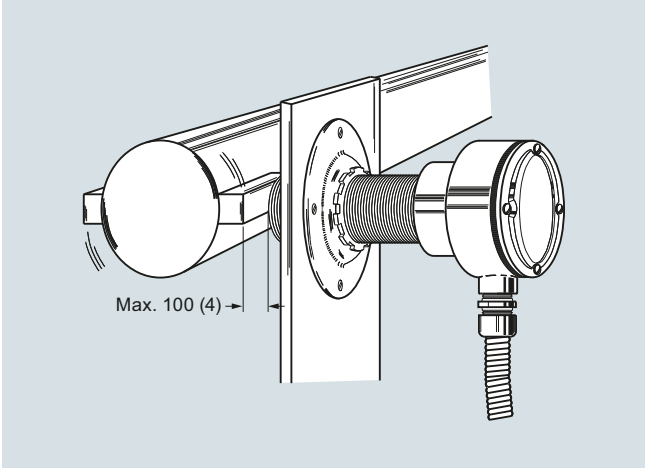

SITRANS WM100 mounting, dimensions in mm (inch)

© Siemens 2020

SITRANS WM100 Motion sensor

Technical specifications

Mode of operation	
Measuring principle	Disruption of magnetic field by ferrous target
Typical application	Monitors absence or presence of motion in harsh conditions
Output	
Contact	1 SPDT Form C dry relay contact, rated 5 A at 250 V AC, fail-safe operation
Time delay	Start up: 10 ... 14 seconds (5 ... 7 seconds with 12 ppm jumper installed)
Zero Speed (selected via a common jumper)	5 seconds ± 1 (minimum speed 10 ... 15 ppm) or 10 seconds ± 2 (minimum speed 5 ... 7.5 ppm)
Rated operating conditions	
Operating temperature	-40 ... +60 °C (-40 ... +140 °F)
Storage temperature	-40 ... +60 °C (-40 ... +140 °F)
Design	
Probe body	Aluminum
Process mounting	2" NPSL
Connection box	Aluminum, ¾" NPT conduit entrance, 5 screw terminals plus grounding terminal for electrical connection, max. 12 AWG (3.30 mm^2) wire size
Gasketing	Neoprene
Display	Red LED for verification of pulses
Enclosure rating	Type NEMA 4x, 6, IP67
Dynamic range	Minimum 6 or 12 pulses per minute Maximum 3 000 pulses per minute
Shipping weight	2 kg (4.4 lb)
Power supply	• 115 V AC/50 ... 60 Hz, 7 VA • 230 V AC/50 ... 60 Hz, 7 VA • ± 10 % of rated voltage
Certificates and approvals	$CSA_{US/C}$, CE, RCM, EAC, KCC

Selection and ordering data

	Article No.
SITRANS WM100 Motion sensor ↗	**7MH7158 -**
Heavy duty speed alarm switch with 100 mm measuring range.	**0 ■ A 0 0**
↗ Click on the Article No. for the online configuration in the PIA Life Cycle Portal.	
Model	
115 V AC	**A**
230 V AC	**B**
Further designs	Order code
Please add "**-Z**" to Article No. and specify Order code(s).	
Manufacturer's Test Certificate: According to EN 10204-2.2	**C11**
Acrylic coated, stainless steel tag [13 x 45 mm (0.5 x 1.75 inch)]: Measuring-point number/i-dentification (max. 16 characters), specify in plain text	**Y17**
Operating Instructions	
All literature is available to download for free, in a range of languages, at http://www.siemens.com/processinstrumentation/documentation	
Accessories	Article No.
Locknut	**7MH7723-1CR**
Mounting flange	**7MH7723-1CS**
Motion cable gland adaptor kit	**7MH7723-1JU**

© Siemens 2020

Dimensional drawings

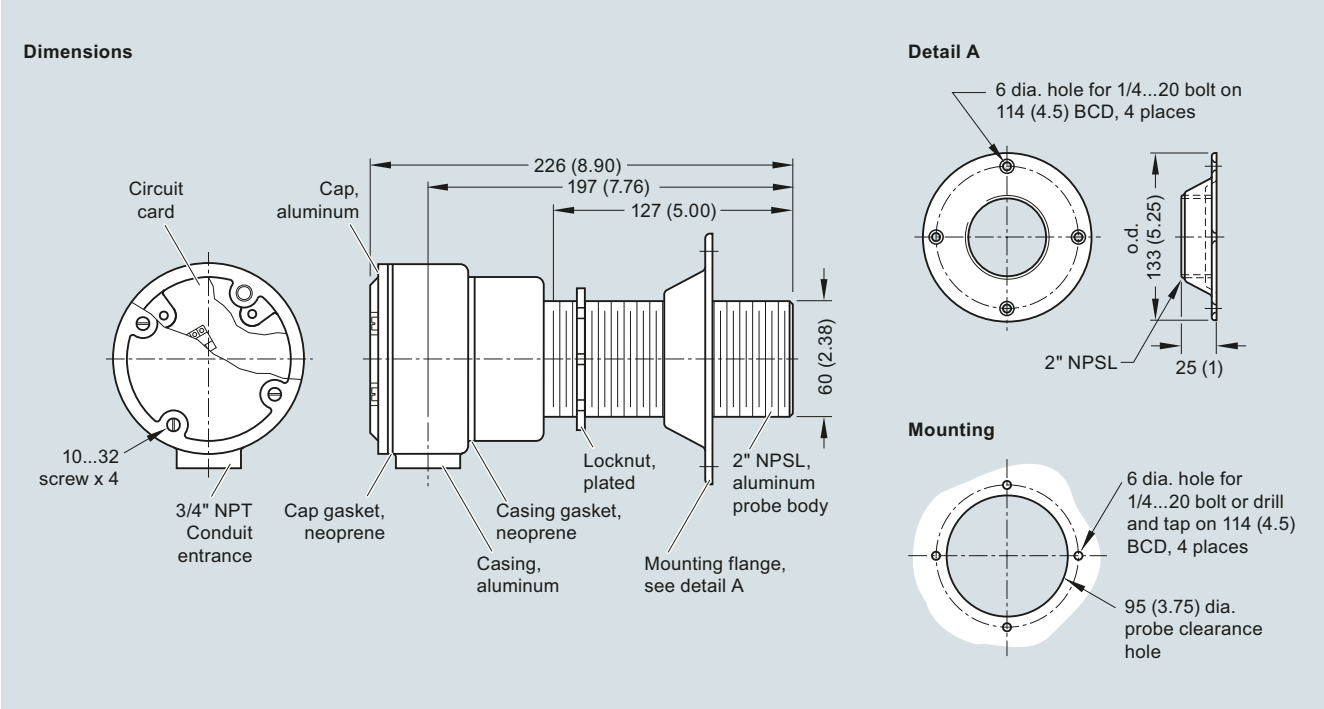

SITRANS WM100 mounting, dimensions in mm (inch)

© Siemens 2020

Circuit diagrams

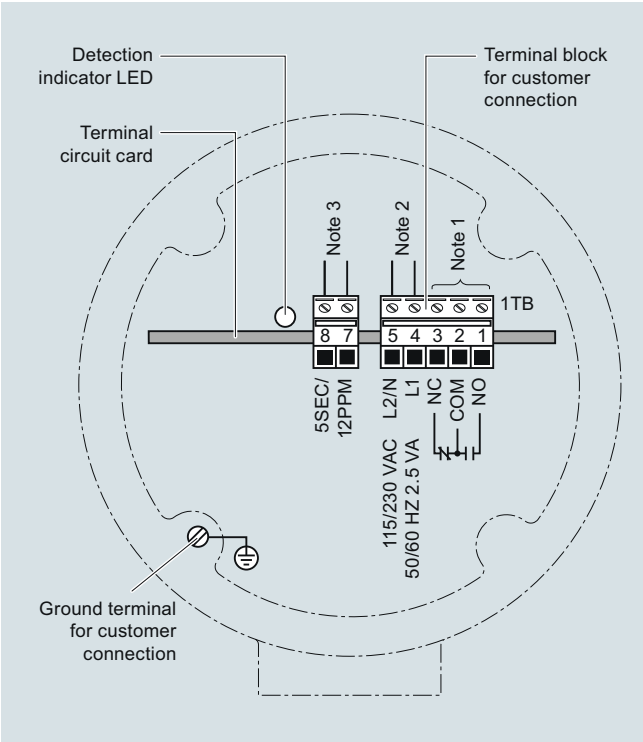

SITRANS WM100 wiring

Notes:

1. Dry contacts shown in de-energized (alarm or shelf) state.
2. SITRANS WM100 is manufactured for either 115 or 230 V AC operation. Check WM100 nameplate for applicable voltage. Correct voltage must be supplied. Voltages lower than specified will result in an inoperative condition. Voltages higher than specified will severely damage unit.
3. For 5 second time delay and a minimum 12 ppm range, connect jumper across terminals 7 and 8. Without a jumper, the default is a 10 second time delay and a minimum 6 ppm range.

© Siemens 2020

Supplementary Components

7/2	**Product overview**
	Supply units and isolation amplifiers
7/5	SITRANS I100
7/8	SITRANS I200
7/11	SITRANS I300
	Displays
7/13	SITRANS RD100
7/15	SITRANS RD150
7/18	SITRANS RD200
7/22	SITRANS RD300
	WirelessHART products
7/26	SITRANS AW200 - WirelessHART adapter
	Remote Terminal Unit
7/32	SIMATIC RTU3000C
	Network transitions
7/45	IE/PB LINK

You can download all instructions, catalogs and certificates for Supplementary Components free of charge at www.siemens.com/processinstrumentation

© Siemens 2020

Overview

	Application	Description	Catalog page	Programming software
Supply units and isolation amplifiers				
	Isolating power supply for supplying transmitters and for connecting intrinsically safe mA sources	**SITRANS I100** HART isolating power supply for rail mounting, with intrinsically safe input.	7/5	-
	Output isolator for controlling valve positioners, i/p converters or indicators in hazardous areas	**SITRANS I200** HART isolating transformer for rail mounting, with intrinsically safe output.	7/8	-
	Isolating power supply for 4-wire devices in hazardous areas	**SITRANS I300** NEW Isolating power supply with intrinsically safe EIA-485 interface for DIN rail mounting, for 4-wire devices.	7/11	-
Displays				
	2-wire loop powered, NEMA 4X enclosed remote digital display for process instrumentation and for hazardous locations	**SITRANS RD100** • Versatile 2-wire loop-powered meter that displays process variables in level, flow, pressure, temperature and weighing applications • FM, CSA, and CE approved device that can be installed in a range of environments, including hazardous areas • Large, easy-to-read display • Easy to install and set up using quick two-step process	7/13	-
	Remote display for 4 to 20 mA and HART devices.	**SITRANS RD150** NEW • Ease of use through 4 button menu driven display • Backlit display • HART communications • Flexible mounting options • Plastic, stainless steel or aluminum housings up to IP68	7/15	
	Universal input, panel mount remote digital display for process instrumentation. Supports RTD, TC, current and voltage inputs, and supporting software allows for remote configuration and data logging.	**SITRANS RD200** • Universal remote digital display for various inputs; ideal for use with most field devices • Standard panel mount display with optional enclosures • Two optional relays for alarm display or process control applications • Special copy function of the measuring instrument reduces setup time, costs and errors • RD software supporting remote configuration, monitoring and logging for up to 100 displays	7/18	-

© Siemens 2020

	Application	Description	Catalog page	Programming software
Displays				
	A panel mount remote digital display for process instrumentation and acts as a multi-purpose, easy to use, rate/totalizer ideal for flow rate, total, and control applications	**SITRANS RD300** • A remote display for level, flow, pressure, weighing, and other process instruments • Acts as a multi-purpose, easy to use, rate/totalizer ideal for flow rate, total, and control applications • Data can be remotely collected, logged and presented on your local computer using the free downloadable RD Software • Accepts a single or dual input of current and voltage and supports math functions such as averaging	7/22	-
WirelessHART devices				
	WirelessHART adapter for wireless communication with 4 ... 20 mA standard or HART field devices	**SITRANS AW200 WirelessHART adapter** • Central access to isolated diagnostics information in HART field devices • Allows predictive instead of preventive maintenance strategies • Enables wireless communication with 4 ... 20 mA or HART field devices • Up to 4 HART field devices can be connected • Powers one connected device	7/26	SIMATIC PDM • Locally with HART modem • Wireless via WirelessHART
Remote Terminal Unit				
	The devices of the RTU3000C family are compact telecontrol stations (RTU: Remote Terminal Unit) for applications with their own power supply. They are particularly suited for monitoring and control of remote stations that are not connected to an energy supply network. The RTUs can independently collect data from connected sensors with time stamps, preprocess the data, and transfer it to a control center. The RTU3000C is supplied with energy by a battery, rechargeable battery or solar panel or a 12 to 24 VDC power supply unit.	**SIMATIC RTU3000C** • Flexible location of use - Energy-optimized operation and flexible power supply concept • Rugged hardware - Reliable operation, even in tough environments with increased temperature range (-40°C to +70°C). • Flexible connection to control centers - Thanks to reloadable telecontrol protocols • Fast and flexible data communication • Simple and cost-effective engineering - Easy configuration with standard web browser without additional engineering tool. • Remote access - On HART or Modbus devices on the Extension Board HART/RS485 via SIMATIC PDM. • Fully automatic time stamp • Automatic temporary storage of process values • Secure data transfer - Use of OpenVPN VPN technology and encrypted email connections • Time-of-day is retained in case of power failure • Saves travel and maintenance costs - Thanks to web-based management	7/32	-

© Siemens 2020

	Application	Description	Catalog page	Programming software
Network transitions				
	IE/PB LINKs are gateways for connecting the two network types, Industrial Ethernet and PROFIBUS, i.e. they enable access to all PROFIBUS nodes connected to the lower-level PROFIBUS network. **Product versions** 2 versions offered as gateways for Industrial Ethernet and PROFIBUS: • ***IE/PB LINK PN IO*** Gateway with PROFINET IO functionality, S7 routing and data record routing for standard ambient conditions • ***IE/PB LINK HA*** Gateway optimized for use in the process industry due to the possibility of deployment in harsh ambient conditions and the connection of PROFIBUS field devices to a redundant AS as PROFINET IO controller	**IE/PB LINK** Both product versions can be used in 2 operating modes: Standard mode enables, for example, loading of programs and configuration data via PG/OP communication, data record routing for configuration and diagnostics of field devices with the SIMATIC PDM tool, S7 routing e.g. for cross-network loading of SIMATIC PLCs on PROFIBUS. When operated as a PROFINET IO proxy, from the perspective of the PN IO controller, all PROFIBUS DP slaves connected after the IE/PB LINK are treated as PN IO devices according to the PROFINET standard, i.e. the IE/PB LINK is the proxy of the connected PROFIBUS DP slaves. Both IE/PB LINK versions offer the possibility to use different transmission media by employing BusAdapters.	7/45	-

Supplied product documentation on DVD and safety notes

The scope of delivery of the Siemens products for process instrumentation includes a multilingual instruction sheet with **safety notes** as well as a uniform **mini DVD – Process Instrumentation and Weighing Systems**.

This DVD contains the most important manuals and certificates for the Siemens process instrumentation and weighing technology portfolio. The delivery may also contain product-specific or order-specific printed materials.

For additional information, refer to the Annex on page 10/3.

© Siemens 2020

Overview

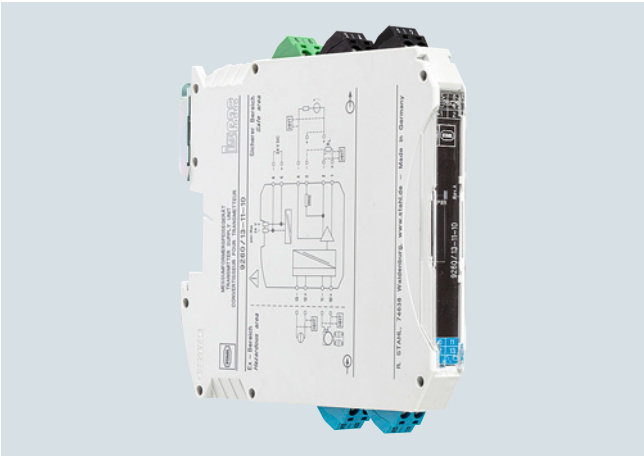

Analog input 0/4 to 20 mA

The isolating power supplies are used for the intrinsically safe operation of transmitters or for connecting to intrinsically safe mA sources.

The transmitters are supplied with auxiliary power from the isolating power supplies.

HART communication signals are transmitted bidirectionally by the isolating power supplies.

Benefits

- Active and passive output 0/4 to 20 mA
- Universally applicable for transmitters and mA sources (4-wire transmitters)
- Narrow design – 12.5 mm wide – for single and two-channel models
- Intrinsically safe input [Ex ia] IIC
- Galvanic isolation between input, output and auxiliary power
- Installation possible in Zones 2, 22 and Div. 2
- Can be used up to SIL 2 (IEC 61508)

	Zones					
	0	1	2	20	21	22
Ex i interfaces	X	X	X	X	X	X
Installation in			X			X

Design

The HART isolating power supply is comprised of a compact plastic enclosure (IP30) and is equipped with push-in screw terminals.

On the front are a green LED for indicating the power supply status and a red LED for signaling errors.

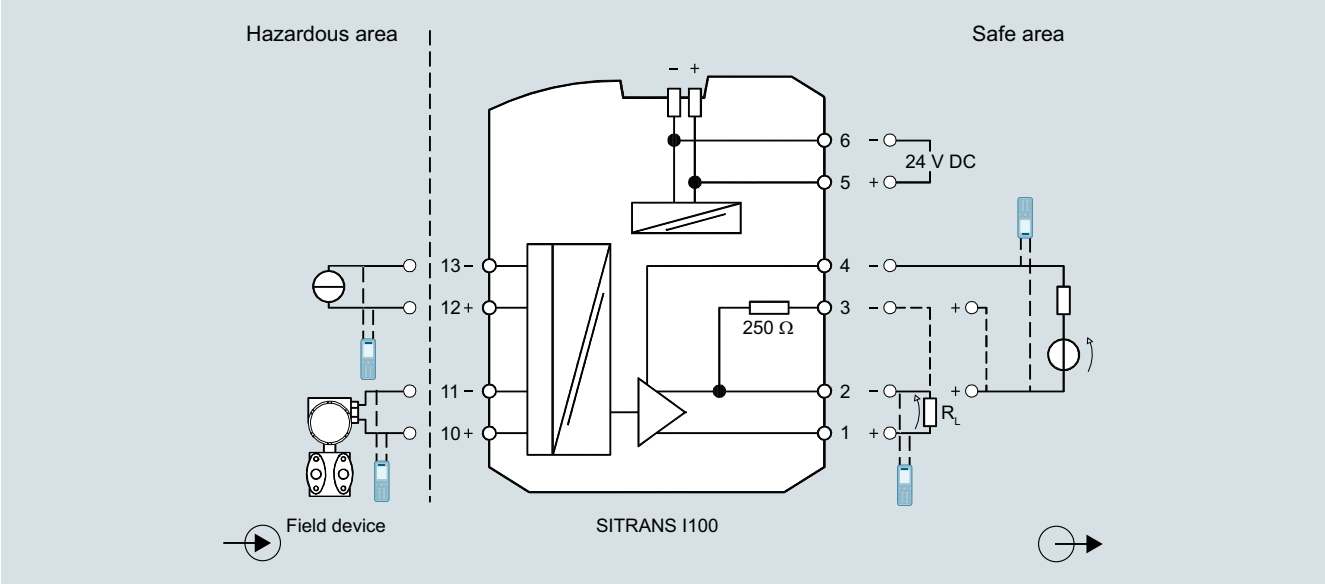

SITRANS I100 isolating power supply HART, function block diagram

© Siemens 2020

Technical specifications

General	
Number of channels	1
Transmitter infeed operation	Yes
Isolation amplifier operation	Yes
Input	0/4 ... 20 mA
Output	0/4 ... 20 mA with HART
Output adjustment time	< 0.2 ms
Output A	0/4 ... 20 mA active (source)
Output B	0/4 ... 20 mA active (sink)
Ex i input	
Input signal	0/4 ... 20 mA with HART
Input functional range	0 ... 24 mA
Communication signal	HART
Transmitter supply voltage	≥ 16 V at 20 mA
Voltage drop	< 3.5 V
Short-circuit current	≥ 22.5 mA
Output	
Output signal	0/4 ... 20 mA with HART (active/passive)
Output functional range	0 ... 24 mA
Communication signal	HART
Output characteristics	= Input signal
Output current at $I_E = 0$	$I_A = 0$ mA
Max. load resistance R_L	1 000 Ω
Residual ripple	≤ 20 mV_{eff}
Settling time (10 ... 90%)	< 200 µs (isolating transformers: < 600 µs)
Galvanic isolation	
• Test voltage according to EN 60079-11	
- Ex i-input to output	375 V peak value
- Ex i-input to auxiliary power	375 V peak value
• Test voltage according to EN 61010/EN 50178	
- Output to auxiliary power	300 V_{eff}
- Output to output	300 V_{eff}
Measuring accuracy	
Error limits temperature influence	≤ 0.1%/10 K
Deviation	≤0.1 %
Deviation typical	0.05%
Rated conditions	
Degree of protection	
• Enclosure	IP30
• Terminals	IP20
Ambient temperature	-20 ... +60 °C (-4 ... +140 °F)
Storage temperature	-40 … +80 °C (-40 … +176 °F)
Relative humidity	≤ 95%, (no condensation)
Usage in height	< 2 000 m (6 562 ft)
Electromagnetic compatibility	Tested acc. to the following standards and regulations: • EN 61326-1 Use in the industrial environment • Interference immunity in accordance with EN 61000-6-2 • Noise radiation according to EN 61000-6-4

Construction	
Weight	185 g (0.41 lb)
Enclosure material	Polyamide
Grid dimension	12.5 mm (0.49 inch)
Fire resistance (UL-94)	V0
Mounting type	DIN rail NS35/15; NS35/7.5
Mounting position	Vertical or horizontal
Type of connection	Screw terminals
• One-wire cross section	
- Rigid	0.2 ... 2.5 mm^2 (0.00031 ... 0.0039 $inch^2$)
- Flexible	0.2 ... 2.5 mm^2 (0.00031 ... 0.0039 $inch^2$)
Auxiliary power	
Rated voltage U_N	24 V DC
Voltage range	19.2 ... 30 V
Residual ripple within voltage range	≤ 3.6 V_{SS}
Rated current	76 mA
Power consumption	1.8 W
Max. power loss:	1.2 W
Operation indicator	Green "PWR" LED
Reverse polarity protection	Yes
Safety specifications	
• Max. voltage U_o	25.2 V
• Max. current I_o	93 mA
• Max. power P_o	587 mW
• Max. permissible external capacitance C_o for IIC/IIB	107 nF/820 nF
• Max. permissible external inductance L_o for IIC/IIB	2 mH/4 mH
• Internal capacitance C_i and inductance L_i	Negligible
• Max. safety-technical voltage	AC 253 V
• SIL	2
• Isolation amplifier, input:	
- Max. output voltage U_o	-[1]
- Max. connectable voltage U_i	30 V
- Max. connectable current I_i	150 mA
- Internal capacitance Ci and inductance L_i of the isolation amplifier	Negligible
Certificates and approvals	
ATEX/IECEx explosion protection	
Certificates	BVS 17 ATEX E 087 X IECEx BVS 17.0079X
Gas/dust explosion protection, fire-damp protection for Zones 2 and 22	
• ATEX	II 3 (1) G Ex nA [ia Ga] IIC T4 Gc II (1) D [Ex ia Da] IIIC I (M1) [Ex ia Ma] I
• IECEx	Ex nA [ia Ga] IIC T4 Gc [Ex ia Da] IIIC [Ex ia Ma] I
Installation	In Zones 2 and 22, Div. 2 and in safe areas
Other approvals	USA/Canada (UL): NEC certification (Class I, II, III) 1, 2 Marine approval (planned) EAC TR approval (planned) Metrological certificate (planned)

[1] U_o does not have to be taken into account in 4-wire operation.

© Siemens 2020

Selection and ordering data

	Article No.
SITRANS I100 isolating power supply • For rail mounting • Narrow design – 12.5 mm wide • Single-channel version with intrinsically safe 0/4... 20 mA output • For supplying 2-wire transducers and mA sources (4-wire transducer) with an intrinsically safe input • Can be used up to SIL2 (IEC/EN 61508)	**7NG4124-1AA00**

Dimensional drawings

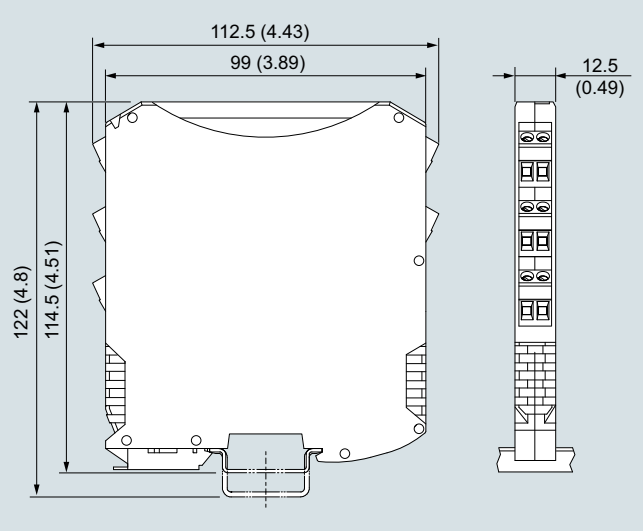

SITRANS I100 isolating power supply HART, dimensions in mm (inch)

Circuit diagrams

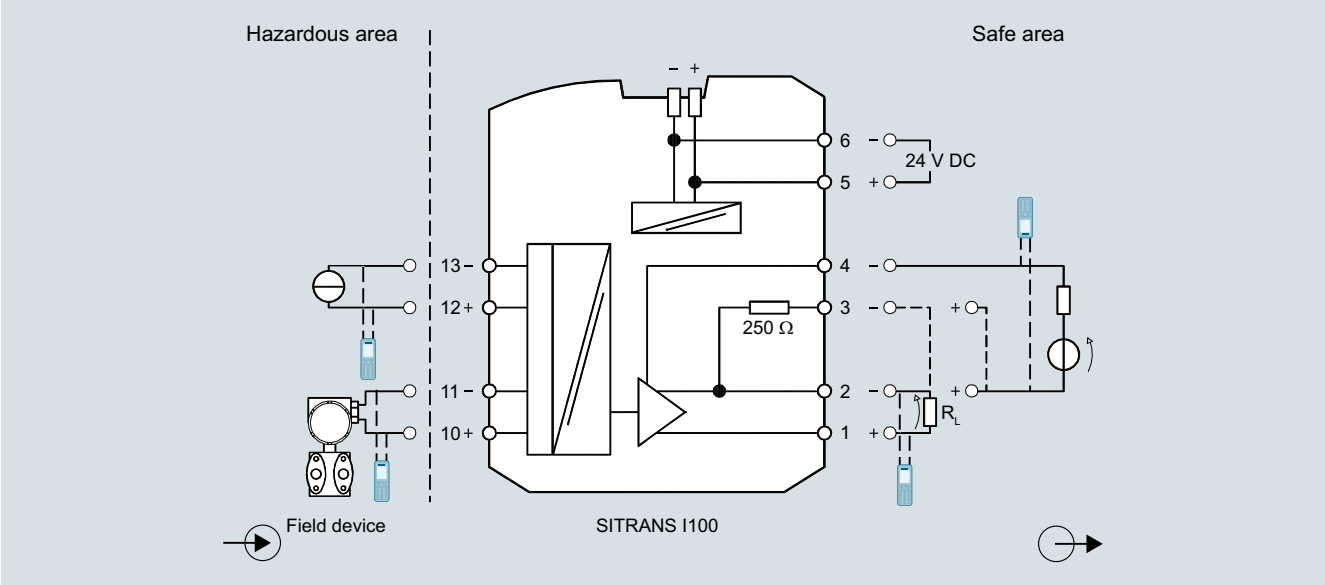

SITRANS I100 isolating power supply HART, connection diagram

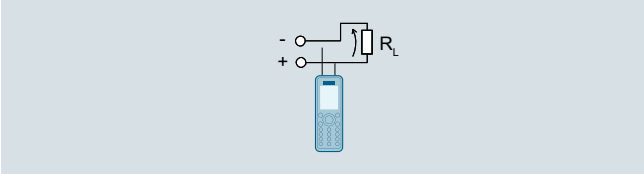

SITRANS I100 isolating power supply HART, output configuration

© Siemens 2020

Overview

Analog output 0/4 to 20 mA for HART

The output isolators are used for intrinsically safe operation of valve positioners, i/p converters or indicators.

Operation of intrinsically safe HART valve positioners (e.g. SIPART PS2) is also possible. The units transfer a superimposed HART communication signal bidirectionally.

Benefits

- For HART output signals 0/4 to 20 mA
- Intrinsically safe output [Ex ia] IIC
- Electrical isolation between input, output and auxiliary power
- Open-circuit and short-circuit monitoring and messaging (can be switched off)
- Installation permissible in Zone 2 and Div. 2
- Can be used up to SIL 2 (IEC 61508)

	Zones					
	0	1	2	20	21	22
Ex intrinsically safe interface	X	X	X	X	X	X
Installation in			X			X

Design

The isolating transformer HART consists of a compact plastic enclosure (IP30) and is equipped with push-in screw terminals.

On the front are a green LED for indicating the power supply status and a red LED for signaling errors.

The auxiliary power supply can be connected individually using push-in screw terminals or jointly for up to 40 units using pac-Bus.

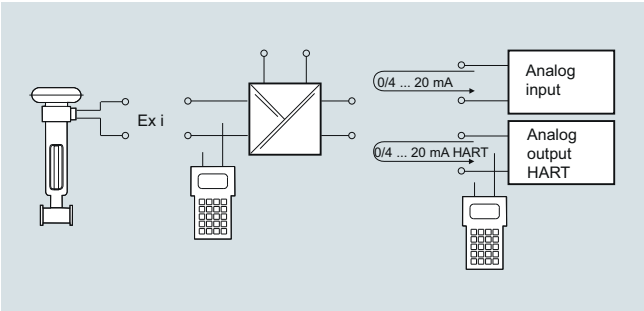

SITRANS I200 output isolator, function block diagram

Technical specifications

Input	
Input signal	0/4 ... 20 mA with HART
Functional range	0 ... 24 mA
Max. input current	50 mA
Input resistance (changeable switch LI)	225 Ω/550 Ω
Communication signal	Bidirectional HART transmission, 0.5 kHz ... 30 kHz
Ex i output	
Output signal	0/4 ... 20 mA with HART
Connectable load resistance	0 ... 800 Ω
Min. load resistance for short-circuit monitoring	150 Ω
Residual ripple	≤ 50 mV
No-load voltage	≤ 25.6 V
Settling time (10% ... 90%)	≤ 100 µs
Transmission characteristics Input/output	1:1 0 ... 20 mA → 0 ... 20 mA, 4 ... 20 mA → 4 ... 20 mA
Measuring accuracy Accuracy, typical data expressed as % of calibrated span at U_N, 23 °C	
Linearity error	≤ 0.1%
Offset error	≤ 0.1%
Temperature influence	≤ 0.1%/10 K
Power supply effect within voltage range	≤ 0.01%
Load resistance effect	≤ 0.02%
Rated conditions	
Degree of protection of enclosure	IP30
Degree of protection of terminals	IP20
Ambient conditions	
• Ambient temperature	-20 °C ... +70 °C (-4 ... +158 °F) (refer to operating instructions)
• Storage temperature	-40 °C ... +80 °C (-40 ... +176 °F)
• Relative humidity (no condensation)	≤ 95%
Electromagnetic compatibility	Checked according to following standards and regulations: EN 61326-1 Use in the industrial environment
Design	
Screw terminals	
• One-wire connection	
- Rigid	0.2 ... 2.5 mm^2 (0.00031 ... 0.0039 in^2)
- Flexible	0.2 ... 2.5 mm^2 (0.00031 ... 0.0039 in^2)
- Flexible with end ferrules (without/with plastic ferrule)	0.25 ... 2.5 mm^2 (0.00039 ... 0.0039 in^2)
• Two-wire connection	
- Rigid	0.2 ... 1 mm^2 (0.00031 ... 0.00155 in^2)
- Flexible	0.2 ... 1.5 mm^2 (0.00031 ... 0.0023 in^2)
- Flexible with end ferrules	0.25 ... 1 mm^2 (0.00039 ... 0.00155 in^2)
Weight	Approx. 160 g (0.35 lb)
Type of installation	On DIN rail according to EN 50022 (NS35/15; NS35/7.5)
Mounting position	Vertical or horizontal
Enclosure material	PA 6.6
Fire protecting class (UL-94)	V0

© Siemens 2020

Auxiliary power	
Rated voltage U_N	24 V DC
Voltage range	18 ... 31.2 V
Residual ripple within voltage range	≤ 3.6 V_{SS}
Rated current (U_N, 20 mA)	80 mA
Power consumption (U_N, 20 mA)	1.3 W
Power loss (at U_N, R_L = 500 Ω)	1.1 W
Operation indicator	Green "PWR" LED
Reverse polarity protection	Yes
Undervoltage monitoring	Yes (no faulty module/output states)
Electrical isolation	
• Test voltage according to EN 60079-11	
- Ex i output to input	1.5 kV AC
- Ex i output to auxiliary power	1.5 kV AC
- Error contact to Ex i output	1.5 kV AC
• Test voltage according to EN 50178	
- Input to auxiliary power	350 V AC
- Error contact to auxiliary power and output	350 V AC
Fault detection Ex i output	
• Open circuit	> 10 kΩ
• Short-circuit	< 15 Ω
• Input characteristics	> 6 kΩ
• Open-circuit detection only for input current	≥ 3.6 mA
• Settings (LF switch)	Activated/deactivated
• Error indication	Red "LF" LED
• Signaling of cable fault and auxiliary power failure	• Contact (30 V/100 mA), closed to ground in event of fault • pac-Bus, floating contact (30 V/100 mA)
Certificates and approvals	
Explosion protection ATEX	
• EC type-examination certificate	DMT 03 ATEX E 012 X
• Degree of protection	II 3 (1) G Ex nA nC [ia] IIC T4 II (1) D [Ex iaD]
Installation	In Zone 2, Div. 2 and in the safe area
Other approvals	USA (FM) Canada (CSA) Marine (DNV)
Safety specifications (CENELEC)	
• Max. voltage U_o	25.6 V
• Max. current I_o	96 mA
• Max. power P_o	605 mW
• Max. connectable capacitance C_o for IIC/IIB	103 nF/800 nF
• Max. connectable inductance L_o for IIC/IIB	1.9 mH/11 mH
• Internal capacitance C_i and inductance L_i	Negligible
• Insulation voltage U_m	253 V
• Additional information and value combinations	See Certifications

Selection and ordering data

	Article No.
SITRANS I200 output isolator HART For rail mounting, input 0/4 ... 20 mA, output 0/4 ... 20 mA, intrinsically safe	**7NG4131-0AA00**
Accessories	
pac-Bus basic set With 5 elements and 1 terminal set (beginning and end)	**7NG4998-1AA**
pac-Bus expansion set With 5 elements	**7NG4998-1AB**

Accessories

SITRANS I pac-Bus is an accessory for the isolating power supply. It consists of the SITRANS I pac-Bus single elements (1 x per device) and the SITRANS I pac-Bus terminal set (1 x per pac-Bus):

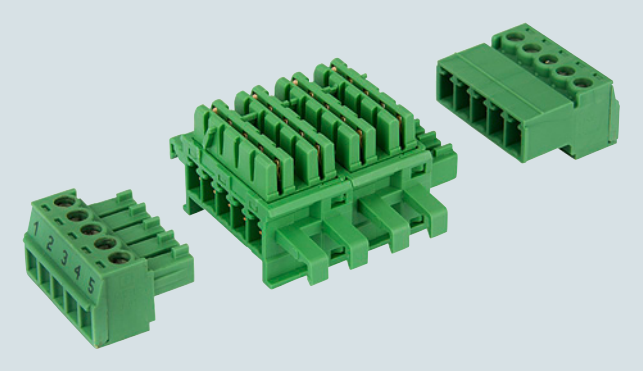

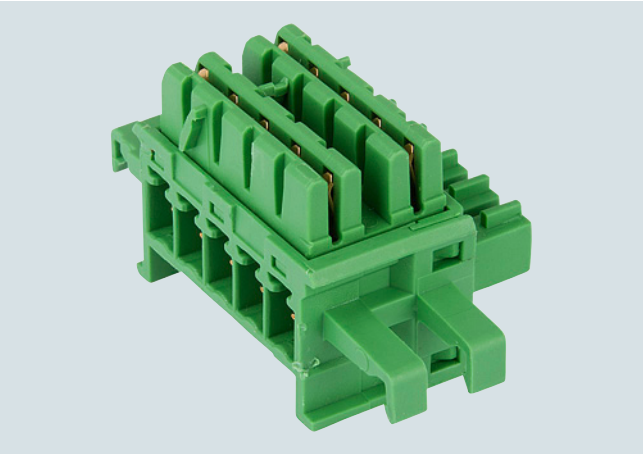

© Siemens 2020

Dimensional drawings

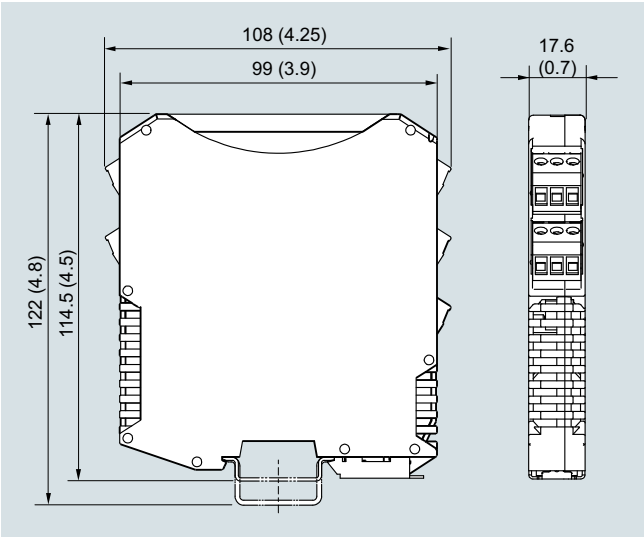

SITRANS I200 output isolator HART, dimensions in mm (inch)

Circuit diagrams

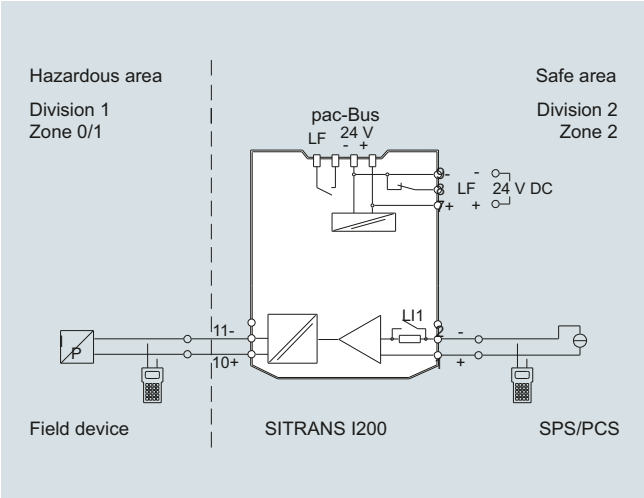

SITRANS I200 output isolator HART, connection diagram

© Siemens 2020

Overview

EIA-485 interface for Modbus RTU, PROFIBUS RS 485-IS and BACnet MS/TP communication.

- The isolating power supplies are used for the intrinsically safe operation of 4-wire devices.
- The isolating power supply supplies the 4-wire devices with power.

Benefits

- Suitable for 4-wire devices
- Galvanic isolation between EIA-485 and EIA-485-IS, between the power supply and EIA-485-IS, and between the power supply on the input side and the intrinsically safe power supply on the output side.
- Intrinsically safe power supply and communication [Ex ia] IIC
- Installation permissible in Zone 2 and Div. 2
- Diagnostics via LEDs
- Integrated, connectable bus termination on the non-hazardous side and the hazardous side
- Transmission rates of 1 200 bps to 1.5 Mbps

Application

Isolating power supply for 4-wire devices in hazardous areas

Design

The EIA-485 transmitter isolating power supply consists of a compact plastic enclosure (IP20) in the SIMATIC S7-1200 design, and is equipped with plug-in screw terminals. On the front are a green LED for indicating the auxiliary power supply status and a yellow LED for signaling communication. The push-in screw terminals are jumpered on the EIA-485 transmitter isolating power supply, allowing the power supply and primary-side communication to further SITRANS I300 devices to be looped through.

Technical specifications

Power supply	
Input	
• Rated voltage U_N	24 V DC
• Voltage range	19.2 ... 28.8 V
• Residual ripple within voltage range	≤ 3.6 V_{SS}
• SITRANS I300 current consumption (24 V DC)	≤ 210 mA
• Power loss for a load of 1.5 W	3.3 W at 24 V DC
• Reverse polarity protection	Yes
Output	
• Rated voltage	15.6 V
• Max. current	459 mA
• Max. power	1.5 W
Galvanic isolation	Test voltage according to EN 60079-11
• EIA-485 to EIA-485-IS	1 500 V AC
• Power supply to EIA-485-IS	1 500 V AC
Rated conditions	
Degree of protection of enclosure	IP20
Degree of protection of terminals	IP20
Ambient conditions	
• Ambient temperature	-40 … +60 °C (-40 … +140 °F)
• Storage temperature	-40 … +70 °C (-40 … +158 °F)
• Relative humidity (no condensation)	≤ 95%
Electromagnetic compatibility	Tested acc. to the following standards and regulations: EN 61326-1 Use in the industrial environment
Construction	
Dimensions in mm (width x height x depth)	70 x 100 x 75
Weight	Approx. 250 g (0.55 lbs)
Screw terminals	
• One-wire connection	
- Rigid	0.34 … 2.5 mm² (AWG 22 ... 14)
- Flexible	0.34 … 2.5 mm² (AWG 22 ... 14)
- Flexible with end ferrules	0.34 … 2.5 mm² (AWG 22 ... 14)
Mounting type	• On DIN rail acc. to EN 50022 (NS35/15; NS35/7.5) • Wall
Mounting position	Vertical or horizontal
Communication	
EIA-485 segment (primary side)	
• Supported transmission rates	• 1 200 bps • 2 400 bps • 4 800 bps • 9 600 bps • 19.2 kbps (factory setting) • 38.4 kbps • 45.45 kbps • 57.6 kbps • 76.8 kbps • 93.75 kbps • 115.2 kbps • 187.5 kbps • 460.8 kbps • 500 kbps • 1.5 Mbps
• Terminating resistor	Integrated, connectable
EIA-485-IS segment (secondary side)	
• Permissible cable lengths	
- 1 200 … 187 500 bps	≤ 1 000 m
- 500 kbps	≤ 400 m
- 1.5 Mbps	≤ 200 m
• Terminating resistor	Integrated, connectable
Diagnostic functions	
• Monitoring, 24 V power supply	Green "PWR" LED
• Bus monitoring	Yellow "RX/TX" LED

© Siemens 2020

SITRANS I300

Certificates and approvals	
ATEX explosion protection	
• EC type test certificate	ATEX LVD EMC RoHs
• Degree of protection	CAT 3[1] G
Installation	In Zone 2, Div. 2 and in safe areas
Safety data (acc. to IEC 60079-11)	
• Max. voltage U_0	17.42 V
• Max. current I_0	459 mA
• Max. power P_0	2 000 mW
• Max. connectable capacitance C_0 for IIC/IIB	327 nF/1 958 nF
• Max. connectable inductance L_0 for IIC/IIB	134 µH/675 µH
• Internal capacitance C_i	Negligible
• Internal inductance L_i	Negligible
• Maximum insulation voltage U_m	See certificate
Explosion protection acc. to EAC Ex	Available soon
Marine approvals	• DNV-GL (Det Norske Veritas/Germanischer Lloyd) • LR (Lloyds Register) • BV (Bureau Veritas) • ABS (American Bureau of Shipping) • RINA (Registro Italiano Navale)

Selection and ordering data

SITRANS I300 isolating power supply	
Isolating power supply with intrinsically safe EIA-485 interface, rail mounting, for 4-wire devices.	**A5E39832532**

Circuit diagrams

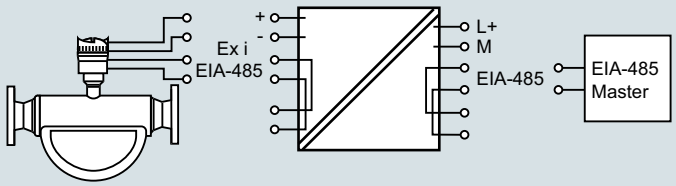

SITRANS I300 isolating power supply, connection diagram

© Siemens 2020

Overview

The SITRANS RD100 is a 2-wire loop powered, NEMA 4X enclosed remote digital display for process instrumentation.

Benefits

- Easy setup
- Approved for hazardous locations
- NEMA 4X, IP67 impact-resistant enclosure
- Simple two-step calibration
- Two modes of input allow for easy servicing, with no interruption of loop required

Application

The RD100 is very versatile. It can be installed indoors or outdoors, in hot or cold environments, and in safe or hazardous areas.
It has been approved by FM and CSA as Intrinsically Safe and non-incendive, and operates from -40 to +85 °C (-40 to +185 °F), adding only 1 V to the loop.

Calibration consists of a quick two-step process involving the adjustment of only two non-interacting potentiometers.

- Key Applications: remotely displays process variables in level, flow, pressure, temperature, and weighing applications, in a 4 to 20 mA loop.

Technical specifications

Mode of operation	
Measuring principle	Analog to digital conversion
Measuring range	4 … 20 mA
Measuring points	1 instrument only
Accuracy	± 0.1 % of span ± 1 count
Rated operating conditions	
Ambient conditions	
• Operating temperature range	-40 … +85 °C (-40 … +185 °F)
• Storage temperature	-40 ... +85 °C (-40 ... +185 °F)
Design	
Weight	340 g (12 oz)
Material (enclosure)	Impact-resistant glass filled polycarbonate body and clear polycarbonate cover
Degree of protection	NEMA 4X, IP67
Power supply	
External loop power supply	30 V DC max.
Display	• 1.0 inch (2.54 cm) high LCD • Numeric range from -1 000 … +1 999
Certificates and approvals	
Non-hazardous	CE
Hazardous	
• Intrinsically Safe	• CSA/FM Class I, II, III, Div. 1, Groups A, B, C, D, E, F, G T4 • CSA/FM Class I, Zone 0, Group IIC
• Non-incendive	• CSA/FM Class I, Div. 2, Groups A, B, C, D • CSA/FM Class II and III, Div. 2, Groups F and G
Options	
Mounting	• 2 inch (5.08 cm) pipe mounting kit (zinc plated or stainless steel) • Panel mounting kit

Selection and ordering data

	Article No.
SITRANS RD100 Display ↗ Remote digital display for process instruments. 2-wire, loop powered, NEMA 4X enclosure. ↗ Click on the Article No. for the online configuration in the PIA Life Cycle Portal.	**7ML5741-** ■■ **A 0 0 - 0**
Conduit hole location (½ inch)	
None	**1**
Bottom	**2**
Rear	**3**
Top	**4**
Approvals	
FM/CSA	**A**
CE	**B**

Selection and Ordering data	Article No.
Operating Instructions	
All literature is available to download for free, in a range of languages, at http://www.siemens.com/processinstrumentation/documentation	
Accessories	
Panel mount kit	**7ML1930-1BN**
2 inch (5.08 cm) pipe mounting kit (zinc plated seal)	**7ML1930-1BP**
2 inch (5.08 cm) pipe mounting kit (stainless steel, Type 304, EN 1.4301)	**7ML1930-1BQ**

© Siemens 2020

Dimensional drawings

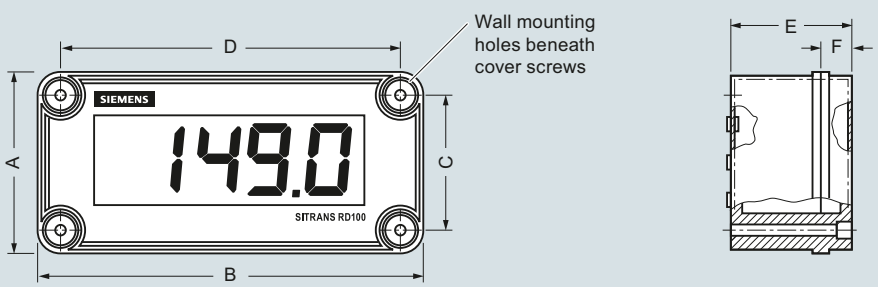

A: 80 (3.15) C: 60 (2.36) E: 65 (2.56)
B: 140 (5.51) D: 120 (4.72) F: 20 (0.79)

SITRANS RD100, dimensions in mm (inch)

Circuit diagrams

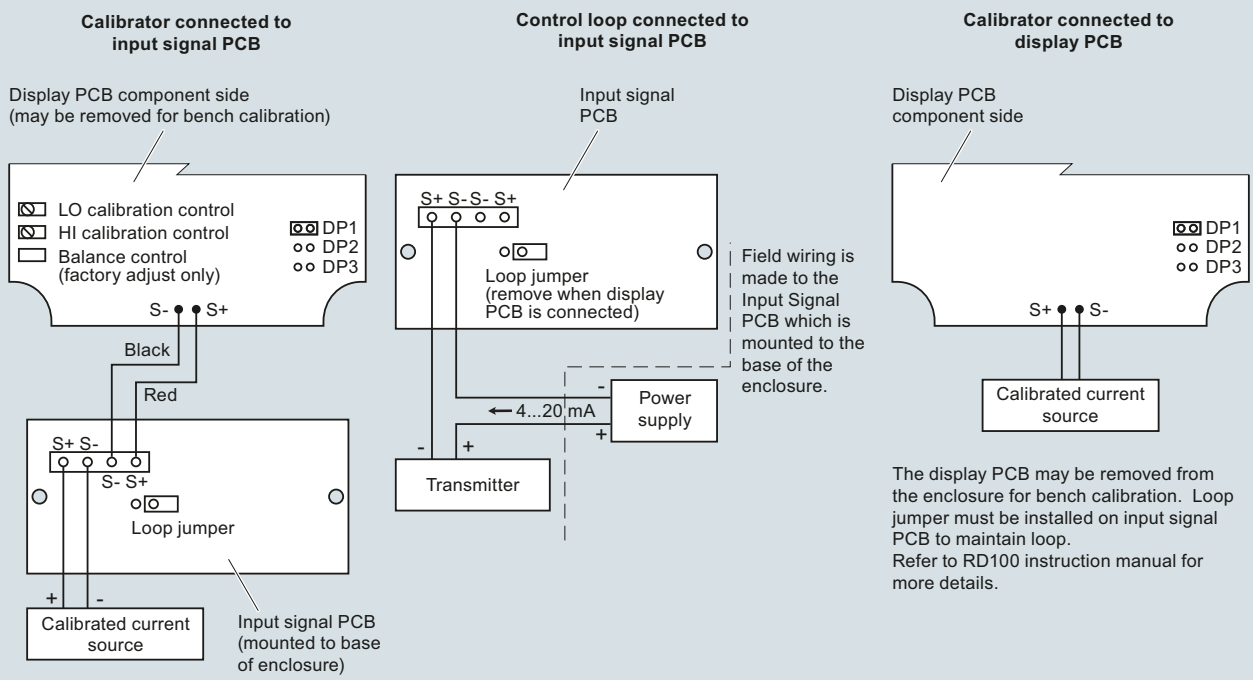

CE version

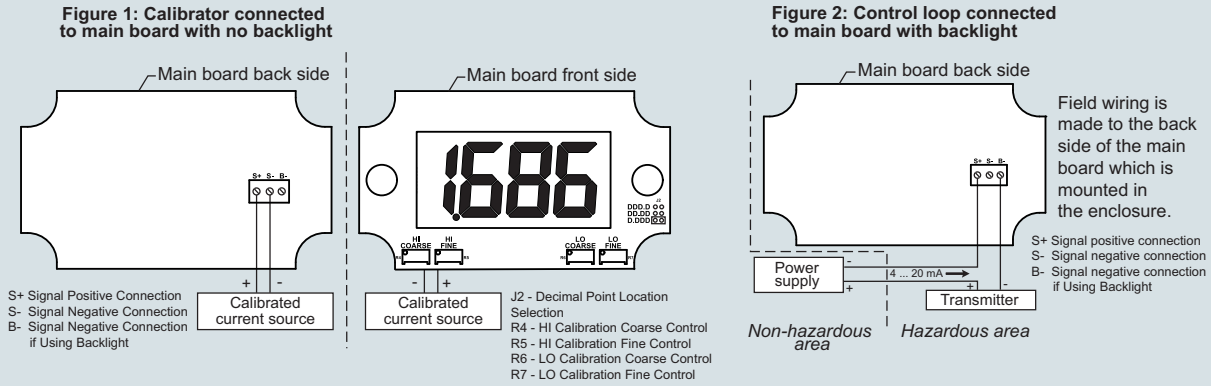

SITRANS RD100 connections

© Siemens 2020

Overview

The SITRANS RD150 is a remote display for 4 to 20 mA and HART devices.

Benefits

- Ease of use through 4 button menu driven display
- Backlit display
- HART communications
- Flexible mounting options
- Plastic, stainless steel or aluminum housings up to IP68
- Full configuration of connected sensors with optional USB Communicator and PC
- Support for multiple HART sensors with HART Multi-drop

Application

The versatile SITRANS RD150 can be installed remotely from your instrument, providing 4/20 mA or multiple HART variable readings in a safe and convenient location.

Easy to use, 4 button, menu driven, display for configuration of HART instruments via standard HART commands and full configuration of connected instruments via USB and computer.

- Key Applications: remotely displays process variables in level, flow, pressure, temperature, and weighing applications, in a 4 to 20 mA HART loop.

Technical specifications

Mode of operation	
Measuring principle	Analog to digital conversion
Measuring range	3.5 … 22.5 mA
Measuring points	HART multi-drop support
Accuracy	± 0.1 % of 20 mA
Rated operating conditions	
Without display and adjustment module	-40 … +80 °C (-40 … +176 °F)
With display and adjustment module	-20 … +70 °C (-4 … +158 °F)
Storage temperature	-40 … +80 °C (-40 … +176 °F)
Design	
Weight	
• Plastic housing	0.35 kg (0.772 lb)
• Aluminum housing	0.7 kg (1.543 lb)
• Stainless steel housing	2.0 kg (4.409 lb)
Material (enclosure)	
• Plastic housing	Plastic PBT (Polyester)
• Aluminum housing	Aluminum die-casting AlSi10Mg, powder-coated (basis: Polyester)
• Stainless steel housing	316L precision casting, blasted
Degree of protection	
• Plastic housing	IEC 60529 IP66/IP 67, NEMA Type 4X
• Housing for panel mounting (mounted)	IEC 60529 IP40, NEMA Type 1
• Aluminum/stainless steel housing	IEC 0529 IP66/IP68 (0.2 bar), NEMA Type 6P
Power supply	
External loop power supply	35 V DC max.
Display	
Number of digits	5
Digit size	7 x 13 mm (0.28 x 0.51 inch)
Certificates and approvals	See the online PIA configuration tool for details.
Options	
Mounting	• Panel Mounting • Carrier rail mounting • Pipe mounting

© Siemens 2020

Selection and ordering data

	Article No.
SITRANS RD150 Display ↗	**7ML5742-**
Remote digital display with configuration for process instruments. HART or 4 to 20 mA loop display, metal and plastic field mount enclosures.	■■■■■ - ■■■■
↗ Click on the Article No. for the online configuration in the PIA Life Cycle Portal.	
Approvals	
For Ex-free area	**0 A**
ATEX II 1G, 2G Ex ia IIC T6 Ga, Gb[4]	**0 C**
ATEX II 2G Ex db IIC T6 Gb[9)10)]	**0 F**
IEC Ex ia IIC T6 Ga, Gb[4]	**0 J**
IEC Ex db IIC T6 Gb[9)10)]	**0 M**
$_{C}CSA_{US}$ (IS) Class I, Div. 1, Groups A, B,C, D[12)]	**0 N**
$_{C}CSA_{US}$ (XP) Class I, Div. 1, Groups A, B, C, D[9)11)]	**0 R**
Electronics	
Two-wire 4 ... 20 mA/HART	**A**
Two-wire 4 ... 20 mA without HART	**B**
Housing	
Plastic[1)4)6)]	**0**
Aluminum[2)4)7)]	**1**
Stainless steel (precision casting)[2)4)7)]	**2**
For panel mounting (72 x 72 mm)[3)5)8)]	**3**
Housing protection	
IP66/IP67 NEMA 4X	**0**
IP66/IP68 NEMA 6P (0.2 bar)	**1**
IP40 NEMA 2	**2**
IP40 Type 1	**3**
Cable entry	
M20 x 1.5/Cable gland PA black (ø 5 ... 9 mm), standard	**0**
M20 x 1.5/Cable gland brass nickel plated (ø 6 ... 12 mm)	**1**
M20 x 1.5/Blind plug	**2**
M20 x 1.5/Threaded fitting brass nickel-plated; for shielded cable (ø 9 ... 13 mm)	**3**
½" NPT/Blind plug	**4**
½" NPT/Cable gland PA black (ø 5 ... 9 mm)	**5**
½" NPT/Threaded fitting brass nickel plated (ø 6 ... 12 mm)	**6**
½" NPT/Threaded fitting brass nickel plated; for shielded cable (ø 9 ... 13 mm)	**7**
Without	**8**
Display	
Without	**A**
Mounted	**B**
Mounting	
For wall mounting with aluminum or stainless steel housing	**A**
For carrier rail and wall mounting with plastic housing	**B**
For carrier rail with aluminum or stainless steel housing	**C**
For tube mounting (29 ... 60 mm) incl. mounting material	**D**
For panel mounting	**E**
Certificates	
None	**0**
3.1 Certificate/Instrument with test data	**1**
Quality and Test plan	**2**
Operating Instructions	
All literature is available to download for free, in a range of languages, at http://www.siemens.com/processinstrumentation/documentation	
Accessories	
USB communicator	**A5E35192015**

1) Available only with Housing protection option 0.
2) Available only with Housing protection option 1.
3) Available only with Housing protection option 2.
4) Available only with Cable entry options 0, 2, 4, and 5.
5) Available only without Cable entry option 8.
6) Available only with Carrier rail and Tube mount Mounting options.
7) Available only with Wall mount, Carrier rail with aluminum or stainless steel housing, and Tube mount Mounting options.
8) Available only with Panel mounting option.
9) Available only with Housing options 1 and 2.
10) Available only with Cable entry options 2, 3, 4, and 7.
11) Available only with Cable entry options 2, 3, 4, 6, and 7.
12) Not available with Cable entry option 1.

© Siemens 2020

Dimensional drawings

SITRANS RD150, aluminum/stainless steel housing

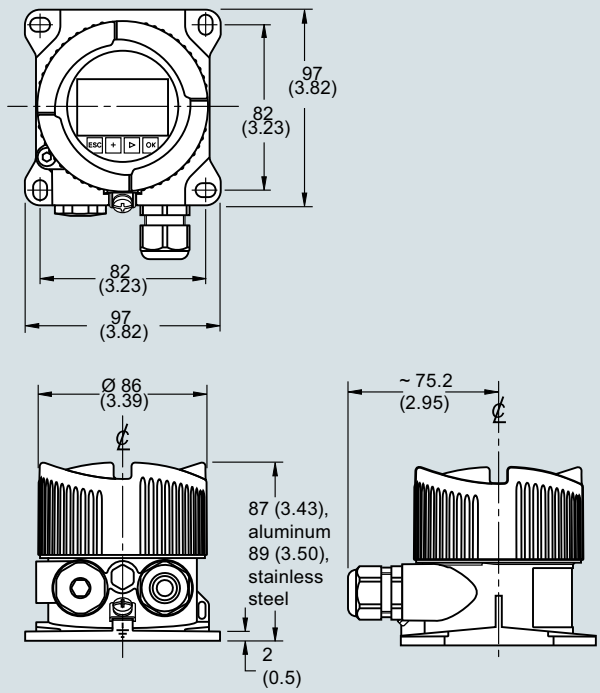

SITRANS RD150, plastic housing

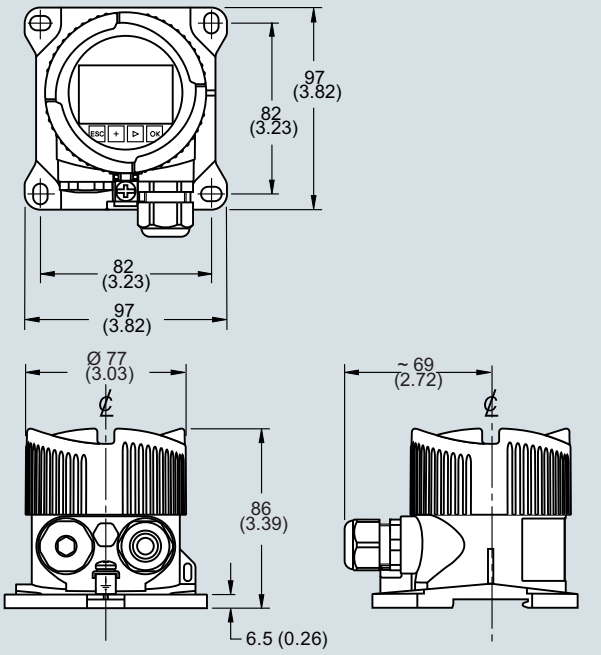

SITRANS RD150, dimensions in mm (inch)

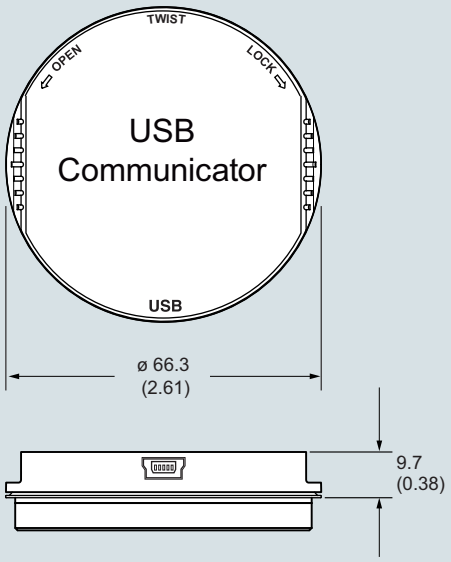

USB Communicator, dimensions in mm (inch)

Circuit diagrams

Standard housing with 2 wire device

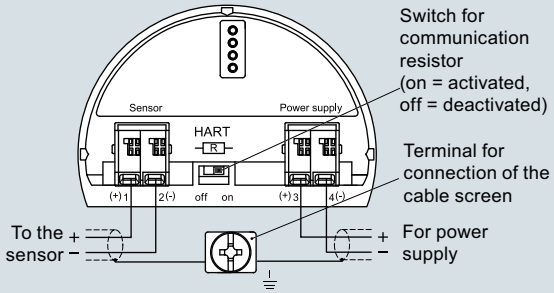

Panel mount

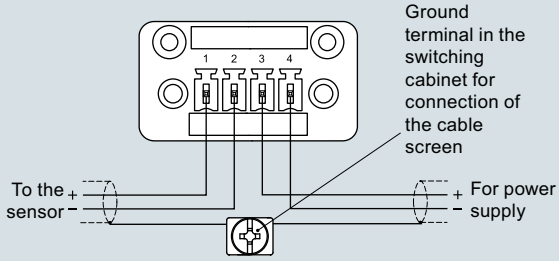

SITRANS RD150 connections

© Siemens 2020

Overview

The SITRANS RD200 is a universal input, panel mount remote digital display for process instrumentation.

Benefits

- Easy setup and programming via front panel buttons or remotely using RD software
- Display readable in sunlight
- Universal input: accepts current, voltage, thermocouple, and RTD signals
- Single or dual 24 V DC transmitter power supply
- Serial communication using built in protocol or Modbus RTU
- Two optional relays for alarm indication or process control applications
- Linear or square root function supported
- Meter Copy feature to reduce setup time, cost, and errors
- RD software supports remote configuration, monitoring, and logging for up to 100 displays
- Other features include: 4 to 20 mA analog output option, pump alternation control, and optional NEMA 4 and 4X field enclosures
- 2X option for 30.5 mm (1.2 inch) high, red LED display

Application

The RD200 is a universal remote display for level, flow, pressure, temperature, weighing, and other process instruments.

Data can be remotely collected, logged and presented from as many as 100 displays on your local computer using the free downloadable RD Software.

The display accepts a single input of current, voltage, thermocouple, and RTD. This makes the RD200 an ideal fit for use with most field instruments.

The RD200 can be set up as a standard panel mount, or combined with optional enclosures to allow it to house up to 6 displays.

- Key Applications: tank farms, pump alternation control, local or remote display of level, temperature, flow, pressure and weighing instrument values, PC monitoring, and data logging with RD Software.

Technical specifications

Mode of operation	
Measuring principle	Analog to digital conversion
Measuring points	• 1 instrument • Remote monitoring of 100 instruments with PC and RD software
Input	
Measuring range	
• Current	• 4 … 20 mA, 0 … 20 mA
• Voltage	• 0 V DC … 10 V DC, 1 … 5 V, 0 ... 5 V
• Thermocouple temperature	• Type J: -50 … +750 °C (-58 … +1 382 °F) • Type K: -50 … +1 260 °C (-58 … +2 300 °F) • Type E: -50 … +870 °C (-58 … +1 578 °F) • Type T: -180 … +371 °C (-292 … +700 °F) • Type T, 0.1° resolution: -180.0 … +371 °C (-199.9 … +700 °F)
• RTD temperature	• 100 Ω RTD: -200 … +750 °C (-328 … +1 382 °F)
Output signal	
Output	• 4 … 20 mA (optional) • Modbus RTU
Relays	2 SPDT Form C relays, rated 3 A at 30 V DC or 3 A at 250 V AC, non-inductive, auto-initializing (optional)
Communications	• RS 232 with PDC or Modbus RTU • RS 422/485 with PDC or Modbus RTU
Accuracy	
4 … 20 mA optional output	± 0.1 % FS ± 0.004 mA
Process input	± 0.05 % of span ± 1 count, square root: 10 … 100 % FS
Thermocouple temperature input	• Type J: ± 1 °C (± 2 °F) • Type K: ± 1 °C (± 2 °F) • Type E: ± 1 °C (± 2 °F) • Type T: ± 1 °C (± 2 °F) • Type T, 0.1° resolution: ± 1 °C (± 1.8 °F)
RTD temperature input	• 100 Ω RTD: ± 1 °C (± 1 °F)
Rated operating conditions	
Ambient conditions	
• Storage temperature range	-40 … +85 °C (-40 … +185 °F)
• Operating temperature range	-40 … +65 °C (-40 … +149 °F)
Design	
Weight	269 g (9.5 oz) (including options)
Material (enclosure)	• 1/8 DIN, high impact plastic, UL94V-0, color: gray • Optional plastic, steel and stainless steel (Type 304, EN 1.4301) NEMA 4 enclosures
Degree of protection	Type 4X, NEMA 4X, IP65 (front cover); panel gasket provided
Electrical connection	
mA output signal	2-core copper conductor, twisted, shielded, 0.82 … 3.30 mm² (18 … 12 AWG), Belden 8 760 or equivalent is acceptable
Electrical connection and relay connection	Copper conductor according to local requirements, rated 3 A at 250 V AC

© Siemens 2020

Power supply	
Input voltage option 1	85 … 265 V AC, 50/60 Hz; 90 … 265 V DC, 20 W max.
Input voltage option 2	12 … 36 V DC; 12 … 24 V AC, 6 W max.
Transmitter power supply	One or two isolated transmitter power supplies (optional)
• Single power supply	One 24 V DC ± 10 % at 200 mA max.
• Dual power supplies	Two 24 V DC ± 10 % at 200 mA and 40 mA max.
External loop power supply	35 V DC max.
Output loop resistance	• 24 V DC, 10 … 700 Ω max. • 35 V DC (external), 100 … 1 200 Ω max.
Displays and controls	
Display	• 14 mm (0.56 inch) high LED • 2X option for 30.5 mm (1.2 inch) high, red LED • Numeric range from -1 999 … +9 999 • Four digits, automatic lead zero blanking • Eight intensity levels
Memory	• Non-volatile • Stores settings for minimum of 10 years if power is lost
Programming	• Primary: front panel • Secondary: meter copy or PC with SITRANS RD software
Certificates and approvals	CE, UL, cUL
Options	
Enclosures	Plastic, steel, and stainless steel (Type 304, EN 1.4301) NEMA 4 and 4X enclosures
Mounting	• 2 inch (5.08 cm) pipe mounting kit (zinc plated seal) • 2 inch (5.08 cm) pipe mounting kit (stainless steel, Type 304, EN 1.4301)

© Siemens 2020

Selection and ordering data

	Article No.
SITRANS RD200 Display ↗	**7ML5740-**
Remote digital display for process instruments. With 4 to 20 mA, 0 to 10 V, RTD, and TC inputs and pump control. Panel mount with field mount enclosure options.	■■■■■ - ■ **A**
↗ Click on the Article No. for the online configuration in the PIA Life Cycle Portal.	
Input voltage	
85 ... 265 V AC, 50/60 Hz; 90 ... 265 V DC, 20 W max.	**1**
12 ... 36 V DC; 12 ... 24 V AC, 6 W max.	**2**
Transmitter supply	
None	**A**
Single 24 V DC transmitter supply[1)]	**B**
Dual 24 V DC transmitter supply[1)2)]	**C**
Output	
None	**A**
2 relays	**B**
4 ... 20 mA output	**C**
Communication	
Modbus RTU	**0**
Approvals	
CE, UL, $_C$UL	**1**
Display Size	
Standard	**0**
2X option for 30.5 mm (1.2 inch) high, red LED	**1**

1) Available with input voltage option 1 only.
2) Available with output option C only.

Selection and Ordering data	Article No
Operating Instructions	
All literature is available to download for free, in a range of languages, at http://www.siemens.com/processinstrumentation/documentation	
Accessories	
SITRANS RD200 copy cable 2.1 m (7 ft)	**7ML1930-1BR**
SITRANS RD200 RS 232 serial adapter (copy cable included)	**7ML1930-1BS**
SITRANS RD200 RS 422/485 serial adapter (copy cable included)	**7ML1930-1BT**
RS 232 to RS 422/485 isolated converter	**7ML1930-1BU**
RS 232 to RS 422/485 non-isolated converter	**7ML1930-1BV**
SITRANS RD200 RS 232 and RS 485 isolated multi-input adapter board	**7ML1930-1BW**
USB to RS 422/485 isolated converter	**7ML1930-1BX**
USB to RS 422/485 non-isolated converter	**7ML1930-1BY**
RD200 USB serial adapter	**7ML1930-6AH**
USB to RS 232 converter	**7ML1930-6AK**
RD Software CD for 1 ... 100 displays	**7ML1930-1CC**
Low cost polycarbonate plastic enclosure for 1 display	**7ML1930-1CF**
2 inch (5.08 cm) pipe mounting kit (zinc plated seal) only available with 7ML1930-1CF	**7ML1930-1BP**
2 inch (5.08 cm) pipe mounting kit (stainless steel, Type 304, EN 1.4301) only available with 7ML1930-1CF	**7ML1930-1BQ**
Thermoplastic enclosure	
For use with 1 display	**7ML1930-1CG**
For use with 2 displays	**7ML1930-1CH**
For use with 3 displays	**7ML1930-1CJ**
For use with 4 displays	**7ML1930-1CK**
For use with 5 displays	**7ML1930-1CL**
For use with 6 displays	**7ML1930-1CM**
Stainless steel enclosure (Type 304, EN 1.4301)	
For use with 1 display	**7ML1930-1CN**
For use with 2 displays	**7ML1930-1CP**
For use with 3 displays	**7ML1930-1CQ**
For use with 4 displays	**7ML1930-1CR**
For use with 5 displays	**7ML1930-1CS**
For use with 6 displays	**7ML1930-1CT**
Steel enclosure	
For use with 1 display	**7ML1930-1CU**
For use with 2 displays	**7ML1930-1CV**
For use with 3 displays	**7ML1930-1CW**
For use with 4 displays	**7ML1930-1CX**
For use with 5 displays	**7ML1930-1CY**
For use with 6 displays	**7ML1930-1DA**

© Siemens 2020

Dimensional drawings

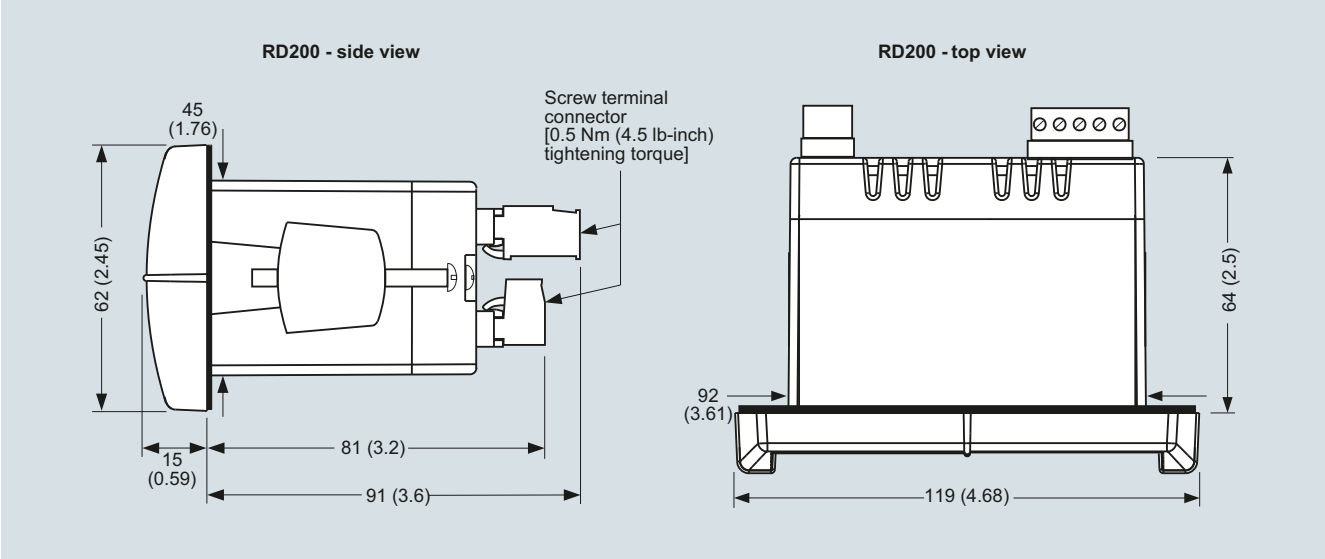

SITRANS RD200, dimensions in mm (inch)

Circuit diagrams

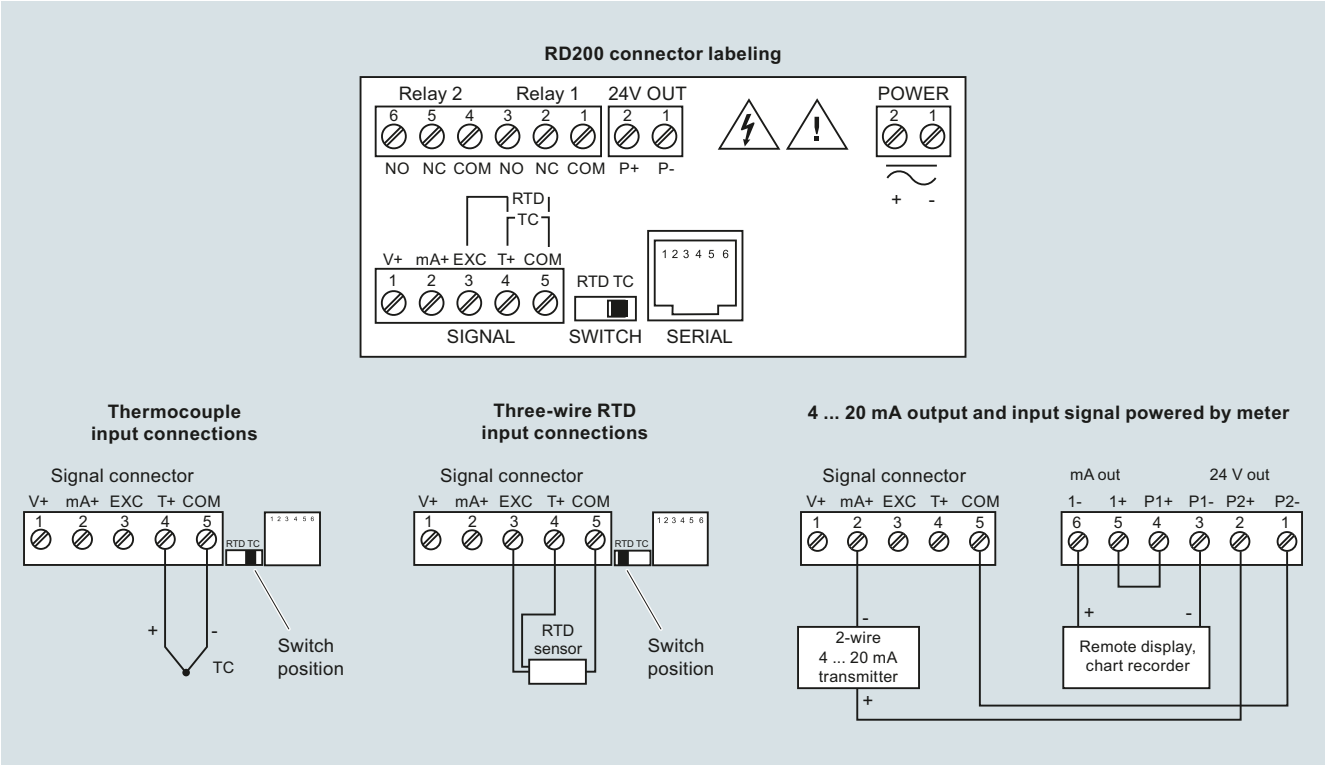

SITRANS RD200 connections

© Siemens 2020

SITRANS RD300

Overview

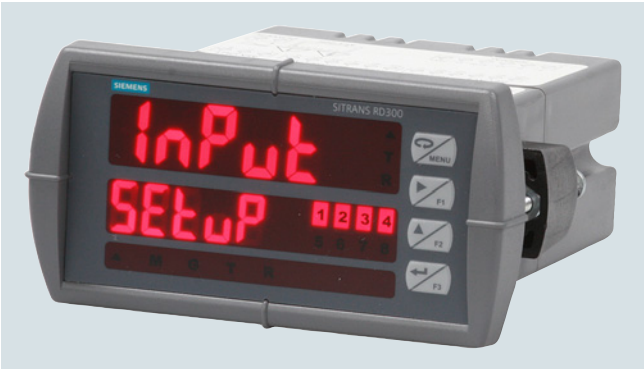

The SITRANS RD300 is a panel mount remote digital display for process instrumentation and acts as a multi-purpose, easy to use, rate/totalizer ideal for flow rate, total, and control applications.

Benefits

- Easy setup and programming via front panel buttons or using free RD software available via USB drive
- Display readable in sunlight
- Input: accepts current and voltage
- Single or dual 24 V DC transmitter power supply
- Serial communication using built in protocol or Modbus RTU
- Supports up to 8 relays and 8 digital I/O for process control and alarming
- 32-Point linearization, square root or exponential linearization
- Multi-pump alternation control
- Supports total, grand total or non-resettable grand total
- 9-digit totalizer with total overflow feature
- Large dual-line, 6-digit display
- Configure, monitor, and datalog from a PC
- Dual-input option with math functions: addition, difference, average, multiplication, division, minimum, maximum, weighted average, ratio, concentration

Application

The RD300 is a remote display for level, flow, pressure, weighing, and other process instruments. This display also acts as a multi-purpose, easy to use rate/totalizer ideal for flow rate, total, and control applications.

Data can be remotely collected, logged and presented on your local computer using the free RD software available via USB drive.

The display accepts a single or dual input of current and voltage. This makes the RD300 an ideal fit for use with most field instruments.

The RD300 can be set up as a standard panel mount, or combined with optional enclosures to allow it to house up to 6 displays.

- Key Applications: tank farms, pump alternation control, local or remote display of level, flow, pressure and weighing instrument values, PC monitoring and data logging with RD Software.

© Siemens 2020

Technical specifications

Mode of operation	
Measuring principle	Analog to digital conversion
Measuring points	1 or 2 instruments
Input	
Measuring range	
• Current	4 ... 20 mA, 0 ... 20 mA
• Voltage	0 V DC ... +10 V DC, 1 ... 5 V, 0 ... 5 V
Output signal	
Output	• 4 ... 20 mA (optional) • Modbus RTU
Relays	2 or 4 SPDT (Form C) internal and/or 4 SPST (Form A) external; rated 3 A at 30 V DC and 125/250 V AC resistive load; 1/14 HP (50 W) at 125/250 V AC for inductive loads (optional)
Communications	• RS 232 with Modbus RTU • RS 422/485 with Modbus RTU • USB configuration and monitoring port
Accuracy	
4 ... 20 mA optional output	± 0.1 % FS ± 0.004 mA
Process input	± 0.05 % of span ± 1 count, square root: 10 ... 100 % FS
Rated operating conditions	
Ambient conditions	
• Storage temperature range	-40 ... +85 °C (-40 ... +185 °F)
• Operating temperature range	-40 ... +65 °C (-40 ... +149 °F)
Design	
Weight	269 g (9.5 oz) (including options)
Material (enclosure)	• 1/8 DIN, high impact plastic, UL94V-0, color: gray • Optional plastic, steel and stainless steel (Type 304, EN 1.4301) NEMA 4 enclosures
Degree of protection	Type 4X, NEMA 4X, IP65 (front cover); panel gasket provided

Electrical connection	
mA output signal	2-core copper conductor, twisted, shielded, 0.82 ... 3.30 mm² (18 ... 12 AWG), Belden 8 760 or equivalent is acceptable
Electrical connection and relay connection	Copper conductor according to local requirements, rated 3 A at 250 V AC
Power supply	
Input voltage option	85 ... 265 V AC, 50/60 Hz; 90 ... 265 V DC, 20 W max. or jumper selectable 12/24 V DC ± 10 %, 15 W max.
Transmitter power supply	Terminals P+ & P-: 24 V DC ± 10 %, 12/24 V DC powered models selectable for 24, 10, or 5 V DC supply (internal jumper J4), 85 ... 265 V AC models rated at 200 mA max, 12/24 V DC powered models rated at 100 mA max., at 50 mA max. for 5 or 10 V DC supply.
External loop power supply	35 V DC max.
Output loop resistance	• 24 V DC, 10 ... 700 Ω max. • 35 V DC (external), 100 ... 1 200 Ω max.
Displays and controls	
Main display	0.6 inch (15 mm) high, red LEDs
Second display	0.46 inch (12 mm) high, red LEDs, 6-digits: each (-99 999 ... 999 999)
Memory	• Non-volatile • Stores settings for minimum of 10 years if power is lost
Programming	• Primary: front panel • Secondary: Meter Copy or PC with SITRANS RD Software
Certificates and approvals	CE, UL, $_C$UL
Options	
Enclosures	Plastic, steel and stainless steel (Type 304, EN 1.4301) NEMA 4 and 4X enclosures

© Siemens 2020

Selection and ordering data

	Article No.
SITRANS RD300 Display ↗	**7ML5744-**
Remote digital panel mount process display with current or voltage inputs. Two input, multi-line display, totalizer and pump control.	■■■■■ **- 0 A**
↗ Click on the Article No. for the online configuration in the PIA Life Cycle Portal.	
Input voltage	
85 ... 265 V AC, 50/60 Hz; 90 ... 265 V DC, 20 W max.	**1**
12 ... 36 V DC; 12 ... 24 V AC, 6 W max.	**2**
Output	
None	**A**
2 Relays	**B**
4 Relays	**C**
4 ... 20 mA output	**D**
2 Relays and 4 ... 20 mA output	**E**
4 Relays and 4 ... 20 mA output	**F**
Type	
Single input process and flow rate/totalizer Mtr	**A**
Dual input process Mtr	**B**
Display	
Standard	**0**
SunBright	**1**
Approvals	
UL, C-UL and CE	**0**

Selection and Ordering data	Article No.
Operating Instructions	
All literature is available to download for free, in a range of languages, at http://www.siemens.com/processinstrumentation/documentation	
Accessories	
DIN-Rail Mounting Kit	**7ML1930-6AB**
4 Relays Expansion Module	**7ML1930-6AC**
4 Digital I/O Module	**7ML1930-6AD**
Dual output 4 ... 20 mA expansion module for dual input meter	**7ML1930-6AP**
Meter Copy Cable	**7ML1930-6AE**
RD300 RS 232 Serial Adapter	**7ML1930-6AF**
RD300 RS 422/485 Serial Adapter	**7ML1930-6AG**
RD300 USB Serial Adapter	**7ML1930-6AJ**
USB to RS 232 Converter	**7ML1930-6AK**
RS 232 to RS 422/485 isolated converter	**7ML1930-1BU**
RS 232 to RS 422/485 non-isolated converter	**7ML1930-1BV**
USB to RS 422/485 isolated converter	**7ML1930-1BX**
USB to RS 422/485 non-isolated converter	**7ML1930-1BY**
Snubber	**7ML1930-6AL**
Plastic enclosure	
For 1 meter	**7ML1930-6AM**
For 2 meters	**7ML1930-6AN**
For 4 meters	**7ML1930-1CK**
For 5 meters	**7ML1930-1CL**
For 6 meters	**7ML1930-1CM**

Dimensional drawings

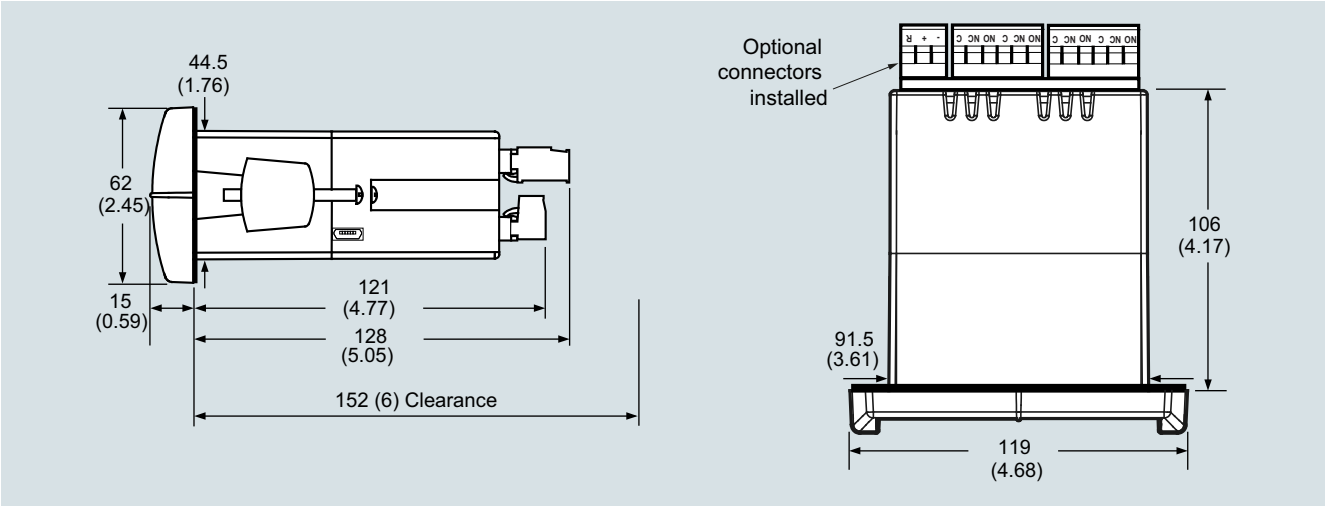

SITRANS RD300, dimensions in mm (inch)

© Siemens 2020

Circuit diagrams

Connector labeling for fully loaded single input meter

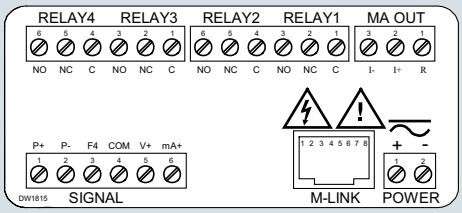

Transmitter powered by external supply or self-powered

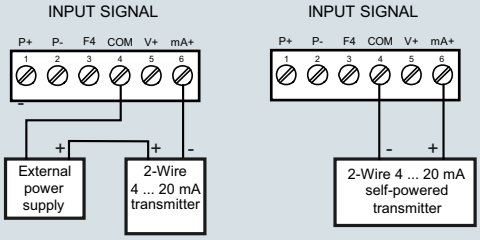

Transmitter powered by internal supply

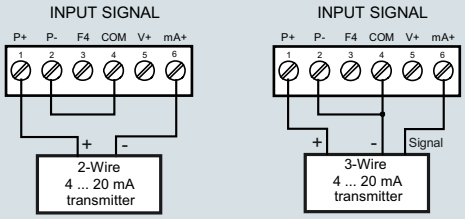

Voltage Input Connections

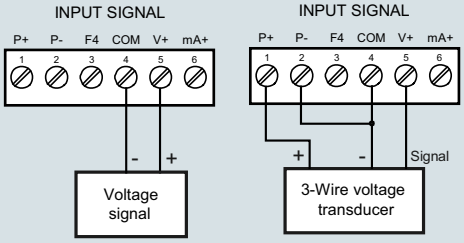

SITRANS RD300 connections

© Siemens 2020

SITRANS AW200 WirelessHART adapter

Overview

SITRANS AW200 WirelessHART Adapter

The WirelessHART adapter SITRANS AW200 is a battery-powered communication component that integrates the HART and 4 to 20 mA field devices into a WirelessHART network. On the wireless communication side, the adapter supports the WirelessHART standard. HART and 4 to 20 mA field devices are connected on the field device side.

The WirelessHART adapter SITRANS AW200:

- Supports the WirelessHART standard (HART V 7.1)
- Features an extremely high degree of security for wireless data transmission.
- Integrates a 4 to 20 mA field device or up to four HART field devices (in multidrop mode) into a WirelessHART network.
- Features an intelligent energy management system for supplying connected field devices.
- Easy to configure with SIMATIC PDM.

Benefits

- High quality and service life
- Save on wiring costs in difficult installation conditions (e.g. for moveable components) and for temporary installations.
- Subsequent integration of an installed field device with a HART interface into maintenance and diagnostic systems if the control system does not feature the required communication mechanisms.
- Proven HART devices can continue to be used for wireless communication without any limitations.
- Field devices with 4 to 20 mA interface (without HART) can be connected.
- Intelligent energy management to achieve the best possible service life for the installed battery unit
- Optimum addition to wired communication and expansion of solution options for system solutions in process automation
- Burst mode and event notification configuration for the adapter and connected field devices.

Application

The WirelessHART adapter can be used in a number of different applications:

- Access to installed basis
  Diagnostic information is obtained from existing wired HART devices thanks to the permanent electrical connection of a WirelessHART adapter, and is sent to system-based asset management software.
- Status monitoring of system
  Wireless devices are mounted at critical points in the system, which are not usually connected to the control room due to difficult accessibility or extensive costs for wiring. Better data flow and diagnostics increase plant reliability, transparency and safety.
- Process optimization
  Temporary installation of a 4 to 20mA or standard HART device together with a SITRANS AW200 WirelessHART adapter allows easier monitoring and plant optimization at lower costs.
- Process monitoring
  Measured values, for example from tanks or silos, are transmitted to a higher-level system at regular intervals, together with the device and battery status.

Design

The SITRANS AW200 WirelessHART Adapter consists of:

- An enclosure with a fitted aerial
- Electronics
- A high-performance lithium battery unit

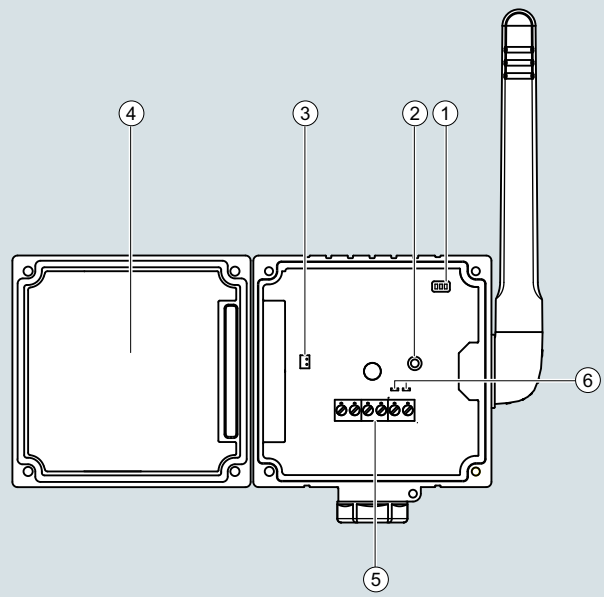

1 LED
2 Push button
3 Plug to connect battery
4 Battery compartment
5 Terminals 1 to 6
6 Terminal tag for HART modem

SITRANS AW200 Wireless-HART Adapter, assembly

The enclosure can be opened by loosening 4 screws. This enables you to access the electronics and battery unit. The battery unit is removed without the use of tools, since it is connected to the housing with clips.

© Siemens 2020

On the back of the enclosure is the connector with a fixing nut onto which various different replaceable connecting pieces can be screwed to mount the adapter straight onto a field device.

On the base of the enclosure is an optional cable inlet which can be used for a cable gland. Up to 2 cables can be inserted for offset adapter installation.

Function

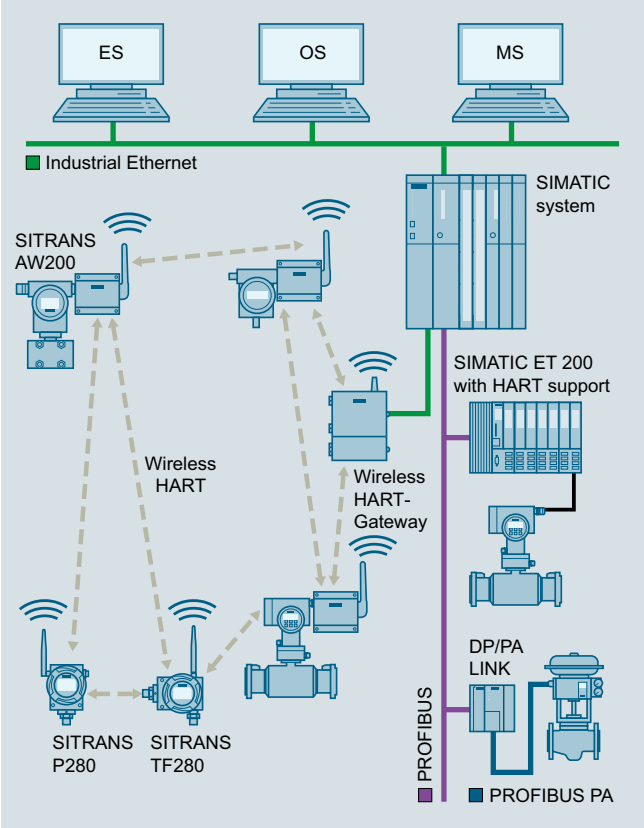

SITRANS AW200 WirelessHART Adapter. functional diagram

Measured values and diagnostic information of connected field devices with HART communication are transmitted via a wired connection to the WirelessHART adapter. The adapter transmits this information as wireless signals to a WirelessHART gateway. From here, the information is available to the network of the system.

If a field device with a 4 to 20 mA output signal is connected to the adapter, only the measured value will be transmitted.

Following configuration and integration into a WirelessHART network, each WirelessHART adapter is able to recognize its neighbors. It notes the strength of the wireless signal, synchronizes itself, receives network information and then establishes connections to its neighbors in the wireless network. A WirelessHART network organizes itself. Manual settings for organization are not required.

Two and four-wire field devices can be connected to a WirelessHART adapter. In the case of a connected two-wire field device, voltage can be supplied by the adapter. Where multiple two-wire field devices are connected (multi drop operation), the adapter must be connected to an external power supply.

The WirelessHART adapter may also be connected in parallel to an already existing installation which consists of a power supply and a HART field device.

Connection	Wiring	Function
1		Power supply for the field device
2		HART/4 ... 20 mA
3		External supply/Dimensions
4		High-resistance HART connection
5, 7		High-resistance HART connection
6, 8		Mass, high-resistance connection

Terminal block with 6 screw connection clamps

Parameter assignment

SITRANS AW200 configured via HART. Configuration can be carried out using a handheld communicator or, more conveniently, with a HART modem and the SIMATIC PDM configuration software.

Initial startup of the adapter is usually carried out via SIMATIC PDM and a HART modem or a handheld communicator. During initial startup, the network ID and join key are set in the adapter. These parameters are used to integrate the adapter into an existing WirelessHART network.

Following integration into the network, the adapter and HART devices connected can be conveniently operated via the WirelessHART network or with the local HART modem.

Siemens HART field devices for the adapter

HART and 4…20mA field devices can be connected to the SITRANS AW200 WirelessHART adapter. Depending on the electrical data of the field devices, they can receive their power supply from the WirelessHART adapter or will require an external power supply. See https://support.industry.siemens.com/cs/ww/en/ for FAQ with the latest information on connectivity for Siemens field devices.

Note

Siemens has only approved the Siemens HART field devices listed there for the adapter, and will only provide technical support for these devices.

Based on HART specifications, it is generally possible to connect devices that are not listed, however with the following restrictions:

- All warranties and liability will be excluded
- No technical support

© Siemens 2020

Technical specifications

Input	
Input	Point-to-Point connection to a HART field device or Point-to-Point connection to a 4 ... 20 mA field device or up to four HART field devices with external power supply which are integrated using the multidrop method
Communication	HART communication using multidrop method, 4 ... 20 mA power signal with Point-to-Point connection
Protocol	HART V7 (compatible with previous HART versions)
Transfer rate	1200 bits/s using HART multidrop method
Output	
Communication	WirelessHART V7
Transfer rate	Nominal 250 kBits/s
Transmission frequency band	2.4 GHZ (ISM band)
Range (under reference conditions)	Outside areas up to 250 m, within buildings up to 50 m
RF signal strength	Can be configured: 0 dBm and 10 dBm
Output signals	
• WirelessHART adapter	Measured voltage and up to 3 other variables may be selected from the following: adapter temperature, battery voltage, energy consumed, expected battery service life
• 4 ... 20 mA field device	Scaled or linearized process values
• HART field device	Up to 4 process variables, can be configured via PDM or gateway
Measuring accuracy (as per reference conditions IEC 61298-2)	
Max. measuring error (4 ... 20 mA circuit)	0.125 % re: measuring range
Effect of ambient temperature (4 ... 20 mA circuit)	5 µA/0°K
Rated conditions	
Location	Outside/inside
Ambient conditions	
• Ambient temperature	-40 ... +80 °C (-40 ... +176 °F) The capacity of the battery decreases rapidly if the ambient temperature falls below -30 °C.
• Storage temperature	-40 ... +85 °C (-40 ... +185 °F) without batteries < 21 °C with batteries
• Relative humidity	Max 90 % at 25 °C (non-condensating)
• Resistance to vibration	20 ≤ f ≤ 2000 Hz: 0.01 g^2/Hz as per IEC 68-2-64
• Shock resistance	15 g, 11 ms as per IEC 68-2-27
Electromagnetic compatibility	Acc. to EN 61326, EN 301 489-1/17 and NAMUR NE 21

Design	
Weight	• 0.5 kg without battery • 0.75 kg with battery
Enclosure	
• Material	• Polyester (PBT FR) • Aluminum
• Cable entry	2x M20x1.5
Degree of protection	IP65, IP66; NEMA 4
Aerial	Omnidirectional dipolar aerial, vertical rotation
Mounting adapter	M20x1.5 to M20x1.5, M20x1.5 to G½, M20x1.5 to ½ - 14 NPT, M20x1.5 to ¾ - 14 NPT
Auxiliary power	
Battery	Lithium thionylchlorid high-performance battery unit
Supply voltage	5 V DC ... 7.2 V DC
Capacity	19 AH at 20 °C
Service life	5 ... 7 years, depending on update rate, connected field device and ambient conditions
Field device voltage supply (not in multidrop mode)	
• No-load voltage	8 ... 23 V DC
• Current	4 … 20mA (in accordance with NAMUR Recommendation NE 43)
• Fault current (not with multidrop)	I ≤ 3.6 mA or I ≥ 21 mA
• Protection	Short-circuit proof, activated at voltages > 25 mA
Voltage supply for one or more field devices (in multidrop mode)	
• Voltage	< 30 V direct current
• Current	< 25 mA
Certificates and approvals	
Wireless communication approvals	ETSI (R&TTE) FCC Part 15.247 for wireless applications in the 2.4 GHz transmission frequency band EN 300 328
ATEX approvals	ATEX II 2G Ex ia IIC T4/T3 Gb ATEX II 2G Ex ia IIC T4/T3 Gb, ATEX II 2D Ex tb [ia] IIIC IP6x T 70°C Db
CSA approvals	Class I, DIV 1, GRP ABCD Class I, DIV 2, GRP ABCD Class I, Zone 1, Ex ia IIC, AEx ia IIC T4/T3C Class II, DIV 1, GRP EFG Class II, DIV 2, GRP FG Class III
IECEx approvals	IECEx Ex ia IIC T4/T3 Gb IECEx Ex ia IIC T4/T3 Gb, IECEx Ex tb [ia] IIIC T 70°C Db

© Siemens 2020

Selection and ordering data

	Article No.
SITRANS AW200 Wireless HART Adapter ↗	**7MP3112-** ■■■■ **0 - 0 A A 0 0**
↗ Click on the Article No. for the online configuration in the PIA Life Cycle Portal.	
Device type	
4 ... 20 mA and/or Wireless Hart Interface	**1**
Power supply	
Battery powered	**A**
Approvals and certificates	
Without explosion protection	**A**
ATEX II 2G Ex ia IIC T4/T3 Gb	**B 0**
ATEX II 2G Ex ia IIC T4/T3 Gb, ATEX II 2D Ex tb [ia] IIIC IP6x T 70°C Db	**C 1**
CSA Universal application	**D**
Class I, DIV 1, DIV 2, GRP ABCD, Class I, Zone 1, Ex ia IIC, AEx ia IIC T4/T3C, Class II, DIV 1, GRP EFG, DIV 2, GRP FG, Class III	**E**
IECEx Ex ia IIC T4/T3 Gb	**F 0**
IECEx Ex ia IIC T4/T3 Gb, IECEx Ex tb [ia] IIIC T 70°C Db	**G 1**
Enclosure	
Polyester, IP66, NEMA Type 4	**0**
Aluminum, IP66/67 NEMA Type 4X	**1**
Accessories	
Lithium battery for SITRANS AW200	**7MP3990-0AA00**
Threaded adapter for direct mounting of the adapter to a field device	
• Threaded adapter M20	**7MP3990-0BA00**
• Threaded adapter G½	**7MP3990-0BB00**
• Threaded adapter G½ - 14 NPT	**7MP3990-0BC00**
• Threaded adapter G¾ - 14 NPT	
Mounting bracket for mounting to wall/pipe, material: Stainless steel SS304, including cable gland	**7MP3990-0BD00**

© Siemens 2020

Dimensional drawings

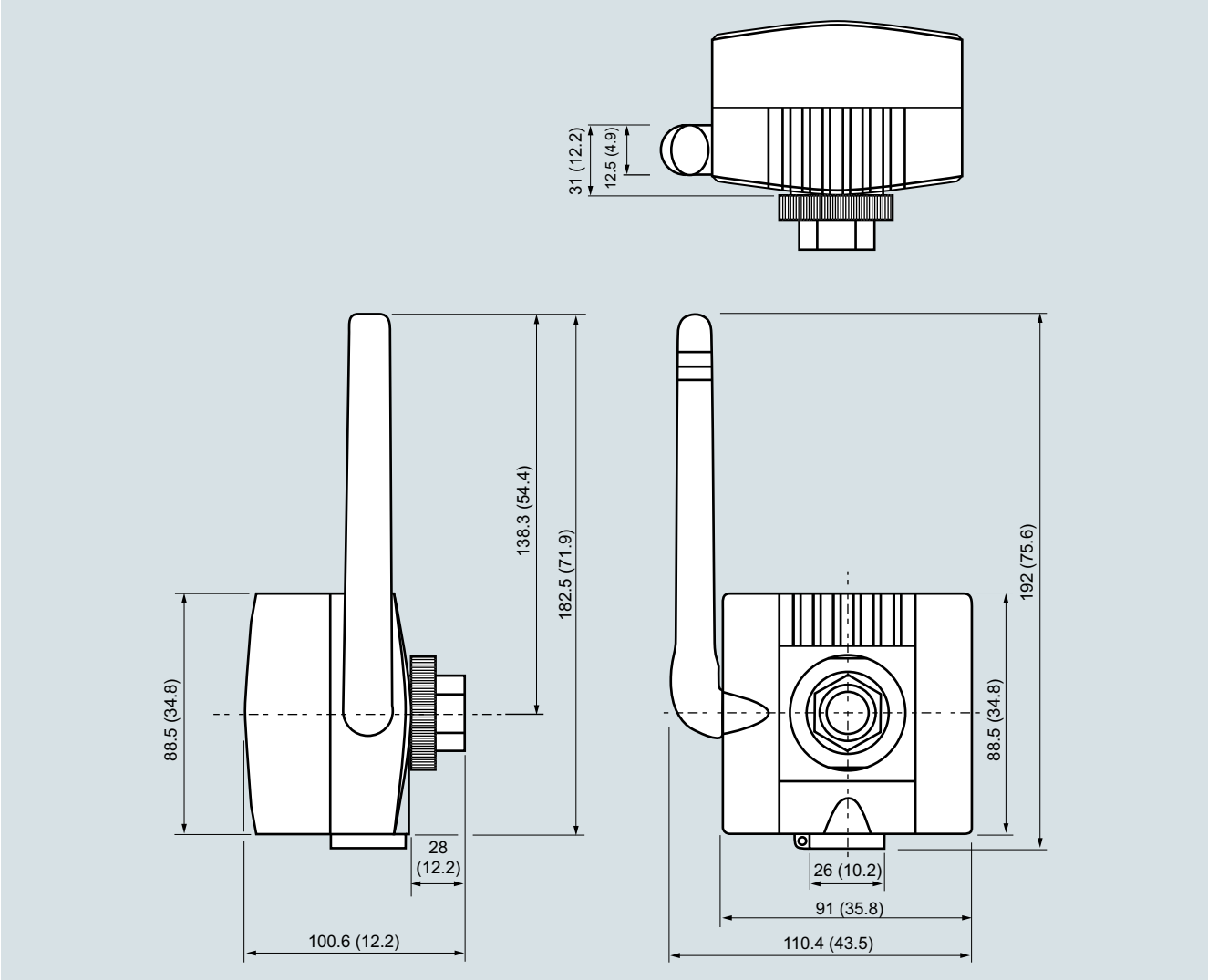

SITRANS AW200 WirelessHART Adapter, dimensions in mm (inch)

© Siemens 2020

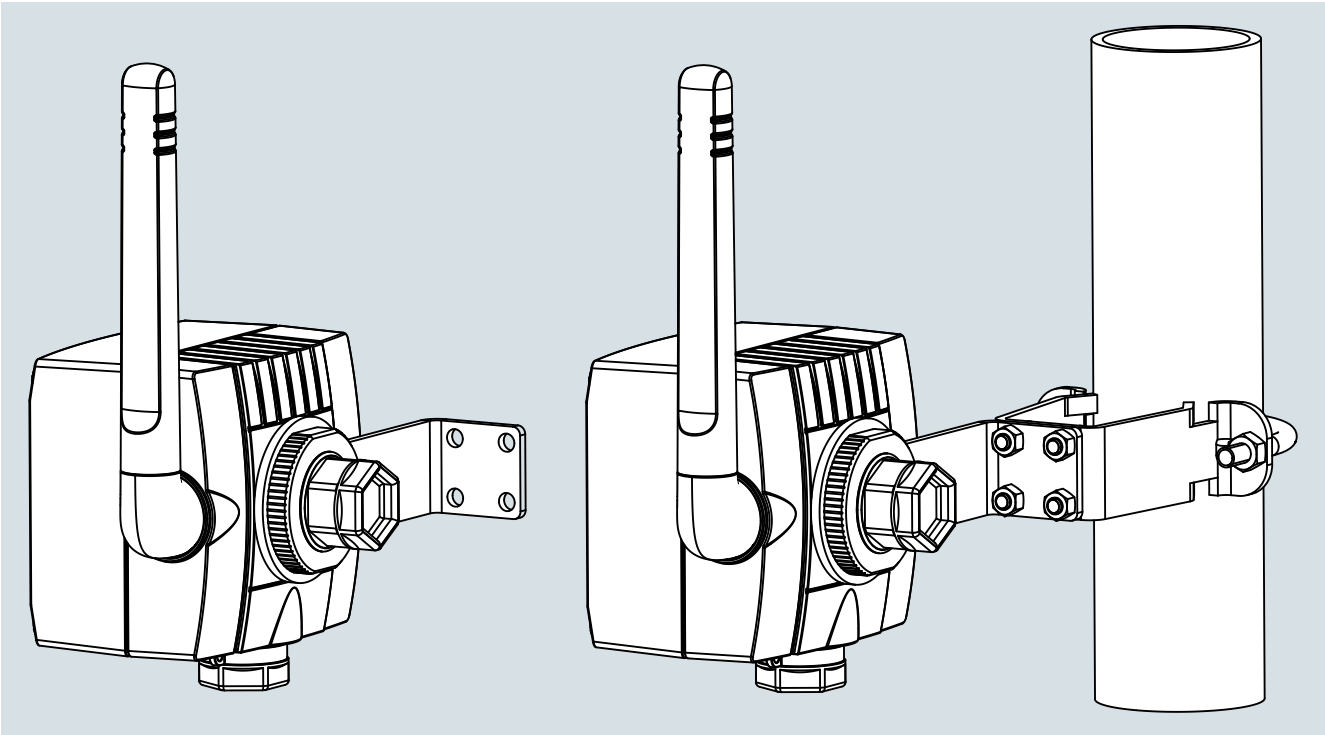

SITRANS AW200 with built-in mounting bracket for wall or pipe mounting

Circuit diagrams

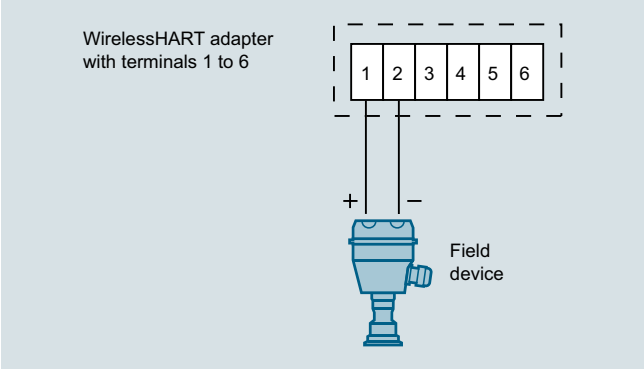

Connection of two-wire field device, power supply provided by adapter

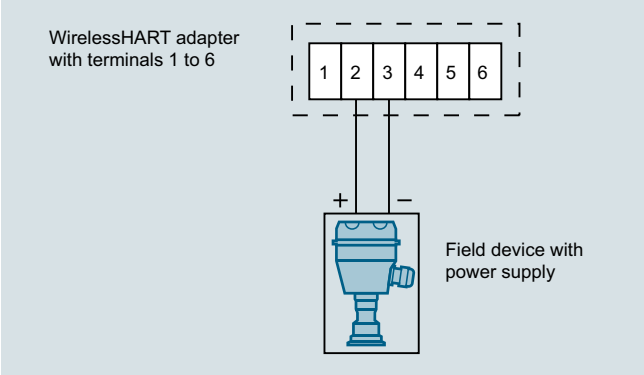

Connection of four-wire field device

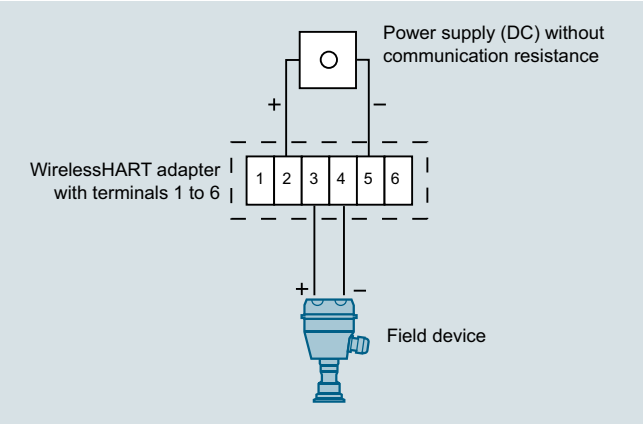

Connection of two-wire field device with external power supply

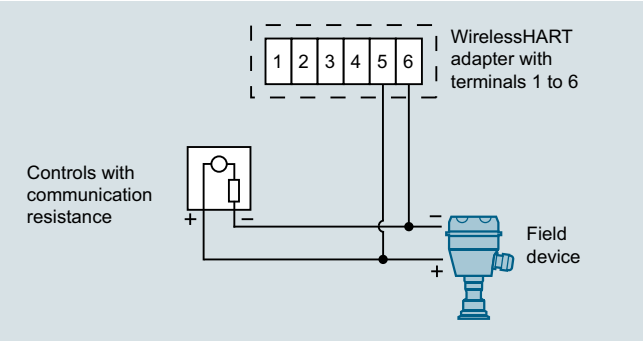

Connecting the adapter in parallel with wired 4 to 20 mA communication.

© Siemens 2020

Overview

The devices of the RTU3000C family are compact telecontrol stations (RTU: Remote Terminal Unit) for applications with their own power supply. They are particularly suited for monitoring and control of external stations that are not connected to an energy supply network. The RTUs can independently collect data from connected sensors with time stamps, preprocess the data, and transfer it to a control center. The RTU3000C is supplied with power by a battery, an accumulator or a solar panel or by a 12 … 24 V DC power supply unit.

The devices of the RTU3000C series are characterized by the following properties:

- Worldwide data exchange between a remote measuring point and a control center via public or private networks (WAN), e.g. mobile radio networks, Internet.
- Communication with a control center (telecontrol center) with the help of the DNP3, IEC 60870-5-104 or SINAUT ST7 telecontrol protocols
- Connection to a control center with TeleControl Server Basic
- Acquisition of process signals, alarms, count pulses, measured values or output of switching commands by means of integrated inputs as well as digital inputs and outputs
- Preprocessing of the acquired signals by a variety of function/program blocks
- FTP client functionality for transmitting data to an FTP server
- Time synchronization
  - On the basis of NTP (**N**etwork **T**ime **P**rotocol)
  - By means of the partner in the control center
  - Via the mobile radio network (RTU3030C, RTU3031C and RTU3041C)
  - Via GPS (RTU3031C and RTU3041C)
- Automatic alarm transmission per email or text message
- Use as data logger by saving the process values to SD card
- Data buffering in the substations in the event of connection failures
- LED signaling for fast diagnostics
- Compact industrial enclosure in S7-1200 design for mounting on a standard DIN rail
- Use in harsh environment thanks to extended temperature range from -40 to +70 °C and IP68 protection thanks to optional protective enclosure
- Fast commissioning thanks to easy configuration using the integrated web server

Additional RTU3030C and RTU3031C features:

- Integrated UMTS modem for global wireless data exchange between a remote measuring point and a control center based on the mobile radio standard UMTS (**U**niversal **M**obile **T**elecommunications**S**ystem) with data transmission rates of up to 21 Mbps in the downlink (HSDPA) and 5.76 Mbps in the uplink (HSUPA)
- UMTS operation with fixed or dynamic IP addresses, depending on telecommunication contract
- Time synchronization over the mobile radio network
- Wake-up of station from sleep mode by means of text message or call

Additional RTU3031C features as compared to RTU3030C:

- Support for 4 additional digital outputs designed as solid-state relays
- GPS antenna connection option for localization and time synchronization
- Function block for comparison of the setpoint/actual position

For RTU3041C:

- Integrated modem for global wireless data exchange between a remote measuring point and a control point on the basis of the LTE-M and NB-IoT mobile radio standards.
- With the sole exception of the mobile radio interface, the further functional scope corresponds with that of the RTU3031C.

Please note that not all network operators for LTE-M and NB-IoT support the text messaging (SMS) function.

Additional functions with firmware V4.0

- Only for RTU3041C: Power saving function eDRX (Extended Discontinuous Reception) for LTE-M and NB-IoT mobile radio networks, in order to reduce the energy consumption.
- Function block "Formula": The function block calculates the result of the specified mathematical or Boolean expression, depending on as many as four input variables.

Additional functions with firmware V3.1

- Connection of sensors via Modbus RTU (as of firmware V3.0) or HART Multidrop (as of V3.1) via the optional Extension Board HART/RS485
- Remote access to HART devices on the Extension Board HART/RS485 via SIMATIC PDM
- Remote access to Modbus devices on the Extension Board HART/RS485 via SIMATIC PDM
- Connection of the RTU3000C to a redundant DNP3 Master
- Local logging of Security and Audit events
- Central logging of Security and Audit events using syslog
- Increase the quantity structure of the function blocks and flags
- More efficient encryption mechanisms with TLS connections for HTTPS, Mail, FTP, DynDNS and VPN product versions

© Siemens 2020

Product variants

Different product versions are offered for the various applications:

- **SIMATIC RTU3010C**
  Compact RTU for variable power supply using batteries, rechargeable batteries, solar or 10.8 V DC to 28.8 V DC for connection to external industry routers; connection to control center via TeleControl Basic, DNP3, IEC60870-5-104 or SINAUT ST7 protocols, on-board I/O (8 DI, 4 DO, 4 AI), configuration and diagnostics per web interface
- **SIMATIC RTU3030C**
  Compact RTU for variable power supply using batteries, rechargeable batteries, solar or 10.8 V DC to 28.8 V DC with integrated UMTS modem; connection to control center via TeleControl Basic, DNP3, IEC60870-5-104 or SINAUT ST7 protocols, on-board I/O (8 DI, 4 DO, 4 AI), configuration and diagnostics per web interface; note country-specific approvals.
- **SIMATIC RTU3031C**
  Compact RTU for variable power supply using batteries, rechargeable batteries, solar or 10.8 V DC to 28.8 V DC with integrated UMTS modem; GPS functionality; connection to control center via TeleControl Basic, DNP3, IEC60870-5-104 or SINAUT ST7 protocols, on-board I/O (8 DI, 8 DO, 4 AI), configuration and diagnostics per web interface; note country-specific approvals.
- **SIMATIC RTU3041C**
  Compact RTU for variable power supply using batteries, rechargeable batteries, solar or 10.8 V DC to 28.8 V DC with integrated modem for LTE-M/NB-IoT; GPS functionality; connection to control center via TeleControl Basic, DNP3, IEC60870-5-104 or SINAUT ST7 protocols, on-board I/O (8 DI, 8 DO, 4 AI), configuration and diagnostics per web interface; note country-specific approvals.

In conjunction with the "TeleControl Server Basic" control room software, the RTU3000C forms a telecontrol system with additional properties:

- Connection of up to 5 000 telecontrol stations to the control center via OPC UA
- Central status monitoring of the substations
- No special provider services required for fixed IP addresses
- Wireless teleservice access to the substations
- Wake-up of substations by calling or text message

Benefits

- **Flexible location of use**
  A flexible power supply concept allows for use of the RTU3000C at different measuring points in a widely distributed network, independent of an existing power supply network.
- **Rugged hardware**
  The rugged hardware enables reliable operation even in harsh environments with an increased temperature range (-40 °C to +70 °C).
- **Flexible connection to control centers**
  Thanks to reloadable telecontrol protocols, various applications and connection options to different control centers are supported in one device.
- **Fast and flexible data communication**
  Time- and event-driven communication ensures that the operating personnel is informed immediately and reliably about process alarms, statuses and values.
- **Simple and cost-efficient engineering**
  The integrated web server enables easy configuration using the standard web browser without additional engineering tools.
- **Remote access** to HART or Modbus devices on the Extension Board HART/RS485 via SIMATIC PDM.
- **Fully automatic time stamp**
  To enable subsequent and correct archiving of process data in the control system, all data frames are time-stamped at their place of origin.
- **Automatic buffering of process values**
  Data is buffered in the substations to prevent it getting lost in case of connection failures.
- **Secure data transmission**
  Use of OpenVPN technology and encrypted email connections ensures secure data transmission.
  The RTUs also support secure HTTPS access to the web server both over the local Ethernet interface and remotely, e.g. via mobile wireless. In addition, the FTP file transfer can also be carried out with encryption.
- **Time not lost in case of a power outage**
  A buffered real time clock ensures that the correct time is available even after a power outage.
- **Savings on travel and maintenance**
  Thanks to web-based management, configuring, diagnostics, control and monitoring can easily be performed remotely.

Application

The telecontrol stations of the RTU3000C family can be used as a substation (Remote Terminal Unit) in telecontrol applications. Typical applications include the acquisition of measured values in plants that are spread over large geographical areas (e.g. level monitoring of water tanks in the water/wastewater industry).

- Data exchange and centralized data monitoring for automation systems spread over large geographical areas, including integrated GPS positioning functionality for RTU30x1C
- Connection of difficult-to-access external stations without network infrastructure
- Connection of measuring points at locations without power supply infrastructure

These applications can be found in the most diverse industries:

- Water/wastewater treatment plants
  - Detection of leaks or water loss
  - Monitoring of pumping stations, water towers/reservoirs
  - Acquisition and monitoring of level / pressure / flow / temperature
  - Flood protection
- Inventory management—monitoring of levels in tanks and silos
- Agriculture—monitoring of irrigation systems or greenhouses
- Wind power—wind measurement for designing wind turbines
- Control and localization of mobile stations, such as monitoring of navigation buoys

© Siemens 2020

Design

The SIMATIC RTU3000C is a compact module in SIMATIC S7-1200 format:

- Rugged, compact plastic enclosure for the temperature range -40 °C to +70 °C
- Easily accessible connection and diagnostics elements
- Easy mounting on a standard DIN rail
- Four plug-in screw-type terminals for eight digital inputs (pushbutton/switch/relay contacts) of which the first two inputs can be configured as counter inputs.
- Four plug-in screw-type terminals for four analog inputs: Current / voltage (0/4 … 20 mA, 0 … 10 V, 0 … 5 V) or temperature measurement (Pt1000)
- Two plug-in screw-type terminals for four digital outputs designed as relay contacts
- RTU30x1C: two additional plug-in screw terminals for four additional digital outputs, designed as solid-state relays
- The close-loop (12 V or 24 V can be selected) and switchable controller outputs X10/X11 can be used for the supply of sensors and actuators
- 5-pin, plug-in terminal strip for connection of an 12 ... 24 V DC external supply voltage; connection protected against polarity reversal
- Connection socket for battery module (up to six battery modules can be connected)
- RJ45 socket for connection to Industrial Ethernet at 10/100 Mbps
- Pushbutton for the functions wake-up, shutdown, warm restart or reset to factory settings
- Slot for an SD card (Siemens SMC, SD or SDHC)
- Installed temperature sensor for monitoring of temperature inside enclosure

RTU3030C and RTU30x1C additions:

- SMA antenna port for mobile network antenna
- Slot for a mini SIM card

RTU30x1C additions:

- Antenna port for GPS antenna
- Support for 4 additional digital outputs designed as solid-state relays

The telecontrol stations of the RTU3000C family can be used in stand-alone operation. The power supply can take place in independent operation by means of battery / accumulator /solar panel. The optional batteries are connected directly on the left side of the device without additional wiring. The power can also be supplied by a 5-pin terminal strip on the bottom of the module, even in combination with battery modules. The SD card tray is located on the front of the module. Removable screw-type terminals make for quick module replacement because the connected sensors must not be wired again.

© Siemens 2020

Function

The devices of the RTU3000C family are compact telecontrol stations. They enable connection of remote measuring points to TeleControl Server Basic or another control center and monitoring of these measuring points. To ensure autonomous operation the devices can also switch between four different operating modes:

- **Sleep mode** All inputs and communication functions are turned off so that energy consumption is minimal. Outputs can retain their last value.
- **Update mode** Used to query the inputs and outputs. The query cycle can be configured individually.
- **Communication mode** Mobile wireless connection or connection via LAN interface and external router and communication to the central office are active.
- **Service mode**
  Maintenance work can take place without loss of data.

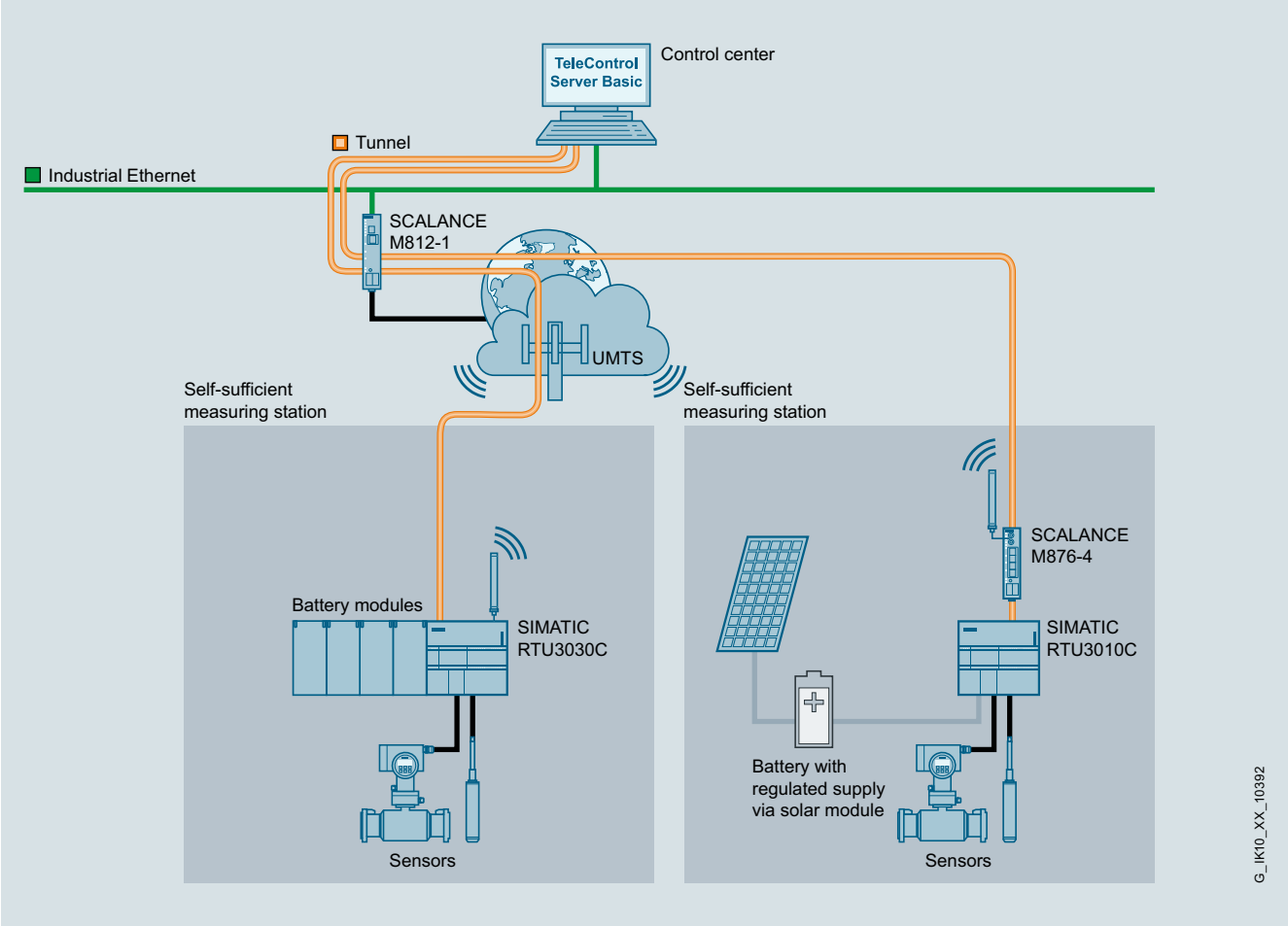

Connection of the SIMATIC RTU3030C to TeleControl Server Basic

Energy-independent mode

The RTU3000C stations can be operated in energy saving mode. Depending on the communication requirements and the connected type of power supply (e.g. battery, solar accumulator), independent operation can thus be guaranteed for many years to come. Power consumption can be determined by the RTU (from hardware level V2) for the diagnosis and prognosis of the battery life. The determined value can be logged and transferred to the control center.

Data backup

Data losses are prevented by the data buffering mechanisms integrated in the product. In the event of a connection failure, time-stamped frames are buffered in the device. When the connection returns, the buffered values are automatically transferred to the control center in the right order.

Data logging

The RTU3000C stations support the backup of process data on SD card. The retentively saved data can be sent cyclically by email and/or FTP or, if necessary, be downloaded directly using web-based management (WBM).

Data point configuration

For data point configuration, the RTUs supports a series of data point types: Digital input, digital output, analog input, counter input. The data points can be configured with little effort using the web pages of the RTU3000C stations. A cyclic and/or event-controller transfer of measured values, setpoints or alarms can thus be implemented in only a few operations.

© Siemens 2020

Data preprocessing

Ready-to-use function and program blocks enable data preprocessing directly in the RTU. The process data can be linked by means of process blocks for basic control jobs.

Up to 44 different types are supported in the following groups:

- Blocks for logical functions (e.g. AND, OR)
- Blocks for time functions (e.g. ON and OFF delay, astronomical clock)
- Blocks for analog value functions (e.g. threshold value monitoring)
- Counter blocks: Featuring the retentivity option, which saves the current count value during restarting and reconfiguration so that it is not lost.
- Analog and digital bit memories for buffering calculation results
- Blocks for messages (text messages, email)
- Block for FTP file transfer
- Relay blocks (latching relay, pulse relay)
- Blocks for silo volume calculation
- Block for rectangular weir overflow calculation
- "Formula" function block for evaluation of mathematical and Boolean expressions of up to four input variables.

Time synchronization

The RTUs support time synchronization and therefore ensure that historical data is given the correct time stamp. The following synchronization mechanisms are available: via NTP, the remote control center, mobile radio and GPS, depending on type of RTU.

Alarms sent by email or text message

Alarm emails or, in the case of RTU3030C and RTU3031C, alarm text messages can be configured for timely communication of station statuses to service and maintenance personnel. When previously defined events (such as threshold violation) occur, application-specific information is sent automatically by email or SMS (directly or via the connected router).

GPS position (RTU30x1C)

The function block checks whether a predefined setpoint position has been reached.

The actual position can also be transferred to the control center as a tag.

Telecontrol communication using standard protocols

For communication with the control center, the RTUs support the DNP3, IEC 60870-5-104 and SINAUT ST7 telecontrol protocols. The RTUs act as a DNP3 station, as an IEC slave or, in the case of SINAUT ST7, as a station connected to an ST7 node station, e.g. TIM 1531 IRC. The RTUs can also be connected to the TeleControl Server Basic (TCSB). TCSB enables a connection to any control center software, e.g. WinCC V7 or via any OPC UA-capable client.

Remote maintenance

The RTU3000C stations provide remote maintenance access via WBM for access from the control center. The RTU3030C or RTU3031C can be woken from sleep mode via text message or a call. When using the "TeleControl Basic" communication protocol, the wake-up text message can be generated in the CMT of TCSB.

Security mechanisms

Access to the RTU3000C stations requires an authorization. Up to 20 different authorized email addresses or phone numbers can be defined in the WBM. Data is sent through an OpenVPN tunnel or a secure tunnel of the TeleControl Server Basic. Email messages can be encrypted (support of STARTTLS). FTP uploads can be performed encrypted via SSL with FTPS.

Diagnostics

The RTU3000C provides comprehensive diagnostic options for a quick and informative analysis of the station status. Basic diagnostic information, such as the status of the power supply, the communication connection and the inputs and outputs are signaled directly to the RTU by LEDs. The current status of the LEDs can also be retrieved through WBM.

Using the web server, comprehensive information can be retrieved, such as facts about the connection history, buffer status, and the transferred measured values.

Furthermore, up to four new, freely definable tag tables are available in which an independent overview of all required tags can be composed to provide a display of all significant process values at a glance. The categorized user administration (Admin and User) ensures that only authorized persons are given access.

Configuration over web server

The integrated web server is accessed locally for diagnostics from a PC or remotely via the mobile wireless interface or Ethernet interface with upstream industrial router. Configuration, firmware update or configuration changes can therefore be performed remotely without additional software thereby saving time and money.

© Siemens 2020

Integration

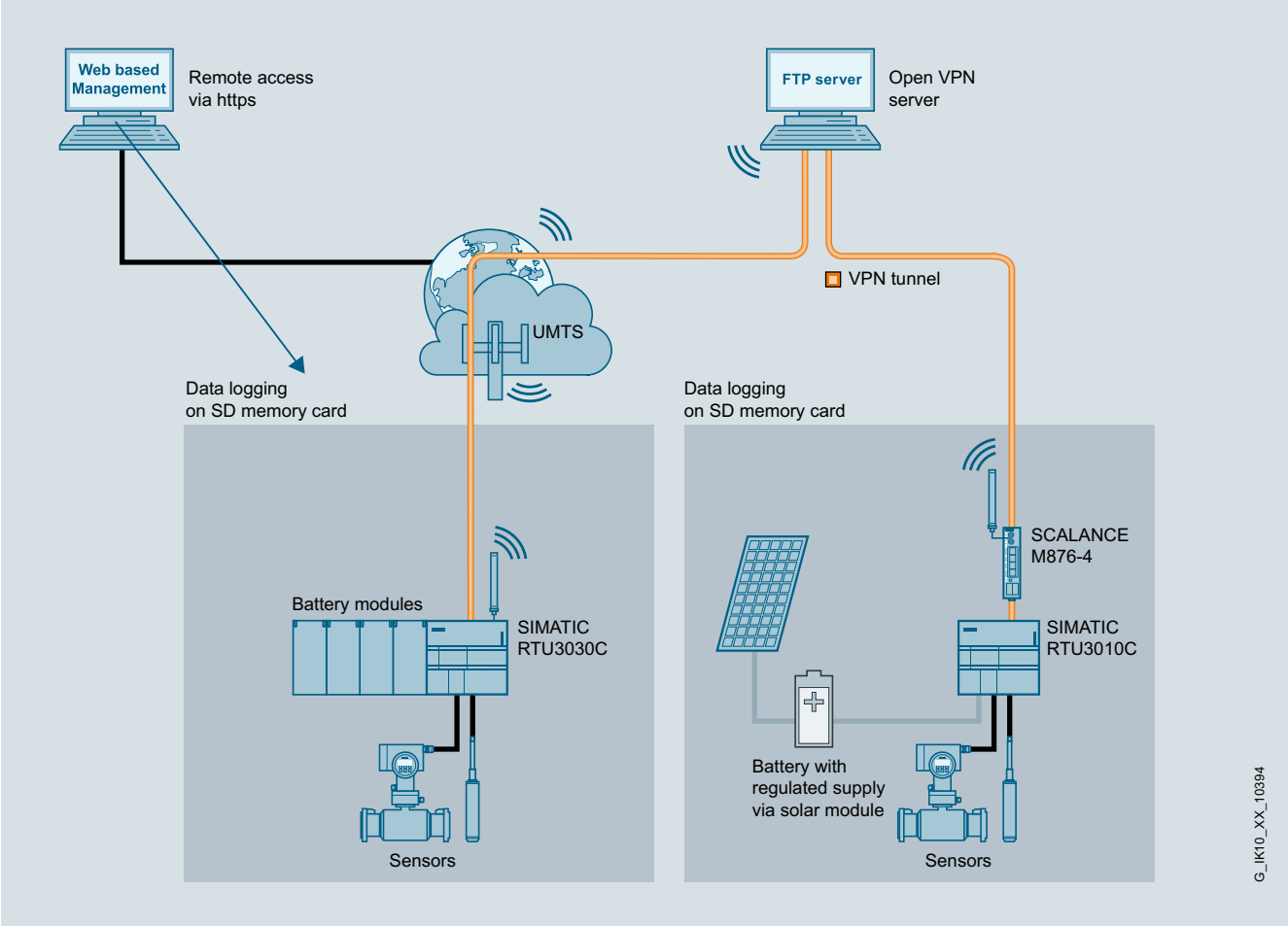

Example of configuration for data logging with RTU3000C

© Siemens 2020

Technical specifications

Article number	6NH3112-0BA00-0XX0	6NH3112-3BA00-0XX0	6NH3112-3BB00-0XX0	6NH3112-4BB00-0XX0
product type designation	RTU3010C	RTU3030C	RTU3031C	RTU3041C
operating mode	Standby mode (Sleep mode), Actualization mode, Communication mode	Standby mode (Sleep mode), Actualization mode, Communication mode	Standby mode (Sleep mode), Actualization mode, Communication mode	Standby mode (Sleep mode), Actualization mode, Communication mode
transfer rate				
transfer rate				
• for Industrial Ethernet	10 ... 100 Mbit/s	10 ... 100 Mbit/s	10 ... 100 Mbit/s	10 ... 100 Mbit/s
• for GPRS transmission				
- with downlink maximum		85.6 kbit/s	85.6 kbit/s	85.6 kbit/s
- with uplink maximum		107 kbit/s	107 kbit/s	107 kbit/s
• with UMTS transmission				
- with downlink maximum		21 Mbit/s	21 Mbit/s	
- with uplink maximum		5.76 Mbit/s	5.76 Mbit/s	
• for LTE-M transmission				
- with downlink maximum				300 kbit/s
- with uplink maximum				375 kbit/s
• for NB-IoT transmission				
- with downlink maximum				21 kbit/s
- with uplink maximum				62.5 kbit/s
interfaces				
number of interfaces acc. to Industrial Ethernet	1	1	1	1
number of electrical connections				
• at the 1st interface acc. to Industrial Ethernet	1	1	1	1
• for external antenna(s)		1	2	2
• for power supply	1	1	1	1
number of slots				
• for SIM cards		1	1	1
• for memory cards	1	1	1	1
type of electrical connection				
• at the 1st interface acc. to Industrial Ethernet	RJ45 port	RJ45 port	RJ45 port	RJ45 port
type of electrical connection				
• for external antenna(s)		SMA socket (50 ohms)	SMA socket (50 ohms)	SMA socket (50 ohms)
• for power supply	5-pole plugable terminal block	5-pole plugable terminal block	5-pole plugable terminal block	5-pole plugable terminal block
type of antenna				
• at port 2 connectable			Active GPS antenna	Active GPS antenna
slot version				
• for SIM card		Mini SIM card, with adapter Micro SIM card also	Mini SIM card, with adapter Micro SIM card also	Mini SIM card, with adapter Micro SIM card also
• of the memory card	SD 1.0, SD 1.1, SDHC, Siemens SMC	SD 1.0, SD 1.1, SDHC, Siemens SMC	SD 1.0, SD 1.1, SDHC, Siemens SMC	SD 1.0, SD 1.1, SDHC, Siemens SMC
storage capacity of the memory card maximum	32 Gibyte	32 Gibyte	32 Gibyte	32 Gibyte
design of the removable storage C-PLUG	No	No	No	No
signal inputs/outputs				
number of electrical connections for digital input signals	8	8	8	8
type of electrical connection for digital input signals	pluggable screw terminal block	pluggable screw terminal block	pluggable screw terminal block	pluggable screw terminal block
digital input version	Suitable for open-drain transistor or switch, 2-wire-technique	Suitable for open-drain transistor or switch, 2-wire-technique	Suitable for open-drain transistor or switch, 2-wire-technique	Suitable for open-drain transistor or switch, 2-wire-technique
number of electrical connections as counter inputs for digital input signals	2	2	2	2
pulse duration at counter input minimum	0.1 ms	0.1 ms	0.1 ms	0.1 ms
pulse frequency at counter input maximum	5 000 Hz	5 000 Hz	5 000 Hz	5 000 Hz

© Siemens 2020

Article number	6NH3112-0BA00-0XX0	6NH3112-3BA00-0XX0	6NH3112-3BB00-0XX0	6NH3112-4BB00-0XX0
product type designation	RTU3010C	RTU3030C	RTU3031C	RTU3041C
number of electrical connections for digital output signals	4	4	8	8
type of electrical connection for digital output signals	pluggable screw terminal block	pluggable screw terminal block	pluggable screw terminal block	pluggable screw terminal block
digital output version	bistable relay, 2-wire-technique	bistable relay, 2-wire-technique	4DO bistable relay, 2-wire technology 4DO solid-state relay	4DO bistable relay, 2-wire technology 4DO solid-state relay
output current at digital output	300 mA; Limiting continuous current	300 mA; Limiting continuous current	300 mA; Limiting continuous current, with solid-state relays 60 mA	300 mA; Limiting continuous current, with solid-state relays 60 mA
number of analog inputs integrated	4	4	4	4
connector type at the analog input	pluggable screw terminal block	pluggable screw terminal block	pluggable screw terminal block	pluggable screw terminal block
type of analog input	2-/3-/4-wire-technique	2-/3-/4-wire-technique	2-/3-/4-wire-technique	2-/3-/4-wire-technique
product function parameterizable analog inputs	Yes; Current 0/4..20mA, Voltage 0..5/10V, Temperature (Pt1000) -80..+140°C	Yes; Current 0/4..20mA, Voltage 0..5/10V, Temperature (Pt1000) -80..+140°C	Yes; Current 0/4..20mA, Voltage 0..5/10V, Temperature (Pt1000) -80..+140°C	Yes; Current 0/4..20mA, Voltage 0..5/10V, Temperature (Pt1000) -80..+140°C
A/D resolution at the analog input	12 bit	12 bit	12 bit	12 bit
wireless technology				
type of mobile wireless service				
• is supported SMS	No	Yes	Yes	Yes
• is supported GPRS		Yes	Yes	Yes
• note	over external, IP-based router	GPRS (Multislot Class 10)	GPRS (Multislot Class 10)	GPRS (Multislot Class 10)
• is supported LTE-M				Yes
• is supported NB-IoT				Yes
type of mobile network is supported				
• GSM		Yes	Yes	Yes
• UMTS		Yes	Yes	
• LTE		No	No	
operating frequency for GSM transmission		850 MHz, 900 MHz, 1800 MHz, 1900 MHz	850 MHz, 900 MHz, 1800 MHz, 1900 MHz	850 MHz, 900 MHz, 1800 MHz, 1900 MHz
operating frequency with UMTS transmission		900 MHz, 2100 MHz	900 MHz, 2100 MHz	
operating frequency for LTE-M transmission				band 1 (2100 MHz), band 2 (1900 MHz), band 3 (1800 MHz), band 4 (1700 MHz), band 5 (850 MHz), band 8 (900 MHz), band 12 (700 MHz), band 13 (700 MHz), band 18 (850 MHz), band 19 (850 MHz), band 20 (800 MHz), band 26 (850 MHz), band 28 (700 MHz)
operating frequency for NB-IoT transmission				band 1 (2100 MHz), band 2 (1900 MHz), band 3 (1800 MHz), band 5 (850 MHz), band 8 (900 MHz), band 12 (700 MHz), band 13 (700 MHz), band 18 (850 MHz), band 19 (850 MHz), band 20 (800 MHz), band 26 (800 MHz), band 28 (700 MHz)
supply voltage, current consumption, power loss				
type of voltage of the supply voltage	DC	DC	DC	DC
supply voltage external at DC	12 ... 24 V	12 ... 24 V	12 ... 24 V	12 ... 24 V
supply voltage external at DC rated value	10.8 ... 28.8 V	10.8 ... 28.8 V	10.8 ... 28.8 V	10.8 ... 28.8 V
type of output voltage for the supply of external devices	DC 12 V or 24 V	DC 12 V or 24 V	DC 12 V or 24 V	DC 12 V or 24 V
supply voltage for GPS antenna maximum			3.8 V; Nominal 3.8 V (3.575 V @5 mA, 3.35 V @ 10 mA, 3.125 V @ 15 mA)	3.8 V; Nominal 3.8 V (3.575 V @5 mA, 3.35 V @ 10 mA, 3.125 V @ 15 mA)
consumed current note	without connected consumers	without connected consumers	without connected consumers	without connected consumers

© Siemens 2020

Article number	6NH3112-0BA00-0XX0	6NH3112-3BA00-0XX0	6NH3112-3BB00-0XX0	6NH3112-4BB00-0XX0
product type designation	RTU3010C	RTU3030C	RTU3031C	RTU3041C
consumed current				
• from external supply voltage at 24 V DC				
- in standby mode typical	14 mA	14 mA	14 mA	14 mA
- in update mode typical	35 mA	35 mA	35 mA	35 mA
- in communication mode typical	55 mA	83 mA	83 mA	83 mA
• with battery operation at 7.2 V DC				
- in standby mode typical	0.28 mA	0.28 mA	0.28 mA	0.28 mA
- in update mode typical	71 mA	71 mA	71 mA	71 mA
- in communication mode typical	125 mA	208 mA	208 mA	208 mA
output current for GPS antenna maximum			15 mA	15 mA
power loss [W]	without connected consumers	without connected consumers	without connected consumers	without connected consumers
power loss [W] with external supply voltage at 24 V DC				
• in standby mode typical	0.34 W	0.34 W	0.34 W	0.34 W
• in update mode typical	0.85 W	0.85 W	0.85 W	0.85 W
• in communication mode typical	1.25 W	2 W	2 W	2 W
power loss [W] with battery operation at 7.2 V DC				
• in standby mode typical	0.002 W	0.002 W	0.002 W	0.002 W
• in update mode typical	0.51 W	0.51 W	0.51 W	0.51 W
• in communication mode typical	0.9 W	1.5 W	1.5 W	1.5 W
ambient conditions				
ambient temperature				
• for vertical installation during operation	-40 ... +60 °C	-40 ... +60 °C	-40 ... +60 °C	-40 ... +60 °C
• for horizontally arranged busbars during operation	-40 ... +70 °C	-40 ... +70 °C	-40 ... +70 °C	-40 ... +70 °C
• during storage	-40 ... +70 °C	-40 ... +70 °C	-40 ... +70 °C	-40 ... +70 °C
• during transport	-40 ... +70 °C	-40 ... +70 °C	-40 ... +70 °C	-40 ... +70 °C
relative humidity				
• at 30 °C without condensation during operation maximum	95 %	95 %	95 %	95 %
protection class IP	IP20; IP68 with protective housing (see accessories)	IP20; IP68 with protective housing (see accessories)	IP20; IP68 with protective housing (see accessories)	IP20; IP68 with protective housing (see accessories)
design, dimensions and weights				
module format	Compact module	Compact module	Compact module	Compact module
width	130 mm	130 mm	130 mm	130 mm
height	100 mm	100 mm	100 mm	100 mm
depth	75 mm	75 mm	75 mm	75 mm
net weight	0.34 kg	0.37 kg	0.37 kg	0.37 kg
mounting type				
• 35 mm DIN rail mounting	Yes	Yes	Yes	Yes
• wall mounting	Yes	Yes	Yes	Yes
product features, product functions, product components general				
product function				
• DynDNS client		Yes	Yes	Yes
• no-ip.com client		Yes	Yes	Yes
performance data				
number of users email addresses definable maximum	20			
number of users/telephone numbers/email addresses definable maximum		20	20	20
number of user groups definable maximum	10	10	10	10
number of program block types	42	43	44	44
number of configurable program blocks	48	48	48	48
number of digital bit memories maximum	40	40	40	40
number of analog bit memories maximum	24	24	24	24

© Siemens 2020

Article number	6NH3112-0BA00-0XX0	6NH3112-3BA00-0XX0	6NH3112-3BB00-0XX0	6NH3112-4BB00-0XX0
product type designation	RTU3010C	RTU3030C	RTU3031C	RTU3041C
performance data IT functions				
number of possible connections				
• as client by means of FTP maximum	1	1	1	1
number of entries in the FTP buffer maximum	12	12	12	12
number of possible connections				
• as server by means of HTTP maximum	2	2	2	2
• as server by means of HTTPS maximum	2; http and https can be combined (max. number of 2 connections cannot be exceeded).	2; http and https can be combined (max. number of 2 connections cannot be exceeded). Max. one connection via https is possible on the mobile wireless interface.	2; http and https can be combined (max. number of 2 connections cannot be exceeded). Max. one connection via https is possible on the mobile wireless interface.	2; http and https can be combined (max. number of 2 connections cannot be exceeded). Max. one connection via https is possible on the mobile wireless interface.
• as e-mail client maximum	1	1	1	1
Number of free texts for e-mails and SMS maximum	20	20	20	20
number of characters per free text for emails or SMS maximum	160	160	160	160
number of entries in the e-mail buffer maximum	12	12	12	12
performance data telecontrol				
suitability for use				
• node station	No	No	No	No
• substation	Yes	Yes	Yes	Yes
• TIM control center	No	No	No	No
control center connection	IEC 60870-5-104, DNP3-capable control stations, SINAUT ST7cc/sc, TeleControl Server Basic	IEC 60870-5-104, DNP3-capable control stations, SINAUT ST7cc/sc, TeleControl Server Basic	IEC 60870-5-104, DNP3-capable control stations, SINAUT ST7cc/sc, TeleControl Server Basic	IEC 60870-5-104, DNP3-capable control stations, SINAUT ST7cc/sc, TeleControl Server Basic
• by means of a permanent connection	supported	supported	supported	supported
• by means of demand-oriented connection	supported	supported	supported	supported
protocol is supported				
• DNP3	Yes	Yes	Yes	Yes
• IEC 60870-5	Yes	Yes	Yes	Yes
• SINAUT ST1 protocol			No	No
• SINAUT ST7 protocol	Yes	Yes	Yes	Yes
product function data buffering if connection is aborted	Yes	Yes	Yes	Yes
amount of data as user data per station in telecontrol mode maximum	256 Kibyte	256 Kibyte	256 Kibyte	256 Kibyte
product feature buffered message frame memory	Yes	Yes	Yes	Yes
performance data teleservice				
diagnostics function online diagnostics with SIMATIC STEP 7	No	No	No	No
product function				
• program download with SIMATIC STEP 7	No	No	No	No
• remote firmware update	Yes	Yes	Yes	Yes
• remote configuration	Yes	Yes	Yes	Yes
product functions management, configuration, engineering				
configuration software				
• required	No, configuration by using the integrated webserver	No, configuration by using the integrated webserver	No, configuration by using the integrated webserver	No, configuration by using the integrated webserver
product function gateway for SIMATIC PDM				
• with Modbus TCP	Yes	Yes	Yes	Yes
• with HART IP protocol	Yes	Yes	Yes	Yes

© Siemens 2020

Article number	6NH3112-0BA00-0XX0	6NH3112-3BA00-0XX0	6NH3112-3BB00-0XX0	6NH3112-4BB00-0XX0
product type designation	RTU3010C	RTU3030C	RTU3031C	RTU3041C
product functions diagnostics				
product function web-based diagnostics	Yes	Yes	Yes	Yes
product functions security				
operating mode Virtual Private Network (VPN)	Yes	Yes	Yes	Yes
product function with VPN connection	OpenVPN	OpenVPN	OpenVPN	OpenVPN
type of authentication procedure with VPN connection	certificate based	certificate based	certificate based	certificate based
type of authentication with Virtual Private Network PSK	No	No	No	No
type of hashing algorithms with VPN connection	SHA-256	SHA-256	SHA-256	SHA-256
number of possible connections with VPN connection	2; one simultaneous productive connection only	2; one simultaneous productive connection only	2; one simultaneous productive connection only	2; one simultaneous productive connection only
product function				
• password protection for Web applications	Yes	Yes	Yes	Yes
• password protection for teleservice access	Yes	Yes	Yes	Yes
• password protection for VPN	Yes	Yes	Yes	Yes
• encrypted data transmission	Yes	Yes	Yes	Yes
• switch-off of non-required services	Yes	Yes	Yes	Yes
• SysLog	Yes	Yes	Yes	Yes
product functions time				
protocol is supported				
• NTP	Yes	Yes	Yes	Yes
product component hardware real-time clock	Yes	Yes	Yes	Yes
product feature hardware real-time clock w. battery backup	Yes	Yes	Yes	Yes
accuracy of the hardware real-time clock per day maximum	1.8 s	1.8 s	1.8 s	1.8 s
time synchronization				
• from NTP-server	Yes	Yes	Yes	Yes
• from GPS-signal			Yes	Yes
• from control center	Yes	Yes	Yes	Yes
• from mobile network provider		Yes	Yes	Yes
• PC	Yes	Yes	Yes	Yes
• manual setting	Yes	Yes	Yes	Yes
product functions position detection				
product function				
• position detection with GPS			Yes	Yes
• pass on position data			Yes	Yes

© Siemens 2020

Selection and ordering data

	Article No.
SIMATIC RTU3010C [1)] Compact low-power RTU; battery or solar-powered; connection of external power supply 10.8 V to 28.8 V DC; connection of external modems; connection to TeleControl Server Basic, DNP3, IEC 60870-5-104 or SINAUT ST7 protocols; onboard I/Os: 8 DI, 4 DQ, 4 AI; FTP client; configuration/diagnostics via web server; time synchronization; email; SD card slot.	**6NH3112-0BA00-0XX0**
SIMATIC RTU3030C [1)] Compact low-power RTU; battery or solar-powered; connection of external power supply 10.8 V to 28.8 V DC; integrated UMTS modem; connection to TeleControl Server Basic, DNP3, IEC 60870-5-104 or SINAUT ST7 protocols, onboard I/Os: 8 DI, 4 DQ, 4 AI; FTP client; Ethernet port; configuration / diagnostics via web server, time synchronization, text message, email, SD card slot, note country approvals.	**6NH3112-3BA00-0XX0**
SIMATIC RTU3031C [1)] Compact low-power RTU; battery or solar-powered; connection of external power supply 10.8 V to 28.8 V DC; integrated UMTS modem; GPS; connection to TeleControl Server Basic, DNP3, IEC 60870-5-104 or SINAUT ST7 protocols, onboard I/Os: 8 DI, 8 DQ, 4 AI; FTP client; Ethernet port, configuration / diagnostics via web server, time synchronization, text message, email, SD card slot, note country approvals.	**6NH3112-3BB00-0XX0**
SIMATIC RTU3041C [1)] Compact low-power RTU; battery or solar-powered; connection of external power supply 10.8 V to 28.8 V DC; integrated modem for LTE-M/NB-IoT; GPS; connection to TeleControl Server Basic, DNP3, IEC 60870-5-104 or SINAUT ST7 protocols, onboard I/Os: 8 DI, 8 DQ, 4 AI; FTP client; Ethernet port, configuration / diagnostics via web server, time synchronization, text message, email, SD card slot, note country approvals.	**6NH3112-4BB00-0XX0**
Extension Board HART/RS 485 Extension board for low-power RTU3000C family; connection of 8 Modbus RTU slaves or of 8 HART devices in multidrop mode (as of firmware V3.1 of the RTU3000C).	**6NH3112-3BA00-6XX1**
Accessories	
Battery case for SIMATIC RTU3000C Battery case for accommodating two D cell batteries; suitable for SIMATIC RTU3000C; batteries must be procured externally and are not included in the scope of supply Please observe information on the battery type in the manual!	**6NH3112-3BA00-1XX2**
Battery expansion case for SIMATIC RTU3000C Battery expansion case for accommodating two D cell batteries; suitable for SIMATIC RTU3000C; batteries must be procured externally and are not included in the scope of supply Please observe information on the battery type in the manual!	**6NH3112-3BA00- 1XX6**
Enclosure in IP68 degree of protection For SIMATIC RTU3000C Note: Cable glands and sealing plugs must be ordered separately in the necessary quantity	
• **Aluminum enclosure** Temperature range -40 to +80 °C	**6NH3112-3BA00-1XX3**
• **Stainless steel enclosure** Temperature range -60 to +135 °C	**6NH3112-3BA00-1XX1**

	Article No.
M16 cable gland For IP68 enclosure, temperature range -40 to +100 °C, nickel-plated brass	**6NH3112-3BA00-1XX4**
Sealing plugs M16 For IP68 enclosure, temperature range -40 to +100 °C, nickel-plated brass	**6NH3112-3BA00-1XX5**
SIMATIC Memory Card	
4 MB	**6ES7954-8LC03-0AA0**
12 MB	**6ES7954-8LE03-0AA0**
24 MB	**6ES7954-8LF03-0AA0**
256 MB	**6ES7954-8LL03-0AA0**
2 GB	**6ES7954-8LP02-0AA0**
ANT896-4MA 2G/3G/4G antenna Omnidirectional antenna for GSM (2G), UMTS (3G) and LTE (4G) networks; omnidirectional characteristic; can be rotated radially with additional joint; with SMA connector for direct mounting on the device; antenna gain 2dBi; IP54	**6GK5896-4MA00-0AA3**
ANT896-4ME 2G/3G/4G antenna Omnidirectional antenna for GSM (2G), UMTS (3G) and LTE (4G) networks; omnidirectional characteristic; with N-female connector for remote installation indoors and outdoors; antenna gain 3dBi; IP66	**6GK5896-4ME00-0AA0**
ANT794-4MR antenna Omnidirectional antenna for GSM (2G), UMTS (3G) and LTE (4G) networks; omnidirectional, weatherproof for indoor and outdoor use; 5 m connecting cable with fixed connection to the antenna; SMA connector; including mounting bracket, screws, wall plugs	**6NH9860-1AA00**
GPS antenna ANT895-6ML ANT895-6ML GPS antenna with integrated signal amplifier, including 0.3 m connecting cable and N-female connector; 3 dBi IP67 (-40...+85 °C) mounting with magnet or screw fixing; note country approvals; compact instructions on paper in English/German; scope of supply: 1x ANT 895-6ML	**6GK5895-6ML00-0AA0**
SIMATIC NET Antenna Connection Cable N/SMA male/male Flexible antenna connecting cable for connection of antenna and SCALANCE M	
• 0.3 m	**6XV1875-5LE30**
• 1 m	**6XV1875-5LH10**
• 2 m	**6XV1875-5LH20**
• 5 m	**6XV1875-5LH50**
SIMATIC NET antenna N-Connect male/male flexible connection cable Flexible cable for connecting an RCoax cable or antenna to a SCALANCE W-700 access point with N-Connect connections; pre-assembled with two N-Connect male connections	
• 1 m	**6XV1875-5AH10**
• 2 m	**6XV1875-5AH20**
• 5 m	**6XV1875-5AH50**
• 10 m	**6XV1875-5AN10**
SIMATIC NET N-Connect/ N-Connect female/female panel feedthrough Cabinet feedthrough for wall thicknesses up to 4.5 mm, two N-Connect female connections	**6GK5798-2PP00-2AA6**
LP798-1N lightning protector Lightning protector with N/N female/female connection, IP67 (-40 to +85 °C) Frequency range: 0 ... 6 GHz	**6GK5798-2LP00-2AA6**

© Siemens 2020

	Article No.
SITOP PSU100C single-phase, 12 V DC/2 A Stabilized power supply Input: 100 … 230 V AC Output: 12 V DC/2 A	**6EP1321-5BA00**
SITOP PSU100C single-phase, 12 V DC/6.5 A Stabilized power supply Input: 100 … 230 V AC Output: 12 V DC/6.5 A	**6EP1322-5BA10**
SITOP PSU100C single-phase, 24 V DC/1.3 A Stabilized power supply Input: 120 … 230 V AC Output: 24 V DC/1.3 A	**6EP1331-5BA10**
SITOP PSU100C single-phase, 24 V DC/2.5 A Stabilized power supply Input: 100 … 230 V AC Output: 24 V DC/2.5 A	**6EP1332-5BA00**
SITOP PSU100C single-phase, 24 V DC/3.7 A Stabilized power supply Input: 100 … 230 V AC (110 ... 300 V AC) Output: 24 V DC/3.7 A Limited output power NEC class 2	**6EP1332-5BA20**

[1] Please note country approvals under:
http://www.siemens.de/mobilfunkzulassungen

More information

Technical requirements/compatibility

The following versions of the software are necessary for connection of RTU3000C to a control center with Telecontrol Server Basic: RTU3030C as of TCSB V3.0. RTU3010C as of TCSB V3.1. RTU3031C as of TCSB V3.1. + update 1 plus hardware support package (HSP). RTU3041C as of TCSB V3.1. + update 3.

Corresponding suitable industrial routers (e.g. SCALANCE M) for the connection to the control center via the Ethernet interface of the RTU3000C can be found under Remote Networks - IP-based modems and routers.

© Siemens 2020

Overview

IE/PB Link HA and IE/PB Link PN IO

IE/PB LINKs are gateways for connecting the two network types, Industrial Ethernet and PROFIBUS, i.e. they enable access to all PROFIBUS nodes connected to the lower-level PROFIBUS network.

Product versions
Two versions offered as gateways for Industrial Ethernet and PROFIBUS:

- IE/PB LINK PN IO
  Gateway with PROFINET IO functionality, S7 routing and data record routing for standard ambient conditions
- IE/PB LINK HA
  Gateway optimized for use in the process industry due to the possibility of deployment in harsh ambient conditions and the connection of PROFIBUS field devices to a redundant AS as PROFINET IO controller

Both product versions can be used in two operating modes:

Standard mode enables, for example, loading of programs and configuration data via PG/OP communication, data record routing for configuration and diagnostics of field devices with the SIMATIC PDM tool, S7 routing e.g. for cross-network loading of SIMATIC PLCs on PROFIBUS.

When operated as a PROFINET IO proxy, from the perspective of the PN IO controller, all PROFIBUS DP slaves connected after the IE/PB LINK are treated as PN IO devices according to the PROFINET standard, i.e. the IE/PB LINK is the proxy of the connected PROFIBUS DP slaves.

Both IE/PB LINK versions offer the possibility to use different transmission media by employing BusAdapters.

Benefits

- Protection of investment due to simple connection of PROFIBUS DP slaves to PROFINET IO controller. This enables a step-by-step transition to modern PROFINET networks
- Independence from individual vendors through support of the PROFINET standard for distributed field devices
- Flexible use due to different connection system and hardware; copper (RJ45, FC) and fiber-optic cables (SCRJ for POF/PCF, LC for glass fiber-optic)
- Also enables use in plants with PROFIsafe applications
- Worldwide access to data of the PROFIBUS stations via Industrial Ethernet and Internet for vertical integration
- Access to process data from all enterprise levels
- Loading of STEP 7 programs from a central location
- Easy engineering and extensive diagnostics options due to optimum TIA integration

IE/PB LINK HA also offers:

- High availability through redundancy mechanisms in PROFINET IO through use as S2 device
- Interruption-free plant operation in the redundant system, even when configuration changes are required during operation, through support for Configuration in Run (H-CiR)
- Easy migration of large PROFIBUS networks to PROFINET by supporting up to 125 PROFIBUS DP slaves
- Reliable operation even in harsh ambient conditions

Application

As an autonomous component, both IE/PB LINK versions provide a seamless transition between Industrial Ethernet and PROFIBUS.

Using the IE/PB LINK as a proxy, you can continue to use existing PROFIBUS nodes (even with PROFIsafe functionality V2.0 or higher) and integrate them into a PROFINET application.

IE/PB LINK HA additionally offers connection to a redundant PROFINET IO automation system and the functionality Configuration in Run (H-CIR).

Both IE/PB LINK versions also offers cross-network PG/OP communication by means of S7 routing. Cross-network access to data of S7 stations for visualization with S7 OPC server and S7 routing; via the IE/PB LINK, access is possible from the Industrial Ethernet (for example for HMI applications with OPC client interface) to data of the S7 stations on the PROFIBUS using the S7 OPC server.

In addition, data record routing (PROFIBUS DP) is supported. This means it is possible, for example, to use SIMATIC PDM (on the PC) on Industrial Ethernet to configure and perform diagnostics for a PROFIBUS field device via the IE/PB LINK. IE/PB LINK HA also designed for use in harsh ambient conditions.

Design

Both IE/PB LINK versions provide all the advantages of the SIMATIC ET 200SP design:

- Compact design;
  the front of the rugged plastic enclosure features:
  - Two RJ45 ports for connecting to Industrial Ethernet; the connection is made via the IE FC RJ45 plug 90 with 90° cable outlet or via a standard patch cable
  - A 9-pin sub-D socket for connection to PROFIBUS
  - A 4-pin terminal strip for connecting the external redundant supply voltage of 24 V DC (two infeeds)
  - Diagnostics LEDs
- Optional connection possibility for Industrial Ethernet via BusAdapter (BA) of the SIMATIC ET 200SP system at the front
- Easy installation on standard mounting rails
- Can be operated without a fan
- Fast device replacement in the event of a fault by using the optional C-PLUG removable data storage medium (not included in scope of supply)

© Siemens 2020

Function

Compact gateway between PROFINET and PROFIBUS

- Connection to Industrial Ethernet via integrated 2-port real-time switch with 100 Mbps full duplex connection with auto-sensing for automatic switchover
- In case of replacement part: Connection to Industrial Ethernet also with 10 Mbps half duplex
- Connection to PROFIBUS with 9.6 Kbps to 12 Mbps
- Support for MRP (Media Redundancy Protocol) using integrated Real Time Switch
- SIMATIC ET 200SP design: Use of the BusAdapter (BA) of the SIMATIC ET 200SP system for freely selecting the connection system and physical characteristics on the PROFINET side

IE/PB LINK HA also offers

- Use in ambient temperatures from -40°C to +70°C
- Conformal coating
- Support for enhanced interference immunity according to NAMUR recommendation NE21

Operation as PROFINET IO proxy

- Connection of PROFIBUS DP slaves to PROFINET IO controller with real-time property, according to PROFINET standard. From the viewpoint of the controller, all DP slaves are treated like devices with PROFINET interface, i.e. the IE/PB LINK PN IO is their proxy

IE/PB LINK HA also offers

- Connection of PROFIBUS DP slaves to a redundant SIMATIC S7 controller (S7-400H) as PROFINET S2 device including support for Configuration in Run (H-CiR)
- Connection of up to 125 PROFIBUS DP slaves on the single controller and up to 64 PROFIBUS DP slaves in operation as S2 device on the redundant controller

Additional functionality for vertical integration (standard operation or operation as PROFINET IO proxy)

- S7 routing
  - Permits cross-network PG communication, in other words, all S7 stations on Industrial Ethernet or PROFIBUS can be programmed remotely using the programming device.
  - Access can take place to visualization data of S7 stations on the PROFIBUS from HMI stations on Industrial Ethernet.
- Data record routing (PROFIBUS DP)
  - Using this option, the IE/PB LINK PN IO can be used as a router for data records that are forwarded to field devices (DP slaves). SIMATIC PDM (Process Device Manager) is a tool that creates data records of this type for parameterizing and diagnosing field devices.
  - The configuration of the IE/PB LINK PN IO for standard mode is possible via SINEC PNI (Primary Setup Tool Network Initialization) as well as STEP 7 / TIA Portal

The additional functions for vertical integration can also be used in an existing PROFIBUS application without PROFINET IO for connection to a higher-level Industrial Ethernet.

In this case, the IE/PB Link PN IO is used as an additional DP Master Class 2 on a PROFIBUS segment for coupling to Industrial Ethernet and offers the above functions.

Media redundancy (MRP):

- IE/PB LINK supports the media redundancy protocol MRP as an MRP client within a PROFINET network with a ring topology

Diagnostics

Extensive diagnostic options are available via STEP 7 or SNMP, including:

- Diagnostics of the assigned PROFIBUS field devices; using the IE/PB LINK as a proxy, the connected DP slaves can be diagnosed in the same manner as PROFINET IO devices (even in the user program of the PROFINET IO controller)
- General diagnostics and statistics functions
- Connection diagnostics
- Diagnostic buffer
- Integration into network management systems through the support of SNMP V1 MIB-II

Configuration

- With STEP 7 V5.x or STEP 7 Professional in the TIA Portal, all the necessary parameters, e.g. the addresses and all necessary routing information, are generated automatically
- The configuration data for PROFINET IO created with STEP 7 is saved on the IO controller. Attention must however be paid to the memory capacity.
- IE/PB LINK can be swapped in the event of failure without a programming device because the relevant configuration data is saved on the PN IO controller or on the C-PLUG.
- If the IE/PB LINK PN IO is only to be used as a gateway and not as a PROFINET IO device, the IE/PB LINK behaves like a simple network component. Accordingly, the IP and PROFIBUS parameters and the network settings can also be assigned with a STEP 7 Professional (TIA Portal) without a license
- The IP and PROFIBUS parameters as well as the network settings can also be assigned using SINEC PNI
- The initialization data for the Industrial Ethernet interface is backed up on the C-PLUG (configuration plug) removable data storage medium
- Use in networks that support an exchange of devices without programming devices on the basis of the Link Layer Discovery Protocol (LLDP)

© Siemens 2020

Integration

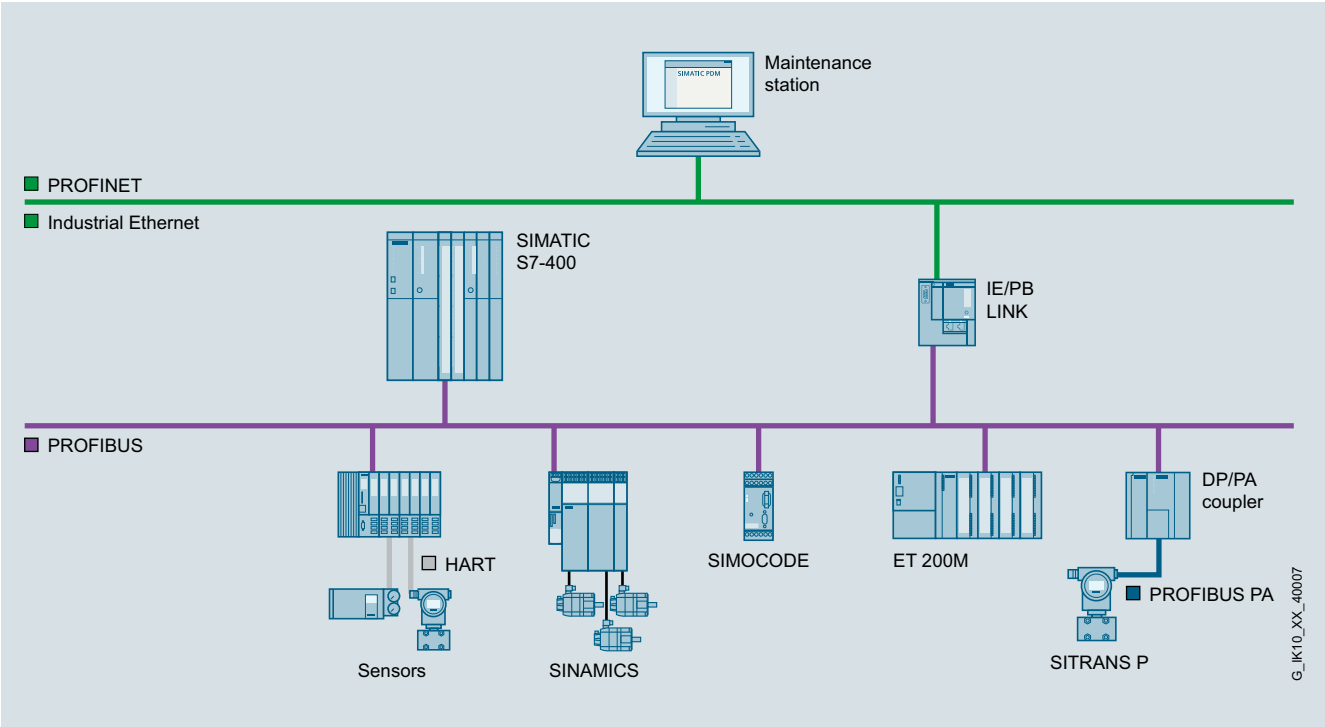

IE/PB LINK: Gateway in standard mode

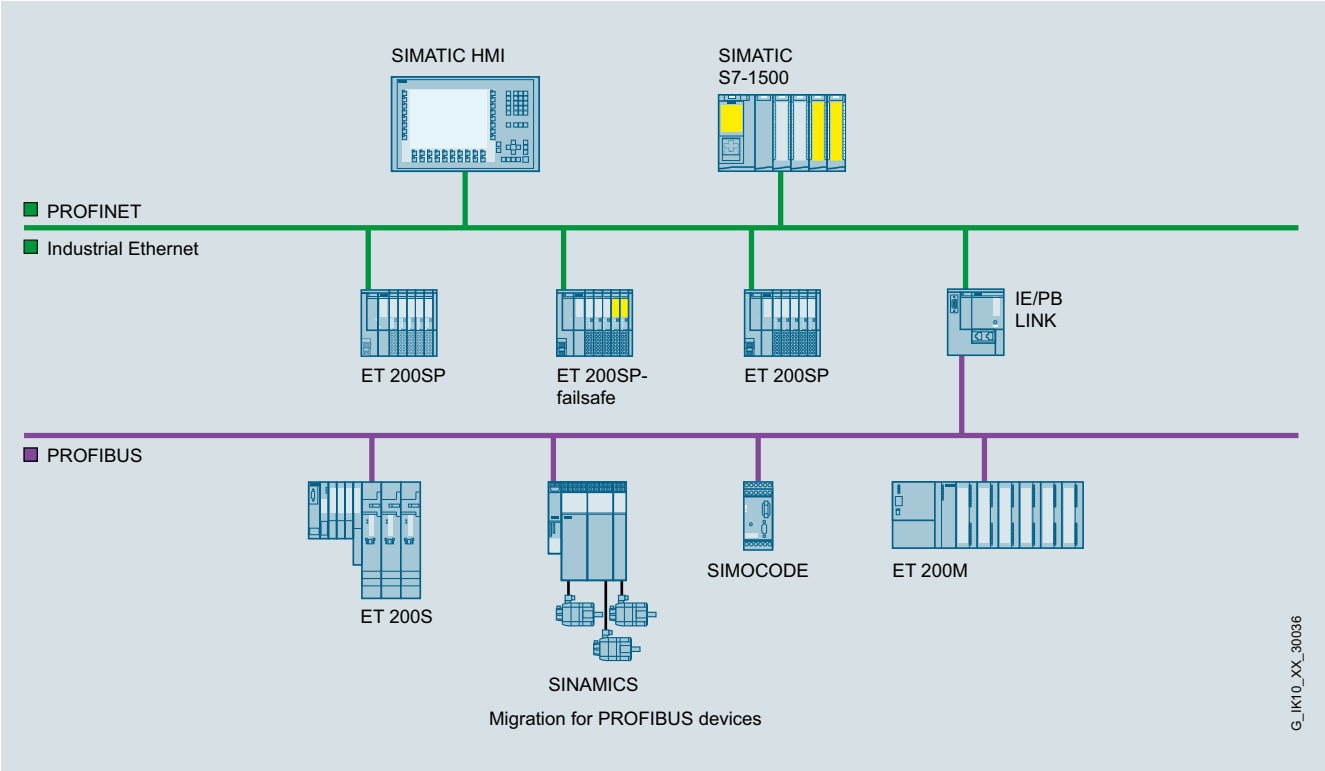

IE/PB LINK: PROFINET IO proxy

© Siemens 2020

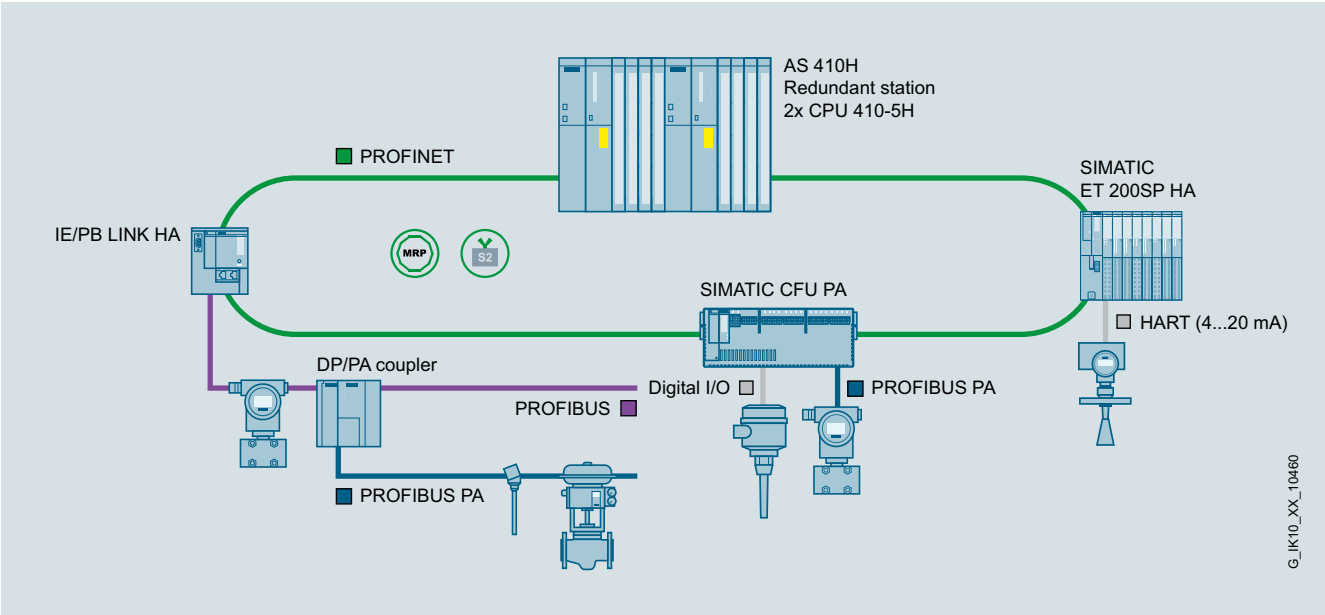

IE/PB LINK HA: System redundancy as S2 device in the MRP ring

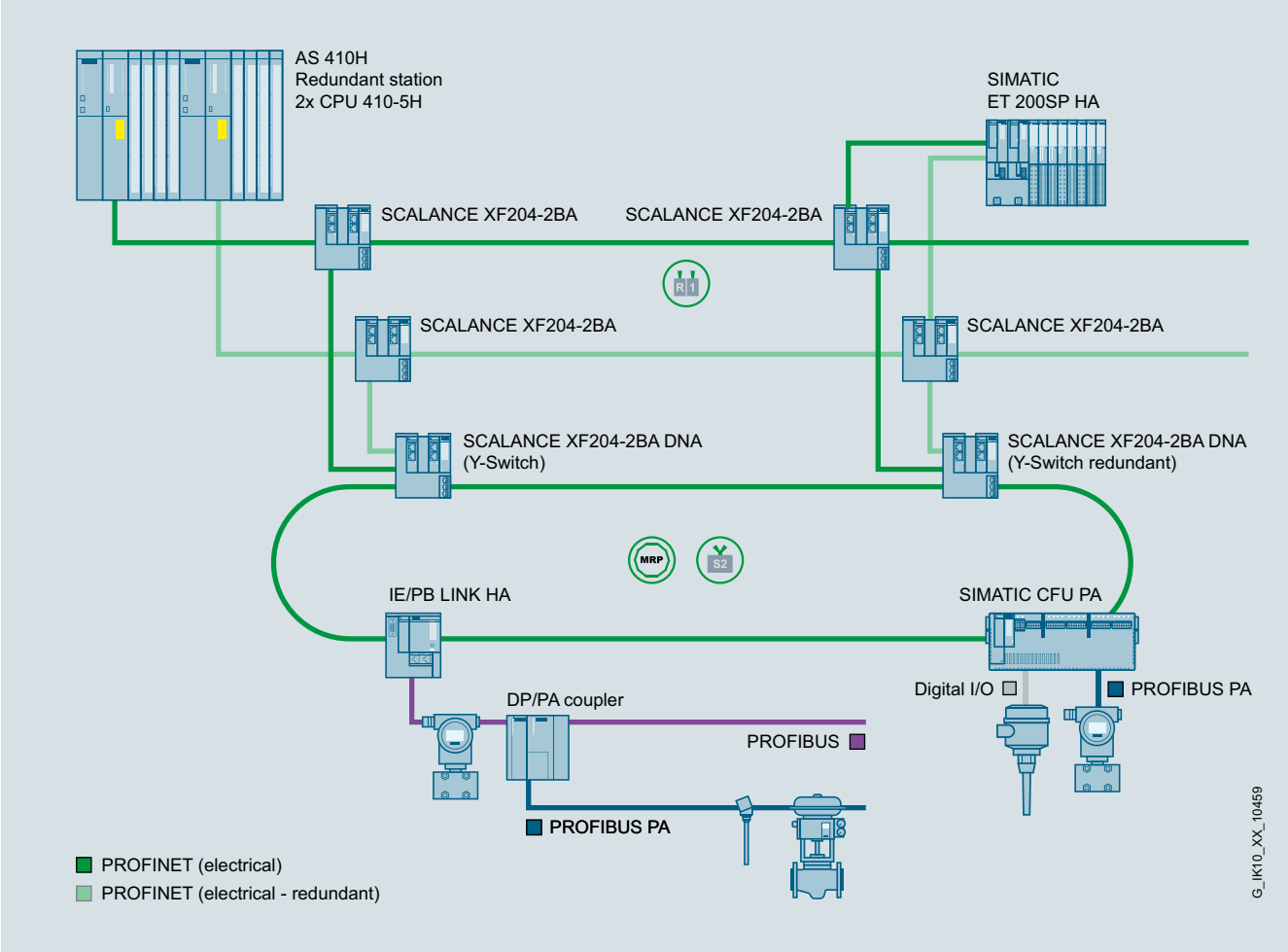

IE/PB LINK HA: PROFINET system redundancy on R1 system

© Siemens 2020

Technical specifications

Article number	6GK1411-5AB10	6GK1411-5BB00
product type designation	IE/PB LINK PN IO	IE/PB LINK HA
suitability for operation	Gateway between Industrial Ethernet and PROFIBUS	Gateway between Industrial Ethernet and PROFIBUS
transfer rate		
transfer rate		
• at the 1st interface	10 ... 100 Mbit/s	10 ... 100 Mbit/s
• at the 2nd interface	9.6 kbit/s ... 12 Mbit/s	9.6 kbit/s ... 12 Mbit/s
interfaces		
number of electrical connections		
• at the 1st interface acc. to Industrial Ethernet	2	2
• at the 2nd interface acc. to PROFIBUS	1	1
• for power supply	2	2
type of electrical connection		
• for power supply	4-pole terminal block	4-pole terminal block
design of the removable storage C-PLUG	Yes	Yes
supply voltage, current consumption, power loss		
type of voltage of the supply voltage	DC	DC
supply voltage external at DC rated value	24 V	24 V
relative positive tolerance at DC at 24 V	20 %	20 %
relative negative tolerance at DC at 24 V	15 %	15 %
consumed current		
• from external supply voltage at DC at 24 V typical	0.2 A	0.2 A
• from external supply voltage at DC at 24 V maximum	0.3 A	0.3 A
power loss [W]	4.8 W; Typical	4.8 W; Typical
ambient conditions		
ambient temperature		
• for vertical installation during operation	0 ... 40 °C	-40 ... +50 °C
• for horizontally arranged busbars during operation	0 ... 60 °C	-40 ... +70 °C
• during storage	-40 ... +70 °C	-40 ... +70 °C
• during transport	-40 ... +70 °C	-40 ... +70 °C
relative humidity		
• at 25 °C without condensation during operation maximum	95 %	95 %
protection class IP	IP20	IP20
design, dimensions and weights		
module format	ET 200SP design	ET 200SP design
width	100 mm	100 mm
height	117 mm	117 mm
depth	74 mm	74 mm
net weight	0.6 kg	0.6 kg
product feature conformal coating		Yes
mounting type		
• 35 mm DIN rail mounting	Yes	Yes
performance data PROFIBUS DP		
service as DP master		
• DPV0	Yes	Yes
• DPV1	Yes	Yes
number of DP slaves		
• at the 2nd interface as DP master maximum	64	125
amount of data		
• of the address area of the inputs as DP master total	2 048 byte	4 096 byte
• of the address area of the outputs as DP master total	2 048 byte	4 096 byte
• of the address area of the inputs per DP slave	244 byte	244 byte
• of the address area of the outputs per DP slave	244 byte	244 byte

© Siemens 2020

IE/PB Link

Article number	6GK1411-5AB10	6GK1411-5BB00
product type designation	IE/PB LINK PN IO	IE/PB LINK HA
performance data S7 communication		
number of possible connections for S7 communication		
• maximum	32	32
performance data multi-protocol mode		
number of active connections with multi-protocol mode	48	48
performance data PROFINET communication as PN IO device		
product function PROFINET IO device	Yes	Yes
product functions management, configuration, engineering		
product function MIB support	Yes	Yes
protocol is supported		
• SNMP v1	Yes	Yes
• DCP	Yes	Yes
• LLDP	Yes	Yes
identification & maintenance function		
• I&M0 - device-specific information	Yes	Yes
• I&M1 – higher-level designation/location designation	Yes	Yes
• I&M2 - installation date	Yes	Yes
• I&M3 - comment	Yes	Yes
product functions routing		
service as PROFIBUS dataset routing	Yes	Yes
number of possible connections with dataset routing maximum	32	32
product functions redundancy		
product function		
• ring redundancy	Yes	Yes
product function		
• of the PROFINET IO device is supported PROFINET system redundancy	No	Yes
protocol is supported Media Redundancy Protocol (MRP)	Yes	Yes
product functions time		
product function pass on time synchronization	Yes	Yes
protocol is supported		
• NTP	Yes	Yes
• SIMATIC time synchronization (SIMATIC Time)	Yes	Yes
accessories		
accessories	Optional: C-PLUG, BusAdapter of the ET 200SP system	Optional: C-PLUG, BusAdapter of the ET 200SP system

© Siemens 2020

Selection and ordering data

	Article No.
IE/PB Link PN IO Gateway between Industrial Ethernet and PROFIBUS, PROFINET IO proxy with real-time communication, time synchronization via SIMATIC protocol, NTP, SNMP V1, LLDP, S7 routing, data record routing, connection of up to 64 S7/DPV0/DPV1 slaves, support for DP/PA LINK and DP/FF LINK, 10/100 Mbps Fast Ethernet, MRP, 9.6 Kbps up to 12 Mbps PROFIBUS, firmware download via configuration tool, redundant power supply, firmware version V4.0 Gateway	**6GK1411-5AB10**
IE/PB LINK HA Gateway between Industrial Ethernet and PROFIBUS, PROFINET IO proxy with real-time communication, system redundancy S2, H-CiR, time synchronization via SIMATIC protocol, NTP, SNMP V1, LLDP, S7 routing, data record routing, connection of up to 125 S7/DPV0/DPV1 slaves, support for DP/PA LINK and DP/FF LINK, 10/100 Mbps Fast Ethernet, MRP, 9.6 Kbps up to 12 Mbps PROFIBUS, firmware download via configuration tool, redundant power supply, conformal coating, extended temperature range -40 ?C to 70 ?C	**6GK1411-5BB00**

	Article No.
Accessories	
C-PLUG Removable data storage medium for easy device replacement if a fault occurs. For storing configuration and application data. Can be used in the following SIMATIC NET products with C-PLUG slot: SCALANCE XC-200, XP-200, XM-400, XR-500, M-800, W-700, SC-600 and S615	**6GK1900-0AB10**
BusAdapter BusAdapters offer a free selection of connection system and hardware for the PROFINET interface. Alternatively, they can be used for the Industrial Ethernet interface on the device. The following BusAdapter versions are supported by the IE/PB LINK PN IO:	
Versions with copper connection (RJ45, FastConnect (FC))	
• BA 2xRJ45 with 2 RJ45 connections	**6ES7193-6AR00-0AA0**
• BA 2xFC with 2 FastConnect connections	**6ES7193-6AF00-0AA0**
• BA 2xRJ45 HA with 2 RJ45 sockets	**6DL1193-6AR00-0AA0**
• BA 2xFC HA with 2x FastConnect connection	**6DL1193-6AF00-0AA0**
• SIPLUS BusAdapter BA 2xRJ45 with 2 RJ45 connections	**6AG1193-6AR00-7AA0**
• SIPLUS BusAdapter BA 2xFC with 2 FastConnect connections	**6AG1193-6AF00-7AA0**
• BA 2xRJ45 VD HA BusAdapter VD (variable distance), for Ethernet communication via 2-, 4- or 8-wire copper cables, 2xRJ45 sockets	**6GK5991-2VA00-8AA2**
Versions with fiber-optic connection (FO)	
• BA 2xLC with LC glass fiber-optic connection	**6ES7193-6AG00-0AA0**
• BA 2xSCRJ with 2 x SCRJ FO connection	**6ES7193-6AP00-0AA0**
• BA 2xLC HA with 2 x LC glass fiber-optic connections	**6DL1193-6AG00-0AA0**
• SIPLUS BusAdapter BA 2xLC with LC glass fiber-optic connection	**6AG1193-6AG00-2AA0**
• SIPLUS BusAdapter BA2SCRJ with 2 x SCRJ FO connection	**6AG1193-6AP00-2AA0**
Media converter versions	
• BA LC/RJ45 Media converter glass fiber-optic cable / CU for 1 x LC FO connection and 1 x RJ45 connection	**6ES7193-6AG20-0AA0**
• BA LC/FC Media converter glass fiber-optic cable / CU 1 x LC FO connection and 1 x RJ45 connection	**6ES7193-6AG40-0AA0**
• BA SCRJ/RJ45 Media converter fiber-optic cable / CU for 1 x SCRJ FO connection and 1 x RJ45 connection	**6ES7193-6AP20-0AA0**
• BA SCRJ/FC Media converter fiber-optic cable / CU 1 x SCRJ FO connection and 1 x FastConnect connection	**6ES7193-6AP40-0AA0**
• BA LC/RJ45 HA Media converter glass fiber-optic cable / CU, 1 x LC FO connection and 1 x RJ45 connection	**6DL1193-6AG20-0AA0**
• BA LC/FC HA Media converter glass fiber-optic cable / CU, 1 x LC FO connection and 1 x FastConnect connection	**6DL1193-6AG40-0AA0**

© Siemens 2020

Accessories

C-PLUG

BusAdapters

BusAdapters offer a free selection of connection system and hardware for the PROFINET interface. **Alternatively,** they can be used for the Industrial Ethernet interface on the device.

The following BusAdapter versions are supported by the IE/PB LINK PN IO:

Versions PN copper interfaces (RJ45 or FastConnect (FC))

- **BA 2xRJ45** with 2 RJ45 connections
- **BA 2xFC** with 2 FastConnect connections
- **BA 2xRJ45 HA** with 2 RJ45 sockets
- **BA 2xFC HA** with 2x FastConnect connection
- **BA 2xRJ45 VD HA** with 2 RJ45 connections for variable distance
- **SIPLUS BusAdapter BA 2xRJ45** with 2 RJ45 connections
- **SIPLUS BusAdapter BA 2xFC** with 2 FastConnect connections

Versions with PN fiber-optic connections (FO)

- **BA 2xLC** with two glass fiber-optic connections (Lucent Connector) with increased potential difference
- **BA 2xSCRJ** with 2 SCRJ FO connections with increased potential difference
- **BA 2xLC HA** with LC glass fiber-optic connection
- **SIPLUS BusAdapter BA 2xLC** with LC glass fiber-optic connection
- **SIPLUS BusAdapter BA2SCRJ** with 2 x SCRJ FO connection

Media converter versions:

- **BA SCRJ / RJ45**, with one glass fiber-optic and one RJ45 connection (media converter)
- **BA LC / FC** with one glass fiber-optic and one FastConnect connection (media converter)
- **BA SCRJ / RJ45**, with one SCRJ FO and one RJ45 connection (media converter)
- **BA SCRJ / FC**, with one SCRJ FO and one FastConnect connection (media converter)
- **BA LC/RJ45 HA** with one LC FO connection and one RJ45 connection
- **BA LC/FC HA** with one LC FO connection and one FastConnect connection

The version for connecting IP67 modules of the SIMATIC ET 200AL (BA-SEND, BA 1xFC) is not supported.

More information

http://www.siemens.com/profinet

© Siemens 2020

Digitalization and Communication

8

8/2 Apps for Process Instrumentation
8/2 SITRANS SAM IQ
8/4 SITRANS mobile IQ
8/5 SITRANS store IQ

8/7 Field Device Instrumentation
8/7 SITRANS DTM
8/8 SIMATIC PDM
8/20 SITRANS Library

8/21 Communication
8/21 SITRANS CC240
8/23 SITRANS MX300
8/25 HART communication protocol
8/26 PROFIBUS
8/27 FOUNDATION Fieldbus

You can download all instructions, catalogs and certificates free of charge at: https://new.siemens.com/global/en/products/automation/process-instrumentation/communication-and-software.html

© Siemens 2020

Overview

SITRANS SAM IQ (Smart Asset Management) is an app that applies diagnostics and monitoring to field device data.

Benefits

- One application for all field devices and protocols
- Increase plant uptime by avoiding upcoming device failures
- Reduce of maintenance costs through event driven maintenance
- Increase transparency of measurement reliability
- Assurance of product and process quality

Application

With the smart asset management app, SITRANS SAM IQ, you can make unused, but valuable, data available. SITRANS SAM IQ will manage all your field device data, with comprehensive possibilities of diagnostics and monitoring.

By monitoring the health state of each field device and event-based device management, SITRANS SAM IQ reduces upcoming device failures. Moreover, device-specific diagnostics of process values and customized multi-parameter dashboards allow you to validate device measurements and optimize your processes.

Design

The cloud based version of SITRANS SAM IQ is updated automatically. The annual license includes the update service.

Application versions	
Standard	
The Standard version includes the following functionality:	
• Device list	Provides an overview of all field instruments with essential device information.
• Device details	• Access to device-specific KPIs. • Track device replacements and configuration changes over the entire life-cycle of a measurement point. • Easy comparison of actual working range with measurement range of the device (e.g. to optimize valve sizes or improve accuracy).
• Events	Detection of unauthorized device or configuration changes.
Advanced	
The Advanced version includes the standard version and the following additional functionality:	
• Analysis	Create custom dashboards to compare values between devices and share expert know-how. Perform customized plausibility checks of measurements for one or more devices.

SITRANS SAM IQ is optimized for Google Chrome on desktop, tablet, and smart phone.

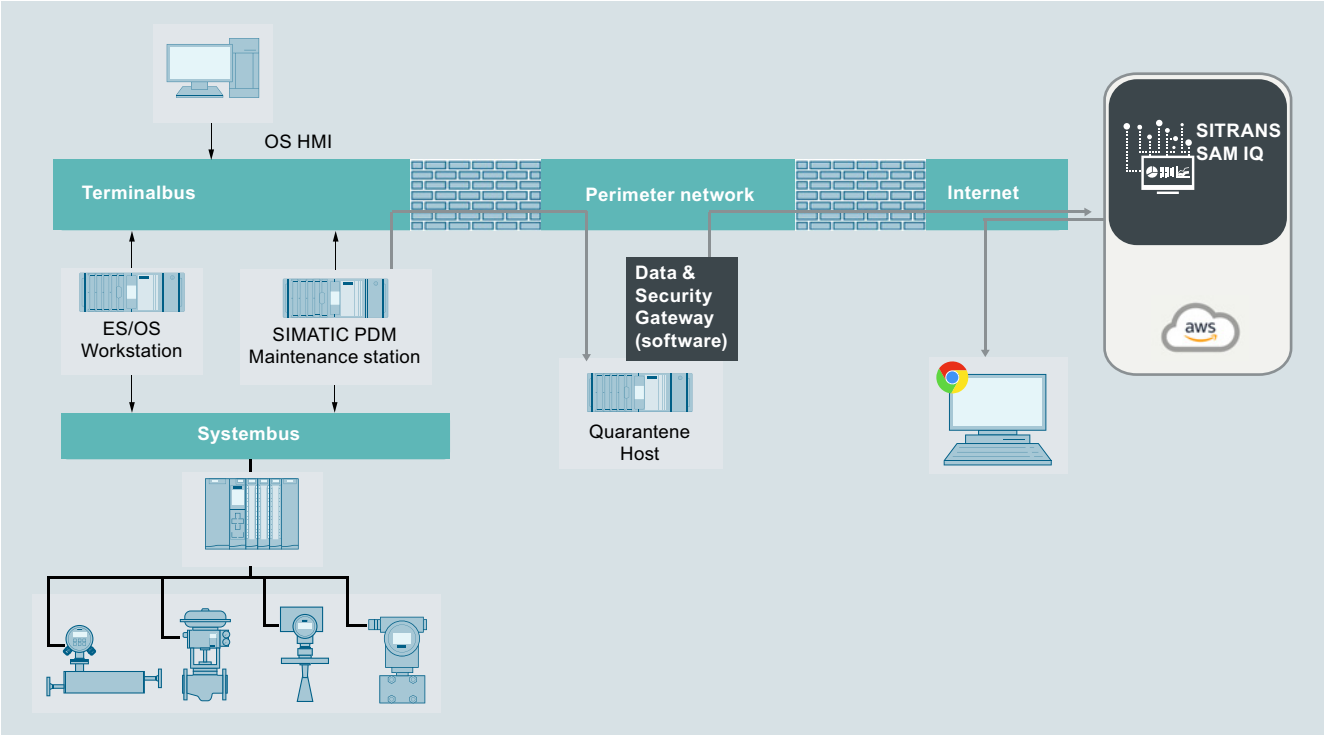

© Siemens 2020

Technical specifications

Google Chrome	Optimized for Google Chrome web browser (version 67 or later)
SIMATIC PDM/SIMATIC PCS 7	Compatible only with data provided through SIMATIC PDM Maintenance Station (V3.0 or later) or SIMATIC PCS 7 Maintenance Station (V9.0.1 or later).
Security	Installation of Data and Security Gateway is required in your IT infrastructure. The software will be provided together with the delivery of SITRANS SAM IQ.

Selection and ordering data

	Article No.
Base package	
SITRANS SAM IQ (Smart Asset Management) is an app that applies diagnostics and monitoring to field device data. Base package for application access is required for Standard and Advanced packages.[1]	
• 1 year license for application access	**6BG0000-0AA111BA**
Standard package	
SITRANS SAM IQ (Smart Asset Management) is an app that applies diagnostics and monitoring to field device data. Standard package includes device list with identification, version and diagnostics, device details, and event list. SITRANS SAM IQ is a cloud app updated automatically.[1]	
• 1 year license for 10 devices	**6BG0000-0AA111BB**
• 1 year license for 100 devices	**6BG0000-0AA111BC**
• 1 year license for 1 000 devices	**6BG0000-0AA111BE**
Advanced package	
SITRANS SAM IQ (Smart Asset Management) is an app that applies diagnostics and monitoring to field device data. Advanced package includes device list with identification, version and diagnostics, device details, and event list. It also features customizable diagnostics view and dashboards. SITRANS SAM IQ is a cloud app updated automatically.[1]	
• 1 year license for 10 devices	**6BG0000-0AA111BG**
• 1 year license for 100 devices	**6BG0000-0AA111BH**
• 1 year license for 1 000 devices	**6BG0000-0AA111BK**
3rd party integration	
For integration of 3rd party devices into SITRANS SAM IQ[1)2)]	
• Integration of one 3rd party device	**6BG0000-0AA241BF**

1) Smart Asset Management product sheet and specific terms and digital service agreement shall apply.

2) Integration of the device requires the parameter description and XML export files from SIMATIC PDM Maintenance station. Conditions from Smart Asset Management technical data sheet shall apply.

© Siemens 2020

Overview

SITRANS mobile IQ is an app that gives you easy access to SITRANS field devices via your smartphone or tablet.

Benefits

- Commissioning and parameterization of field devices.
- Displays device status and measurement values.
- Helps with identifying errors and troubleshooting in case of failures.
- Direct link to manuals, certificates, FAQs, and much more.

Application

Commissioning and parameterization of field devices:

- **Device list**
  All supported devices in the environment are displayed.
- **Device Cockpit**
  Overview of the connected device, device status, and current measured values.
- **Setup**
  Commissioning and parameterization of the device, including graphical support.
- **Charts**
  History of selected measurement and diagnostic values.

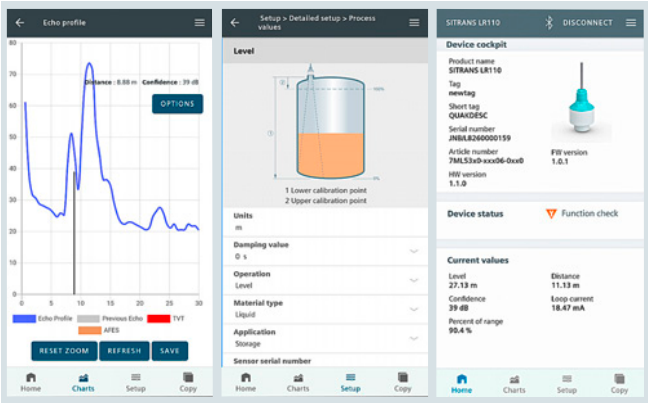

Mode of operation

Mobile devices / operating systems

SITRANS mobile IQ is compatible with supported Android and iOS mobile devices.

SITRANS mobile IQ uses a Bluetooth interface to communicate with the field devices. Your mobile device must have a Bluetooth interface, version 4.2 or better.

Currently supported field devices are listed on SIOS (http://www.siemens.com/osSITRANSmobileIQ) and in the App Store and Google Play. Additional field devices are in preparation and require a new installation of the App on your mobile device. Only the listed field devices are compatible with SITRANS mobile IQ.

Data connection: internet connection is required to access additional information such as manuals of supported field devices.

Integration

Further information

Product note in Industry Online Support – Product Support

https://support.industry.siemens.com/cs/document/109775578/sitrans-mobile-iq?dti=0&lc=en-WW

Download App

Available on the App Store

https://apps.apple.com/us/app/sitrans-mobile-iq/id1496146361

Google play

https://play.google.com/store/apps/details?id=com.siemens.sitransmobileiq&hl=en_US

© Siemens 2020

Overview

SITRANS store IQ is a Siemens MindSphere based application used to monitor and manage inventories in process and discrete industries.

Benefits

- Manage entire inventory network from a central location.
- Reduce overhead required to monitor and plan stock levels.
- Avoid unnecessary downtime and cost associated with unexpected shortages.
- Increase transparency of measurement reliability.

Application

Inventory management is a necessary task in virtually every value chain. Inventories are required whenever material is processed, produced, or assembled. SITRANS store IQ is an inventory management app based on Siemens MindSphere, that records measurements and data from various types of instrumentation, including a level device at a process tank or scales mounted in storage shelves. SITRANS store IQ also monitors auxiliary measurements, helping to better characterize inventories, for example, with temperature readings or binaries.

SITRANS store IQ records readings and visualizes them in a customizable way, offering structuring with hierarchies, map views, and graph views. The acquired data can be used to create proactive alarms via email or SMS, exactly as required for your application. The SITRANS store IQ app can be used on a desktop computer or mobile device.

Design

- A reliable and accurate record of inventory data from anywhere.
- A flexible structure for configuring an inventory network of any size.
- Provides a visualization of an inventory mix, with material breakdown.
- KPI thresholds to easily assess inventory levels.
- Custom alarms for proactive notifications.
- Based on MindSphere and MindSphere connectivity solutions.
- Open to virtually every measurement technology.
- Ability to monitor any process values, including humidity, temperature, digital inputs.

The following standard SITRANS store IQ packages are available:

SITRANS store IQ is distributed via the MindSphere Digital Exchange: https://www.dex.siemens.com

Software packages	Entry	Small	Medium
MindSphere base tenant includes:	✓	✓	✓
MindSphere users	2	2	5
Agents	1	2	10
Data ingest rate	0.01 kB/s	0.05 kB/s	0.1 kB/s
Data storage	0.5 GB	0.5 GB	5 GB
SITRANS store IQ application includes:			
Monitored assets	3	10	100
License type	Subscription with 12-month initial subscription term. The 12 month subscription will renew automatically if not cancelled 60 days before the end of the first subscription term.		

License upgrade options	
Asset upgrade	
Additional monitored assets	10
Additional data ingest rate	0.1 kB/s
Additional data storage	0.5 GB

© Siemens 2020

Integration

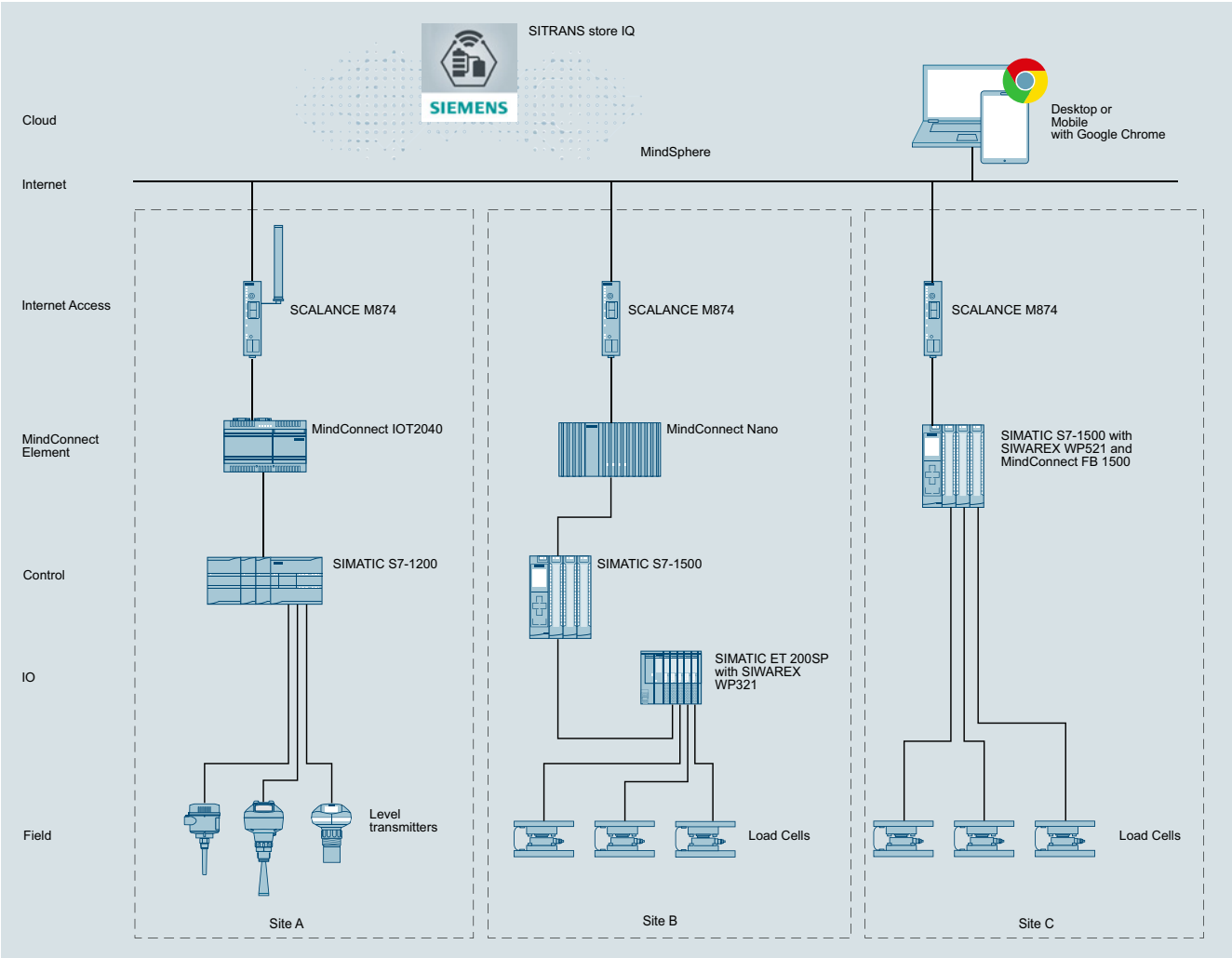

SITRANS store IQ is based on MindSphere and supports various possibilities to onboard instrumentation devices and acquire data. The figure shows several integration examples.

© Siemens 2020

Overview

SITRANS DTM provides an easy way for Field Device Tool (FDT)/ Device Type Manager (DTM) users to parameterize Siemens Instruments using international standards.

Benefits

- Same look and feel for all Siemens field instruments
- Support for Quick start wizards and other dialog boxes
- Quick overview using table and tree views
- Online and offline configuration
- Conformity to IEC profiles for HART and PROFIBUS

Application

Electronic Device Description (EDD) is a proven way to describe the behavior and functionality of field instruments and other automation components.

For many years, EDD-based tools such as SIMATIC PDM from Siemens or handheld communicator have been used successfully in the process industry. Some years ago, an additional technology called FDT / DTM with the same approach was introduced to the market. To support the FDT DTM Technology for Siemens devices, the software SITRANS DTM has been developed which combines both technologies, EDD and FDT.

SITRANS DTM uses EDDs as the device description and provides the DTM interface to allow the integration of our field instruments into FDT-frame applications.

The following field instruments are currently available in SITRANS DTM:

- SITRANS TH300 HART
- SITRANS TH400 PA
- SITRANS P300 HART
- SITRANS P DSIII HART
- SITRANS P F M MAGFLO MAG6000 DP/PA
- SITRANS F C MASSFLO MASS6000 PA/PA
- SITRANS PROBE LU HART 6 m, 12 m
- SITRANS LR200 HART, PA
- SITRANS LR250 HART, PA
- SITRANS LR260 HART, PA
- SITRANS LR560 HART, PA
- SIPART PS2 HART, PA

Additionally, the SIPART PS2 FF has a DTM.

Technical specifications

Current Version	3.1
Compatible with PACTware versions	3.6, 4.0, 4.1
Compatible with Windows	XP, 7
Certified by FDT group	Yes

Free DTM software can be downloaded here:
http://www.siemens.com/sitransdtm

- SITRANS DTM V3.1:
  https://support.industry.siemens.com/cs/document/53754140/software%3A-sitrans-dtm-v3-1?dti=0&lc=de-WW
- SITRANS DTM V4.1:
  https://support.industry.siemens.com/cs/document/109484287/sitrans-dtm-v4-1?dti=0&lc=de-WW

© Siemens 2020

Overview

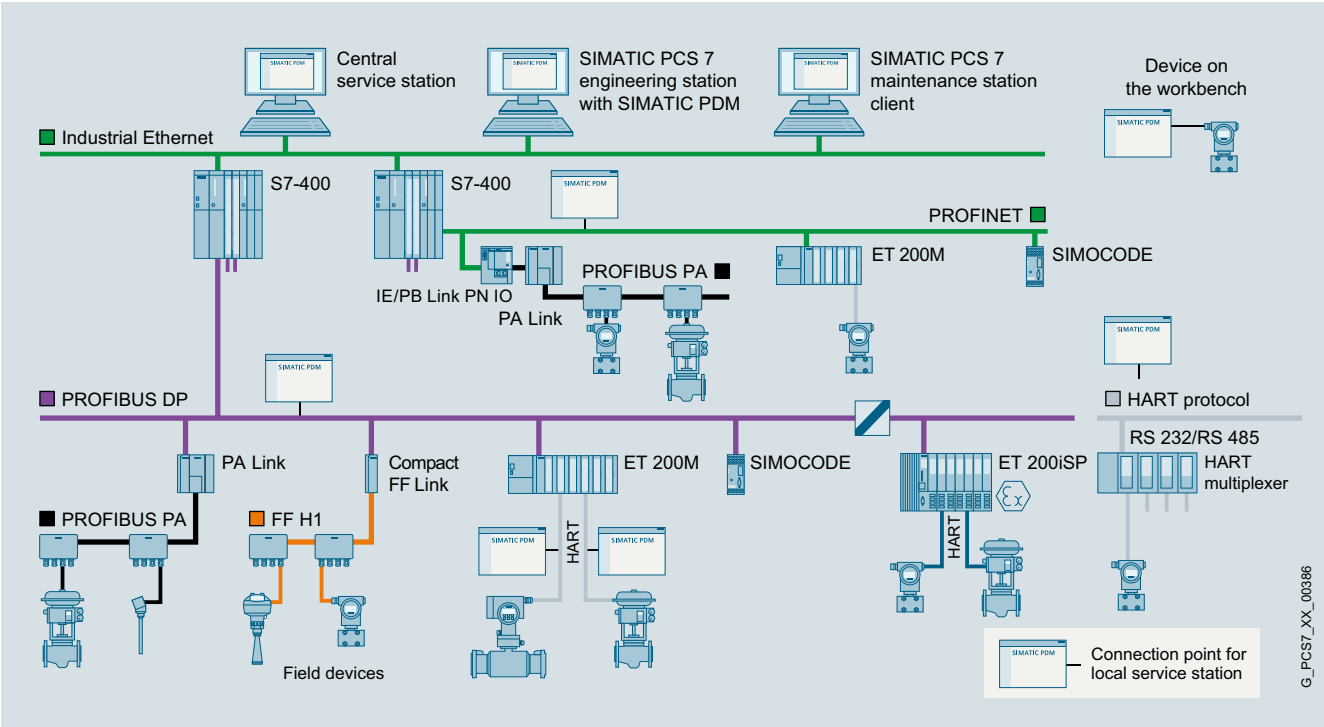

Configuration options with SIMATIC PDM

SIMATIC PDM (Process Device Manager) is a universal, vendor-independent tool for the configuration, parameter assignment, commissioning, diagnostics and servicing of intelligent field devices (sensors and actuators) and field components (remote I/Os, multiplexers, control-room devices, compact controllers), which in the following sections will be referred to simply as devices.

With *one* software product, SIMATIC PDM enables users to work with over 4 000 devices and device variants from Siemens and over 200 other manufacturers worldwide on a *single* homogeneous user interface.

The user interface satisfies the requirements of the VDI/VDE GMA 2187 and IEC 65/349/CD directives. Parameters and functions for all supported devices are displayed in a consistent and uniform fashion independent of their communications interface. Even complex devices with several hundred parameters can be represented clearly and processed quickly. Using SIMATIC PDM it is very easy to navigate in highly complex stations such as remote I/Os and even connected field devices.

From the viewpoint of device integration, SIMATIC PDM is the most powerful open process device manager on the global market. Devices not previously supported can be integrated in SIMATIC PDM by importing their device description packages (either EDD or FDI). This provides security for your investment and saves you investment costs, training expenses and follow-up costs.

SIMATIC PDM supports the operative system management in particular through:

- Uniform representation and operation of devices
- Uniform representation of diagnostics information
- Indicators for preventive maintenance and servicing
- Detection of changes in the project and device
- Increasing the operational reliability
- Reducing the investment, operating and maintenance costs
- Quantity options for
  - Transfer of parameters between devices
  - Transfer of parameter sets to the devices
  - Export and import functions
  - Diagnostics update

© Siemens 2020

Overview (continued)

SIMATIC PDM can be used extremely flexibly and tailored to a specific task for field device service:

- Single-point station for point-to-point connection to field devices
- Local service and parameter assignment station with connection to fieldbus segments
- Central service and parameter assignment station with connection to plant bus
- Central HART service and parameter assignment station for HART multiplexers and WirelessHART field devices
- Integrated into the stand-alone SIMATIC PDM Maintenance Station
- Integrated into the SIMATIC PCS 7 process control system

Maintenance personnel can assign field device parameters at mobile and stationary workstations with SIMATIC PDM. Practically every workstation integrated in the production plant can be used for configuration. Service personnel are thus able to work directly at the location of the field device, while data is stored centrally in the engineering station or maintenance station. This leads to a significant shortening of maintenance and travel times. Additional device-independent system functions support higher-level maintenance stations for creating progress lists for work and servicing.

When a maintenance station is configured in the SIMATIC PCS 7 process control system, SIMATIC PDM is integrated into it and transmits parameter data, diagnostic information and processing information. You can switch directly to the SIMATIC PDM views from the diagnostics faceplates in the maintenance station to perform diagnostics and work on the device in more detail.

A SIMATIC PDM user administration system based on SIMATIC Logon is used to assign various roles with defined function privileges to users. These function privileges refer to SIMATIC PDM system functions, e.g. writing to the device.

For all devices integrated with device description packages, SIMATIC PDM provides a range of information for display and further processing on the maintenance station, for example:

- Device type information (electronic rating plate)
- Detailed diagnostics information (manufacturer information, information on error diagnostics and troubleshooting, further documentation)
- Results of internal condition monitoring functions
- Status information (for example local configuration changes), device test completed
- Information on changes (audit trail report)
- Parameter information

© Siemens 2020

Design

Components	Product packages							
	SIMATIC PDM Stand alone				SIMATIC PDM system-integrated			
	Minimum configuration	Basic configuration	Service and parameter assignment station		in the configuration environment			
			local	central	SIMATIC S7	SIMATIC PCS 7		
	PDM Single Point	**PDM Basic**	**PDM Service**	**PDM Stand alone Server**	**PDM S7**	**PDM PCS 7**	**PDM PCS 7 Server**	**PDM PCS 7 FF**
SIMATIC PDM TAGs[1] in scope of supply	1	4	4 + 50	4 + 100	4 + 100	4 + 100	4 + 100	4 + 100
SIMATIC PDM expansion options								
Count Relevant Licenses (accumulative) - 10 TAGs - 100 TAGs - 1 000 TAGs	*cannot be expanded*	o	o	o	o	o	o	o
SIMATIC PDM Basic		●	●	●	●	●	●	●
SIMATIC PDM Extended		o	o	●	●	●	●	●
SIMATIC PDM integration in STEP 7/PCS 7		o	o	o	●	●	●	●
SIMATIC PDM Routing[2]		o	o	o	o	●	●	●
SIMATIC PDM Server		o	o	●	o	o	●	o
SIMATIC PDM 1 Client[3]		o	o	● (2 ×)	o	o	o	o
SIMATIC PDM Communication FOUNDATION Fieldbus		–	–	–	o	o	o	●
SIMATIC PDM HART Server		o	o	o	o	–	–	–

SIMATIC PDM product structure

● Product component is part of the product package

o Optional product component for the product package; order additive

– Product component is not relevant for the product package or not available

1) For TAG definition, see "Design" section under "SIMATIC PDM TAGs"

2) In combination with SIMATIC PDM Integration in STEP 7/PCS 7

3) In combination with SIMATIC PDM Server

Customer-oriented product structure

The customer-oriented product structure of SIMATIC PDM provides optimal support for the named main use cases and enables you to adapt the scope of functions and performance to your individual requirements. The product range is organized as follows:

SIMATIC PDM Stand alone product packages

- SIMATIC PDM Single Point, a minimum configuration for single device handling
- SIMATIC PDM Basic for local service and parameter assignment stations as well as basic configuration for individual product package with optional product components
- SIMATIC PDM Service for local service and parameter assignment stations
- SIMATIC PDM Stand alone Server for central service and parameter assignment stations, e.g. for various plant units

SIMATIC PDM system-integrated product packages

- SIMATIC PDM S7 for local SIMATIC S7 engineering and service stations
- Various configurations for central SIMATIC PCS 7 engineering and service stations:
  - SIMATIC PDM PCS 7
  - SIMATIC PDM PCS 7 Server (enables device parameter assignment and diagnostics on clients of the PCS 7 engineering station and PCS 7 Maintenance Station)
  - SIMATIC PDM PCS 7-FF (supports the FOUNDATION Fieldbus H1)

In some circumstances, the product packages can be expanded with optional product components (for details, see the Design section).

© Siemens 2020

Design (continued)

Product range	**SIMATIC PDM V9.1**							
	Single Point	**Basic**	**Service**	**Stand alone Server**	**S7**	**PCS 7**	**PCS 7 Server**	**PCS 7-FF**
TAGs contained	**1**	**4**	**4 + 50**	**4 + 100**	**4 + 100**	**4 + 100**	**4 + 100**	**4 + 100**
Project: Create offline	●	●	●	●	●	●	●	●
Project: Usable TAG extensions	–	●	●	●	●	●	●	●
Project: Process device network view	●	●	●	●	●	●	●	●
Project: Process device plant view	●	●	●	●	●	●	●	●
Project: Export/import devices	–	–	●	●	–	–	–	–
Project: Export/import parameters	–	o	●	●	●	●	●	●
Project: HW Config	–	o	o	o	●	●	●	●
Project: Utilization of SIMATIC PDM options	–	●	●	●	●	●	●	●
Project: Integration in STEP 7/PCS 7	–	o	o	o	●	●	●	●
Group operations	–	o	o	●	o	●	●	●
Setting device IDs	–	o	o	●	o	●	●	●
Communication: HART modem	●	●	●	●	●	–	–	–
Communication: HART interface	●	●	●	●	●	–	–	–
Communication: PROFIBUS DP/PA	●	●	●	●	●	●	●	●
Communication: HART over PROFIBUS DP	●	●	●	●	●	●	●	●
Communication: FF H1	–	–	–	–	o	o	o	●
Communication: Modbus	●	●	●	●	●	●	●	●
Communication: Ethernet	●	●	●	●	●	●	●	●
Communication: PROFINET	●	●	●	●	●	●	●	●
Communication: HART over PROFINET	●	●	●	●	●	●	●	●
Devices: Export/import parameters	–	o	o	●	●	●	●	●
Devices: Comparison of parameter values	–	o	o	●	●	●	●	●
Devices: Saving parameters	●	●	●	●	●	●	●	●
Devices: Change log (Audit Trail)	–	o	o	●	●	●	●	●
Devices: Calibration report	–	o	o	●	●	●	●	●
Devices: Print function	●	o	o	●	●	●	●	●
Devices: Document manager	–	o	o	●	●	●	●	●
Lifelist: Basic functionality	●	●	●	●	●	●	●	●
Lifelist: Expanded functionality (scan range, diagnostics, export, addressing)	–	o	o	●	●	●	●	●
Communication: Data record routing	–	o	o	o	o	●	●	●
Communication: HART multiplexer	–	o	o	o	o	–	–	–
Communication: WirelessHART	–	o	o	o	o	–	–	–
Function: HART SHC mode (increased communication speed)	●	●	●	●	●	●	●	●
Function: Device parameterization on PCS 7 maintenance station clients	–	o	o	o	o	o	●	o
Function: Device parameter assignment on SIMATIC PDM clients	–	o	o	● (2 ×)	o	o	o	o

SIMATIC PDM overview of functions and features

● Product component is part of the product package

o Optional product component for the product package; order additive

– Product component is not relevant for the product package or not available

© Siemens 2020

Design (continued)

SIMATIC PDM Stand alone product packages

SIMATIC PDM Single Point V9.1

This minimum configuration with handheld functionality is intended for handling exactly *one* field device via point-to-point coupling. It cannot be expanded with functions or with SIMATIC PDM TAG or SIMATIC PDM 1 Client licenses. Upgrading to a different product variant, e.g. SIMATIC PDM Basic, or a different product version is also not possible.

Supported communication types:

- PROFIBUS DP/PA
- HART communication (modem, RS 232 and via PROFIBUS/PROFINET)
- Modbus
- Ethernet
- PROFINET

The functionality is matched accordingly. The device functions are supported as defined in the device description, for example:

- Managing the device library and unlimited device selection
- Parameter assignment and diagnostics according to the device description
- Exporting and importing of parameter data
- Device identification
- Lifelist
- Printing the parameter list

SIMATIC PDM Basic V9.1

SIMATIC PDM Basic is for local service and parameter assignment stations on any computers (IPC/notebook) with local connection to bus segments or direct connection to the device.

Supported communication types:

- PROFIBUS DP/PA
- HART communication (modem, RS 232 and via PROFIBUS/PROFINET)
- Modbus
- Ethernet
- PROFINET

SIMATIC PDM Basic is equipped with all basic functions required for operation and parameter assignment of devices. That is, compared to SIMATIC PDM Single Point, it has the following additional functions:

- EDD-based diagnostics in the lifelist
- Memory function (only exporting and importing of parameter data)
- Report function
- Communication with HART field devices via remote I/Os

As a basic block for an individual configuration, SIMATIC PDM Basic can be expanded with all functional SIMATIC PDM options (PDM Routing only in combination with PDM Integration in STEP 7/PCS 7 required) as well as with cumulative sets of 10, 100 or 1 000 SIMATIC PDM TAGs. Without TAG expansion, SIMATIC PDM Basic is suitable for projects with up to 4 TAGs. SIMATIC PDM 1 Client licenses (sets of 1) can also be added in combination with the SIMATIC PDM Server option.

The SIMATIC PDM Extended option allows the activation of additional SIMATIC PDM system functions (for details, see SIMATIC PDM Extended V9.1 under "Optional product components").

SIMATIC PDM Service V9.1

With this product package for extended service, local service and parameter assignment stations can be realized on any type of computer (IPC/notebook) with a local connection to a bus segment or direct connection to field devices.

It comprises:

- SIMATIC PDM Basic (incl. 4 SIMATIC PDM TAGs)
- 50 SIMATIC PDM TAGs

Like SIMATIC PDM Basic, SIMATIC PDM Service can be expanded with all functional SIMATIC PDM options (PDM Routing only in combination with PDM Integration in STEP 7/PCS 7 required) as well as with cumulative SIMATIC PDM TAGs (sets of 10, 100 or 1 000) (see "Optional product components"). SIMATIC PDM 1 Client licenses (sets of 1) can also be added in combination with the SIMATIC PDM Server option. It is permitted to upgrade to another product version.

Note: For use of gateways and for PROFINET or Ethernet communication with field devices, SIMATIC PDM TAG licenses are charged for according to the objects configured in the process device plant view as follows:

- 10 SIMATIC PDM TAGs per S7 DSGW (data record gateway) with one PROFIBUS subnet
- 20 SIMATIC PDM TAGs per S7 DSGW with more than one PROFIBUS subnet
- 10 TAGs per IE/PB Link
- 1 TAG per field device (except in the case of special specifications)

SIMATIC PDM stand-alone server V9.1

With the SIMATIC PDM Stand alone Server product package, you can establish central service and parameter assignment stations that operate according to the client/server principle. Portals opened on licensed SIMATIC PDM clients (SIMATIC PDM sessions) enable handling of production plant field devices via the SIMATIC PDM server on the plant bus assigned via registration. The product package can be used multiple times within a plant, e.g. for various plant units. It comprises:

- SIMATIC PDM Basic (incl. 4 SIMATIC PDM TAGs)
- SIMATIC PDM Extended
- SIMATIC PDM Server
- 2 × SIMATIC PDM 1 Client
- 100 SIMATIC PDM TAGs

SIMATIC PDM Stand alone Server can be expanded with all functional SIMATIC PDM options (PDM Routing only in combination with PDM Integration in STEP 7/PCS 7 required) as well as with cumulative sets of 10, 100 or 1 000 SIMATIC PDM TAGs and SIMATIC PDM 1-client licenses (see "Optional product components"). The portals opened on these clients (SIMATIC PDM sessions) must also be licensed with the SIMATIC PDM 1-client licenses (besides the SIMATIC PDM clients). For details about this, refer to "SIMATIC PDM 1 Client" under "Optional product components". For user management of the SIMATIC PDM clients, the SIMATIC Logon product is also required. It is possible to upgrade to another product version.

Note: For use of gateways and for PROFINET or Ethernet communication with field devices, SIMATIC PDM TAG licenses are charged according to the objects configured in the process device plant view (for details, see corresponding note under SIMATIC PDM Service V9.1).

© Siemens 2020

Design (continued)

SIMATIC PDM system-integrated product packages

SIMATIC PDM S7 V9.1

The SIMATIC PDM S7 product package designed for use in a SIMATIC S7 configuration environment is intended for setup of a local SIMATIC S7 engineering and service station. It requires the installation of STEP 7 V5.5+SP4. It includes:

- SIMATIC PDM Basic (incl. 4 SIMATIC PDM TAGs)
- SIMATIC PDM Extended
- SIMATIC PDM integration in STEP 7/PCS 7
- 100 SIMATIC PDM TAGs

SIMATIC PDM S7 can be expanded with the functional options SIMATIC PDM Routing, SIMATIC PDM Communication FOUNDATION Fieldbus, SIMATIC PDM Server, and SIMATIC PDM HART Server as well as with cumulative SIMATIC PDM TAGs (sets of 10, 100 or 1 000) (see "Optional product components"). SIMATIC PDM 1 Client licenses (sets of 1) can also be added in combination with the SIMATIC PDM Server option.

SIMATIC PDM PCS 7 V9.1

The SIMATIC PDM PCS 7 product package suitable for use in a SIMATIC PCS 7 configuration environment is intended for use in a central SIMATIC PCS 7 engineering and service station. It comprises:

- SIMATIC PDM Basic (incl. 4 SIMATIC PDM TAGs)
- SIMATIC PDM Extended
- SIMATIC PDM integration in STEP 7/PCS 7
- SIMATIC PDM Routing
- 100 SIMATIC PDM TAGs

SIMATIC PDM PCS 7 can be expanded with the functional options SIMATIC PDM Communication FOUNDATION Fieldbus and SIMATIC PDM Server as well as with cumulative SIMATIC PDM TAGs (sets of 10, 100 or 1000) (see "Optional product components"). SIMATIC PDM 1 Client licenses (sets of 1) can also be added in combination with the SIMATIC PDM Server option.

SIMATIC PDM PCS 7 Server V9.1

Instead of SIMATIC PDM PCS 7, the SIMATIC PDM PCS 7 Server product package expanded with the SIMATIC PDM Server option can also be used for a central SIMATIC PCS 7 engineering and service station. Field devices integrated using an Electronic Device Description (EDD) can then be assigned parameters on any client of the SIMATIC PCS 7 Maintenance Station as well as on local SIMATIC PDM clients. The following are components of SIMATIC PDM PCS 7 Server:

- SIMATIC PDM Basic (incl. 4 SIMATIC PDM TAGs)
- SIMATIC PDM Extended
- SIMATIC PDM integration in STEP 7/PCS 7
- SIMATIC PDM Routing
- SIMATIC PDM Server
- 100 SIMATIC PDM TAGs

SIMATIC PDM PCS 7 Server can be expanded with the functional option SIMATIC PDM Communication FOUNDATION Fieldbus as well as with cumulative sets of 10, 100 or 1 000 SIMATIC PDM TAGs and SIMATIC PDM 1-Client licenses (see "Optional product components"). The portals opened on these clients (SIMATIC PDM sessions) must also be licensed with the SIMATIC PDM 1-client licenses (besides the SIMATIC PDM clients). For details about this, refer to "SIMATIC PDM 1 Client" under "Optional product components".

SIMATIC PDM PCS 7-FF V9.1

Instead of SIMATIC PDM PCS 7, the SIMATIC PDM PCS 7-FF product package expanded with the SIMATIC PDM Communication FOUNDATION Fieldbus option can also be used for a central SIMATIC PCS 7 engineering and service station. This additionally supports parameter assignment of field devices on FOUNDATION Fieldbus H1. Components of SIMATIC PDM PCS 7-FF are:

- SIMATIC PDM Basic (incl. 4 SIMATIC PDM TAGs)
- SIMATIC PDM Extended
- SIMATIC PDM integration in STEP 7/PCS 7
- SIMATIC PDM Routing
- SIMATIC PDM Communication FOUNDATION Fieldbus
- 100 SIMATIC PDM TAGs

SIMATIC PDM PCS 7-FF V9.1 can be expanded with the functional option SIMATIC PDM Server as well as with cumulative sets of 10, 100 or 1 000 SIMATIC PDM TAGs (see "Optional product components"). SIMATIC PDM 1 Client licenses (sets of 1) can also be added in combination with the SIMATIC PDM Server option.

Optional product components

SIMATIC PDM Extended V9.1 option

The SIMATIC PDM Extended option enables you to unlock other system functions for SIMATIC PDM Basic and SIMATIC PDM, for example:

- Change log
- Calibration report
- Extended information in the Lifelist
- Export and import functions
- Print functions
- Document manager
- Comparison function
- Group operations
- Setting device IDs

This functionality is already integrated in the following product packages: SIMATIC PDM Stand alone Server, SIMATIC PDM S7, SIMATIC PDM PCS 7, SIMATIC PDM PCS 7 Server and SIMATIC PDM PCS 7-FF.

SIMATIC PDM Integration option in STEP 7/PCS 7 V9.1

This option is used for the integration of SIMATIC PDM in a SIMATIC S7 or SIMATIC PCS 7 configuration environment. SIMATIC PDM can then be started directly from the hardware configurator (HW Config) in STEP 7/SIMATIC PCS 7.

This functionality is already integrated in the product packages of category "SIMATIC PDM system-integrated" (SIMATIC PDM S7, SIMATIC PDM PCS 7, SIMATIC PDM PCS 7 Server, and SIMATIC PDM PCS 7-FF).

© Siemens 2020

Design (continued)

SIMATIC PDM Routing V9.1 option

If SIMATIC PDM is used on an engineering station, the SIMATIC PDM Routing option enables handling of every device in the field that can be configured per EDD throughout the plant and across different bus systems and remote I/Os.
SIMATIC PDM Routing can be used in combination with SIMATIC PDM Integration in STEP 7/SIMATIC PCS 7.

Routing is already integrated in SIMATIC PDM PCS 7, SIMATIC PDM PCS 7 Server, and SIMATIC PDM PCS 7-FF. SIMATIC PDM Routing can be additionally installed as an option on a local SIMATIC S7 engineering and service station with SIMATIC PDM S7.

SIMATIC PDM Server V9.1 option

The server functionality can be activated in a local or central service station with this option. It enables parameter assignment of selected field devices on any client of the SIMATIC PCS 7 Maintenance Station as well as on local SIMATIC PDM clients. This functionality is already integrated in the SIMATIC PDM Stand alone Server and SIMATIC PDM PCS 7 Server. The SIMATIC PDM clients as well as the portals opened on these clients (SIMATIC PDM sessions) must be licensed with SIMATIC PDM 1 client licenses. For details about this, refer to "SIMATIC PDM 1 Client" under "Optional product components".

SIMATIC PDM Communication FOUNDATION Fieldbus V9.1 option

In a SIMATIC S7/PCS 7 configuration environment, using this option SIMATIC PDM can communicate with field devices on the FOUNDATION Fieldbus H1 via the FF link.

This functionality is already integrated in the SIMATIC PDM PCS 7-FF product package.

SIMATIC PDM HART Server V9.1 option

This option permits the use of HART multiplexers from various vendors in SIMATIC PDM. Furthermore, WirelessHART field devices can also be parameterized with SIMATIC PDM.

SIMATIC PDM TAGs (version-independent)

Depending on the project size, the SIMATIC PDM TAGs supplied with a product package (except SIMATIC PDM Single Point) can be cumulatively expanded with sets of 10, 100 or 1 000 SIMATIC PDM TAGs.

A SIMATIC PDM TAG corresponds to a SIMATIC PDM object that represents the individual field devices or field components within a project, e.g. measuring instruments, positioners, switching devices or remote I/Os. SIMATIC PDM TAGs are also relevant for diagnostics with the lifelist of SIMATIC PDM. In this case, TAGs are considered to be all recognized devices with diagnostics capability, whose detailed diagnostics is effected through the device description (EDD).

SIMATIC PDM 1 Client (version-independent)

SIMATIC PDM 1 Client is a cumulative single-client license for SIMATIC PDM configurations with SIMATIC PDM server, for example SIMATIC PDM stand-alone server or SIMATIC PDM PCS 7 server. The license is used to activate registered SIMATIC PDM clients and SIMATIC PDM sessions (opened portals) on these clients.

Each "SIMATIC PDM 1 Client" license activates one SIMATIC PDM client with one SIMATIC PDM session.
A SIMATIC PDM session is defined as one opened portal together with the parameter views of the field devices opened from the portal. Each additional simultaneously opened SIMATIC PDM session on this client requires its own "SIMATIC PDM 1 Client" license. For larger projects, up to 30 registered SIMATIC PDM Clients are possible.

The "SIMATIC PDM 1 Client" license must be transferred to the computer with the SIMATIC PDM Server. The SIMATIC PDM Standalone Server product package comes with 2 "SIMATIC PDM 1 Client" licenses.

SIMATIC PDM Software Media Package V9.1

The current SIMATIC PDM installation software is offered without a license in the form of the SIMATIC PDM Software Media Package. Purchasing of corresponding software licenses is necessary to unlock the product-specific functionalities.

With SIMATIC PDM product packages, a SIMATIC PDM Software Media Package is supplied together with each ordering item when supplied via goods delivery (not with optional product components). Further SIMATIC PDM Software Media Packages must be ordered separately as required.

The software of the SIMATIC PDM Media Package without a license can be used for demonstration purposes in demo mode. The SIMATIC PDM functionality is limited as follows in demo mode:

- Stand alone mode
- Storage functions disabled
- Export and import functions disabled
- Expanded functionality disabled
- Communication functions restricted

Information on ordering and delivery

Installation software for the SIMATIC PDM is provided in the form of a software media package. Software media packages and product-specific software licenses are separate packages, which are not merged into a single delivery unit for a goods delivery.

The number of delivered software media packages can be determined by the number of ordered items. You can find more information under "Delivery form package" in the "Software Media and Logistics" chapter, "PCS 7 Software Packages" section of the ST PCS 7 catalog.

© Siemens 2020

Function

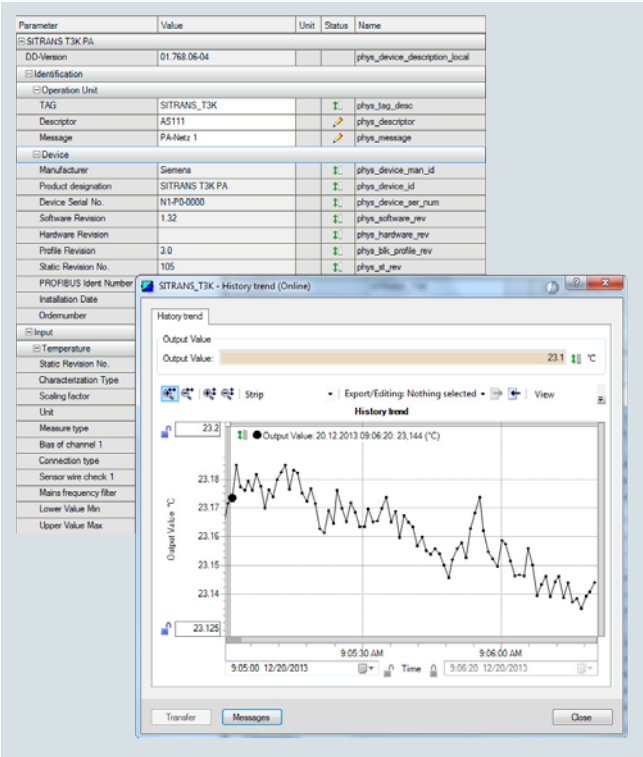

SIMATIC PDM, parameter view and trend window

SIMATIC PDM core functions

- Creation of project-specific device libraries
- Adjustment and modification of device parameters
- Comparing (e.g. project and device data)
- Plausibility testing of data input
- Device identification and testing
- Device status indication (operating modes, interrupts, states)
- Simulation
- Diagnostics (standard, detailed)
- Export/import (parameter data, logs, documents)
- Management (e.g. networks and PCs)
- Commissioning functions, e.g. measuring circuit tests of device data
- Lifecycle management functions, e.g. for device replacement
- Global and device-specific modification logbook for user operations (audit trail)
- Device-specific calibration reports
- Graphic presentations of echo envelope curves, trend displays, valve diagnosis results etc.
- Presentation of incorporated manuals
- Document manager for integration of up to 10 multimedia files

Integration

Device integration

SIMATIC PDM supports all devices defined by the Electronic Device Description (EDD) and devices described by Field Device Integration Technology (FDI Technology V1.2). EDD is standardized to EN 50391 and IEC 61804. Internationally it is the most widely used standardized technology for device integration. At the same time, it is the guideline of the established organizations for

- PROFIBUS and PROFINET (PI – PROFIBUS & PROFINET International)
- HART (FCG: Field Communication Group)
- Foundation Fieldbus (FCG: Field Communication Group)

The devices are integrated directly in SIMATIC PDM through a company-specific EDD or through the libraries of the FCG. To achieve improved transparency, they can be managed in project-specific device libraries.

Field devices are described in the EDD or FDI device description packages in terms of functionality and construction using the Electronic Device Description Language (EDDL). Using this description, SIMATIC PDM automatically creates its user interfaces with the specific device data. By simply importing the manufacturer's device-specific device description packages, you can update existing devices and integrate further devices in SIMATIC PDM.

Technical support

If you wish to use devices which cannot be found in the SIMATIC PDM device description library, we would be pleased to help you integrate them.

Support Request

You can request support by service specialists at Technical Support by using a "Support Request" on the Internet:

http://www.siemens.com/automation/support-request

Contacts in the Region

The Technical Support responsible for your Region can be found on the Internet at:

http://www.automation.siemens.com/partner

Technical specifications

SIMATIC PDM V9.1	
Hardware	• PG/PC/notebook with processor corresponding to operating system requirements
Operating system (alternatives)	• Windows 7 Professional/Ultimate/Enterprise SP1 32-bit/64-bit • Windows 10 Enterprise 2015 LTSB 64-bit • Windows Server 2012 R2 SP1 Standard Edition, 64-bit • Microsoft Windows Server 2016 Standard 64-bit
Integration in STEP 7/PCS 7	• SIMATIC PCS 7 V8.0+SP2/V8.1/V8.2 (without Communication FOUNDATION Fieldbus) • SIMATIC PCS 7 V9.0 • STEP 7 V5.5+SP4/V5.6
SIMATIC PDM Client	• Microsoft Internet Explorer 10 or 11 • Google Chrome

© Siemens 2020

Selection and ordering data

	Article No.
SIMATIC PDM Stand alone product packages	
Minimum configuration	
SIMATIC PDM Single Point V9.1 including 1 TAG; product package for operation and configuration of one field device; communication via PROFIBUS DP/PA, HART (modem, RS 232, PROFIBUS/PROFINET), Modbus, Ethernet or PROFINET	
Additional functions or SIMATIC PDM TAGs are not possible	
6 languages (English, German, French, Italian, Spanish, Chinese), software class A, runs on Windows 7 Ultimate 64-bit, Windows 10 Enterprise 2015 LTSB 64-bit, Windows Server 2012 R2 Standard 64-bit or Microsoft Windows Server 2016 Standard 64-bit (see SIMATIC PDM V9.1 Readme for latest information), floating license for 1 user	
Without SIMATIC PCS 7 Software Media Package	
• Goods delivery License key on USB flash drive and Certificate of License, bundle with 1 × SIMATIC PDM Software Media Package per order item	**6ES7658-3HA68-0YA5**
• Online delivery License key download and online Certificate of License combined with SIMATIC PDM Software Media Package (SIMATIC PDM and device library software download) Note: Email address required!	**6ES7658-3HA68-0YH5**
Basic configuration for individual product package as well as local service and parameter assignment stations	
SIMATIC PDM Basic V9.1 including 4 TAGs; product package for operation and configuration of field devices and components; communication via PROFIBUS DP/PA, HART (modem, RS 232, PROFIBUS/PROFINET), Modbus, Ethernet or PROFINET	
6 languages (English, German, French, Italian, Spanish, Chinese), software class A, runs on Windows 7 Ultimate 64-bit, Windows 10 Enterprise 2015 LTSB 64-bit, Windows Server 2012 R2 Standard 64-bit or Microsoft Windows Server 2016 Standard 64-bit (see SIMATIC PDM V9.1 Readme for latest information), floating license for 1 user	
Without SIMATIC PCS 7 Software Media Package	
• Goods delivery License key on USB flash drive and Certificate of License, bundle with 1 × SIMATIC PDM Software Media Package per order item	**6ES7658-3AB68-0YA5**
• Online delivery License key download and online Certificate of License combined with SIMATIC PDM Software Media Package (SIMATIC PDM and device library software download) Note: Email address required!	**6ES7658-3AB68-0YH5**

	Article No.
Configuration for local service and parameter assignment station	
SIMATIC PDM Service V9.1 Product package for service and measuring circuit tests on a local service station, with • SIMATIC PDM Basic incl. 4 TAGs • 50 TAGs	
6 languages (English, German, French, Italian, Spanish, Chinese), software class A, runs on Windows 7 Ultimate 64-bit, Windows 10 Enterprise 2015 LTSB 64-bit, Windows Server 2012 R2 Standard 64-bit or Microsoft Windows Server 2016 Standard 64-bit (see SIMATIC PDM V9.1 Readme for latest information), floating license for 1 user	
Without SIMATIC PCS 7 Software Media Package	
• Goods delivery License key on USB flash drive and Certificate of License, bundle with 1 × SIMATIC PDM Software Media Package per order item	**6ES7658-3JD68-0YA5**
• Online delivery License key download and online Certificate of License combined with SIMATIC PDM Software Media Package (SIMATIC PDM and device library software download) Note: Email address required!	**6ES7658-3JD68-0YH5**
Configuration for central service and parameter assignment station	
SIMATIC PDM stand-alone server V9.1 Product package for service and device management in plant units, with - SIMATIC PDM Basic incl. 4 TAGs - SIMATIC PDM Extended - SIMATIC PDM Server - 2 × SIMATIC PDM 1 Client - 100 TAGs	
6 languages (English, German, French, Italian, Spanish, Chinese), software class A, runs with Windows 7 Ultimate 64-bit, Windows 10 Enterprise 2015 LTSB 64-bit, Windows Server 2012 R2 Standard 64-bit or Microsoft Windows Server 2016 Standard 64-bit (see SIMATIC PDM V9.1 Readme for latest information), single license for 1 installation	
Without SIMATIC PCS 7 Software Media Package	
• Goods delivery License key on USB flash drive and Certificate of License, bundle with 1 × SIMATIC PDM Software Media Package per order item	**6ES7658-3TX68-0YA5**
• Online delivery License key download and online Certificate of License combined with SIMATIC PDM Software Media Package (SIMATIC PDM and device library software download) Note: Email address required!	**6ES7658-3TX68-0YH5**

© Siemens 2020

Selection and ordering data

	Article No.
SIMATIC PDM system-integrated product packages	
Configuration for local SIMATIC S7 engineering and service station	
SIMATIC PDM S7 V9.1 Product package for use in a SIMATIC S7 configuration environment, with - SIMATIC PDM Basic incl. 4 TAGs - SIMATIC PDM Extended - SIMATIC PDM Integration in STEP 7/PCS 7 - 100 TAGs 6 languages (English, German, French, Italian, Spanish, Chinese), software class A, runs on Windows 7 Ultimate 64-bit, Windows 10 Enterprise 2015 LTSB 64-bit, Windows Server 2012 R2 Standard 64-bit or Microsoft Windows Server 2016 Standard 64-bit (see SIMATIC PDM V9.1 Readme for latest information), floating license for 1 user Without SIMATIC PCS 7 Software Media Package	
• Goods delivery License key on USB flash drive and Certificate of License, bundle with 1 × SIMATIC PDM Software Media Package per order item	**6ES7658-3KD68-0YA5**
• Online delivery License key download and online Certificate of License combined with SIMATIC PDM Software Media Package (SIMATIC PDM and device library software download) Note: Email address required!	**6ES7658-3KD68-0YH5**
Configuration for central SIMATIC PCS 7 engineering and service stations	
SIMATIC PDM PCS 7 V9.1 Product package for use in a SIMATIC PCS 7 configuration environment 6 languages (English, German, French, Italian, Spanish, Chinese), software class A, runs with Windows 7 Ultimate 64-bit, Windows 10 Enterprise 2015 LTSB 64-bit, Windows Server 2012 R2 Standard 64-bit or Microsoft Windows Server 2016 Standard 64-bit (see SIMATIC PDM V9.1 Readme for latest information) Floating license for 1 user, with - SIMATIC PDM Basic incl. 4 TAGs - SIMATIC PDM Extended - SIMATIC PDM Integration in STEP 7/PCS 7 - SIMATIC PDM Routing - 100 TAGs Without SIMATIC PCS 7 Software Media Package	
• Goods delivery License key on USB flash drive and Certificate of License, bundle with 1 × SIMATIC PDM Software Media Package per order item	**6ES7658-3LD68-0YA5**
• Online delivery License key download and online Certificate of License combined with SIMATIC PDM Software Media Package (SIMATIC PDM and device library software download) Note: Email address required!	**6ES7658-3LD68-0YH5**

	Article No.
SIMATIC PDM PCS 7-FF V9.1 Product package for use in a SIMATIC PCS 7 configuration environment, including FOUNDATION Fieldbus H1 communication 6 languages (English, German, French, Italian, Spanish, Chinese), software class A, runs with Windows 7 Ultimate 64-bit, Windows 10 Enterprise 2015 LTSB 64-bit, Windows Server 2012 R2 Standard 64-bit or Microsoft Windows Server 2016 Standard 64-bit (see SIMATIC PDM V9.1 Readme for latest information) Floating license for 1 user, with - SIMATIC PDM Basic incl. 4 TAGs - SIMATIC PDM Extended - SIMATIC PDM Integration in STEP 7/PCS 7 - SIMATIC PDM Routing - SIMATIC PDM Communication FOUNDATION Fieldbus - 100 TAGs Without SIMATIC PCS 7 Software Media Package	
• Goods delivery License key on USB flash drive and Certificate of License, bundle with 1 × SIMATIC PDM Software Media Package per order item	**6ES7658-3MD68-0YA5**
• Online delivery License key download and online Certificate of License combined with SIMATIC PDM Software Media Package (SIMATIC PDM and device library software download) Note: Email address required!	**6ES7658-3MD68-0YH5**
SIMATIC PDM PCS 7 Server V9.1 Product package for use in a SIMATIC PCS 7 configuration environment, including server functionality 6 languages (English, German, French, Italian, Spanish, Chinese), software class A, runs with Windows 7 Ultimate 64-bit, Windows 10 Enterprise 2015 LTSB 64-bit, Windows Server 2012 R2 Standard 64-bit or Microsoft Windows Server 2016 Standard 64-bit (see SIMATIC PDM V9.1 Readme for latest information) Single license for 1 installation, with - SIMATIC PDM Basic incl. 4 TAGs - SIMATIC PDM Extended - SIMATIC PDM Integration in STEP 7/PCS 7 - SIMATIC PDM Routing - SIMATIC PDM Server - 100 TAGs Without SIMATIC PCS 7 Software Media Package	
• Goods delivery License key on USB flash drive and Certificate of License, bundle with 1 × SIMATIC PDM Software Media Package per order item	**6ES7658-3TD68-0YA5**
• Online delivery License key download and online Certificate of License combined with SIMATIC PDM Software Media Package (SIMATIC PDM and device library software download) Note: Email address required!	**6ES7658-3TD68-0YH5**

© Siemens 2020

Selection and ordering data

	Article No.
Optional product components for SIMATIC PDM	
SIMATIC PDM Extended V9.1 For enabling additional system functions 6 languages (English, German, French, Italian, Spanish, Chinese), software class A, runs on Windows 7 Ultimate 64-bit, Windows 10 Enterprise 2015 LTSB 64-bit, Windows Server 2012 R2 Standard 64-bit or Microsoft Windows Server 2016 Standard 64-bit (see SIMATIC PDM V9.1 Readme for latest information), floating license for 1 user Without SIMATIC PCS 7/SIMATIC PDM Software Media Package	
• Goods delivery License key on USB flash drive and Certificate of License	**6ES7658-3NX68-2YB5**
• Online delivery (without SIMATIC PCS 7/SIMATIC PDM Software Media Package) License key download and online Certificate of License Note: Email address required!	**6ES7658-3NX68-2YH5**
SIMATIC PDM Integration in STEP 7/SIMATIC PCS 7 V9.1 For integration in a SIMATIC S7/SIMATIC PCS 7 configuration environment 6 languages (English, German, French, Italian, Spanish, Chinese), software class A, runs on Windows 7 Ultimate 64-bit, Windows 10 Enterprise 2015 LTSB 64-bit, Windows Server 2012 R2 Standard 64-bit or Microsoft Windows Server 2016 Standard 64-bit (see SIMATIC PDM V9.1 Readme for latest information), floating license for 1 user Without SIMATIC PCS 7/SIMATIC PDM Software Media Package	
• Goods delivery License key on USB flash drive and Certificate of License	**6ES7658-3BX68-2YB5**
• Online delivery License key download and online Certificate of License Note: Email address required!	**6ES7658-3BX68-2YH5**
SIMATIC PDM Routing V9.1 For plant-wide navigation to field devices 6 languages (English, German, French, Italian, Spanish, Chinese), software class A, runs on Windows 7 Ultimate 64-bit, Windows 10 Enterprise 2015 LTSB 64-bit, Windows Server 2012 R2 Standard 64-bit or Microsoft Windows Server 2016 Standard 64-bit (see SIMATIC PDM V9.1 Readme for latest information), floating license for 1 user Without SIMATIC PCS 7/SIMATIC PDM Software Media Package	
• Goods delivery License key on USB flash drive and Certificate of License	**6ES7658-3CX68-2YB5**
• Online delivery License key download, online Certificate of License Note: Email address required!	**6ES7658-3CX68-2YH5**

	Article No.
SIMATIC PDM Server V9.1 For activating the server functionality 6 languages (English, German, French, Italian, Spanish, Chinese), software class A, runs with Windows 7 Ultimate 64-bit, Windows 10 Enterprise 2015 LTSB 64-bit, Windows Server 2012 R2 Standard 64-bit or Microsoft Windows Server 2016 Standard 64-bit (see SIMATIC PDM V9.1 Readme for latest information), single license for 1 installation Without SIMATIC PCS 7/SIMATIC PDM Software Media Package	
• Goods delivery License key on USB flash drive, Certificate of License	**6ES7658-3TX68-2YB5**
• Online delivery License key download and online Certificate of License Note: Email address required!	**6ES7658-3TX68-2YH5**
SIMATIC PDM Communication FOUNDATION Fieldbus V9.1 For communication with field devices on FOUNDATION Fieldbus H1 6 languages (English, German, French, Italian, Spanish, Chinese), software class A, runs on Windows 7 Ultimate 64-bit, Windows 10 Enterprise 2015 LTSB 64-bit, Windows Server 2012 R2 Standard 64-bit or Microsoft Windows Server 2016 Standard 64-bit (see SIMATIC PDM V9.1 Readme for latest information), floating license for 1 user Without SIMATIC PCS 7/SIMATIC PDM Software Media Package	
• Goods delivery License key on USB flash drive and Certificate of License	**6ES7658-3QX68-2YB5**
• Online delivery License key download and online Certificate of License Note: Email address required!	**6ES7658-3QX68-2YH5**
SIMATIC PDM HART Server V9.1 For using HART multiplexers as well as for configuration of WirelessHART field devices 6 languages (English, German, French, Italian, Spanish, Chinese), software class A, runs on Windows 7 Ultimate 64-bit, Windows 10 Enterprise 2015 LTSB 64-bit, Windows Server 2012 R2 Standard 64-bit or Microsoft Windows Server 2016 Standard 64-bit (see SIMATIC PDM V9.1 Readme for latest information), floating license for 1 user Without SIMATIC PCS 7/SIMATIC PDM Software Media Package	
• Goods delivery License key on USB flash drive and Certificate of License	**6ES7658-3EX68-2YB5**
• Online delivery License key download and online Certificate of License Note: Email address required!	**6ES7658-3EX68-2YH5**

© Siemens 2020

Selection and ordering data

	Article No.
SIMATIC PDM 1 Client Cumulative client license for SIMATIC PDM configurations with SIMATIC PDM Server, software class A, single license for 1 installation	
• Goods delivery License key on USB flash drive and Certificate of License	**6ES7658-3UA00-2YB5**
• Online delivery License key download and online Certificate of License Note: Email address required!	**6ES7658-3UA00-2YH5**
SIMATIC PDM TAGs TAG licenses for expanding the available TAG volume, cumulative, software class A, floating license for 1 user	
• Goods delivery License key on USB flash drive and Certificate of License	
- 10 TAGs	**6ES7658-3XC00-2YB5**
- 100 TAGs	**6ES7658-3XD00-2YB5**
- 1 000 TAGs	**6ES7658-3XE00-2YB5**
• Online delivery License key download and online Certificate of License Note: Email address required!	
- 10 TAGs	**6ES7658-3XC00-2YH5**
- 100 TAGs	**6ES7658-3XD00-2YH5**
- 1 000 TAGs	**6ES7658-3XE00-2YH5**

	Article No.
SIMATIC PDM Software Media Package	
SIMATIC PDM Software Media Package V9.1 Installation software without license, 6 languages (English, German, French, Italian, Spanish, Chinese), software class A, runs on Windows 7 Ultimate 64-bit, Windows 10 Enterprise 2015 LTSB 64-bit, Windows Server 2012 R2 Standard 64-bit or Microsoft Windows Server 2016 Standard 64-bit (see SIMATIC PDM V9.1 Readme for latest information) Without SIMATIC PCS 7 Software Media Package Note: Can only be used in conjunction with a valid license or in demo mode!	
• Goods delivery SIMATIC PDM and device library software on DVD	**6ES7658-3GX68-0YT8**
• Online delivery SIMATIC PDM and device library software download Note: Email address required!	**6ES7658-3GX68-0YG8**

More information

Update/Upgrade

Existing installations based on SIMATIC PDM V6.x or V8.x/V9.0 (including SP in each case) can be upgraded straight to V9.1 with upgrade packages.

Projects with SIMATIC PDM V7.0 can only be upgraded to version 9.1 by first upgrading to version 8.0. Two upgrade packages are offered for SIMATIC PDM V8.x/V9.0:

- SIMATIC PDM Upgrade Package Basic[1)] (with/without SIMATIC PDM HART Server option in each case) for configurations based on:
  - SIMATIC PDM Basic
  - SIMATIC PDM Service
  - SIMATIC PDM S7
  - SIMATIC PDM PCS 7
- SIMATIC PDM Upgrade Package Complete[1)] for configurations based on:
  - SIMATIC PDM PCS 7 Server
  - SIMATIC PDM PCS 7-FF

[1)] Optional product components for SIMATIC PDM such as PDM Extended, PDM Integration in STEP 7/PCS 7, PDM Routing, PDM Server and PDM Communication FOUNDATION Fieldbus are each included in a product package listed in the SIMATIC PDM Upgrade Package Basic or SIMATIC PDM Upgrade Package Complete and are implicitly authorized to be updated via the corresponding license. The SIMATIC PDM Upgrade Package Complete is required for use of the product components PDM Server or PDM Communication FOUNDATION Fieldbus.

For more information, see the section "Update/upgrade packages", "Updates/upgrades asynchronous to the PCS 7 version" - "Upgrades SIMATIC PDM".

© Siemens 2020

Overview

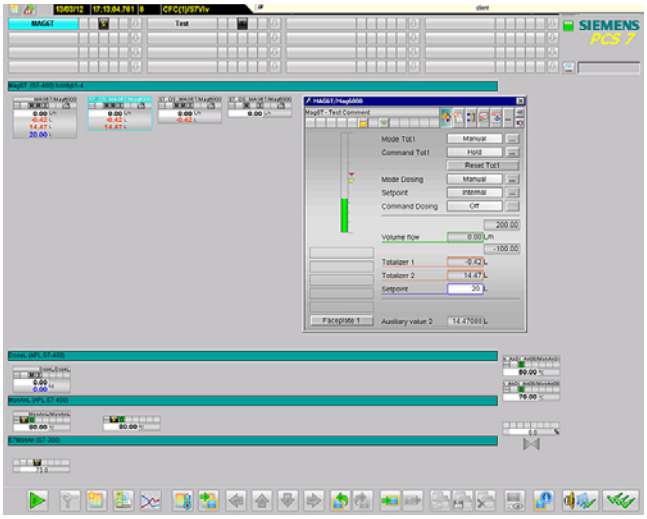

The SITRANS Library for SIMATIC PCS 7 V8.0 and higher extends the standard functionality of the SIMATIC PCS 7 process control system concentrated in the SIMATIC PCS 7 Advanced Process Library (APL) with technological blocks and faceplates for device-specific functions of the SITRANS field devices.

Benefits

The SITRANS Library allows you to easily operate all device functions, such as the dosing of the SITRANS F M MAG6000, in a single faceplate. It also supports operator control and monitoring via Touch Panels as well as the integration of SIMATIC S 7 applications (only SITRANS F M MAG6000). The SITRANS Library is based on the modern design of the Advanced Process Library (APL). Together with the APL, the SITRANS Library enables you to create harmonic overall solutions with a consistent look & feel and optimum use of the functions of the SITRANS field devices in many industries.

It helps accelerate the engineering process, reduces the time-to-market, and simplifies process control. In addition, operator functions (such as "dosing") and process-related diagnostic information (such as empty pipe detection and flow direction) are provided.

Note:

SITRANS Library can only be used in combination with SIMATIC PCS 7 V8.0 or higher.

Application

The SITRANS Library is best used in combination with SIMATIC PCS 7 and SITRANS field devices.

A current list of SITRANS field devices and the supported SIMATIC PCS 7 versions is available at
https://support.industry.siemens.com/cs/ww/de/view/85285872

The SITRANS Library can be used for all core sectors of the process industry. These are:

- Chemical industry
- Pharmaceutical industry
- Water and wastewater
- Glass and solar
- Oil & gas
- Food and beverage industry
- Minerals and mining

Design

The product structure is geared toward the operational environment in the SIMATIC PCS 7 process control system. Consequently, SITRANS Library is offered in the form of an engineering component:

- SITRANS Library engineering software with engineering license
- SITRANS Library Runtime license for one automation project (SIMATIC PCS 7 automation systems of all designs and S7-300 controllers)

The SITRANS Library product component enables you to perform configuration work on a SIMATIC PCS 7 engineering station.

The SITRANS Library product component allows you to run blocks from a library on an automation system.

When using function blocks from SITRANS Library in SIMATIC PC 7 automation systems, please note that SIMATIC PCS 7 AS Runtime POs are also booked.

Function

SITRANS Library for SIMATIC PCS 7/SIMATIC S7

Sublibrary for the functional expansion of the SIMATIC PCS 7 Advanced Process Library with:

- Function blocks and faceplates for SITRANS field devices
- Function blocks and faceplates for SITRANS field devices for S7-400 and SIMATIC S7-300 with WinCC

The function blocks are configured in CFC.

Operator control and monitoring from a panel is configured with the panel interface blocks for the SITRANS F M MAG 6000 DP. Taking operating rights and hierarchical operating concepts (multi-control room operation) into consideration, the technological function can then be operated from both an operator station and a Touch Panel.

For detailed information on which field devices, which systems and system versions are supported as well as on the free download, see:

https://support.industry.siemens.com/cs/ww/de/view/85285872

Selection and ordering data	Article No.
SITRANS Library Block library for SIMATIC PCS 7 as of V8.0 and SIMATIC S7 with function blocks and faceplates as well as electronic documentation Engineering software, software class A, two languages (English, German), can be run under the following operating systems: • Windows XP Professional 32 bit • Windows 7 Ultimate 32/64 bit • Windows Server 2003 R2 Standard 32-bit • Windows Server 2008 R2 Standard 64-bit Engineering license for one customer plant Type of delivery: free download	**7MP2990-0AA00**

© Siemens 2020

Overview

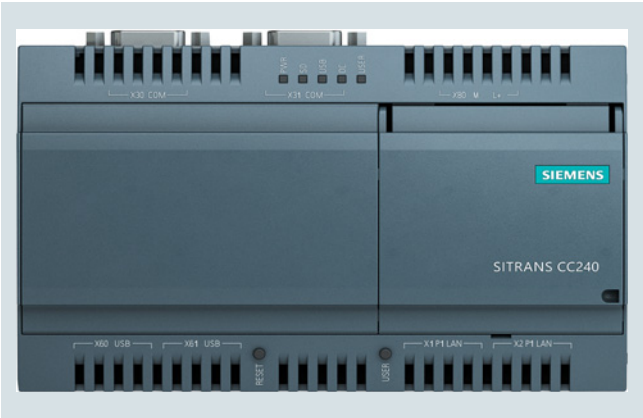

SITRANS CC240 is the industrial gateway connecting HART devices (via SITRANS MX300 multiplexer) to the IT environment.

Benefits

- Reads out data from HART devices, including versions 5, 6, and 7.
- Reads data from existing installations or stand alone.
- Uses an onboard web application for configuration and asset monitoring purposes.
- Publishes data using OPC UA information model based on Namur Open Architecture.
- Publishes data to Siemens MindSphere using MindConnect Library.
- Publishes data via a .csv file export function.

Application

When used in combination with SITRANS MX300, SITRANS CC240 can:

- Establish a second data channel to existing installations to read out identification, diagnostic and configuration parameters.
- Provide data from process field devices to the IT environment using standard technologies such as OPC UA.
- Connect process field devices to Siemens Mindsphere, for example, to provide SITRANS store IQ with inventory management data.

© Siemens 2020

Technical specifications

SITRANS CC240	
Installation type/mounting (characteristics)	
Design	IoT Gateway, built-in unit
Processor	
Processor type	Intel Quark X1020, 400 MHz
Drives	
Hard disk	1x microSD card slot; populated with 32 GB SDHC hosting OS and application
Memory	
Type of memory	DDR3-SDRAM
Main memory	1 GB RAM
Capacity of main memory max.	1 GB RAM
Ambient conditions	
Ambient temperature during operation	0 ... 50 °C (32 ... 122 °F)
Relative humidity	Tested according to IEC 60068-2-78, IEC 60068-2-30
• Operation	5 ... 85 % at 30 °C (86 °F), (no condensation)
• Storage/transport	5 ... 95 % at 25 ... 55 °C (77 ... 131 °F), (no condensation)
Degree of protection	
• IP degree of protection	IP20
• IP degree of protection (at the front)	IP20
Design	
Dimensions (W x H x D)	144 x 90 x 53 mm (5.7 x 3.5 x 2.1 inch)
Material	
• Enclosure	• Plastic enclosure • Resistant to vibrations and shocks • High electromagnetic compatibility, suitable for industrial environments.
Interfaces	
Ethernet interface	2 x LAN 10/100 Mbps Ethernet interface (RJ 45)
Serial interface	• 1 x COM port RS 485, for connection to SITRANS MX300 multiplexor • Sub-D9 connected to X30 interface
Integrated Functions	
Monitoring functions	
• Temperature monitoring	No
• Watchdog	Yes
• Status LEDs	Yes
• Fan	No

EMC[1]	
Interference immunity against discharge of static electricity	• ± 4 kV contact discharge acc. to IEC 61000-4-2; • ± 8 kV air discharge acc. to IEC 61000-4-2
Interference immunity against high-frequency electromagnetic fields	
• Interference immunity against high frequency radiation	• 10 V/m for 80 ... 1 000 MHz, 80 % AM acc. to IEC 61000-4-3 • 3 V/m for 1.4 ... 2 GHz, 80 % AM acc. to IEC 61000-4-3 • 1 V/m for 2 ... 2.7 GHz, 80 % AM acc. to IEC 61000-4-3 • 10 V for 150 kHz ... 80 MHz, 80 % AM acc. to IEC 61000-4-6
Interference immunity to cable-borne interference	
• Interference immunity on supply cables	• ± 2 kV acc. to IEC 61000-4-4, burst • ± 1 kV acc. to IEC 61000-4-5, surge symmetric • ± 2 kV acc. to IEC 61000-4-5, surge asymmetric
• Interference immunity on signal cables > 30 m	± 2 kV acc. to IEC 61000-4-5, surge, length > 30 m
• Interference immunity on signal cables < 30 m	± 2 kV in accordance with IEC 61000-4-4, burst, length > 30 m
Interference immunity against voltage surge[2]	
• Asymmetric interference	± 2 kV acc. to IEC 61000-4-5, surge asymmetric
• Symmetric interference	± 1 kV acc. to IEC 61000-4-5, surge symmetric
Interference immunity to magnetic fields at 50 Hz	100 A/m; to IEC 61000-4-8
Emission of conducted and non-conducted interference	
• Interference emission via line/AC current cables	EN 61000-6-4:2007 +A1:2011
Supply Voltage	
Isolated power supply	24 V DC (9 ... 36 V)
Mains buffering	
• Mains/voltage failure stored energy time	5 ms
Certificates and approvals	
General	CE, UL, $_{C}UL_{US}$, KC
EMC	CE, EN 61000-6-4:2007 +A1:2011, EN 61000-6-2:2005, EN 61000-6-3:2007 +A1:2011, EN 61000-6-1:2007
Operating systems	
Operating system	Yocto Linux
Application	SITRANS CC240 software application

Note: Operating system and SITRANS CC240 software are preinstalled.

1) EMC standards meet immunity requirements for industrial environments.

2) Using an external surge arrestor is recommended. Please see SIMATIC IOT2040 Operating Instructions for more details: https://support.industry.siemens.com/cs/mdm/109741658?c=93713172491&lc=en-WW.

Selection and ordering data

	Article No.
SITRANS CC240 The Industrial gateway that connects up to 8 SITRANS MX300 with up to 64 HART field devices.	**7MP2200-1CC15-2AA0**

© Siemens 2020

Overview

SITRANS MX300 is a HART multiplexer for use with the industrial gateway SITRANS CC240. Used in combination, these devices can read and acquire data from HART networks of up to 64 instruments.

Benefits

- Connect up to 8 HART devices of revisions 5, 6, or 7, in any combination.
- Combine up to 8 SITRANS MX300 devices with one SITRANS CC240, using the backplane connection to conveniently read up to 64 HART devices
- Operate each channel selectively in slave mode (where there is an existing HART master) or in stand-alone mode (where there is no existing HART master), configurable using switches, 250 Ω for connection in series to the field devices or no load for the connection in parallel.
- Galvanically isolated channels allow the device to interface with different networks.
- Supports HART multidrop.
- Small footprint supports retrofitting of existing installations.

Application

When used in combination with SITRANS CC240, SITRANS MX300 can:

- Establish a second data channel for existing HART installations to read out identification, diagnostic and configuration parameters.
- Establish a physical connection to the HART device, ensuring proper handling of the HART communication protocol and avoid communication conflicts with additional HART masters that may be present on the 4 to 20 mA loop.

© Siemens 2020

Technical specifications

SITRANS MX300	
Installation type/mounting (characteristics)	
Mounting type	Rail mounting
Input current	
Current consumption (rated value)	10 mA (24 V)
Current consumption, max.	20 mA
Analog inputs	
Number of analog inputs	8
Permissible input current (destruction limit)	30 mA
Reverse polarity protection	Yes, for power supply, not applicable for HART inputs
Input ranges (rated values)	
0 ... 20 mA • Input resistance (0 ... 20 mA)	Yes 250 Ω, switchable
4 ... 20 mA • Input resistance (4 ... 20 mA)	Yes 250 Ω, switchable
Ambient conditions	
Ambient temperature during operation	-40 ... +50 °C (-40 ... +122 °F)
Horizontal installation	-40 ... +60 °C (-40 ... +140 °F)
Vertical installation	-40 ... +50 °C (-40 ... +122 °F)
Relative humidity	Tested according to IEC 60068-2-78, IEC 60068-2-30
• Operation	5 ... 80 % at 30 °C (86 °F) (no condensation)
• Storage/transport	5 ... 80 % at 25 ... 55 °C (77 ... 131 °F) (no condensation)
Design	
Dimensions (W x H x D)	144 x 90 x 53 mm (5.7 x 3.5 x 2.1 inch)
Weight	100 g (0.2 lb), without connectors
Material • Enclosure	• Plastic enclosure • Resistant to vibrations and shocks • High electromagnetic compatibility, suitable for industrial environments
Degree and class of protection • IP degree of protection • IP degree of protection (at the front)	 IP20 IP20
Cable length	
Shielded, max.	200 m
Electrical isolation	
Between the channels	Yes
Between the channels and backplane bus/RS 485	Yes
Between the channels and load voltage L+	Yes
Isolation tested	1 500 V DC/1 min., type test
EMC[1)]	
Interference immunity against discharge of static electricity	• ± 4 kV contact discharge acc. to IEC 61000-4-2 • ± 8 kV air discharge acc. to IEC 61000-4-2

SITRANS MX300	
Interference immunity against high-frequency electromagnetic fields • Interference immunity against high frequency radiation	 • 10 V/m for 80 ... 1 000 MHz, 80 % AM acc. to IEC 61000-4-3 • 3 V/m for 1.4 ... 2 GHz, 80 % AM acc. to IEC 61000-4-3 • 1 V/m for 2 ... 2.7 GHz, 80 % AM acc. to IEC 61000-4-3 • 10 V for 150 kHz ... 80 MHz, 80 % AM acc. to IEC 61000-4-6
Interference immunity to cable-borne interference • Interference immunity on supply cables	 • ± 2 kV acc. to IEC 61000-4-4, burst • ± 1 kV acc. to IEC 61000-4-5, surge symmetric • ± 2 kV acc. to IEC 61000-4-5, surge asymmetric
• Interference immunity on signal cables > 30 m	± 2 kV acc. to IEC 61000-4-5, surge, length > 30 m
• Interference immunity on signal cables < 30 m	± 2 kV in accordance with IEC 61000-4-4, burst, length > 30 m
Interference immunity against voltage surge	
Asymmetric interference	± 1 kV acc. to IEC 61000-4-5, surge asymmetric
Symmetric interference[2)]	± 1 kV acc. to IEC 61000-4-5, surge asymmetric
Interference immunity to magnetic fields at 50 Hz	100 A/m; to IEC 61000-4-8
Emission of conducted and non-conducted interference	
Interference emission via line/AC current cables	EN 61000-6-4:2007 +A1:2011
Supply voltage	
Isolated power supply	24 V DC (9 ... 35 V) via backplane connector (limit 35 V)
Rated value	24 V DC
Permissible range, lower limit	9 V DC
Permissible range, upper limit	35 V DC
Reverse polarity protection	Yes
Certificates and approvals	
General	• CE • $_{C}UL_{US}$ (in preparation)
EMC	CE, EN 61000-6-4:2007 +A1:2011, EN 61000-6-2:2005, EN 61000-6-3:2007 +A1:2011, EN 61000-6-1:2007
Communication	• 8 x 4/20 mA HART input • 1 x RS 485 interface via backplane connector

1) EMC standards meet immunity requirements for industrial environments

2) If there are voltage peaks on the power supply lines, use a protective device such as a varistor (MOV) UMOV = Urated x 1.2 (BLITZDUCTOR BVT AVD 24 (918 422) or compatible).

Selection and ordering data

	Article No.
SITRANS MX300 HART multiplexer, 8 channels to connect up to 8 HART devices, 24 V DC supply voltage, rail mounting.	**7MP2200-1AD10-2AA0**

© Siemens 2020

Overview

HART is a widely used communication standard for field devices. HART devices are specified by the FieldComm Group.

The HART standard expands the analog 4 to 20 mA signal to modulated, industry-tested, digital signal transmission.

Benefits

- Tried-and-tested analog measured value transmission
- Simultaneous digital communication with bidirectional data transfer
- Possibility to transfer multiple measured variables from a field device (e.g. diagnostics, maintenance and process information)
- Connection to higher-level systems such as PROFIBUS DP.
- Easy installation and commissioning

Benefits in connection with SIMATIC PDM

- Manufacturer-neutral operation of all HART devices through standardized parameter sets
- HART field devices described by HART DLL are integrated in SIMATIC PDM via the Fieldcomm catalog. HART-DD (Device Description) in SIMATIC PDM standardized, manufacturer-neutral and very widely used. Additional field devices are integrated in SIMATIC PDM via EDD (Electronic Device Description)
- Simple operation and commissioning of field devices, even in usage locations that are difficult to access
- Advanced diagnostics, evaluating and logging functions

Application

Devices can be connected in different ways:

- Through the distributed I/O
  - SIMATIC ET 200M, ET 200SP
  - SIMATIC ET 200iSP with the HART modules
  or with analog modules 4 to 20 mA and HART Handheld Communicator,
- via a HART modem with which a point-to-point connection between the PC or Engineering System and the HART device can be established
- via HART multiplexers which are contained in the HART server of the HCF.

Integration

Siemens field devices listed in this catalog for process automation that can be controlled with HART:

Measuring instruments for pressure

SITRANS P300

SITRANS P310

SITRANS P320

SITRANS P DS III

SITRANS P410

SITRANS P420

SITRANS P500

Measuring instruments for temperature

SITRANS TF

SITRANS TH300

SITRANS TH320

SITRANS TH420

SITRANS TR300

SITRANS TR320

SITRANS TR420

SITRANS TW

Flow meters

SITRANS FM MAG 5000

SITRANS FM MAG 6000 19" / IP67

SITRANS FM MAG 6000 I / I Ex

SITRANS FM TRANSMAG 2

SITRANS FC MASS 6000 19" / IP67 / Ex d

SITRANS FC FCT030

SITRANS FS FST030

SITRANS FUS060

SITRANS FX300

SITRANS FX330

Level meters

SITRANS Probe LR

SITRANS Probe LU

SITRANS LUT400

SITRANS Probe LU240

SITRANS LR200

SITRANS LR250

SITRANS LR260

SITRANS LR460

SITRANS LG 240 / LG 250 / LG 260 / LG270

Electropneumatic positioners

SIPART PS2

Power supply units and isolation amplifiers

SITRANS I

© Siemens 2020

Overview

Today, distributed automation solutions based on open fieldbuses are standard in many areas of the manufacturing industry and in process engineering. It is only with fieldbuses that the functional benefits of digital communication can be put to full use, e.g. better resolution of measured values, diagnostics options and remote parameterization.

Today, PROFIBUS is the most successful open fieldbus with a large installed base for a wide range of applications. Standardization according to IEC 61158 / EN 50170 provides you with future protection for your investment.

Benefits

- Fully modular system, from the sensor through to the control level, permits new plant concepts
- Problem-free exchangeability of field devices, including from different manufacturers, that comply with the standard profile
- Networking of transmitters, valves, actuators, etc.
- Implementation of intrinsically safe applications through use of the field bus in hazardous areas
- Easy installation of 2-wire cables for joint power supply and data transfer
- Reduced cabling costs through savings of material and installation time
- Reduced configuration costs through central, simple engineering of the field devices (PROFIBUS PA and HART with SIMATIC PDM, also with multi-vendor support)
- Fast and error-free installation
- Lower service costs thanks to simpler wiring and plant structure plus extensive diagnostics options
- Greatly reduced commissioning costs through simplified loop check
- Scaling/digitizing of the measured value in the field device already, hence no rescaling necessary in SIMATIC PCS 7

Application

PROFIBUS is suitable for fast communication with distributed I/O (PROFIBUS DP) in production automation as well as for communication tasks in process automation (PROFIBUS PA). It is the first fieldbus system that meets the demands of both areas with identical communication services.

The transfer technology of PROFIBUS PA is tailored to the requirements of the process industry. The standardized communications services guarantee interoperability between multi-vendor field devices and remote configuration of the field devices during operation.

With SIMATIC PDM (Process Device Manager), a universal tool that is not manufacturer-specific and is used for configuring, parameterizing, commissioning and diagnosing intelligent process devices on PROFIBUS, a variety of process devices of different manufacturers can be configured using a uniform graphic user interface.

PROFIBUS PA can be used both in standard environments and in hazardous areas. For use in hazardous areas, PROFIBUS PA and all connected devices have to be designed with type of protection Ex [i].

The uniform protocol of PROFIBUS DP and PROFIBUS PA enables the linking of both networks and thus the combination of timing performance and intrinsically safe transmission technology.

Function

PROFIBUS PA expands PROFIBUS DP with process-level components for direct connection of actuators and sensors. With PROFIBUS PA, the RS 485 transmission method is replaced by a different transmission method optimized for intrinsically safe applications. Both methods are standardized internationally in IEC 61158.

PROFIBUS PA uses the same communication protocol as DP; communication services and frames are identical.

With PROFIBUS PA, the information and energy supply for supplying the field devices can be conducted via a 2-wire cable.

Integration

Siemens field devices for process automation listed in this catalog that can be controlled with PROFIBUS:

PROFIBUS PA

Measuring instruments for pressure
SITRANS P300
SITRANS P DS III
SITRANS P410

Measuring instruments for temperature
SITRANS TH400

Flow meters
SITRANS FM MAG 6000 19" / IP67
SITRANS FM MAG 6000 I / I Ex
SITRANS FM TRANSMAG 2
SITRANS FC MASS 6000 19" / IP67 / Ex d
SITRANS FUS060

Level meters
Pointek CLS 200
Pointek CLS 300
SITRANS Probe LU
SITRANS LR200
SITRANS LR250
SITRANS LR260
SITRANS LR460

Electropneumatic positioners
SIPART PS2

Acoustic sensors for pump monitoring
SITRANS DA400

PROFIBUS DP

Measuring instruments for temperature
SITRANS TO500

Flow meters
SITRANS FM MAG 6000 19" / IP67
SITRANS FM MAG 6000 I
SITRANS FC MASS 6000 19" / IP67
SIFLOW FC070 (via ET 200M)

Level meters
HydroRanger 200
MultiRanger 100/200
SITRANS LU 01, LU 02, LU 10

Acoustic sensors for pump monitoring
SITRANS DA400

© Siemens 2020

Overview

Today, distributed automation solutions based on open field buses are state-of-the-art in large areas of the process engineering industry. It is only with fieldbuses that the functional benefits of digital communication can be put to full use, e.g. better resolution of measured values, diagnostics options and remote parameterization.

Like PROFIBUS PA, the FF bus (FOUNDATION Fieldbus) is an open field bus with a large installed base for a wide range of application. Standardization according to IEC 61158 / EN 50170 provides you with future protection for your investment.

Benefits

- A uniform modular system from the sensor to the connection to the control level enables new plant concepts
- Problem-free exchangeability of field devices, including from different manufacturers, that comply with the standard profile
- Networking of transmitters, valves, actuators, etc.
- Implementation of intrinsically safe applications through use of the field bus in hazardous areas
- Easy installation of 2-wire cables for joint energy supply and data transfer
- Reduced cabling costs through savings of material and installation time
- Reduced configuration costs through central, simple engineering of the field devices, also cross-vendor
- Fast and error-free installation
- Lower service costs thanks to simpler wiring and plant structure plus extensive diagnostics options
- Greatly reduced commissioning costs through simplified loop check
- Scaling/digitizing of the measured values in the field device already, hence no rescaling necessary in SIMATIC PCS 7

Application

The transfer technology of the FOUNDATION Fieldbus is tailored to the needs of the process industry. Interoperability between field devices from different manufacturers and remote parameterization of the field devices during operation are guaranteed by the standardized communication services.

FOUNDATION Fieldbus can just as readily be used in standard environments as in hazardous areas. For use in hazardous areas, FOUNDATION Fieldbus and all connected devices have to be designed with type of explosion protection Ex [i].

Function

FOUNDATION Fieldbus enables the direct connection of actuators and sensors.

FOUNDATION Fieldbus is based on a transfer optimized for intrinsically safe application. The transfer technology is internationally standardized in IEC 61158.

For FOUNDATION Fieldbus the data and energy supply for the field devices can be directed through a 2-wire cable.

FOUNDATION Fieldbus enables device-to-device communication ("control in the field").

Integration

Siemens field devices for process automation which are listed in this catalog and can be controlled using Foundation Fieldbus:

Measuring instruments for pressure

SITRANS P300

SITRANS P DS III

SITRANS P410

Measuring instruments for temperature

SITRANS TH400

Electropneumatic positioners

SIPART PS2

Flow meters

SITRANS FM MAG 6000

SITRANS FM MAG 6000 I / I Ex

SITRANS FC MASS 6000

Level meters

SITRANS LR250

© Siemens 2020

Notes

© Siemens 2020

9/2 Siemens Digital Enterprise Services
9/3 Lifecycle Services
9/4 Calibration Services
9/5 Remote Services
9/8 Lifecycle Management Suite
9/10 Inventory Baseline Services
9/11 Lifecycle Information Services
9/13 Managed System Services
9/14 Preventive System Analysis
9/15 Asset Optimization Services
9/17 Lifecycle Service Contracts

© Siemens 2020

Overview

Siemens Digital Enterprise Services

As an industry partner, we offer you an unrivaled range of services and support based on our extensive technology and industry know-how. With our offer, you gain a high level of reliability and shape the digital future of your company. Our services cover the complete life cycle of your machines and plants and help you to increase their profitability and efficiency and to take advantage of the opportunities for digitalization while simultaneously reducing your total cost of ownership.

Learn more about Siemens Digital Enterprise Services online at:
https://new.siemens.com/global/en/products/services/industry.html

© Siemens 2020

Overview

The following section gives an overview of the specific Lifecycle Services for process instrumentation – a component of Siemens Digital Enterprise Services.

Lifecycle Services contract for process instrumentation

When it comes to making operating costs predictable and optimizing them continuously, protecting investments and thus ensuring plant availability, the key criterion for success is the serviceability of your instrumentation. That is the reason for our reactive, proactive and preventive Lifecycle Services for process instrumentation, which ensure the serviceability of instruments in modern plants at optimized costs throughout their life cycle. These individual services can be easily integrated on a product-specific basis into service programs or even into customized service contracts that are tailored to your specific requirements.

The standardized, yet flexible structure of our services for process instrumentation provides a future-proof basis for:

- Protection of your investment
- Assurance of plant availability
- Long-term predictability of maintenance costs
- Cost-optimized modernizations

More information

More information is available on the Internet at:
http://www.siemens.com/pils

© Siemens 2020

Overview

Our comprehensive Calibration Services offer a large spectrum of calibration and verification services that assure maximum reliability and precision for your process measuring equipment.

Calibration services performed at the factory (off-site)

Make sure that your measuring instruments conform to industry standards and maintain operational readiness during the lifecycle. Our accredited laboratory is in accordance with ISO 17025 and is fully equipped with state-of-the-art precision instruments which offer a wide range of calibrations for dimensioning, electronic and process devices.

Calibration services provided on site (on-site)

Timely maintenance and calibration of measuring instruments is critical during the operating phase of the plant life cycle. We can also supply our calibration services directly to your facility in order to ensure that your processes do not suffer from extended downtimes.

	Pressure	Temperature	Flow rate	Weighing technology
Off-site calibration according to ISO 9001	✓	✓	✓	
Off-site calibration according to ISO 17025	✓	✓	✓	
Internal state calibration (cold water, flow for heat/cold quantity)	✓	✓		✓
On-site calibration according to ISO 9001			✓	

Benefits

Reasons for calibration of field instruments

- Periodic calibration for quality assurance according to ISO 9000
- Compliance with standards, guidelines or legal requirements
- Verification of custody transfer measurements (cold water, flow for heat/cooling quantity)
- Early detection of errors in measuring equipment
- Determination of the operational safety of the measuring equipment

More information

More information is available on the Internet at:
http://www.siemens.com/piscv

Re-calibration ordered in three simple steps

An order is initiated online on the WebLogX SIRENT web page. Use of the WebLogX "SIRENT Instrument and Tools Management" home page requires a personal login.
Register on the following website:

https://www.weblogx.siemens.com/tools/DesktopDefault.aspx

On this web page, you will find the required calibration questionnaire as well as additional information.

1. Fill out the calibration questionnaire

- For flow meters: Send the completed calibration questionnaire to the following e-mail address:
  sirent-calibration.flow.industry@siemens.com
- For pressure, temperature, vacuum, relative humidity, dew point temperature, conductivity, vibration, sound, speed, send the completed form to the following e-mail address:
  sirent-calibration.industry@siemens.com

2. SIRENT- quotation

Shortly after you have submitted the calibration questionnaire, you will receive a quotation with all the necessary details.

3 . Shipping

Send us your flow meter with the decontamination declaration to the following address:

Siemens AG
SIRENT calibration service
c/o HDS GmbH
Gundelfinger Str. 20
90451 Nuremberg
Germany

© Siemens 2020

Overview

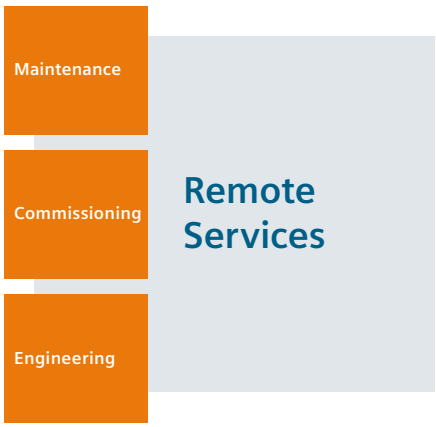

Remote Services for process instrumentation

The engineering, commissioning and maintenance of automation systems involves significant amounts of both time and personnel resources, regardless of whether in a hazardous area or not. It is precisely these service tasks which can be optimally supported and even carried out remotely using powerful, modern communication media. It is imperative here that the growing IT security requirements are met and that remote activities can be accounted for.

With our offering of platform-based remote services, our customers around the world can access centrally available expert knowledge of product manufacturers 24/7.

The "Remote Access Services" (so-called "connectivity packages") are required once per installation and enable communication between the customer system and Siemens IT infrastructure (cRSP = common Remote Service Platform); they consist of different hardware and software components.

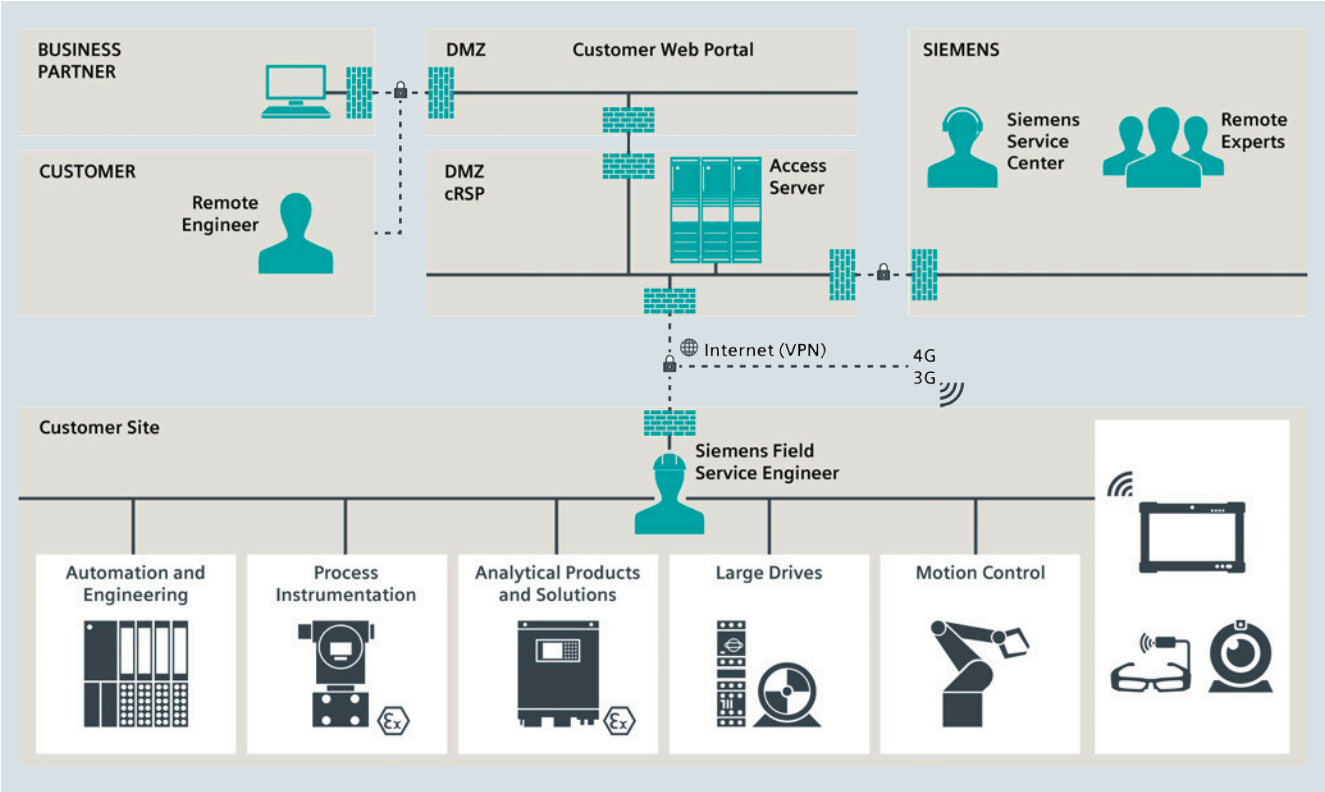

In the context of remote services, a distinction is made between "Remote Desktop Sharing" and "Remote Assisted Collaboration".

Remote Desktop Sharing allows the Siemens expert to access the configuration software and via this, to access the connected systems and field devices.

Remote Assisted Collaboration supports the service technician on site with a Siemens expert from a distance using the **SIPIX SD Service Tablet**. Video images can be transmitted and communication via audio and live chat is possible via an independent VPN channel. In addition, the use of **data goggles** allows hands-free work on field devices.

Benefits

- Secure remote connection of your automation system to the SIMATIC TechSupport IT Infrastructure
- Global, direct connection to the network of the Siemens system experts
- Provision of remote IT infrastructure including support and maintenance
- Complete transparency due to central administration of all system accesses
- Compatible with generally valid Industrial Security concepts
- TÜV/CERT certification of Siemens cRSP infrastructure

© Siemens 2020

Selection and ordering data

	Article No.
SIPIX Service Plattform Services Remote Services for the SIPIX-SD/MO platform Remote Services: • Remote Service support during office hours Monday to Friday from 8:00 a.m. to 4:00 p.m. for 1 year. • The number of requests is limited to 1 remote service procedure. • 1 remote service procedure applies to 1 field device. • SIPIX service agreements: None • Service general conditions: A secure VPN channel can be used during remote service to support a service employee by remote access. Note Make sure that the necessary prerequisites for remote access by Siemens are available. Contact your Siemens sales office if this is not the case.	
Remote services for field devices – Reactive Services 1 • Reactive 1 (1 customer case)	**9LA1110-1PB00-0AA0**
Remote services for field devices – Reactive Services 5 • Reactive 5 (5 customer cases)	**9LA1110-1PC00-0AA0**
Digital Service Tool for the process industry SIPIX MO Windows 10 IoT, 8 GB RAM, 128 GB SSD, 2 MP/5 MP camera, WLAN • Scope of delivery: Docking station, shoulder strap • Configuration level: MO BASIC; Prepared for connection to cRSP remote platform	
SIPIX MO ZN • BT 4.0, IP65 approval: Non-hazardous area	**9LA1110-6AB00-0AB0**
SIPIX MO Z2 • BT 4.0, IP65, RFID HF-Reader internal, approval: ATEX Zone 2/22, IEC Ex Zone 2/22, UL Class I Div 2	**9LA1110-6AC00-0AB0**
SIPIX MO Z1 • BT 4.1, IP65, RFID HF-Reader internal, approval: ATEX Zone 1, IEC Ex Zone 1, UL Class I Div 1	**9LA1110-6AD00-0AB0**

	Article No.
Digital Service Tool for the process industry SIPIX SD Windows 10 IoT, 8 GB RAM, 128 GB SSD, 2 MP/5 MP camera, WLAN Scope of delivery: Hard shell case with insert, docking station, shoulder strap Configuration level: SD BASIC; Connection to cRSP remote service platform, secure remote access (IT security according to ISO 27001/CERT), SIPIX RC collaboration software pre-installed with AR features, secure file transfer without cloud caching during remote access, SIMATIC PDM pre-installed	
SIPIX SD ZN • BT 4.0, IP65 approval: Non-hazardous area	**9LA1110-6AF00-0AD0**
SIPIX SD Z2 • BT 4.0, IP65, RFID HF-Reader internal, approval: ATEX Zone 2/22, IEC Ex Zone 2/22, UL Class I Div 2	**9LA1110-6AG00-0AD0**
SIPIX SD Z1 • BT 4.1, IP65, RFID HF-Reader internal, approval: ATEX Zone 1, IEC Ex Zone 1, UL Class I Div 1	**9LA1110-6AH00-0AD0**
Digital Service Tool for the process industry SIPIX SD100 Windows 7 Prof, 8 GB RAM, 128 GB SSD, 2 MP/5 MP camera, WLAN, BT 4.0, IP65, LTE card (EU), 1D/2D imager approval: ATEX Zone 2/22, IEC Ex Zone 2/22, UL Class I Div 2 Scope of delivery: • Docking station, shoulder strap Configuration level: • Advanced PA • Pre-installed software for service of the field devices: • Supplied hardware: - Connection to cRSP Remote Service platform - SIMATIC PDM - Siwatools - Additional software for field device technologies • Supplied hardware: - Desktop docking station - 4G/LTE module (EU)	**9LA1110-6AE02-0AC0**
4G/LTE module (EU) SIPIX SD/MO For devices with general or ATEX II 3G/3D (Class I Div. 2) approval	**9LA1110-6AA00-1AA0**
4G/LTE module (USA) SIPIX SD/MO For devices with general or ATEX II 3G/3D (Class I Div. 2) approval	**9LA1110-6AA00-2AA0**
RFID UHF module SIPIX SD/MO For devices with general or ATEX II 3G/3D (Class I Div. 2) approval	**9LA1110-6AA00-3AA0**
Docking Station SIPIX SD/MO For devices with general or ATEX II 3G/3D (Class I Div.2) approval (use only in non-hazardous area)	**9LA1110-6AA00-4AA0**
Docking Station SIPIX SD/MO For devices with ATEX II 2G (Class I Div.1) approval (use only in non-hazardous area)	**9LA1110-6AA00-5AA0**

© Siemens 2020

	Article No.
2-way battery charging station SIPIX MO/SD For charging 2 rechargeable batteries (Input voltage: 10 VDC ... 20 VDC (50 W); charging display via LED and buzzer, 2 connected charging stations can be supplied with one power supply unit	**9LA1110-6AA00-6AA0**
SIPIX SD/MO standard rechargeable battery For devices with ATEX II 3G/3D (Class I Div.2) approval; With lithium-polymer rechargeable battery 7.4 V/5 300 mAh (39.22 Wh), replaceable during operation Note The rechargeable battery must only be replaced outside of hazardous areas.	**9LA1110-6AA00-7AA0**
SIPIX SD/MO long life rechargeable battery For devices with ATEX II 3G/3D (Class I Div.2) approval; With lithium-polymer rechargeable battery 7.4 V/10 280 mAh (76.07 Wh), replaceable during operation Note The rechargeable battery must only be replaced outside of hazardous areas.	**9LA1110-6AA00-8AA0**
EPSON Moverio BT-300 augmented-reality data goggles Scope of delivery: • Headset • Controller • Charging adapter • USB cable • Light protector • Lens holder • Nose pads • Headphones • Carrying case	**9LA1110-6AA00-0BA0**
Shoulder strap for SIPIX SD/MO	**9LA1110-6AA00-2BA0**
Remote services for the SIPIX SD/MO platform Remote Services Service general conditions: A secure VPN channel can be used during remote service to support a service employee by remote access.	
Tool and operating services for the Siemens process industry Xpert service device (SIPIX SD100), Siemens remote service platform (cRSP), augmented collaboration software	**9LA1110-1PA00-0AA1**
SIPIX service agreements: Service Level Starter MO - 2 years	**9LA1110-1PA10-0AA0**
SIPIX service agreements: Service Level Starter SD - 2 years	**9LA1110-1PA20-0AA0**
SIPIX service agreements: Service Level Starter MO - 5 years	**9LA1110-1PA30-0AA0**

More information

More information is available online at:
http://www.siemens.com/siremote

© Siemens 2020

Overview

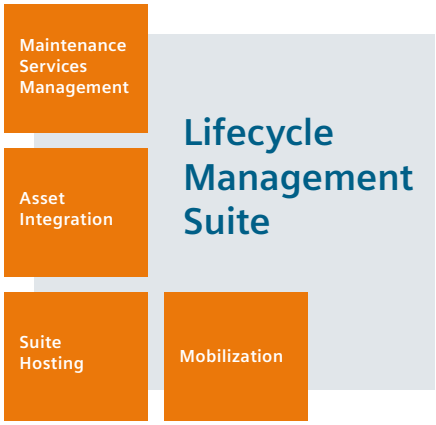

The Lifecycle Management Suite optimizes plant maintenance with regard to the planning, execution and documentation of all service activities. The pre-configured, COMOS MRO-based system provides standard operating procedures (SOP) which are assigned to the SIMATIC PCS 7 system components already entered.

"Mobilization" module

In the "Mobilization" module, an initial setup is carried out for detailed information on the products and systems used, as well as their lifecycle status and the existing maintenance processes and plant documentation. The execution of this module is a prerequisite and therefore an integral component for all further configuration modules.

"Suite Hosting" module

This module contains the COMOS MRO Hosting – cloud-based or on-premises – with support and Software Update Service.

- Option: Integration of the SIPIX Service Tablet

"Asset Integration" module

In addition to the "Suite Hosting" module, this module includes the integration of the installed base (iBase), the maintained product master data, and the availability of obsolescence information.

- Option: Analyzer integration (Autom. Check points).
- Reports: Lifecycle Information Services | Trends

"Maintenance Services Management" module

In addition to the "Asset Integration" module, this module contains the integration of standard operation procedures for Lifecycle Services, for instance, service checkpoints that have to be performed regularly. Together with the imported project data and parts lists from SIMATIC PCS 7 installations, service work schedules can be automatically generated on this basis.

- Reports: Service SOP Reports | Trends

Benefits

- Pre-configured CMMS system with assets and service checkpoints entered
- Consistent data maintenance through integration in a data platform creates transparency and traceability
- Mobile data access on site with maintenance information and documentation in real time

Selection and ordering data

	Article No.
COMOS MRO software Use over cloud access for a period of 1 year. Administration of customer-specific software instances including software update and technical support/subscription cycle (Mon.-Fri. 8.00-17.00, CET), except public holidays. • 10 h technical support/subscription cycle • 1x floating license for 3 authorized named users within the EU • Mobilization Suite Hosting (remote) has to be ordered, see options.	**9LA1110-5CA00-0AA0**
With Asset Management functions • 15 h technical support/subscription cycle • 1x floating license for 3 authorized named users within the EU • 10x obsolescence Checks/ subscription cycle • Installed Base integration • Product Data-integration according to tech. options; in the first year, Mobilization must be ordered as an option for the module.	**9LA1110-5CA00-0BA0**
With Maintenance Management functions • 20 h technical support/ subscription cycle • 1x floating license for 3 authorized named users within the EU • Installed Base integration • Product Data integration • Product Data integration according to tech. options; in the first year, Mobilization must be ordered as an option for the module.	**9LA1110-5CA00-0CA0**
Product Data integration SIMATIC PCS 7 for SIMATIC PCS 7 ≥ V8.x Requirement: None Extension package for Suite Hosting	**9LA1110-5CC00-1AA0**
iBase integration SIMATIC PCS 7 (interface SAS DC) Requirement: Product Data integration SIMATIC PCS 7 is available. Extension package for Suite Hosting	**9LA1110-5CC00-1AB0**
Service Standards integration SIMATIC PCS 7 Requirement: Product Data integration SIMATIC PCS 7 Extension package for Asset integration	**9LA1110-5CA00-1AC0**
10x obsolescence checks Requirement: None Extension package for Suite Hosting and option for Maintenance Service Management	**9LA1110-5CA00-1AD0**
System Status integration (analyzer results) Requirement: Service Standards integration SIMATIC PCS 7 Option for Asset Integration and Maintenance Service Management	**9LA1110-5CA00-1AE0**
Mobilization "Suite Hosting" (remote)	**9LA1110-5CA00-1CA0**
Mobilization "Asset Integration" (remote)	**9LA1110-5CA00-1CB0**
Mobilization "Maintenance Services Management" (remote)	**9LA1110-5CA00-1CC0**

© Siemens 2020

	Article No.
Additional 1 floating License COMOS MRO For 3 Authorized Named Users within the EU Expansion for Suite Hosting, Asset Integration, Maintenance Service Management	**9LA1110-5CA00-1BA0**
Additional 1 Authorized Named User For 1 existing floating license COMOS MRO user within the EU Expansion for Suite Hosting, Asset Integration, Maintenance Service Management	**9LA1110-5CA00-1BB0**
Additional 10-hour technical support/subscription cycle	**9LA1110-5CA00-1CD0**
Integration of COMOS Mobile Operations (1 Authorized Named User) within the EU Provision of an app for integration of a mobile device for on-site service personnel. This must be ordered separately for each additional user (USR). Extension package for Suite Hosting and Maintenance Service Management.	**9LA1110-5CA00-1MA0**

More information

More information is available online at:
http://www.siemens.com/lms

© Siemens 2020

Overview

It is essential to make the right decisions when planning modernizations or when budgeting for necessary maintenance measures. The basis for such decisions is an in-depth knowledge of the installed system base. This requires:

- Uniform and complete inclusion of all installed automation components
- Information collection using the least possible time and money.
- Documentation of results in standardized reports

With its Inventory Baseline Services, Siemens offers modern data-driven services that use new methods and tools to help you plan maintenance of machines and plants even more efficiently.

Making an inventory gives you an overview of the currently installed plant equipment and the spare parts in stock. The inventory results serve as a decision-making aid when planning future measures for maintenance and modernization.

Inventory Baseline Services offer transparency with regard to the installed automation components of machines and plants and provide the data for additional Lifecycle Services such as SIMATIC System Audit, Lifecycle Information Services and Asset Optimization Services.

Benefits

- Cost-efficient and standardized inventory of all of the installed automation components
- Valid decision-making aid for planned plant expansions, modernizations as well as for preparation for updates/upgrades
- Solid basis for planning and implementation of other Lifecycle Services

Selection and ordering data

	Article No.
Inventory Baseline Service for process instrumentation	
Complete service by headquarters only in Germany for devices for process instrumentation • Automatic collection of data • Onsite • Manual recording of unconfigured devices for process instrumentation • Adding manually recorded devices to the Inventory Tool • Data evaluation • Report creation • Adding the data to the Siemens database (GSP) • Consultation with the customer • Travel expenses are not included in the price	**9LA1110-8AJ00-1AB0**
• Provision of the data according to specifications in the manual • Evaluation of the collected data • Report creation • Saving data in the Siemens database (GSP) • Return of the report to the customer with discussion of the report • Travel expenses are not included in the price	**9LA1110-8AJ00-2AB0**

More information

More information is available online at:
http://www.siemens.com/ibs

© Siemens 2020

Overview

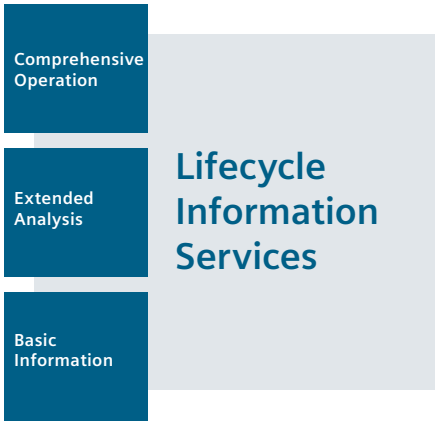

For planning your maintenance strategy,
Lifecycle Information Services periodically provide you with detailed information on the product life cycle of the utilized components. The Lifecycle Information Services have a modular structure so that you need only request information that you actually require. Each of the following three methods returns a plant-specific report as result. You can decide for yourself how comprehensive you want this report to be.

Basic Information

Product Lifecycle Status focusing on analysis of functional obsolescence.

Extended Analysis

"Basic Information" module and analysis of product-related statistical mean time between failures (MTBF).

Comprehensive Operation

"Extended" module supplemented with plant-specific information on updates/upgrades and general recommendations.

Benefits

- Proactive, periodic service information for reduction of obsolescence risks
- Assurance of plant availability through specific service recommendations
- Prevention of unscheduled downtimes or cost-intensive supply bottlenecks
- Evaluation of new technological innovations

© Siemens 2020

Selection and ordering data

	Article No.
Lifecycle Information Services Basic	
Based on data provided by the customer an analysis of the equipment is conducted. The result of the analysis is a report which includes: current delivery capacity, availability forecast, technical evaluation of results	
• ≤ 50 different products	
• Small systems	
- Single report	**9LA1110-8AG10-1AA0**
- Cyclic report, annual [1]	**9LA1110-8AG10-1AB0**
- Cyclic report, semi-annual [1]	**9LA1110-8AG10-1AC0**
- Cyclic report, quarterly [1]	**9LA1110-8AG10-1AD0**
• ≤ 150 different products	
• Medium systems	
- Single report	**9LA1110-8AG10-1BA0**
- Cyclic report, annual [1]	**9LA1110-8AG10-1BB0**
- Cyclic report, semi-annual [1]	**9LA1110-8AG10-1BC0**
- Cyclic report, quarterly [1]	**9LA1110-8AG10-1BD0**
• ≤ 300 different products	
• Large systems	
- Single report	**9LA1110-8AG10-1CA0**
- Cyclic report, annual [1]	**9LA1110-8AG10-1CB0**
- Cyclic report, semi-annual [1]	**9LA1110-8AG10-1CC0**
- Cyclic report, quarterly [1]	**9LA1110-8AG10-1CD0**
Lifecycle Information Services Extended	
Based on data provided by the customer an analysis of the equipment is conducted. The result of the analysis is a report which includes: current delivery capacity, availability forecast, MTBF analysis, technical evaluation of results	
• ≤ 50 different products	
• Small systems	
- Single report	**9LA1110-8AG10-2AA0**
- Cyclic report, annual [1]	**9LA1110-8AG10-2AB0**
- Cyclic report, semi-annual [1]	**9LA1110-8AG10-2AC0**
- Cyclic report, quarterly [1]	**9LA1110-8AG10-2AD0**
• ≤ 150 different products	
• Medium systems	
- Single report	**9LA1110-8AG10-2BA0**
- Cyclic report, annual [1]	**9LA1110-8AG10-2BB0**
- Cyclic report, semi-annual [1]	**9LA1110-8AG10-2BC0**
- Cyclic report, quarterly [1]	**9LA1110-8AG10-2BD0**
• ≤ 300 different products	
• Large systems	
- Single report	**9LA1110-8AG10-2CA0**
- Cyclic report, annual [1]	**9LA1110-8AG10-2CB0**
- Cyclic report, semi-annual [1]	**9LA1110-8AG10-2CC0**
- Cyclic report, quarterly [1]	**9LA1110-8AG10-2CD0**

	Article No.
Lifecycle Information Services Comprehensive	
Based on data provided by the customer an analysis of the equipment is conducted. The result of the analysis is a report which includes: current delivery capacity, availability forecast, MTBF analysis, service information, technical evaluation of results	
• ≤ 50 different products	
• Small systems	
- Single report	**9LA1110-8AG10-3AA0**
- Cyclic report, annual [1]	**9LA1110-8AG10-3AB0**
- Cyclic report, semi-annual [1]	**9LA1110-8AG10-3AC0**
- Cyclic report, quarterly [1]	**9LA1110-8AG10-3AD0**
• ≤ 150 different products	
• Medium systems	
- Single report	**9LA1110-8AG10-3BA0**
- Cyclic report, annual [1]	**9LA1110-8AG10-3BB0**
- Cyclic report, semi-annual [1]	**9LA1110-8AG10-3BC0**
- Cyclic report, quarterly [1]	**9LA1110-8AG10-3BD0**
• ≤ 300 different products	
• Large systems	
- Single report	**9LA1110-8AG10-3CA0**
- Cyclic report, annual [1]	**9LA1110-8AG10-3CB0**
- Cyclic report, semi-annual [1]	**9LA1110-8AG10-3CC0**
- Cyclic report, quarterly [1]	**9LA1110-8AG10-3CD0**
Lifecycle Information Services Time Extension	**9LA1110-8AG10-8AA0**
Extension package for large systems (> 300 different products), plus 1 day for technical evaluation and recommendations	

[1] The contract is automatically extended for one more year unless it is canceled three months before expiration

More information

More information is available online at:
http://www.siemens.com/lis

© Siemens 2020

Overview

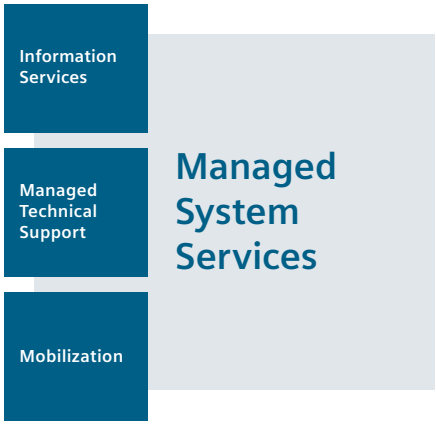

Managed System Services offer competent and efficient support through a dedicated support manager. This central contact person ensures an efficient exchange of information between all parties involved. The "Dedicated Support Manager" brings together, coordinates and prioritizes all activities, is familiar with the customer's plant, knows the maintenance processes and the installed base and, if necessary, uses remote access for diagnostics and troubleshooting purposes.

Benefits

- Quicker processing and resolution of complex support requests
- Simplification of requests by means of central coordination and an exclusive "incoming" channel
- Higher "first-time-fix-rate"
- Avoidance of expensive on-site service calls
- Greater transparency through active support management and regular status reports

Selection and ordering data

	Article No.
Managed System Services Extention Expansion of an existing Managed System Services contract by additional hours for the technical processing of service requests and coordination by the support manager. • Limited to 25 hours of support. • Subscription cycle, number of reports and access to online information system remain unchanged according to the Managed System Services package.	**9LA1110-1BL00**

More information

More information is available online at:
http://www.siemens.com/mss

© Siemens 2020

Preventive System Analysis

Overview

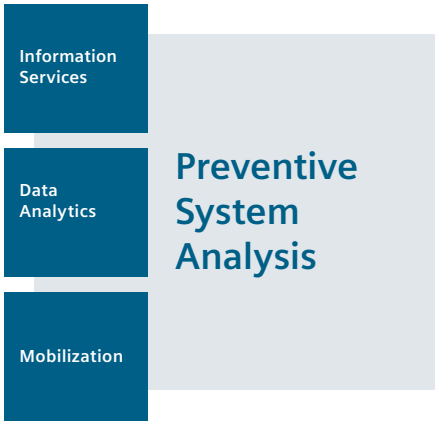

Preventive System Analysis identifies potential system risks and displays the plant situation transparently. Special software tools record extensive diagnostics data and system information which are in turn analyzed using algorithms. Professional evaluation of the results by our experts round off your SIMATIC PCS 7 system assessment. Regular evaluation of the system state, data-based inspections and automated weak-point analysis ensure optimal maintenance and avoid unplanned plant downtimes.

Benefits

- Fast data acquisition
- Intensive data analysis
- Transparent reporting

More information

More information is available online at:
http://www.siemens.com/psa

© Siemens 2020

Overview

High plant availability with optimal spare parts supply - Asset Optimization Services provide a structured and systematic procedure for the holistic optimization of the supply of spare parts. The 4 phases of Asset Optimization Services are coordinated with one other but can also be used independently.

Phase I: Analysis

Determination of the current spare parts situation on site: availability, product life cycle, spare part delivery times

Phase II: Concept

The concept phase consists of an analysis of the actual requirements and the development of a spare parts concept.

Phase III: Implementation

Based on the results of the concept phase, the required warehouse structures, storage locations and spare parts are set up.

Phase IV: Operation

The optimized and continuous supply of spare parts is an essential contribution to high plant availability. Depending on the specific contractual agreements, cyclic inventory analysis and a regular exchange of information also take place.

Benefits

- Creates transparency about the actual spare parts requirements
- Ensures spare parts availability over the entire life cycle of the machine or plant and therefore fulfills an important prerequisite for improved serviceability
- Shift to external inventory keeping and continuous supply with necessary spare parts

Selection and ordering data

	Article No.
Asset Optimization Services Analysis (max. 100 article numbers) Based on the customer data provided, an analysis and a comparison between the plant and warehouse inventory. This includes the availability and the product lifecycle with discontinuations and delivery times of the respective products. The result of the analysis is a standardized, product-oriented report that is very important for warehouse optimization and maintenance.	**9LA1110-8AE10-1AA0**
Asset Optimization Services Concept (max. 3 days) Based on the results of the analysis phase, a detailed optimization plan is developed in collaboration with the customer. A risk assessment of the components can be performed in consultation with the customer. With this concept, optimized target stock can be determined. Identification of surplus stock and lack of spare parts. Recommendations for the next steps are given.	**9LA1110-8AE10-2AA0**
Asset Optimization Services implementation (for operation) Based on results of concept phase 9LA1110-8AE10-2AA0 and an individual quotation, optimization measures are implemented in a defined time frame. Objective: Create the basis for the Asset Optimization Services Operation.	**9LA1110-8AE10-3AA0**
Asset Optimization Services Operation spare parts supply Provision of a defined spare parts package based on an individual customer quotation. The spare parts are owned by Siemens. Service content is the supply of components in a defined delivery time and place of delivery for an agreed period of time. Cyclic and standardized analysis of the inventory to take into account the product life cycle.	**9LA1110-8AE10-4AA0**
Asset Optimization Services Operation spare parts management Management of a defined spare parts package based on an individual customer quotation. The spare parts are owned by the customer. Service content is the supply of components in a defined delivery time and place of delivery for an agreed period of time. Cyclic and standardized analysis of the inventory to take into account the product life cycle.	**9LA1110-8AE10-4BA0**
Asset Optimization Services Time Extension An additional 500 article numbers for the analysis of extensive stocks with more than 100 different article numbers can be ordered in packages of 500 article numbers.	**9LA1110-8AE10-8AA0**

© Siemens 2020

Asset Optimization Services

	Article No.
Asset Optimization Services Time Extension An additional 1 day for analysis and planning; This option can be ordered for a number of days, for example, for extensive planning (> 3 days) and on-site presentation of the analysis results.	**9LA1110-8AE10-8BA0**

More information

More information is available online at:
http://www.siemens.com/aos

© Siemens 2020

Overview

The service elements introduced in the preceding sections form the basis for customized SIMATIC PCS 7 Lifecycle Service Contracts. Additional specific contract parameters, so-called service KPIs (e.g. terms of payment) can be agreed upon individually. A prerequisite for entering into a Lifecycle Service Contract is detailed information on the installed system base.

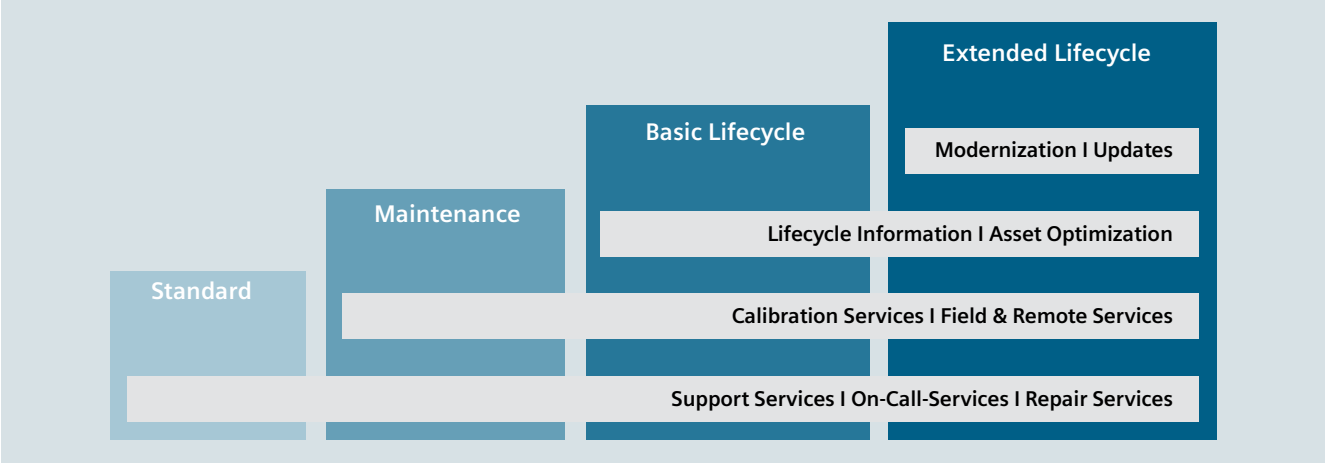

Typical characteristics of a Lifecycle Service Contract are:

- Standard - mainly contains reactive service elements, such as technical support, on-call or even repair services
- Maintenance - includes the "Standard" profile with added services such as preventive inspection and maintenance
- Basic Lifecycle - includes the "Maintenance" profile with added Lifecycle Information Services and Asset Optimization Services
- Extended Lifecycle - includes the "Basic Lifecycle" profile with added comprehensive modernizations as well as updates and upgrades

Long-term investment protection with predictable costs

A reactive service concept increases the risk of obsolescence – operating expenses and unplanned standstills can fluctuate and are hard to predict. The investment pressure increases until an upgrade becomes necessary. Long-term maintenance planning is extremely difficult, the risks are difficult to assess and the overall costs cannot be clearly calculated.

With a proactive service concept, however, the management of obsolescence risks and modernizations can be planned consistently. The continuous maintenance of the plant keeps the obsolescence risk low; the optimized costs for maintenance and modernization (OPEX) are mostly consistent and therefore predictable.

© Siemens 2020

Benefits

- Long-term investment protection
- Planning capability for modernization and maintenance costs at the time of the investment across the entire lifetime of up to 15 years (TCO - Total Cost of Ownership)
- Increased plant availability, for example, through guaranteed arrival times for service, secured spare part supply and preventive maintenance measures
- Ensure service capability through active obsolescence management for hardware and software components
- Securing system manufacturer know-how
- Professional project management from a single source for the entire subscription cycle

More information

More information is available online at:
http://www.siemens.com/pcs7lcs

© Siemens 2020

Appendix

10/2	**PIA Life Cycle Portal** Engineering, Ordering, Installation and Operation Tool
10/3	**Delivery Time** Quick Ship Program, Stock Items delivery
10/4	**Partner**
10/6 10/8	**Industry Services** Industry Services – Portfolio overview Online Support
10/9	**SITRAIN – Digital Industry Academy**
10/10	**Product documentation** Supplied product documentation, QR Code, SIOS
10/11	**Partner at Siemens** Siemens Partner Program
10/12	**Pressure Equipment Directive (2014/68/EU)**
10/15	**Functional safety**
10/16	**Software Licenses**
10/18	**Conditions of sale and delivery**

© Siemens 2020

Engineering, Ordering, Installation and Operation Tool

Overview

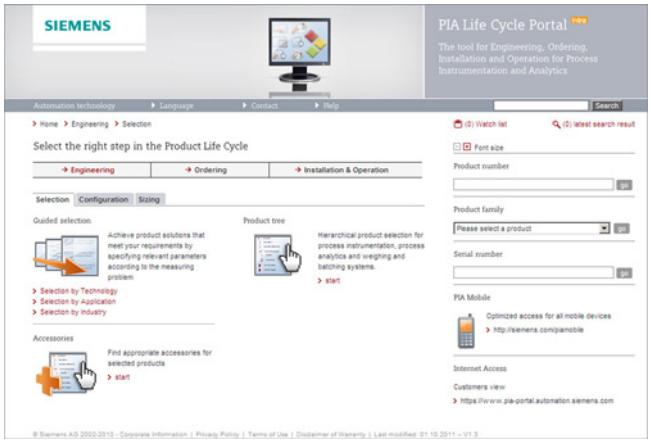

The PIA Life Cycle Portal provides the appropriate functionality in all stages of the Product Life Cycle for products of Process Instrumentation, Process Analytics and Weighing Technology.

The application guides you through Engineering & Selection, supports you at the Order and provides tools and information for Installation and Operation.

- **Phase 1:** Selection & Planning
- **Phase 2:** Ordering
- **Phase 3:** Installation & Operation
- **Additional features:** e. g. PIA Mobile

Phase 1: Selection & Planning

Selection

Achieve product solutions that meet your requirements by specifying relevant parameters according to the measuring point by using the *guided selection* or select the product directly in the *product and accessories tree*.

Configuration

Configure a selected product step by step and use the integrated configuration knowledge to avoid errors.
Product configurations which cannot be ordered are blocked.

Sizing & calculation

Sizing & calculation tools for Gas Analyzers, Weighing and Batching Systems and Flow measurement instruments.

Phase 2: Ordering

Bulk upload

Verify several part numbers in one step by uploading a simple text file.

Watchlist & projects

Collect products in a *watch list* and save it as a *project* for later use.

Interface to the Industry Mall

Order the selected products with the ordering system for Siemens' automation and drive solutions.

Phase 3: Installation & Operation

Spare parts

Find appropriate *spare parts* for selected products or corresponding product families.

After sales support

Go to the *Service and Support Portal* to access manuals, certificates and further information concerning service & support.

Device information and history

Serial number specific product information for installed devices

Additional features

Personalize

Register in order to customize the application to your personal needs.

PIA Mobile

Use the product *selection, configuration and device information and history* with the version optimized for mobile devices.
www.siemens.com/piamobile

Product details

Find all relevant product information at a single glance: commercial and technical data, certificates, images and documents etc.

More information

PIA Life Cycle Portal
Ostliche Rheinbrückenstraße 50
76187 Karlsruhe, Germany
Tel.: +49 (721) 595 2114
E-Mail: support.pia-portal@siemens.com
www.siemens.com/pia-portal

© Siemens 2020

Overview

Delivery times

Standard delivery times for our products are shown in the Selection and Ordering data.

Quick Ship and Stock Items delivery

If you need a product quickly, it is possible to choose between defined Stock Items delivery (▶ identifier) and the Quick Ship Program (⬟ identifier) when ordering. Delivery times are then displayed at the end of the configuration overview

Note

In order to obtain special delivery times, only products with the same identifier may be combined (all Stock Item symbols or all Quick Ship Program symbols).
It is not possible to combine Stock Item/Quick Ship Program options.

All other information without identifiers is available with the current delivery times, which can be found in the "Basic Data" tab of the PIA Life Cycle Portal.

To get region-specific warehouse information: Registration and login in the PIA Life Cycle Portal required

To get the quick ship and warehouse information specific to your region you need to register::

- Select the desired language.
- Use "Sign up" to register.
- After registering, log in via "Login".

Contact

If you have questions about delivery time or the Quick Ship program, please contact your Siemens sales representative.

Example for Stock Items delivery in the PIA Life Cycle Portal

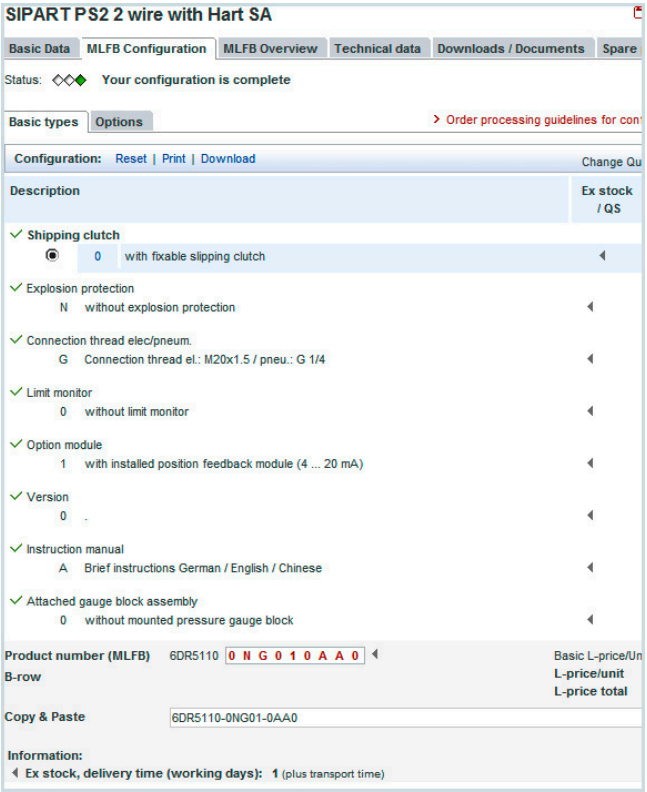

Example for Quick Ship Program delivery in the PIA Life Cycle Portal

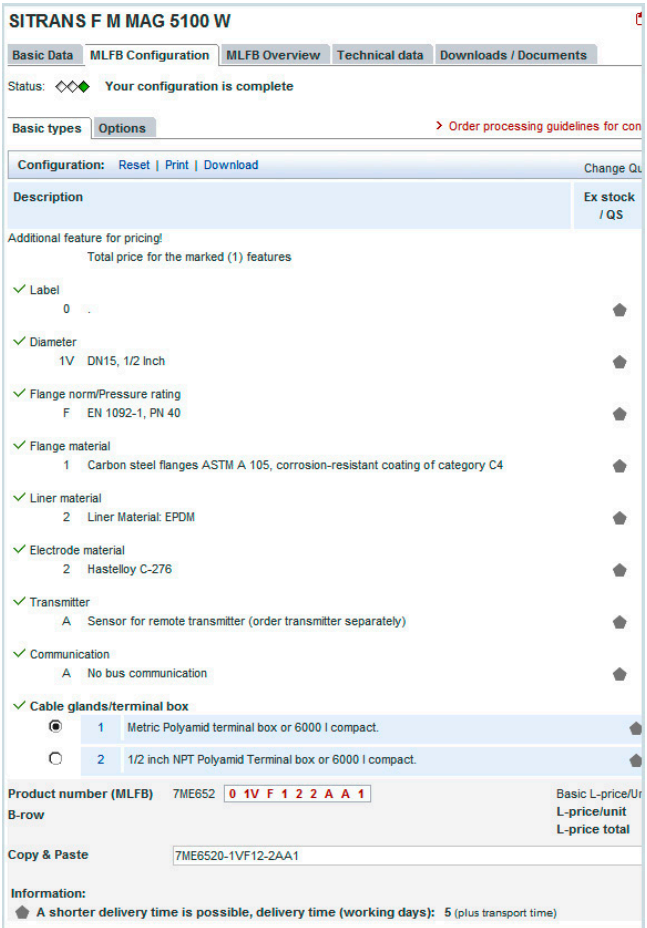

© Siemens 2020

Partner at Siemens

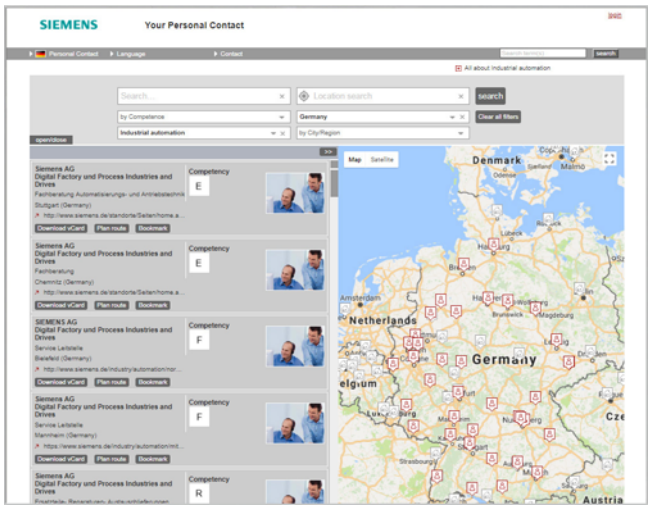

At your service locally, around the globe for consulting, sales, training, service, support, spare parts on the entire portfolio of Digital Industries.

Your partner can be found in our Personal Contacts Database at:
www.siemens.com/automation-contact

You start by selecting

- the required competence,
- products and branches,
- a country and a city

or by a

- location search or free text search.

© Siemens 2020

Overview

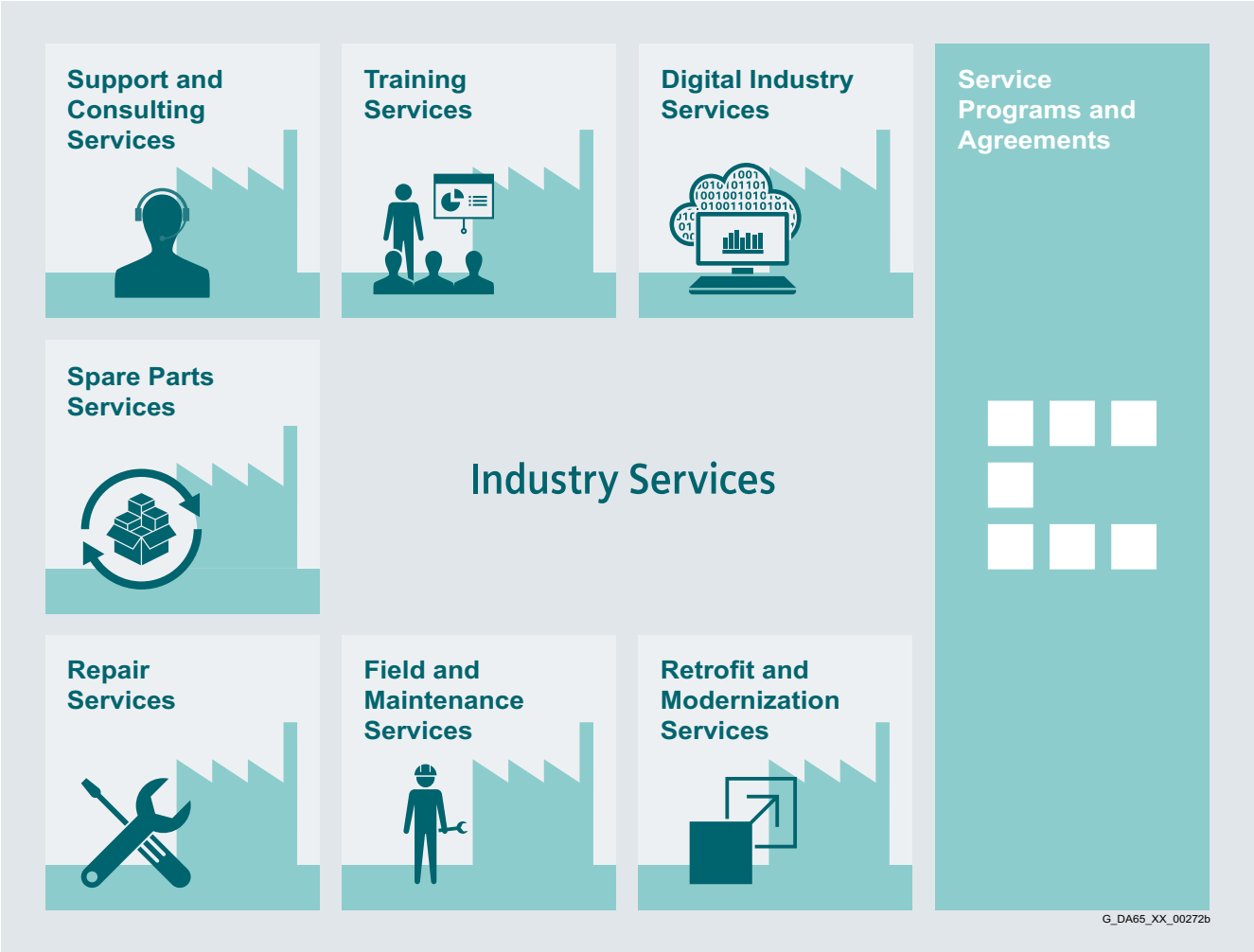

Keep your business running and shaping your digital future – with Industry Services

Optimizing the productivity of your equipment and operations can be a challenge, especially with constantly changing market conditions. Working with our service experts makes it easier. We understand your industry's unique processes and provide the services needed so that you can better achieve your business goals.

You can count on us to maximize your uptime and minimize your downtime, increasing your operations' productivity and reliability. When your operations have to be changed quickly to meet a new demand or business opportunity, our services give you the flexibility to adapt. Of course, we take care that your production is protected against cyber threats. We assist in keeping your operations as energy and resource efficient as possible and reducing your total cost of ownership. As a trendsetter, we ensure that you can capitalize on the opportunities of digitalization and by applying data analytics to enhance decision making: You can be sure that your plant reaches its full potential and retains this over the longer lifespan.

You can rely on our highly dedicated team of engineers, technicians and specialists to deliver the services you need – safely, professionally and in compliance with all regulations. We are there for you, where you need us, when you need us.

www.siemens.com/industryservices

© Siemens 2020

Industry Services – Portfolio overview

Overview

Digital Industry Services

Digital Industry Services make your industrial processes transparent to gain improvements in productivity, asset availability, and energy efficiency.

Production data is generated, filtered and translated with intelligent analytics to enhance decision-making.

This is done whilst taking data security into consideration and with continuous protection against cyber-attack threats.

www.siemens.com/global/en/products/services/industry/digital-industry-services.html

Support and Consulting Services

Industry Online Support site for comprehensive information, application examples, FAQs and support requests.

Technical and Engineering Support for advice and answers for all inquiries about functionality, handling, and fault clearance. The Service Card as prepaid support for value added services such as Priority Call Back or Extended Support offers the clear advantage of quick and easy purchasing.

Information & Consulting Services, e.g. SIMATIC System Audit; clarity about the state and service capability of your automation system or Lifecycle Information Services; transparency on the lifecycle of the products in your plants.

https://support.industry.siemens.com/cs/ww/en/sc/2235

Training Services

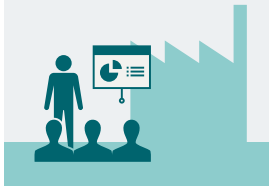

From the basics and advanced to specialist skills, SITRAIN courses provide expertise right from the manufacturer – and encompass the entire spectrum of Siemens products and systems for the industry.

Worldwide, SITRAIN courses are available wherever you need a training course in more than 170 locations in over 60 countries.

https://support.industry.siemens.com/cs/ww/en/sc/2226

Spare Parts Services

Spare Parts Services are available worldwide for smooth and fast supply of spare parts – and thus optimal plant availability. Genuine spare parts are available for up to ten years. Logistic experts take care of procurement, transport, custom clearance, storage and order management. Reliable logistics processes ensure that components reach their destination as needed.

Since not all spare parts can be kept in stock at all times, Siemens offers a preventive measure for spare parts provisioning on the customer's premises with optimized **Spare Parts Packages** for individual products, custom-assembled drive components and entire integrated drive trains – including risk consulting.

Asset Optimization Services help you design a strategy for parts supply where your investment and carrying costs are reduced and the risk of obsolescence is avoided.

https://support.industry.siemens.com/cs/ww/en/sc/2110

© Siemens 2020

Overview (continued)

Repair Services are offered on-site and in regional repair centers for fast restoration of faulty devices' functionality.

Also available are extended repair services, which include additional diagnostic and repair measures, as well as emergency services.

https://support.industry.siemens.com/cs/ww/en/sc/2154

Provide a cost-effective solution for the expansion of entire plants, optimization of systems or upgrading existing products to the latest technology and software, e.g. migration services for automation systems.

Service experts support projects from planning through commissioning and, if desired over the entire extended lifespan, e.g. Retrofit for Integrated Drive Systems for an extended lifetime of your machines and plants.

https://support.industry.siemens.com/cs/ww/en/sc/2286

Siemens specialists are available globally to provide expert field and maintenance services, including commissioning, functional testing, preventive maintenance and fault clearance.
All services can be included in customized service agreements with defined reaction times or fixed maintenance intervals.

https://support.industry.siemens.com/cs/ww/en/sc/2265

A technical Service Program or Agreement enables you to easily bundle a wide range of services into a single annual or multi-year agreement.

You pick the services you need to match your unique requirements or fill gaps in your organization's maintenance capabilities.

Programs and agreements can be customized as KPI-based and/or performance-based contracts.

https://support.industry.siemens.com/cs/ww/en/sc/2275

© Siemens 2020

Overview

Siemens Industry and Online Support with some 1.7 million visitors per month is one of the most popular web services provided by Siemens. It is the central access point for comprehensive technical know-how about products, systems and services for automation and drives applications as well as for process industries.

In connection with the challenges and opportunities related to digitalization you can look forward to continued support with innovative offerings.

© Siemens 2020

Time for learning

Today's demands on our knowledge are every bit as diverse and dynamic as our profession itself. We keep learning more and longer – for our work, for our career and for ourselves. Advancing digitalization entails new topics and is also changing the way we absorb and process knowledge. SITRAIN – Digital Industry Academy offers the right source of knowledge here, which we can use anytime in just the way we need it. The time for learning is now.

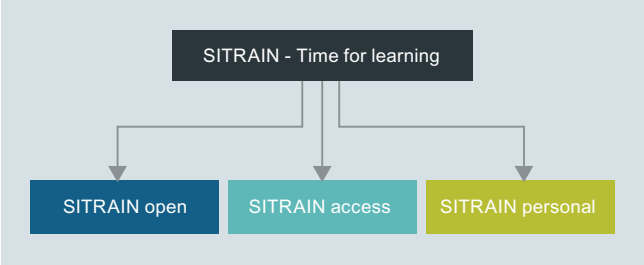

Knowledge for every need

With its three areas – SITRAIN open, SITRAIN access and SITRAIN personal – SITRAIN offers you an all-encompassing range of options for an ongoing expansion of your knowledge and skills, suited for every type of learner. And SITRAIN uses advancing digitalization to continuously expand content and offer new training methods.

Find
your local
offer here

SITRAIN – Digital Industry Academy
Customer Support Germany

Tel.: +49 911 895-7575
Email: sitrain.digital.industry.academy.de@siemens.com

Knowledge you can always find

SITRAIN open bundles useful information, worthwhile data and up-to-date expert knowledge about Siemens products for industry. Search it anytime, find anything – and always the right stuff.

Knowledge that gets you ahead

SITRAIN access is learning in the digital age. It offers you individualized ways to build your knowledge and access to exclusive digital training courses. Take advantage of sustainable learning success with a wide range of learning methods. Improve your skills – whether working in groups with others, or by yourself. Whenever, wherever and however you need to.

Knowledge you can experience

We all want to learn from the best. And SITRAIN personal's training courses let you benefit from our well-practiced trainers' expert knowledge, along with direct access to our training equipment. That's the best way to convey knowledge – whether at your company or in our training classrooms.

SITRAIN – Digital Industry Academy

www.siemens.com/sitrain

- SITRAIN open:
  www.siemens.com/sitrain-open
- SITRAIN access:
  www.siemens.com/sitrain-access
- SITRAIN personal:
  www.siemens.com/sitrain-personal

© Siemens 2020

Supplied product documentation, QR Code, SIOS

Supplied product documentation on DVD and safety instructions

Siemens products for process instrumentation will be delivered with a multi-language **Safety note** and a **Mini DVD "Process Instrumentation and Weighing Systems".**

On the DVD, customers can find many important operating instructions and certificates of our Siemens portfolio for process instrumentation and weighing systems. As well, product or order-specific print material may be part of the delivery.

QR Code – Easy access to product information

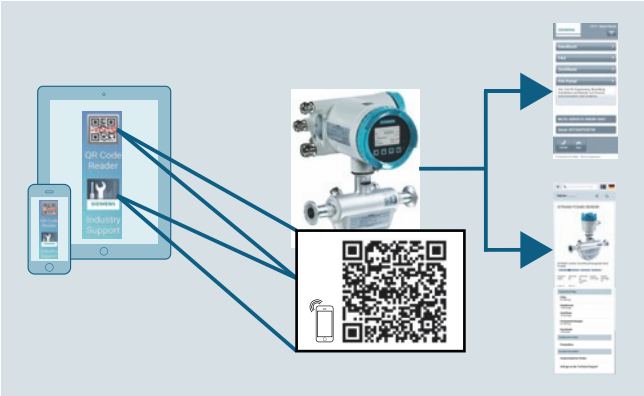

For easy identification, our devices are fitted with a QR code which can be read with the Siemens Industry Support App or any other QR code reader.

This not only enables simple access to article and serial numbers, it also provides you with a direct link to the product documentation, certificates, FAQs and videos.

You can find the Siemens Industry Support App or other QR code reader in your App Store for iOs, Android or Windows mobile.

Siemens Industry Online Support Portal (SIOS)

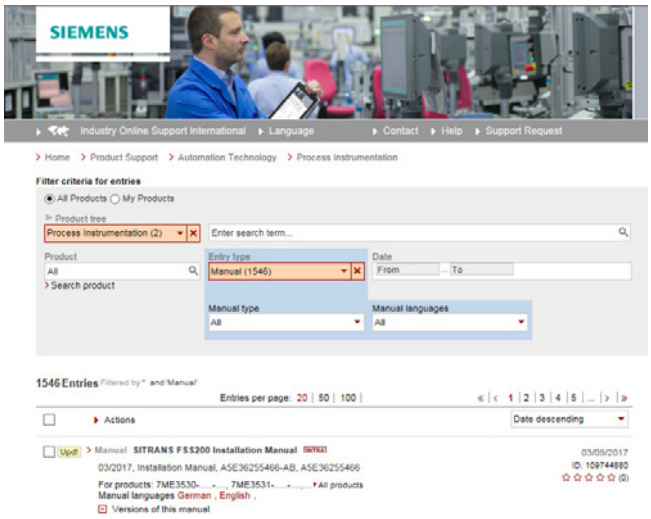

For the complete portfolio, customers can download product documentation for free using the following links to our Siemens Industry Online Support Portal (SIOS):

http://www.siemens.com/processinstrumentation/documentation

By entering the product names as **Search term** and selecting the field **Entry type,** you can find all operating instructions, current catalogs and brochures, certificates, product software (EDDs, calculation tools), product notes and other useful information.

© Siemens 2020

Overview

Siemens Solution and Approved Partner – Partners for your success

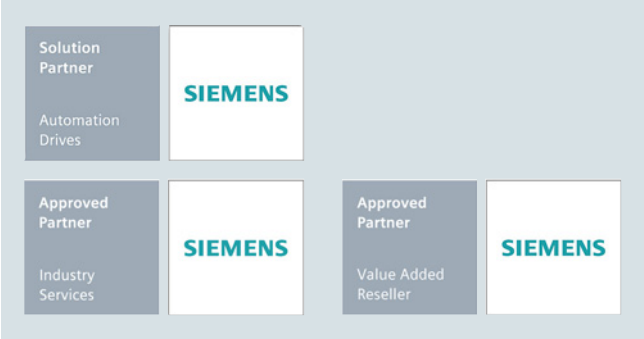

Highest competence in automation and drive technology

Siemens works closely together with selected partner companies around the world in order to ensure that customer requirements for all aspects of automation and drives are fulfilled as best as possible – wherever you are, and whatever the time.

We place great value on our customers acting in accordance with the same ideals which characterize Siemens as a whole: Competence, professionalism and quality. That is why continuous development through qualification and certification measures in line with global standards is a central aspect of our Partner Program. This means that with our partners, you benefit from the same high quality standards all over the world.
The partner emblem is the symbol for tried and tested quality.

The partner network for industry

The Siemens Partner Program offers you expertise and experience close at hand.

Within our global network, we distinguish between Solution Partners and Approved Partners. We currently work with more than 1,500 Solution Partners around the world. Our network of over 150 Approved Partners continues to grow. In more than 80 countries worldwide

Siemens Solution Partner – Automation Drives

At present we are working with more than 1,500 Solution Partners worldwide. They are characterized by extensive application, system and sector knowledge, as well as proven project experience, and are able to implement future-proof tailored solutions of the highest quality, based on our product and system portfolio.

Siemens Approved Partner – Value Added Reseller

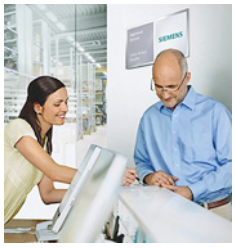

With their detailed technical knowledge, Siemens Approved Partners – Value Added Resellers offer a combination of products and services that range from specialist technologies and customized modifications to the provision of high-quality system and product packages. They also provide qualified technical support and assistance.

Siemens Approved Partner – Industry Services

Siemens Approved Partner – Industry Services put their unique expertise entirely at the service of enhancing your productivity and can be instrumental in ensuring the availability of your plants.

Partner Finder

The ideal partner for your task is just a mouse click away!

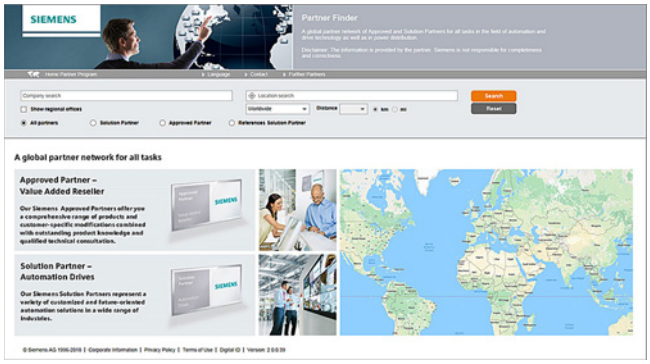

In the Siemens global Solution Partner program, customers are certain to find the optimum partner for their specific requirements – with no great effort. The Partner Finder is basically a comprehensive database that showcases the profiles of all our partners.

Easy selection:
Set filters in the search screen form according to the criteria that are relevant to you. You can also directly enter the name of an existing partner.

Skills at a glance:
Gain a quick insight into the specific competencies of any particular partner with the reference reports.

Direct contact option:
Use our electronic query form:

www.siemens.com/partnerfinder

Additional information of the Siemens Parners for industry is available online at:

www.siemens.com/partnerprogram

© Siemens 2020

General

The pressure equipment directive **2014/68/EU** applies to the alignment of the statutory orders of the European member states for pressure equipment. Such equipment in the sense of the directive includes vessels, pipelines and accessories with a maximum permissible pressure of more than **0.5 bar** above atmospheric.

Classification according to hazard potential

The classification of the devices according to the pressure equipment directive takes place according to the hazard potential (medium/pressure/volume/nominal width) in the categories I to IV or article 4 paragraph 3.
The following criteria are decisive for assessing the hazard potential; they are also listed in diagrams 1 to 4 and 6 to 9:

• Fluid group	Group 1 or 2
• Aggregate state	Liquid, gaseous
• Type of pressurized equipment	
- Vessel	Product of pressure and volume (PS * V [barL])
- Pipeline	Nominal diameter, pressure or product of pressure and nominal diameter (PS * DN)

The fired or otherwise heated pressure equipment is listed separately in diagram 5.

Note:
Liquids according to Article 4 are those liquids whose steam pressure is **not** more than **0.5 bar** above standard atmospheric pressure (1013 mbar) at the maximum permissible temperature.

The **maximum permissible temperature** for the used liquids is the maximum process temperature which can occur, as defined by the user. This must be within the limits defined for the equipment.

Classification of the media (liquid/gas) into fluid groups*

"Fluids" are gases, liquids and vapors in pure phase as well as their mixtures; fluids can include a suspension of solid matter; fluids are classified into the following fluid groups according to article 13 of the pressure equipment directive 2014/68/EU.

Paragraph a

Group 1

Group 1 consisting of substances and mixtures, as defined in points 7 and 8 of article 2 of Regulation (EC) No. 1272/2008, that are classified as hazardous in accordance with the following physical or health hazard classes laid down in parts 2 and 3 of annex I to that Regulation:

i) unstable explosive substances/mixtures or explosive substances/ mixtures of divisions 1.1, 1.2, 1.3, 1.4 and 1.5

ii) flammable gases, categories 1 and 2

iii) oxidizing gases, category 1

iv) liquids, category 1 and 2

v) flammable liquids, category 3 where the maximum permissible temperature is above the flash point

vi) flammable solids, category 1 and 2

vii) self-reactive substances and mixtures, type A to F

viii) pyrophoric liquids, category 1

ix) pyrophoric solids, category 1

x) substances and mixtures which in contact with water emit flammable gases, category 1, 2 and 3

xi) oxidizing liquids, category 1, 2 and 3

xii) oxidizing solids, category 1, 2 and 3

xiii) organic peroxides, types A to F

xiv) acute oral toxicity, category 1 and 2

xv) acute dermal toxicity, category 1 and 2

xvi) acute inhalation toxicity, category 1, 2 and 3

xvii) specific target organ toxicity - single exposure, category 1

Group 1 comprises also substances and mixtures in pressure equipment with a maximum allowable temperature TS which exceeds the flash point of the fluid.

Paragraph b

Group 2

All fluids that are not included in Group 1.

* from: "-DIRECTIVE 2014/68/EU OF THE EUROPEAN PARLIAMENT AND OF THE COUNCIL of 15 May 2014 on the harmonisation of the laws of the Member States relating to the making available on the market of pressure equipment (recast)"

Conformity assessment

Pressure equipment of category I to IV must meet the safety requirements set out in annex II and carry a CE marking.

They must meet a conformity assessment procedure set out in annex III of the Directive.

Pressure equipment to article 4 paragraph 3 shall be designed and manufactured in accordance with the sound engineering practice of a Member State and must not have a CE marking (CE markings from other Directives are not affected).

Siemens has (as long as the device is not subject to article 4 paragraph 3) conducted a conformity assessment for its products, given a CE marking and provided a declaration of conformity.

Monitoring of the design, dimensioning, testing and production takes place according to module H (full quality assurance).

Notes:

- Equipment designed for media with a high danger potential (e.g. gases of fluid group 1) may also be used for media with a lower danger potential (e.g. gases of fluid group 2, or liquids of fluid groups 1 and 2).
- The pressure equipment directive according to Article 1 Paragraph 2 does not apply to equipment such as e.g. mobile offshore plants, ships, aircraft, water supply and waste water networks, nuclear plants, rockets and pipelines outside industrial plants.

© Siemens 2020

Diagrams

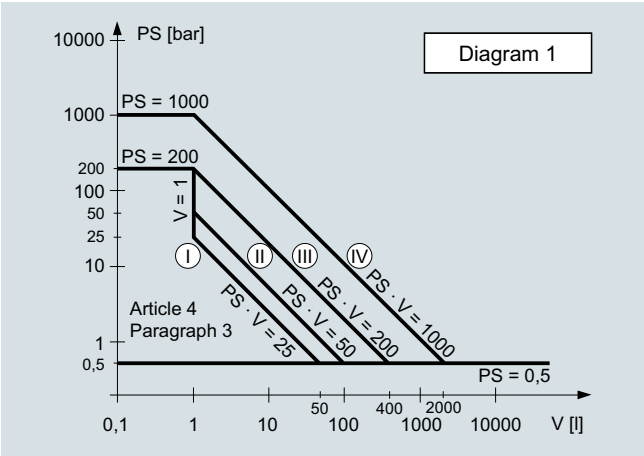

- Gases of fluid group 1
- Vessels in accordance with article 4 paragraph 1 letter a number i first dash
- Exception: unstable gases belonging to Categories I and II must be included in Category III.

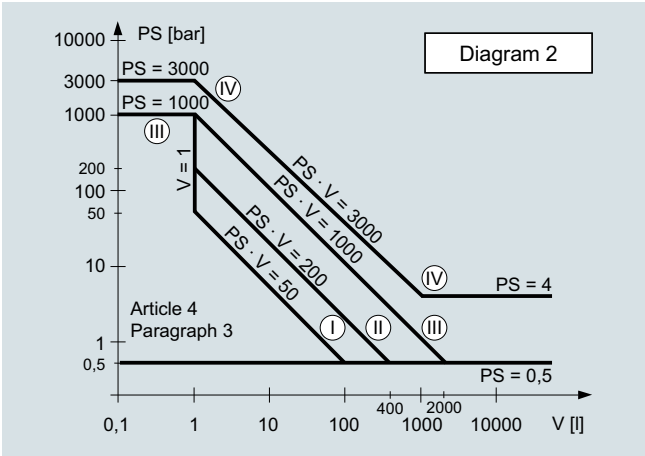

- Gases of fluid group 2
- Vessels in accordance with article 4 paragraph 1 letter a number i second dash
- Exception: fire extinguishers and bottles for breathing apparatus: at least Category III.

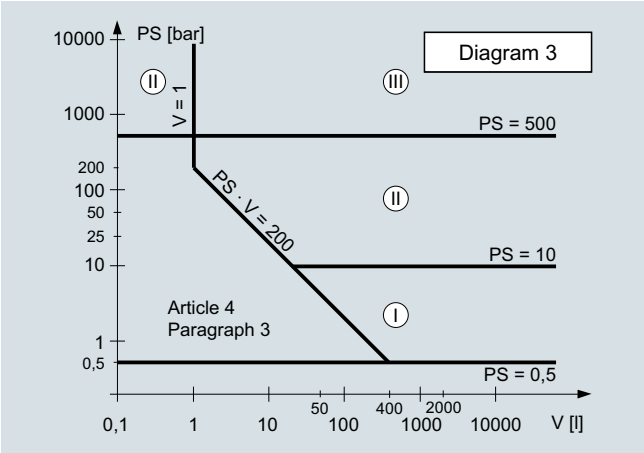

- Liquids of fluid group 1
- Vessels in accordance with article 4 paragraph 1 letter a number ii first dash

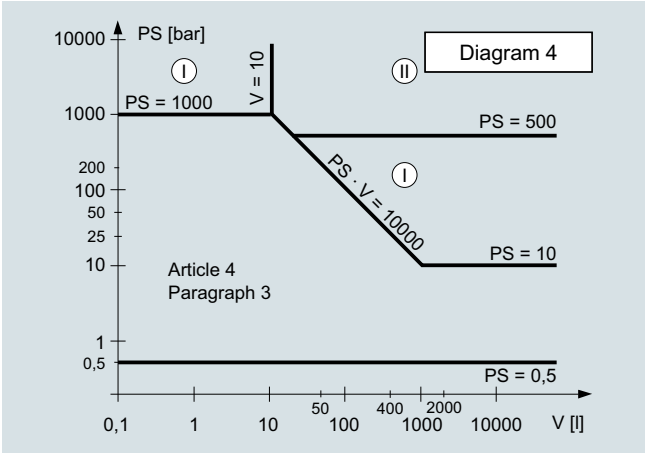

- Liquids of fluid group 2
- Vessels in accordance with article 4 paragraph 1 letter a number ii second dash
- Exception: modules for producing warm water

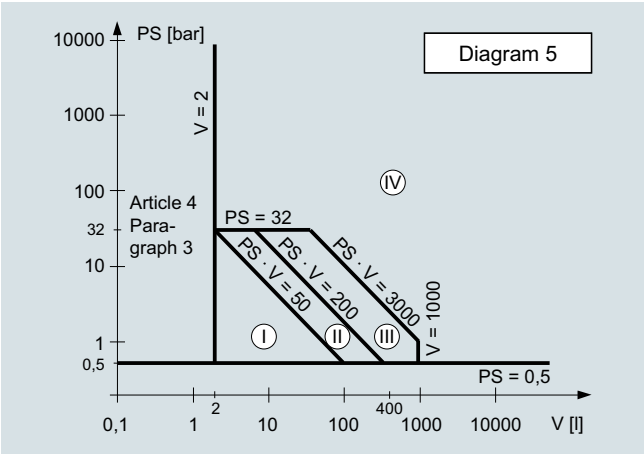

- Fuelled pressure equipment or equipment heated in another manner above 110 °C and liable to overheating.
- Pressure equipment in accordance with article 4 paragraph 1 letter b
- Exception: pressure cooker, test procedure at least according to Category III.

© Siemens 2020

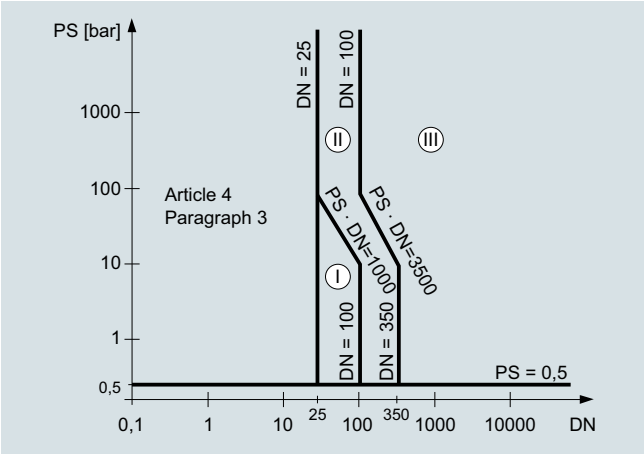

- Gases of fluid group 1
- Piping in accordance with article 4 paragraph 1 letter c number i first dash
- Exception: unstable gases belonging to Categories I and II must be included in Category III.

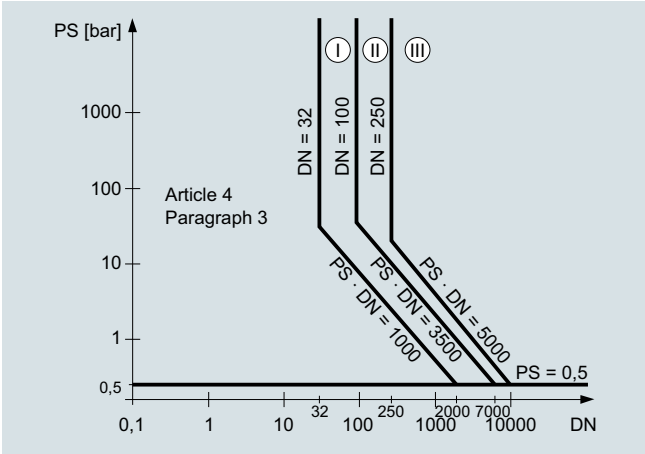

- Gases of fluid group 2
- Piping in accordance with article 4 paragraph 1 letter c number i second dash
- Exception: liquids at temperatures > 350 °C belonging to Category II must be included in Category III.

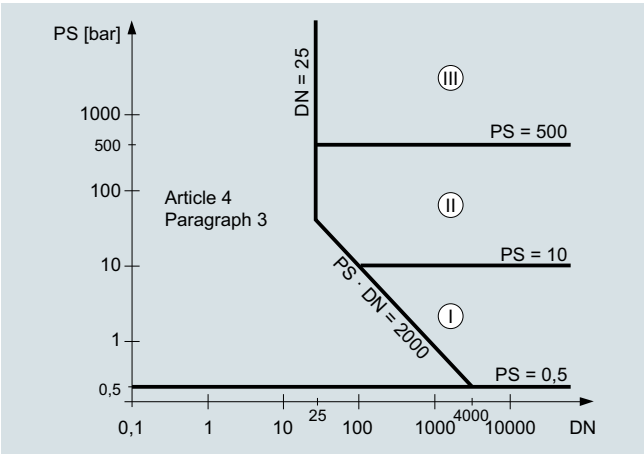

- Liquids of fluid group 1
- Piping in accordance with article 4 paragraph 1 letter c number ii first dash

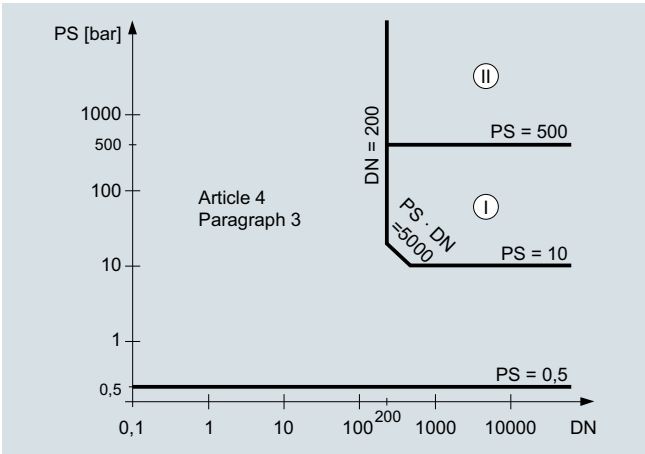

- Liquids of fluid group 2
- Piping in accordance with article 4 paragraph 1 letter c number ii second dash

© Siemens 2020

Overview

Functional safety

Functional safety is a strong tradition at Siemens. Werner von Siemens realized as early as 1880 that safety in automated processes is not only a human obligation, it also makes economic sense. In the process industry, hazards for humans, plants and the environment must be minimized without affecting the production process. With Safety Integrated for Process Automation from Siemens, you benefit from a comprehensive product and service offering for safe, fault-tolerant applications.

What is the Safety Integrity Level (SIL)?

The Safety Integrity Level is a term from the field of functional safety. It helps you assess electrical/electronic/programmable electronic systems in terms of the reliability of their safety functions. The goal is to minimize the risk of malfunction of the system and thereby increase the protection of the employed personnel, the environment and property.

The international standard IEC 61508 describes the type of risk assessment as well as measures for designing appropriate safety functions ranging from sensors, logic processing and extending to actuators. The requirements for the process industry are further specified in IEC 61511-1.

Since the standards IEC 61508 and IEC 61511 for functional safety have been in effect, the demand for process instrumentation equipment conforming to SIL classification has continually increased. For this reason, the product portfolio is constantly expanded to include devices that meet the SIL standard.

You will find the current list of SIL devices from Siemens for process instrumentation available today at:

www.siemens.com/SIL

Additional information

Brochure: "Functional Safety in Process Instrumentation with SIL Rating"

http://w3app.siemens.com/mcms/infocenter/dokumentencenter/sc/pi/InfocenterLanguagePacks/Functional%20safety%20in%20process%20instrumentation%20with%20SIL%20rating/SIL-Broschuere_en.pdf

Website: "Functional Safety"

http://www.industry.siemens.com/topics/global/en/safety-integrated

© Siemens 2020

Overview

Software types

Software requiring a license is categorized into types.
The following software types have been defined:

- Engineering software
- Runtime software

Engineering software

This includes all software products for creating (engineering) user software, e.g. for configuring, programming, parameterizing, testing, commissioning or servicing.

Data generated with engineering software and executable programs can be duplicated for your own use or for use by third-parties free-of-charge.

Runtime software

This includes all software products required for plant/machine operation, e.g. operating system, basic system, system expansions, drivers, etc.

The duplication of the runtime software and executable programs created with the runtime software for your own use or for use by third-parties is subject to a charge.

You can find information about license fees according to use in the ordering data (e.g. in the catalog). Examples of categories of use include per CPU, per installation, per channel, per instance, per axis, per control loop, per variable, etc.

Information about extended rights of use for parameterization/configuration tools supplied as integral components of the scope of supply can be found in the readme file supplied with the relevant product(s).

License types

Siemens Industry Automation & Drive Technologies offers various types of software license:

- Floating license
- Single license
- Rental license
- Rental floating license
- Trial license
- Demo license
- Demo floating license

Floating license

The software may be installed for internal use on any number of devices by the licensee. Only the concurrent user is licensed. The concurrent user is the person using the program. Use begins when the software is started.
A license is required for each concurrent user.

Single license

Unlike the floating license, a single license permits only one installation of the software per license.

The type of use licensed is specified in the ordering data and in the Certificate of License (CoL). Types of use include for example per instance, per axis, per channel, etc.

One single license is required for each type of use defined.

Rental license

A rental license supports the "sporadic use" of engineering software. Once the license key has been installed, the software can be used for a specific period of time (the operating hours do not have to be consecutive).
One license is required for each installation of the software.

Rental floating license

The rental floating license corresponds to the rental license, except that a license is not required for each installation of the software. Rather, one license is required per object (for example, user or device).

Trial license

A trial license supports "short-term use" of the software in a non-productive context, e.g. for testing and evaluation purposes.
It can be transferred to another license.

Demo license

The demo license support the "sporadic use" of engineering software in a non-productive context, for example, use for testing and evaluation purposes. It can be transferred to another license. After the installation of the license key, the software can be operated for a specific period of time, whereby usage can be interrupted as often as required.

One license is required per installation of the software.

Demo floating license

The demo floating license corresponds to the demo license, except that a license is not required for each installation of the software. Rather, one license is required per object (for example, user or device).

Certificate of License (CoL)

The CoL is the licensee's proof that the use of the software has been licensed by Siemens. A CoL is required for every type of use and must be kept in a safe place.

Downgrading

The licensee is permitted to use the software or an earlier version/release of the software, provided that the licensee owns such a version/release and its use is technically feasible.

Delivery versions

Software is constantly being updated.
The following delivery versions

- PowerPack
- Upgrade

can be used to access updates.

Existing bug fixes are supplied with the ServicePack version.

PowerPack

PowerPacks can be used to upgrade to more powerful software. The licensee receives a new license agreement and CoL (Certificate of License) with the PowerPack. This CoL, together with the CoL for the original product, proves that the new software is licensed.
A separate PowerPack must be purchased for each original license of the software to be replaced.

Upgrade

An upgrade permits the use of a new version of the software on the condition that a license for a previous version of the product is already held.
The licensee receives a new license agreement and CoL with the upgrade. This CoL, together with the CoL for the previous product, proves that the new version is licensed.
A separate upgrade must be purchased for each original license of the software to be upgraded.

© Siemens 2020

Overview

ServicePack

ServicePacks are used to debug existing products.
ServicePacks may be duplicated for use as prescribed according to the number of existing original licenses.

License key

Siemens Industry Automation & Drive Technologies supplies software products with and without license keys.

The license key serves as an electronic license stamp and is also the "switch" for activating the software (floating license, rental license, etc.).

The complete installation of software products requiring license keys includes the program to be licensed (the software) and the license key (which represents the license).

Software Update Service (SUS)

As part of the SUS contract, all software updates for the respective product are made available to you free of charge for a period of one year from the invoice date. The contract will automatically be extended for one year if it is not canceled three months before it expires.

The possession of the current version of the respective software is a basic condition for entering into an SUS contract.

You can download explanations concerning license conditions from
https://mall.industry.siemens.com/legal/ww/en/terms_of_trade_en.pdf

© Siemens 2020

1. General Provisions

By using this catalog you can purchase products (hardware, software and services) described therein from Siemens Aktiengesellschaft subject to the following Terms and Conditions of Sale and Delivery (hereinafter referred to as "T&C"). Please note that the scope, the quality and the conditions for supplies and services, including software products, by any Siemens entity having a registered office outside Germany, shall be subject exclusively to the General Terms and Conditions of the respective Siemens entity. The following T&C apply exclusively for orders placed with Siemens Aktiengesellschaft, Germany.

1.1 For customers with a seat or registered office in Germany

For customers with a seat or registered office in Germany, the following terms and conditions apply subordinate to T&C:

- for products, which include specific terms and conditions in the description text, these specific terms and conditions shall apply and subordinate thereto,
- for installation work the "General Conditions for Erection Works – Germany"[1)] ("Allgemeine Montagebedingungen – Deutschland" (currently only available in German)) and/or
- for stand-alone software products and software products forming a part of a product or project, the "General License Conditions for Software Products for Automation and Drives for Customers with a Seat or registered Office in Germany"[1)] and/or
- for consulting services the "General Terms and Conditions for Consulting Services of the Division DF – Germany"[1)] and/or
- for other supplies and/or services the "General Conditions for the Supply of Products and Services of the Electrical and Electronics Industry"[1)].
  In case such supplies and/or services should contain Open Source Software, the conditions of which shall prevail over the "General Conditions for the Supply of Products and Services of the Electrical and Electronics Industry"[1)], a notice will be contained in the scope of delivery in which the applicable conditions for Open Source Software are specified. This shall apply mutatis mutandis for notices referring to other third party software components.

1.2 For customers with a seat or registered office outside Germany

For customers with a seat or registered office outside Germany, the following terms and conditions apply subordinate to T&C:

- for products, which include specific terms and conditions in the description text, these specific terms and conditions shall apply and subordinate thereto,
- for services the "International Terms & Conditions for Services"[1)] supplemented by "Software Licensing Conditions"[1)] and/or
- for consulting services the "General Terms and Conditions for Consulting Services of the Division DF – Germany"[1)] and/or
- for other supplies of hard- and software the "International Terms & Conditions for Products"[1)] supplemented by "Software Licensing Conditions"[1)]

1.3 For customers with master or framework agreement

To the extent our supplies and/or services offered are covered by an existing master or framework agreement, the terms and conditions of that agreement shall apply instead of T&C.

2. Prices

The prices are in € (Euro) ex point of delivery, exclusive of packaging.

The sales tax (value added tax) is not included in the prices. It shall be charged separately at the respective rate according to the applicable statutory legal regulations.

Prices are subject to change without prior notice. We will charge the prices valid at the time of delivery.

To compensate for variations in the price of raw materials (e.g. silver, copper, aluminum, lead, gold, dysprosium and neodym), surcharges are calculated on a daily basis using the so-called metal factor for products containing these raw materials. A surcharge for the respective raw material is calculated as a supplement to the price of a product if the basic official price of the raw material in question is exceeded.

The metal factor of a product indicates the basic official price (for those raw materials concerned) as of which the surcharges on the price of the product are applied, and with what method of calculation.

An exact explanation of the metal factor can be downloaded at:

https://mall.industry.siemens.com/legal/ww/en/terms_of_trade_en.pdf

To calculate the surcharge (except in the cases of dysprosium and neodym), the official price from the day prior to that on which the order was received or the release order was effected is used.

To calculate the surcharge applicable to dysprosium and neodym ("rare earths"), the corresponding three-month basic average price in the quarter prior to that in which the order was received or the release order was effected is used with a one-month buffer (details on the calculation can be found in the explanation of the metal factor).

3. Additional Terms and Conditions

The dimensions are in mm. In Germany, according to the German law on units in measuring technology, data in inches apply only to devices for export.

Illustrations are not binding.

Insofar as there are no remarks on the individual pages of this catalog – especially with regard to data, dimensions and weights given – these are subject to change without prior notice.

[1)] The text of the Terms and Conditions of Siemens AG can be downloaded at https://mall.industry.siemens.com/legal/ww/en/terms_of_trade_en.pdf

© Siemens 2020

4. Export Regulations

We shall not be obligated to fulfill any agreement if such fulfillment is prevented by any impediments arising out of national or international foreign trade or customs requirements or any embargoes and/or other sanctions.

Export may be subject to license. We shall indicate in the delivery details whether licenses are required under German, European and US export lists.

Our products are controlled by the U.S. Government (when labeled with "ECCN" unequal "N") and authorized for export only to the country of ultimate destination for use by the ultimate consignee or end-user(s) herein identified. They may not be resold, transferred, or otherwise disposed of, to any other country or to any person other than the authorized ultimate consignee or end-user(s), either in their original form or after being incorporated into other items, without first obtaining approval from the U.S. Government or as otherwise authorized by U.S. law and regulations.

The export indications can be viewed in advance in the description of the respective goods on the Industry Mall, our online catalog system. Only the export labels "AL" and "ECCN" indicated on order confirmations, delivery notes and invoices are authoritative.

Products labeled with "AL" unequal "N" are subject to European / national export authorization. Products without label, with label "AL:N" / "ECCN:N", or label "AL:9X9999" / "ECCN: 9X9999" may require authorization from responsible authorities depending on the final end-use, or the destination.

If you transfer goods (hardware and/or software and/or technology as well as corresponding documentation, regardless of the mode of provision) delivered by us or works and services (including all kinds of technical support) performed by us to a third party worldwide, you must comply with all applicable national and international (re-)export control regulations.

If required for the purpose of conducting export control checks, you (upon request by us) shall promptly provide us with all information pertaining to the particular end customer, final disposition and intended use of goods delivered by us respectively works and services provided by us, as well as to any export control restrictions existing in this relation.

The products listed in this catalog may be subject to European/German and/or US export regulations. Any export requiring approval is therefore subject to authorization by the relevant authorities.

Errors excepted and subject to change without prior notice.

© Siemens 2020

Notes

© Siemens 2020

Easy product selection and ordering: Industry Mall

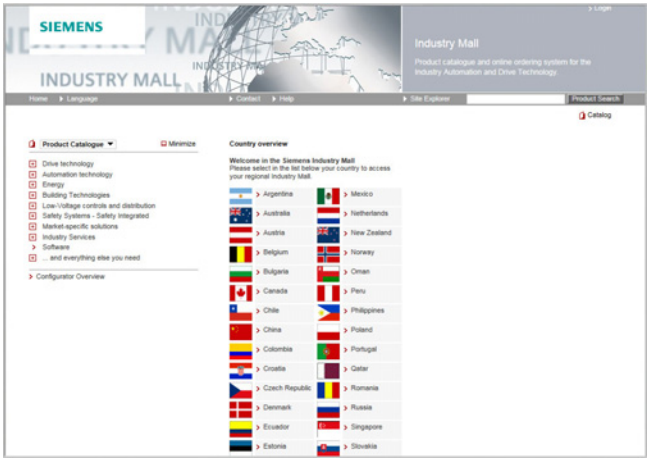

Industry Mall

The Industry Mall is a Siemens AG Internet ordering platform. It provides you with online access to a comprehensive product spectrum that is presented in an informative, well-organized way.

Powerful search functions help you select the required products, while configurators enable you to configure complex product and system components quickly and easily. CAx data are also available for you to use.

Data transfer allows the entire procedure, from selection through ordering to tracking and tracing, to be carried out online. Availability checks, individual customer discounting, and quotation preparation are also possible.

www.siemens.com/industrymall

Downloading catalogs

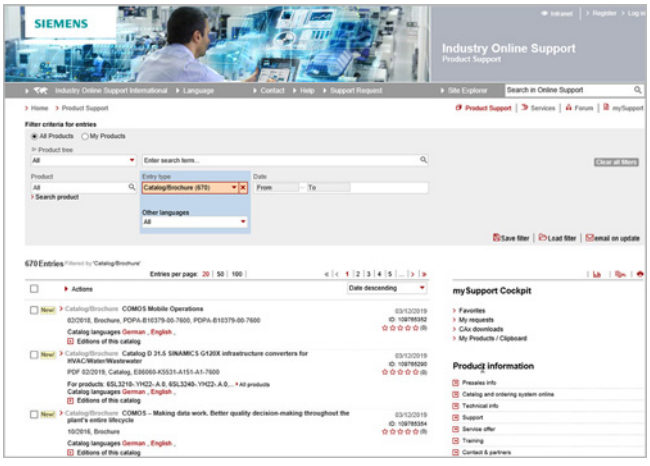

Siemens Industry Online Support

You can download catalogs and brochures in PDF format from Siemens Industry Online Support without having to register.

The filter box makes it possible to perform targeted searches.

www.siemens.com/industry-catalogs

Ordering printed catalogs

Please contact your local Siemens branch if you are interested in ordering printed catalogs.
Addresses can be found at
www.siemens.com/automation-contact

© Siemens 2020

Get more information

All the latest information on products for process Instrumentation can be found on the internet at **www.siemens.com/processinstrumentation**

Published by
Siemens AG

Siemens AG
Digital Industries
Process Automation
Östliche Rheinbrückenstr. 50
76187 Karlsruhe, Germany

For the U.S. published by
Siemens Industry Inc.

100 Technology Drive
Alpharetta, GA 30005
United States

Article No. PDF (E86060-K6201-A101-C4-7600)
KG 1020 PDF 1848 En
Produced in Germany
© Siemens 2020

Subject to changes and errors. The information given in this document only contains general descriptions and/or performance features which may not always specifically reflect those described, or which may undergo modification in the course of further development of the products. The requested performance features are binding only when they are expressly agreed upon in the concluded contract.

All product designations may be trademarks or other rights of Siemens AG, its affiliated companies or other companies whose use by third parties for their own purposes could violate the rights of the respective owner.

Security information

Siemens provides products and solutions with industrial security functions that support the secure operation of plants, systems, machines and networks.

In order to protect plants, systems, machines and networks against cyber threats, it is necessary to implement – and continuously maintain – a holistic, state-of-the-art industrial security concept. Siemens' products and solutions constitute one element of such a concept.

Customers are responsible for preventing unauthorized access to their plants, systems, machines and networks. Such systems, machines and components should only be connected to an enterprise network or the internet if and to the extent such a connection is necessary and only when appropriate security measures (e.g. firewalls and/or network segmentation) are in place.

For additional information on industrial security measures that may be implemented, please visit **https://www.siemens.com/industrialsecurity**

Siemens' products and solutions undergo continuous development to make them more secure. Siemens strongly recommends that product updates are applied as soon as they are available and that the latest product versions are used. Use of product versions that are no longer supported, and failure to apply the latest updates may increase customer's exposure to cyber threats.

To stay informed about product updates, subscribe to the Siemens Industrial Security RSS Feed under **https://www.siemens.com/industrialsecurity**