SIEMENS

SIMATIC

SIMATIC Energy Suite V16.0

Function Manual

Preface

Basics of the SIMATIC Energy Suite 1

Supply energy data 2

Process energy data 3

Buffering and archiving energy data 4

Generate energy program 5

Visualizing and evaluating energy data 6

Optimizing energy consumptions 7

Energy Suite blocks - Acquisition A

Energy Suite blocks - Load management B

Service & Support C

11/2019

A5E36824823-AE

Legal information

Warning notice system

This manual contains notices you have to observe in order to ensure your personal safety, as well as to prevent damage to property. The notices referring to your personal safety are highlighted in the manual by a safety alert symbol, notices referring only to property damage have no safety alert symbol. These notices shown below are graded according to the degree of danger.

⚠ DANGER

indicates that death or severe personal injury **will** result if proper precautions are not taken.

⚠ WARNING

indicates that death or severe personal injury **may** result if proper precautions are not taken.

⚠ CAUTION

indicates that minor personal injury can result if proper precautions are not taken.

NOTICE

indicates that property damage can result if proper precautions are not taken.

If more than one degree of danger is present, the warning notice representing the highest degree of danger will be used. A notice warning of injury to persons with a safety alert symbol may also include a warning relating to property damage.

Qualified Personnel

The product/system described in this documentation may be operated only by **personnel qualified** for the specific task in accordance with the relevant documentation, in particular its warning notices and safety instructions. Qualified personnel are those who, based on their training and experience, are capable of identifying risks and avoiding potential hazards when working with these products/systems.

Proper use of Siemens products

Note the following:

⚠ WARNING

Siemens products may only be used for the applications described in the catalog and in the relevant technical documentation. If products and components from other manufacturers are used, these must be recommended or approved by Siemens. Proper transport, storage, installation, assembly, commissioning, operation and maintenance are required to ensure that the products operate safely and without any problems. The permissible ambient conditions must be complied with. The information in the relevant documentation must be observed.

Trademarks

All names identified by ® are registered trademarks of Siemens AG. The remaining trademarks in this publication may be trademarks whose use by third parties for their own purposes could violate the rights of the owner.

Disclaimer of Liability

We have reviewed the contents of this publication to ensure consistency with the hardware and software described. Since variance cannot be precluded entirely, we cannot guarantee full consistency. However, the information in this publication is reviewed regularly and any necessary corrections are included in subsequent editions.

Siemens AG
Division Digital Factory
Postfach 48 48
90026 NÜRNBERG
GERMANY

A5E36824823-AE
℗ 11/2019 Subject to change

Copyright © Siemens AG 2019.
All rights reserved

Preface

Purpose of the documentation

This documentation supports you in the configuration and commissioning of the energy management functions of SIMATIC Energy Suite in STEP 7 (TIA Portal).

Basic knowledge required

The following knowledge is required in order to understand the documentation:

- Proficiency with STEP 7 (TIA Portal) and WinCC (TIA Portal)
- Proficiency with handling measurement hardware for provision of energy data

Validity of the documentation

This documentation is valid for SIMATIC Energy Suite V15.1.

Conventions

Read also the following highlighted information:

Note

The notes contain important information on the product described in the documentation, on the handling of the product or on the part of the documentation to which particular attention should be paid.

Additional assistance

- Information about the technical support available can be found in the appendix to this documentation.
- The range of technical documentation for the individual SIMATIC products and automation systems is available on the Internet (http://www.siemens.com/simatic-tech-doku-portal).
- The online catalog and the ordering system are available on the Internet (https://mall.industry.siemens.com).

Security information

Siemens provides products and solutions with industrial security functions that support the secure operation of plants, systems, machines and networks.

In order to protect plants, systems, machines and networks against cyber threats, it is necessary to implement – and continuously maintain – a holistic, state-of-the-art industrial security concept. Siemens' products and solutions only form one element of such a concept.

Customer is responsible to prevent unauthorized access to its plants, systems, machines and networks. Systems, machines and components should only be connected to the enterprise network or the internet if and to the extent necessary and with appropriate security measures (e.g. use of firewalls and network segmentation) in place.

Additionally, Siemens' guidance on appropriate security measures should be taken into account. For more information about industrial security, please visit (http://www.siemens.com/industrialsecurity).

Siemens' products and solutions undergo continuous development to make them more secure. Siemens strongly recommends to apply product updates as soon as available and to always use the latest product versions. Use of product versions that are no longer supported, and failure to apply latest updates may increase customer's exposure to cyber threats.

To stay informed about product updates, subscribe to the Siemens Industrial Security RSS Feed under (http://www.siemens.com/industrialsecurity).

Data protection

Siemens observes the principles of data protection, in particular the principle of data minimization (privacy by design). This means for this SIMATIC product, the product does not process / save any personal information.

Table of contents

Preface 3

1 Basics of the SIMATIC Energy Suite 13

1.1 Energy Management with SIMATIC Energy Suite 13

1.2 SIMATIC Energy Suite operations and components 14

1.3 Procedural overview 18

1.4 Performance features and conventions 21

2 Supply energy data 23

2.1 Important information on energy data 24

2.2 Energy data from measurement hardware 26

2.3 Energy data from the process image or bit memory area of the S7-CPU 29

2.4 Energy data from data blocks 31

3 Process energy data 33

3.1 Acquisition objects and energy acquisition program 33

3.2 Creating an acquisition object table 36

3.3 Adding acquisition objects for acquisition object tables 37

3.4 Setting the properties of the acquisition objects 40

3.4.1 Configuring an acquisition object 40

3.4.2 Basic settings 41

3.4.3 Project information 42

3.4.4 Identification & Maintenance 42

3.4.5 Change the enable for acquisition objects for the energy program 43

3.4.6 Energy data source 44

3.4.6.1 Assign energy data source 44

3.4.6.2 Energy data source 46

3.4.6.3 Energy data type 48

3.4.7 Periodic energy values 51

3.4.7.1 Setting energy values for periodic archiving 51

3.4.7.2 Periodic energy data 52

3.4.8 Processing 54

3.4.8.1 General processing settings 54

4 Buffering and archiving energy data ... 57

4.1 Defining archiving periods ... 57

4.2 Archiving periods ... 59

4.3 Setting the archiving on a S7-CPU (SIMATIC Memory Card) ... 61

4.4 Archiving and buffering (S7-CPU) ... 62

4.5 Example for archiving (S7 CPU) ... 63

4.6 Setting the archiving on a PC station with WinCC Professional (Data Log) ... 64

4.7 Archiving and buffering (WinCC Professional) ... 66

4.8 Examples of archiving and buffering (WinCC Professional) ... 69

5 Generate energy program ... 71

5.1 Making general settings for the energy program ... 71

5.2 General settings ... 72

5.3 Runtime licenses for Energy Suite ... 73

5.4 Generate energy program ... 75

5.5 Structure of the energy program ... 78
5.5.1 Structure of the energy program ... 78
5.5.2 EnS - block types ... 79
5.5.3 EnS - program blocks ... 81
5.5.4 EnS - acquisition objects ... 84
5.5.5 Energy Suite - data types ... 85
5.5.6 Driver blocks for measurement hardware ... 86
5.5.6.1 Structure of the energy program for measurement hardware ... 86
5.5.6.2 Energy data processing based on the "IPO" principle ... 87
5.5.6.3 Area: Input ... 88
5.5.6.4 Area: Processing ... 88
5.5.6.5 Area: Output ... 91

5.6 Compiling and downloading the PLC program ... 93

5.7 Testing the energy program ... 94

5.8 Editing the PLC program without installation of Energy Suite ... 95

5.9 PLC program without measurement hardware library with driver blocks ... 97

6 Visualizing and evaluating energy data ... 99

6.1 Procedural overview of archiving and visualization with WinCC Professional ... 99

6.2 Energy values on PC station with WinCC Professional ... 101

6.3 Displaying energy values for archiving in WinCC Professional ... 102

6.4 Overview of energy data ... 103

6.5 Create archiving structure for energy values ... 104

6.6 Data log and segmentation for Energy Suite ... 107

6.7 Archiving energy data ... 108

6.8 Create screens for Energy Suite with SiVArc 109
6.8.1 Create SiVArc screen rules and copy rules for Energy Suite 109
6.8.2 Create screens for Energy Suite 111

6.9 Visualize energy data with WinCC Online Trend View 113

6.10 Evaluate energy data with Energy Suite Export Tool 114

7 Optimizing energy consumptions 121

7.1 Load management with Energy Suite 121

7.2 Procedural overview for load management 123

7.3 Performance features and conventions 125

7.4 Optimize energy consumptions 127
7.4.1 Energy program for load management 127
7.4.2 Activating forecast feature of an acquisition object 129
7.4.3 Creating a load management system 131
7.4.4 Setting the properties of a load management system 132
7.4.4.1 Configuring a load management system 132
7.4.4.2 General settings 133
7.4.5 Adding an actor 135
7.4.6 Setting the properties of the actor 136
7.4.6.1 Configuring an actor 136
7.4.6.2 General settings 137

7.5 Generate energy program for load management 139
7.5.1 Generate energy program 139
7.5.2 Structure of energy program 142
7.5.2.1 Structure of energy program 142
7.5.2.2 EnS - block types 142
7.5.2.3 EnS - acquisition objects 144
7.5.2.4 EnS - program blocks 145
7.5.2.5 LMGT - systems 146
7.5.2.6 Energy Suite data types 147
7.5.3 Configuring load management parameters with library elements 148

A Energy Suite blocks - Acquisition 151

A.1 Overview of Energy Suite blocks for acquisition 151

A.2 Function blocks (FBs) 156
A.2.1 EnS_ArchiveDataLog: Write energy values to data logs 156
A.2.1.1 Description of EnS_ArchiveDataLog 156
A.2.1.2 Parameters of EnS_ArchiveDataLog 158
A.2.1.3 Parameter status 160
A.2.1.4 Alarms of EnS_ArchiveDataLog 163
A.2.2 EnS_ArchiveHMI: Write energy values to data logs 166
A.2.2.1 Description of EnS_ArchiveHMI 166
A.2.2.2 WinCC Professional component 168
A.2.2.3 Parameters of EnS_ArchiveHMI 169
A.2.2.4 Parameter status 170
A.2.2.5 Alarms of EnS_ArchiveHMI 172

A.2.3 EnS_BufferRead: Reading energy values from data blocks ... 174
A.2.3.1 Description of EnS_BufferRead ... 174
A.2.3.2 Parameters of EnS_BufferRead ... 175
A.2.3.3 Parameter status ... 175
A.2.4 EnS_BufferWrite: Write energy values to data blocks ... 176
A.2.4.1 Description of EnS_BufferWrite ... 176
A.2.4.2 Parameters of EnS_BufferWrite ... 177
A.2.4.3 Parameter status ... 178
A.2.5 EnS_CalcEnergyData: Calculating energy values ... 179
A.2.5.1 Description of EnS_CalcEnergyData ... 179
A.2.5.2 Parameters of EnS_CalcEnergyData ... 183
A.2.5.3 Parameter status ... 183
A.2.6 EnS_DrvAnalogValue: Acquire power values of the REAL type ... 185
A.2.6.1 Description of EnS_DrvAnalogValue ... 185
A.2.6.2 Parameters of EnS_DrvAnalogValue ... 185
A.2.6.3 Parameter status ... 186
A.2.6.4 Alarms of EnS_DrvAnalogValue ... 186
A.2.7 EnS_DrvCounterLInt: Acquire energy counter values of the LINT type ... 187
A.2.7.1 Description of EnS_DrvCounterLInt ... 187
A.2.7.2 Parameters of EnS_DrvCounterLInt ... 187
A.2.7.3 Parameter status ... 188
A.2.7.4 Alarms of EnS_DrvCounterLInt ... 188
A.2.8 EnS_DrvCounterLReal: Acquire energy counter values of the LREAL type ... 189
A.2.8.1 Description of EnS_DrvCounterLReal ... 189
A.2.8.2 Parameters of EnS_DrvCounterLReal ... 189
A.2.8.3 Parameter status ... 190
A.2.8.4 Alarms of EnS_DrvCounterLReal ... 190
A.2.9 EnS_DrvPulse: Acquiring pulse signals ... 191
A.2.9.1 Description of EnS_DrvPulse ... 191
A.2.9.2 Parameters of EnS_DrvPulse ... 191
A.2.9.3 Parameter status ... 192
A.2.9.4 Alarms of EnS_DrvPulse ... 192
A.2.10 EnS_EnergyDataAdv: Providing advanced energy values ... 193
A.2.10.1 Description of EnS_EnergyDataAdv ... 193
A.2.10.2 Parameters of EnS_EnergyDataAdv ... 193
A.2.10.3 Parameter status ... 193
A.2.11 EnS_EnergyDataAdvMinMax: Providing advanced minimum and maximum values ... 194
A.2.11.1 Description of EnS_EnergyDataAdvMinMax ... 194
A.2.11.2 Parameters of EnS_EnergyDataAdvMinMax ... 194
A.2.11.3 Parameter status ... 194
A.2.12 EnS_EnergyDataBasic: Providing metadata and energy values ... 195
A.2.12.1 Description of EnS_EnergyDataBasic ... 195
A.2.12.2 Parameters of EnS_EnergyDataBasic ... 195
A.2.12.3 Parameter status ... 196
A.2.12.4 Alarms of EnS_EnergyDataBasic ... 197
A.2.13 EnS_Organization: Providing organizational data ... 199
A.2.13.1 Description of EnS_Organization ... 199
A.2.13.2 Parameters of EnS_Organization ... 199
A.2.14 EnS_TimeSync: Synchronize timers ... 200
A.2.14.1 Description of EnS_TimeSync ... 200
A.2.14.2 Parameters of EnS_TimeSync ... 202
A.2.14.3 Parameter status ... 203

A.3 Data blocks (DBs) 206
A.3.1 EnS_BufferDB 206
A.3.1.1 Description of EnS_BufferDB 206
A.3.1.2 Structure of EnS_BufferDB 206
A.3.2 EnS_BufferWorkDB 207
A.3.2.1 Description of EnS_BufferWorkDB 207
A.3.2.2 Structure of EnS_BufferWorkDB 207

A.4 User-defined data types (UDTs) 208
A.4.1 EnS_typeAnalogValue 208
A.4.1.1 Description of EnS_typeAnalogValue 208
A.4.1.2 Structure of EnS_typeAnalogValue 208
A.4.2 EnS_typeBufferReadCtrl 208
A.4.2.1 Description of EnS_typeBufferReadCtrl 208
A.4.2.2 Structure of EnS_typeBufferReadCtrl 208
A.4.3 EnS_typeBufferReadStat 209
A.4.3.1 Description of EnS_typeBufferReadStat 209
A.4.3.2 Structure of EnS_typeBufferReadStat 209
A.4.4 EnS_typeBufferWork 210
A.4.4.1 Description of EnS_typeBufferWork 210
A.4.4.2 Structure of EnS_typeBufferWork 210
A.4.5 EnS_typeBufferWriteCtrl 211
A.4.5.1 Description of EnS_typeBufferWriteCtrl 211
A.4.5.2 Structure of EnS_typeBufferWriteCtrl 211
A.4.6 EnS_typeBufferWriteStat 211
A.4.6.1 Description of EnS_typeBufferWriteStat 211
A.4.6.2 Structure of EnS_typeBufferWriteStat 211
A.4.7 EnS_typeEnergyAdv 212
A.4.7.1 Description of EnS_typeEnergyAdv 212
A.4.7.2 Structure of EnS_typeEnergyAdv 212
A.4.8 EnS_typeEnergyBasic 214
A.4.8.1 Description of EnS_typeEnergyBasic 214
A.4.8.2 Structure of EnS_typeEnergyBasic 214
A.4.9 EnS_typeEnergyCounter 215
A.4.9.1 Description of EnS_typeEnergyCounter 215
A.4.9.2 Structure of EnS_typeEnergyCounter 215
A.4.10 EnS_typeEnergyMeta 216
A.4.10.1 Description of EnS_typeEnergyMeta 216
A.4.10.2 Structure of EnS_typeEnergyMeta 216
A.4.11 EnS_typeHMIWriteCtrl 219
A.4.11.1 Description of EnS_typeHMIWriteCtrl 219
A.4.11.2 Structure of EnS_typeHMIWriteCtrl 219
A.4.12 EnS_typeHMIWriteStat 220
A.4.12.1 Description of EnS_typeHMIWriteStat 220
A.4.12.2 Structure of EnS_typeHMIWriteStat 220
A.4.13 EnS_typeOrgData 221
A.4.13.1 Description of EnS_typeOrgData 221
A.4.13.2 Structure of EnS_typeOrgData 221
A.4.14 EnS_typeSync 221
A.4.14.1 Description of EnS_typeSync 221
A.4.14.2 Structure of EnS_typeSync 221

A.4.15 EnS_typeValue ... 222
A.4.15.1 Description of EnS_typeValue ... 222
A.4.15.2 Structure of EnS_typeValue ... 222

A.5 Definition of enumerations ... 223
A.5.1 Enumeration for the connection type of the measuring device ... 223
A.5.2 Enumeration for units ... 224

B Energy Suite blocks - Load management ... 225

B.1 Overview of Energy Suite blocks for load management ... 225

B.2 Function blocks ... 228
B.2.1 EnS_LmgtForecast_x ... 228
B.2.1.1 Description of EnS_LmgtForecast_x ... 228
B.2.1.2 Parameters of EnS_LmgtForecast_x ... 229
B.2.1.3 Parameter status ... 229
B.2.2 EnS_LmgtControl_Peak ... 230
B.2.2.1 Description of Block EnS_LmgtControl_Peak ... 230
B.2.2.2 Parameters of EnS_LmgtControl_Peak ... 235
B.2.2.3 Parameter status ... 235
B.2.3 EnS_LmgtActor_x ... 237
B.2.3.1 Description of EnS_LmgtActor_x ... 237
B.2.3.2 Parameters of EnS_LmgtActor_x ... 244
B.2.3.3 Parameter status ... 245
B.2.3.4 Job Concept - De-/ Escalation sequence ... 246
B.2.4 EnS_LmgtBackupRestore ... 252
B.2.4.1 Description of EnS_LmgtBackupRestore ... 252
B.2.4.2 Parameters of EnS_LmgtBackupRestore ... 257
B.2.4.3 Parameter status ... 257

B.3 Data blocks ... 258
B.3.1 EnS_LmgtGeneralData ... 258
B.3.1.1 Description of EnS_LmgtGeneralData ... 258
B.3.1.2 Structure of EnS_LmgtGeneralData ... 258
B.3.2 EnS_LmgtActorList ... 259
B.3.2.1 Description of EnS_LmgtActorList ... 259
B.3.2.2 Structure of EnS_LmgtActorList ... 259

B.4 User-defined data types (UDTs) ... 260
B.4.1 EnS_typeActorElement ... 260
B.4.1.1 Description of EnS_typeActorElement ... 260
B.4.1.2 Structure of EnS_typeActorElement ... 260
B.4.2 EnS_typeLmgtActorMeta ... 261
B.4.2.1 Description of EnS_typeLmgtActorMeta ... 261
B.4.2.2 Structure of EnS_typeLmgtActorMeta ... 261
B.4.3 EnS_typeLmgtActorParameter ... 261
B.4.3.1 Description of EnS_typeLmgtActorParameter ... 261
B.4.3.2 Structure of EnS_typeLmgtActorParameter ... 261
B.4.4 EnS_typeLmgtActorParameterSet ... 262
B.4.4.1 Description of EnS_typeLmgtActorParameterSet ... 262
B.4.4.2 Structure of EnS_typeLmgtActorParameterSet ... 262

B.4.5 EnS_typeLmgtActorStatus 263
B.4.5.1 Description of EnS_typeLmgtActorStatus 263
B.4.5.2 Structure of EnS_typeLmgtActorStatus 263
B.4.6 EnS_typeLmgtActorStatusInOut 264
B.4.6.1 Description of EnS_typeLmgtActorStatusInOut 264
B.4.6.2 Structure of EnS_typeLmgtActorStatusInOut 264
B.4.7 EnS_typeLmgtAlarmElement 265
B.4.7.1 Description of EnS_typeLmgtAlarmElement 265
B.4.7.2 Structure of EnS_typeLmgtAlarmElement 265
B.4.8 EnS_typeLmgtControlLimitConfig 265
B.4.8.1 Description of EnS_typeLmgtControlLimitConfig 265
B.4.8.2 Structure of EnS_typeLmgtControlLimitConfig 265
B.4.9 EnS_typeLmgtControlParameters 266
B.4.9.1 Description of EnS_typeLmgtControlParameters 266
B.4.9.2 Structure of EnS_typeLmgtControlParameters 266
B.4.10 EnS_typeLmgtControlParameterSet 266
B.4.10.1 Description of EnS_typeLmgtControlParameterSet 266
B.4.10.2 Structure of EnS_typeLmgtControlParameterSet 266
B.4.11 EnS_typeLmgtControlTimeConfig 267
B.4.11.1 Description of EnS_typeLmgtControlTimeConfig 267
B.4.11.2 Structure of EnS_typeLmgtControlTimeConfig 267
B.4.12 EnS_typeLmgtForecastValues 267
B.4.12.1 Description of EnS_typeLmgtForecastValues 267
B.4.12.2 Structure of EnS_typeLmgtForecastValues 267
B.4.13 EnS_typeLmgtGeneralData 268
B.4.13.1 Description of EnS_typeLmgtGeneralData 268
B.4.13.2 Structure of EnS_typeLmgtGeneralData 268
B.4.14 EnS_typeLmgtJobFeedbackElement 269
B.4.14.1 Description of EnS_typeLmgtJobFeedbackElement 269
B.4.14.2 Structure of EnS_typeLmgtJobFeedbackElement 269
B.4.15 EnS_typeLmgtJobRequestElement 270
B.4.15.1 Description of EnS_typeLmgtJobRequestElement 270
B.4.15.2 Structure of EnS_typeLmgtJobRequestElement 270
B.4.16 EnS_typeLmgtJobRequestStack 271
B.4.16.1 Description of EnS_typeLmgtJobRequestStack 271
B.4.16.2 Structure of EnS_typeLmgtJobRequestStack 271
B.4.17 EnS_typeLmgtJobTaskElement 271
B.4.17.1 Description of EnS_typeLmgtJobTaskElement 271
B.4.17.2 Structure of EnS_typeLmgtJobTaskElement 271
B.4.18 EnS_typeLmgtJobTaskStack 272
B.4.18.1 Description of EnS_typeLmgtJobTaskStack 272
B.4.18.2 Structure of EnS_typeLmgtJobTaskStack 272
B.4.19 EnS_typeLmgtOrganisation 272
B.4.19.1 Description of EnS_typeLmgtOrganisation 272
B.4.19.2 Structure of EnS_typeLmgtOrganisation 272
B.4.20 EnS_typeLmgtTriggerBR 273
B.4.20.1 Description of EnS_typeLmgtTriggerBR 273
B.4.20.2 Structure of EnS_typeLmgtTriggerBR 273
B.4.21 EnS_typeLmgtVisualization 273
B.4.21.1 Description of EnS_typeLmgtVisualization 273
B.4.21.2 Structure of EnS_typeLmgtVisualization 273

C Service & Support 275

C.1 Service & Support 275

Index 279

Basics of the SIMATIC Energy Suite 1

1.1 Energy Management with SIMATIC Energy Suite

Energy management

Globally rising energy costs as well as legal requirements for achieving global climate goals increasingly motivate industrial enterprises to deal with energy data acquisition and energy management. The first step to sustainable energy management is to identify the main energy flows and energy consumers of a company or a production facility and to analyze their consumption characteristics. This is referred to as "energy transparency".

Measures to improve energy efficiency are specified based on the acquired energy data. The measures are subsequently implemented in the most effective sequence, technically and economically. The order of implementation is mainly determined by the factors "savings potential" and "implementation cost". This means measures with medium savings potential and low cost may be preferred to measures with high potential and high costs.

Another aspect is legal requirements. These require regular monitoring and reporting of emissions. The acquired energy data can be used to create company-wide energy transparency and to form complete energy and material balancing.

In addition to acquisition, visualization, archiving, performance indicator calculation and energy reporting of energy data are also important factors in energy management.

Additional to the energy management, optimizing of energy consumptions based on the acquired energy data is becoming vital.

SIMATIC Energy Suite in STEP 7 and WinCC (TIA Portal)

The components of SIMATIC Energy Suite, which we simply refer to as the Energy Suite in the following, enable you to integrate central functions of the energy management even down to the level of your automation system. The configuration is made simply and conveniently directly in the TIA Portal (STEP 7 and WinCC).

Energy Suite records, archives and provides the energy data in the CPU in standardized form. You can then visualize the energy data and use the data in your automation program (e.g. for monitoring).

In Energy Suite, you can additionally optimize energy consumption with the introduction of load management blocks.

Template pictures and faceplates for visualizing the acquired energy data in WinCC Professional or WinCC Basic, Comfort bzw. Advanced are provided by Siemens Industry Online Support .

In addition, you can process the energy data in SIMATIC Energy Manager:

- For performance indicator calculation, for example, energy costs per produced piece, CO_2 emissions per year
- Convenient generation of energy reports, for example, to optimize energy purchasing

Further processing energy data with SIMATIC Energy Manager

You can directly transfer configuration information from Energy Suite into SIMATIC Energy Manager and save the additional configuration work involved. SIMATIC Energy Manager, which we simply refer to as Energy Manager in the following, primarily offers functions for commercial and enterprise-wide assessment of energy consumption. To optimize the energy consumption, the relevant energy flows of all the company's energy media must be transparent.

You use the Energy Manager to create energy and material balances or calculations of performance indicators, for example. The performance indicators (Key Performance Indicator (KPI)) enable you to evaluate and compare the energy used in various processes and plants. The evaluation and comparison is also referred to as "benchmarking". The assignment of energy costs to the actual consumers results in cost transparency and raising awareness of employees in regard to the energy consumption of machinery, processes and plants.

You can find additional information about the Energy Manager at Siemens Industry Online Support (https://support.industry.siemens.com/cs/ww/en/ps/14711).

1.2 SIMATIC Energy Suite operations and components

IPO principle

Energy data processing according to the "IPO" principle can be divided into "Input" "Processing" and "Output":

- Input: Provision of the input data for processing, for example, by measurement hardware or calculations within the S7 CPU
- Processing: Acquisition, calculation and provision of energy values for other systems by acquisition objects in the S7 CPU
- Output: Visualization and archiving of energy values on connected HMI or SCADA systems

Overview

The following figure shows the relationship of the individual Energy Suitecomponents and the processing steps:

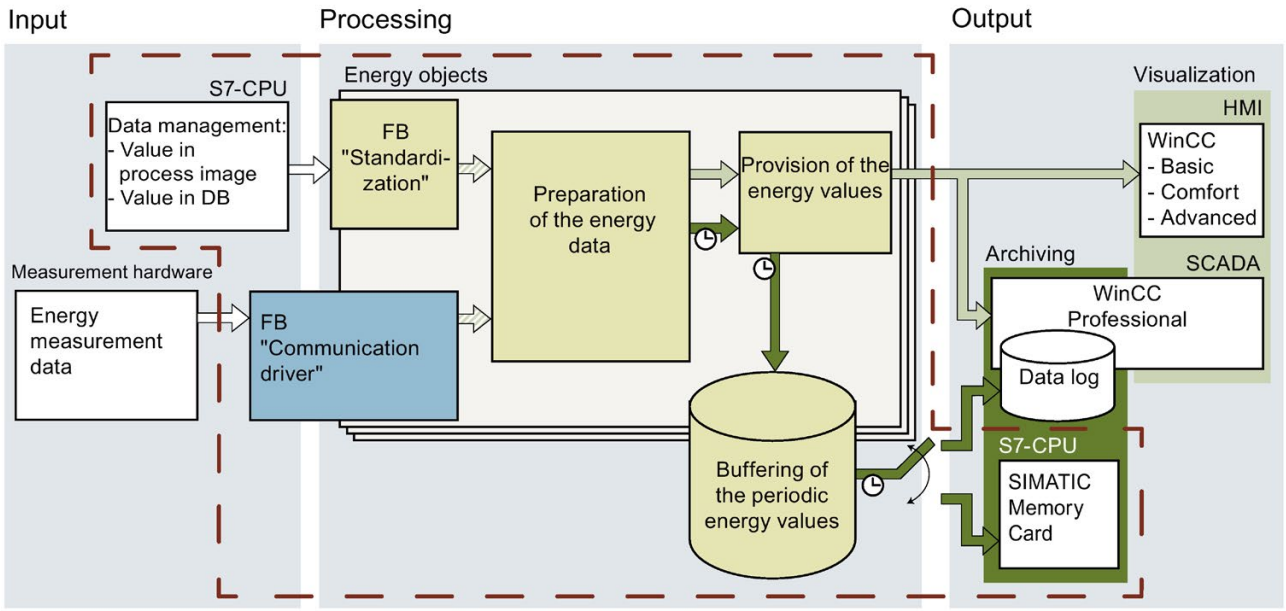

Input measurement data

Raw energy data

Processed instantaneous energy values

Prepared periodic energy values with time stamp

Energy Suite blocks (prefix EnS)

Driver blocks for measurement hardware (prefix EnSL)

FB Function block

Process on an S7 CPU

Components

The following table shows the components for energy data management with the Energy Suite:

Area	Component / processing step	Description
Input - Supply energy data (Page 23)	S7-CPU	S7-1500 CPU configured in STEP 7 project (TIA Portal) Provides the input measurement data to the "Normalization" function block (FB)
	Measurement hardware	Measurement capable hardware of Energy Suite Provides the input measurement data to the "Communication driver" function block (FB)
Processing - Process energy data (Page 33)	FB "Normalization"	Includes the Energy Suite blocks with driver functionality for acquiring, preprocessing and harmonization of input measurement data on raw energy data Provides the raw energy data for the "Preparation of the energy data" processing step The following Energy Suite blocks are used: • EnS_DrvAnalogValue (Page 185) • EnS_DrvCounterLInt (Page 187) • EnS_DrvCounterLReal (Page 189) • EnS_DrvPulse (Page 191)
	FB "Communication driver"	Includes the function blocks with driver functionality (driver blocks) for the supported measurement hardware The driver blocks for the measurement hardware are provided in the form of an Energy Support Library (EnSL) (Page 26) on the SIMATIC Energy Suite product DVD and must be installed separately (not part of the Energy Suite library). Provides the raw energy data for the "Preparation of the energy data" processing step
	Acquisition objects	An acquisition object in the Energy Suite is typically a measuring point (for example, a measuring device or an analog value). The acquisition object represents the central engineering component where all settings are made (for example, the assignment of the archiving period and the energy source data as well as settings for processing of raw energy data).
	Preparation of energy data	Used for calculation, time synchronization and organization of raw energy data (for example, compression and periodic time stamping of the energy values) Passes the prepared instantaneous energy values and prepared periodic energy values with a time stamp to the "Provision of the energy values" processing step The following Energy Suite blocks are used: • EnS_CalcEnergyData (Page 179) • EnS_TimeSync (Page 200) • EnS_Organization (Page 199)

Area	Component / processing step	Description
Processing - Process energy data (Page 33)	Provision of the energy values	Provision of: • Processed instantaneous energy values on "Visualization - HMI" and "Visualization - SCADA" • Prepared periodic energy values with time stamp to "Buffering periodic energy values" The following Energy Suite blocks are used: • EnS_EnergyDataBasic (Page 195) • Ens_EnergyDataAdv (Page 193) • Ens_EnergyDataAdvMinMax (Page 194)
	Buffering of the periodic energy values	Buffering of the processed periodic energy values with a time stamp from several acquisition objects Provides the energy values to: • Archiving - WinCC Professional (Data Log) or • Archiving - S7-CPUs (SIMATIC Memory Card) The following data blocks (DBs) are used by the Energy Suite: • EnS_BufferDB (Page 206) • EnS_BufferWorkDB (Page 207) • EnS_BufferRead (Page 174) • EnS_BufferWrite (Page 176)
Output - Visualizing and evaluating energy data (Page 99)	Visualization - HMI	Visualization of instantaneous energy values on a SIMATIC Comfort Panel or PC with WinCC applications (Basic, Comfort or Advanced)
	Visualization - SCADA	Visualization of instantaneous energy values or the buffered periodic energy values on the WinCC Professional SCADA system
	Archiving - WinCC Professional (DataLog)	Archiving of buffered periodic energy values in the data log of the WinCC Professional SCADA system The following Energy Suite block is used: • EnS_ArchiveHMI (Page 166)
	Archiving - S7-CPUs (SIMATIC Memory Card)	Archiving of buffered periodic energy values as data logs (CSV files) on the SIMATIC memory card inserted in the S7-1500 CPU The following Energy Suite block is used: • EnS_ArchiveDataLog (Page 156)

1.3 Procedural overview

Requirement

To perform the following configuration steps, the following requirements must be met in STEP 7 (TIA Portal):

- The "SIMATIC Energy Suite" add-on package has been installed.

  You can find additional information on this in the installation instructions for Energy Suite on the DVD.
- The STEP 7 project has been created and configured with a CPU S7-1500.
- Valid EnergySuite license must be installed for configuring energy acquisition, and load management program.

Additionally, when using measurement hardware as an energy data source:

- The Energy Support Library for using future measurement hardware has been installed.

  You can find additional information on this in the product documentation for the measurement hardware.
- The measurement hardware has been created and configured in the STEP 7 project.

  You can find additional information on this in the product documentation for the measurement hardware.

Additionally, for visualization or archiving to data logs:

- The PC station has been created and configured in the STEP 7 project with WinCC Professional or WinCC Basic, Comfort or Advanced.

Configuration steps

The following table provides an overview of the most important configuration steps for Energy Data Management with the Energy Suite components:

Topic	Step		Description
Supply energy data	1	Supply energy data (Page 23)	Create and configure connected measurement hardware and/or PLC tags (for example, values of data blocks and/or from the process image) so that they can be later configured as an energy source for the acquisition objects.
Process energy data	2.1	Creating an acquisition object table (Page 36)	Acquisition object tables are used to create and manage the acquisition objects. Several acquisition object tables enable the mapping and structuring of the acquisition objects, for example, based on the measurement hierarchy of your production plant.
	2.2	Adding acquisition objects for acquisition object tables (Page 37)	In order to acquire and process the energy data from a data source of energy, you need to create acquisition objects in the acquisition object tables.
	2.3	Setting the properties of the acquisition objects (Page 40)	Each acquisition object represents a measuring point of your production plant and must be correspondingly configured. • Assign energy data source • Set processing of the input measurement data • Activate the energy values for archiving and assign the archive period • Check the enable of acquisition objects for the energy program

Topic	Step		Description
Buffering and archiving energy data	3.1	Defining archiving periods (Page 57)	From a central location, you manage the periodic time intervals (archiving periods) in which the raw energy data should be calculated to a prepared periodic energy value with time stamp and archived. Each acquisition object can be assigned a desired archiving period.
	3.2	Defining the buffering of periodic energy values (Page 66)	For buffering the periodic energy values, you specify the size of the data blocks (buffer DBs). The number of buffer DBs corresponds to the number of created acquisition object tables (one buffer DB for each acquisition object table).
	3.3	Setting the archiving on a S7-CPU (SIMATIC Memory Card) (Page 61)	Define the name, the number and size of data logs for archiving the periodic energy values on a SIMATIC memory card inserted in the S7 CPU. The energy values are entered in the data logs.
	3.4	Setting the archiving on a PC station with WinCC Professional (Data Log) (Page 64)	For archiving the periodic energy values in the data log of WinCC Professional, select the appropriate check box in the energy program settings of Energy Suite. The data logs of WinCC Professional must be set up for this in the settings of WinCC Professional.
Generate energy program	4.1	Making general settings for the energy program (Page 71)	Before generating the energy program, set the starting time of the blocks in the energy program. You also define the alarm suppression.
	4.2	Check the enable of acquisition objects for the energy program and adapt it if necessary (Page 43)	At the latest before generating the energy program, you need to decide which acquisition objects (and thus which measuring points) are to be included in the energy program. You can easily enable/disable the acquisition objects in the acquisition object tables.
	4.3	Generate energy program (Page 75)	You start the generation of the PLC program for energy data acquisition and processing (or energy program for short) from the project tree. During the generating process, the required blocks and data types from the Energy Suite Library and the measurement hardware library are automatically used in the energy program and interconnected according to the configured acquisition objects. The generated energy program is created below the S7 CPU in the "Energy Suite - Program" subfolder of the "Program blocks" folder.
	4.4	Compiling and downloading the PLC program (Page 93)	Once the energy program is generated, compile the complete PLC program and download it to the S7-1500 CPU target system.
	4.5	Testing the energy program (Page 94)	To check your settings, open the relevant data block of the respective acquisition object in the energy program and watch the online values with the "Monitor all" function.

Topic	Step		Description
Visualizing and evaluating energy data (Page 99)	5.1	Configuring a PC station with WinCC Professional	A PC station with the SIMATIC "WinCC RT Professional" HMI application is required for the SCADA system.
	5.2	Creating a connection to the SCADA system	To enable data transfer between the S7-1500 CPU and the SCADA system, configure an HMI connection to the PC station with WinCC Professional in STEP 7 (TIA Portal).
	5.3	Reading and displaying energy values configured for archiving on the engineering system on the PC station (Page 102)	On the PC station with WinCC Professional, Energy Suite offers an overview of all acquisition objects and the periodic energy values that you have configured in the engineering system for archiving in the data log of WinCC Professional. With the "Refresh" function, synchronization is performed with the engineering data of the S7-1500 CPUs that can be reached by the PC station with WinCC Professional.
	5.4	Configuring the SCADA system (Page 104)	Configuring the PC station with WinCC Professional: • For data transfer to the SCADA system, generate the HMI tags for the data blocks for buffering ("HMI tags" folder). • For archiving, generate the data log with the logging tags (energy values) and set up the archive segments for archiving (Page 107) of the periodic energy values ("Archive" folder). • For visualization of the collected energy data in runtime, you can integrate the template screens and screen elements from the Siemens Industry Online Support into the WinCC application ("Screens" folder).
	5.5	Compiling and downloading the PC station with WinCC Professional	Next you compile the configuration for the entire PC station and download it to the SCADA system.
	5.6	Starting the PLC program and SCADA system (Runtime)	Once WinCC RT Professional is started on the SCADA system and the PLC programs are started on the S7-1500 CPUs, archiving is ready to begin. The selected periodic energy values are archived automatically. The archiving is performed continuously while Runtime is active.

1.4 Performance features and conventions

Compatibility of Energy Suite with CPU and FW

The following table shows the compatibility of CPUs to respective Energy Suite versions.

CPU / ET 200SP CPU / ET 200SP Open Controller	FW	Energy Suite version
S7-1500 CPU	≥ V2.0	V14.0 V14.0 SP1 V15.0 V15.1 V16.0

Performance features of Energy Suite

The following table shows the performance features of the Energy Suite:

Characteristic	Value
Maximum number of acquisition objects that can be licensed per S7-1500 CPU	999 for firmware V2.8, for lower versions it is 500
Maximum number of acquisition object tables per S7-1500 CPU	10
Maximum number of S7-1500 CPUs for simultaneous archiving	10
Maximum number of acquisition objects that can be archived simultaneously (WinCC Professional) Recommendation: distributed to a maximum of 10 S7-1500 CPUs	2000
Minimal adjustable archiving period	1 min
Value range of an archiving period	Integer part of one hour/one day, for example: • 1 minute • 5 minutes • 15 minutes • 12 hours The following are invalid, for example: • 7 minutes • 11 minutes • 5 hours
Maximum adjustable archiving period	24 h
Typical archiving period for electrical variables	15 min
Typical archiving period for non-electrical variables	60 min

Naming conventions

The following table shows the naming conventions for engineering with the Energy Suite:

Object	Value range for name	Range of validity
PLC	• Prohibited characters: – : ? " ' \ * % – <space> – <line feed> – <line break>	• The naming convention of the PLC applies to the archiving of energy data of acquisition objects on PC station with WinCC Professional.
Acquisition object	• 1 - 32 characters • Prohibited characters: – : ? ' * " \ $ % § ° – <Space> – <Line feed> – <Line break>	• Unique project-wide for archiving type "WinCC Professional (data log)"
Acquisition object table	• 1 - 32 characters • Prohibited characters: – <Line feed> – <Line break>	• Unique project-wide for archiving type "WinCC Professional (data log)"
Archiving period	• 1 - 32 characters • Prohibited characters: – : ? ' * " \ % § ° – <Space> – <Line feed> – <Line break>	-
Data log	• 1 - 26 characters • Permitted characters: – 0 ... 9 – a ... z – A ... Z – - – _	-

Note

Unique names

The object names must be unique at least CPU-wide. You cannot use a name that has already been assigned to a block, a PLC tag or a constant within the CPU for a new object. No distinction is made between upper and lower case when checking the uniqueness of the name.

See also

Performance features and conventions (Page 125)

Supply energy data

2

Energy data sources provide the energy data for processing (acquisition, processing, provision) to the acquisition object. The following data sources can be configured as energy sources of an acquisition object:

- Input measurement data from connected measurement hardware (Page 26)
- Energy data from the process image or the bit memory area of the CPU (PLC tags) (Page 29)
- Energy data from data blocks (DB tags) (Page 31)

Data exchange of periodic energy data energy counter value, (pulse signal, energy counter value, power value), from which the basic energy data are calculated, occurs cyclically via the process image. The measurement hardware provides energy data to acquisitionobjects using cyclic and acyclic communication. Advanced energy data, for example, voltage, current or frequency value, are passed in a data record from the measurement hardware to the acquisition object. The maximum number of parallel acyclic communication channels is limited to 10.

You assign acquisition data sources for the energy program when you configure the acquisition objects. Each energy object is assigned an energy data source.

See also

Acquisition objects and energy acquisition program (Page 33)

2.1 Important information on energy data

The following different energy data exists:

- Basic energy data
- Advanced energy data

Basic energy data

Basic energy data includes the following energy data:

- Periodically calculated energy consumption
- Average output per archive period
- Current values for energy and power consumption

Basic energy data is invoice-relevant energy data which is required for visualizing the energy flows in a plant.

Basic energy data is primarily transmitted by cyclical communication via the process image.

Advanced energy data

Advanced energy data are only read from the measurement hardware which can make this data available. Advanced energy data includes the following energy data:

- Phase-specific current, voltage, power and power factor values
- Total power, total energy and total power factor values
- Frequency values

Whether and to what extent the advanced energy data is made available depends on the respective measurement hardware. In addition to supplying the input measured value, the measurement hardware or the driver block also supply the **minimum and maximum values** of the advanced energy data, for example for the output in a faceplate in WinCC Professional.

Advanced energy data is primarily transmitted by acyclic communication in a data record.

Cyclic communication

You use cyclic communication for invoice-relevant energy data (for example, power, energy counters) which is processed for monitoring and calculation functions in the CPU. This data is read cyclically, quickly and reliably via the process image.

For additional information on the process image, refer to the online help for the TIA Portal information system under the keyword "Process image".

Acyclic communication

You use acyclic communication for energy data relevant for visualization (e.g. current, voltage), which is displayed on a SIMATIC Comfort Panel or PC. For the visualization of the screen opening, for example, this data is communicated for the duration of the screen opening.

The energy data is read in a data record with the "RDREC" instruction from the corresponding module. For additional information on the "RDREC" instruction, refer to the online help for the TIA Portal information system under the keyword "RDREC".

The driver blocks for the measurement hardware call the "RDREC" instruction for acyclic communication internally.

Note

Use both types of communication depending on the application. Make sure that the communication channels are not overloaded.

2.2 Energy data from measurement hardware

A variety of devices can provide energy data. In addition to the measuring instruments (e.g. ET 200SP AI EnergyMeter 480VAC ST, SENTRON PAC), the sole purpose of which is to measure energy, many automation devices (for example, frequency converters or protection devices and switchgear) provide energy data in addition to their actual automation functions (for example, speed control). In the following, these devices are referred to as measurement hardware.

Overview of measurement hardware for Energy Suite

The following table shows some examples of devices as measurement hardware that are supported by SIMATIC Energy Suite. For this purpose, specific function blocks (FBs) with driver functionality are available for the measurement hardware from the Energy Support Library (EnSL).

Measurement hardware	Description
AI EnergyMeter 480VAC ST	Analog input module for the SIMATIC ET 200SP distributed I/O system for measuring relevant network parameters in the voltage range up to 480V AC phase-to-phase voltage
AI EnergyMeter 480VAC HF	Analog input module for the SIMATIC ET 200SP distributed I/O system for measuring relevant network parameters in the voltage range up to 480 V AC phase-to-phase voltage Extended applications and functionality; current measurement using Rogowski coils or current and voltage transformers The AI EnergyMeter 480 V AC HF is available in two versions: CT and RC.
SENTRON PAC3200/PAC4200	Multifunctional measuring instrument for measuring and displaying relevant power system parameters in low-voltage power distribution
SENTRON 3VA (8x ETU)	Molded case circuit breakers for low-voltage power distribution equipment, for example, for protecting production equipment against electrical damage
SINAMICS AC/AC	Converters for efficient and economical operation of pumps, fans and compressors, for example
SIMOCODE pro V PN	Motor protection and control device for motor management tasks such as comprehensive protection, monitoring, safety and control functions between the motor feeder and automation system
ET 200SP/M200D Motor Starter	Motor starter for switching and protecting three-phase induction motors and single-phase AC motors
Soft starter 3RW44	Soft starter for limiting the starting current and the starting torque. Both mechanical loads and supply voltage failures can be reliably avoided with this starter.
Soft starter 3RW55	New generation of soft starters for limiting the starting current and the starting torque. Both mechanical loads and supply voltage failures can be reliably avoided with this starter.

Device configuration of measurement hardware in STEP 7 (TIA Portal)

The device configuration of the measurement hardware is performed in STEP 7 (TIA Portal). The following options are available to add the measurement hardware to the hardware configuration of your project:

- Transfer the device directly from the hardware catalog into the network or topology view
- Add a device not contained in the hardware catalog via a **GSD file** (device master data file) or **HSP** (Hardware Support Packages)

If you want to configure measurement hardware that is not contained in the hardware catalog, you need to first install the vendor-supplied GSD file or HSP. Using GSD files or HSP, installed measurement hardware is displayed in the hardware catalog and can then be selected and configured in the project.

You can find additional information about configuring a device using the GSD file or HSP in the online help of the TIA Portal information system.

Driver blocks of the measurement hardware for STEP 7 (TIA Portal)

The energy data (input measurement data) of the measurement hardware are made available in different ways (e.g. differences in the data format or in the data record address).

In addition to the Energy Suite blocks, function blocks (FBs) specific to the measurement hardware with driver functionality are made available through the **Energy Support Library (EnSL)**. These hardware-specific function blocks (referred to as driver blocks in the following), form the interface between the special measurement hardware and your automation system.

The energy data from the measurement hardware is read and uniformly provided to the automation system using driver blocks. In this way, the raw energy data is provided easier and faster to your PLC program and Energy Suite. The Energie Suite blocks are then used to prepare and process raw energy data.

Energy Support Library (EnSL)

Perform the installation of the Energy Support Library according to the installation instructions for the measurement hardware.

After the successful installation of the Energy Support Library:

- The measurement hardware library with the driver blocks is available in STEP 7 (TIA Portal) as a global library. The driver blocks can be used in the PLC program.
- The measurement hardware can be assigned an acquisition object for selecting the energy data source.

You can find additional information about using global libraries in the online help of the TIA Portal information system.

Type of communication

The CPU can read the energy data from the measurement hardware in two ways, with cyclic or acyclic communication. The cyclic energy data is transferred to Energy Suite via the process image and the acyclic energy data is transferred in a data record of the measurement hardware.

The type of the communication between the CPU and the measurement hardware depends on the measurement hardware and the driver blocks used. Normally, the basic energy data is transferred via cyclic communication, advanced energy data is transferred via acyclic communication:

- You use cyclic communication for invoice-relevant energy data (for example, power, energy counters) which is processed for monitoring and calculation functions in the CPU.
- You use acyclic communication for visualization-relevant energy data (e.g. current, voltage) which is displayed on a SIMATIC Comfort Panel or PC.

You can find additional information on communication between the CPU and the measurement hardware used in the documentation of the respective measurement hardware.

Note

If you use multiple pieces of measurement hardware, pay attention to the load on the communication channels that are supported by the CPU used.

See also

Assign energy data source (Page 44)

2.3 Energy data from the process image or bit memory area of the S7-CPU

PLC tags

PLC tags can be used as an energy source for acquisition objects. To do this, create new PLC tags or use existing PLC tags in the PLC program. Depending on the desired energy data type (pulse signal, power value or energy counter value) you assign the created PLC tag to an appropriate data type. You assign the data type of the PLC tag with the declaration in the PLC tag table. You assign the energy data types to energy data sources with the configuration of the acquisition object.

Examples

- A measuring instrument that is not supported by the Energy Support Library provides an power value and a energy counter value. You assign these values to the PLC tags.
- 10 fan motors each have a rated output of 1.5 kW. The motors are controlled by a PLC. In the PLC, the theoretical consumption is derived from the switching states and rated power. For example, if five motors are switched on, the resulting power consumption is 7.5 kW. This calculation is performed in the PLC and can be assigned to the PLC tags.

Overview of the relevant data types for PLC tags

The following table shows the relevant data types for PLC tags for energy data acquisition:

Data type	Description
BOOL	Used to acquire a pulse signal From an acquired binary pulse signal, the resulting energy consumption is calculated using the normalization factor. Example: With a normalization factor of 2 and the physical unit "Wh", 3 pulse signals result in an energy consumption of 6 Wh.
REAL, LREAL, SINT, USINT, INT, UINT, DINT, UDINT, LINT, ULINT, DWord	Used to acquire a power value The acquired power value is standardized and the resulting energy consumption calculated. Example: Average power consumption of 180 kW over 10 seconds corresponds to energy consumption of 0.5 kWh or 500 Wh.
REAL, LREAL, SINT, USINT, INT, UINT, DINT, UDINT, LINT, ULINT, LWord	Used to acquire an energy counter value The power consumption and the instantaneous value of the power consumption is calculated from the change of the absolute energy counter value using the normalization factor. Example: The counter states of an energy counter change in 10 seconds from 6,734,392 Wh to 6,734,414 Wh. This corresponds to an energy consumption of 22 Wh and an instantaneous value of the power consumption of 7.92 kW.

Declaring PLC tags for energy data acquisition

To declare the PLC tags for energy data acquisition, create the PLC tags in a PLC tag table according to the standard procedure. Depending on the energy data type, you assign the PLC tags the appropriate data type.

You can find additional information about the procedure in the online help of the TIA Portal information system under "Declaring tags in the PLC tag table".

See also

Assign energy data source (Page 44)

2.4 Energy data from data blocks

DB tags

DB tags can be used as an energy source for acquisition objects. To do this, create new DB tags in data blocks or use existing DB tags in the PLC program.

Depending on the desired energy data type (pulse signal, power value or energy counter value) you assign the created DB tag to an appropriate data type. You assign the data type of the DB tag or an element in the declaration table for the data blocks. You assign the energy data types to energy data sources with the configuration of the acquisition object.

Overview of data types for DB tags

The following chart shows the different data types for DB tags for energy data acquisition:

Data type	Description
BOOL	Used to acquire a pulse signal From an acquired binary pulse signal, the resulting analog power value is calculated using the normalization factor. Example: With a normalization factor of 2 and the physical unit "Wh", 3 pulse signals result in an energy consumption of 6 Wh.
SINT, USINT, INT, UINT, DINT, UDINT, LINT, ULINT, DWord	Used to acquire a power value The acquired power value is standardized and the resulting energy value calculated. Example: Power consumption of 180 kW over 10 seconds corresponds to energy consumption of 0.5 kWh or 500 Wh.
REAL, LREAL	
SINT, USINT, INT, UINT, DINT, UDINT, LINT, ULINT, LWord	Used to acquire an energy counter value The power consumption and the instantaneous mean power consumption is calculated from the change of the absolute energy counter value using the normalization factor. Example: The counter states of an energy counter change in 10 seconds from 6,734,392 Wh to 6,734,414 Wh. This corresponds to an energy consumption of 22 Wh and an average power consumption of 7.92 kW.
REAL, LREAL	

Declaring DB tags for energy data acquisition

To declare the DB tags for energy data acquisition, create corresponding data blocks and define their structure according to the standard procedure.

You can find additional information about the procedure in the online help of the TIA Portal information system under "Editing properties of tags in data blocks".

See also

Assign energy data source (Page 44)

Process energy data

3

3.1 Acquisition objects and energy acquisition program

For processing raw energy, define acquisition objects in STEP 7 (TIA Portal) in the project tree below the S7-1500 CPU. The acquisition objects are used for process-specific configuration of raw energy data and the subsequent generation of an energy program.

There is the new "Energy acquisition" folder in the project tree for this after the successful installation of SIMATIC Energy Suite. The following figure shows the "Energy objects" folder in the project tree.

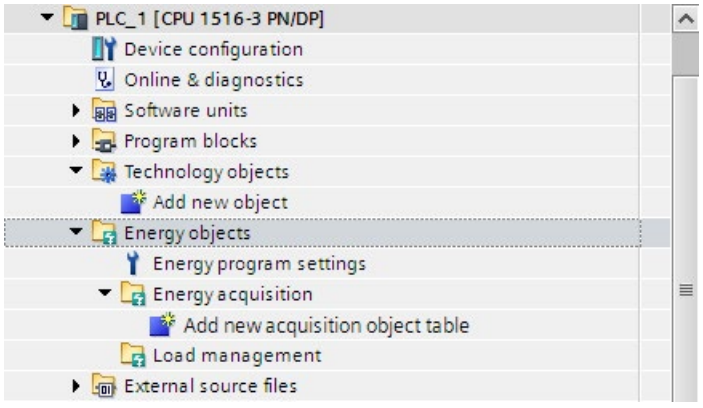

Acquisition objects

Each acquisition object represents a measuring point of your production plant. You use the parameter setting of acquisition object to define the processing of the input measurement data to energy values that can be subjected to analysis.

To define the periodic calculation of energy values, assign each acquisition object an archiving period. This enables you to define the intervals at which the acquired raw energy data for a periodic energy value are to be compressed and archived with their time stamp. Often, an electric power value is archived in 15 min. periods and a non-electric energy value (e.g., gas) is archived in 60 min. periods. You can centrally create manage multiple archiving periods independent of the acquisition objects.

You create and manage acquisition objects in acquisition object tables and also configure Load management through Energy acquisition node. Several acquisition object tables enable the structuring of the acquisition objects, for example, based on the hierarchy of the measuring points in your production plant.

You can find additional information about the possible number of acquisition objects and acquisition object tables in the section "Performance features and conventions (Page 21)".

Energy program

Based on the configured acquisition objects and the archiving periods, a PLC program is generated for the acquisition, processing and archiving of energy data. This program is referred to as the "energy program" in the following.

When the energy program is generated, blocks from the supplied Energy Suite library and from the measurement hardware library (Energy Support Library) are automatically created and interconnected according to the configuration of the acquisition objects. Before the start of the generation of the energy program, you have the option to select those measuring points that should be taken into account in the energy program by enabling the acquisition objects.

Once the energy program is generated, it is available in the project tree below the CPU in the "Program blocks" > "Energy Suite - program" folder together with all the required components.

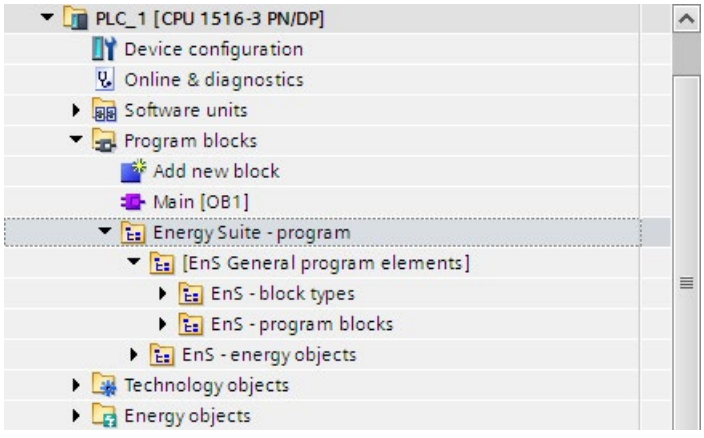

Load Management

Load management blocks in SIMATIC Energy Suite V16.0 acts as a monitoring component which ensures the power and energy consumption does not exceed the user defined limit energy value. You can find more information on Load Management in the section "Optimizing energy consumptions (Page 121)".

Programming rules

Note

The "EnS_" and "EnSL_" prefix is reserved for the Energy Suite.

Before generating the energy program, make sure that the prefix "EnS_" and "EnSL_" is not used in your existing PLC program (user blocks, tags, UDTs or technology objects). In this way, you avoid unintentional overwriting when generating the energy program.

Note

The "Energy Suite - Program" folder is a reserved area for the Energy Suite.

Before generating the energy program, make sure that no parts of your existing PLC program are located in the "Energy Suite program" folder. In this way, you avoid unintentional overwriting when generating the energy program.

3.2 Creating an acquisition object table

First, create acquisition object tables below the CPU in the "Energy acquisition" folder. Consider in advance how you want to structure the acquisition objects over multiple acquisition object tables. The number of acquisition object tables affects the maximum buffer duration (Page 66).

You can find additional information about the possible number of acquisition object tables and naming conventions in the section "Performance features and conventions (Page 21)".

Requirement

- An S7-1500 CPU is created in the project.

Procedure

To create an acquisition object table, proceed as follows:

1. Open the S7-1500 CPU in the project tree.
2. Open the "Energy objects" folder below the S7-1500 CPU.
3. Open the "Energy acquisition" folder.
4. Double-click on the "Add new acquisition object table" object.

   A new acquisition object table is created directly in the "Energy aquisition" folder.
5. In the shortcut menu of the new acquisition object table, select the "Rename" command and enter the desired name in adherence with the naming conventions (Page 21).

If needed, create additional acquisition object tables in the same way. Continue creating acquisition object tables below any other S7-1500 CPUs.

3.3 Adding acquisition objects for acquisition object tables

In order to process the energy data, create acquisition objects in the acquisition object tables for the measuring points of your production plant. Consider how you want to structure the acquisition objects over multiple acquisition object tables.

You can find additional information about the possible number of acquisition objects and naming conventions in the section "Performance features and conventions (Page 21)".

Requirement

- An acquisition object table has been created in the "Energy acquisition" folder below the S7-1500 CPU.

Procedure

To create an acquisition object, follow these steps:

1. Open the "Energy objects" folder below the S7-1500 CPU.
2. Open the "Energy acquisition" folder.
3. Double-click on the acquisition object table in which you want to enter the acquisition object.

   The acquisition object table opens in the working area.
4. Double-click "<Add new>" in the "Name" column of the acquisition object table.

   A new acquisition object is created in the acquisition object table.

Create additional acquisition objects for all acquisition object tables in the same way. Continue creating acquisition objects below any other S7-1500 CPUs.

Result

Each row of an acquisition object table represents an acquisition object. You can clearly view the most important properties features of the acquisition objects directly in the acquisition object table and change them necessary. This includes:

- Name of the acquisition object
- Energy data source of the acquisition object
- Enable status of the acquisition object for the energy program
- Configuration of specific properties of the acquisition object (processing properties)
- Archiving period of the acquisition object
- Periodic forecast for activating the load management (Page 121)

The following figure shows an acquisition object table in the working area of STEP 7 (TIA Portal):

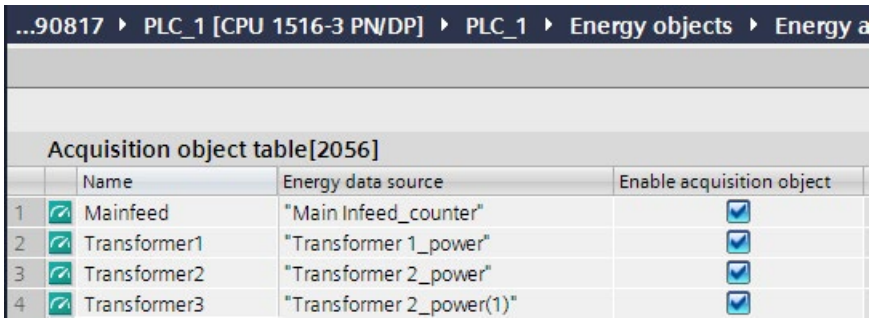

When an acquisition object is selected in the acquisition object table in the working area of the Inspector window of STEP 7 (TIA Portal), the specific properties of the acquisition object are displayed. Setting for these properties is described in the following sections.

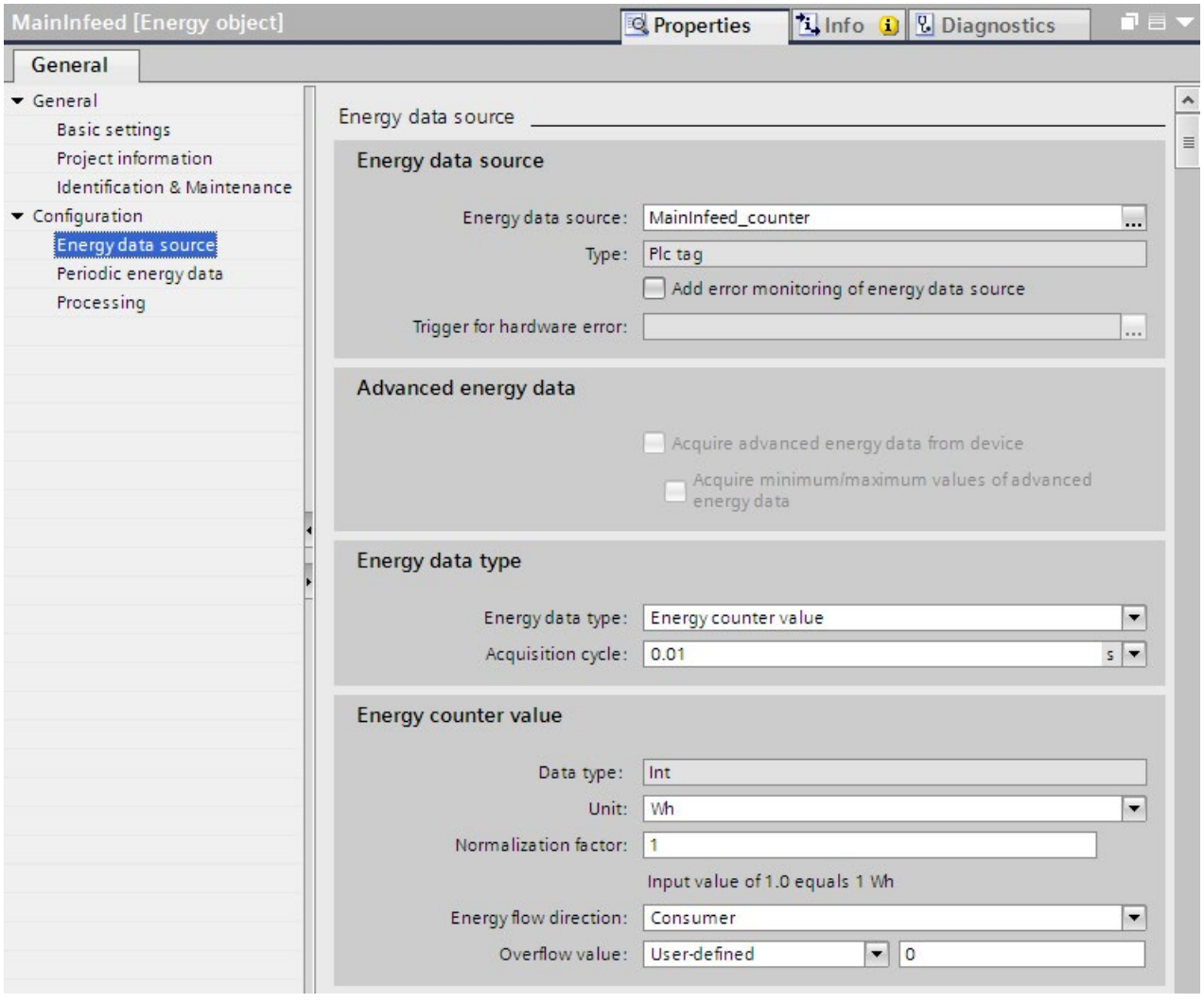

Copying acquisition objects

Acquisition objects can be copied between the acquisition object tables via the shortcut menu. After copying, check the properties of the acquisition object and adapt the copied settings as needed.

See also

Configuring an acquisition object (Page 40)

Change the enable for acquisition objects for the energy program (Page 43)

3.4 Setting the properties of the acquisition objects

3.4.1 Configuring an acquisition object

Each acquisition object represents a measuring point of your production plant and is correspondingly configured by you. You configure an acquisition object in the "Properties" Inspector window.

Note

Alternatively, you can display or hide the most important parameters of the acquisition object in the acquisition object table or (via the shortcut menu of the table header). The settings of the acquisition objects can be clearly displayed and also changed in the acquisition object table individually assembled in this way.

For each acquisition object, you define:

- Data source of raw energy data
- Parameters for the acquisition and processing of energy data
- Parameters for archiving energy data (e.g. archiving period)
- Enable of the acquisition object for the energy program

The energy program is generated based on the configured properties.

Requirement

- An acquisition object has been created in the acquisition object table.

Procedure

To open the "Properties" Inspector window of an acquisition object, follow these steps:

1. Open the "Energy objects" folder in the project tree.
2. Double-click on the energy acquisition table in which the acquisition object has been created.
   The acquisition object table with the acquisition objects opens.
3. Click on the desired acquisition object in the acquisition object table.
   All parameters of the acquisition object are displayed in the "Properties" Inspector window.

The configuration of the acquisition object is described in detail in the following sections.

See also

Basic settings (Page 41)

Energy data source (Page 44)

Periodic energy values (Page 51)

Processing (Page 54)

3.4.2 Basic settings

The following table shows the basic settings of an acquisition object:

Setting	Description
Name	CPU-wide unique name of the acquisition object. The name appears in the acquisition object table and can be changed according to individual requirements. Valid name length: 1 - 32 characters The following characters are prohibited: ? ' * " \ % § ° You can find additional information about naming conventions in the section "Performance features and conventions (Page 21)".
Comment	Optional short description of acquisition objects, for example, about the purpose or the data source of acquisition object.
Enable acquisition object	• When this check box is selected, the acquisition object is enabled for generating the energy program. • When the check box is not selected, the acquisition object is not used in the energy program. If the number of Runtime licenses for the Energy Suite (Page 73) is fewer than the number of enabled acquisition objects, the generation of the energy program is canceled and an error alarm is displayed. Acquisition objects that are not enabled are ignored by the license count.
Date created	The creation date corresponds to the date on which the acquisition object was added to the acquisition object table. The creation date cannot be changed.
Last modified	The date of modification corresponds to the date on which the acquisition object was last changed. The date of modification is updated each time a change is made to the properties of the acquisition object. The date of modification cannot be changed.

See also

Configuring an acquisition object (Page 40)

Change the enable for acquisition objects for the energy program (Page 43)

3.4.3 Project information

The following table shows the settings of the acquisition object under "Project information":

Setting	Description
Acquisition object detection	The acquisition object identifier is assigned automatically when you create the acquisition object. The acquisition object identifier is used internally for addressing and identification of the acquisition object. The acquisition object identifier cannot be changed.
Author	Name of the editor of the acquisition object. The name can be changed according to individual requirements. The user logged onto the operating system is set by default.

See also

Configuring an acquisition object (Page 40)

3.4.4 Identification & Maintenance

The following table shows the settings of the acquisition object under "Identification & Maintenance":

Setting	Description
Plant designation	The plant designation defines the measuring point to which the acquisition object is assigned within the process plant.
Location identifier	The location ID defines the exact location of the measuring point to which the acquisition object is assigned within the process plant.
Installation date	Date on which the measuring point assigned to the acquisition object was installed in the plant. The date can be selected from the calendar dialog box.
Additional information	Additional information about the measuring point assigned to the acquisition object, for example, the intended use of the measurement hardware.

See also

Configuring an acquisition object (Page 40)

3.4.5 Change the enable for acquisition objects for the energy program

You can change the inclusion of the individual acquisition objects for generating the energy program. After adding a new acquisition object, the enable is active (default setting). It may be useful to disable this setting for some applications (e.g. for testing purposes or to make maximum use of runtime licenses):

Note

Acquisition objects that are not enabled are ignored by the Runtime licensing (Page 73).

You have the following options for this:

- In the Inspector window: when creating the acquisition object and assigning parameters to it
- In the acquisition object table: central and clear for all associated acquisition objects

Procedure

To change the enable of the acquisition object for the energy program in the Inspector window, follow these steps:

1. Open the "Energy objects" folder in the project tree.
2. Double-click on the acquisition object table in which the acquisition object has been created.

   The acquisition object table with the created acquisition objects opens.
3. Click on the desired acquisition object in the acquisition object table.

   All parameters of the acquisition object are displayed in the "Properties" Inspector window.
4. Select/clear the check box "Enable acquisition object" for the basic settings.
   - Activated: The acquisition object is enabled for generating the energy program.
   - Deactivated: The acquisition object is not used for generating the energy program.

This setting for the acquisition object is also updated within the "Enable acquisition object" column of the acquisition object table. Alternatively, you can select/clear the check box in the acquisition object table.

3.4.6 Energy data source

3.4.6.1 Assign energy data source

In order to create an energy program, each acquisition object requires an energy data source that provides energy data. The following sources are available as energy data sources for the acquisition objects:

- Input measurement data from connected measurement hardware (Page 26)
- Energy data from the process image or the bit memory area of the CPU (PLC tags) (Page 29)
- Energy data from data blocks (DB tags) (Page 31)

You have the following options for assigning the energy data source:

- In the Inspector window: when creating the acquisition object and assigning parameters to it
- In the acquisition object table: central and clear for all associated acquisition objects

Requirement

- The PLC tags and DB tags are declared for energy data acquisition.
- The measurement hardware for power data acquisition is configured below the S7-1500 CPU.
- The Energy Support Library with the driver blocks for the measurement hardware is installed.

In the Inspector window

To assign an energy data source to a acquisition object, follow these steps:

1. Open the "Energy objects" folder in the project tree.
2. Double-click on the acquisition object table in which the acquisition object was entered.

   The acquisition object table with the created acquisition objects opens.
3. Click on the desired acquisition object in the acquisition object table.

   The properties of the acquisition object are displayed in the "Properties" Inspector window.
4. Select the "Configuration > Energy data source" item in the navigation area.
5. Right-click on the "Energy data source" field.

   The selection dialog with PLC/DB tags declared CPU-wide or with the modules of the available measurement hardware opens.
6. Navigate to the desired energy data source in the selection dialog.
7. Apply the select by clicking on the green check mark in the selection dialog.

Based on the selected energy data types in the "Energy data type" area, the energy data source can be selected. You can make additional settings for the energy data type (Page 48) in the Inspector window.

The assigned energy data source is also updated within the "Energy data source" column of the acquisition object table.

In acquisition object table

To assign or change the energy data source for multiple acquisition objects when needed, follow these steps:

1. Open the "Energy objects" folder in the project tree.
2. Double-click on the acquisition object table in which the acquisition objects were entered.

   The acquisition object table with the created acquisition objects opens.
3. Click on the table field in the row of the acquisition object in the "Energy data source" column.

   The selection dialog with PLC/DB tags declared CPU-wide or with the modules of the available measurement hardware opens.
4. Navigate to the desired energy data source in the selection dialog.
5. Apply the select by clicking on the green check mark in the selection dialog.

The assigned energy data source is also updated in the "Properties" Inspector window. You can make additional settings for the energy data type (Page 48) in the Inspector window.

3.4.6.2 Energy data source

The following table shows the settings of the acquisition object under "Energy data source":

Setting	Description
Energy data source	The energy data sources available for selection are: • Measurement hardware module with the input measured data of the measuring point or • PLC tag with the values from the process image or DB The energy data sources must be created and configured before parameter assignment of the acquisition objects. Afterwards, they are available in the selection dialog for the energy data source.
Type	Depending on the selected energy source for the energy acquisition, the corresponding type of energy data source is displayed. The type of energy data source cannot be changed.
Add error monitoring of energy data source	Error monitoring for energy data sources that do not have integrated error monitoring (e.g. for analog energy values). You program the evaluation of the hardware error in the PLC program for this purpose. If a fault occurs at the input signal of the energy data source, the trigger for hardware error is set. Conventions for the signal: • Minimum duration of 2 times the value at the "Acquisition cycle" setting • Rising edge: incoming error • High-level: Error is present • Falling edge: outgoing error • Low-level: No error The only error events recorded are those that have been pending at least for the duration of the acquisition cycle. You can find additional information on the acquisition cycle in the section Energy data type (Page 48). When this check box is selected, the tag for the trigger for hardware error can be selected.

Setting	Description
Trigger for hardware error	Selection of the tag for the trigger for hardware error If an invalid energy value is detected from an energy data source that has no integrated error monitoring, then the selected tag of the "BOOL" data type is set and the "Hardware error" error message is generated. The evaluation of the tag for the hardware error trigger must be programmed accordingly to the conventions for the signal in order to diagnose an incoming error at a falling edge. You can find the conventions for the signal in the description of the setting "Add error monitoring of energy data source". Example: • A measuring device that is not supported by the Energy Support Library provides an analog power value. • In addition, the measuring device provides a binary output which generates a falling edge in case of a fault. Can only be selected when the "Add error monitoring of energy data source" check box is selected.

Advanced energy data

The following table shows additional options for the acquisition objects which are configurable using data source as measurement hardware under "Energy data source":

Setting	Description
Acquire advanced energy data from device	Functional only if the acquisition object is configured with the hardware device as energy data source. The advanced energy data source is acquired from the device. The check box "Acquire advanced energy data from device" should be disabled and deactivated as advanced data for unsupported hardware device (Example: SINAMICS).
Acquire minimum/maximum values of advanced energy data	Functional only if the acquisition object is configured with the hardware device as energy data source, and contains minimum and maximum values of advanced energy data.

See also

Assign energy data source (Page 44)

Important information on energy data (Page 24)

3.4.6.3 Energy data type

Depending on the energy data source of the energy acquisition object, the following energy data types are processed.

Energy data type

The following table shows the available energy data types with corresponding units and examples:

Setting	Unit	Example
Pulse signal	Wh l hl m³ m³ [n] kg t pcs	With a normalization factor of 0.5, six pulses correspond to 3 Wh.
Energy counter value	Wh l hl m³ m³ [n] kg t pcs	The counter states of an energy counter change in ten seconds from 6,734,392 Wh to 6,734,414 Wh. The difference corresponds to an energy consumption of 22 Wh and an average power consumption of 7.92 kW. Resetting the energy count value during an active archiving period results in the calculation of incorrect energy values for this archiving period. The following applies for a valid energy counter value: • Energy counter value < Overflow value
Power value	W l/h hl/h m³/h m³/h [n] kg/h t/h pcs/h	Average power consumption of 180 kW over ten seconds corresponds to energy consumption of 0.5 kWh or 500 Wh.

Acquisition cycle

The driver blocks for the acquisition of energy data are called once per acquisition cycle.

The following acquisition cycles can be selected:

- 0.01 s
- 0.02 s
- 0.05 s
- 0.1 s
- 0.2 s
- 0.3 s
- 0.5 s
- 1 s
- 2 s

The following default values are set:

- Pulse signal: 0.01 s
- Energy counter value: 1 s
- Power value: 0.1 s

Settings for selected energy data type

The following table shows the additional settings for the selected energy data type:

Setting	Description
Data type	Only visible with energy data type "Energy counter value" The data type of the energy counter value is displayed depending on the selected energy data source that provides the energy counter value. The Energy data source displays data type based on the input type of acquisition object selected under Energy data type: • Pulse signal - Supports only boolean tags • Energy counter value - Supports LReal,Real, Lint,Dint,Int, SInt,ULint,UDInt,UInt,USInt,LWord • Power value - Supports LReal,Real, Lint,Dint,Int, SInt,ULint,UDInt,UInt,USInt,DWord The same data types are displayed for the Energy data source under the Properties area.
Unit	Physical unit of the energy value • Units for pulse signal: Wh, l, hl, m³, m³ [n], kg, t, pcs • Units for energy counter value: Wh, l, hl, m³, m³ [n], kg, t, pcs • Units for power value: W, l/h, hl/h, m³/h, m³/h [n], kg/h, t/h, pcs/h

Setting	Description
Normalization factor	Specifies the value by which the acquired energy value is multiplied to convert this energy value into the selected unit (e.g. "W" or "Wh" or "m³" or "m³/h"). Preset to 1.0 by default. Permissible value range: 0 – 9999999 Example: A measuring instrument provides an output value of 3.7 with the "kWh" unit. Settings for this in the Energy Suite: • Unit: Wh • Normalization factor: 1000 Energy Suite processed the value to 3700 Wh.
Energy flow direction	Configuration of the energy flow direction • Consumer The energy is drawn from the power grid by the consumer (for example, an electrical machine in motor mode). • Producer The energy is fed into the power grid by the producer (for example, an electric machine in producer mode).
Overflow value	Only for "energy counter value" energy data type Specifies the value at which the energy counter value is reset to 0. 1000000 (1*10^6) is set by default. Assignable values: • 1000000 (1*10^6) • 1000000000 (1*10^9) • 1000000000000 (1*10^12) • User-defined
User-defined overflow value	Configurable only with overflow value = "User-defined" Manual specification of the overflow value at which the energy counter value is reset to 0. Permissible value range: 1 - 1.0e+15

See also

Assign energy data source (Page 44)

3.4.7 Periodic energy values

3.4.7.1 Setting energy values for periodic archiving

The acquired energy data are archived after processing as periodic energy values together with their time stamps. Depending on the selected energy data type, different energy values can be set for archiving.

During the configuration of the acquisition object, you select the periodic energy values and the archiving period in the Inspector window for this.

Requirement

- The archiving periods with different values are created at a central location in the settings for the energy program.

  You can find additional information on this in the section "Defining archiving periods (Page 57)".

Procedure

To define the periodic energy values for an acquisition object for archiving, follow these steps:

1. Open the "Energy objects" folder in the project tree.
2. Double-click on the acquisition object table in which the acquisition object has been created.

   The acquisition object table with the created acquisition objects opens.
3. Click on the desired acquisition object in the acquisition object table.

   The properties of the acquisition object are displayed in the "Properties" Inspector window.
4. Select the "Configuration > Periodic energy data" item in the navigation area.
5. Select the check box for the desired energy values:
   - Power consumption
   - Energy consumption
   - Energy counter value (can only be enabled for the energy counter value energy data type)
6. Right click on the "Archiving period" field.

   The table with the centrally created archiving periods (Page 57) for the energy program opens. If no custom archiving periods have been created previously, there are only two archiving periods (15 min., 60 min.) to choose from by default.
7. Click on the desired archiving period and apply the selection by clicking the green check mark in the selection dialog.

3.4.7.2 Periodic energy data

The acquired energy data are archived after processing as prepared periodic energy values together with their time stamps. Depending on the selected energy data type, different energy values are available for archiving.

Periodic energy values

The following table shows the periodic energy values for archiving:

Setting	Description
Power consumption	Average power consumption per archiving period. Archiving for the following selected energy data types possible: • Pulse signal • Energy counter value • Power value
Energy consumption	Energy consumption per archiving period. Archiving for the following selected energy data types possible: • Pulse signal • Energy counter value • Power value
Energy counter value	Energy counter value per archiving period. Archiving for the following selected energy data types possible: • Energy counter value
Forecast	Acquisition objects for load management are generated only if you select the Forecast option.

Assignment of the archive period

By selecting the archiving period, the acquisition object and thus also the selected energy value is assigned to the periodic period for calculation and archiving. You assign exactly one archiving period to each acquisition object.

You create new archiving periods with the central settings for the energy program (Page 57). You can choose the archiving period as a default value for an acquisition object by selecting the "Default" checkbox in the "Archiving periods" dialog. For more information about archiving periods see "Archiving periods (Page 59)".

Note

Avoid using the same measurement hardware multiple times as energy data source

Make sure that the same measurement hardware is used only once as energy data source in the energy program to prevent overload of the communication channels.

Example for assignment of multiple archiving periods

To archive the energy consumption, for example, with a 15-minute and a 60-minute archiving period, create an acquisition object for each archiving period.

1. For the acquisition object with the 15-minute archiving period, select the measurement hardware as energy data source and activate archiving of the energy consumption. Then generate the energy program.en
2. For the acquisition object with the 60-minute archiving period, select the "energy" output parameter of the driver block of the measurement hardware as energy data source. Next, activate archiving of the energy consumption for the acquisition object and generate the energy program again.

In this way, the energy consumption of a measuring point is archived in two archiving periods, and the measurement hardware is used only once as energy data source in the energy program.

3.4.8 Processing

3.4.8.1 General processing settings

The following table shows the settings of the acquisition object under "Processing":

Setting	Description
General processing settings	
Internal processing cycle	For each internal processing cycle, the energy data activated for archiving is calculated and refreshed once. The following duration can be selected for the internal processing cycle: • 0.1 s • 0.2 s • 0.5 s • 1 s The internal processing cycle can be changed for faster updating of the energy data, for example for: • Visualizing energy data • Further processing of the energy data by the user program (for example, load management) Set to 1 s by default.
Calculation of current value of power consumption	
Calculation interval	Used for calculation of current value of power consumption. The current value of power consumption is calculated from the energy consumption for each calculation interval. The calculated instantaneous value corresponds to the average over the duration of the calculation interval. Can only be edited when energy data type "Energy counter value" or "Pulse signal" is selected. The following duration can be selected for the calculation interval: • 1 s • 2 s • 3 s • 4 s • 5 s • 6 s • 10 s • 15 s • 20 s • 30 s • 60 s 10 s is set by default.

Setting	Description
Extend calculation interval	The dynamic extension of calculation interval allows the calculation of current value of power consumption with additional acquisition time. Example: A pulse is output every 4 s with constant power consumption. When a default calculation interval of 10 s is configured • 2 pulses are counted in the first calculation interval instead of 2 1/2 • 3 pulses are counted in the second calculation interval With an extension of the calculation interval of 5 s • 3 pulses are counted in the first calculation interval • 3 pulses are counted in the second calculation interval The second calculation interval starts after 12 s beginning with the first calculation interval.
Extension of calculation interval	Calculation of current value of power consumption starts when one of the following requirements is met: • The energy counter value has changed. • At least the duration of the extension of calculation interval has expired. • The consumer has been switched off. The following duration can be selected for the extension of calculation interval: • 1 s • 2 s • 3 s • 4 s • 5 s • 6 s • 10 s • 15 s • 20 s • 30 s • 60 s

Buffering and archiving energy data 4

4.1 Defining archiving periods

Archiving periods

Archiving periods are periodic time intervals in which the raw energy data of the respective acquisition object in the CPU are processed to a periodic energy value with a time stamp and then - depending on the setting - archived in the CPU (SIMATIC Memory Card) or in WinCC Professional (Data Log) (for example, every 15 minutes).

To ensure plant-wide energy values from all acquisition objects are archived at the same time, the configured duration of the archiving period can be synchronized to an internal or external timer:

- By default, the internal CPU clock is used as a timer for all blocks of the energy program. For this, you synchronize the CPU time with an external time server (for example, NTP). You can find additional information on this in the online help of the TIA Portal information system under the key "Time-of-day synchronization (S7-1500)".
- To synchronize with an external clock (for example, synchronization signal of a utility company), enable the external pulse and configure its pulse source.

You create the various archiving periods at a central location in the settings for the energy program. When you configure the acquisition object, you then assign the respective archiving period to each individual acquisition object.

You can find additional information about the naming conventions of archiving periods in the section "Performance features and conventions (Page 21)".

UTC

Note

Set the time of the CPU to UTC, for example, to avoid a time difference when switching to daylight saving time.

Setting the time of day for the CPU corresponds to the standard procedure and therefore occurs outside the Energy Suite in the online and diagnostics view of the CPU.

You can find additional information on this in the online help of the TIA Portal information system in the section "Determining and setting the time of a CPU".

Procedure

To create new archiving periods in the central administration dialog, follow these steps:

1. Open the "Energy objects" folder in the project tree.
2. Double-click on the "Energy program settings" object.

   The dialog with the settings for the energy program opens in the working area.
3. Select "Archiving periods" in the navigation area.

   The table with the central management of the archiving periods opens. Each row of the table represents an archiving period. If no custom archiving periods have been created previously, the table only contains two archiving periods (15 min., 60 min.) to choose from by default.
4. Only for 24h archiving periods: Use the "Apply time zone settings from the regional settings of the local engineering PC" check box to set the time zone (difference to UTC time) for the synchronization:
   - Activated: The time zone of the local engineering PC is used.
   - Deactivated: The time zone from the following drop-down list is used. Select the desired time zone from the drop-down list.
5. To create another archiving period, double-click "<Add>" in the "Name" column of the table.

   A new archiving period is created in the table.
6. Create additional archiving periods in the same way, if required.
7. Make the settings for each archiving period:
   - Name of the archiving period
   - Duration of archiving period
   - Unit for duration of archiving period
   - Defauit
   - Synchronization with external pulse (timer) and selection of the pulse source.

The meaning of the settings is described in detail in the section "Archiving periods (Page 59)".

4.2 Archiving periods

You create the various archiving periods at a central location in the settings for the energy program. When you configure the acquisition object, you then assign the respective archiving period to each individual acquisition object.

Two archiving periods (15 min., 60 min.) with an internal clock for the synchronization are preset by default.

Time zone

The following table shows the time zone settings for synchronization under "Archiving periods". The time zone settings are only valid for the synchronization of the archiving periods with a duration of 24 hours.

Setting	Description
Apply time zone settings from the regional settings of the local engineering PC	• Activated: The 24 hour archiving periods are synchronized based on the time zone settings from the regional settings of the local engineering PC. • Deactivated: Selection of the required time zone for synchronization of the 24 hour archiving periods from the drop-down list. Deactivated by default.
Time zone	Time zone (difference to UTC time) Archiving periods with a duration of 24 h are synchronized at 0:00:00:000 UTC time. In case of an offset between UTC time and regional time, synchronization of the 24 h archiving period can be adjusted based on the selected time zone. The time zone can only be selected when the "Apply time zone settings from the regional settings of the local engineering PC" check box is cleared.

Archiving periods

The following table shows the settings for new archiving periods in central administration:

Setting	Description
Name	Two archiving periods (15 min., 60 min.) with an internal clock for the synchronization are preset by default. If different values are needed for the duration, create additional archiving periods. The name of the archiving period is unique CPU-wide and can be changed according to individual requirements. Recommendation: Use in the name of the duration of the archiving period (for example, UserPeriod_15min) You can find additional information about naming conventions in the section "Performance features and conventions (Page 21)".
Duration	Period at the end of which the energy values are periodically calculated and archived. The time stamps are generated based on the time period. Example: With an archiving period of 15 min., time stamps are generated in 15 min. increments (starting at the top of the hour). The prepared periodic energy values are archived together with the respective time stamps: • As a CSV file internal to the CPU on the SIMATIC memory card or • In the data log of the WinCC Professional SCADA system 15 min is set by default for newly added archiving periods.
Unit	Unit for the time period in which a periodic energy value is calculated and stored. The following units can be set: • min = minutes • h = hours
Default	Allows you to retain the archiving period as default while configuring the acquisition object table. Deactivated by default.
External pulse	An external pulse triggers the clock for synchronization of the archiving period. • With selected check box, you assign the synchronization signal (e.g. from a utilities company) to the external pulse in the "Pulse source" column. • When the check box is not selected, the internal CPU clock triggers the synchronization of the archiving period. The internal CPU time is synchronized with an external time server to UTC time (for example, with NTP) to form the time stamp. Deactivated by default.
Pulse source	A tag of data type "BOOL" can be selected as the pulse source. The tag must be assigned to the synchronization signal, for example, of the utilities company. Can only be edited when the external pulse is enabled.

See also

Defining archiving periods (Page 57)

4.3 Setting the archiving on a S7-CPU (SIMATIC Memory Card)

The prepared periodic energy values with time stamp are cached in the data blocks for buffering before they are archived on the S7-1500 CPU (on an inserted SIMATIC memory card).

The number of data blocks for buffering corresponds to the number of acquisition object tables.

Then the energy values in are stored in data logs (CSV files) on the S7-1500 CPU (SIMATIC memory card). One data record is written to the data log per archiving period. A data record contains an energy value with time stamp and status.

You can find general information on data logs in the online help of the TIA Portal information system under "Data Logging - Overview".

You define the number and size of the data log files for archiving on the memory card.

Requirement

- The prepared periodic energy values with time stamp (power and energy consumption, energy counter value) are enabled for archiving.

  You can find additional information on this in the section "Setting energy values for periodic archiving (Page 51)".

Procedure

To make the required settings for archiving on the S7-1500 CPU, follow these steps:

1. Open the "Energy objects" folder in the project tree.
2. Double-click on the "Energy program settings" object.

   The dialog with the settings for the energy program opens in the working area.
3. Select the entry "Archiving and buffering" in the area tree.
4. In the "Archiving" area, select the option button "PLC (SIMATIC memory card)".
   - The parameters for the data log are displayed below the option button.
   - The number and size of the data blocks for buffering are shown in the "Buffering" area.
5. In the "Archiving" area, make the settings for the data logs (data archives in CSV format) for the transfer to the memory card:
   - Name of the data log
   - Number of data logs
   - Size of the data log
6. In the "Buffering" area, check the parameters displayed for the size and the memory area of the data blocks.

The meaning of the settings is described in detail in the section "Archiving and buffering (S7-CPU) (Page 62)".

4.4 Archiving and buffering (S7-CPU)

Archiving

The prepared periodic energy values with time stamp are archived in data logs (CSV files) on the S7-1500 CPU (SIMATIC memory card). You can find general information on data logs and the structure of CSV files in the online help of the TIA Portal information system under "Data Logging - Overview".

You define the number and size of the data log files for archiving on the SIMATIC memory card.

The following table shows the settings in the area "Archiving" for the "PLC (SIMATIC Memory Card)" archiving type:

Setting	Description
Name of the data log	The name of the data log is used for file name of the CSV file (comma separated values). The file name consists of the name (as prefix) and the time stamp of the first energy value in the data log. The following restrictions apply to the name of the data log with the S7-1500 CPUs: • Permissible name length: 1 - 26 characters • The following characters are allowed: 0 ... 9, a ... z, A ... Z, "_", "-" You can find additional information about naming conventions in the section "Performance features and conventions (Page 21)".
Number of data logs	The number of data logs is limited by the capacity of the SIMATIC memory card. If the selected number of data logs is reached, the oldest log data is deleted and a new data log created. Valid number of data logs: 2 - 10 Set to 5 by default.
Size of the data log	If a data log approaches the specified size, a new data log is created. The maximum size of the data log is limited by the system to 1024 MB. The required space on the SIMATIC memory card for a data log is calculated using the following formula: 45 bytes + (number of data records * 116 bytes) A data record contains an energy value with time stamp and status. Recommendation: Set the value for the "Size of data log" setting no larger than 180 MB in order to avoid data loss if the CSV file is re-used, for example, with "Microsoft Excel". Set to 10 MB by default.

Buffering

The periodic energy values are cached along with their time stamps in the data blocks for buffering before they are archived on the S7-1500 CPU (SIMATIC memory card). The caching avoids loss of data - for example in the event that the SIMATIC memory card is full because the configured number of data logs has been reached.

The following table shows the settings in the area "Buffering" for the "PLC (SIMATIC Memory Card)" archiving type:

Setting	Description
Number of data blocks	The number of data blocks corresponds to the number of created acquisition object tables. One data block for buffering is required for every acquisition object table. The data blocks are automatically created with the generation of the energy program.
Size of the data blocks	By using larger data blocks, you have the option to extend the buffer period of the energy values on the CPU, for example. Set to 10 KB by default.
Allocated memory	Product of number multiplied by the size of the data blocks

See also

Example for archiving (S7 CPU) (Page 63)

Setting the archiving on a S7-CPU (SIMATIC Memory Card) (Page 61)

4.5 Example for archiving (S7 CPU)

The required space on the SIMATIC memory card for a data log is calculated using the following formula:

45 bytes + (number of data records * 116 bytes).

The maximum size of the data log is limited by the system to 1GB. In this way, you can archive 9,256,395 (approximated as 9,200,000 or 9,000,000) data records of an acquisition object in which archiving of the power consumption, energy consumption and energy counter value is enabled to a data log.

- When number of data records is approximated as 9,200,000:

  This corresponds to an archiving over 31940 days (87 years) for an acquisition object, or 159 days for 200 acquisition objects with the same configuration.

- When number of data records is approximated as 9,000,000:

  This corresponds to an archiving over 31250 days (85 years) for an acquisition object, or 157 days for 200 acquisition objects with the same configuration.

4.6 Setting the archiving on a PC station with WinCC Professional (Data Log)

The prepared periodic energy values with time stamp are cached in the data blocks for buffering before they are archived on the WinCC Professional SCADA system Then the energy values are transferred to the data log on the WinCC Professional SCADA system. This type of buffered communication enables secure archiving and thus a significant increase in the quality and consistency of invoice-related energy data.

The number of data blocks for buffering corresponds to the number of acquisition object tables.

Note

WinCC Professional (data log)

You select a corresponding check box in the Energy Suite to archive the buffered energy values in data logs of WinCC Professional.

The data logs of WinCC Professional are set up in the settings of WinCC Professional.

Requirement

- The desired periodic energy values (power and energy consumption, energy counter value) are enabled for archiving.

  You can find additional information on this in the section "Setting energy values for periodic archiving (Page 51)".

Procedure

To make the required settings for archiving to the data log of WinCC Professional on the PC station, follow these steps:

1. Open the "Energy objects" folder in the project tree.
2. Double-click on the "Energy program settings" object.

   The dialog with the settings for the energy program opens in the working area.
3. Select the entry "Archiving and buffering" in the area tree.

4. In the "Archiving" area, select the option button "WinCC Professional (data log)".
   - Below the option button, a notice appears telling you that the setting of the data log for this archiving type must be made in WinCC Professional.

     You can find additional information on this in the section "Create archiving structure for energy values (Page 104)".
   - You can use the "Advanced communication settings (between PLC and WinCC)" check box to make additional optional settings for checking the data transmission and the connection between the PLC and WinCC Professional.
   - The number and size of the data blocks for buffering are shown in the "Buffering" area.

     The "Number of data blocks" output field indicates the number of data blocks. This number corresponds to the number of acquisition object tables created and cannot be changed.
5. In the "Buffering" area, specify the size of the data blocks for buffering.

   The "Occupied memory" output field shows the product of the defined number multiplied by the size of the data blocks.

The meaning of the settings is described in detail in the section "Archiving and buffering (WinCC Professional) (Page 66)".

4.7 Archiving and buffering (WinCC Professional)

Archiving

The prepared periodic energy values with time stamp are archived in data logs on the WinCC Professional SCADA system.

Note

WinCC Professional (data log)

The data logs of WinCC Professional are configured in the settings of WinCC Professional.

You can find additional information on this in the section "Create archiving structure for energy values (Page 104)".

The following table shows the advanced communication settings (between PLC and WinCC) for the selected archiving type "WinCC Professional (Data Log)":

⚠ CAUTION
Advanced communication settings You do not need to change the advanced communication settings configured by default. If you have any questions about archiving, contact Service & Support.

Setting	Description
Advanced communication settings (between PLC and WinCC)	Can only be activated for the archiving type "WinCC Professional (data log)" When the check box is selected, the settings under the following areas can be configured: • Monitoring of connection • Handshake for data transfer Deactivated by default.
Monitoring of connection	
Monitoring time of connection	Monitoring time of connection for watchdog The connection between the CPU and WinCC Professional is monitored by the watchdog counter as follows: • When the connection is established, the Energy Suite component in WinCC Professional acknowledges the request for comparison of the watchdog counter. • If no acknowledgment is made within the monitoring time for the watchdog, the connection is interrupted and an error message is generated. The following duration can be selected for the monitoring time of connection: • 1 s • 2 s • 5 s • 10 s • 20 s 5 s are set by default.

Setting	Description
Handshake for data transfer	
Monitoring time	Monitoring time for writing the energy data to the data log Handshake for data transfer takes place under the following conditions: • The Energy Suite component acknowledges the request for writing the energy data to the data log of WinCC Professional within the monitoring time. • No monitoring time error has occurred for the watchdog. The following duration can be selected for the monitoring time: • 10 s • 20 s • 30 s • 60 s • 120 s • 180 s • 240 s • 300 s • 600 s • 900 s The default setting is 30 s.
Wait time	Wait time for repeating the request to write the energy data to the data log The request is repeated until the following conditions are met: • Wait time has expired. • Energy Suite component acknowledges the request. The following duration can be selected for the wait time: • 10 s • 20 s • 30 s • 60 s • 90 s • 120 s 60 s is set by default.

Note

Sufficient watchdog time

Adapt the watchdog time to the number of acquisition objects. The more acquisition objects are configured, the longer the watchdog time needs to be.

Buffering

The periodic energy values are cached along with the associated time stamp in the data blocks (DBs) for buffering before they are archived in the data log of WinCC Professional. Caching avoids loss of data - for example, in the event that the connection to WinCC Professional is interrupted.

You specify the size of the data blocks (buffer DBs) for the duration of the buffering of the periodic energy values. The number of archived energy values and the configured archiving period are relevant for the maximum duration of buffering.

The following table shows the settings in the area "Buffering" for the "WinCC Professional (Data Log)" archiving type:

Setting	Description
Number of data blocks	The number of data blocks corresponds to the number of created acquisition object tables. One data block for buffering is required for every acquisition object table. The data blocks are automatically created with the generation of the energy program.
Size of the data blocks	By using larger data blocks, you have the option to extend the buffer period of the energy values on the CPU, for example, in the event of failure of the communication to the WinCC Professional SCADA system. Set to 10 KB by default.
Allocated memory	Product of number multiplied by the size of the data blocks

See also

Examples of archiving and buffering (WinCC Professional) (Page 69)

Setting the archiving on a PC station with WinCC Professional (Data Log) (Page 64)

4.8 Examples of archiving and buffering (WinCC Professional)

Examples for buffering

The following examples show the relationship between the number of acquisition object tables and the duration of the buffering, depending on the CPU. The examples show the calculation of one or two acquisition object tables.

- The duration of the buffering depends on the number of acquisition object tables, because exactly one data block for buffering is created for each acquisition object table.
- The assignment of individual acquisition objects to the acquisition object table also has an effect on the maximum buffer duration.

The following table shows the maximum size of the data block for buffering and the default values for the duration of the buffering for a data record (e.g. power consumption) with a 15 min. archiving period in various S7-1500 CPUs: The size of an archive value including the time stamp is 150 bytes.

CPU	Maximum size of the DB [MB]	Duration of buffering [d]
CPU 1511	1	72
CPU 1516	5	375
CPU 1518	10	750
CPU 1510SP	0.75	52
CPU 1512SP	1	72

Example with one acquisition object table

The duration of the buffering is calculated based on the following constraints:

- CPU used: CPU 1518
- Maximum size of the data block for buffering: 10 MB
- Number of acquisition object tables: 1
- Number of acquisition objects: 50
- Energy data to archive per acquisition object:
  - Power consumption
  - Energy consumption
- Duration of the archiving period: 15 min
- Duration of buffering: 7 1/2 days

The duration of the buffering is calculated as follows:

750 days / 2 energy data items / 50 acquisition objects = 7 1/2 days

Example with two acquisition object tables

The duration of the buffering is calculated based on the following constraints:

- CPU used: CPU 1518
- Maximum size of the data block for buffering: 10 MB
- Number of acquisition object tables: 2
  - Per acquisition object table: 25 acquisition objects
- Number of acquisition objects: 50
- Energy data to archive per acquisition object:
  - Power consumption
  - Energy consumption
- Duration of the archiving period: 15 min
- Duration of buffering: 15 days

The duration of the buffering is calculated as follows:

1500 days / 2 energy data items / 50 acquisition objects = 15 days

The duration of the buffering directly depends on the number of acquisition object tables, because exactly one data block for buffering is created for each acquisition object table.

Generate energy program

5

5.1 Making general settings for the energy program

Once the acquisition objects have been configured and settings for buffering and archiving have been made, define the following general properties for the energy program before the generation if required:

- Enable for alarm suppression
- Startup time of the Energy Suite blocks

Procedure

To open the dialog for general settings of the energy program, follow these steps:

1. Open the "Energy objects" folder in the project tree.
2. Double-click on the "Energy program settings" object.
   The "General" dialog with the settings for the energy program opens in the working area.
3. Make the desired settings in the "General" dialog. The meaning of the parameters is described in detail in the section "General settings (Page 72)".

See also

Defining archiving periods (Page 57)

Setting the archiving on a S7-CPU (SIMATIC Memory Card) (Page 61)

Setting the archiving on a PC station with WinCC Professional (Data Log) (Page 64)

5.2 General settings

The following table shows the settings of the energy program under "General":

Setting	Description
Alarm suppression	Selection of the tag (data type "BOOL") for higher-level alarm suppression for the energy program. This allows block alarms to be suppressed, for example, at restart of the CPU after a voltage failure.
Startup time	Duration for which the Energy Suite blocks remain disabled after restarting the CPU. 10000 ms is set by default. Example: The startup time is used to prevent field devices that are still starting up from causing errors or the reporting of errors due to the startup. When the initialization of the field devices is complete (startup finished), the field devices are ready for operation. The setting of the startup time depends on the number of devices connected to the CPU. The more devices on the PROFINET line there are, the longer the startup time must be set.

See also

Making general settings for the energy program (Page 71)

Archiving periods (Page 59)

Archiving and buffering (S7-CPU) (Page 62)

Archiving and buffering (WinCC Professional) (Page 66)

5.3 Runtime licenses for Energy Suite

Available runtime licenses

Energy Suite requires Runtime licenses on the CPU based on the number of configured energy objects.

The following runtime licenses can be set for the Energy Suite:

- "5 Energy objects" license type
- "10 Energy objects" license type

The available runtime licenses for the Energy Suite are displayed for the CPU configuration in the "Properties" Inspector window under:

Runtime licenses > Energy Suite > Runtime licenses > Number of purchased licenses

---

Note

Runtime licenses

Before generating the energy program, ensure that sufficient runtime licenses are available on your engineering system. Disabled energy objects are not included in a runtime license.

Lacking or insufficient runtime licenses result in the termination of the program generation.

Example

The following figure shows the configuration of runtime licenses for the following example:

If you use 32 energy objects in the energy program, you need:

- 1 * "5 energy objects" license type and 3 * "10 energy objects" license type

or

- 7 * "5 energy objects" license type

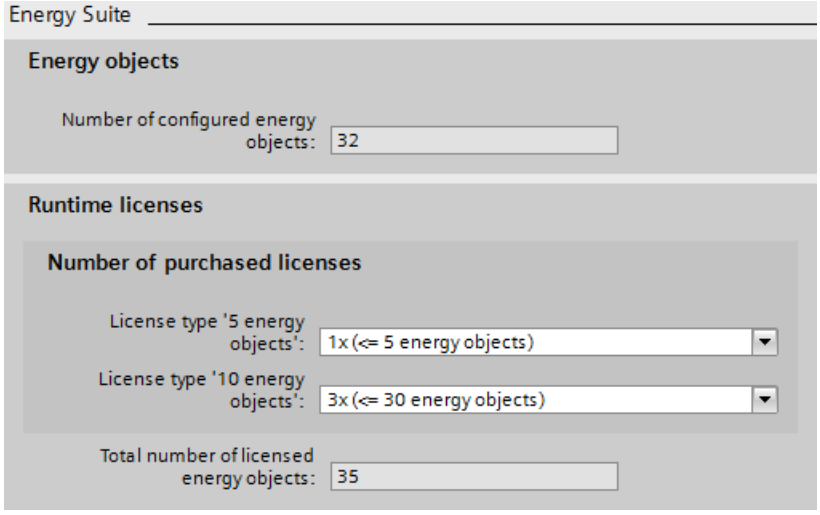

Required runtime licenses

Number of configured acquisition objects calculates from

- number of configured acquisition objects
- number of configured actors for load management

To display the configured objects for acquisition and load management, follow these steps:

1. Open the "Energy objects" folder in the project tree.
2. Double-click on the "Energy program settings" object.

   The dialog with the settings for the energy program opens in the working area.
3. Select the entry "Energy Suite runtime licenses" in the area tree.

The configured acquisition objects and actor objects are displayed. Each actor object's license is equivalent to three acquisition object licenses. The total number determines the required Energy Suite runtime licenses.

Note

Ensure that the Number of purchased licenses must always be equal to or lesser than the total number of required acquisitions object licenses mentioned in Available runtime licenses.

5.4 Generate energy program

Once the acquisition objects have been fully configured and settings for the energy program have been made, you generate the energy program based on these guidelines.

Requirement

- All acquisition objects that should be included are enabled for the energy program.
- The acquisition objects enabled for the energy program are fully configured.
- The settings for the energy program are defined.
- The number of required runtime licenses for Energy Suite is sufficient.
  You can find additional information on this in the section "Runtime licenses for Energy Suite (Page 73)".
- The name structures in the SCADA system do not exceed the maximum permissible length for the CPU name of 85 characters.

Procedure

To generate the energy program, follow these steps:

1. Open the S7-1500 CPU in the project tree.
2. Click on the "Energy objects" object below the S7-1500 CPU and select the command "Generate energy program" from the shortcut menu.

   Alternatively, you can open this dialog in the "Energy program settings" dialog by clicking the "Generate energy program" icon.

   The dialog with the selection for generating the energy program opens.
3. Select the option button "Energy·acquisition·program". Ensure when you click "Energy acquisition program", acquisition objects must be configured. In case of no acquisition objects configured, an error message is displayed.

   For generating an energy program for load management see section "Generate energy program (Page 139)". If complete energy generation (including energy acquisition and load management) is selected, and no load management are configured, then an error is displayed.
4. Click on the "Generate" button. For complete energy generation (including energy acquisition and load management), ensure to configure minimal infeed, and actors for load management.

   The generator checks the completeness and the plausibility of the configuration of the acquisition objects and starts the generation of the energy program. Information and events during the generation of the energy program are displayed in the Inspector window under "Info > Energy Suite". A progress bar indicates the status of generation.
5. You can use the "Go to" function to jump to the position in the configuration that is relevant for the respective event.
6. Adapt the configuration if necessary and start the generation of the energy program again.

Result

After error-free and full configuration of acquisition objects, instances of the required blocks are created from the Energy Suite Library and the measurement hardware library in the "Program blocks" folder below the S7-1500 CPU. In addition, other required components, such as organization blocks and data blocks, are added to the "Program blocks" folder and the required interconnections are made.

Instances of data types from the Energy Suite Library and the measurement hardware library can be created in the "PLC data types" folder below the S7-1500 CPU.

The energy program is generated for all enabled acquisition objects (regardless of the division in the acquisition object tables).

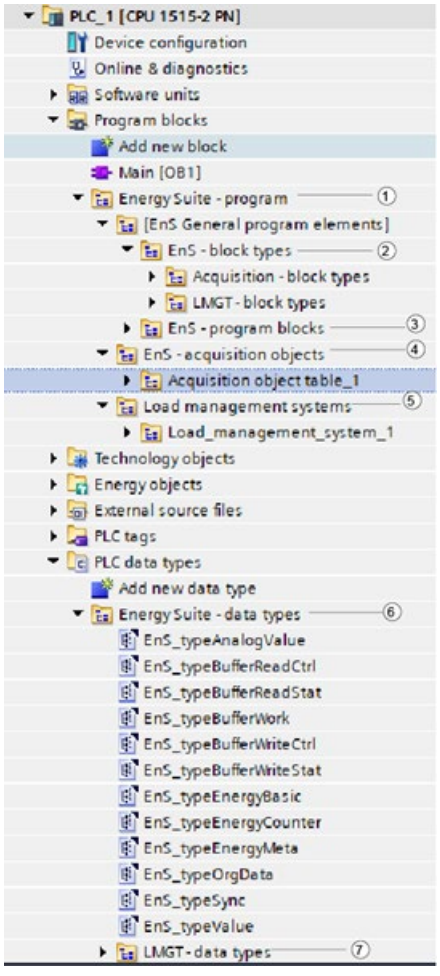

	Object	Description
①	Energy Suite - program	New folder for energy program
②	EnS - block types (Page 79)	Subfolder "Acquisition - block types" with the Energy Suite blocks and measurement hardware driver blocks (function blocks)
③	EnS - program blocks (Page 81)	Folder for additional blocks (organization blocks, functions, DBs, etc.)
④	EnS - acquisition objects (Page 84)	Blocks for acquisition objects (data blocks)
⑤	Energy Suite - data types (Page 85)	Folder with the Energy Suite data types and measurement hardware data types

Delta generation scenario

- Add: In case of delta generation, when you add a new acquisition object in the "Acquisition object table", and generate energy program, the new blocks generated will append to the existing blocks under the folder "Energy Suite - program". The related function calls will get updated.
  - During PLC runtime, only the newly added blocks will be archived along with timestamp without restarting the PLC.
- Modifiy: In case of delta generation, when you edit an acquisition object in the "Acquisition object table", and generate energy program, the edited blocks will get generated and will append to the existing blocks under the folder "Energy Suite - program". The modified parameters of an acquisition object are updated in the runtime under "Start value" column only for an instance DB. To reflect the changes from "Start value" column to "Monitor value" column in runtime, you must click " Load start values as actual values". The related function calls will get updated.
  - In PLC runtime, only the edited EnOs will be re initiated and the existing acquisition objects should not be impacted and the current energy period will remain valid.
  - In SCADA runtime: All the instances of existing EnOs should not be impacted.
- Delete: In case of delta generation, when you delete an acquisition object in the "Acquisition object table", and generate energy program, the selected blocks only will be deleted and will not affect the existing blocks under the folder "Energy Suite - program". The related function calls will get updated.
  - During PLC runtime, excluding the deleted blocks, rest will be archived along with timestamp without restarting the PLC.

See also

Change the enable for acquisition objects for the energy program (Page 43)

Making general settings for the energy program (Page 71)

Important information on energy data (Page 24)

5.5 Structure of the energy program

5.5.1 Structure of the energy program

When the energy program is generated, the following folders are automatically created below the S7-1500 CPU:

- "Energy Suite - program" folder under "Program blocks" with subfolders
  - [EnS general program elements]
    - EnS - block types (Page 79)
    - EnS - program blocks (Page 81)
  - EnS - acquisition objects (Page 84)
- Folder "Energy Suite - data types (Page 85)" under "PLC data types"

Note

Blocks of the energy program

SIMATIC Energy Suite automatically generates for you all the required blocks and data types and their interconnection based on the configured acquisition objects and the energy program settings.

You do not need to further adapt these blocks for the standard application with Energy Suite.

CAUTION

Manual change to blocks of the energy program

If you make manual changes to the blocks after generating the energy program, you yourself are responsible for the error-free operation of the devices and the energy program.

CAUTION

Using Energy Suite blocks in other PLC programs

If you use the Energy Suite blocks from the global library in other PLC programs, you yourself are responsible for error-free use of Energy Suite blocks.

See also

Acquisition objects and energy acquisition program (Page 33)

5.5.2 EnS - block types

The structure of your energy program depends on the following configurations:

- Energy data sources (Page 23)
- Enabled acquisition objects (Page 40)
- Energy program settings (Page 71)

The following shows how the Energy Suite blocks generally work in the energy program for energy data from the process image of the CPU (PLC tags) or from data blocks (DB tags).

When the input measurement data is received from the connected measurement hardware, the hardware-specific function blocks (FBs) are added with driver functionality. You can find additional information on this in the section "Structure of the energy program for measurement hardware (Page 86)".

How Energy Suite blocks work

The placeholder "xxx" in the picture means that there are different types of this block, for example, for "EnS_Drvxxx":

- EnS_DrvPulse
- EnS_DrvCounterLInt

You can find more types in the "EnS - block types" table after the picture.

The following picture show how the Energy Suite blocks work:

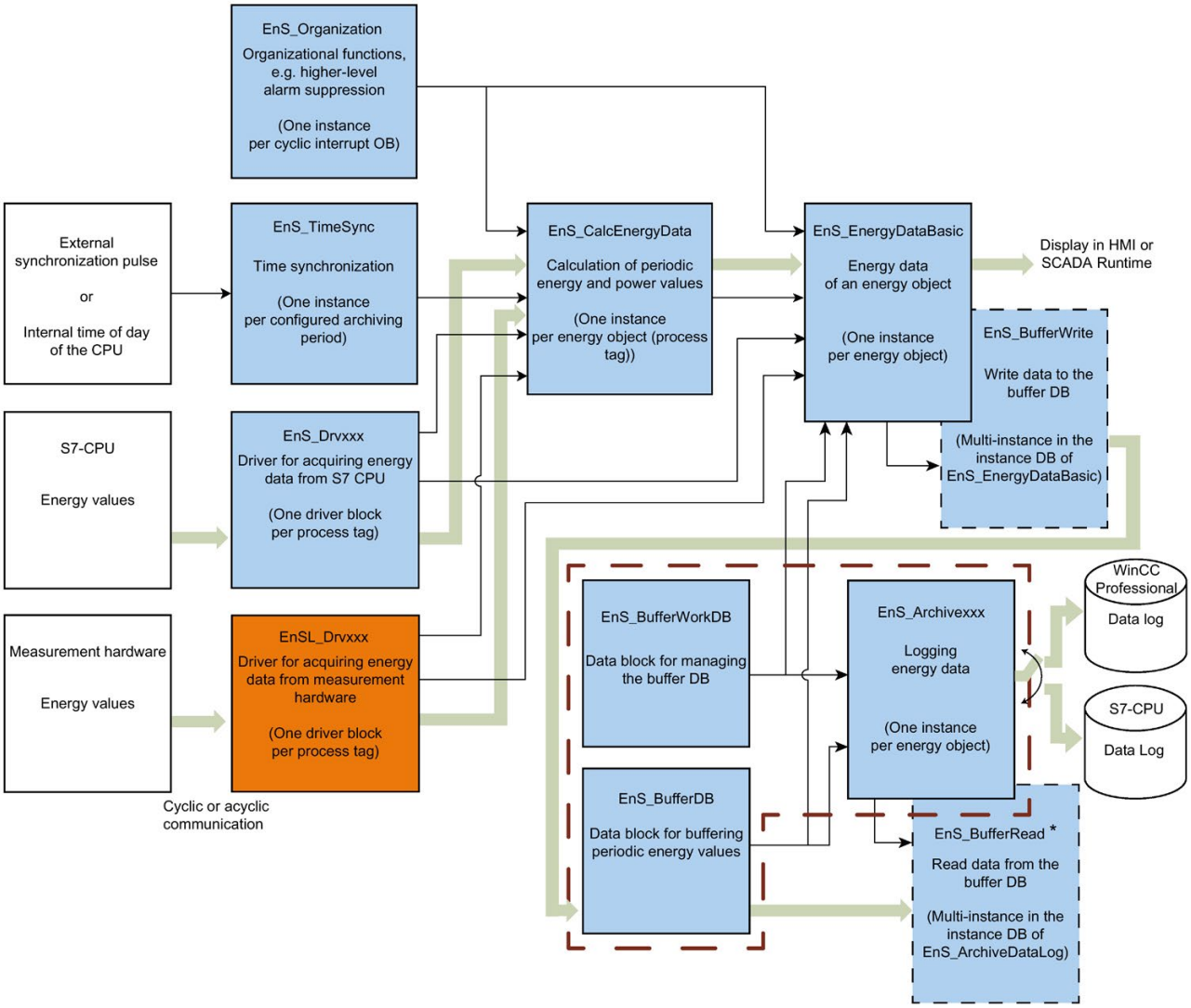

* EnS_BufferRead is not called for archiving in WinCC Professional

Energy data flow

Parameter assignment data

Blocks used internally

Blocks associated with an acquisition object table

EnS - block types

The "Acquisition - block types" subfolder contains the instances of all function blocks from the Energy Suite library once the energy acquisition program is generated. When the measurement hardware acts as the energy data source, this subfolder also contains a further subfolder "EnSL - block types" with the instances of the associated Driver block from the measurement hardware library (Page 86).

Function block	Description	Example in STEP 7 (TIA Portal)
EnS_ArchiveDataLog (Page 156)	Archived energy data in data logs (CSV file on the SIMATIC memory card of the CPU)	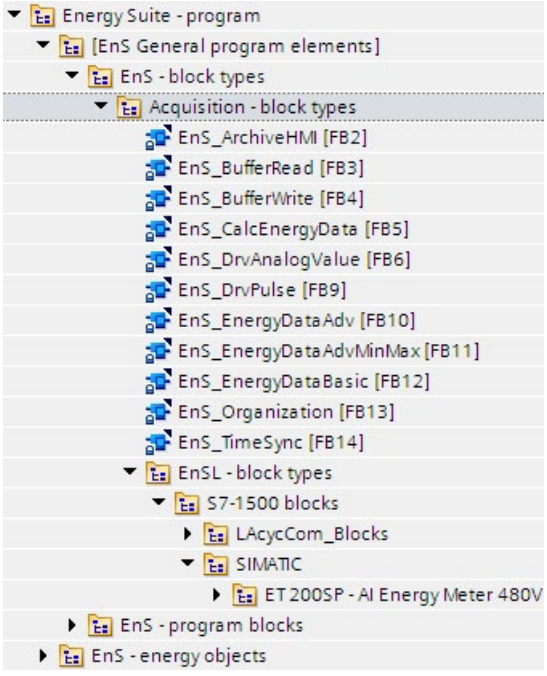
EnS_ArchiveHMI (Page 166)	Archived energy data in data logs of WinCC Professional	
EnS_BufferRead (Page 174)	Reads the data from the buffer DB (EnS_BufferDB (Page 206)). Used internally	
EnS_BufferWrite (Page 176)	Writes data to the buffer DB (EnS_BufferDB (Page 206)). Used internally	
EnS_CalcEnergyData (Page 179)	Periodically calculates the energy used and average power consumption	
EnS_DrvAnalogValue (Page 185)	Driver block for analog input (e.g. power value, flow value)	
EnS_DrvCounterLInt (Page 187)	Driver block for counter values of the LINT type	
EnS_DrvCounterLReal (Page 189)	Driver block for counter values of the LReal type	
EnS_DrvPulse (Page 191)	Driver block for a pulse input	
EnS_EnergyDataAdv (Page 193)	Advanced energy data from a device (for example, phase-specific current and voltage values)	
EnS_EnergyData-AdvMinMax (Page 194)	Minimum and maximum values of the advanced energy data of a device	
EnS_EnergyDataBasic (Page 195)	Basic energy data from a device (for example, power, energy counter value)	
EnS_Organization (Page 199)	Contains general data and parameters for central program organization	
EnS_TimeSync (Page 200)	Synchronizes the times for calculating the energy data	

5.5.3 EnS - program blocks

The "EnS - program blocks" folder contains additional blocks, such as organization blocks, data blocks and functions (FCs) required for the energy program, once the program is generated.

EnS - program blocks

The "EnS - program blocks" folder contains the following blocks once the program is generated:

Block	Description	Example in STEP 7 (TIA Portal)
Organization block		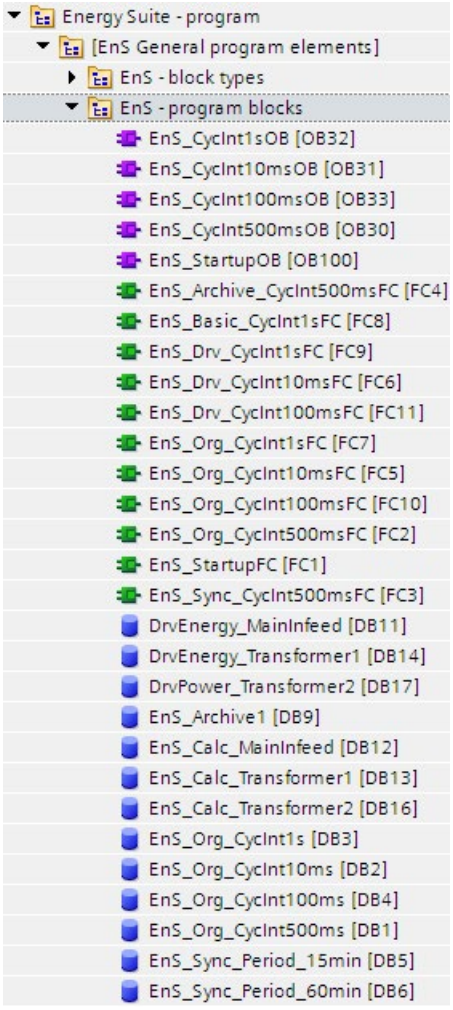
EnS_CycInt<NNNcc>OB	Three cyclic interrupt OBs with different timings. "NNN" and "cc" are placeholders for the clock and the unit. Example: For three clock speeds of 100 ms, 1000 ms and 10000 ms, the following cyclic interrupt OBs are created: • "EnS_CycInt100msOB" • "EnS_CycInt1sOB" • "EnS_CycInt10sOB"	
EnS_StartupOB	Startup OB 100	
Function		
EnS_Archive_CycInt <NNNcc>	An FC for archiving energy data in the cyclic interrupt OB. "NNN" and "cc" are place holders for the duration and unit. Example: With a cycle time of 500 ms, the "EnS_Archive_CycInt500ms" FC is created.	
EnS_Basic_CycInt<NNNcc>	An FC for the basic energy data of acquisition objects in the cyclic interrupt OB. "NNN" and "cc" are place holders for the duration and unit. Example: With a cycle time of 1s, "EnS_Basic_CycInt1s" is created.	
EnS_Drv_CycInt<NNNcc>	An FC for the driver blocks of acquisition objects in the cyclic interrupt OB. "NNN" and "cc" are place holders for the duration and unit. Example: With a cycle time of 100 ms, "EnS_Drv_CycInt100ms" is created.	
EnS_Org_CycInt<NNNcc> FC	Three FCs for the central organization of the energy program that are called in the cyclic interrupt OB and startup OB. "NNN" and "cc" are place holders for the cycle duration and unit. Example: For three cycle times of 1 s, 100 ms and 10 s, the following FCs are created: • "EnS_Org_CycInt1sFC" • "EnS_ Org_CycInt100msFC" • "EnS_ Org_CycInt10sFC"	
EnS_StartupFC	FC called in the startup OB.	
EnS_Sync_CycInt<NNNcc>	An FC for the time synchronization. "NNN" and "cc" are place holders for the duration and unit. Example: With a cycle time of 500 ms, the "EnS_Sync_CycInt500ms" FC is created.	

Block	Description	Example in STEP 7 (TIA Portal)
Data block		
EnS_Archive<N>	Instance DB of FB "EnS_ArchiveDataLog". "N" is a placeholder for the number of the buffer. Example: For buffer number "1", the "EnS_Archive1" instance DB is created.	
DrvPulse_<name of the acquisition object>	Instance DB of the FB "EnS_DrvPulse" Example: The instance DB "DrvPulse_Transformer1" is created by an acquisition object with the name "Transformer1".	
EnS_Calc_<name of the acquisition object>	Instance DB of FB "EnS_CalcEnergyData" Example: The instance DB "EnS_Calc_Transformer1" is created by an acquisition object with the name "Transformer1".	
EnS_Org_CycInt<NNNcc>	Instance DB of FB "EnS_Organization". "NNN" and "cc" are place holders for the cycle duration and unit. Example: With a cycle time of 10 ms, an "EnS_Org_CycInt10ms" instance DB is created.	
EnS_Sync_Period_<NNNcc>	Instance DB of FB "EnS_TimeSync". "NNN" and "cc" are placeholders for the synchronization period and the unit. Example: For a synchronization period of 15 minutes, the "EnS_Time15m" instance DB is created.	

See also

EnS_BufferDB (Page 206)

EnS_BufferWorkDB (Page 207)

5.5.4 EnS - acquisition objects

Once the program is generated, the "EnS - acquisition objects" folder contains a subfolder with the name of the acquisition object table "<name of the acquisition object table>" for each acquisition object table with acquisition objects.

The "<name of the acquisition object table>" folder contains the instance data blocks

- On the function blocks that are required for the acquisition objects in the energy program
- With the periodic energy values of the acquisition objects, which are provided for buffering and archiving

The data blocks for buffering the energy data are also created as instances from the Energy Suite library in this folder.

<Name of the acquisition object table>

Depending on the configuration of the acquisition objects, the "<name of the acquisition object table>" folder may contain the following data blocks:

Data block	Description	Example in STEP 7 (TIA Portal)
<Name of the acquisition object>	Data block with information for the measuring point and the energy values that are provided for archiving	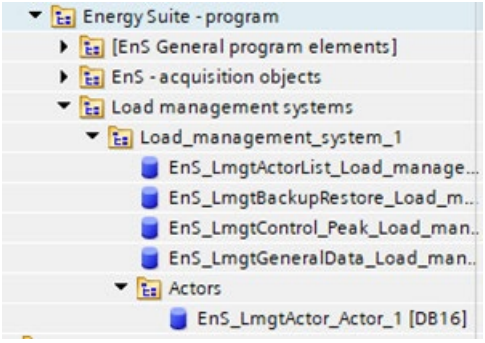
EnS_Buffer<Unique id of acquisition object table> (Page 206)	Data block for buffering energy data records. Example: The "EnS_BufferXXXXX" buffer DB is created by an acquisition object table with the unique ID XXXXX of acquisition object table.	
EnS_BufferWork<Unique id of acquisition object table> (Page 207)	Data block for control and status information of the buffer. Example: The "EnS_BufferWorkXXXXX" buffer DB is created by an acquisition object table with the unique ID XXXXX of acquisition object table.	

5.5.5 Energy Suite - data types

The Energy Suite library contains the information required data types for the energy program.

Energy Suite - data types

The "Energy Suite - data types" folder contains the instances of the following data types blocks from the Energy Suite library once the program is generated:

Data type	Description	Example in STEP 7 (TIA Portal)
EnS_typeAnalogValue (Page 208)	Data type for analog process values	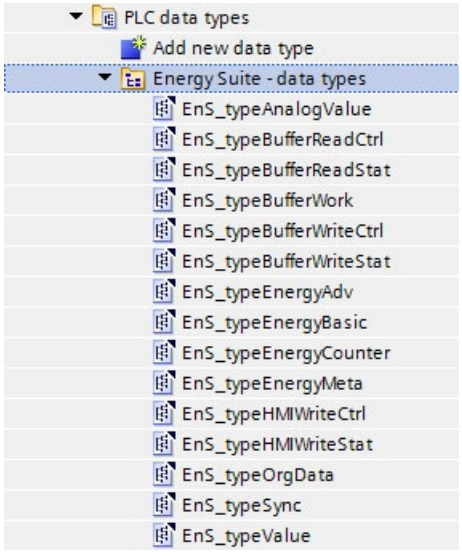
EnS_typeBufferReadCtrl (Page 208)	Data type for control information of the buffer for reading data	
EnS_typeBufferReadStat (Page 209)	Data type for data and status information of the buffer for reading data	
EnS_typeBufferWork (Page 210)	Data type for control and status information of the buffer	
EnS_typeBufferWriteCtrl (Page 211)	Data type for control information of the buffer for writing data	
EnS_typeBufferWriteStat (Page 211)	Data type for status information of the buffer for writing data	
EnS_typeEnergyAdv (Page 212)	Data type for advanced energy data	
EnS_typeEnergyBasic (Page 214)	Data type for basic energy data	
EnS_typeEnergyCounter (Page 215)	Data type for energy counter value	
EnS_typeEnergyMeta (Page 216)	Data type for metadata of the measuring point (information for configuration of the acquisition object)	
EnS_typeHMIWriteCtrl (Page 219)	Data type for control information of the buffer for writing energy data to the data log of WinCC Professional	
EnS_typeHMIWriteStat (Page 220)	Data type for status information of the buffer for writing energy data to the data log of WinCC Professional	
EnS_typeOrgData (Page 221)	Data type for organizational data	
EnS_typeSync (Page 221)	Data type for time synchronization	
EnS_typeValue (Page 222)	Data type for output values	

5.5.6 Driver blocks for measurement hardware

5.5.6.1 Structure of the energy program for measurement hardware

Driver blocks of the measurement hardware for STEP 7 (TIA Portal)

The energy data (input measurement data) of the measurement hardware are made available in different ways (e.g. differences in the data format or in the data record address). These differences make it difficult to access and further process the energy data from the measurement hardware in the PLC program.

For this, **in addition** to the Energy Suite blocks, hardware-specific function blocks (FBs) with driver functionality are available for the measurement hardware from the Energy Support Library (EnSL). This hardware-specific function blocks (referred to as driver blocks in the following), form the interface between the respective measurement hardware and your automation system.

The energy data from the measurement hardware is read and uniformly provided to the automation system using driver blocks. In this way, the raw energy data is provided easier and faster to your PLC program and Energy Suite. The components of the Energy Suite are then used to prepare and process raw energy data.

Interaction of Energy Suite blocks and driver blocks for measurement hardware

When the energy program is generated, instances of specific driver blocks for the measurement hardware are automatically created and interconnected (depending on the selected energy data sources) in the "EnS block types" folder of the energy program.

The following sections of this document describe the **basic interaction** of the Energy Suite blocks and the specific driver blocks for the measurement hardware in the energy program.

Documentation of the specific driver blocks for the measurement hardware

You can find a **detailed description** about how driver blocks operate and their block parameters in the documentation of the measurement hardware. The documentation for the measurement hardware is part of the Energy Support Library (EnSL).

5.5.6.2 Energy data processing based on the "IPO" principle

Energy data processing according to the "IPO" principle can be divided into "Input" "Processing" and "Output":

How function blocks work

The following figure shows the general operation of the driver blocks for the measurement hardware according to the "IPO" principle:

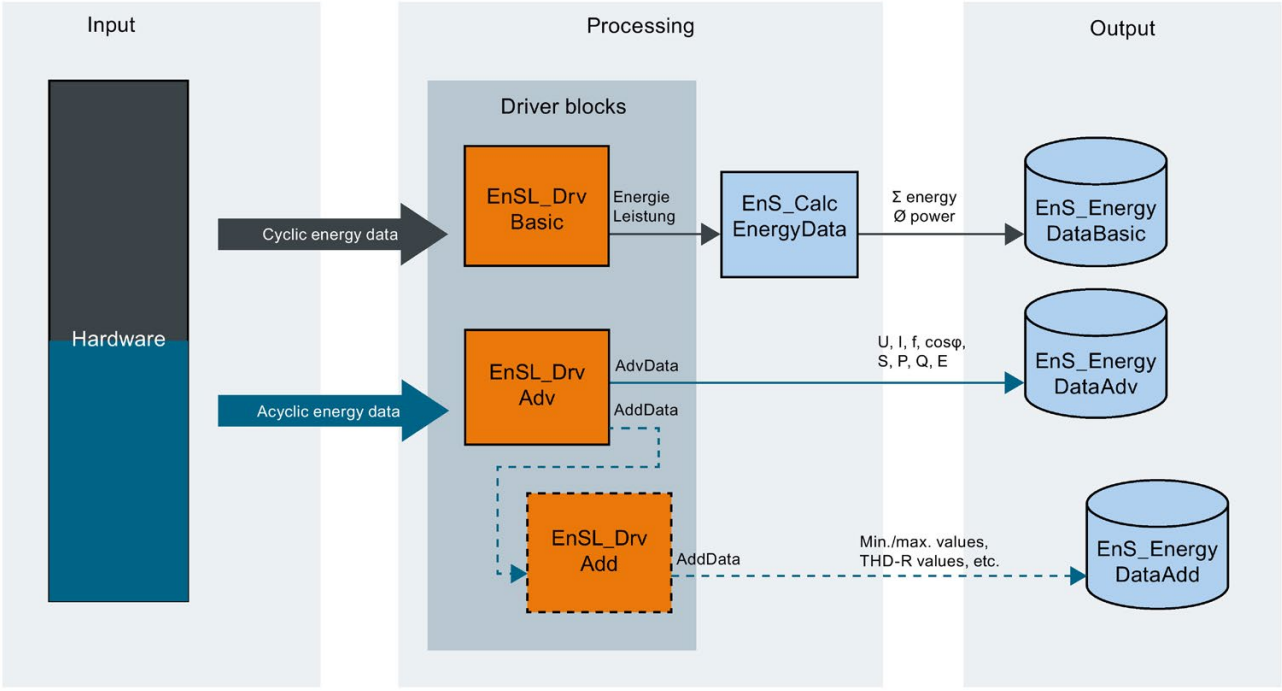

Energy data via cyclic communication (process image)

Energy data via acyclic communication (read data record)

Driver blocks for measurement hardware

Blocks of the SIMATIC Energy Suite

Required blocks

Optional blocks

The following table describes the different areas of the picture:

Area	Description
Input	Contains the measurement hardware (for example, measuring instrument) which provides the input measurement data for processing
Processing	Acquisition, calculation, time stamping and provision of energy values for other systems by the respective function blocks
Output	Provision of periodic energy values for different systems for visualizing, archiving or further evaluation (for example, SIMATIC Energy Manager PRO)

5.5.6.3 Area: Input

The measurement hardware is entered in the "Input" area. The driver blocks read the energy measurement data from the measurement hardware. This is done using cyclical communication (process image) and/or acyclic communication (read data record).

The following figure shows "input" according to the "IPO" principle:

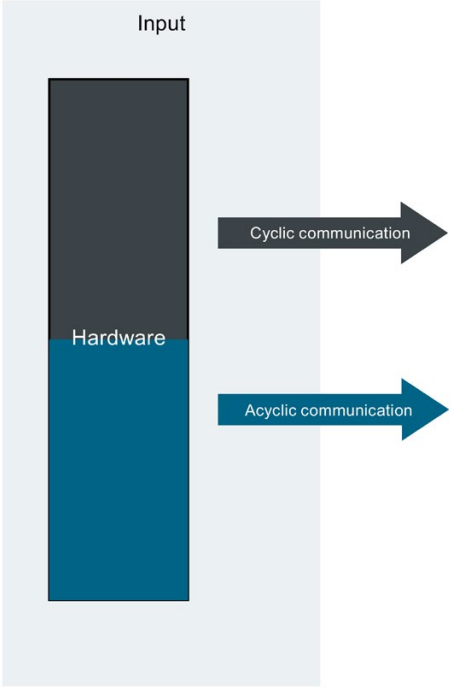

Energy data using cyclic communication (process image)

Energy data using acyclic communication (read data record)

You can find a detailed description of the measurement hardware in the documentation for the respective measuring instrument.

5.5.6.4 Area: Processing

In the "processing" area, the energy data from the respective driver blocks are acquired, normalized and prepared as raw energy data that can be easily further processed.

The "Basic", "Adv" and "Add" blocks are located in the "Driver blocks" area. The "EnSL_DrvBasic" driver block passes the current basic energy data to the Energy Suite function block "EnS_CalcEnergyData (Page 179)". The "EnS_CalcEnergyData" function block calculates the energy consumption and the average power over the individually configured archiving period (e.g. 15 min.).

You can find a detailed description of the driver blocks in the documentation for the respective measurement hardware.

The following figure shows an example of "processing" according to the "IPO" principle. The interconnection of the parameters may vary depending on the measurement hardware used.

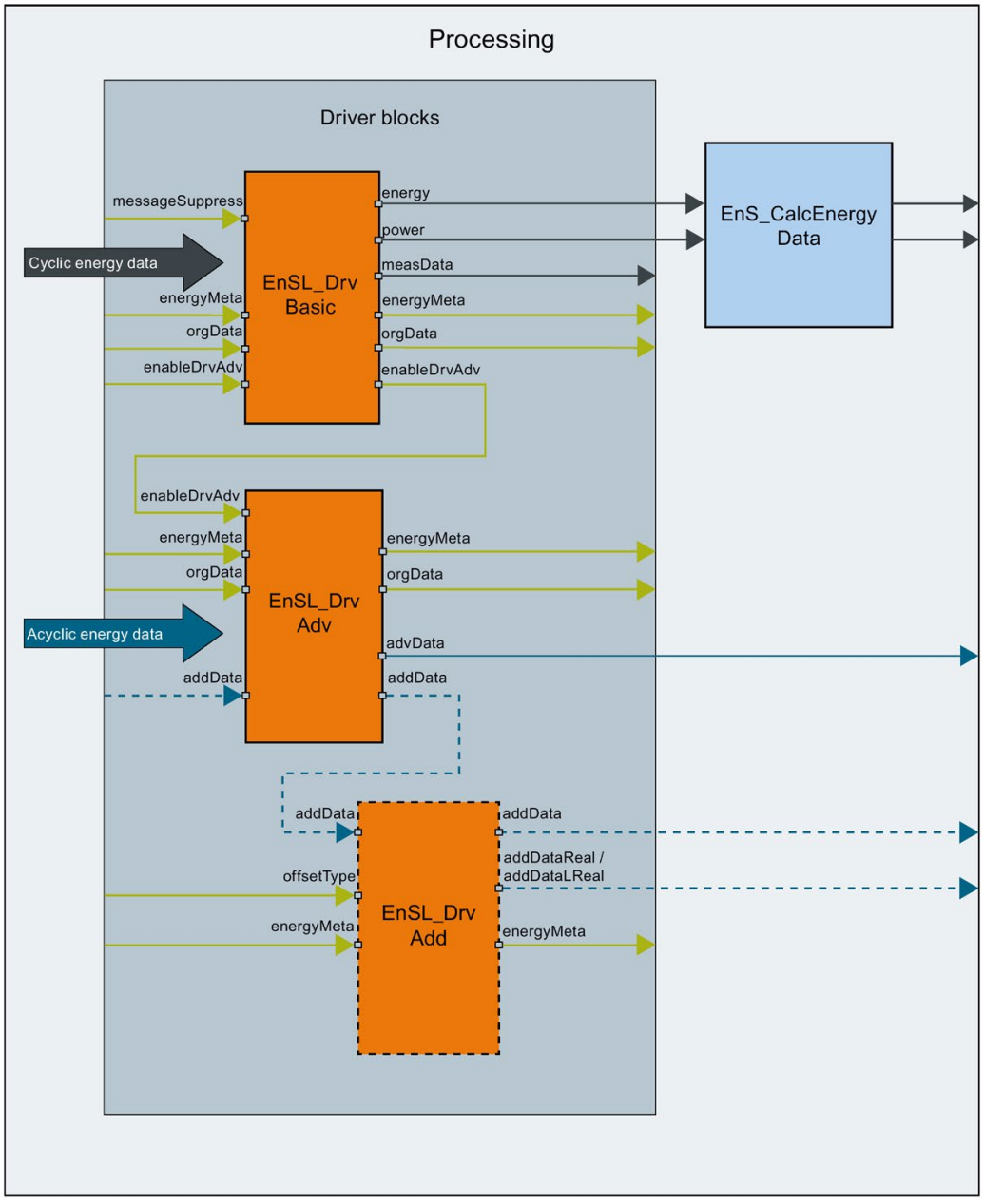

Cyclic energy data

Acyclic energy data

Driver blocks for measurement hardware

Blocks of the SIMATIC Energy Suite

Required blocks

Optional blocks

The following table describes the components of a picture:

Component	Description
EnSL_DrvBasic	Driver block for basic energy data Reads the basic energy data via cyclic communication from the measurement hardware, for example, energy counters, power
EnSL_DrvAdv	Driver block for advanced energy data Reads a data record with advanced energy data via acyclic communication from the measurement of hardware, for example, voltage, current
EnSL_DrvAdd	Driver block for additional energy data Reads a record with additional energy data via acyclic communication from the measurement hardware, for example, harmonics
EnS_CalcEnergyData	Energy Suite block for further processing (periodic calculation, time stamping, etc.) the energy data. You can find additional information on this in the section "EnS_CalcEnergyData (Page 179)".
Cyclic energy data	Predominantly basic energy data that are read by the "EnS_DrvBasic" driver block from the measurement hardware using cyclic communication (process image).
Acyclic energy data	Predominantly advanced and additional energy data that is read by the "EnSL_DrvAdv" and "EnSL_DrvAdd" driver blocks using acyclic communication (read data record).
messageSuppress	Alarm suppression
energyMeta	Process tag specific data You can find additional information on this in the section "EnS_typeEnergyMeta (Page 216)".
orgData	Organization data You can find additional information on this in the section "EnS_typeOrgData (Page 221)".
enableDrvAdv	Processing enable of the "EnSL_DrvAdv" driver block
energy	Current value of the active energy counter
power	Current value of the active power
measValues	Cyclic measurement data that is passed to the "EnSL_DrvAdv" driver block
advData	Extended measured data record
addData	Additional energy data
addDataLReal / addDataReal	Current LREAL/REAL data record

See also

Important information on energy data (Page 24)

5.5.6.5 Area: Output

After acquisition and processing, the energy data are collected in the "Output". The "Output" serves as an interface for visualization with SIMATIC WinCC or other systems (for example, SIMATIC Energy Manager PRO).

The following figure shows "output" according to the "IPO" principle:

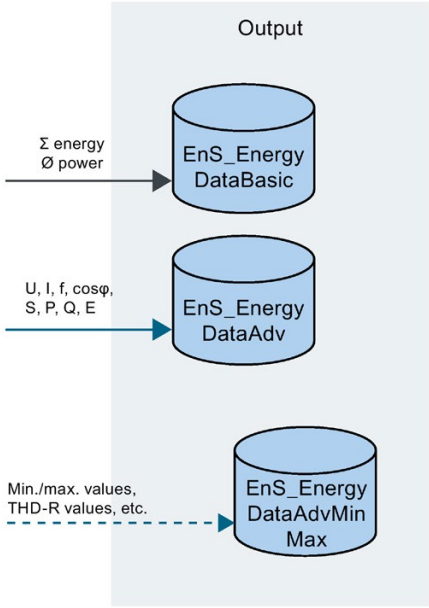

Cyclic energy values

Acyclic energy values

Blocks of the SIMATIC Energy Suite

The following table describes the components of a picture:

Function block	Description
EnS_EnergyDataBasic	Energy Suite block for providing the prepared basic energy data and metadata. The cyclic basic energy data are calculated to the following values by the "EnS_CalcEnergyData" Energy Suite block: • Energy consumption over a period (for example, 15 min.) • Average power over a period (for example, 15 min.) You can find additional information under "EnS_EnergyDataBasic: Providing metadata and energy values (Page 195)".
EnS_EnergyDataAdv	Energy Suite block for providing a data record with advanced energy values Advanced energy values (acyclic): • Voltage, current, cos φ • Apparent, active and reactive power etc. You can find additional information under "EnS_EnergyDataAdv: Providing advanced energy values (Page 193)".
EnS_EnergyData-AdvMinMax	Energy Suite block for providing a data record with minimum and maximum values of the advanced energy values Minimum and maximum values of the advanced energy values: • Voltage, current, cos φ • Apparent, active and reactive power You can find additional information under "EnS_EnergyDataAdvMinMax: Providing advanced minimum and maximum values (Page 194)".

5.6 Compiling and downloading the PLC program

Once the energy program is generated, compile the complete PLC program and download it to the S7-1500 CPU target system.

There are several ways to compile and download project data to the CPU. One version is described below. You can find additional information on this in the online help of the TIA Portal information system.

Requirement

- The energy program has been fully generated without error.
- The PLC program is also complete and error free.

Compile

To compile the entire PLC program (including the energy program), follow these steps:

1. Open the S7-1500 CPU in the project tree.
2. Click "Program blocks" object below the S7-1500 CPU and select the command "Compile > Software (rebuild all blocks)" from the shortcut menu.

   The PLC program is compiled. You can check to see if the compiling has been successfully executed in the Inspector window under "Info > Compile".
3. If needed, correct the causes of possible compiling errors and start the compiling again.

Download

To compile the entire PLC program on the CPU, follow these steps:

1. Open the S7-1500 CPU in the project tree.
2. Click "Program blocks" object below the S7-1500 CPU and select the command "Download to device > Software (only changes)" from the shortcut menu.
3. Follow the instructions of the wizard for charging. If required, select the interface for the online connection to the target system.

   The online connection to the CPU is established.
4. Click on the "Download" button and then the "Finish" button.

If the download was successful, the entire PLC program (including the energy program) is loaded into the CPU. If the download was not successful, consult the online help of the TIA Portal information system to learn about the further actions required.

5.7 Testing the energy program

The standard functions of STEP 7 (TIA Portal) enable you to test the acquisition and processing of the energy values.

Requirement

- The energy program has been fully generated without error.
- The PLC program has been successfully compiled and downloaded to the S7-1500 CPU.
- An online connection to S7-1500 CPU is available.
- Program execution is active (CPU in "RUN").

Procedure

To test the energy program, follow these steps:

1. In the "EO - <name of the acquisition object>" folder, open the data block for the acquisition object: <name of the acquisition object> [DBx].

   The contents of the data block with the metadata and energy data of the acquisition object opens in the working area.
2. Start the monitoring by clicking the "Monitor all" icon.

   The additional "Monitor value" column is displayed in the table. It displays the current data values. You can track and, in needed, control the current periodic energy values under the "energyData" structure

Behavior after regeneration of the energy program

The Energy Suite has the following behavior when the energy program is regenerated:

1. The entire energy program is deleted.
2. The energy program including changes is newly created.

   All unchanged acquisition objects are created exactly as before.
3. The addresses (symbolic names) of the DBs are changed when the following settings are changed:
   - Name of the acquisition object (instance DB of EnS_Drvxxx, EnS_CalcEnergyData, EnS_EnergyDataBasic)
   - Name of the measurement hardware used in the hardware configuration (instance DB of EnSL_DrvBasicxxx)
   - Name of the archiving period (instance DB of EnS_TimeSync)

Note

The DB numbers are assigned automatically by STEP 7 (TIA Portal).

5.8 Editing the PLC program without installation of Energy Suite

STEP 7 (TIA Portal) projects that have configured acquisition objects and parts of an energy program can be opened and edited on STEP 7 (TIA Portal) computers on which there is no installation of Energy Suite.

This allows you to further edit the device configuration or the rest of the PLC program, for example. The existing configuration of acquisition objects and the generated energy program remain unchanged in the project.

Response of the engineering system without an Energy Suite installation

When you open such a STEP 7 (TIA Portal) project on an engineering system without an Energy Suite installation, a dialog appears informing you that no installation of the Energy Suite is available. After confirming the dialog, you can change the project (excluding the Energy Suite objects), compile it, and download it to the target systems (S7-1500 CPU, PC station).

Possible application examples

The following figure and the following table show the applications that are possible for the project execution without installing Energy Suite:

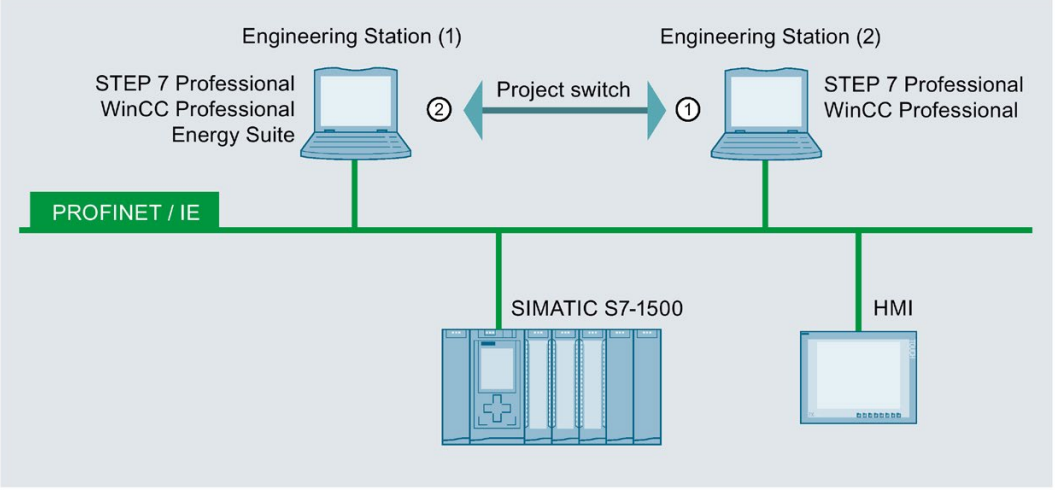

Application example	Newly created/changed project on engineering station (1) with	...can be further processed on the engineering station (2) with	Supported processing
①	• STEP 7 Professional • WinCC Professional • Energy Suite with at least acquistion object	• STEP 7 Professional	Opening and editing a STEP 7 (TIA Portal) project on the engineering station (2) containing an Energy Suite configuration but no Energy Suite installation. The Energy Suite configuration remains unchanged.
		• STEP 7 Professional • WinCC Professional	
Application example	**Project that can be further processed on engineering station (2) with**	**... can be further processed on the engineering station (1) with**	**Supported processing**
②	• STEP 7 Professional with unchanged Energy Suite configuration	• STEP 7 Professional • WinCC Professional • Energy Suite	Opening and editing a STEP 7 (TIA Portal) project on an engineering station (1) containing an Energy Suite installation after it was previously changed on an engineering station (2) without an Energy Suite installation. Note: If a PLC (S7-1500 CPU) with configured acquistion objects has been entirely deleted beforehand, the Energy Suite objects for this S7-1500 CPU are no longer available in the project.
	• STEP 7 Professional • WinCC Professional with unchanged Energy Suite configuration		

5.9 PLC program without measurement hardware library with driver blocks

STEP 7 (TIA Portal) projects that have configured acquistion objects and parts of an energy program for measurement hardware can also be opened and edited on STEP 7 (TIA Portal) computers on which there is no installation of the Energy Support Library.

This allows you to further edit the device configuration or the rest of the PLC program, for example. The existing configuration of acquisition objects and the generated energy program for measurement hardware remain unchanged in the project.

Response of the engineering system without Energy Support Library

When configuring the acquisition objects and assigning the energy data source, the measurement hardware for an Energy Support Library that no longer exists (for example, because the Energy Support Library was uninstalled) is no longer displayed in the list of possible energy data sources.

Measurement hardware already assigned as an energy data source for an Energy Support Library that is no longer available prevents regeneration of the energy program. The missing reference is displayed in the selection field of energy data source. Regeneration of the energy program is canceled as long as the missing reference is not corrected (for example, by changing the energy data source or by installing the Energy Support Library).

The remainder of the PLC program that is unaffected by the energy program can still be modified, compiled and downloaded to the target systems (S7-1500 CPU, PC station).

Visualizing and evaluating energy data 6

6.1 Procedural overview of archiving and visualization with WinCC Professional

Requirement

To perform the following configuration steps, the following requirements must be met in STEP 7 (TIA Portal) in the project tree below the S7-1500 CPU:

- For each CPU that provides energy data, the "WinCC Professional (data log)" archiving type is enabled.
  You can find additional information on this in the section "Setting the archiving on a PC station with WinCC Professional (Data Log) (Page 64)".
- The energy program has been fully generated without error.
- The PLC program has been successfully compiled and downloaded to the S7-1500 CPU.

Configuration steps

The following table provides an overview of the most important configuration steps for visualization and archiving of the periodic energy data with the WinCC Professional SCADA system.

These steps are performed in STEP 7 (TIA Portal) in the project tree below the PC station.

Topic	Step		Description
Visualizing and evaluating energy data	1.1	Configuring a PC station with WinCC Professional	A PC station with the SIMATIC "WinCC RT Professional" HMI application is required for the SCADA system.
	1.2	Creating a connection to the SCADA system	To enable data transfer between the S7-1500 CPU and the SCADA system, configure an HMI connection to the PC station with WinCC Professional in STEP 7 (TIA Portal).
	1.3	Reading and displaying energy values configured for archiving on the engineering system on the PC station (Page 102)	On the PC station with WinCC Professional, Energy Suite offers an overview of all acquisition objects and the periodic energy values that you have configured in the engineering system for archiving in the data log of WinCC Professional. With the "Refresh" function, synchronization is performed with the engineering data of the S7-1500 CPUs that can be reached by the PC station with WinCC Professional.

Topic	Step		Description
Visualizing and evaluating energy data	1.4	Configuring the SCADA system (Page 104)	Configuring the PC station with WinCC Professional: • For data transfer to the SCADA system, generate the HMI tags for the data blocks for buffering ("HMI tags" folder). • For archiving, generate the data log with the logging tags (energy values) and set up the archive segments for archiving (Page 107) of the periodic energy values ("Archive" folder). • For visualization of the collected energy data in runtime, you can integrate the template screens and screen elements from the Siemens Industry Online Support into the WinCC application ("Screens" folder). • For the visualization of the collected energy data in runtime, you can also use the automatically installed faceplates from the Energy Suite library. • With installed SIMATIC Visualization Architect (SiVArc), you can generate Screens based on created SiVArc rules for Energy Suite (Page 109). With SiVArc you generate the visualization for multiple HMI devices and PLCs from Energy Suite program blocks and vizualisation templates.
	1.5	Compiling and downloading the PC station with WinCC Professional	Next you compile the configuration for the entire PC station and download it to the SCADA system.
	1.6	Starting the PLC program and SCADA system (Runtime)	Once WinCC RT Professional is started on the SCADA system and the PLC programs are started on the S7-1500 CPUs, archiving is ready to begin. The selected periodic energy values are archived automatically. The archiving is performed continuously while Runtime is active.

6.2 Energy values on PC station with WinCC Professional

The periodic energy values prepared on the S7-1500 CPU can be transferred to the data log of WinCC Professional for long-term archiving. For example, this allows you to:

- Generate reports from energy values
- Visualize the energy values within WinCC Professional environment
- Transfer energy values to SIMATIC Energy Manager PRO for further processing on the management level

On the PC station with WinCC Professional, the Energy Suite offers an overview of all acquistion objects and the periodic energy values that you have enabled for archiving in the data log of WinCC Professional.

Once the SIMATIC Energy Suite has been successfully installed, there is this new "Energy data" folder in the project tree below the PC station with WinCC Professional.

The following figure shows the "Energy data" folder in the project tree.

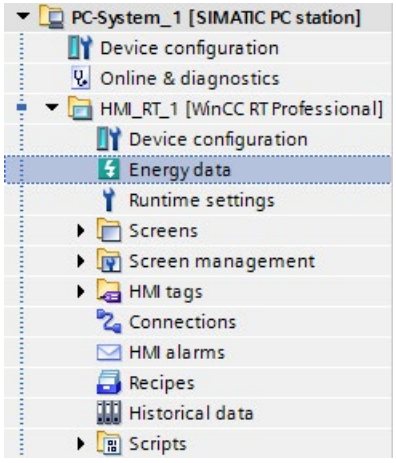

See also

Displaying energy values for archiving in WinCC Professional (Page 102)

6.3 Displaying energy values for archiving in WinCC Professional

You would like an overview of all acquisition objects and their periodic energy values that you have configured for archiving in the data log of WinCC Professional.

Requirement

- For each CPU that provides energy data, the "WinCC Professional (data log)" archiving type is enabled.

  You can find additional information on this in the section "Setting the archiving on a PC station with WinCC Professional (Data Log) (Page 64)".
- A PC station with the SIMATIC "WinCC RT Professional" HMI application is configured in your project.
- A valid HMI connection between the S7-1500 CPU and the PC station with WinCC Professional exists.

  You can find additional information on this in the online help of the TIA Portal information system under "Configuring HMI connections > Creating a new connection graphically".

Procedure

To display the energy values for the logging and archiving, follow these steps:

1. Open the PC station in the project tree.
2. Below the PC station, open the application "WinCC RT Professional".

   The "Energy data" object is visible below the application.
3. Double-click on the "energy data" object.

   A table with all the acquisition objects of S7-1500 CPUs of the entire project opens in the working area. This gives you an overview of all available acquisition objects and the periodic energy values to be archived in data log of WinCC Professional.
4. Click on the "Refresh" icon.

   The data in the table are read in again. A comparison is performed between the engineering data from this PC station and the S7-1500 CPUs that can be reached by WinCC Professional.

Result

For each acquisition object, there is an enable for the energy program and the configuration of the following energy values for archiving:

- Power consumption
- Energy consumption
- Energy counter value

The meaning of the displays is described in detail in the section "Overview of energy data (Page 103)".

Note

Quantity structure

- A maximum of 2000 acquisition objects can be archived with WinCC Professional.
- The acquisition objects of a maximum of 10 S7-1500 CPUs can be archived.

6.4 Overview of energy data

The "energy data" table in the "WinCC RT Professional" application provides an overview of the configured acquisition objects and the periodic energy values to be archived in data log of WinCC Professional.

Note

Adaptation of periodic energy values

The periodic energy values are only displayed in WinCC Professional. To change the settings of the periodic energy values, you have to switch to the configuration of the acquisition objects and the energy program settings below the S7-1500 CPUs.

The following table shows the settings for acquisition and archiving of the energy values in the data log of WinCC Professional:

Setting	Description
Name of the acquisition object	Displays the name of the acquisition object. The name can only be changed when configuring the acquisition object below the S7-1500 CPU.
Name of the CPU	Displays the name of the S7-1500 CPU to which the acquisition object is assigned
Enable acquisition object	Displays the enable status of the acquisition object for the generation of the energy program. You activate the enable when configuring the acquisition object below the S7-1500 CPU.
Power consumption	Indicates whether the periodic energy values of the power consumption are enabled for archiving
Energy consumption	Indicates whether the periodic energy values of the energy consumption are enabled for archiving
Energy counter value	Indicates whether the periodic energy values of the energy counter value are enabled for archiving
Duration of archiving period	Shows the duration of the archiving period. The duration can only be changed in the energy program settings below the S7-1500 CPU.
Name of the archiving period	Displays the name of the archive period. The name can only be changed in the energy program settings below the S7-1500 CPU.

Note

Quantity structure

- A maximum of 2000 acquisition objects can be archived with WinCC Professional.
- The acquisition objects of a maximum of 10 S7-1500 CPUs can be archived.

See also

Displaying energy values for archiving in WinCC Professional (Page 102)

Energy values on PC station with WinCC Professional (Page 101)

6.5 Create archiving structure for energy values

After synchronization of the energy data of the engineering system with the energy data of the PC station with WinCC Professional, generate the HMI tags and the data log with the logging tags for the energy values to be archived. This generation takes place automatically by pressing a button; manual adjustment afterwards is not required.

The generated data can then be compiled and downloaded to the SCADA system or is available for visualization in Runtime.

Requirement

- For each CPU that provides energy data, the "WinCC Professional (data log)" archiving type is enabled.

  You can find additional information on this in the section "Setting the archiving on a PC station with WinCC Professional (Data Log) (Page 64)".
- A PC station with the SIMATIC "WinCC RT Professional" HMI application is configured in your project.
- A valid HMI connection exists between the S7-1500 CPU and the PC station with WinCC Professional.

  You can find additional information on this in the online help of the TIA Portal information system under "Configuring HMI connections > Creating a new connection graphically".

Procedure

To generate the archiving structure for the energy values, follow these steps:

1. Open the PC station in the project tree.
2. Below the PC station, open the application "WinCC RT Professional".

   The "Energy data" object is visible below the application.
3. Double-click on the "energy data" object.

   The table with all acquisition objects and their archived periodic energy values is opened in the working area structured according to the S7-1500 CPUs of the entire project.
4. Click the icon "Create data log".

Result: HMI tags created

A new folder "Energy Suite - HMI tags" is created automatically in the "HMI tags" folder in the project tree below the PC station with all tags required for the data blocks for buffering.

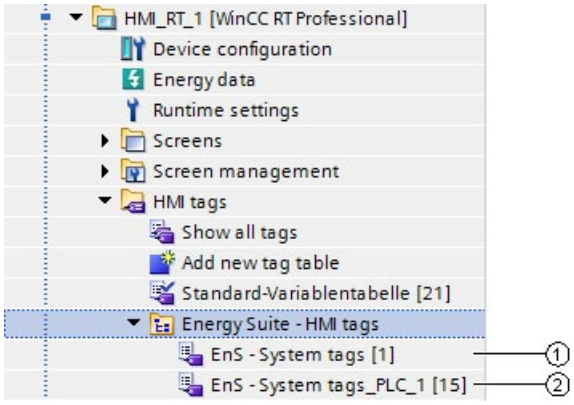

	Object	Description
①	EnS - System tags	Internal tag @EnS_SystemTag for the connection to the data log
②	EnS - System tags_<name of the CPU>	The following HMI tags are created for each data block n (n = 1, 2, 3, ...) for buffering (and therefore for each acquisition object table): • @EnS_Archive<n>_request_<name of the CPU> with the data type EnS_typeHMIWriteCtrl • @EnS_Archive<n>_statusWrite_<name of the CPU> with the data type EnS_typeHMIWriteStat • @EnS_Buffer<n>_<name of the CPU> with the data type EnS_typeValue

The associated table in the working area shows the created HMI tags and the HMI connection to the S7-1500 CPU. The HMI tags cannot be changed.

Result: Data log with logging tags

A new data log called "EnS_EnergyArchive" with default settings is automatically created in the working area for the "Archive" folder. The settings "Locked", "Manual input permitted" can be checked and changed, if necessary.

An archive tag with the name of the acquistion object and the extensions _energy, _power or _energyCounter is created in the "Logging tags" area for each energy value of all configured acquistionobjects that is to be archived. The generated logging tags are write-protected and connected to the internal tag "@EnS_SystemTag".

Parameter values are created in the "Comment for Runtime" column; these can be interpreted by the SIMATIC Energy Manager PRO for further processing.

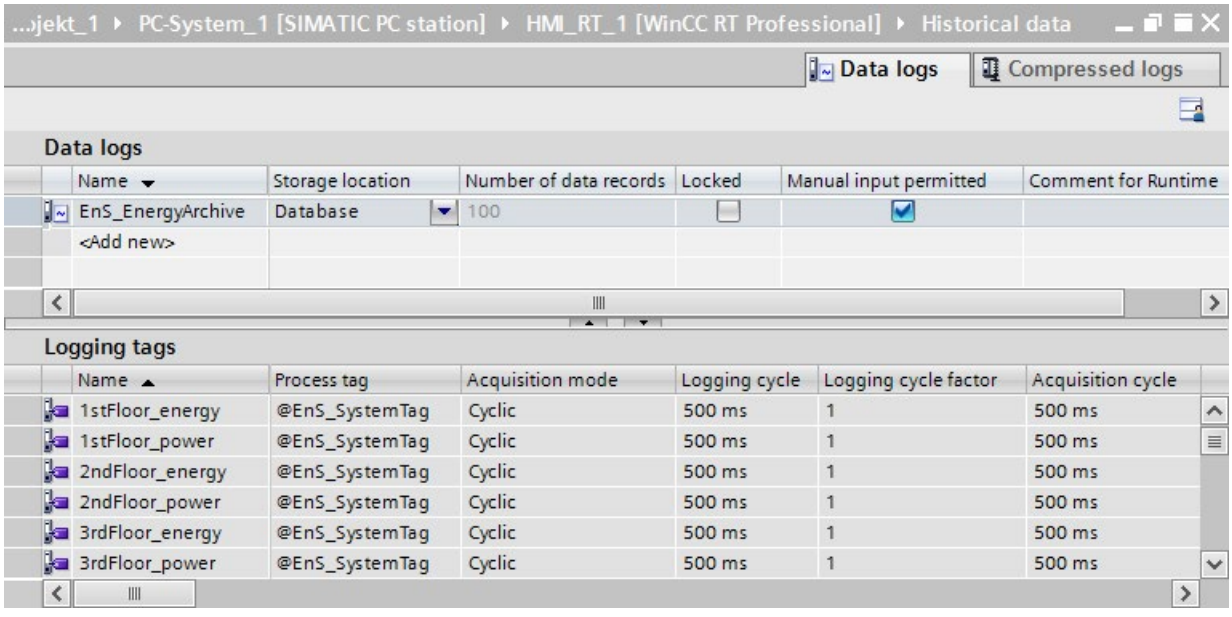

In addition, the Energy Suite component is entered in the startup list of WinCC Runtime under:

Runtime settings > Service > Additional tasks/applications

The generated data can be compiled and downloaded to the SCADA system or is available for visualization in Runtime.

Prior to compiling, check the Settings of the archive segments of the data log (Page 107) in the Runtime settings of the PC station.

6.6 Data log and segmentation for Energy Suite

The automatically created data log on the PC station with WinCC Professional enables long-term archiving of the energy values with time stamp so that the archived historical data can be used for empirical statistical analyses.

In the Runtime settings below the PC station with WinCC Professional, you also have the option of segmenting the data log and thereby defining its size.

Setup of the archive segments for archiving the periodic energy values is made in the working area under:

Runtime settings > Archiving > Archive segments

Recommendation for segmenting the data log

Several archive segments of equal size are created in a segmented circular log and successively filled with periodic energy data (process values). When all segments are completely filled, the oldest segment is overwritten and the energy data it contains is lost.

Only the energy data within the period that contains all segments is accessed for long-term archiving. The time period is set to 1 week by default.

The following Energy Suite recommendations apply to continuous long-term archiving of energy data.

- Time period of all segments: 2 years
- Maximum size of all segments: 24 GB
- Time period contained in a single segment: 1 month
- Maximum size of a segment: 1 GB
- Backup: Activated

Also set the path for the backup on a backup server.

6.7 Archiving energy data

Once both WinCC RT Professional and the PLC program have started, archiving is ready to begin. The periodic energy values are archived automatically. The archiving is performed continuously while Runtime is active.

Requirement

- The project has been compiled and downloaded to the target systems (CPUs and PC station with WinCC Professional).
- There are online connections to the S7-1500 CPUs.
- The program processing on the S7-1500 CPUs is active (CPU in "RUN").
- PC station with WinCC Professional is in Runtime ("Start runtime").

Result

The archived data include:

- Time stamps generated by the CPU
- Parameters of the acquisition objects, for example:
  - Name of the acquisition object
  - Acquisition object detection
  - High/low limit
  - Name of the data log
- Periodic energy values over an archiving period:
  - Energy counter value
  - Energy consumption
  - Power consumption
- Tag attributes (e.g. Quality Code)

Table view

Time column	EO1_Power	EO1_Energy	EO2_Power	EO2_Energy
6/16/2016 1:02:00 PM	111.11100769043 m.	1.8518500328064 m.	222.222015380859 m.	3.70370006561279 m.
6/16/2016 1:03:00 PM	111.11100769043 m.	1.8518500328064 m.	222.222015380859 m.	3.70370006561279 m.
6/16/2016 1:04:00 PM	111.11100769043 m.	1.8518500328064 m.	222.222015380859 m.	3.70370006561279 m.
6/16/2016 1:05:00 PM	111.11100769043 m.	1.8518500328064 m.	222.222015380859 m.	3.70370006561279 m.
6/16/2016 1:06:00 PM	111.11100769043 m.	1.8518500328064 m.	222.222015380859 m.	3.70370006561279 m.

6.8 Create screens for Energy Suite with SiVArc

6.8.1 Create SiVArc screen rules and copy rules for Energy Suite

You can create screen rules for Energy Suite blocks using SiVArc.

Overview of rules

Individual rules will be available for each of the below Energy Suite blocks:

- EnS_EnergyDataBasic: collects basic energy data and serves as an interface to an HMI system
- EnS_EnergyDataAdv: collects advanced energy data and serves as an interface to an HMI system
- EnS_LmgtControl_Peak: controls load management based on the forecast
- EnS_LmgtActor_Consumer: controls the consumers based on commands from control block
- EnS_LmgtActor_Producer: controls the producer based on commands from control block

Pre-condition

- SIMATIC Visualization Architect (SiVArc) and SIMATIC Energy Suite version must be similar.
- Energy Suite rules are processed and screens are generated without a mandatory SiVArc license.

Requirement

- Energy Suite license is available.
- SIMATIC Visualization Architect (SiVArc) is installed.

Procedure

To create the SiVArc screen rules, perform the following steps:

1. Open the S7-1500 CPU in the project tree.
2. Right click "Acquistion objects" > "Create SiVArc rules for Energy Suite" below the S7-1500 CPU.

   Alternatively, you can select this option in the "Energy program settings" editor by clicking the "Create SiVArc Screen rules for Energy Suite" icon.

   Rules created through "Copy rules" feature also is used in screen generation.
3. Open the "Common data" folder in the project tree.
4. Open the "SiVArc" folder and double-click on the "Screen rules" object.

Result

System screen rules and copy rules are **read only**, and are available under “System Screen rules” tab of SiVArc’s screen rules editor, and displays the following fields:

- Name: Unique name of the screen rule with structure "EnS_<blockname>_<WinCCdevice>"; WinCCdevice = WinCCComf/WinCCPro

  Example "EnS_EnergyDataBasic_WinCCComf″
- Created by: Energy Suite
- Program block: see list under section "**Overview of rules**"
- Master copy of a screen: Name of the required template of Energy Suite screens from the Energy Suite Library (subfolder "EnS_Visualization")
- Screen type: The faceplate type or screen type that is used in visualization
- Copy rules: Allows you to copy the existsing tags and screens from the library to the respective HMI device

6.8.2 Create screens for Energy Suite

You can create screens for Energy Suite blocks that uses faceplates configured with tags for viewing runtime data. SiVArc automates the screen generation through SiVArc rules, and generates screens.

Pre-condition

- SIMATIC Visualization Architect (SiVArc) and SIMATIC Energy Suite version must be similar.
- Supported by Comfort and Professional devices only
- For load management, professional devices are supported.

Requirement

- Energy Suite license is available.
- SIMATIC Visualization Architect (SiVArc) is installed.
- SiVArc screen rules for Energy Suite (Page 109) are created.
- Successful generation of energy program

Procedure

To generate the screens for Enery Suite follow these steps:

1. Open the PC station in the project tree.
2. Below the PC station, select the HMI device "WinCC RT Professional".
3. You can generate SiVArc screens by clicking the global tool bar icon.

   Alternatively you can right click on the HMI device, and select "Generate the visualization (SiVArc)".

   The "Select and generate devices" pop-up window displays.
4. For a specific HMI device, under "Rule Set" drop-down, select "Energy suite rules" > "Generate".

   For more information on the generaton process, you can view the feedback window.

Result

Screens using Energy Suite rules are created, and are available under "Screens" folder within a HMI device

For comfort devices, screens are generated and are available under "Screen management" and "Pop-up screens"

For successive generations, repeat the steps for each PC station.

To view the SiVArc generated screens associated with faceplate in runtime, you must configure Load management with Energy suite rules, and perform the following:

1. Navigate to Library pane and then to Project library -> Master copies -> "Scripts"
2. Copy the folder "Acquisition" and paste to "WinCC Runtime Professional" -> "Scripts" -> "VB scripts"
3. Copy the folder "LMGT" and paste to "WinCC Runtime Professional" -> "Scripts" -> "C scripts"

6.9 Visualize energy data with WinCC Online Trend View

You can track the course of the periodic energy values

- Graphically via WinCC Online Trend Control (with connection to the data log)
- Numerically via the Energy Suite Export Tool (Page 114) (included in the installation scope of the Energy Suite)

Visualization with WinCC Online Trend View

The WinCC Online Trend View is used to display periodic energy values archived in the data logs as a trend in Runtime. You can configure the graphical representation of the energy values yourself. To do this, create trend windows and connect the values in the trend to the logging tags of the required energy values.

You can find additional information on this in the WinCC Information System under the keyword "WinCC Online Trend View".

The following figure shows an example for displaying energy values in WinCC Online Trend View:

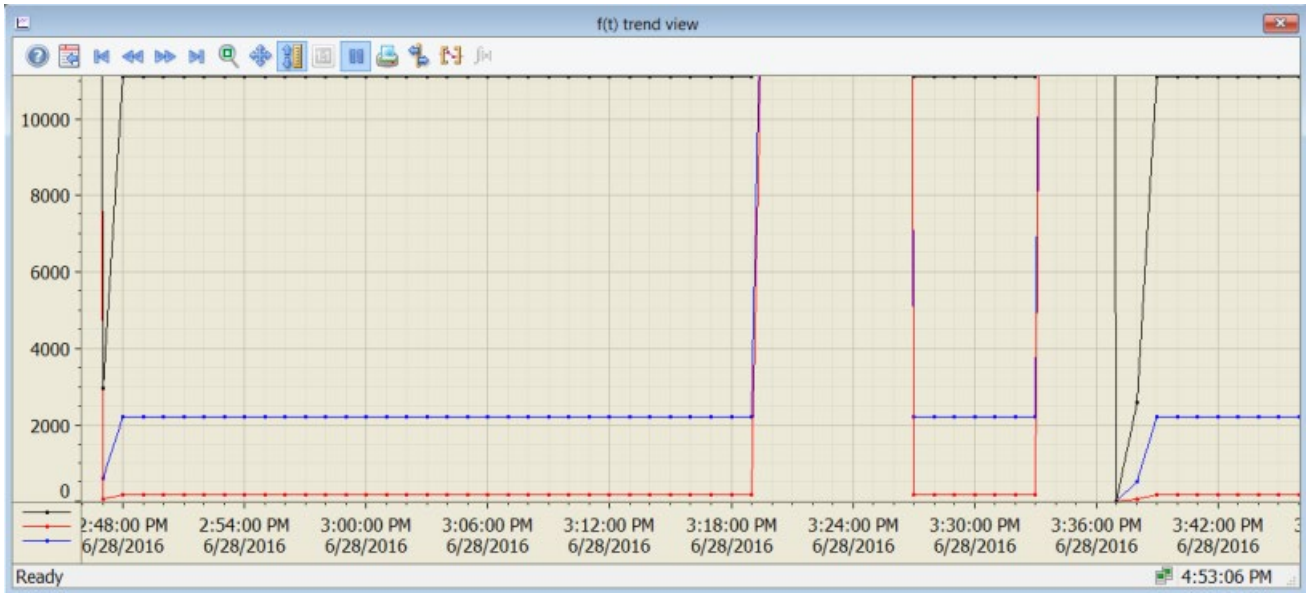

6.10 Evaluate energy data with Energy Suite Export Tool

The Energy Suite Export Tool supports you in evaluating the acquired energy values in Microsoft Excel format.

The Energy Suite Export Tool is part of SIMATIC Energy Suite Runtime and is installed together with it on the PC station with WinCC Professional. You can find additional information on this in the installation instructions for Energy Suite on the DVD.

You can use the Energy Suite Export Tool to export the periodic energy values archived in the data logs to an external file in Runtime. The data exported in this way can then be opened in Microsoft Excel and evaluated.

In addition, you can generate cost center reports with the tariff set you have created with the Energy Suite Export Tool. You assign these cost center reports to your cost centers.

Note

To generate a cost center report, you must have created at least one tariff set and one cost center.

Based on the defined tariff sets and cost centers, the cost center report shows you the energy consumption and the resulting energy costs. You can open and analyze the cost center report in Microsoft Excel.

Possible export format:

- .xlsx
- Compatible with Microsoft Excel Version 2010 and higher

Possible creation of report:

- Manual report
- Automatic report

Start Energy Suite Export Tool and create manual report

1. Select the menu command Start > Siemens Automation > Options and Tools > SIMATIC Energy Suite Runtime Toolbox > SIMATIC Energy Suite Export Tool.

   The Energy Suite Export Tool opens.

2. Check the name of the WinCC server:
   - When WinCC Professional is in Runtime, the server name (name of the local Runtime PC) is entered automatically.
   - Otherwise, you can manually set the server connection using the menu command Settings > WinCC Server.
3. Select the interface language (English, German) with the menu command Settings > Languages.

4. Configure the template for the reports using the Report menu. The following settings are possible, for example:
   - Report type: Export of archived measured values or Cost center report
   - Execution as "Manual"
   - Report name
   - File name (made up of the name of the report, date and time of report creation)
   - Storage path
   - Tariff rate (for Cost center report)
   - Unit (is specified automatically according to the tariff set)
   - Data log and logging tags for evaluation (for Export of archived measured values)
   - Cost center (for Cost center report)
   - Time period that the report evaluates (reporting period)

   Note

   The units for cubic meters m^3 is shown in the Energy Suite Export Tool as "m3".

5. Start the export to Microsoft Excel with the menu command Report > Create or click on the icon.

   This step requires a connection to the WinCC server with WinCC Professional in Runtime.

Result

The following figure shows an example for displaying energy values in the Energy Suite Export Tool:

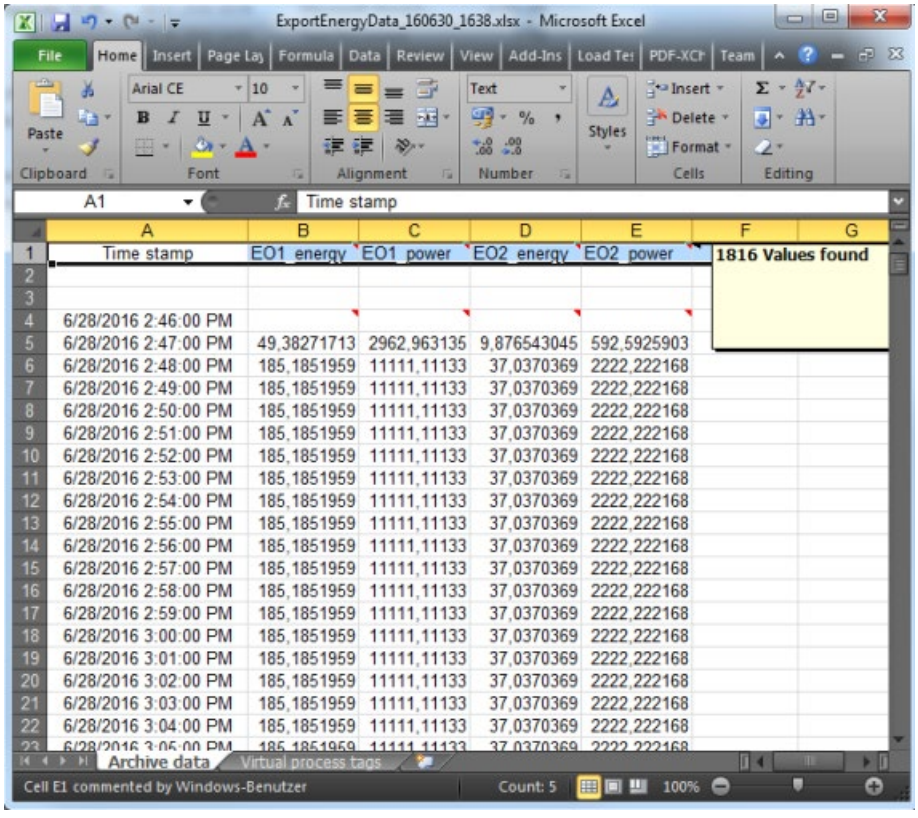

	Time stamp	EO1_energy	EO1_power	EO2_energy	EO2_power
4	6/28/2016 2:46:00 PM				
5	6/28/2016 2:47:00 PM	49,38271713	2962,963135	9,876543045	592,5925903
6	6/28/2016 2:48:00 PM	185,1851959	11111,11133	37,0370369	2222,222168
7	6/28/2016 2:49:00 PM	185,1851959	11111,11133	37,0370369	2222,222168
8	6/28/2016 2:50:00 PM	185,1851959	11111,11133	37,0370369	2222,222168
9	6/28/2016 2:51:00 PM	185,1851959	11111,11133	37,0370369	2222,222168
10	6/28/2016 2:52:00 PM	185,1851959	11111,11133	37,0370369	2222,222168
11	6/28/2016 2:53:00 PM	185,1851959	11111,11133	37,0370369	2222,222168
12	6/28/2016 2:54:00 PM	185,1851959	11111,11133	37,0370369	2222,222168
13	6/28/2016 2:55:00 PM	185,1851959	11111,11133	37,0370369	2222,222168
14	6/28/2016 2:56:00 PM	185,1851959	11111,11133	37,0370369	2222,222168
15	6/28/2016 2:57:00 PM	185,1851959	11111,11133	37,0370369	2222,222168
16	6/28/2016 2:58:00 PM	185,1851959	11111,11133	37,0370369	2222,222168
17	6/28/2016 2:59:00 PM	185,1851959	11111,11133	37,0370369	2222,222168
18	6/28/2016 3:00:00 PM	185,1851959	11111,11133	37,0370369	2222,222168
19	6/28/2016 3:01:00 PM	185,1851959	11111,11133	37,0370369	2222,222168
20	6/28/2016 3:02:00 PM	185,1851959	11111,11133	37,0370369	2222,222168
21	6/28/2016 3:03:00 PM	185,1851959	11111,11133	37,0370369	2222,222168
22	6/28/2016 3:04:00 PM	185,1851959	11111,11133	37,0370369	2222,222168
23	6/28/2016 3:05:00 PM	185,1851959	11111,11133	37,0370369	2222,222168

Start Energy Suite Export Tool and create automatic report

1. Select the menu command Start > Siemens Automation > Options and Tools > SIMATIC Energy Suite Runtime Toolbox > SIMATIC Energy Suite Export Tool.

   The Energy Suite Export Tool opens.

2. Check the name of the WinCC server:
   - When WinCC Professional is in Runtime, the server name (name of the local Runtime PC) is entered automatically.
   - Otherwise, you can manually set the server connection using the menu command Settings > WinCC Server.
3. Select the user interface language (English, German) with the menu command Settings > Languages.
4. Save the language settings with the menu command File > Save settings.

5. Configure the report template via the Report menu. The following table shows all possible settings. The last table column shows the concrete values for the following examples:
   - Example 1: Automatic archived measured value report is to be created each Monday at 12:15 AM for the elapsed week, for the period of the vacation from 17/07/2017 to 18/08/2017.
   - Example 2: Automatic archived measured value report is to be created continuously on the 2nd of each month at 09:00 AM for the last month.

Parameter	Description	Value range	Value for example
Type (Type)	Type of the report	Archived measured values export Cost center report	• Archived measured values export
Trigger (Execution)	Execution of the report	• Manually • Automatically	• Automatically
Name (Name)	Name of the report	-	For example 1: • WeeklyReport For example 2: • MonthlyReport
File name (File name)	File name of the report, made up of the name of the report, date and time of report creation.	-	For example 1: • WeeklyReport_170717_1215.xls For example 2: • MonthlyReport_170702_0900.xls
Path (Path)	Storage location of the created report	-	• C:\Users\Administrator\Desktop\
Tariff set (Tariff set)	Selection of the tariff set	-	For example 1: - For example 2: -
Unit (Unit)	Unit of energy consumption (automatic from tariff set)	-	For example 1: - For example 2: -
Cost centers (cost centers)	Selection of cost center	-	For example 1: - For example 2: -
Report cycle (Report cycle)	Cycle in which the report is created	• Daily • Weekly • Monthly • Yearly	For example 1: • Weekly For example 2: • Monthly

Parameter	Description	Value range	Value for example
Time of day (Time of day)	Time at which the report is created	• 12-hour format • 24-hour format	For example 1: • 12:15:00 AM For example 2: • 09:00:00 AM
Week day (Weekday)	Weekday on which the report is created. Can only be selected if report cycle = weekly.	Monday - Sunday	For example 1: • Monday For example 2: -
Day (Day)	Time at which the report is created. Can only be selected if report cycle = monthly or annually.	1 - 28	For example 1: - For example 2: • 2
Month (Month)	Month in which the report is created. Can only be selected if report cycle = annually.	January - December	For example 1: - For example 2: -
Time period (Time period)	Period that the report evaluates	For "daily" report cycle: • Start, End • Last day • Elapsed day (00:00 - 24:00)	For example 1: • Elapsed week (Monday - Sunday) For example 2: • Last month
		For "daily" report cycle: • Last week • Elapsed week (Monday - Sunday)	
		For "monthly" report cycle: • Last month • Elapsed month (1st - end of month)	
		For "annual" report cycle: • Last year • Elapsed year (January - December)	

Parameter	Description	Value range	Value for example
Valid period (Valid period)	Entire period for which the reporting is permitted and valid	• Start: Current date (set by default) • End: 12/31/2099 12:00:00 AM (set by default)	For example 1: • Start: 07/15/2017 12:15:00 AM End: 08/15/2017 12:15:00 AM For example 2: • Values are set by default

Note

The units for cubic meters m^3 is shown in the Energy Suite Export Tool as "m3".

6. Once the report template has been fully configured, click on "Finish".

   A task will automatically be added to the Windows Task Scheduler and executed in the configured report cycle . The reports are stored in the configured storage path.

Creating tariff sets

To create tariff sets, follow these steps:

1. Select the menu command "Settings > Tariff set".
   The "Manage tariff sets" dialog opens.
2. To create a new tariff set, click on the "Add tariff set" icon in the toolbar.

   The "Add tariff set" dialog opens.
3. Configure the template for the tariff sets. The following settings are possible, for example:
   - Template name of the tariff set
   - Unit price per energy consumption
   - Assignment of tariffs to time ranges and weekdays
   - Price per energy consumption
   - Hiding holidays

   The following entries are required:
   - Template name
   - One tariff selection per weekday
   - Tariff must cover complete day (time range) per weekday
4. Click on the "Add" button.

   The tariff set is added to the list in the "Manage tariff sets" dialog.

Reaction to error

Note

If an unexpected response occurs (for example, WinCC Professional database does not start), the error messages are stored in the file "Siemens.Simatic.EnergyMgmt.WinCCprof.DataExportTool.txt" under "C:\Program Files (x86)\Siemens\Automation\SCADA-RT_V11\WinCC\bin\config".

Optimizing energy consumptions 7

7.1 Load management with Energy Suite

Load management

In growing industry sectors, the demand for energy consumption is highly intensive. Factory owners often pay little attention to energy costs in general, and electricity costs in particular, because of their minor impact on total costs. With increasing electricity prices, and introduction of varying prices based on time, manufacturing plants can reschedule or prioritize their operations to reduce their electricity tariffs.

Load management comes as a rescue concept for industries where consumers or producers take necessary action to switch load in order to gain from total system peak load, and exert efficient utilization of essential commodities, and distribution capacity.

Optimal load schedule results in significant reduction of peak period demand, and electricity cost. Generally, consumers are made aware of their need to reduce the power load at short notice from energy utilities.

With load management, consumers are stimulated to lower their demand in critical supply periods, and increase it when the cheap and abundant power capacity is available. Producers on the other side, switch their power production capacity based on the demand, and also stimulate the use of backup generation, which results in the efficient utilization of resources without adversely affecting the energy service. Both consumer and producers generate a tangential effect on the total energy consumption resulting in reduced production costs.

Load management with SIMATIC Energy Suite

Load management acts as a monitoring component which ensures that the power and energy consumption does not exceed the user defined limit energy value. Load management component contains a key user defined element called as actors. Actors can be of the following types:

- Consumer: Sectors that consumes power
- Producer: Sectors that produce power

Load management program consists of blocks such as the following:

- Forecast block
- Control block
- Actor block
- Backup/Restore block

The Forecast block receives its input from the Infeed that is the acquisition object. For example, in a power plant, the infeed will be the input from the power grid to the receiver.

The Forecast block calculates or predicts the average power and energy value using the infeed at the end of a stipulated time period.

Consider monitoring of a manufacturing plant through load management component. The Forecast block receives the infeed from the power grid, and monitors the power consumption.

- The energy uitilization is constantly monitored against a threshold limit over a certain time period. If the Forecast block's data is exceeding the threshold value, the load Management triggers an alert, warning or limit violation and directs the consumer (actor) to switch off state. This process is termed as escalation.
- Post the threshold peak, when the power consumption is minimal or within the threshold limit value, the producer (actor) are switched on. This process is termed as de-escalation.
- The time period between the escalation and de-escalation is termed as suppression delay.
- The time taken to start new observation of escalation and de-escalation is termed as Stabilization time.

7.2 Procedural overview for load management

Requirement

To perform the following configuration steps, the same requirements must be met as described in section "Procedural overview (Page 18)".

Configuration steps

You can find an overview of the most important configuration steps for energy data management with the Energy Suite components before the configuration for load management in section "Procedural overview (Page 18)".

The following table provides an overview of the most important configuration steps for load management with the Energy Suite components:

Topic	Step		Description
Optimize energy consumptions	1.1	Activating forecast feature of an acquisition object (Page 129)	In order to create a load management system, you have to activate the forecast feature of an acquisition object. Only acquisition objects with the activated forecast feature are available for load management. Each acquisition object can be activated for load management.
	1.2	Creating a load management system (Page 131)	Load management systems are used to manage infeed objects. You can create a maximum of 5 active load management systems, each one with a different enabled acquisition object respectively infeed object.
	1.3	Setting the properties of a load management system (Page 132)	Each load management system represents the strategy of optimizing energy consumptions and must be correspondingly configured. • Select an acquisition object as infeed object • Set the power limits to a user defined value • Check the enable of load management systems for the energy program
	1.4	Adding an actor (Page 135)	Actors are used to consume and/or produce energy. Create and define actors, each one with a different type.
	1.5	Setting the properties of the actor (Page 136)	Each actor represents how to react to the infeed for the load management and must be correspondingly configured. • Select the actor type for each actor • Set the feedback mode and feedback source • Check the enable of actors for the energy program

Topic	Step		Description
Generate energy program for load management	2.1	Making general settings for the energy program (Page 71)	Before generating the energy program, set the starting time of the blocks in the energy program. You also define the alarm suppression.
	2.2	Check the enable of acquistion objects for the energy program and adapt it if necessary (Page 43)	At the latest before generating the energy program, you need to decide which acquisition objects (and thus which measuring points) are to be included in the energy program. You can easily enable/disable the acquisition objects in the acquisition object tables.
	2.3	Generate energy program (Page 139)	You start the generation of the PLC program for energy data acquisition and processing (or energy program for short) from the project tree. During the generating process, the required blocks and data types from the Energy Suite Library and load management library are automatically used in the energy program and interconnected according to the configured acquistion objects. The generated energy program is created below the S7 CPU in the "Energy Suite - Program" subfolder of the "Program blocks" folder.
	2.4	Compiling and downloading the PLC program (Page 93)	Once the energy program is generated, compile the complete PLC program and download it to the S7-1500 CPU target system.
	2.5	Testing the energy program (Page 94)	To check your settings, open the relevant data block of the respective acquistion object in the energy program and watch the online values with the "Monitor all" function.

7.3 Performance features and conventions

Compatibility of load management with CPU and FW

The following table shows the compatibility of CPUs to respective Energy Suite load management versions.

CPU / ET 200SP CPU / ET 200SP Open Controller	FW	Energy Suite load management version
S7-1500 CPU	≥ V2.0	V16.0

Performance features of load management

The following table shows the performance features of the load management:

Characteristic	Value
Maximum number of enabled load management systems for program·generation	5
Maximum·number of·load·management·systems	99
Maximum number of actors per load management system	999

Note

Out of the available 99 load management systems, only 5 can be active across multiple PLCs.

You can find additional information on performance features of common Energy Suite components in section "Performance features and conventions (Page 21)".

Naming conventions

The following table shows the naming conventions of engineering with load management:

Object	Value range for name	Range of validity
Load management systems	• 1 - 26 characters • Permitted characters: – 0 ... 9 – a ... z – A ... Z – - – _	• Unique project-wide for archiving type "WinCC Professional (data log)"
Actors	• 1 - 32 characters • Prohibited characters: – : ? ' * " \ $ % § ° – <Space> – <Line feed> – <Line break>	• Unique project-wide for archiving type "WinCC Professional (data log)"

You can find additional information on naming conventions of common Energy Suite components in section "Performance features and conventions (Page 21)".

Note

Unique names

The object names must be unique at least CPU-wide. You cannot use a name that has already been assigned to a block, a PLC tag or a constant within the CPU for a new object. Actor and load management system must contain unique name. No distinction is made between upper and lower case when checking the uniqueness of the name.

7.4 Optimize energy consumptions

7.4.1 Energy program for load management

For optimizing energy consumptions, define acquisition objects and load management systems in STEP 7 (TIA Portal) in the project tree below the S7-1500 CPU. The acquisition objects are used for the infeed of load management systems. Load management systems are used for creating actors which consume and/or produce energy. Both of them can be used subsequent for the generation of an energy program.

There is the new "Load management" folder below the "Energy objects" folder in the project tree for this after the successful installation of SIMATIC Energy Suite. The following figure shows the "Load management" folder in the project tree, with the subfolder "Load management systems".

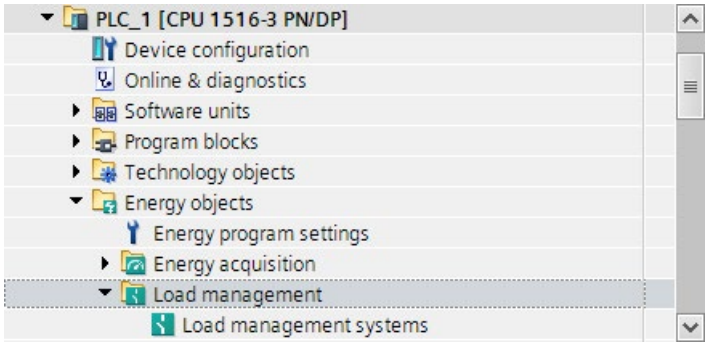

Infeed objects

The infeed objects refer to the acquisition object data source that you would like to input for the load management block to forecast energy data. The infeed to load management block can only be an acquisition object that you have configured for an acquisition object table. While selecting the infeed for a load management block, the acquisition object tables configured for a specific PLC is only displayed. Based on the energy data source that you choose, the corresponding load management blocks, and instance data base blocks are generated.

Instructions for actors and limits

For each of the load management block that you select, you can choose to configure its associated actor, power limit mode and Limit tag. You can configure the actor field with a unique name. The actor type can be either:

- Consumer
- Producer

The power limit mode can be of the following:

- WinCC operator (static): Refers to the run time data. The power limit mode can be a static value that you set during the run time. The forecast block triggers appropriate warnings or alerts, or a limit violation to the load management when this value is reached. You can switch the actors accordingly.
- PLC tag (dynamic): Refers to the PLC tag value that you configure in the "PLC tags" node. The forecast block triggers appropriate warnings or alerts, or a limit violation to the load management when this value is reached. You can switch the actors accordingly.

The Limit tag refers to the tag value set in the data block. You can configure the Limit tag only when the PLC tag option is selected. The Limit tag can be set using the PLC tag or the Data block tag.

Note

The data type supported for data block are Real and LReal only.

Programming rules

Note

The "EnS_" and "EnSL_" prefix is reserved for the Energy Suite.

Before generating the energy program, make sure that the prefix "EnS_" and "EnSL_" is not used in your existing PLC program (user blocks, tags, UDTs or technology objects). In this way, you avoid unintentional overwriting when generating the energy program.

7.4.2 Activating forecast feature of an acquisition object

Activating the forecast feature of an acquisition object is mandatory for using infeed objects in load management systems.

You can find additional information about creating acquisition objects in the section "Adding acquisition objects for acquisition object tables (Page 37)".

You have the following options for activating forecast feature of an acquisition object:

- In the Inspector window: when creating the acquisition object and assigning parameters to it
- In the acquisition object table: central and clear for all associated acquisition objects

Requirement

- An acquisition object table has been created in the "Energy acquisition" folder below the S7-1500 CPU.
- An acquisition object has been created in the acquisition object table.

In the Inspector window

To activate the forecast feature of an acquisition object, follow these steps:

1. Open the "Energy objects" folder below the S7-1500 CPU.
2. Open the "Energy acquisition" folder.
3. Double-click on the acquisition object table in which the acquisition object has been created.
   The acquisition object table with the created acquisition objects opens.
4. Click on the desired acquisition object in the acquisition object table.
   The properties of the acquisition object are displayed in the "Properties" Inspector window.
5. Select the "Configuration > Periodic energy data" item in the navigation area.
6. Select the check box "Enable periodic forecast for acquisition object".

   The acquisition object is enabled for periodic forecast respectively load management systems.

This setting for the acquisition object is also updated within the "Forecast" column of the acquisition object table.

In the acquisition object table

To activate the forecast feature for 1 or multiple acquisition objects when needed, follow these steps:

1. Open the "Energy objects" folder below the S7-1500 CPU.
2. Open the "Energy acquisition" folder.
3. Double-click on the acquisition object table in which the acquisition objects has been created.

   The acquisition object table with the created acquisition objects opens.
4. Select the check box of the "Forecast" column in the acquisition object table for all acquisition objects you want to enable for load management.

   The acquisition objects with selected check box are enabled for periodic forecast respectively load management systems.

This setting for the acquisition objects is also updated in the "Properties" Inspector window.

Result

In the runtime:

- Average power demand and total energy consumption will be forecasted until the end of the current period.
- Forecast of the average power demand [kW] until the end of the current period is available.
- Forecast of the average energy consumption [kWh] until the end of the current period is available.

7.4.3 Creating a load management system

In order to optimize energy consumptions, create load management systems for your individual load management strategy. You create load management systems in the "Load management" folder below the "Energy objects" folder.

You can find additional information about the possible number of load management systems and naming conventions in the section "Performance features and conventions (Page 125)".

Requirement

- An S7-1500 CPU is configured in the project.

Procedure

To create a load management system, follow these steps:

1. Open the S7-1500 CPU in the project tree.
2. Open the "Energy objects" folder below the S7-1500 CPU.
3. Open the "Load management" folder.
4. Double-click on the "Load management systems" object.

   The table of load management systems opens in the upper half of the working area.
5. Double-click "<Add new>" in the "Name" column of the load management systems.

   A new load management system is created in the load management systems.

If needed, create additional load management systems in the same way. Continue creating load management systems below any other S7-1500 CPU nodes or the current CPU node. You can copy paste the Laod management within the Load management editor.

Copying and sorting load management systems

- Load management systems can be copied via the shortcut menu. After copying, check the properties of the load management system and adapt the copied settings as needed. During copy/paste operation, all the columns get copied except for "Enable generation". While copy/paste operation, maximum of only 5 load management systems can be active.

Note

Copy/paste of load management system can only be performed. The actors associated with a load management will be copied.

- You can sort the "Name" column in ascending or descending order by clicking the arrow beside "Name".

7.4.4 Setting the properties of a load management system

7.4.4.1 Configuring a load management system

Each load management system represents the strategy of optimizing energy consumptions and is correspondingly configured by you. You configure a load management system in the "Properties" Inspector window.

For each load management system, you define:

- Select an acquisition object as infeed object
- Set the power limits to a user defined value
- Enable of the load management system for the energy program

The energy program is generated based on the configured properties.

Requirement

- An acquisition object table has been created in the "Energy acquisition" folder below the S7-1500 CPU.
- An acquisition object with activated feature "Forecast" has been created in the acquisition object table.

Procedure

To open the "Properties" Inspector window of a load management system, follow these steps:

1. Open the "Energy objects" folder below the S7-1500 CPU.
2. Open the "Load management" folder.
3. Double-click on the "Load management systems" object.

   The table of load management systems opens in the upper half of the working area.
4. Click on the desired load management system in the table of load management systems.

   All parameters of the load management system are displayed in the "Properties" Inspector window.

The configuration of the load management system is described in detail in "General settings (Page 133)".

Note

Any changes made in the inspector window will be reflected in the properties window, and vice versa applicable.

Forecast power value conditions

When actual power or energy forecast decreases the configured power limit in conjunction with tolerance, then load management performs de-escalation.For the de-escalation to be performed, ensure that active load management is configured, and is downloadable to a PLC.

7.4.4.2 General settings

A load management system has the following configuration parameters:

Setting	Description
Name	CPU-wide unique name of the load management system. The name can be changed according to individual requirements. You can find additional information about naming conventions in the section "Performance features and conventions (Page 125)".
Enable generation	Decides if load management needs to be activated during energy program generation. • When this check box is selected, the load management system is enabled for generating the energy program. • When the check box is not selected, the load management system is not used in the energy program. If the number of Runtime licenses for the Energy Suite is fewer than the number of enabled load management systems, the generation of the energy program is canceled and an error alarm is displayed. Load management systems that are not enabled are ignored by the license count. Only 5 load management systems can be active per S7- 1500 CPU. After selecting 5 load management systems, the enable generation check box is disabled, and an error message is displayed.
Infeed	Selection of the infeed. The infeed is the energy data source which can either be hardware or software data. An acquisition object is the infeed for the load management system. The infeed is the power value to be forecasted until the end of the current period of the selected acquisition object. • When the actual power of infeed is greater than the limit, the load management system is able to escalate. • When the actual power of infeed is lower than the limit, the load management system is able to de-escalate. You can configure same infeed for multiple load management systems. The info "The forecast block calculates the energy data as per the value set in this parameter".
Archiving period	Archiving period of the infeed object. The infeed object assumes the archiving period (and unit) of the corresponding acquisition object. The archiving period can just be changed in the configuration of the acquisition object.
Power limit mode	Selection of the power limit mode. The power limit mode can be selectable as the following: • WinCC operator (static) - Disables the table field for limit tag • PLC tag (dynamic) - Enables you to browse the PLC tag table

Setting	Description
Limit tag	When the power limit mode "PLC tag (dynamic)" is selected, the Limit tag is configurable. For a "PLC tag (dynamic)" power limit mode you select the corresponding PLC tag. With this option, you can control the PLC tag limit to a user defined value.
Comment	Optional short description of load management systems, for example, about the purpose or the infeed of the load management system.

See also

Configuring a load management system (Page 132)

7.4.5 Adding an actor

You can find additional information about the possible number of actors and naming conventions in the section "Performance features and conventions (Page 125)".

Requirement

- One or more load management system with corresponding infeed object has been created.

Procedure

To create an actor for a desired load management system, follow these steps:

1. Open the S7-1500 CPU in the project tree.
2. Open the "Energy objects" folder below the S7-1500 CPU.
3. Open the "Load management" folder.
4. Double-click on the "Load management systems" object.

   The table of actors opens in the lower half of the working area.
5. Click on the desired load management system in the upper half of the working area.
6. Double-click "<Add new>" in the "Name" column in the actor table.
   You can configure the "Actor type" if the "Feedback source" is an object.

   A new actor for the desired load management system is created. The symbol show the actor type:

Symbol	Actor type
	Consumer
	Producer

If needed, create additional actors in the same way.

Copying actors

Actors can be copied between the load management systems via the shortcut menu. After copying, check the properties of the actor and adapt the copied settings as needed.

See also

Creating a load management system (Page 131)

7.4.6 Setting the properties of the actor

7.4.6.1 Configuring an actor

Each actor represents how to react to the infeed for the load management and is correspondingly configured by you. You configure an actor in the "Properties" Inspector window.

For each actor, you define:

- Select the actor type for each actor
- Set the feedback mode and feedback source
- Set the control type and control signal
- Enable of the actor for the energy program

The energy program is generated based on the configured properties.

Requirement

- An actor for a desired load management system has been created.

Procedure

To open the "Properties" Inspector window of an actor, follow these steps:

1. Open the "Energy objects" folder below the S7-1500 CPU.
2. Open the "Load management" folder.
3. Double-click on the "Load management systems" object.
4. Click on the load management system in which the desired actor has been created.

   The table of actors of the selected load management system opens in the lower half of the working area.
5. Click on the desired actor.

   All parameters of the actor are displayed in the "Properties" Inspector window. This settings for an actor in the "Properties" Inspector window is also updated within "Actors" table.

The configuration of the actor is described in detail in "General settings (Page 137)".

7.4.6.2 General settings

An actor has the following configuration parameters:

Setting	Description
Name	CPU-wide unique name of an actor. The name can be changed according to individual requirements. You can find additional information about naming conventions in the section "Performance features and conventions (Page 125)".
Actor type	Selection of the actor type. The actor type can be one of the following: • Consumer: consumes energy • Producer: provides energy You can switch the actors based on the forecast data. By default, the actor type is "Consumer".
Feedback mode	Selection of the feedback mode. The forecast block provides the feedback based on the actor's energy consumption. If the energy consumption is greater than the threshold limit, feeback is displayed. The following feedbacks are selectable: • No feedback • Status tag • Power value • Acquisition object
Feedback source	Selection of the feedback source. The forecast block displays the source based on which the feedback is generated. For a selected feedback, the following sources are selectable: • No feedback: The cell is disabled • Status tag: Supports PLC or data block tags of data type boolean only • Power value: Supports PLC or data block tags of data type Real, LReal, Int and DInt • Acquisition object: Supports acquisition objects configured in acquisition object table
Control type	Decides the state of actor control. It can be of the following types: • Binary - displays the state of switch, i.e. on/off • Analog - displays the state of power, i.e. on/off
Control signal	Assigns the respective tags based on Control type: • For Binary - Only tags of boolean data types can be selected • For Analog - Tags of type Real, LReal, Int, Dint can be selected

Setting	Description
Enable actor	Decides if the actors need be activated during energy program generation. • When this check box is selected, the actor is enabled for generating the energy program. • When the check box is not selected, the actor is not used in the energy program. If the number of Runtime licenses for the Energy Suite is fewer than the number of enabled actors, the generation of the energy program is canceled and an error alarm is displayed. Actors that are not enabled are ignored by the license count.
Comment	Optional short description of actors, for example, about the purpose or the actor type of the actor.

See also

Configuring an actor (Page 136)

7.5 Generate energy program for load management

7.5.1 Generate energy program

After configuring the load management system with its associated actors, and general settings for the energy program, generate the energy program for load management based on below mentioned sections.

You can find additional information on general settings for the energy program and runtime licenses for Energy Suite in the following sections:

- "Making general settings for the energy program (Page 71)"
- "General settings (Page 72)"
- "Runtime licenses for Energy Suite (Page 73)"

Requirement

- All load management systems which should be included are enabled for the energy program.
- The load management systems enabled for the energy program are fully configured.
- All actors which should be included are enabled for the energy program.
- The actors enabled for the energy program are fully configured.
- All the requirements from generating common Energy Suite energy programs are fulfilled.

  You can find additional information on this in the section "Generate energy program (Page 71)".

Procedure

To generate the energy program for load management, perform the following steps:

1. Open the S7-1500 CPU in the project tree.
2. Click on the "Energy objects" object below the S7-1500 CPU and select the option "Generate energy program" from the shortcut menu.

   Alternatively, you can select this option in the "Energy program settings" dialog by clicking the "Generate energy program" icon.

   The dialog with the selection for generating the energy program opens.
3. Select one of the options:
   - Energy acquisition program: generates energy program with the values configured for energy acquistion.

     For generating only an energy acquisition program see section "Generate energy program (Page 75)".
   - Complete·energy·program·(Energy·acquisition·&·Load·management): generates energy program with the values configured for energy acquistion and load management by default. If load management is not configured, energy acquisition program is only generated.
4. Click the "Generate" button.

   The generator checks the completeness and the plausibility of the configuration of the acquisition objects and starts the generation of the energy program. Information and events during the generation of the energy program are displayed in the Inspector window under "Info > Energy Suite".

5. Click "Cancel" to stop the generation.
6. You can use the "Go to" function to jump to the position in the configuration that is relevant for the respective event.
7. You can repeat the steps for generating the energy program with necessary configurations.

Result

After configuring acquisition objects, instances of the required blocks are created from the Energy Suite Library and the measurement hardware library in the "Program blocks" folder below the S7-1500 CPU. In addition, other required components, such as organization blocks and data blocks, are added to the "Program blocks" folder and the required interconnections are done.

Instances of data types from the Energy Suite Library and the measurement hardware library can be created in the "PLC data types" folder below the S7-1500 CPU.

The energy program is generated for all enabled acquisition objects (regardless of the division in the acquisition object tables).

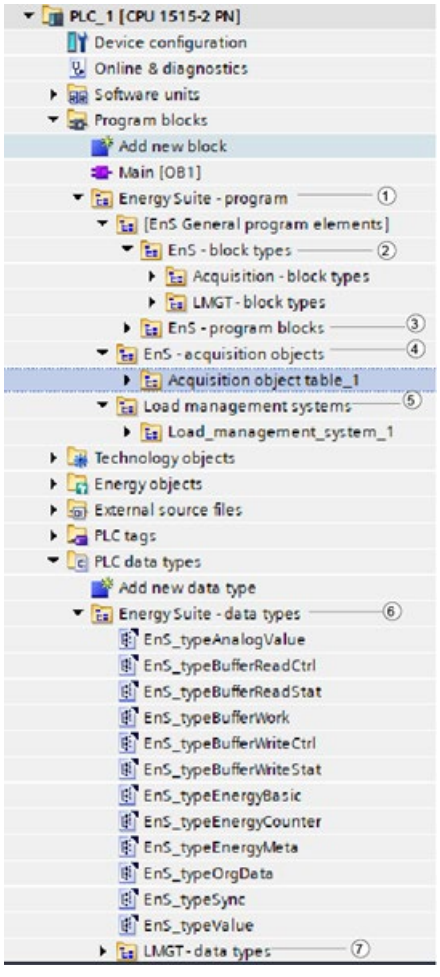

	Object	Description
①	Energy Suite - program	New folder for energy program
②	EnS - block types (Page 142)	Subfolder "Acquisition - block types" with the Energy Suite blocks and measurement hardware driver blocks (function blocks) and the forecast block for load management. Subfolder "LMGT - blocks" with additional function blocks for load management
③	EnS - program blocks (Page 145)	Folder for additional blocks (organization blocks, functions, DBs, etc.)
④	EnS - acquisition objects (Page 84)	Blocks for acquisition objects (data blocks)
⑤	LMGT - systems (Page 146)	Folder with additional functions and data blocks for load management systems and actors
⑥	Energy Suite data types (Page 147)	Folder with the Energy Suite data types and measurement hardware data types. ⑦ The sub folder "LMGT - data types" contains additional data types for load management.

Delta generation scenario

- Add - In case of delta generation, when you add new load management actors in the "Load management" table along with existing acquisition objects, and generate energy program, the new actor blocks generated will append to the existing blocks under the folder "Energy Suite - program". The related function calls will get updated accordingly.
  - During PLC runtime, only the newly added blocks will be archived along with timestamp without restarting the PLC.
- Modify - In case of delta generation, when you edit load management system or actors in the "Load management" table along with existing acquisition objects, and generate energy program, the edited Load management system actor blocks will get generated, and append to the existing blocks under the folder "Energy Suite - program". The modified parameters of load management system or actors are updated in the runtime under "Start value" column only for an instance DB. To reflect the changes from "Start value" column to "Monitor value" column in runtime, you must click " Load start values as actual values". The related function calls will get updated accordingly.
  - In PLC runtime, only the modified blocks will be initiated (In case of changing a parameter of Actor, Actor DB will get re-initialized).
  - In SCADA runtime: All screen references to the unchanged LMGT and actors will remain valid.
- Delete - In case of delta generation, when you delete load management actor in the "Load management" table along with existing acquisition objects, and generate energy program, only the selected actor blocks will be deleted, and will not affect the existsing blocks under folder "Energy Suite - program". The related function calls will get updated accordingly.
  - During PLC runtime, excluding the modified or deleted blocks, rest will be archived along with timestamp without restarting the PLC.

See also

EnS - acquisition objects (Page 144)

7.5.2 Structure of energy program

7.5.2.1 Structure of energy program

When the energy program is generated, the following folders are automatically created below the S7-1500 CPU:

- "Energy Suite - program" folder under "Program blocks" with subfolders
  - [EnS general program elements]
    - EnS - block types (Page 142)
    - EnS - program blocks (Page 145)
  - EnS - acquisition objects (Page 144)
  - LMGT - systems (Page 146)
- Folder "Energy Suite data types (Page 147)" under "PLC data types"

Note

Blocks of the energy program

SIMATIC Energy Suite automatically generates for you all the required blocks and data types and their interconnection based on the configured acquisition objects and the energy program settings.

You do not need to further adapt these blocks for the standard application with Energy Suite.

7.5.2.2 EnS - block types

The structure of your energy program depends on the following configurations:

- Energy data sources (Page 23)
- Enabled acquistion objects (Page 40)
- Energy program settings (Page 71)
- Load management settings (Page 132)
- Actor settings (Page 136)

How Energy Suite blocks work

The load management program is constructed in a modularized way, so that for each function can be decided to in-/exclude it and supply it separately.

However, a set of functions are vital for the basic functionality of the load management.

- A basic function set consists of a Forecast block, a Control block, an Actor block and the Backup/Restore block.
- For the centralized storage concept, two data blocks are included, the LmgtGeneralData DB for the general data and the ActorList DB for actor related data.

The Forecast block gets his input data from an acquisition object of an infeed, which is not part of the load management scope, but from the energy suite.

The following picture show how the Energy Suite blocks work:

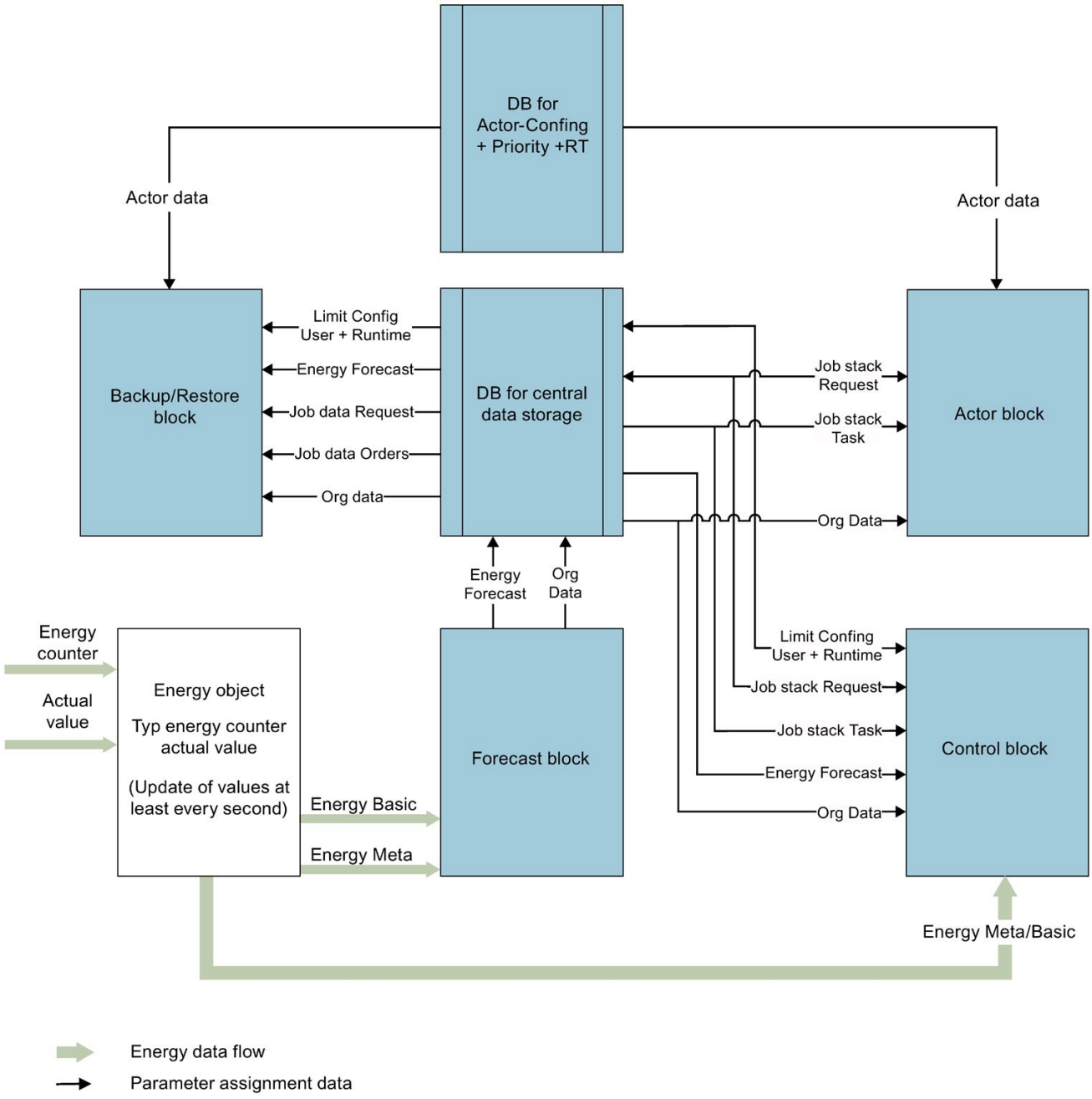

Acquisition - block types and LMGT - blocks

The "EnS - block types" folder contains the instances of all function blocks from the Energy Suite library once the general program (energy acquisition and load management) is generated. When the measurement hardware acts as the energy data source, the "Acquisition - block types" folder also contains a subfolder "EnSL - block types" with the instances of the associated Driver block from the measurement hardware library (Page 86). For load management, the folder "LMGT - blocks" contains the instances of additional available function blocks for load management.

- Function blocks for acquisition: For more information on function blocks for acquisition, see section"EnS - block types (Page 79)"
- Function blocks for load management: Table below displays the function blocks "LMGT - blocks" for load management

Function block	Description	Example in STEP 7 (TIA Portal)
EnS_LmgtForecast_x (Page 228)	Forecast functionality for infeed energy data.	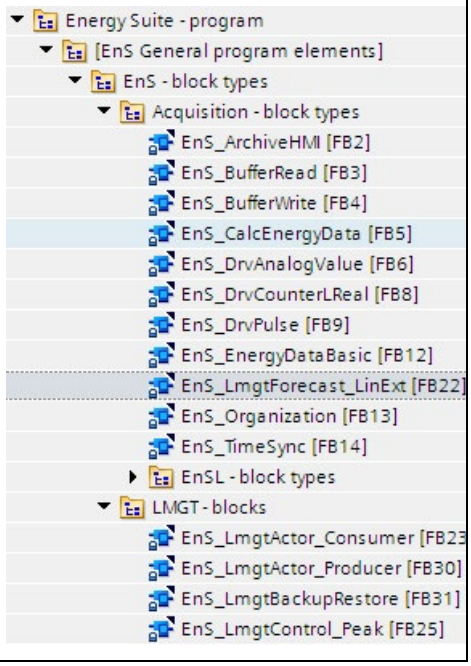
EnS_LmgtControl_Peak (Page 230)	Control logic for peak load management. Calculation and evaluation of limits. Handling job data for actors.	
EnS_LmgtActor_x (Page 237)	Feedback, status and control functionality.	
EnS_LmgtBackupRestore (Page 252)	Logging of limit violations and switching actions. Backup and restore functionality for config data.	

7.5.2.3 EnS - acquisition objects

Once the program is generated, the "EnS - acquistion objects" folder contains a subfolder with the name of the acquisition object table "<name of the acquisition object table>" for each acquisition object table with acquisition objects.

The "<name of the acquisition object>" folder contains the instance data blocks (Page 84)

- On the function blocks that are required for the acquisition objects in the energy program
- With the periodic energy values of the acquisition objects, which are provided for buffering and archiving

The data blocks for buffering the energy data are also created as instances from the Energy Suite library in this folder.

7.5.2.4 EnS - program blocks

The "EnS - program blocks" folder contains additional blocks, such as organization blocks, data blocks and functions (FCs) required for the energy program, once the program is generated.

EnS - program blocks

The "EnS - program blocks" folder contains the general blocks once the program is generated:

- General program blocks for acquisition: For more information on general program blocks for acquisition, see "EnS - program blocks (Page 81)"
- General program blocks for load management: Table below displays the general program blocks for load management

Block	Description	Example in STEP 7 (TIA Portal)
EnS_Forecast_CycInt <NNNcc>FC	An FC for the forecast blocks in the cyclic interrupt OB. "NNN" and "cc" are place holders for the duration and unit. Example: With a cycle time of 100 ms, "EnS_Forecast_CycInt100msFC" is created.	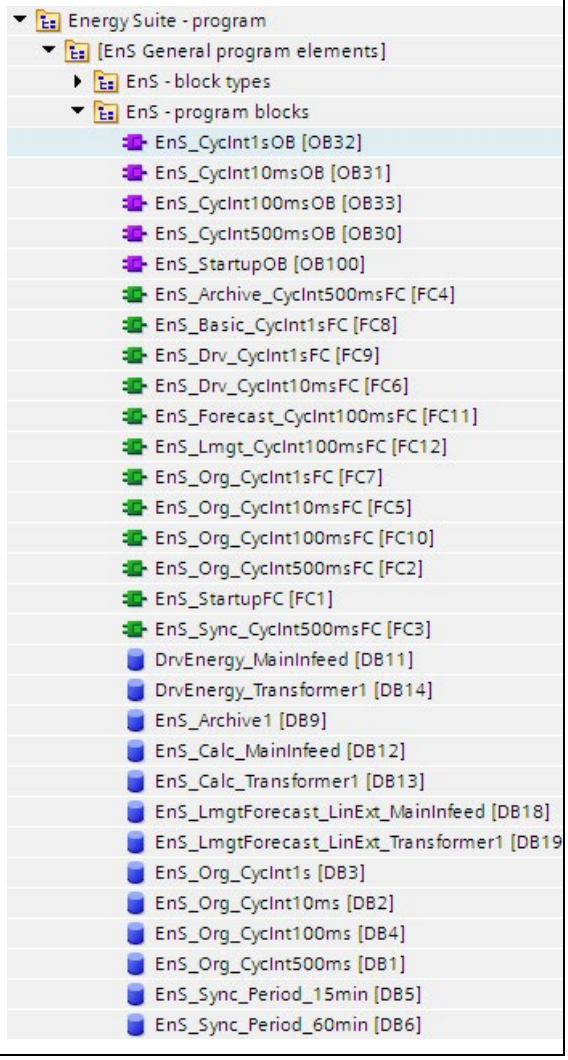
EnS_Lmgt_CycInt <NNNcc>FC	An FC for the load management blocks in the cyclic interrupt OB. "NNN" and "cc" are place holders for the duration and unit. Example: With a cycle time of 100 ms, "EnS_Lmgt_CycInt100msFC" is created.	
EnS_LmgtForecast _LinExt_<Name of the acquisition object>	Instance DB of FB "EnS_LmgtForecast_LinExt" Example: The instance DB "EnS_LmgtForecast_LinExt_Transformer1" is created by an acquisition object with the name "Transformer1".	

7.5.2.5 LMGT - systems

The "LGMT - systems" folder contains additional blocks for load management systems and actors, such as data blocks and functions (FCs) required for the load management, once the program is generated.

LMGT - systems

The "LGMT - systems" folder contains the following general blocks once the program is generated:

Block	Description	Example in STEP 7 (TIA Portal)
EnS_LmgtActor-List_<name of the load management system> (Page 259)	Data block for parameters, config data and priority list of actor. Example: EnS_LmgtActorList_Load_management_system_1 is created by an load management system with the name "Load_management_system_1".	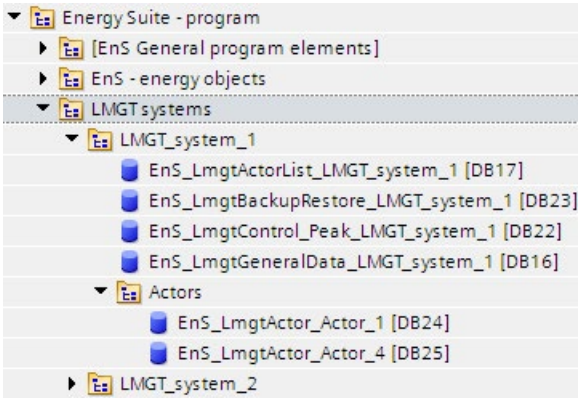
EnS_LmgtControl_Peak _<name of the load management system> (Page 230)	Data block for limit, control parameters, and time of load management. Example: EnS_LmgtControl_Peak_Load_management_system_1 is created by an load management system with the name "Load_management_system_1".	
EnS_LmgtGeneralData_ <name of the load management system> (Page 258)	Data block for parameters, status, job data and control information of load management. Example: EnS_LmgtGeneralData_Load_management_system_1 is created by an load management system with the name "Load_management_system_1".	
EnS_LmgtActor _<name of the actor>	Instance DB of FB "EnS_LmgtActor". Example: The instance DB "EnS_LmgtActor_Actor_1" is created by an actor with the name "Actor_1".	

7.5.2.6 Energy Suite data types

The Energy Suite library contains the information required data types for the energy program.

Energy Suite - data types

The "Energy Suite - data types" folder contains the instances of the data types blocks from the Energy Suite library once the program is generated:

- Data types for acquisition: For more information on the data types for acquisition, see "Energy Suite - data types (Page 85)"
- Data types for load management: Table below displays the load management data types in subfolder "LMGT - data types"

Data type	Description	Example in STEP 7 (TIA Portal)
EnS_typeActorElement (Page 260)	Data structure for one actor	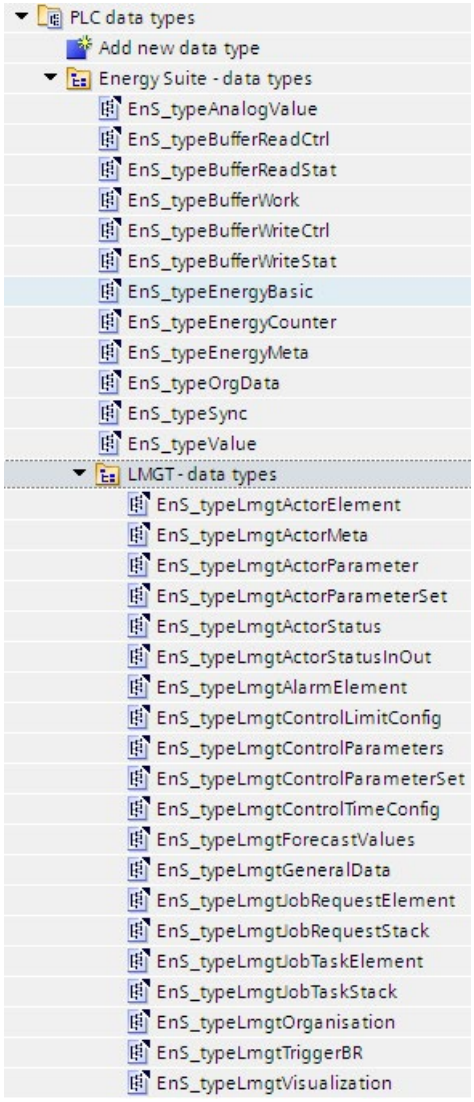
EnS_typeLmgtActorMeta (Page 261)	Actor meta data	
EnS_typeLmgtActorParameter (Page 261)	Parameters of actor	
EnS_typeLmgtActorParameterSet (Page 262)	Parameter set for one actor	
EnS_typeLmgtActorStatus (Page 263)	Status information and actual values of actor	
EnS_typeLmgtActorStatusInOut (Page 264)	Feedback and control values of actor	
EnS_typeLmgtAlarmElement (Page 265)	Data of alarms and messages	
EnS_typeLmgtControlLimitConfig (Page 265)	Limit configuration of basic LMGT functions	
EnS_typeLmgtControlParameters (Page 266)	Data of control parameters	
EnS_typeLmgtControlParameterSet (Page 266)	Set of control parameters	
EnS_typeLmgtControlTimeConfig (Page 267)	Time configuration of basic LMGT functions	
EnS_typeLmgtForecastValues (Page 267)	Forecast energy data for load management	
EnS_typeLmgtGeneralData (Page 268)	General data	
EnS_typeLmgtJobFeedbackElement (Page 269)	Job feedback data from actor	
EnS_typeLmgtJobRequestElement (Page 270)	Job request data to actors	
EnS_typeLmgtJobRequestStack (Page 271)	Data for request stack	
EnS_typeLmgtJobTaskElement (Page 271)	Task data to actors	
EnS_typeLmgtJobTaskStack (Page 272)	Data for Task stack	
EnS_typeLmgtOrganisation (Page 272)	Period related data for load management	
EnS_typeLmgtTriggerBR (Page 273)	Trigger information for backup-restore block	
EnS_typeLmgtVisualization (Page 273)	Data for visualization	

7.5.3 Configuring load management parameters with library elements

Linking of faceplate to load management parameters

To monitor the load management system, you can configure the parameters such as Infeed and actors. While you configure load management program in PLC, in the global library, templates for load management control and actor's parameter configuration are available. You can configure the load management visualization screens by manually or automatically. Automatic visualization is performed using SiVArc, for more details on automatic generation, refer SiVArc online help. The below procedure describes the manual configuration of load management visualization.

Requirement

- PLC connected to a HMI device (supported device is WinCC RT Professional)
- One or more load management system with corresponding infeed object, and actors configured, and running.
- Successful program generation

Procedure

To configure faceplates with load management parameters, perform the following:

1. After configuring the load management with Infeed, and actors, browse the global library, Energy Suite > LMGT Visualization.
   Load management templates are displayed.
2. You can drag and drop the load management template screens to "Screens" folder under the HMI device.
3. You can drag and drop the load management tag templates to the "HMI tags" folder under the HMI device.
4. To link the faceplates with the tags:
   - Open the template placed under the HMI tags folder.
   - In the PLC tag column, browse for the PLC tag that will be available along with acquisition objects after generation.
5. The faceplate is linked with the tags.
6. Download the HMI project to local by clicking the Download to device options in the tool bar.

Result

- Load management parameters in WinCC RT Professional are displayed.
- In the runtime mode to modify faceplate, click the load management parameters.

  Parameter set 1 and Parameter set 2 mode - In runtime mode, you can manually assign values to load management by switching between parameter sets by clicking "Activate parameter set 1" or

  "Activate parameter set 2". By defaut, "Parameter set 1" is active.
- The following criterions are applicable:

  1. limit tolerance start value: 0 - 999 [%]
  2. priority: 1 - 1999
  3. rolling sequence: 1 - 99

The default load management parameters are:

- LMGT state - displays the state of LMGT - enabled/disabled.
- limit tolerance start value - predicts the accuracy of forecast values
- limit tolerance duration - time duration defined for limit tolerace value
- Priority - actors are prioritized to be escalated or de-escalated
- Rolling sequence - assigned for actors with same priority
- Minimum connect time - minimum time required to connect an actor
- Maximum connect time - maximum time required to connect to an actor

---

Note

To manually switch an actor's state, `manualCommand` mode is used, and it is dependent on the operation mode `.manualcommand` by default is set to FALSE. When you change the `OperationMode` to False (which means `manualCommand` mode), then actor can be switched manually in the system. When `OperationMode` is in auto, the `manualcommand` mode will hold the actor's current state.

Back up and restore

After downloading the PLC and HMI project, the user interface is available to perform backup and restore operations.

- In the runtime mode, click "Back-up" to create a copy of the load management configuration. As soon as you click the Back up option, a back up file name as <LMGT Name >_ ConfigBackup.bin is created on the SD card of the PLC. Every time the backup operation is executed, the back up file is overriden with the latest changes.
- In the runtime mode, click "Restore" to restore the load management configuration. When you click restore, the load management configuration will be read from the latest back up file, which is stored in the SD card of the PLC.

Note

- While restore complete LMGT parameters set in general DB and Actor meta data & parameters set in actor list DB will be overwritten.
- Backup and restore block functions for PLCs with firmware versions 2.5 and above.

Log file for load management

The three different types of log files are:

- Limit violation - Upon limit violation (power demand exceeds power limit) , Lmgt_Control block triggers the log file from "EnS_LmgtGeneralData" and "EnS_ActorList". A log file of type "<LMGTName>_LimitViol_xxx.bin" is created. When the maximum file size is reached, a new file will be created with incremented file number xxx. The data is read and written to the SD card of the PLC.
- Switching action - When switching action is performed by the load management actors, data from "EnS_LmgtGeneralData" and EnS_ActorList" is read and written to the SD card of the PLC. A log file of type " "<LMGTName>SwitchEvnt_xxx.bin"is created
- Lack of actors - When control block wants to perform an escalation of job, and no actors are available. A log file of type " "<LMGTName>_LackActors_xxx.bin" is created.

Note

For multiple files, xxx is a consecutive number defined by the input parameter "amountLogFiles" in the PLC.

The log file consists of all the DB parameters of load management system and actor gloabal DB. The log file contains the information such as name of the load management system, Date and time of the limit violation or actors (includes local and UTC time), power limit, current power, average power forecast or average power (at the end of an period) and so on.

Energy Suite blocks - Acquisition

A

A.1 Overview of Energy Suite blocks for acquisition

Note

Description of Energy Suite blocks for experts

You can find a detailed description about how each block operates and its block parameters in the following sections.

You do not need this information for the standard application with Energy Suite.
SIMATIC Energy Suite automatically generates for you all the required blocks and their interconnection based on the configured acquistion objects and the energy program settings.

CAUTION

Manual change to blocks of the energy program

If you make manual changes to the blocks and their interconnection after generating the energy program, you yourself are responsible for the error-free operation of the devices and the energy program.

CAUTION

Using Energy Suite blocks in other PLC programs

If you use the Energy Suite blocks from the global library in other PLC programs, you yourself are responsible for error-free use of Energy Suite blocks.

This section provides an overview of all available Energy Suite blocks. Following the installation of SIMATIC Energy Suite, the blocks can be seen under "Global Libraries" in STEP 7 (TIA Portal):

- Function blocks (Page 156)
- Data blocks (Page 206)
- Data types (Page 208) including enumerations (Page 223)

How Energy Suite blocks work

The following shows how the Energy Suite blocks generally work in the energy program for energy data from the process image of the CPU (PLC tags) or from data blocks (DB tags).

The placeholder "xxx" in the picture means that there are different types of this block, for example, for "EnS_Drvxxx":

- EnS_DrvPulse
- EnS_DrvCounterLInt

You can find more types in the "Function Blocks" table after the picture below.

The following picture show how the Energy Suite blocks work:

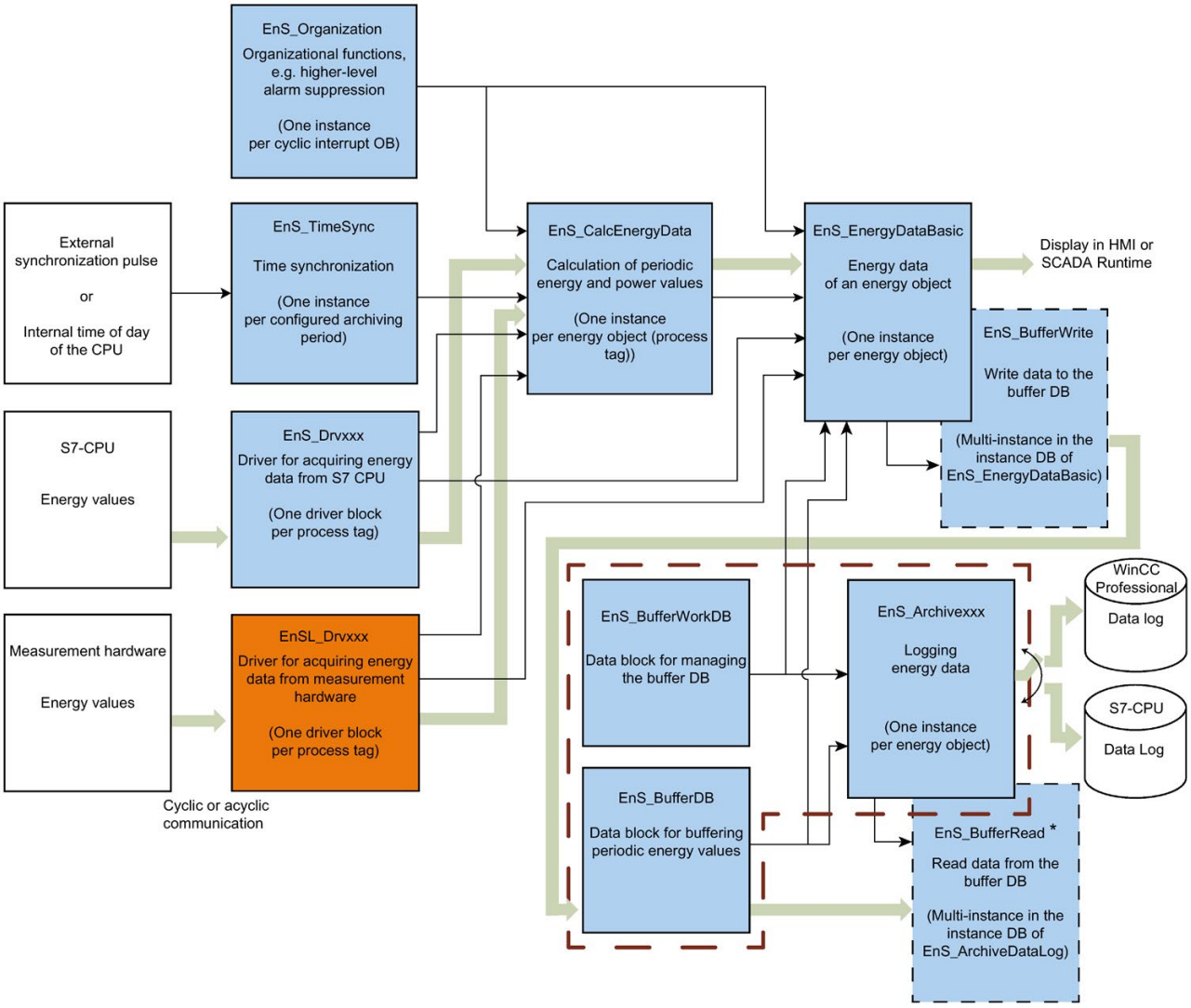

* EnS_BufferRead is not called for archiving in WinCC Professional

Energy data flow

Parameter assignment data

Blocks used internally

Blocks associated with an energy acquisition table

Function blocks

Name	Function
EnS_ArchiveDataLog (Page 156)	Archived energy data in data logs (CSV file on the SIMATIC memory card of the CPU)
EnS_ArchiveHMI (Page 166)	Archived energy data in data logs of WinCC Professional
EnS_BufferRead (Page 174)	Reads the data from the buffer DB (EnS_BufferDB (Page 206)). Used internally
EnS_BufferWrite (Page 176)	Writes data to the buffer DB (EnS_BufferDB (Page 206)). Used internally
EnS_CalcEnergyData (Page 179)	Periodic calculation of the consumed energy and average power consumption
EnS_DrvAnalogValue (Page 185)	Driver block for analog input (e.g. power value, flow value)
EnS_DrvCounterLInt (Page 187)	Driver block for counter values of the LINT type
EnS_DrvCounterLReal (Page 189)	Driver block for counter values of the LREAL type
EnS_DrvPulse (Page 191)	Driver block for a pulse input
EnS_EnergyDataAdv (Page 193)	Advanced energy data from a device (for example, phase-specific current and voltage values)
EnS_EnergyDataAdvMinMax (Page 194)	Minimum and maximum values of the advanced energy data of a device
EnS_EnergyDataBasic (Page 195)	Basic energy data from a device (for example, power, energy counter value)
EnS_Organization (Page 199)	Contains general data and parameters for central program organization
EnS_TimeSync (Page 200)	Synchronizes the times for calculating the energy data

Data blocks

Name	Function
EnS_BufferDB (Page 206) *	Data block for buffering of energy data records
EnS_BufferWorkDB (Page 207) *	Data block for monitoring and status information of the buffer

* The name can be changed.

User-defined data types

Name	Function	Used by
EnS_typeAnalogValue (Page 208)	Data type for analog process values	EnS_CalcEnergyData EnS_DrvAnalogValue
EnS_typeBufferReadCtrl (Page 208)	Data type for control information of the buffer for reading data	EnS_BufferRead EnS_typeBufferWork
EnS_typeBufferReadStat (Page 209)	Data type for data and status information of the buffer for reading data	EnS_typeBufferWork
EnS_typeBufferWork (Page 210)	Data type for monitoring and status information of the buffer	EnS_BufferRead EnS_BufferWrite EnS_ArchiveDataLog EnS_EnergyDataBasic EnS_BufferWorkDB EnS_ArchiveHMI
EnS_typeBufferWriteCtrl (Page 211)	Data type for control information of the buffer for writing data	EnS_BufferWrite EnS_typeBufferWork
EnS_typeBufferWriteStat (Page 211)	Data type for status information of the buffer for writing data	EnS_typeBufferWork
EnS_typeEnergyAdv (Page 212)	Data type for advanced energy data	EnS_EnergyDataAdv
EnS_typeEnergyBasic (Page 214)	Data type for basic energy data	EnS_CalcEnergyData EnS_EnergyDataBasic
EnS_typeEnergyCounter (Page 215)	Data type for energy count value	EnS_CalcEnergyData EnS_DrvCounterLInt EnS_DrvCounterLReal EnS_DrvPulse
EnS_typeEnergyMeta (Page 216)	Data type for metadata of the measuring point (information for configuration of the acquistion object)	EnS_CalcEnergyData EnS_BufferWrite EnS_DrvAnalogValue EnS_DrvCounterLInt EnS_DrvCounterLReal EnS_DrvPulse EnS_EnergyDataAdv EnS_EnergyDataBasic
EnS_typeHMIWriteCtrl (Page 219)	Data type for control information of the buffer for writing energy data to the data log of WinCC Professional	EnS_ArchiveHMI
EnS_typeHMIWriteStat (Page 220)	Data type for status information of the buffer for writing energy data to the data log of WinCC Professional	EnS_ArchiveHMI

Name	Function	Used by
EnS_typeOrgData (Page 221)	Data type for organization data	EnS_Organization EnS_TimeSync EnS_DrvAnalogValue EnS_DrvCounterLInt EnS_DrvCounterLReal EnS_DrvPulse EnS_ArchiveDataLog EnS_EnergyDataAdv EnS_EnergyDataBasic EnS_ArchiveHMI
EnS_typeSync (Page 221)	Data type for time synchronization	EnS_TimeSync EnS_CalcEnergyData
EnS_typeValue (Page 222)	Data type for output values	EnS_BufferDB EnS_BufferRead EnS_ArchiveDataLog

A.2 Function blocks (FBs)

A.2.1 EnS_ArchiveDataLog: Write energy values to data logs

A.2.1.1 Description of EnS_ArchiveDataLog

Description

The "EnS_ArchiveDataLog" function block writes periodic energy data from the data block for buffering to buffer EnS_BufferDB (Page 206)" ("bufferDB" parameter) in "Data Logs to the SIMATIC memory card of the CPU. Writing is performed only if the "archiveEnergy", "archivePower", "archiveEnergyCounter" parameters have been set to "TRUE" in the corresponding metadata (Page 216). The data are stored as a CSV file on the SIMATIC memory card.

To avoid access conflicts on the SIMATIC memory card of the CPU, use only one instance of the function block per CPU.

The following table shows the structure of a CSV file.

Column	Name	Description
1	SeqNo	Sequential number (specified by the system)
2	Tagname	Tag name
3	Value	Archived value
4	TimeStamp	Time stamp of the archived value
5	Status	Status of the archived value

The name of the archived data is composed of <DataLogName>+<YYYYMMDD_hhmm (time stamp of the creation time stamp in UTC format)>

Example: DataLog_20141117_2315

The size of the data log is limited by the system to 1 GB. The number of data records must be set accordingly at the "noRecords" parameter (see the following calculation example).

Example: The space required on the memory card for a data log is calculated using the following formula: 45 bytes + (number of data records * 116 bytes).

The number of data logs is defined by the "noDataLogs" parameter. The capacity of the memory card limits the number of available data logs (valid number: 1 - 100).

Writing data logs

The archiving of energy data is performed when the buffer DB contains new data (bufferWork.noItems > 0). The function block then reads the new data with the "EnS_BufferRead (Page 174)" function block and writes it to the data log.

Note

The writing speed may vary depending on the CPU used, the employed memory card and the location of the data on the memory card. The number of cycles that are required to write an energy data record varies. No more than 1 data record can be written per cycle.

Number of data logs

If a data log is full, the "full" output is set for one cycle and a alarm is generated.

When the maximum number of data logs ("noDataLogs", valid number: 2-10) has been reached and the last data log is full, the oldest data log is deleted and a new data log is created. A message is generated when a data log is deleted or a new one is created. You can view the alarm on a SCADA system, for example.

Startup

The block has no startup characteristics.

Reaction to error

When an error occurs, the output parameter "error" is set. The "Status (Page 160)" parameter contains additional error information. The error information of the lower-level function block "EnS_BufferRead (Page 174)" is added to the "status" parameter. The error information is displayed in the "status" parameter until the error is cleared. Only then is the information about the next pending error displayed.

A.2.1.2 Parameters of EnS_ArchiveDataLog

The following table shows the function block "EnS_ArchiveDataLog":

Parameter	Declaration	Data type	Default	Description	R *
dataLogName	Input	STRING[32]	-	Name of the data log	-
noRecords	Input	UDINT	10000	Number of data records in the data log	-
noDataLogs	Input	UINT	5	Number of data logs	-
bufferDB	Input	DB_ANY	-	Pointer to buffer data block	-
sD	Input	VARIANT	-	Associated value for alarm messages	-
messageSuppress	Input	BOOL	FALSE	TRUE = Alarm suppression activated	-
full	Output	BOOL	FALSE	TRUE = Data log is full	-
busy	Output	BOOL	FALSE	TRUE = Processing is active	-
done	Output	BOOL	FALSE	TRUE = Data successfully processed	-
error	Output	BOOL	FALSE	TRUE = Error	-
status	Output	WORD	-	Error status information (Page 160)	-
statusCreateFct	Output	WORD	-	Error status information of the DataLogCreate instruction	-
statusOpenFct	Output	WORD	-	Error status information of the DataLogOpen instruction	-
statusWriteFct	Output	WORD	-	Error status information of the DataLogWrite instruction	-
statusDeleteFct	Output	WORD	-	Error status information of the DataLogDelete instruction	-
statusCloseFct	Output	WORD	-	Error status information of the DataLogClose instruction	-
dataLogNameAct	Output	STRING[48]	-	Name of the active data log	-
dataLogNameLast	Output	STRING[48]	-	Name of the last data log	-
dataLogNameDel	Output	STRING[48]	-	Name of the deleted data log	-
errorAlarm1	Output	BOOL	FALSE	TRUE = Error Program_Alarm1	-
statusAlarm1	Output	WORD	-	Error status information Program_Alarm1	-
alarmState1	Output	BYTE	-	Alarm status of Program_Alarm1	-
errorAlarm2	Output	BOOL	FALSE	TRUE = Error Program_Alarm2	-
statusAlarm2	Output	WORD	-	Error status information Program_Alarm2	-
alarmState2	Output	BYTE	-	Alarm status of Program_Alarm2	-
errorAlarm3	Output	BOOL	FALSE	TRUE = Error Program_Alarm3	-
statusAlarm3	Output	WORD	-	Error status information Program_Alarm3	-
alarmState3	Output	BYTE	-	Alarm status of Program_Alarm3	-
errorAlarm4	Output	BOOL	FALSE	TRUE = Error Program_Alarm4	-
statusAlarm4	Output	WORD	-	Error status information Program_Alarm4	-
alarmState4	Output	BYTE	-	Alarm status of Program_Alarm4	-
errorAlarm5	Output	BOOL	FALSE	TRUE = Error Program_Alarm5	-

Parameter	Declaration	Data type	Default	Description	R *
statusAlarm5	Output	WORD	-	Error status information Program_Alarm5	-
alarmState5	Output	BYTE	-	Alarm status of Program_Alarm5	-
errorAlarm6	Output	BOOL	FALSE	TRUE = Error Program_Alarm6	-
statusAlarm6	Output	WORD	-	Error status information Program_Alarm6	-
alarmState6	Output	BYTE	-	Alarm status of Program_Alarm6	-
id	InOut	DWORD	0	ID of the current data log	X
orgData	InOut	EnS_typeOrgData (Page 221)	-	Organization data	-
bufferWork	InOut	EnS_typeBufferWork (Page 210)	-	Buffer monitoring and status information	-

* The marked parameters are given the "Retain" system attribute and are stored in the retentive memory area of the CPU.

A.2.1.3 Parameter status

The following table shows the error codes that are generated at the "status" output parameter of the "EnS_ArchiveDataLog" function block when errors occur:

Error code (W#16#...)	Description	Error type	Copied to parameter	Solution
8511	Error reading from buffer	Archiving error	bufferWork .readStat .statusReadFct	The reading continues until it is successful. Cause of error: Wrong data block is connected or no data block is present. Procedure: Correct the program.
8601	Error creating data log	Error creating	statusCreateFct	The errors of the "DataLogCreate" SFC are copied to the "statusCreateFct" parameter. The creation is repeated until it is successful. Causes of error: • Name of the data log is invalid • No memory space Procedure: • Assign a valid name to the Data Log. • You can find additional information about valid names in the section "Archiving and buffering (S7-CPU) (Page 62)". • Adapt the storage capacity of the SIMATIC Memory Card used. • Release the lock on the used SIMATIC Memory Card.
8602	Error opening data log	Error opening	statusOpenFct	Opening the data log is repeated until it is successful. Causes of error: • Data Log is not available • Data Log is already open Procedure: • Close the data log before opening. • Ensure that the Data Log has already been created. • Release the lock on the used SMATIC Memory Card.

Error code (W#16#...)	Description	Error type	Copied to parameter	Solution
8603	Error writing data log	Error writing	statusWriteFct	Writing to the data log is repeated until it is successful. Causes of error: • Data Log is not available • No memory space Procedure: • Ensure that the Data Log has already been created. • Release the lock on the SIMATIC Memory Card used.
8604	Error deleting data log	Error deleting	statusDeleteFct	The Data Log file is not deleted Causes of error: • Data Log is not available • Data Log is write protected • No memory space Procedure: • Close the data log file. • Adapt the storage capacity of the SIMATIC Memory Card used. • Release the lock on the used SIMATIC Memory Card.
8605	Error closing data log	Error during closing	statusCloseFct	Closing the data log is repeated until it is successful. Causes of error: • Data Log is not available • Data Log is already closed Procedure: • Open the Data Log before closing. • Ensure that the Data Log has already been created. • Release the lock on the SIMATIC Memory Card used.

Error code (W#16#...)	Description	Error type	Copied to parameter	Solution
8611	Maximum number of data records too high	Parameter assignment error	noRecords	The size of the data log is limited by the system to 1 GB. The capacity of the SIMATIC Memory Card limits the number of available data logs. Causes of error: • The maximum number of data records is exceeded. Procedure: • Adapt the storage capacity of the SIMATIC memory card used (for example, by deleting the old data logs).
8612	Number of data logs invalid (<2 or >10)	Parameter assignment error	noDataLogs	The number of data logs corresponds to the "Number of data logs" setting in the "Archiving" area for the "PLC (SIMATIC Memory Card)" archiving type. Causes of error: • The number of data logs is out of range. Procedure: • Specify a valid number of data logs under "CPU > Acquistion Objects > Energy Program Settings > Archiving and buffering > Number of data logs".

The additional alarm texts ("Description" column) are written in the "EnS_Alarms" text list of the "Program_Alarm2" alarm block and are output with the error codes in the alarm.

See also

Description of EnS_BufferRead (Page 174)

A.2.1.4 Alarms of EnS_ArchiveDataLog

The alarms are generated with the instruction "Program_Alarm" A multi-instance of the "Program_Alarm" data type is created under the "Static" tag of the "EnS_ArchiveDataLog" function block for each alarm. You can find additional information on "Program_Alarm" in the online help of the TIA Portal information system under "Extended instructions > Alarms".

The following table shows the alarms generated by the "EnS_ArchiveDataLog" function block:

Alarm block	Alarm text	Alarm class
Program_Alarm1	Parameter assignment error	With acknowl-edgment
Program_Alarm2	Logging error: <text list: EnS_Alarms:#status>	With acknowl-edgment
Program_Alarm3	Energy log full: <Tag:#dataLogNameLast >	With acknowl-edgment
Program_Alarm4	Create energy Log: <Tag:#dataLogNameAct >	With acknowl-edgment
Program_Alarm5	Delete energy log: <Tag:#datalogNameDel >	With acknowl-edgment
Program_Alarm6	Data loss of <Tag:#bufferWork.noDeletedItems" data rec-ords*	With acknowl-edgment

* The "bufferWork.noDeletedItems" parameter contains the number of records that will be overwritten with a buffer overflow.

The additional alarm texts for "Program_Alarm2" are described in the "EnS_Alarms" text list. The error codes (status) are output in the alarm text and contain additional alarm text of the respective error codes.

The following table shows the error codes with additional alarm texts of the "Program_Alarm2" alarm blocks:

Alarm block	Error code (W#16#...)	Alarm text	Parameter	Function block
Program_Alarm2	8511	Error reading from buffer	status	EnS_BufferRead (Page 174)
	8601	Error creating data log		EnS_ArchiveData Log
	8602	Error opening data log		
	8603	Error writing data log		
	8604	Error deleting data log		
	8605	Error closing data log		

The associated values for the alarms are assigned as follows:

Alarm block	Associated value	Parameter	Description
Program_Alarm1	1	sD	Free
	2	-	Not used
	3	-	Not used
	4	-	Not used
	5	-	Not used
	6	-	Not used
	7	-	Not used
	8	-	Not used
	9	-	Not used
	10	-	Not used
Program_Alarm2	1	status	Error status information
	2	sD	Free
	3	-	Not used
	4	-	Not used
	5	-	Not used
	6	-	Not used
	7	-	Not used
	8	-	Not used
	9	-	Not used
	10	-	Not used
Program_Alarm3	1	dataLogNameLast	Name of the full data log
	2	sD	Free
	3	-	Not used
	4	-	Not used
	5	-	Not used
	6	-	Not used
	7	-	Not used
	8	-	Not used
	9	-	Not used
	10	-	Not used

Alarm block	Associated value	Parameter	Description
Program_Alarm4	1	dataLogNameAct	Name of the generated data log
	2	sD	Free
	3	-	Not used
	4	-	Not used
	5	-	Not used
	6	-	Not used
	7	-	Not used
	8	-	Not used
	9	-	Not used
	10	-	Not used
Program_Alarm5	1	dataLogNameDel	Name of the deleted data log
	2	sD	Free
	3	-	Not used
	4	-	Not used
	5	-	Not used
	6	-	Not used
	7	-	Not used
	8	-	Not used
	9	-	Not used
	10	-	Not used
Program_Alarm6	1	bufferWork .noDeletedItems	Number of deleted data records on buffer overflow
	2	sD	Free
	3	-	Not used
	4	-	Not used
	5	-	Not used
	6	-	Not used
	7	-	Not used
	8	-	Not used
	9	-	Not used
	10	-	Not used

The alarms can be changed.

The "SD" input parameter is used as an associated value. You can connect the parameters with additional information that is displayed in the alarm.

The alarms can be suppressed with "messageSuppress" or overridden with "orgData.messageSuppress" of the function block "EnS_Organization (Page 199)".

A.2.2 EnS_ArchiveHMI: Write energy values to data logs

A.2.2.1 Description of EnS_ArchiveHMI

Description

The "EnS_ArchiveHMI" function block (FB) periodic writes energy data from the data block (DB) for buffering "EnS_BufferDB (Page 206)" to the data log of WinCC Professional. To do this, the "EnS_ArchiveHMI" FB cyclically requests the DB for buffering "EnS_BufferDB" for available data records with energy data. For existing data records, the "EnS_ArchiveHMI" function block (FB) sends a request to the Energy Suite WinCC Professional component to retrieve the energy data from the DB for buffering and write to the data log.

Writing the data logs

The archiving of energy data to data logs is only performed when the following requirements are met:

- The DB for buffering contains new data records (bufferWork.noItems > 0).
- The DB is available for buffering (bufferWork.busy = FALSE).
- The HMI connection to WinCC Professional has been established.

If the requirements are met, the reading of data from the DB is activated for buffering. The "EnS_ArchiveHMI" FB sends a request to transfer data to WinCC Professional. The request at the "request" parameter with the "EnS_typeHMIWriteCtrl (Page 219)" data type contains read and write pointers, and the number of data records to be archived.

Then the Energy Suite WinCC Professional component reads the data from the DB for buffering and writes it into the data log. The "statusWrite" parameter of the "EnS_typeHMIWriteStat (Page 220)" data type contains the number of written data records and the updated read pointer. During the writing process, the WinCC Professional component, Energy Suite, updates the number of written data records and the write pointer after every written data record.

Note

Individual instances of "EnS_BufferWrite (Page 176)", "EnS_BufferRead (Page 174)" or WinCC script can access the data block for buffering. Only read access to the data block is possible at the same time.
The buffer control and status information of the global DB "EnS_BufferWorkDB (Page 207)" are provided at the "bufferWork" parameter.

Watchdog

The connection between the CPU and WinCC Professional is monitored using the watchdog counter. The "EnS_ArchiveHMI" FB sets the watchdog counter at the "request.watchdog" parameter. The content of the "request.watchdog" parameter is copied to the "statusWrite.watchdog" parameter.

- If the WinCC Professional component, Energy Suite, acknowledges the time monitoring, the "EnS_ArchiveHMI" FB increments the watchdog counter.
- If no acknowledgment is made within the monitoring time, the error code "16#8606" is output at the "status" parameter. In addition, an active request is reset and no further request is sent to the watchdog until the error is eliminated.
  An alarm with information about the data loss is generated once the error is eliminated.

Startup

The block has no startup characteristics.

Reaction to error

When an error occurs, the output parameter "error" is set. The "Status (Page 170)" parameter contains additional error information.

If the WinCC Professional component, Energy Suite, does not respond to the request of the "EnS_ArchiveHMI" FB during the monitoring period and no watchdog error occurs, the error code "16#8605" is output at the "status (Page 170)" parameter. Once the waiting period has expired and the request has been successfully fulfilled by the Energy Suite, WinCC Professional, the request is sent again.

A.2.2.2 WinCC Professional component

Description

The Energy Suite WinCC Professional component writes energy data to the data log of WinCC Professional.

Alarms

If errors occur, the WinCC Professional component generates system events in WinCC Professional.

The following table shows the alarms:

Alarm text	Alarm class
Archiving error <text list: EnS_Alarms:#status>	System
Archiving continues	System
Possible data loss	System

Reaction to error

If an error occurs, the error code is output with the additional alarm text in the system event by WinCC Professional. The additional alarm text is displayed in the following table under "Description".

Furthermore, the error codes with additional alarm texts at the "statusWrite.status"/"statusHMI" parameters of the instance DB of the "EnS_ArchiveHMI" function block are output to the CPU.

The following table shows the error codes of the WinCC Professional component:

Error code (W#16#...)	Description	Error type	Copied to parameter
8621	Connection interrupted	Time monitoring error	statusWrite.status
8622	Access to the data log denied	Error writing	statusWrite.status
8623	Writing of the energy data to the data log canceled	Error writing	statusWrite.status
8624	Possible data loss	Data error	statusWrite.status
8625	Access to the data block for buffering interrupted	Data error	statusWrite.status
8631	Tag not configured	Parameter assignment error	statusWrite.status

A.2.2.3 Parameters of EnS_ArchiveHMI

The following table shows the function block "EnS_ArchiveHMI":

Parameter	Declaration	Data type	Default	Description	HMI *
statusWrite	Input	EnS_typeHMIWriteStat (Page 220)	-	Status information for writing the energy values to the data log	-
monitoringTime	Input	TIME	T#5s	Monitoring time for writing the energy values to the data log	-
monitoring-TimeWatchdog	Input	TIME	T#10s	Monitoring time for watchdog	-
waitTime	Input	TIME	T#1m	Waiting time for repeating the request to write the energy data to the data log	-
bufferDB	Input	DB_ANY	-	Pointer to data block for buffering	-
sD	Input	VARIANT	-	Associated value for alarms	-
messageSup-press	Input	BOOL	FALSE	TRUE = Alarm suppression activated	-
request	Output	EnS_typeHMIWriteCtrl (Page 219)	-	Request for writing the energy data to data log	X
busy	Output	BOOL	FALSE	TRUE = Writing the energy data to data log is enabled	-
done	Output	BOOL	FALSE	TRUE = Writing the energy data to data log was successful	-
error	Output	BOOL	FALSE	TRUE = Error	-
status	Output	WORD	-	Error status information (Page 170)	-
statusHMI	Output	WORD	-	Error status information	-
errorAlarm1	Output	BOOL	FALSE	TRUE = Error "Program_Alarm1"	-
statusAlarm1	Output	WORD	-	Error status information of "Program_Alarm1"	-
alarmState1	Output	BYTE	-	Alarm status of "Program_Alarm1"	-
errorAlarm2	Output	BOOL	FALSE	TRUE = Error "Program_Alarm2"	-
statusAlarm2	Output	WORD	-	Error status information of "Program_Alarm2"	-
alarmState2	Output	BYTE	-	Alarm status of "Program_Alarm2"	-
errorAlarm3	Output	BOOL	FALSE	TRUE = Error "Program_Alarm3"	-
statusAlarm3	Output	WORD	-	Error status information of "Program_Alarm3"	-
alarmState3	Output	BYTE	-	Alarm status of "Program_Alarm3"	-
orgData	Output	EnS_typeOrgData (Page 221)	-	Organizational data	-
bufferWork	Output	EnS_typeBufferWork (Page 210)	-	buffer control and status information	-

A.2.2.4 Parameter status

The following table shows the error codes that are generated at the "status" output parameter when errors occur:

Error code (W#16#...)	Description	Error type	Copied to parameter	Solution
8603	Error writing energy data to the data log	Error writing	statusHMI	Internal error **Causes of error:** • HMI connection to the S7-CPU has closed • Data Log is not available • Name of the data log is invalid **Procedure:** • No action needs to be taken when an internal error occurs.
8606	Timeout writing the energy data to the data log	Error writing	statusWrite.busy / statusWrite.done / statusWrite-error	The period within which the energy data from the S7 CPU are transferred to the data log has expired. **Causes of error:** • Energy Suite SCADA component does not respond to the request to write the energy data within the monitoring time. • HMI connection to the S7-CPU has closed • Data loss
8607	Watchdog error	Error writing	statusWrite.error	Internal error **Causes of error**: The Energy Suite SCADA component was not acknowledged within the monitoring time. **Procedure:** • No action needs to be taken when an internal error occurs.
8611	Monitoring time < 0 or > 1 hour	Parameter assignment error	monitoringTime	Internal error **Causes of error:** • Monitoring time is invalid • Watchdog error has not occurred **Procedure:** • No action needs to be taken when an internal error occurs.

Error code (W#16#...)	Description	Error type	Copied to parameter	Solution
8612	Monitoring time for watchdog < 0 or > 1 hour	Parameter assignment error	monitoringTime-Watchdog	Internal error **Causes of error:** • The monitoring time for Watchdog is invalid **Procedure:** • No action needs to be taken when an internal error occurs.
8613	Wait time < 0 or > 1 hour	Parameter assignment error	waitTime	Internal error **Causes of error:** • Waiting time for repeating the request to write the energy data to the data log is invalid **Procedure:** • No action needs to be taken when an internal error occurs.

The additional alarm texts ("Description" column) are written in the "EnS_Alarms" text list of the "Program_Alarm2" alarm block and are output with the error codes in the alarm.

A.2.2.5 Alarms of EnS_ArchiveHMI

The alarms are generated with the instruction "Program_Alarm" A multi-instance of the "Program_Alarm" data type is created under the "Static" tag of the "EnS_ArchiveHMI" function block for each alarm. You can find additional information on "Program_Alarm" in the online help of the TIA Portal information system under "Extended instructions > Alarms".

The following table shows the alarms of the "EnS_ArchiveHMI" function block:

Alarm block	Alarm text	Alarm class
Program_Alarm1	Parameter assignment error	With acknowl-edgment
Program_Alarm2	Archiving error <text list: EnS_Alarms:#status>	With acknowl-edgment
Program_Alarm3	Data loss of <Tag:#bufferWork.noDeletedItems" data rec-ords *	With acknowl-edgment

* The "bufferWork.noDeletedItems" parameter contains the number of records that have been overwritten during the buffer overflow. The data block for buffering is emptied (bufferWork.noItems = 0) for each buffer overflow.

The additional alarm texts of the "Program_Alarm2" alarm block are written in the "EnS_Alarms" text list. The error codes (status) are output in the alarm text and contain additional alarm text of the respective error codes.

The following table shows the error codes with additional alarm texts of the "Program_Alarm2" alarm blocks:

Alarm block	Error code (W#16#...)*	Alarm text	Parameter	Function block
Program_Alarm2	8606	Timeout writing the energy data to the data log	status	EnS_ArchiveHMI
	8607	Connection to the data log lost		EnS_ArchiveHMI

* The error code in the program editor can be displayed as integer or hexadecimal value. You can find additional information about switching the display format in the online help of the TIA Portal information system under "Changing display formats in the program status".

The following table shows the alarm blocks with assigned associated values:

Alarm block	Associated value	Parameter	Description
Program_Alarm1	1	sD	Free
	2	-	Not used
	3	-	Not used
	4	-	Not used
	5	-	Not used
	6	-	Not used
	7	-	Not used
	8	-	Not used
	9	-	Not used
	10	-	Not used

Alarm block	Associated value	Parameter	Description
Program_Alarm2	1	status	Error status information
	2	sD	Free
	3	-	Not used
	4	-	Not used
	5	-	Not used
	6	-	Not used
	7	-	Not used
	8	-	Not used
	9	-	Not used
	10	-	Not used
Program_Alarm3	1	bufferWork .noDeletedItems	Number of data records overwritten by a buffer overflow
	2	sD	Not used
	3	-	Not used
	4	-	Not used
	5	-	Not used
	6	-	Not used
	7	-	Not used
	8	-	Not used
	9	-	Not used
	10	-	Not used

The alarms can be changed.

The "sD" input parameter as an associated value. You can connect the parameters with additional information that is displayed in the alarm.

The alarms can be suppressed with "messageSuppress" or overridden with "orgData.messageSuppress" of the function block "EnS_Organization (Page 199)".

A.2.3 EnS_BufferRead: Reading energy values from data blocks

A.2.3.1 Description of EnS_BufferRead

Description

The "EnS_BufferRead" function block reads data from the "EnS_BufferDB (Page 206)" data block.

The "EnS_BufferRead" function block is called internally by the "EnS_ArchiveDataLog (Page 156)" function block.

The following picture show the circuitry of the parameter:

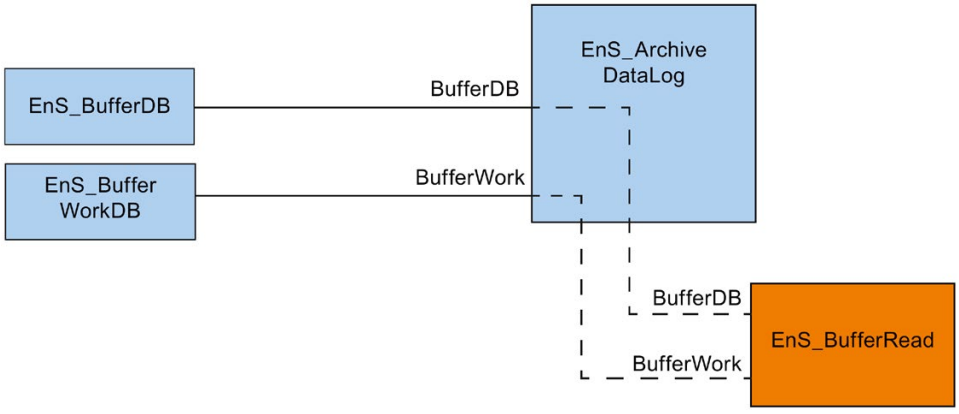

Startup

The block has no startup characteristics.

Reaction to error

When an error occurs, the output parameter "error" is set. The "Status (Page 175)" parameter contains additional error information.

Alarms

The block has no signaling characteristics. Alarms are created by calling function block.

See also

EnS_BufferWorkDB (Page 207)

A.2.3.2 Parameters of EnS_BufferRead

The following table shows the function block "EnS_BufferRead":

Parameter	Declaration	Data type	Default	Description
bufferDB	Input	DB_ANY	-	Reference to the data block for buffering
data	Output	EnS_typeValue (Page 222)	-	Read data from the buffer
busy	Output	BOOL	FALSE	TRUE = Processing is active
done	Output	BOOL	FALSE	TRUE = Data successfully processed
error	Output	BOOL	FALSE	TRUE = Error
status	Output	WORD	-	Error status information (Page 175)
bufferWork	InOut	EnS_typeBufferWork (Page 210)	-	Buffer monitoring and status information
request	InOut	EnS_typeBufferReadCtrl (Page 208)	-	Buffer monitoring information

A.2.3.3 Parameter status

The following table shows the error codes that are generated at the "status" output parameter when errors occur:

Error code (W#16#...)	Description	Error type	Copied to parameter	Solution
8511	Error reading from buffer	Error reading	bufferWork .readStat.status ReadFct	The reading continues until it is successful. Causes of error: • Wrong data block is connected or no data block is present. Procedure: • Correct the program.
8512	Data loss *		bufferWork .noDeletedItems	Causes of error: • Data loss after buffer overflow A buffer overflow occurs when the buffer cannot be cleared, for example, because the connection to WinCC (for archiving in WinCC) is interrupted. Procedure: • Establish the connection to WinCC. • Adjust the size of the data block for buffering.

* The "bufferWork.noDeletedItems" parameter contains data records that are overwritten with a buffer overflow. The number of deleted data records is part of the alarm that is output by the "EnS_ArchiveDataLog (Page 156)" FB.

A.2.4 EnS_BufferWrite: Write energy values to data blocks

A.2.4.1 Description of EnS_BufferWrite

Description

The "EnS_BufferWrite" function block writes data (periodic energy data) to the data block "EnS_BufferDB (Page 206)".

The "EnS_BufferWrite" is called internally by the "EnS_EnergyDataBasic (Page 195)" block.

"EnS_BufferWrite" is linked to "EnS_BufferWorkDB (Page 207)" ("bufferWork" parameter) for access control.

The following picture show the circuitry of the parameter:

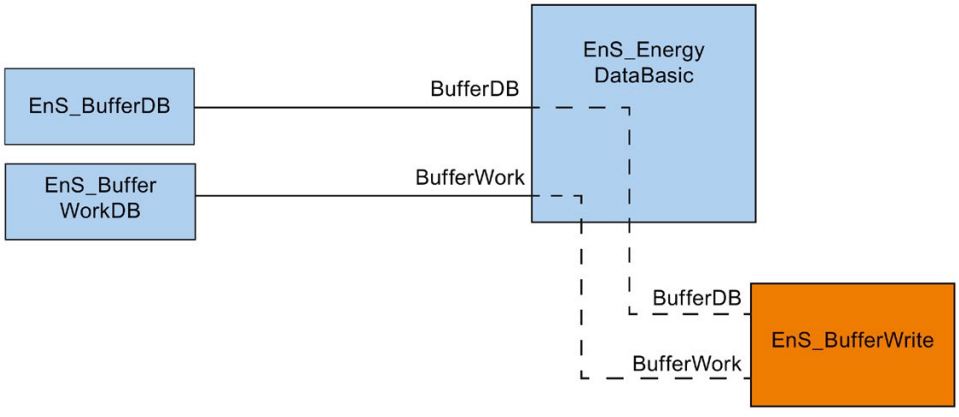

Startup

The block has no startup characteristics.

Reaction to error

When an error occurs, the output parameter "error" is set. The "Status (Page 178)" parameter contains additional error information.

Alarms

The block has no signaling characteristics. Alarms are created by calling function block.

A.2.4.2 Parameters of EnS_BufferWrite

The following table shows the function block "EnS_BufferWrite":

Parameter	Declaration	Data type	Default	Description
bufferDB	Input	DB_ANY	-	Reference to the data block for buffering
busy	Output	BOOL	FALSE	TRUE = Processing is active
done	Output	BOOL	FALSE	TRUE = Data successfully processed
error	Ouput	BOOL	FALSE	TRUE = Error
status	Output	WORD	-	Error status information (Page 178)
bufferWork	InOut	EnS_typeBufferWork (Page 210)	-	Buffer monitoring and status information
request	InOut	EnS_typeBufferWriteCtrl (Page 211)	-	Buffer monitoring information
energyMeta	InOut	EnS_typeEnergyMeta (Page 216)	-	Measuring point-specific data

A.2.4.3 Parameter status

The following table shows the error codes that are generated at the "status" output parameter when errors occur:

Error code (W#16#...)	Description	Error type	Copied to parameter	Solution
8501	Error writing to the buffer	Error writing	bufferWork .writeStat.status WriteFct	The writing is repeated until it is successful. Cause of error: • Wrong data block is connected or no data block is present. Procedure: • Correct the program.
8502	Alarm: Buffer at 100%, loss of data *		bufferWork .noItems / bufferWork .maxItem	Cause of error: • Data loss after buffer overflow • A buffer overflow occurs when the buffer cannot be cleared, for example, because the connection to WinCC (for archiving in WinCC) is interrupted. Procedure: • Make a connection to WinCC (archiving with WinCC) or eliminate the error (for example, memory full) on SIMATIC memory card.
8503	Warning: Buffer level above 80%, imminent loss of data		bufferWork .noItems / bufferWork .maxItem	Cause of error: • The number of ARRAY elements in the data block is >= 0.8 * maximum number of ARRAY elements. Procedure: • Increase the ARRAY limits in the properties of the data block.
8504	Warning: Buffer level above x%, imminent loss of data **		bufferWork .noItems / bufferWork .maxItems	Cause of error: • The number of ARRAY elements in the data block is < 0.8 * maximum number of ARRAY elements. Procedure: • Increase the ARRAY limits in the properties of the data block.

* The "bufferWork.noDeletedItems" parameter contains data records that are overwritten with a buffer overflow. The number of deleted data records is part of the alarm that is output by the "EnS_ArchiveDataLog (Page 156)" FB.

** The warning range is configured under "bufferWork.bufferLimit".

A.2.5 EnS_CalcEnergyData: Calculating energy values

A.2.5.1 Description of EnS_CalcEnergyData

Description

The "EnS_CalcenergyBasic" function block calculates the energy consumption and the average power over the individually configured archiving period (e.g. 15 min).

You can connect the block as follows:

- Power input
- Energy input
- Energy and power input

Block structure with connected power input

The graphic below shows the block structure with a connected power input:

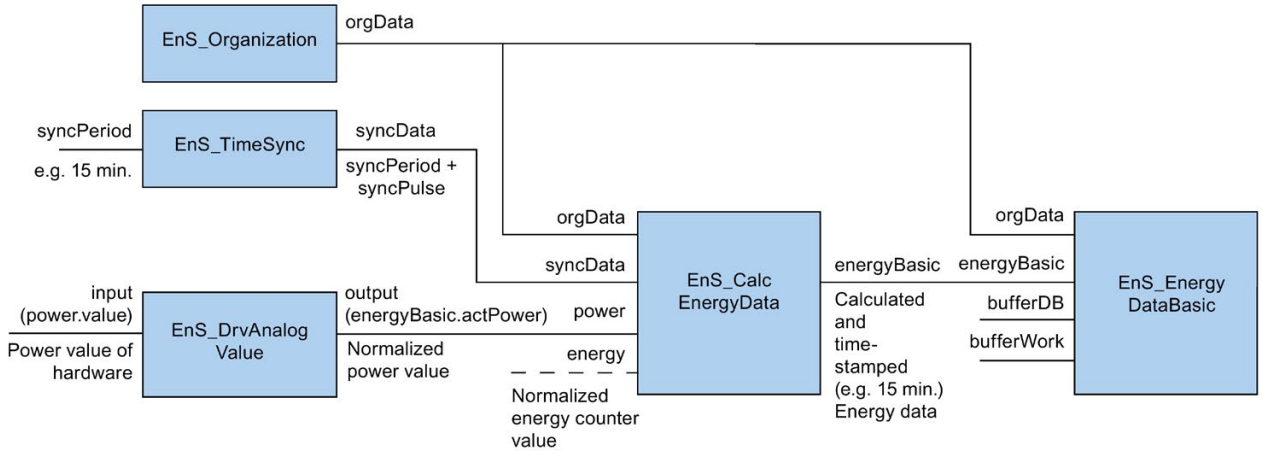

Current power

"power.value" is passed to the power output "energyBasic.actPower".

A dead range function can be configured for the calculated power value ("zeroCut" parameter). If the power value amounts to less than the configured value, the calculated power value is set to 0. Disable the dead range function by assigning "zeroCut" the value 0.

Current energy

At the start of the new archiving period, the current energy value "actEnergy" and the elapsed time of archiving period "syncData.syncPeriod" are reset.

"energyBasic.actEnergy" is calculated during the archiving period using the current power value of the current energy consumption.

The calculated energy value is cyclically added to the current energy value "energyBasic.actEnergy".

Energy counter value

"energyBasic.actEnergyCounter" and "energyBasic.energyCounter" are set to 0.

Block structure with connected energy input

The following graphic shows the block structure at a connected energy input.

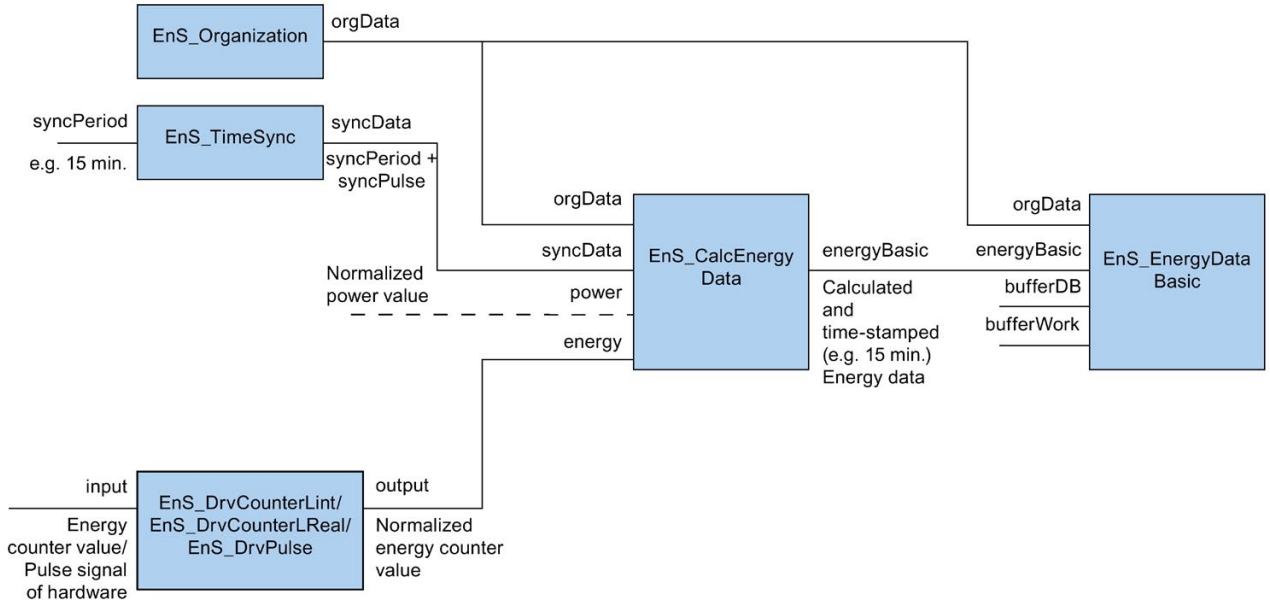

Current energy

The current power consumption "energyBasic.actEnergy" is calculated by subtracting the current energy counter value "energy.value" from the previous counter value.

At the start of the new archiving period, the current energy value "energyBasic.ectEnergy" and the elapsed time of the archiving period "syncData.syncPeriod" are reset.

Current power

The current power "energyBasic.actPower" is calculated at the end of the acquisition interval ("baseAcqTime" + "addAcqTime") based on the energy consumption.

Acquisition interval:

The acquisition interval for the power calculation is defined by the "baseAcqTime" and "addAcqTime" parameters. "baseAcqTime" specifies the minimum acquisition interval. "addAcqTime" specifies the additional acquisition interval.

The difference of the count is determined between the beginning and end of the acquisition interval.

To calculate the current power, the block waits at least the default acquisition interval "baseAcqTime". Calculation of the current power "energyBasic.actPower" starts when one of the requirements is met:

- The count value has changed.
- The additional acquisition interval "addAcqTime" has expired.
- The consumer has been switched off. In this case, the "energy.consumerStatus" parameter is set to FALSE.

  This condition is evaluated only when the consumer status is available ("energyMeta.consumerStatusEnable" = TRUE)

Energy counter value

The current energy counter value "energy.value" is copied to "energyBasic.actEnergyCounter" and "energyBasic.energyCounter" at the end of the archiving period.

Block structure with connected energy and power input

The graphic below shows the block structure with a connected energy and power input:

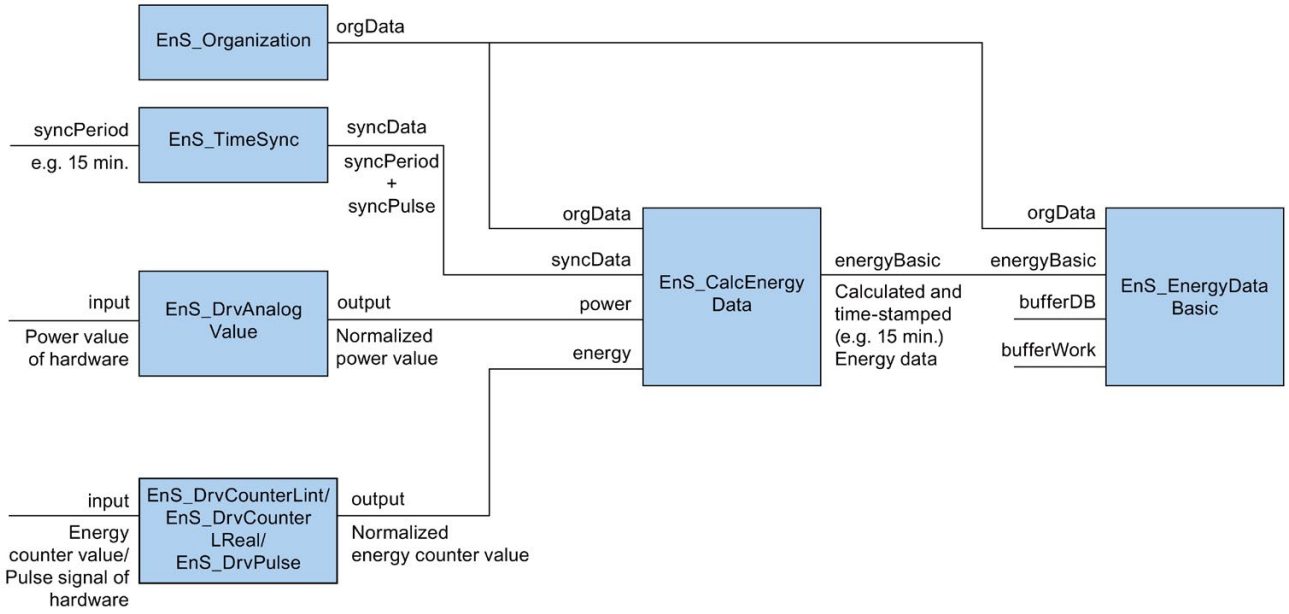

Current power

"power.value" is passed to the power output "energyBasic.actPower".

A dead range function can be configured for the calculated power value ("zeroCut" parameter). If the power value amounts to less than the configured value, the calculated power value is set to 0. Disable the dead range function by assigning "zeroCut" the value 0.

Current energy

The current energy consumption "energyBasic.actEnergy" is calculated by subtracting the current counter value "energy.value" from the initial counter value.

At the start of the new archiving period, the current energy value "energyBasic.actEnergy" and the elapsed time of the archiving period "syncData.syncPeriod" are reset.

Energy counter value

The current energy counter value "energy.value" is copied to "energyBasic.actEnergyCounter" and "energyBasic.energyCounter" at the end of the archiving period.

Average power / energy consumed

At the end of the archiving period "syncData.syncPeriod", the average power consumption "energyBasic.power" is calculated from the energy used "energyBasic.energy".

Status

The calculations are only performed if the input value is valid.

The status of the input value is written to the data structures "energy" ("energy.status") and "power" ("power.status").

If the input value is invalid, the corresponding output parameters are set to 16#FFFF_FFFF . The status is available for downstream blocks for further logging and evaluations.

Momentary values with the status 16#8301 are valid. However, the values are not suitable for calculating the consumed energy and the average power consumption in the current archiving period (for example, 15 minute period).. The values for the average momentary power consumption and the consumed energy are marked with the status 18#8001 .

Startup

During startup, all values are reset and the timers are restarted.

Note

During an incomplete archiving period, the values are set to the status "16#8301" (bad input values during the archiving period).

Reaction to error

When an error occurs, the output parameter "error" is set. The "Status (Page 183)" parameter contains additional error information.

Alarms

The block has no signaling characteristics.

A.2.5.2 Parameters of EnS_CalcEnergyData

The following table shows the function block "EnS_CalcEnergyData":

Parameter	Declaration	Data type	Default	Description
power	Input	EnS_typeAnalogValue (Page 208)	-	Input data power
energy	Input	EnS_typeEnergyCounter (Page 215)	-	Input data energy
energyBasic	Output	EnS_typeEnergyBasic (Page 214)	-	Basic energy data
error	Output	BOOL	FALSE	TRUE = Error
status	Output	WORD	-	Error status information (Page 183)
orgData	InOut	EnS_typeOrgData (Page 221)	-	Organization data
syncData	InOut	EnS_typeSync (Page 221)	-	Synchronization data
energyMeta	InOut	EnS_typeEnergyMeta (Page 216)	-	Measuring point-specific data

A.2.5.3 Parameter status

The following table shows the error codes that are generated at the "status" output parameter when errors occur:

Error code (W#16#...)	Description	Error type	Copied to parameter	Solution
8301	Incorrect input values during the archiving period	Hardware fault	energy.status / power.status	Internal error Cause of error: • Error occurred during archiving period and has already been corrected. Procedure: • No action needs to be taken when an internal error occurs.
8311	Linking error calculation	Connection error	energy.status / power.status	Cause of error: • The "energy" and "power" parameters are not interconnected. Procedure: • Program the interconnection.

Error code (W#16#...)	Description	Error type	Copied to parameter	Solution
8312	Calculation interval "energyMeta .baseAcqTime" < 0	Parameter assignment error	energyMeta.baseAcqTime	Cause of error: • The duration of the calculation interval is invalid. Procedure: • Use valid values for the duration of the calculation interval: 0 - 3600
8313	Extension of calculation interval "energyMeta .addAcqTime" < 0		energyMeta.baseAcqTime / energyMeta.addAcqTime	Cause of error: • The duration of the extension of calculation interval is invalid. Procedure: • Use valid values for the duration of the extension of calculation interval: 0 - 3600
8314	Limit for zero point "energyMeta .zeroCut" < 0.0		energyMeta.zeroCut	Cause of error: • The value of the limit for the zero point is invalid. Procedure: • Use the valid values for the zero point limit: 0.0 - 3.402823e+38.
8315	"energy.value" >= "energyMeta .overflowCntValue"		energy.value / energyMeta.overflowCntValue	Cause of error: • The energy counter value on the "energy.value" parameter is greater than or equal to the overflow value on the "energyMeta.overflowCntValue" parameter. • The "overflowCntValue" parameter is not configured correctly (too small). Procedure: • Correct the configuration. • Increase the overflow value.
8316	Normalization factor "energyMeta .normFactorOut" ≤ 0.0 or > 9999999.0	Parameter assignment error	energyMeta.normFactorOut	Cause of error: • The normalization factor at the "energyMeta.normFactorOut" parameter is invalid. Procedure: • Use valid values for the normalization factor: 0.0 - 9999999.0.

A.2.6 EnS_DrvAnalogValue: Acquire power values of the REAL type

A.2.6.1 Description of EnS_DrvAnalogValue

Description

You use the "EnS_DrvAnalogValue" function block to acquire a power value. The input signal is normalized.

The output value in the "Output" structure is passed to the "EnS_CalcEnergyData (Page 179)" function block.

When electrical energy is measured, the output value has the "Wh" unit. If no electrical measured quantity is measured, for example, the flow rate, the output value has the unit "m³/h", for example.

Startup

The block has no startup characteristics.

Reaction to error

When an error occurs, the output parameter "error" is set. The "Status (Page 186)" parameter contains additional error information.

A.2.6.2 Parameters of EnS_DrvAnalogValue

The following table shows the function block "EnS_DrvAnalogValue":

Parameter	Declaration	Data type	Default	Description
input	Input	REAL	0.0	Analog input signal
normFactor	Input	REAL	1.0	Normalization factor
hWFault	Input	BOOL	FALSE	TRUE = Hardware error of the input signal
sD	Input	VARIANT	-	Associated value for alarm message
messageSup-press	Input	BOOL	FALSE	TRUE = Alarm suppression activated
output	Output	EnS_typeAnalogValue (Page 208)	-	Normalized output signal
error	Output	BOOL	FALSE	TRUE = Error
status	Output	WORD	-	Error status information (Page 186)
errorAlarm	Output	BOOL	FALSE	TRUE = Error of alarm block "Program_Alarm"
statusAlarm	Output	WORD	-	Error status information of the alarm block "Program_Alarm"
alarmState	Output	BYTE	-	Alarm status of the alarm block "Pro-gram_Alarm"
orgData	InOut	EnS_typeOrgData (Page 221)	-	Organization data
energyMeta	InOut	EnS_typeEnergyMeta (Page 216)	-	Measuring point-specific data

A.2.6.3 Parameter status

The following table shows the error codes that are generated at the "status" output parameter when errors occur:

Error code (W#16#...)	Description	Error type	Copied to parameter	Solution
8001	Hardware fault on measuring device	Hardware fault	hWFault	**Causes of error:** • Bad terminal on measuring device • Bad address **Procedure:** • Check the connection of the measuring device or correct the address.
8011	Normalization factor <= 0.0 or > 9999999.0	Parameter assignment error	normFactor	**Causes of error**: • Invalid value at "Normalization factor" setting **Procedure:** • Enter a valid value (0.0 - 9999999.0) for the "Normalization factor" setting.

A.2.6.4 Alarms of EnS_DrvAnalogValue

The alarms are generated with the instruction "Program_Alarm" You can find additional information on "Program_Alarm" in the online help of the TIA Portal information system under "Extended instructions > Alarms".

The following table shows the alarms of the "EnS_DrvAnalogValue" function block:

Alarm block	Alarm text	Alarm class
Program_Alarm	Hardware fault	With acknowledgment

The alarm can be changed.

The "sD" input parameter as an associated value. You can connect the parameters with additional information that is to be displayed in the alarm.

The alarm can be suppressed with "messageSuppress" or overridden with "orgData.messageSuppress" of the function block "EnS_Organization (Page 199)".

A.2.7 EnS_DrvCounterLInt: Acquire energy counter values of the LINT type

A.2.7.1 Description of EnS_DrvCounterLInt

Description

You use the "EnS_DrvCounterLInt" function block to acquire an integral energy meter value of the type LInt (64-bit). The input signal is converted to a standardized energy counter value.

The output value from the "EnS_CalcEnergyData (Page 179)" function block is processed as an energy counter value.

Startup

The block has no startup characteristics.

Reaction to error

When an error occurs, the output parameter "error" is set. The "Status (Page 188)" parameter contains additional error information.

A.2.7.2 Parameters of EnS_DrvCounterLInt

The following table shows the function block "EnS_DrvCounterLInt":

Parameter	Declaration	Data type	Default	Description
input	Input	LINT	0.0	Input counter value
consumerStatus	Input	BOOL	FALSE	Consumer status bit: TRUE = On, FALSE = Off
hWFault	Input	BOOL	FALSE	TRUE = Hardware error of the input signal
sD	Input	VARIANT	-	Associated value for alarm message
messageSup-press	Input	BOOL	FALSE	TRUE = Alarm suppression activated
output	Output	EnS_typeEnergyCounter (Page 215)	-	Output counter value
error	Output	BOOL	FALSE	TRUE = Error
status	Output	WORD	-	Error status information (Page 188)
errorAlarm	Output	BOOL	FALSE	TRUE = Error of alarm block "Program_Alarm"
statusAlarm	Output	WORD	-	Error status information of the alarm block "Program_Alarm"
alarmState	Output	BYTE	-	Alarm status of the alarm block "Pro-gram_Alarm"
orgData	InOut	EnS_typeOrgData (Page 221)	-	Organization data
energyMeta	InOut	EnS_typeEnergyMeta (Page 216)	-	Measuring point-specific data

A.2.7.3 Parameter status

The following table shows the error codes that are generated at the "status" output parameter when errors occur:

Error code (W#16#...)	Description	Error type	Copied to parameter	Solution
8001	Hardware error of the input device	Hardware fault	hWFault	**Causes of error:** • Bad terminal on measuring device • Bad address **Procedure:** • Check the connection of the measuring device
8011	Normalization factor <= 0.0 or > 9999999.0	Parameter assignment error	energyMeta .normFactorIn	**Causes of error:** • Invalid value at "Normalization factor" setting **Procedure:** • Enter a valid value (0.0 - 9999999.0) for the "Normalization factor" setting.
8012	Counter overflow value < 1.0 or > 1.0e+21		energyMeta .overflowCntValue	**Causes of error:** • Invalid value at "Overflow value" setting **Procedure:** • Enter a valid value (1.0 - 1.0e+21) for the user-defined "Overflow value" setting.

A.2.7.4 Alarms of EnS_DrvCounterLInt

The alarms are generated with the instruction "Program_Alarm" You can find additional information on "Program_Alarm" in the online help of the TIA Portal information system under "Extended instructions > Alarms".

The following table shows the alarms of the "EnS_DrvCounterLInt" function block:

Alarm block	Alarm text	Alarm class
Program_Alarm	Hardware fault	With acknowl-edgment

The alarm can be changed.

The "sD" input parameter as an associated value. You can connect the parameters with additional information that is to be displayed in the alarm.

The alarm can be suppressed with "messageSuppress" or overridden with "orgData.messageSuppress" of the function block "EnS_Organization (Page 199)".

A.2.8 EnS_DrvCounterLReal: Acquire energy counter values of the LREAL type

A.2.8.1 Description of EnS_DrvCounterLReal

Description

You use the "EnS_DrvCounterLInt" function block to acquire a floating point energy meter value of the type LREAL (64-bit). The input signal is converted into a normalized energy value.

The output value from the "EnS_CalcEnergyData (Page 179)" function block is processed as an energy counter value.

Startup

The block has no startup characteristics.

Reaction to error

When an error occurs, the output parameter "error" is set. The "Status (Page 190)" parameter contains additional error information.

A.2.8.2 Parameters of EnS_DrvCounterLReal

The following table shows the function block "EnS_DrvCounterLReal":

Parameter	Declaration	Data type	Default	Description
input	Input	LREAL	0.0	Input counter value
consumerStatus	Input	BOOL	FALSE	User status bit: 1 = On, 0 = Off
hWFault	Input	BOOL	FALSE	FALSE = Hardware error of the input signal
sD	Input	VARIANT	-	Associated value for alarm message
messageSup-press	Input	BOOL	FALSE	TRUE = Alarm suppression activated
output	Output	EnS_typeEnergyCounter (Page 215)	-	Output count values
error	Output	BOOL	FALSE	TRUE = Error
status	Output	WORD	-	Error status information (Page 190)
errorAlarm	Output	BOOL	FALSE	TRUE = Error of alarm block "Program_Alarm"
statusAlarm	Output	WORD	-	Error status information of the alarm block "Program_Alarm"
alarmState	Output	BYTE	-	Alarm status of the alarm block "Pro-gram_Alarm"
orgData	InOut	EnS_typeOrgData (Page 221)	-	Organization data
energyMeta	InOut	EnS_typeEnergyMeta (Page 216)	-	Measuring point-specific data

A.2.8.3 Parameter status

The following table shows the error codes that are generated at the "status" output parameter when errors occur:

Error code (W#16#...)	Description	Error type	Copied to parameter	Solution
8001	Hardware fault on measuring device	Hardware fault	hWFault	Causes of error: • Bad terminal on measuring device • Bad address Procedure: • Check the connection of the measuring device or correct the address.
8011	Normalization factor <= 0.0 or > 9999999.0	Parameter assignment error	energyMeta .normFactorIn	Causes of error: • Invalid value at "Normalization factor" setting Procedure: • Enter a valid value (0.0 - 9999999.0) for the "Normalization factor" setting.
8012	Counter overflow value < 1.0 or > 1.0e+21		energyMeta .overflowCntValue	Causes of error: • Invalid value at "Overflow value" setting Procedure: • Enter a valid value (1.0 - 1.0e+21) for the user-defined "Overflow value" setting.

A.2.8.4 Alarms of EnS_DrvCounterLReal

The alarms are generated with the instruction "Program_Alarm" You can find additional information on "Program_Alarm" in the online help of the TIA Portal information system under "Extended instructions > Alarms".

The following table shows the alarms of the "EnS_DrvCounterLReal" function block:

Alarm block	Alarm text	Alarm class
Program_Alarm	Hardware fault	With acknowledgment

The alarm can be changed.

The "sD" input parameter as an associated value. You can connect the parameters with additional information that is displayed in the alarm.

The alarm can be suppressed with "messageSuppress" or overridden with "orgData.messageSuppress" of the function block "EnS_Oganization (Page 199)".

A.2.9 EnS_DrvPulse: Acquiring pulse signals

A.2.9.1 Description of EnS_DrvPulse

Description

The "EnS_DrvPulse" function block adds the acquired pulses, converts them with the configured normalization factor and calculates an energy counter value of the LREAL type. The output value from "EnS_CalcEnergyData (Page 179)" is processed as a normalized energy counter value.

Startup

The block has no startup characteristics.

Reaction to error

When an error occurs, the output parameter "error" is set. The "Status (Page 192)" parameter contains additional error information.

A.2.9.2 Parameters of EnS_DrvPulse

The following table shows the function block "EnS_DrvPulse":

Parameter	Declaration	Data type	Default	Description
input	Input	BOOL	FALSE	Pulse input
consumerStatus	Input	BOOL	FALSE	User status bit: TRUE = On, FALSE = Off
hWFault	Input	BOOL	FALSE	TRUE = Hardware error of the input signal
sD	Input	VARIANT	-	Associated value for alarm message
messageSup-press	Input	BOOL	FALSE	TRUE = Alarm suppression activated
output	Output	EnS_typeEnergyCounter (Page 215)	-	Output count values
error	Output	BOOL	FALSE	TRUE = Error
status	Output	WORD	-	Error status information (Page 192)
errorAlarm	Output	BOOL	FALSE	TRUE = Error Program_Alarm
statusAlarm	Output	WORD	-	Error status information of the "Program_Alarm" alarm block
alarmState	Output	BYTE	-	Alarm status of the "Program_Alarm" alarm block
orgData	InOut	EnS_typeOrgData (Page 221)	-	Organization data
energyMeta	InOut	EnS_typeEnergyMeta (Page 216)	-	Measuring point-specific data

A.2.9.3 Parameter status

The following table shows the error codes that are generated at the "status" output parameter when errors occur:

Error code (W#16#...)	Description	Error type	Copied to parameter	Solution
8001	Hardware fault on measuring device	Hardware fault	hWFault	**Causes of error:** • Bad terminal on measuring device • Bad address **Procedure:** • Check the connection of the measuring device or correct the address.
8011	Normalization factor <= 0.0 or > 9999999.0	Parameter assignment error	energyMeta .normFactorIn	**Causes of error**: • Invalid value at "Normalization factor" setting **Procedure:** • Enter a valid value (0.0 - 9999999.0) for the "Normalization factor" setting.
8012	Counter overflow value < 1.0 or > 1.0e+21		energyMeta .overflowCntValue	**Causes of error:** • Invalid value at "Overflow value" setting **Procedure:** • Enter a valid value (1.0 - 1.0e+21) for the user-defined "Overflow value" setting.

A.2.9.4 Alarms of EnS_DrvPulse

The alarms are generated with the instruction "Program_Alarm" You can find additional information on "Program_Alarm" in the online help of the TIA Portal information system under "Extended instructions > Alarms".

The following table shows the alarms of the "EnS_DrvPulse" function block:

Alarm block	Alarm text	Alarm class
Program_Alarm	Hardware fault	With acknowledgment

The alarm can be changed by the user.

The "sD" input parameter as an associated value. You can connect the parameters with additional information that is to be displayed in the alarm.

The alarm can be suppressed with "messageSuppress" or overridden with "orgData.messageSuppress" of the function block "EnS_Organization (Page 199)".

A.2.10 EnS_EnergyDataAdv: Providing advanced energy values

A.2.10.1 Description of EnS_EnergyDataAdv

Description

The "EnS_EnergyDataAdv" function block provides advanced energy data record collected from a measuring point. The function block is used as a central interface to WinCC Professional or other programs (for example, SIMATIC Energy Manager Pro).

Startup

The block has no startup characteristics.

Reaction to error

When an error occurs, the output parameter "error" is set. The "Status (Page 193)" parameter contains additional error information.

Alarms

The block has no signaling characteristics.

A.2.10.2 Parameters of EnS_EnergyDataAdv

The following table shows the block parameters of the "EnS_EnergyDataAdv" block:

Parameter	Declaration	Data type	Default	Description	HMI *
advData	Input	EnS_typeEnergyAdv (Page 212)	-	Advanced measured data record	X
error	Output	BOOL	-	TRUE = Error	-
status	Output	WORD	-	Error status information (Page 193)	-
orgData	InOut	EnS_typeOrgData (Page 221)	-	Organization data	-
energyMeta	InOut	EnS_typeEnergyMeta (Page 216)	-	Measuring point-specific data	-

* The highlighted parameters are assigned the system attribute "Accessible for HMI" and "Visible for HMI". They are used for operator control and monitoring functions on the HMI device, for example, for displaying a current value in a faceplate.

A.2.10.3 Parameter status

The "error" output parameter is set when an error occurs in a lower-level function block.

The "status" parameter contains additional error information. The error information is displayed in the "status" parameter until the error is cleared. Only then is the information about the next pending error displayed.

A.2.11 EnS_EnergyDataAdvMinMax: Providing advanced minimum and maximum values

A.2.11.1 Description of EnS_EnergyDataAdvMinMax

Description

The "EnS_EnergyDataAdvMinMax" function block provides minimum and maximum values of the advanced energy data for the output, for example, in WinCC Professional.

Startup

The block has no startup characteristics.

Reaction to error

When an error occurs, the output parameter "error" is set. The error information of the lower-level function block (from measurement hardware, for example) are output at the "status (Page 194)" output. The error information is displayed in the "status" parameter until the error is cleared. Only then is the information about the next pending error displayed.

Alarms

The block has no signaling characteristics.

A.2.11.2 Parameters of EnS_EnergyDataAdvMinMax

The following table shows the function block "EnS_EnergyDataAdvMinMax":

Parameter	Declaration	Data type	Default	Description	HMI *
advDataMin	Input	EnS_typeEnergyAdv (Page 212)	-	Data record with minimum values of the advanced energy values	X
advDataMax	Input	EnS_typeEnergyAdv (Page 212)	-	Data record with maximum values of the advanced energy values	X
error	Output	BOOL	-	TRUE = Error	
status	Output	WORD	-	Error status information (Page 194)	
orgData	InOut	EnS_typeOrgData (Page 221)	-	Organizational data	
energyMeta	InOut	EnS_typeEnergyMeta (Page 216)	-	Process tag specific data	

* The selected parameters receive the system attribute "Available for HMI" and "Visible in HMI". They are used for operator control and monitoring functions on the HMI device, for example, for displaying a current value in the faceplate.

A.2.11.3 Parameter status

The "error" output parameter is set when an error occurs in a lower-level function block.

The "status" parameter contains additional error information. The error information is displayed in the "status" parameter until the error is cleared. Only then is the information on the next pending error displayed.

A.2.12 EnS_EnergyDataBasic: Providing metadata and energy values

A.2.12.1 Description of EnS_EnergyDataBasic

Description

The "EnS_EnergyDataBasic" function block provides basic metadata and energy data record collected from a measuring point. The function block is used as a central interface to WinCC Professional or other programs (for example, SIMATIC Energy Manager Pro).

Metadata

The metadata at the "energyMeta" parameter with the "EnS_typeEnergyMeta (Page 216)" data type contains general information about the acquistion object or the measurement hardware.

Startup

The block has no startup characteristics.

Reaction to error

When an error occurs, the output parameter "error" is set. The "Status (Page 196)" parameter contains additional error information.

A.2.12.2 Parameters of EnS_EnergyDataBasic

The following table shows the function block "EnS_EnergyDataBasic":

Parameter	Declaration	Data type	Default	Description	HMI *
energyMeta	Input	EnS_typeEnergyMeta (Page 216)	-	Measuring point-specific data	X
energyBasic	Input	EnS_typeEnergyBasic (Page 214)	-	Basic energy data	X
bufferDB	Input	DB_ANY	-	Pointer to the data block for buffering	-
sD	Input	VARIANT	-	Associated value for alarm messages	-
messageSup-press	Input	BOOL	FALSE	TRUE = Alarm suppression activated	X
error	Output	BOOL	FALSE	TRUE = Error	-
status	Output	WORD	-	Error status information (Page 196)	-
status1	Output	WORD	-	Error status information 1	-
status2	Output	WORD	-	Error status information 2	-
status3	Output	WORD	-	Error status information 3	-
status4	Output	WORD	-	Error status information 4	-
status5	Output	WORD	-	Error status information 5	-

Parameter	Declaration	Data type	Default	Description	HMI *
errorAlarm1	Output	BOOL	FALSE	TRUE = Error Program_Alarm1	-
statusAlarm1	Output	WORD	-	Error status information Program_Alarm1	-
alarmState1	Output	BYTE	-	Alarm status Program_Alarm1	-
errorAlarm2	Output	BOOL	FALSE	TRUE = Error Program_Alarm2	-
statusAlarm2	Output	WORD	-	Error status information Program_Alarm2	-
alarmState2	Output	BYTE	-	Alarm status Program_Alarm2	-
errorAlarm3	Output	BOOL	FALSE	TRUE = Error Program_Alarm3	-
statusAlarm3	Output	WORD	-	Error status information Program_Alarm3	-
alarmState3	Output	BYTE	-	Alarm status Program_Alarm3	-
errorAlarm4	Output	BOOL	FALSE	TRUE = Error Program_Alarm4	-
statusAlarm4	Output	WORD	-	Error status information Program_Alarm4	-
alarmState4	Output	BYTE	-	Alarm status Program_Alarm4	-
errorAlarm5	Output	BOOL	FALSE	TRUE = Error Program_Alarm5	-
statusAlarm5	Output	WORD	-	Error status information Program_Alarm5	-
alarmState5	Output	BYTE	-	Alarm status Program_Alarm5	-
orgData	InOut	EnS_typeOrgData (Page 221)	-	Organization data	-
bufferWork	InOut	EnS_typeBufferWork (Page 210)	-	Buffer monitoring and status information	-

* The selected parameters receive the system attribute "Available for HMI" and "Visible in HMI". They are used for operator control and monitoring functions on the HMI device, for example, for displaying a current value in the faceplate.

A.2.12.3 Parameter status

The error information of the lower-level function blocks (for example, "EnS_TimeSync") are added to the "status1", "status5" output parameter. The error information is displayed in the "status" parameter until the error is cleared. Only then is the information of the next pending error displayed.

A.2.12.4 Alarms of EnS_EnergyDataBasic

The alarms are generated with the instruction "Program_Alarm" You can find additional information on "Program_Alarm" in the online help of the TIA Portal information system under "Extended instructions > Alarms".

The following table shows the alarms of the "EnS_EnergyDataBasic" function block:

Alarm block	Alarm text	Alarm class
Program_Alarm1	Parameter assignment error <text list: EnS_Alarms:#status1>	With acknowl-edgment
Program_Alarm2	<Text list: EnS_Alarms:#status2>	With acknowl-edgment
Program_Alarm3	Archiving error <text list: EnS_Alarms:#status3>.	With acknowl-edgment
Program_Alarm4	Reserved (warning for limit violation)	With acknowl-edgment
Program_Alarm5	Reserved (warning for limit violation)	With acknowl-edgment

The additional alarm texts are written in the "EnS_Alarms" text list. The output parameters <"status1" to "status5" contain the value for the error information of the "EnS_EnergyDataBasic" FB and its lower-level FBs.

Alarm block	Error code (W#16#...)	Alarm text	Parameter	Function block
Program_Alarm1	801x	Hardware	status1	EnS_Drvxxx
	821x	Time synchronization		EnS_TimeSync (Page 200)
	831x	Calculation		EnS _CalcEnergyData (Page 179)
	8311	Linking error calculation		
Program_Alarm2	800x	Hardware fault	status2	EnS_Drvxxx
	8201	External synchronization signal lost		EnS_TimeSync (Page 200)
	8202	External synchronization signal not within valid time range		
	8203	Time leap synchronization time		
ProgramAlarm3	8501	Error writing to the buffer	status3	EnS_BufferWrite (Page 176)
	8502	Alarm: Buffer at 100%, loss of data		
	8503	Warning: Buffer level above 80%, imminent loss of data		
	8504	Warning: Buffer level above x%, imminent loss of data		
	8512	Possible data loss		EnS_BufferRead (Page 174)

The associated values are assigned as follows:

Alarm block	Associated value	Parameter	Meaning
Program_Alarm1	1	status1	Error status information 1
	2	sD	Free
	3	-	Not used
	4	-	Not used
	5	-	Not used
	6	-	Not used
	7	-	Not used
	8	-	Not used
	9	-	Not used
	10	-	Not used
Program_Alarm2	1	status2	Error status information 2
	2	sD	Free
	3	-	Not used
	4	-	Not used
	5	-	Not used
	6	-	Not used
	7	-	Not used
	8	-	Not used
	9	-	Not used
	10	-	Not used
Program_Alarm3	1	status3	Error status information 3
	2	Reserved*	Reserved
	3	sD	Free
	4	-	Not used
	5	-	Not used
	6	-	Not used
	7	-	Not used
	8	-	Not used
	9	-	Not used
	10	-	Not used

* The associated values are reserved for future use.

The alarm can be changed.

The "sD" input parameter as an associated value. You can connect the parameters with additional information that is displayed in the alarm.

The alarm can be suppressed with "messageSuppress" or overridden with "orgData.messageSuppress" of the function block "EnS_Organization (Page 199)".

A.2.13 EnS_Organization: Providing organizational data

A.2.13.1 Description of EnS_Organization

Description

The "EnS_Organization" function block provides central organizational data that is accessed by other function blocks. The block must be called once by each cyclic interrupt OB.

The block manages the following data:

- Start-up flag ("orgData.startup")

  The startup flag is a parameter of the BOOL type. The parameter is at the "orgData.startup" output parameter of the "EnS_Organization" function block. The function block uses this parameter to signal if the program is still in the startup phase. You set the number of cycles for the startup phase at the input parameter "runUpCyc" of the function block. The default is a startup phase of ten cycles.
- Alarm suppression ("orgData.messageSuppress")

  You can use the parameter to specify if messages from the user program of the CPU are to be suppressed.
- Momentary time stamp (UTC) of the CPU

  The momentary time stamp corresponds to the CPU system time.

Startup

The block sets the "orgData.startup" output parameter for the number of configured startup cycles "runUpCyc" and suppresses the alarms using the "orgData.messageSuppress" parameter.

Reaction to error

When an error occurs, the output parameter "error" is set. The "status" parameter contains additional error information.

Alarms

The block has no signaling characteristics.

A.2.13.2 Parameters of EnS_Organization

The following table shows the function block "EnS_Organization":

Parameter	Declaration	Data type	Default	Description
runUpCyc	Input	UINT	10	Number of start-up cycles
messageSup-press	Input	BOOL	FALSE	TRUE = Alarm suppression activated
orgData	Output	EnS_typeOrgData (Page 221)	-	Organization data
error	Output	BOOL	FALSE	TRUE = Error
status	Output	WORD	-	Error status information

A.2.14 EnS_TimeSync: Synchronize timers

A.2.14.1 Description of EnS_TimeSync

Description

The block is used as a central clock to synchronize the block for energy acquisition "EnS_CalcEnergyData (Page 179)".

The clock pulse can be specified as follows:

The "syncData.syncPulse" clock generator is triggered once per archiving period by an external synchronization pulse "extSyncPulse", for example, from a power supply company, or the internal CPU time. The block evaluates the from rising edge of the synchronization pulse. The time stamp for the synchronization pulse at the "syncData.syncTimeStamp" parameter is rounded up or down to the nearest whole time value, for example, 15 minutes.

The synchronization pulse is only acquired within a specified range of validity. You define the range of validity with the "validTimeRange" block parameter. Tolerance can be set for a premature synchronization pulse. Premature synchronization pulses are still considered valid if they are acquired up to one CPU cycle too early. Premature synchronization pulses depend on the cycle time of the cyclic interrupt OB in which the "EnS_TimeSync" block is called.

If the cyclic interrupt OB is called once per second, the external synchronization pulse must be set no earlier than the 59th second.

If the cyclic interrupt OB is called twice per second, the external synchronization pulse must be set no earlier than the 58th second.

If the external synchronization pulse is set too early by a power supply company, the synchronization pulse of the block is not set and the error status 16#8202 is set.

Invalid pulses are identified by the status "16#8202" and acknowledged with a message.

- External synchronization "extEnable" = TRUE

  Examples:

  – External synchronization pulse "extSyncPulse" set to early:

    The period between the momentary CPU time stamp and the next period is less than the calculation interval of the function block. In this case, the synchronization time stamp is rounded up to the nearest whole value of the period.

    Calculation interval: 1 s

    Period: 15 min

    Current CPU time: 6:59:59:500

    Synchronization time stamp: 7:00:00:000

- External synchronization pulse "extSyncPulse" set to late:

  The time period between the current CPU time stamp and the last period is less than the "validTimeRange". In this case, the synchronization time stamp is rounded down to the last whole value of the period.

  Calculation interval: 1 s

  Period: 15 min

  Scope: 10 s

  Current CPU time 7:00:00:001

  Synchronization time stamp: 7:00:00:000

- External synchronization pulse "extSyncPulse" is out of range:

  The time period between the current CPU time stamp and the last period is greater than the "validTimeRange". In this case, the synchronization time stamp is discarded and an error message (status = 16#8202) appears.

  Calculation interval: 1 s

  Period: 15 min

  Scope: 10 s

  Current CPU time: 7:00:20:000

  Synchronization time stamp: Error message (status = 16#8202)

- Set the "syncPeriod" parameter

  If external synchronization is disabled "extEnable" = FALSE, the "syncPeriod" parameter contains the period of time for the synchronization, for example, 15 minutes.

- The archiving of energy data behaves as follows when a synchronization pulse is missing:
  - The energy data for archiving period is calculated until the synchronization pulse is set.
  - The power values are averaged over the complete archiving period beginning with the last synchronization pulse.
  - The energy count values are accumulated over the complete archiving period beginning with the last synchronization pulse.

Time stamps are output as UTC (Coordinated Universal Time).

You can create multiple instances of this block, and thereby produce more archiving periods. The usual periods are 15 minutes for electrical energy and 60 minutes for non-electrical media.

Startup

During startup, the internally running timers are restarted.

Reaction to error

When an error occurs, the output parameter "error" is set. The "Status (Page 203)" parameter contains additional error information.

Alarms

The block has no signaling characteristics.

A.2.14.2 Parameters of EnS_TimeSync

The following table shows the function block "EnS_TimeSync":

Parameter	Declaration	Data type	Default	Description
extEnable	Input	BOOL	FALSE	TRUE = Enable for external synchronization
extSyncPulse	Input	BOOL	FALSE	External synchronization pulse
syncPeriod	Input	TIME	T#15m	Archiving period
pulseTime	Input	TIME	T#2s	Duration of the synchronization pulse
validTimeRange	Input	TIME	T#10s	Scope for the external synchronization pulse
monitoring-TimeExtSync	Input	TIME	T#2s	Reserved
modeExtSync	Input	BOOL	FALSE	Reserved
offsetUTCToLo-calTime	Input	TIME	T#0s	Offset of UTC Coordinated Universal Time from the local time
syncData	Output	EnS_typeSync (Page 221)	-	Synchronization data
curTimeStamp	Output	DT	-	Momentary time stamp at block call
error	Output	BOOL	FALSE	TRUE = Error
status	Output	WORD	-	Error status information (Page 203)
orgData	InOut	EnS_typeOrgData (Page 221)	-	Organization data
resetEr-rorExtSync	InOut	BOOL	FALSE	Reserved

A.2.14.3 Parameter status

The following table shows the error codes that are generated at the "status" output parameter when errors occur:

Error code (W#16#...)	Description	Error type	Copied to parameter	Solution
8201	The external synchronization pulse extSyncPulse was lost during the syncPeriod archiving period.	Hardware fault	extSyncPulse	**Causes of error:** • External synchronization pulse lost **Procedure:** • Check the hardware address of the pulse. • If the external pulse is unreliable, use the internal time synchronization (CPU time as clock).
8202	The external synchronization pulse extSyncPulse was not set within the validTimeRange range of validity.		extSyncPulse / validTimeRange	**Causes of error:** • External synchronization pulse was set outside the range of validity. The default setting for the range of validity is 10 s . **Procedure:** • If the external pulse is unreliable, use the internal time synchronization (CPU time as clock).
8203	The time interval of the current time stamp is longer than the duration of the syncPeriod archiving period.	Time error	curTimeStamp / syncPeriod	Internal error **Causes of error**: • The time interval of the current time stamp is longer than the duration of the archiving period. **Procedure:** • If the external pulse is unreliable, use the internal time synchronization (CPU time as clock).

Error code (W#16#...)	Description	Error type	Copied to parameter	Solution
8211	The duration of the syncPeriod archiving period is shorter than: • Duration of the synchronization pulse pulseTime or • 1 minute	Parameter assignment error	syncPeriod / pulseTime	Causes of error: • The duration of the synchronization pulse is longer than the duration of the archiving period or longer than 1 minute. Procedure: • If the external pulse is unreliable, use the internal time synchronization (CPU time as clock).
8212	The duration of the syncPeriod archiving period is longer than one day (24 hours).		syncPeriod	Causes of error: • The duration of the syncPeriod archiving period is longer than one day (24 hours). Procedure: • Enter a valid value (1 min - 24 h) at the setting for the duration of the archiving period.
8213	The duration of the syncPeriod archiving period is not an integer value.		syncPeriod	Causes of error: • The duration of the syncPeriod archiving period is not an integer value. Procedure: • Enter a valid value (integer) at the setting for the duration of the archiving period.
8214	The duration of the syncPeriod archiving period is not an integer part of one hour/one day. The following are valid, for example: • 1 minute • 5 minutes • 15 minutes • 12 hours The following are invalid, for example: • 7 minutes • 11 minutes • 5 hours		syncPeriod	Causes of error: • The duration of the syncPeriod archiving period is not an integer part of one hour/one day. Procedure: • Enter a valid value at the setting for the duration of the archiving period.

Error code (W#16#...)	Description	Error type	Copied to parameter	Solution
8215	The offset of the standard UTC time to the local time is not a multiple of 15 minutes or shorter than 15 minutes. The following are valid, for example: • 1 hour • 4 hours • 30 minutes The following are invalid, for example: • 10 minutes • 25 minutes	Parameter assignment error	extSyncPulse	Causes of error: • The offset of the UTC to the local time is not a multiple of 15 minutes or shorter than 15 minutes. Procedure: • Enter a valid value for the offset of the standard UTC time to the local time.

A.3 Data blocks (DBs)

A.3.1 EnS_BufferDB

A.3.1.1 Description of EnS_BufferDB

Description

The global data block "EnS_BufferDB" contains periodically acquired energy data in an array. The energy data is written by the "EnS_EnergyDataBasic (Page 195)" function block to the "EnS_BufferDB" data block. For this, the "EnS_BufferWrite (Page 176)" function block is called internally by the "EnS_EnergyDataBasic" function block.

The energy data is read from the "EnS_BufferDB" data block by the "EnS_ArchiveDataLog (Page 156)" function block or the Energy Suite SCADA component. For this, the "EnS_BufferRead (Page 174)" function block is called internally by the "EnS_ArchiveDataLog" function block.

You can adjust the size of arrays according to your requirements and the memory capacity of the CPU. To do this, set the number of desire ARRAY elements in the properties of the "EnS_BufferDB" data block. In the "EnS_BufferWorkDB (Page 207)" block, you also set a number of other parameters, for example, a fill level warning.

Each array element corresponds to the value of the type "EnS_typeValue (Page 222)". Four more values are contained in it

- Tag name
- Value
- Time stamp
- Status

You can add several data blocks to a CPU as long as the CPU has enough free memory available for buffering. A pair always includes two data blocks, "EnS_BufferDB" and "EnS_BufferWorkDB".

A.3.1.2 Structure of EnS_BufferDB

The following table shows the structure of the data block "EnS_BufferDB":

Element	Data type	Description
EnS_BufferDB	ARRAY[0..n] of "EnS_typeValue"	n+1 elements of calculated data values

A.3.2 EnS_BufferWorkDB

A.3.2.1 Description of EnS_BufferWorkDB

Description

The "EnS_BufferWorkDB" data block is a global data block of the type "EnS_typeBufferWork (Page 210)". The data block contains the control and status information of the buffer DB "EnS_BufferDB (Page 206)". The values of the "EnS_BufferWorkDB" data block are evaluated and described internally by the "EnS_BufferRead (Page 174)" and "EnS_BufferWrite (Page 176)" function blocks for the coordination of the read and write access to the buffer DB "EnS_BufferDB".

A.3.2.2 Structure of EnS_BufferWorkDB

The following table shows the structure of the data block "EnS_BufferWorkDB":

Element	Data type	Description
EnS_BufferWorkDB	EnS_typeBufferWork (Page 210)	Buffer monitoring and status information

A.4 User-defined data types (UDTs)

A.4.1 EnS_typeAnalogValue

A.4.1.1 Description of EnS_typeAnalogValue

Description

The "EnS_typeAnalogValue" PLC data type describes the interface between the function block for analog inputs ".EnS_DrvAnalogValue (Page 185)" and the function block for periodic calculation of energy data "EnS_CalcEnergyData (Page 179)".

A.4.1.2 Structure of EnS_typeAnalogValue

The following table shows the parameters of the "EnS_typeAnalogValue" PLC data type:

Parameter	Data type	Default	Description
value	REAL	0.0	Process value
status	WORD	16#FFFF	Status of the process value

A.4.2 EnS_typeBufferReadCtrl

A.4.2.1 Description of EnS_typeBufferReadCtrl

Description

The "EnS_typeBufferReadCtrl" PLC data type contains the required control information for reading data from the data block for buffering "EnS_BufferDB (Page 206)".

A.4.2.2 Structure of EnS_typeBufferReadCtrl

The following table shows the parameters of the "EnS_typeBufferReadCtrl" PLC type data:

Parameter	Data type	Default	Description
req	BOOL	FALSE	Request to read data from the data block for buffering "EnS_BufferDB (Page 206)"

A.4.3 EnS_typeBufferReadStat

A.4.3.1 Description of EnS_typeBufferReadStat

Description

The "EnS_typeBufferReadStat" PLC data type contains the data to be read and the status information for reading from the data block for buffering "EnS_BufferDB (Page 206)".

A.4.3.2 Structure of EnS_typeBufferReadStat

The following table shows the parameters of the "EnS_typeBufferReadStat" PLC data type:

Parameter	Data type	Default	Description
data	EnS_typeValue (Page 222)	-	Data read from the buffer
busy	BOOL	FALSE	TRUE = Processing is active
done	BOOL	FALSE	TRUE = Data successfully processed
error	BOOL	FALSE	TRUE = Error reading
status	WORD	16#0000	Status of the buffer
statusReadFct	WORD	16#0000	Status of "ReadFromArrayDB"

A.4.4 EnS_typeBufferWork

A.4.4.1 Description of EnS_typeBufferWork

Description

The "EnS_typeBufferWork" PLC data type contains all the control and status information for writing and reading data in the data block for buffering "EnS_BufferDB (Page 206)".

A.4.4.2 Structure of EnS_typeBufferWork

The following table shows the parameters of the "EnS_typeBufferWork" PLC data type:

Parameter	Data type	Default	Description
readCtrl	EnS_typeBufferReadCtrl (Page 208)	-	Control information of the buffer for reading data
readStat	EnS_typeBufferReadStat (Page 209)	-	Data and status information of the buffer for reading data
writeCtrl	EnS_typeBufferWriteCtrl (Page 211)	-	Control information of the buffer for writing data
writeStat	EnS_typeBufferWriteStat (Page 211)	-	Status information of the buffer for writing data
busy	BOOL	FALSE	TRUE = Processing is active
done	BOOL	FALSE	TRUE = Data successfully processed
error	BOOL	FALSE	TRUE = Error in data processing
status	WORD	16#0000	Status of the buffer
maxItem	UDINT	0	Maximum number of data records of "EnS_BufferDB"
maxItemRead	UDINT	0	Reserved
maxCycleWrite	UDINT	30	Maximum number of cycles for writing data
cycleWrite	UINT	0	Number of cycles for writing data
noItems	UDINT	0	Number of written data records from "EnS_BufferDB"
noDeletedItems	UDINT	0	Number of deleted data records from "EnS_BufferDB" with a buffer overflow
writeItem	DINT	0	Write cursor on the data record
readItem	DINT	0	Read cursor on the data record
bufferLimit	UINT	20	Configurable buffer limit for warnings in [%] (validity range 1-79). Starting at an 80% fill level of the buffer, an error status is displayed by default (see also "EnS_BufferWrite (Page 176)").

A.4.5 EnS_typeBufferWriteCtrl

A.4.5.1 Description of EnS_typeBufferWriteCtrl

Description

The "EnS_typeBufferWriteCtrl" PLC data type contains the periodic energy data to be written to the data block for buffering "EnS_BufferDB (Page 206)" and the required control information (for example, query) for writing data.

A.4.5.2 Structure of EnS_typeBufferWriteCtrl

The following table shows the parameters of the "EnS_typeBufferWriteCtrl" PLC data type:

Parameter	Data type	Default	Description
req	BOOL	FALSE	Request to write data to the buffer.
data	EnS_typeValue (Page 222)	-	Periodic energy data that are written to the buffer.

A.4.6 EnS_typeBufferWriteStat

A.4.6.1 Description of EnS_typeBufferWriteStat

Description

The "EnS_typeBufferWriteStat" PLC data type contains status information for writing periodic energy data to the data block for buffering "EnS_BufferDB (Page 206)".

A.4.6.2 Structure of EnS_typeBufferWriteStat

The following table shows the parameters of the "EnS_typeBufferWriteStat" PLC data type:

Parameter	Data type	Default	Description
busy	BOOL	FALSE	TRUE = Processing is active
done	BOOL	FALSE	TRUE = Data successfully processed
error	BOOL	FALSE	TRUE = Error in data processing
status	WORD	16#0000	Status of the buffer
statusWriteFct	WORD	16#0000	Write status

A.4.7 EnS_typeEnergyAdv

A.4.7.1 Description of EnS_typeEnergyAdv

Description

The "EnS_typeEnergyAdv" PLC data type contains advanced energy data which are read from measuring instruments and provided to a CPU or HMI system.

A.4.7.2 Structure of EnS_typeEnergyAdv

The following table shows the parameters of the "EnS_typeEnergyAdv" PLC data type:

Parameter	Data type	Default	Description
voltage1N	REAL	0.0	Momentary voltage between phase 1 and N
voltage2N	REAL	0.0	Momentary voltage between phase 2 and N
voltage3N	REAL	0.0	Momentary voltage between phase 3 and N
voltage12	REAL	0.0	Momentary voltage between phase 1 and 2
voltage23	REAL	0.0	Momentary voltage between phase 2 and 3
voltage31	REAL	0.0	Momentary voltage between phase 3 and 1
current1	REAL	0.0	Momentary current at phase 1
current2	REAL	0.0	Momentary current at phase 2
current3	REAL	0.0	Momentary current at phase 3
frequency	REAL	0.0	Momentary frequency
powerFactor1	REAL	0.0	Current power factor of Phase 1
powerFactor2	REAL	0.0	Current power factor of Phase 2
powerFactor3	REAL	0.0	Current power factor of Phase 3
totalPowerFactor	REAL	0.0	Momentary total power factor
appPower1	REAL	0.0	Current apparent power of Phase 1
appPower2	REAL	0.0	Current apparent power of Phase 2
appPower3	REAL	0.0	Current apparent power of Phase 3
totalAppPower	REAL	0.0	Momentary total apparent power
actPower1	REAL	0.0	Current active power of Phase 1
actPower2	REAL	0.0	Current active power of Phase 2
actPower3	REAL	0.0	Current active power of Phase 3
totalActPower	REAL	0.0	Momentary total active power
reactPower1	REAL	0.0	Current reactive power of Phase 1
reactPower2	REAL	0.0	Current reactive power of Phase 2
reactPower3	REAL	0.0	Current reactive power of Phase 3

Parameter	Data type	Default	Description
totalReactPower	REAL	0.0	Momentary total reactive power
totalAppEnergy	LREAL	0.0	Momentary total apparent energy
totalActEnergy	LREAL	0.0	Momentary total active energy
totalReactEnergy	LREAL	0.0	Momentary total reactive energy
status	WORD	16#FFFF	Status of the extended data

A.4.8 EnS_typeEnergyBasic

A.4.8.1 Description of EnS_typeEnergyBasic

Description

The "EnS_typeEnergyBasic" PLC data type contains basic energy data that are provided for a CPU, an HMI system and archiving, for example:

- Periodically calculated energy consumption
- Average power over the period
- Current values for energy and power consumption

A.4.8.2 Structure of EnS_typeEnergyBasic

The following table shows the parameters of the "EnS_typeEnergyBasic" PLC data type:

Parameter	Data type	Default	Description
actEnergy	REAL	0.0	Momentary energy value
actPower	REAL	0.0	Momentary power value
actEnergyCounter	LREAL	0.0	Current energy counter value
actStatus	WORD	16#FFFF	Status of actual values
energy	REAL	0.0	Cumulative energy value at the end of the archiving period
power	REAL	0.0	Average power value at the end of the archiving period
energyCounter	LREAL	0.0	Energy counter value at the end of the archiving period
status	WORD	16#FFFF	Status of the cumulative energy and average power
syncData	EnS_typeSync (Page 221)	-	Synchronization data

A.4.9 EnS_typeEnergyCounter

A.4.9.1 Description of EnS_typeEnergyCounter

Description

The "EnS_typeEnergyCounter" PLC data type contains an interface between the driver function block for energy counter values "EnS_DrvCounterLInt (Page 187)", "EnS_DrvCounterLReal (Page 189)" and the function block for the periodic calculation of energy data "EnS_CalcEnergyData (Page 179)".

A.4.9.2 Structure of EnS_typeEnergyCounter

The following table shows the parameters of the "EnS_typeEnergyCounter" PLC data type:

Parameter	Data type	Default	Description
value	LREAL	0.0	Energy counter value
normValue	LREAL	0.0	Normalized energy count value
consumerStatus	BOOL	FALSE	Consumer status: TRUE = On, FALSE = Off
status	WORD	16#FFFF	Status of the energy value

A.4.10 EnS_typeEnergyMeta

A.4.10.1 Description of EnS_typeEnergyMeta

Description

The "EnS_typeEnergyMeta" PLC data type contains information about the measuring point. The information is used for display in the CPU or in an HMI system.

A.4.10.2 Structure of EnS_typeEnergyMeta

The following table shows the parameters of the "EnS_typeEnergyMeta" PLC data type:

Parameter	Data type	Default	Value range	Description	HMI [1)]
name	STRING[32]	" "	-	Energy acquisition name	X
plantIdentCode	STRING[128]	" "	-	Plant designation	-
localIdentCode	STRING[128]	" "	-	Location identifier	-
techUnitId	DWORD	0	0 = Not configured	ID for technological unit	-
deviceId	DWORD	0	0 = Invalid 16#0000_0001 - 16#FFFF_FFFF	Device ID for the measuring device	X
parentDeviceId	DWORD	0	0 = Not configured	Device ID of the higher-level measuring device (hierarchy relationship)	X
id	ARRAY[0..9] of HW_IO	0	0 = Not configured	Hardware IDs of the measuring device in the hardware configuration	-
systemParam	ARRAY[0..6] of LREAL	0	-	System parameters for internal use	-
connection-Type[2)]	USINT	0	0 - 16 (see [2)])	Connection type of the measuring device	-
inputType	USINT	0	0 = Invalid 1 = Pulse signal 2 = Energy counter value 3 = Power value 4 = Energy counter value and power value	Type of input signal	X
mode	USINT	0	0 = Invalid 1 = Consumer 2 = Producer	Configuration of the energy flow direction	X
accura-cyVoltConv	REAL	0.0	0.0 = Precision setting is disabled Range of validity: 0.0 - 100.0	Conversion error of the voltage transformer in [%]	-

Parameter	Data type	Default	Value range	Description	HMI [1]
Accuracy-CurrConv	REAL	0.0	0.0 = Precision setting is disabled Range of validity: 0.0 - 100.0	Conversion error of the momentary current transformer in \ [%]	-
Accuracy-Device	REAL	0.0	0.0 = Precision setting is disabled Range of validity: 0.0 - 100.0	Measuring error of the measuring device in [%]	-
accuracyAdd	REAL	0.0	0.0 = Precision setting is disabled Range of validity: 0.0 - 100.0	Additional error factor in [%]	-
Correction-Factor	REAL	0.0	0.0 = Invalid Range of validity: 0.001 - 1d	Correction factor	-
syncPeriod	REAL	900.0	60.0 - 86400.0 (= 1min -1d)	Archiving period in [s]	X
overflowCnt-Value	LREAL	0.0	1.0 - 1.0e+21	Overflow value of the meter	X
normFactorIn	REAL	1.0	0.0 - 9999999.0	Scale factor for input values (same scale factor for energy and power values)	X
normFactorOut	REAL	0.001	0.0 - 9999999.0 (0.001 = Output corresponds to kWh)	Scale factor for output values	X
zeroCut	REAL	0.1	0.0 - 3.402823e+38	Limit for zero point during the energy consumption calculation	X
baseAcqTime	REAL	10.0	0.0 - 3600.0 (1 h) See also EnS_CalcEnergyData (Page 179)	Calculation interval for the instantaneous value of the power consumption in [s]	X
addAcqTime	REAL	10.0	0.0 - 3600.0 (=1h) See also EnS_CalcEnergyData (Page 179)	Dynamic extension of the calculation interval for the instantaneous value of the power consumption in [s]	X
Consumer-StatusEnable	BOOL	FALSE	TRUE = on FALSE = off	Consumer/generator status is active	-
Coordination-Enable	BOOL	FALSE	-	TRUE = Coordination of acyclic communication services is enabled	-
cyclicRd	BOOL	FALSE	-	TRUE = Cyclic reading of acyclic energy data is enabled	-
cyclicTime	REAL	60.0	0.0 - 3600.0 (1 h)	Period for the cyclic reading of acyclic energy data in [s]	-
unitActEnergy[3]	UINT	0	see [3]	Unit for active energy	-
unitActPower[3]	UINT	0	see [3]	Unit for active power	-
unitApp-Energy[3]	UINT	0	see [3]	Unit for apparent energy	-

Parameter	Data type	Default	Value range	Description	HMI [1]
unitAppPower[3]	UINT	0	see [3]	Unit for apparent power	-
unitReact-Energy[3]	UINT	0	see [3]	Unit for reactive energy	-
unitReactPow-er[3]	UINT	0	see [3]	Unit for reactive power	-
unitPower-Factor[3]	UINT	0	see [3]	Unit for power factor	-
unitCurrent[3]	UINT	0	see [3]	Unit for current	-
unitVoltage[3]	UINT	0	see [3]	Unit for voltage	-
unitFrequency[3]	UINT	0	see [3]	Unit of frequency	-
unitAmp-UnbalCurrent[3]	UINT	0	see [3]	Unit for amplitude balance of the cur-rent	-
unitAmp-UnbalVoltage[3]	UINT	0	see [3]	Unit for amplitude symmetry of voltage	-
unitAddValue[3]	ARRAY[0..19]	0	see [3]	Reserved	-
typeAddValue	ARRAY[0..19]	0	0 - 16 (see InputType)	Reserved	-
archiveEnergy	BOOL	FALSE	-	FALSE = Archiving of the energy value deactivated, TRUE = Archiving of the energy value activated	-
archivePower	BOOL	FALSE	-	FALSE = Archiving of the power value deactivated, TRUE = Archiving of the power value activated	-
archiveEner-gyCounter	BOOL	FALSE	-	FALSE = Archiving of the energy coun-ter value deactivated, TRUE = Archiving of the energy coun-ter value activated	-
archive-AddValue	ARRAY[0..19]	0	-	Reserved	-

[1] The selected parameters are assigned the system attribute "Available for HMI" and "Visible in HMI". They are used for operator control and monitoring functions on the HMI device, for example, displaying a current value in a faceplate.

[2] Enumeration for the connection type of the measuring device (Page 223)

[3] Enumeration for units (Page 224)

See also

Parameter status (Page 178)

A.4.11 EnS_typeHMIWriteCtrl

A.4.11.1 Description of EnS_typeHMIWriteCtrl

The EnS_typeHMIWriteCtrl PLC data type contains control information for writing the energy data to the SCADA system.

A.4.11.2 Structure of EnS_typeHMIWriteCtrl

The following table shows the parameters of the "EnS_typeHMIWriteCtrl" PLC data type:

Parameter	Data type	Default	Description	HMI *
req	BOOL	FALSE	Request for writing the energy data to the SCADA system	X
maxItem	UDINT	0	Maximum number of data records in the buffer	X
noItems	UDINT	0	Number of data records written in the SCADA system	X
noDeletedItems	UDINT	0	Number of deleted data records with a buffer overflow	X
writeItems	DINT	0	Write cursor on the data record in the buffer	X
readItems	DINT	0	Read cursor on the data record in the buffer	X
watchdog	UINT	0	Watchdog counter	X

* The highlighted parameters are assigned the system parameters "Accessible for HMI" and "Visible for HMI". The parameters are used for data exchange with the Energy Suite SCADA component.

A.4.12 EnS_typeHMIWriteStat

A.4.12.1 Description of EnS_typeHMIWriteStat

The EnS_typeHMIWriteStat PLC data type contains status information for the writing the energy data to the data log of the SCADA system.

A.4.12.2 Structure of EnS_typeHMIWriteStat

The following table shows the parameters of the "EnS_typeHMIWriteStat" PLC data type:

Parameter	Data type	Default	Description	HMI *
busy	BOOL	FALSE	TRUE = WinCC script: in progress	X
done	BOOL	FALSE	TRUE = Energy data is successfully written to the SCADA system	X
error	BOOL	FALSE	TRUE = Error occurred writing the energy data	X
status	WORD	16#0000	Status of the WinCC script	X
noItems	UDINT	0	Number of written data records	X
readItem	DINT	0	Read cursor on the data record in the buffer	X
writeHMIItem	DINT	0	Write cursor on the data record in the data log	X
watchdog	UINT	0	Watchdog counter	X

* The highlighted parameters are assigned the system parameters "Accessible for HMI" and "Visible for HMI". The parameters are used for data exchange with the Energy Suite SCADA component.

A.4.13 EnS_typeOrgData

A.4.13.1 Description of EnS_typeOrgData

Description

The "EnS_typeOrgData" PLC data type contains higher-level data and settings that all blocks access. In this way, the information can be forwarded with priority to the blocks, for example, an alarm lock.

A.4.13.2 Structure of EnS_typeOrgData

The following table shows the parameters of the "EnS_typeOrgData" PLC data type:

Parameter	Data type	Default	Description
startup	BOOL	TRUE	TRUE = Startup is active
messageSuppress	BOOL	FALSE	TRUE = Alarm suppression
currTimeStamp	DT	-	Current time stamp (UTC format)

A.4.14 EnS_typeSync

A.4.14.1 Description of EnS_typeSync

Description

The "EnS_typeSync" PLC data type contains all the information about the archiving period including the synchronization pulse.

A.4.14.2 Structure of EnS_typeSync

The following table shows the parameters of the "EnS_typeSync" PLC data type:

Parameter	Data type	Default	Description	HMI *
syncPeriod	REAL	900.0	Archiving period in [s]	X
syncTime	REAL	0.0	Remaining time of the archiving in [s]	X
syncPulse	BOOL	FALSE	Synchronization pulse	-
syncTimeStamp	DT	DT#1990-01-01-00:00:00.0	Time stamp of the synchronization pulse	X
error	BOOL	FALSE	1 = Error	-
status	WORD	16#0000	Error status information	-

* The selected parameters become the system parameters "Available for HMI" and "Visible for HMI". They can be used for operator control and monitoring functions on the HMI.

A.4.15 EnS_typeValue

A.4.15.1 Description of EnS_typeValue

Description

The "EnS_typeValue" PLC data type contains all the information of periodically acquired energy data to be archived, for example, to the data log. The global data block EnS_BufferDB (Page 206)" consists of an ARRAY of the "EnS_typeValue" PLC data type.

A.4.15.2 Structure of EnS_typeValue

The following table shows the parameters of the "EnS_typeValue" PLC data type:

Parameter	Data type	Default	Description	HMI *
tagname	STRING[48]	" "	Tag name	X
value	LREAL	0.0	Periodic energy value	X
timeStamp	Date_And_Time	DT#1990-01-01-00:00:00.0	Time stamp of the periodic energy value	X
status	WORD	16#0000	Status of the periodic energy value	X

A.5 Definition of enumerations

A.5.1 Enumeration for the connection type of the measuring device

The following table shows the enumeration for the connection type of the measuring instrument:

Number	Connection type
0	Not defined
1	1 phase
2	1 phase - 3 phase (symmetrical)
3	3 phases (symmetrical)
4	3 phases + N (asymmetrical) without voltage transformer / with 3 current transformers 3P4W
5	3 phases + N (asymmetrical) with voltage transformer / with 3 current transformers 3P4W
6	3 phases + N (symmetrical) without voltage transformer / with 1 current transformer 3P4WB
7	3 phases + N (symmetrical) with voltage transformer / with 1 current transformer 3P4WB
8	3 phases (asymmetrical) without voltage transformer / with 3 current transformers 3P3W
9	3 phases (asymmetrical) with voltage transformer / with 3 current transformers 3P3W
10	3 phases (asymmetrical) without voltage transformer / with 3 current transformers 3P3W
11	3 phases (asymmetrical) with voltage transformer / with 2 current transformers 3P3W
12	3 phases (symmetrical) without voltage transformer / with 1 current transformer 3P3WB
13	3 phases (symmetrical) with voltage transformer / with 1 current transformer 3P3WB
14	2 phases + N (asymmetrical) without voltage transformer / with 2 current transformers 3P4W
15	1 phase + N without voltage transformer / with 1 current transformer 1P2W
16	3 phases + N (asymmetrical) with voltage transformer / with 3 current transformers 3P3W

A.5.2 Enumeration for units

The following table shows the enumeration for the units:

Number	Unit
Electrical units	
0	Not defined
1209	A
1210	kA
1240	V
1242	kV
1241	MV
1186	W
1190	kW
1189	MW
1188	GW
1175	Wh
1179	kWh
1178	MWh
1177	GWh
1342	%
1077	Hz
Non-electrical units	
1034	m^3
1573	Nm^3
1038	l
1041	hl
1088	kg
1092	t
32800	pcs
1598	m^3/h
1590	Nm^3/h
1353	l/h
1635	hl/h
1324	kg/h
1328	t/h
32801	pcs/h

Energy Suite blocks - Load management

B

B.1 Overview of Energy Suite blocks for load management

How Energy Suite load management blocks work

The load management program is constructed in a modularized way, so that for each function can be decided to in-/exclude it and supply it separately.

However, a set of functions are vital for the basic functionality of the load management.

- A basic function set consists of a Forecast block, a Control block, an Actor block and the Backup/Restore block.
- For the centralized storage concept, two data blocks are included, the LmgtGeneralData DB for the general data and the ActorList DB for actor related data.

The Forecast block gets his input data from an acquisition object of an infeed, which is not part of the load management scope, but from the energy suite.

The following picture shows how the Energy Suite load management blocks work:

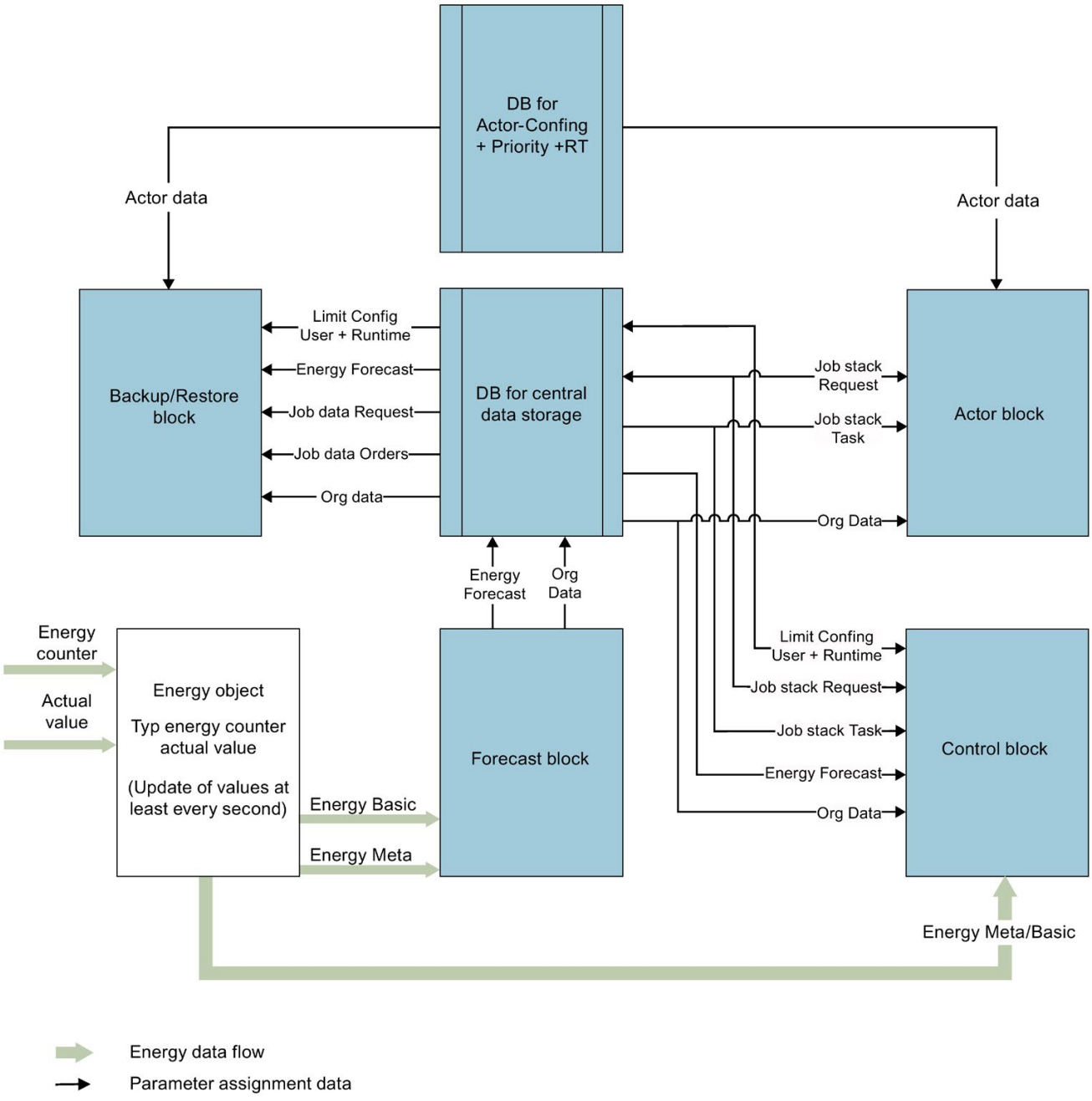

Function blocks

Name	Function
EnS_LmgtForecast_x (Page 228)	Forecast functionality for infeed energy data.
EnS_LmgtControl_Peak (Page 230)	Control logic for peak load management. Calculation and evaluation of limits. Handling job data for actors.
EnS_LmgtActor_x (Page 237)	Feedback, status and control functionality.
EnS_LmgtBackupRestore (Page 252)	Logging of limit violations and switching actions. Backup and restore functionality for config data.

Data blocks

Name	Function
EnS_LmgtGeneralData (Page 258)	Central data storage for parameters, status, job data and control information of load management
EnS_LmgtActorList (Page 259)	Parameters, config data and priority list of actors

User-defined data types

Name	Function
EnS_typeActorElement (Page 260)	Data structure for one actor
EnS_typeLmgtActorMeta (Page 261)	Actor meta data
EnS_typeLmgtActorParameter (Page 261)	Parameters of actor
EnS_typeLmgtActorParameterSet (Page 262)	Parameter set for one actor
EnS_typeLmgtActorStatus (Page 263)	Status information and actual values of actor
EnS_typeLmgtActorStatusInOut (Page 264)	Feedback and control values of actor
EnS_typeLmgtAlarmElement (Page 265)	Data of alarms and messages
EnS_typeLmgtControlLimitConfig (Page 265)	Limit configuration of basic LMGT functions
EnS_typeLmgtControlParameters (Page 266)	Data of control parameters
EnS_typeLmgtControlParameterSet (Page 266)	Set of control parameters
EnS_typeLmgtControlTimeConfig (Page 267)	Time configuration of basic LMGT functions
EnS_typeLmgtForecastValues (Page 267)	Forecast energy data for load management
EnS_typeLmgtGeneralData (Page 268)	General data
EnS_typeLmgtJobFeedbackElement (Page 269)	Job feedback data from actor
EnS_typeLmgtJobRequestElement (Page 270)	Job request data to actors
EnS_typeLmgtJobRequestStack (Page 271)	Data for request stack
EnS_typeLmgtJobTaskElement (Page 271)	Task data to actors
EnS_typeLmgtJobTaskStack (Page 272)	Data for Task stack
EnS_typeLmgtOrganisation (Page 272)	Period related data for load management
EnS_typeLmgtTriggerBR (Page 273)	Trigger information for backup-restore block
EnS_typeLmgtVisualization (Page 273)	Data for visualization

See also

Function blocks (Page 228)

Data blocks (Page 258)

User-defined data types (UDTs) (Page 260)

B.2 Function blocks

B.2.1 EnS_LmgtForecast_x

B.2.1.1 Description of EnS_LmgtForecast_x

Description

The function block EnS_LmgtForecast_x calculates the forecast for average power and energy value at the end of the periode of the infeed, which is used as a basis for the load management.

Different algorithms shall be implemented for the forecast, which can be chosen by the user to optimize the accuracy of the load management to minimize the number of switching activities and optimize the forecast precision as early as possible in the period. For each algorithm a distinct FB shall be implemented, with "x" serving as placeholder for the abbreviation of the algorithm which is used in the FB.

Forecast algorithms

Forecast extension	Description (Algorithm)
LinExt	Linear extrapolation

Linear extrapolation

The energy and average power values are calculated with an extrapolation function.

Square regression

TBD (V16)

Startup

The block has no start-up characteristics.

But the forecast can only be calculated after the synchronization periode is up to date and valid. This is done by evaluation of the status of the infeed Acquistion Object (EnO).

Reaction to error

When an error occurs, the output parameter "error" is set. The "Status (Page 229)" parameter contains additional error information.

B.2.1.2 Parameters of EnS_LmgtForecast_x

The following table shows the function block "EnS_LmgtForecast_x":

Parameter	Decla-ration	Data type	Default	Description
infeedEnergyBasic	I	"EnS_typeEnergyBasic"		Basic energy structure of the infeed acquisition object
infeedEnergyMeta	I	"EnS_typeEnergyMeta"		Meta energy structure of the infeed acquisition object
error	O	Bool	False	TRUE: Rising edge informs that an error occurred during the execution of the FB
status	O	Word	16#0	Current status of FB
forecastValues	IO	"EnX _typeLmgtForecastValues"		Structure containing the forecastvalues

B.2.1.3 Parameter status

The following table shows the error codes that are generated at the "status" output parameter when errors occur:

Error code (W#16#...)	Description
0000	Done status value
8004	Error status for wrong input variables

B.2.2 EnS_LmgtControl_Peak

B.2.2.1 Description of Block EnS_LmgtControl_Peak

Description

The function block EnS_LmgtControl_Peak contains the core functionality of the load management.

It monitors the forecast of energy and power values upon limit violations to determine the escalation / de-escalation of actors, to ensure that the actual power demand remains below the defined limit.

The forecast data are delivered by EnS_LmgtForecast_x and is provided in the 'EnS_LmgtData.energyForecast' structure.

The LMGT control block identifies the power demand, which must be escalated to avoid a limit violation or which power can be deescalated until the current power limit.

An escalation can result in either shedding actors, to reduce power demand, or by switching on generators, to provide more power in the system.

A de-escalation means additional consumers can be switched on, or generators can be disconnected from the grid, to use the remaining power until the current power limits.

The decision, which actors are deactivated or activated, is taken by each instance of EnS_LmgtActor_x individually, due to its actual condition, priority and parameter setting.

Configuration mode

The load management control block has two sets of configuration data, the parameterSet_1 and the parameterSet_2.

The input parameter 'parameterSet' defines which parameters shall be used for the load management.

- User configuration: parameterSet = '1'

  → parameterset1 are used as current configuration set
- Runtime configuration: parameterSet = '2'

  → parameter set2 are used as current configuration set

Differential power / available energy until the end of the period

The LMGT calculates the current differential power and energy, which will be available at the end of the period, based on the forecast energy/ power values and the remaining time of the period.

The differential power is calculated from the average power forecast and the power limit. The active power limit is determined by a percentage value from the absolut power limit value, to get a security gap.

- Differential power:

  Available power = power limit – average power forecast

The available energy is calculated from the forecast for the sum of energy until the end of the period and the energy limit. The active energy limit is determined by a percentage value from the absolut energy limit value, to get a security gap.

- Available energy:

  Available energy = (energy limit * limit Percentage) – energy forecast.

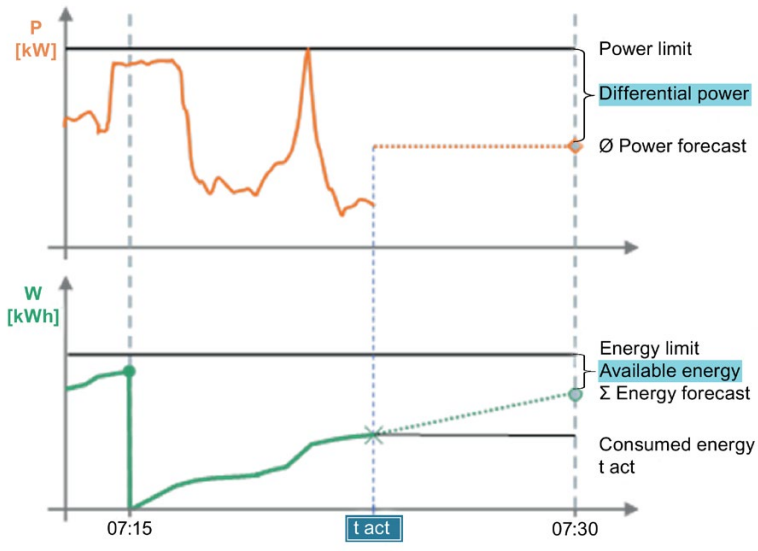

Limit monitoring

The configured energy limits (warning, alarm and limit violation) of the forecast value are monitored.

The power limit, which is configured by the user, will be converted to an internal energy power limit:

- The limit warning is set, when the yellow warning limit is reached.
- The limit alarm is set, when the red alarm limit is reached.

If the forecast of the limit is violated (see peak), the LMGT starts to escalate actors, to reduce the power consumption (or to increase power production) to avoid a limit violation at the end of the period.

The limit (red dashed line) can be reduced by a percentage value (black dashed line) (limitPercentage) as threshold. This value will be used as the active limit for escalation and de-escalation.

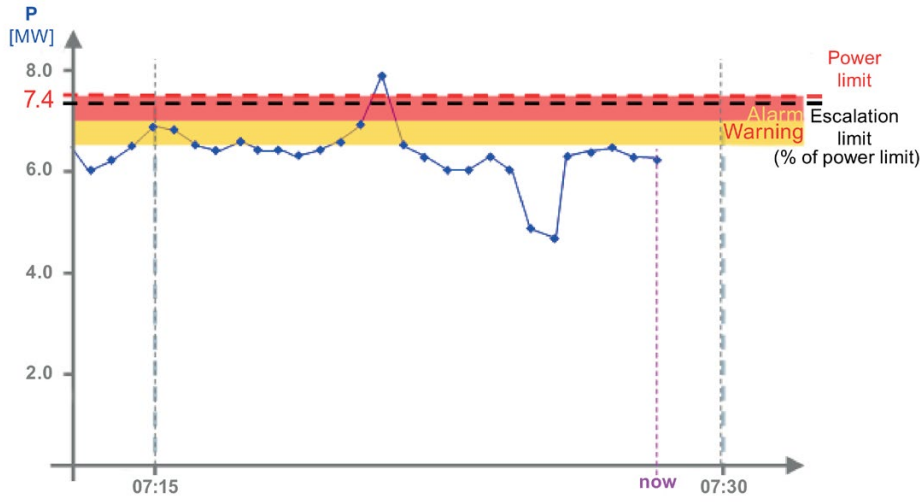

Suppression delay duration

The limit monitoring is deactivated at the beginning of the period until the suppression delay duration has been elapsed.

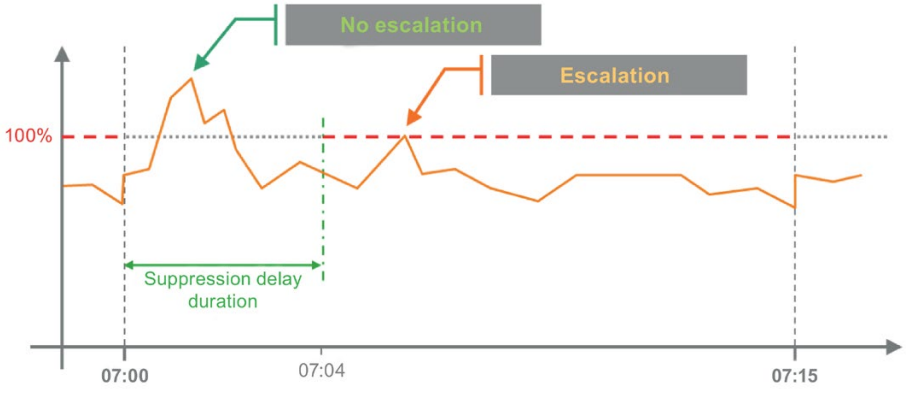

Limit tolerance

At the beginning of the period the accuracy of the calculated forecast values tends to be very unprecise and could lead to frequent, unnecessary switching of actors.

To avoid or improve this behaviour the limit can be raised with the parameter ‘limitToleranceStartValue’ for a defined time ‘limitToleranceDuration'.

The limit tolerance duration will start after the suppression delay duration.

- limitToleranceStartValue:

  Start value for the limit tolerance in percent (200% means, twice the limit value at the beginning).

  The active limit (limitConfig.avgPower) of the LMGT is set to this value at the end of the suppression delay duration (Begin of limit monitoring and linear ramp down).

- limitToleranceDuration:

  Time duration for the limit tolerance

  The active limit of the LMGT is ramped down linearly from the start limit to the limit for the period within the configured time, so that the active limit is reached, when the limit tolerance duration time has been elapsed.

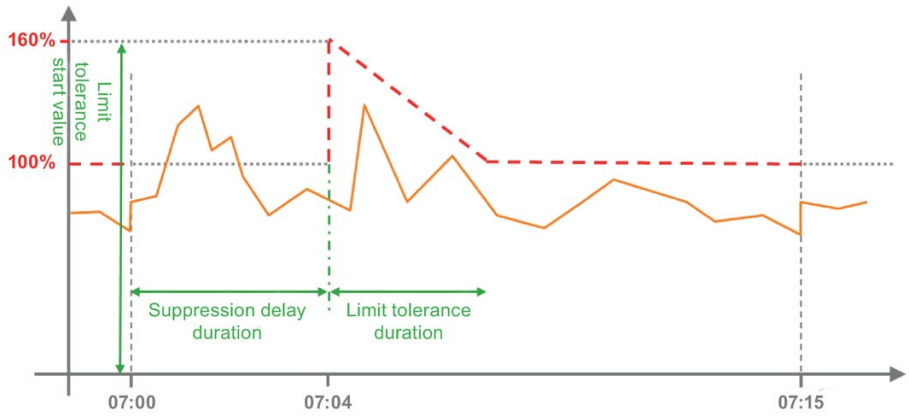

Escalation

If the energy forecast exceeds the configured limit for the period, the LMGT determines the required power which must be disconnected or connected (in case of producer), to fall below the limit.

The LMGT control block sends a job request with the (delta) energy, which shall be escalated.

- Energy consumer: switched OFF
- Energy producer: switched ON

De-escalation

If the energy forecast is below the configured limit for the period, the LMGT determines the differential power which can be connected for approximating to the limit.

The LMGT control block sends a job request with the (delta) energy, which shall be deescalated.

- Energy consumer: switched ON
- Energy producer: switched OFF

Stabilization time

After switching, i.e. sending a job for escalation or de-escalation, the next job is only started after the stabilization time is elapsed.

The purpose of this time is to allow the system to react on the job. If the demand still is pending, after the stabilization delay has elapsed, a new job with the updated demand is sent.

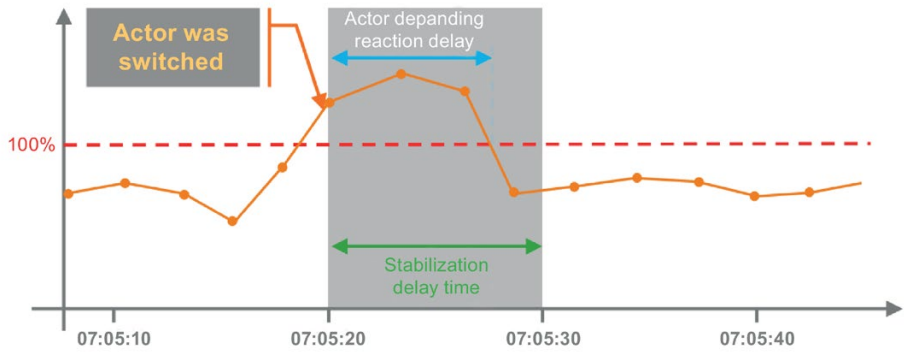

Limit violation

When a limit violation at the end of the period occurs (i.e. no actor can be deactivated) the logging of the runtime and configuration data is triggered.

The load management data and the actor configuration are copied to a file on the SD card of the PLC.

For details see Function block EnS_LmgtBackupRestore which also includes the logging functionality.

Startup

After restart of the PLC the load management is initialized and inactive until the next synchronization period begins, and valid infeed data are available, i.e. no escalation or de-escalation is performed.

Escalation or de-escalation shall only be requested, when the stabilization delay time has been elapsed.

All alarm messages are reset.

The determination of available power and energy values already take place.

Reaction to error

When an error occurs, the output parameter "error" is set. The "Status (Page 235)" parameter contains additional error information.

B.2.2.2 Parameters of EnS_LmgtControl_Peak

The following table shows the function block "EnS_LmgtControl_Peak":

Parameter	Declaration	Data type	Default	Description
enableLmgt	I	Bool	FALSE	State of load management; FALSE: Inactive; TRUE: Active
infeedEnergy-Basic	I	"EnS_typeEnergyBasic"		Basic energy structure of the infeed acquisition object
infeedEnergy-Meta	I	"EnS_typeEnergyMeta"		Meta energy structure of the infeed acquisition object
error	O	Bool	FALSE	TRUE: Rising edge informs that an error occurred during the execution of the FB
status	O	Word	16#0000	Current status of FB
lmgtData	IO	"EnS_typeLmgtGeneralData"		All relevant data of the configured load management

B.2.2.3 Parameter status

The following table shows the error codes that are generated at the "status" output parameter when errors occur:

Error code (W#16#...)	Description
0000	Status value for DONE
7000	Faultless
8001	Control is not called in a Cyclic Interrupt OB
8002	Wrong OB interval
8200	Parameter ‘Mode’ invalid
8201	Error in parameter dynamic parameter limit (power value >= 0; percentage values >= 0 and < 100)
8202	Error in parameter dynamic parameter time (LimitToleranceStartValue >= 0; time values >= 0 and < snycPeriod)
8203	Error in parameter permanent parameter limit (power value >= 0; percentage values >= 0 and < 100)
8204	Error in parameter permanent parameter time (LimitToleranceStartValue >= 0; time values >= 0 and < snycPeriod)
8400	Error in internal ENO status
8401	Error in Forecast
9000	LMGT system is not enabled
9001	Limit violation occurred
9002	Lack of Actors event occured

Messages

The messages are implemented with the instruction ‘Program_Alarm’. The different messages a multi-instance of the Program_Alarm block can be found in the static variables.

Message ID	Message text	Message class
8001	The FB is called in the wrong OB. It needs to be a cyclic interrupt OB.	0
8002	The cyclic interrupt OB which calls the FB has a cylic time larger than 1 second.	0
8200	Invalid value (>1) of the parameter 'parameterSet' in the parameter sets.	0
8201	Invalid value for at least one limit parameter in the dynamic parameter set.	0
8202	Invalid value for at least one time parameter in the dynamic parameter set.	0
8203	Invalid value for at least one limit parameter in the permanent parameter set.	0
8204	Invalid value for at least one time parameter in the permanent parameter set.	0
8400	Error in the infeed acquisition object.	0
8401	Invalid forecast values.	0
9000	Peak load management deactivated.	0
9001	Average power limit was exceeded.	0
9002	No actors are available for escalation.	0
9003	Average power warning threshold reached.	0
9004	Average power alarming threshold reached.	0

B.2.3 EnS_LmgtActor_x

B.2.3.1 Description of EnS_LmgtActor_x

Description

The function block EnS_LmgtActor_x contains the functionality of an actor for evaluation of status, feedback and control logic considering the job information, which the EnS_LmgtControl_x provides regarding the delta energy, which is required to stay below the limit until the end of the period.

Different types shall be implemented for the actor, regarding which kind of type the actor is.

For each type a distinct FB shall be implemented, with “x” serving as placeholder for the actor type.

Actor types

Actor type	Description
Consumer	Consumes power/ energy while switched on, Releases power on escalation
Producer	Produce power/ energy while switched on, Provides power on escalation

Configuration mode

The load management actor block has two sets of configuration data, the parameter set1 and the parameter set2.

The input parameter ‘parameterSet’ defines which parameters shall be used for the load management.

- User configuration: parameterSet 1 = ‘1’

  → parameterSet 1 are used as current configuration set
- Runtime configuration: parameterSet 2= ‘2’

  → parameterSet 2 are used as current configuration set

You can activate either Parameter set1 or Parameter set2 based on the requirements from the Load management runtime faceplates.

Priority list

The priority list contains the information about the sequence, in which actors shall be escalated and de-escalated. The sequence of the actors is determinend during runtime and can be changed at any time, assuming the actor is de-escalated. The action then will instantly take effect.

Priority

The actors are switched in a sequence, which is given by the priority list.

- Priority “0” - Disables the actor for respective Load management system.
- Priority “1” is the highest priority (Lowest priority from the process point of view).

Priority order for escalation is ascending (e. g. 1,2,3, …), so actors with a low priority number (e. g. 1) are escalated before these with higher numbers, and therefore escalateded more often.

Priority order for de-escalation is descending (e. g. 3, 2, 1), so actors with a high priority number (e.g. 10) are de-escalted before those with a low priority number (because they are more relevant for the process).

Note

At any time, only one actor/ group from the current priority will be escalated. If an actor (priority) was switched the program will continue with the next priority from the priority list. (The actors of only one rolling ID are escalated at the same time within a rolling sequence. -> Several actors can have the same prio & rollID)

Priority groups

Actors with the same priority (priority) and rolling sequence identifier (rollingIdentifier) belong to a priority group and are always switched at the same time (in the same cycle).

Rolling sequence

Actors with the same priority (priority) and different rolling sequence identifiers (rollingIdentifier) belong to a rolling sequence. Actors are switched alternating, whereas actors with the same rolling sequence identifier are switched at the same time (in the same cycle).

Procedure

Each actor instance checks its status and the request stack for incoming jobs at its call. The actor then determines autonomously, due to the parameters and current state, if he can serve the request. The result of the determination is written back into the request stack, as feedback for the LMGT Control block and the next actor will be called.

In the next cycle the LMGT Control block will evaluate the feedback from the actors and will write a corresponding job into the task stack.

This task includes the priority and rolling ID, as well as the energy which should be de-/escalated. Each actor instance checks if it is part of this priority and rolling ID, and performs the switching action, if so.

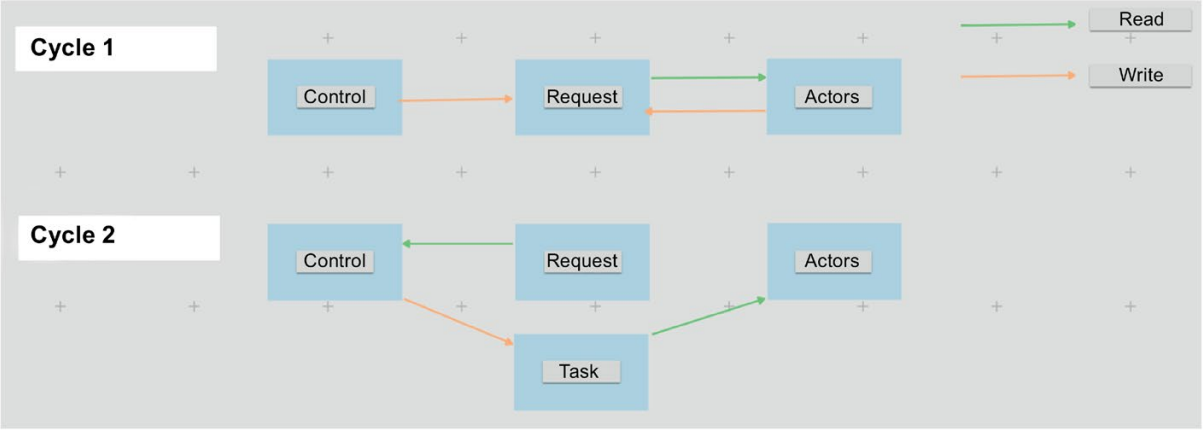

Switching sequence example

- Start with priority number 1 (Highest priority)
- Consider priority:
  Example:
  Actor 1: priority = 1, rollingIdentifier = 1 → switching order = 1
  Actor 2: priority = 2, rollingIdentifier = 1 → switching order = 2
  Actor 3: priority = 10, rollingIdentifier = 1 → switching order = 3
- Consider priority group:
  Actors in a priority group (rolling sequence identifier = 1)
  Example:
  Actor 1: priority = 5, rollingIdentifier = 1 → switching order = 1
  Actor 2: priority = 5, rollingIdentifier = 1 → switching order = 1
  Actor 3: priority = 5, rollingIdentifier = 1 → switching order = 1
- Consider priority group and rolling sequence:
  Actors in a priority group and different rolling sequence identifier
  Example:
  Actor 1: priority = 5, rollingIdentifier = 2 → switching order = 2
  Actor 2: priority = 5, rollingIdentifier = 1 → switching order = 1
  Actor 3: priority = 5, rollingIdentifier = 3 → switching order = 3
- Actors in a priority group and the same rolling sequence identifier
  Example:
  Actor 1: priority = 5, rollingIdentifier = 2 → switching order = 2
  Actor 2: priority = 5, rollingIdentifier = 2 → switching order = 2
  Actor 3: priority = 5, rollingIdentifier = 1 → switching order = 1

Power / energy values

The power and energy values, which are required for the escalation and de-escalation logic, are written to the structure ‘status’ in the EnS_ActorConfig DB.

- actPower:

  Actual power value, which is derived from the feedback (feedbackBoolean / feedbackAnalog) and / or the typical power

- escalationEnergy:

  Energy value which is available for escalation (considering connect / disconnect times and dead times)

- deescalationEnergy:

  Energy value which is available for de-escalation (considering connect / disconnect times and dead times)

actPower = actual Power (input actPower) or typical/ standby Power (from configuration) de-/ escalationEnergy = forecast Energy – Energy limit (active limit)

Feedback

Four different types of feedback are supported for the actor:

1. Power value: Actual power value (fedAnalog) shall be considered, when acknowledging escalation / de-escalation.
2. Acquisition object: Feedback from an acquisition object of the Energy Suite.
3. Switch status: The switch status (fedBoolean) delivers the on / off status of the actor. The configured typical/ standby power value shall be considered, when acknowledging escalation / de-escalation.
4. No feedback: The feedback is determined by the block assuming the status as the control output (ctrlBoolean). The configured typical power value (typical/ standby Power) will be considered, when acknowledging escalation / de-escalation.

Escalation

Different commands are set depending on the actor types (actorType), when an escalation request (jobType = 1) has been received and the block gets the order that the actor shall escalate:

1. Consumer: Disconnect (controlBoolean = FALSE)
2. Producer: Connect (controlBoolean = TRUE)

De-escalation

Different commands are set depending on the actor types (actorType), when a de-escalation request (jobType = 2) has been received and the block gets the order that the actor shall de-escalate:

1. Consumer: Connect (controlBoolean = TRUE)
2. Producer: Disconnect (controlBoolean = FALSE)

Partial load functionality

With the parameter “partialConsumption” the partial load functionality of an Actor can be enabled. That means that the power demand or the power supply of the actor can be varied (0 - 100%). The actor calculates the remaining power or the exceeding power amount which is as close as possible to the power limit and will reduce/ expand power consumption accordingly.

This variable power value is internally handled as percentage value, so in case of a priority group of actors with different nominal power each actor determines the absolute value accordingly.

The partial load function will only be used by the last actor of the priority group in the task job, if it is a partial load actor. Otherwise the actor will be switched at once.

Connect and disconnect times

For the switching of actors minimum connect time (minDeescalationTime), minimum disconnect time (minEscalationTime) and maximum disconnect time (maxEscalationTime) have to be considered.

- Minimum connect time → relevant for escalation

The minimum connect time is the minimum time, which the actor has to be connected. The actor can only be disconnected after the minimum connect time has elapsed.

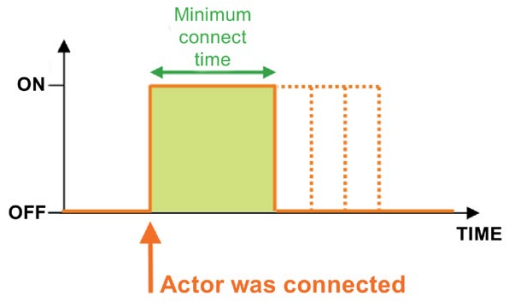

If the minimum connect time has not yet elapsed, for the energy / power calculations the difference (minConnectTime – connectTime) has to be subtracted from the remaining time in the period (statusLmgt.infeedEnergyBasic.syncData.syncTime) to get the correct available energy / power values which can be escalated.

Remaining time (until disconnect allowed) = minConnectTime - connectTime

Remaining time (for energy / power calculations) = statusLmgt.infeedEnergyBasic.syncData.syncTime - (minConnectTime – statusActor.connectTime)

Minimum disconnect time → relevant for de-escalation

The minimum disconnect time is the minimum time, which the actor has to be disconnected. The actor can only be connected after the minimum disconnect time has elapsed.

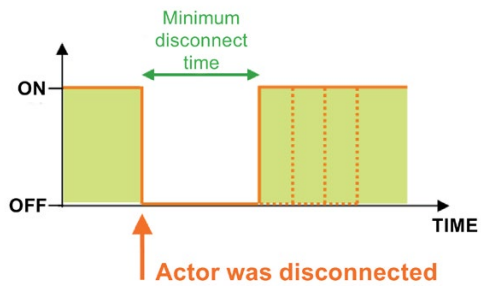

If the minimum disconnect time has not yet elapsed, for the energy / power calculations the difference (minDisconnectTime – disconnectTime) has to be subtracted from the remaining time in the period (statusLmgt.infeedEnergyBasic.syncData.syncTime) to get the correct available energy / power values which can be de-escalated.

Remaining time (until connect allowed) = minDisconnectTime - disconnectTime

Remaining time (for energy / power calculations) = statusLmgt.infeedEnergyBasic.syncData.syncTime - (minDisconnectTime – disconnectTime)

Maximum disconnect time → relevant for escalation

The maximum disconnect time is the maximum time, which the actor can be disconnected. The actor has to be connected after the maximum disconnect time has elapsed.

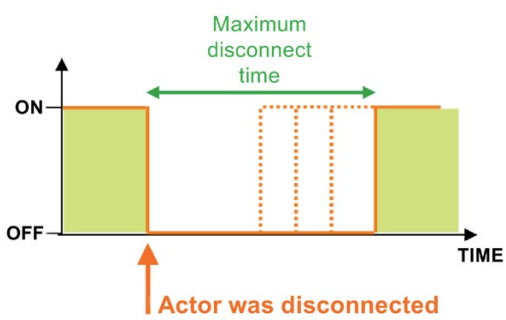

If the maximum disconnect time has not yet elapsed, for the energy / power calculations the difference (maxDisconnectTime – disconnectTime) has to be subtracted from the remaining time in the period (statusLmgt.infeedEnergyBasic.syncData.syncTime) to get the correct available energy / power values which can be escalated.

Remaining time (until reconnect forced) = maxDisconnectTime - disconnectTime

Remaining time (for energy/ power calculations) = statusLmgt.infeedEnergyBasic.syncData.syncTime - (maxDisconnectTime – disconnectTime)

- Maximum disconnect time → relevant for escalation

The maximum disconnect time is the maximum time, which the actor can be disconnected. The actor will be re-connected automatically after the maximum disconnect time has been elapsed.

Dead time for escalation

The dead time (escalationDelayTime) shall be considered for each actor to determine the amount of energy, which can be contributed by escalating the actor. If the delay time is greater than zero, the escalation gets effective only after this delay time. This results in less energy, which the actor can contribute to the LMGT.

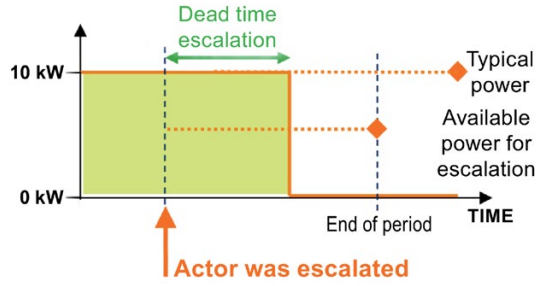

For the energy / power calculations the escalationDelayTime has to be subtracted from the remaining time in the period.

Dead time for de-escalation

The dead time (deescalationDelayTime) shall be considered for each actor to determine the amount of energy, which is added after deescalating the actor. If the delay time is greater than zero, the de-escalation gets effective only after the delay time. This results in less energy, which the actor consumes after activating it.

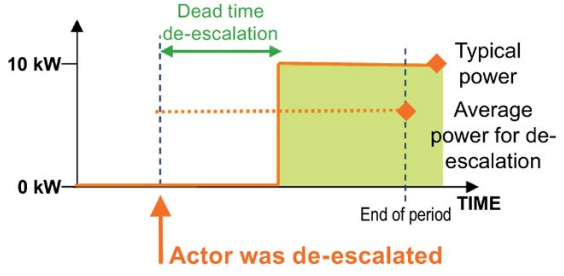

For the energy / power calculations the deescalationDelayTime has to be subtracted from the remaining time in the period.

Job management

Escalation and de-escalation requests are received as jobs within the LMGT system. The block must be able to evaluate the jobs and the parameters of the LMGT system and reacts accordingly. For more details see section Job Concept - De-/ Escalation sequence (Page 246).

Startup

The block “EnS_LmgtActor_x” has no start up characteristic.

Reaction to error

When an error occurs, the output parameter "error" is set. The "Status (Page 245)" parameter contains additional error information.

B.2.3.2 Parameters of EnS_LmgtActor_x

The following table shows the function block "EnS_LmgtActor_Peak":

Parameter	Declaration	Data type	Default	Description
id	I	UInt	0	Identifier of actor; number of data storage for the actor in the actor list
enableActor	I	Bool	False	Release for the actor to participate the load management; FALSE: Inactive; TRUE: Active
fedBoolean	I	Bool	False	The boolean feedback for the actor to identify the result of a switching action
fedAnalog	I	Real	0.0	The analog feedback for the actor to identify the result of a switching action [kW]
hwFault	I	Bool	False	Error indicator from the connected switching hardware; TRUE = error in device
hwStatus	I	Word	16#0	Status information from an intelligent device; could indicate an error
actorEnergyBasic	I	"EnS_typeEnergyBasic"	-	Basic energy structure of an acquisition object
actorEnergyMeta	I	"EnS_typeEnergyMeta"	-	Energy Meta structure of an acquisition object
ctrlBoolean	O	Bool	FALSE	The signal to switch a binary actor; TRUE = switch off
ctrlAnalog	O	Real	0.0	The set point consumption for the actor [kW]
error	O	Bool	FALSE	TRUE: Rising edge informs that an error occurred during the execution of the FB
status	O	Word	16#0000	Current status of FB
actorList	IO	Array[*] of "EnX_typeLmgtActor-Element"	-	Load management configuration data
lmgtData	IO	"EnX_typeLmgtGeneral-Data"	-	All relevant data of the configured load management

B.2.3.3 Parameter status

The following table shows the error codes that are generated at the "status" output parameter when errors occur:

Error code (W#16#...)	Description
8601	ERROR_WRONG_OB
8602	ERROR_INTERRUPT_TOO_LONG
8201	ERROR_PARAM_ID
8211	ERROR_PARAM_ACTOR_TYPE
8212	ERROR_PARAM_ACQ_TYPE
8213	ERROR_PARAM_CTRL_TYPE
8221	ERROR_PARAM_AUTO_POWER_LEVEL
8222	ERROR_PARAM_AUTO_PRIO
8231	ERROR_PARAM_MANU_POWER_LEVEL
8232	ERROR_PARAM_MANU_PRIO
8001	ERROR_OP_MODE_WRONG
8002	ERROR_PAR_MODE_WRONG

Messages

The messages are implemented with the instruction ‘Program_Alarm’. The different messages a multi-instance of the Program_Alarm block can be found in the static variables.

Message ID	Message text	Message class
8001	Wrong operating mode	0
8002	Wrong parameter mode	0
8003	Cannot change priority when actor is escalated	0
8201	Wrong parameter ID	0
8211	Wrong configuration: actor type	0
8212	Wrong configuration: acquisition type	0
8213	Wrong configuration: control type	0
8214	Wrong loop index	
8221	Wrong parameter configuration pararmeter set1: power level	0
8222	Wrong parameter configuration pararmeter set1: priority	0
8223	Wrong parameter configuration pararmeter set1 : rolling ID	0
8224	Wrong parameter configuration pararmeter set1 : partial consumption	
8225	Invalid value for atleast one time parameter in pararmeter set1	
8226	Actor disabled for load management, parameter set1: priority 0	
8231	Wrong parameter configuration pararmeter set2 is used : power level	0
8232	Wrong parameter configuration pararmeter set2: priority	0
8233	Wrong parameter configuration pararmeter set2: rolling ID	0
8234	Wrong parameter configuration pararmeter set2 : partial consumption	
8235	Invalid value for atleast one time parameter in pararmeter set2	
8236	Actor disabled for load management, parameter set2: priority 0	
8401	Hardware feedback signal does not correspond actor state	
8601	Block call in wrong OB	0
8602	Interrupt time of OB too long	0

B.2.3.4 Job Concept - De-/ Escalation sequence

This is a simplified description how a job will be handled thru the different steps, while the program will process a de-/ escalation job.

Request sequence

1. The forecast energy and power values are calculated by the ‘EnS_LmgtForecast’ block and are written into the ‘forecastValues’ structure in the ‘EnS_LmgtGeneralData’ DB.
2. The ‘EnS_LmgtControl’ block calculates the delta energy from the forecast values and the current energy limits (due to the current parameter set). This can either be a negative value, if the forecast is higher than the limit or a positive value if the forecast is lower than the limit.
3. The control block creates a new ‘jobNumber’, sets the corresponding ‘jobType’ and ‘deltaEnergy’ value and writes it into the requestStack structure.

   Note

   This value is always positive! The information if this ‘deltaEnergy’ must be escalated or deescalated is evaluated via the ‘jobType’!

4. Each actor checks if a new job was created by the control block (‘jobNumber’ is different to previous one). If so, the actor evaluates his status and writes his feedback data into the ‘actorFeedback’ structure with the following logic:
   - If there is still an empty job field, or his priority is higher than the existing ones, insert feedback data.
   - If the same priority and rollingID already exists, add own energy value to the ‘availEnergy’ in the list.
   - If priority already exists but rollingID is different, check if ‘countEscalated’ value is higher than own one, then insert feedback data.

Task sequence

In the following cycle all actors have performed their feedback sequence and the control block can evaluate the data from last cycle.

1. The control block checks all ‘availEnergy’ from the feedback structure.
   - If the available energy is zero, then the case of ‘LackOfActors’ occurred, because no actor was able to provide energy for the requested job.
   - Otherwise the datasets from the requestStack are copied to the taskStack. This will be done until the sum of available (order) energy is equal or higher (Escalation) or below (Deescalation) then the delta energy.
2. Each actor checks the ‘taskStack’ if a new task was created by the control block (‘jobNumber’ different to previous one). If so, the actor checks, if he is part of the priority and rollingID of the job task and performes the switching due to the ‘jobType’ (de-/escalation).

The request and task sequence are independent from each other and will be performed in every cycle.

Example

Description

Following there is a simplified example of a job request for an escalation.

The table of the request stack shows not all entries (to focus on the important values).

Also, the case of partitial load is not considered in this example.

Presentation: Step by Step of an escalation request (jobType = 1) for 100 kW.

Given that:

- 10 Actors with 3 priorities and 3 rolling IDs are configured
- Presentation of actor list, request stack

Condition:

- There is no request/ task active (very first run)
- All actors are enabled and switched on

Status and parameters of actors

Aktor ID	Priority	Rolling ID	P/E	Condition	Enabled
1	3	3	10	ON	YES
2	2	1	20	ON	YES
3	1	1	30	ON	YES
4	1	3	40	ON	YES
5	1	2	50	ON	YES
6	3	1	50	ON	YES
7	3	2	40	ON	YES
8	1	2	30	ON	YES
9	2	2	20	ON	YES
10	2	1	10	ON	YES

Request stack (initial)

			ACTR _Feed-back [0..9]				
Job _Number	Job_Type	P/E_to _de _escalate	Priority	RollingID	Count _Escalated	Count _De-escalated	P/E _available
1	1	100	-	-	-	-	-
			-	-	-	-	-
			-	-	-	-	-
			-	-	-	-	-

Request stack (progress, after each actor call)

1. The first actor writes his data into the empty request stack.

			ACTR _Feed-back [0..9]				
Job _Number	Job_Type	P/E_to _de _escalate	Priority	RollingID	Count _Escalated	Count _De-escalated	P/E _available
1	1	100	3	3	0	0	10

2. The second actor has a higher priority, so he copies the existing data into the second data set and writes his data in the first data set.

			ACTR _Feed-back [0..9]				
Job _Number	Job_Type	P/E_to _de _escalate	Priority	RollingID	Count _Escalated	Count _De-escalated	P/E _available
1	1	100	2	1	0	0	20
			3	3	0	0	10

3. The third actor has a higher priority than that one in the first data set, so he shifts all data one data set further and writes his data in the first data set.

			ACTR _Feed-back [0..9]				
Job _Number	Job_Type	P/E_to _de _escalate	Priority	RollingID	Count_Esc alated	Count _De-escalated	P/E _available
1	1	100	1	1	0	0	30
			2	1	0	0	20
			3	3	0	0	10

4. The forth actor has the same priority than the first one, but a lower rolling ID, therefore this actor skips further actions.

			ACTR _Feed-back [0..9]				
Job _Number	Job_Type	P/E_to _de _escalate	Priority	RollingID	Count _Escalated	Count _De-escalated	P/E _available
1	1	100	1	1	0	0	30
			2	1	0	0	20
			3	3	0	0	10

5. The fifth actor also has the priority "1" with a lower rolling ID than the existing one, so this actor also skips any further actions.

			ACTR _Feed-back [0..9]				
Job _Number	Job_Type	P/E_to _de _escalate	Priority	RollingID	Count _Escalated	Count _De-escalated	P/E _available
1	1	100	1	1	0	0	30
			2	1	0	0	20
			3	3	0	0	10

6. The sixth actor has the priority "3" with rolling ID "1", so he will overwrite the existing data from actor ID 1.

			ACTR _Feed-back [0..9]				
Job _Number	Job_Type	P/E_to _de _escalate	Priority	RollingID	Count _Escalated	Count _De-escalated	P/E _available
1	1	100	1	1	0	0	30
			2	1	0	0	20
			3	1	0	0	50

7. The seventh actor also has the priority "3" but with the lower rolling ID "2", so the actor skips further actions.

			ACTR _Feed-back [0..9]				
Job _Number	Job_Type	P/E_to _de _escalate	Priority	RollingID	Count _Escalated	Count _De-escalated	P/E _available
1	1	100	1	1	0	0	30
			2	1	0	0	20
			3	1	0	0	50

8. The eighth actor has the priority "1" with the lower rolling ID "2". So the actor skips further actions.

			ACTR _Feed-back [0..9]				
Job _Number	Job_Type	P/E_to _de _escalate	Priority	RollingID	Count _Escalated	Count _De-escalated	P/E _available
1	1	100	1	1	0	0	30
			2	1	0	0	20
			3	1	0	0	50

9. The ninth actor has the priority “2” with rolling ID “2”. There is already a priority group with an higher priority in the list, so this actor skips his entry.

			ACTR _Feed-back [0..9]				
Job _Number	Job_Type	P/E_to _de _escalate	Priority	RollingID	Count _Escalated	Count _De-escalated	P/E _available
1	1	100	1	1	0	0	30
			2	1	0	0	20
			3	1	0	0	40

10. The tenth actor has the priority “2” with rolling ID “1”. An entry of this priority group already exists in the request stack, so the energy/ power will be added to that entry.

			ACTR _Feed-back [0..9]				
Job _Number	Job_Type	P/E_to _de _escalate	Priority	RollingID	Count _Escalated	Count _De-escalated	P/E _available
1	1	100	1	1	0	0	30
			2	1	0	0	30
			3	1	0	0	50

Status of actors after job has been finished

In total 110W will be escalated (request 100W), due to the actor priority grouping.

Aktor ID	Priority	Rolling ID	P/E	Condition	Enabled
1	3	3	10	ON	YES
2	2	1	20	OFF	YES
3	1	1	30	OFF	YES
4	1	3	40	ON	YES
5	1	2	50	ON	YES
6	3	1	50	OFF	YES
7	3	2	40	ON	YES
8	1	2	30	ON	YES
9	2	2	20	ON	YES
10	2	1	10	OFF	YES

At the end of the PLC cycle, when all actor instances have been processed, the request stack contains the ten actors sorted according their priority and rolling ID.

In the next cycle the control block then can copy step by step the data sets into the task stack until the power demand is fulfilled.

In the next cycle the actors will also consider the task stack and will switch accordingly the entries.

B.2.4 EnS_LmgtBackupRestore

B.2.4.1 Description of EnS_LmgtBackupRestore

Description

The function block EnS_LmgtBackupRestore provides the functionality to write logging/ configuration data to the SD-Card of the PLC. In case of a limit violation, switching action or a lack of actors, configuration data and runtime data is written to an appropriate file under the folder “UserFiles” onto the memory card.

Also the block safes and restores configuration data of the actors and load management system, in this folder on the SD-Card by user command.

Logging

Limit violation

When the LmgtControl block recognizes a limit violation at the end of the period, he triggers the logging of the current data from the "EnS_LmgtGeneralData" and "EnS_ActorList". The corresponding data is read out and written to the SD-Card of the PLC.

The data will be stored under ‘UserFiles/’ in the file named "<LMGT name>_LimitViol_xxx.bin". The events will be written continuously into the file. If the maximum size of the file (16 MB) is reached, a new file will be created with incremented file number xxx. Each new dataset begins with the timestamp of the event.

The maximum number of files can be selected by the input parameter ‘amountLogFiles’.

Switching action

When ever a switching action is performed by one of the LmgtAcotor blocks, the relevant data from the "EnS_LmgtGeneralData" and "EnS_ActorList" is read out and written to the SD-Card of the PLC. This logging is triggered from the LmgtControl block with the command "trigSwitching" within the structure "triggerBackupRestore" in the "EnS_LmgtGeneralData" DB.

The data will be stored under ‘UserFiles/’ in the file named "<LMGT name>_SwitchEvnt_xxx.bin". The events will be written continuously into the file. If the maximum size of the file (16 MB) is reached, a new file will be created with incremented file number xxx. Each new dataset begins with the timestamp of the event.

Lack of Actors

When the control block wants to escalate a job but there is no appropriate feedback from the actors, this event is handled as ‘Lack of actors’. That means no actor can handle this request and a limit violation will occure if this status will stay.

This event can occure due to wrong settings of the actors, priority list or general parameters. This event will be logged under ‘UserFiles/’ in the file named ‘<LMGT name>_LackActors_xxx.bin’. The events will be written continuously into the file. If the maximum size of the file is reached, a new file will be created with incremented file number xxx. Each new dataset begins with the timestamp of the event.

The maximum number of files can be selected by the input parameter ‘amountLogFiles’.

Backup & restore

The user can create a backup of the current configuration data.

When saving the configuration in the SCADA system or on trigger (input parameter backup = TRUE) the LMGT configuration with all RT parameters comprising general, infeed and actor settings will be archived. The backup will be stored on a remanent location on the PLC (memory card of the PLC).

The configuration can be restored by setting the input parameter restore.

Backup

When the command ‘triggerBackup’ is triggered, the current configuration of the actors and the load management will be read out and saved into a backup file on the SD-Card of the PLC.

The file will be stored under ‘UserFiles/’ name ‘<LMGT name>_ConfigBackup.bin’.

Restore

When the command ‘trigRestore’ is triggered a new configuration will be read out from the backup file, which has to be stored on the SD-Card of the PLC, and overwrites the current one.

Prerequisits

To restore a backup file from the SD-Card back to the LMGT Configuration the following prerequisites have to be fulfilled.

- A backup file named ‘LMGT_ConfigBackup’ has to be stored under ‘UserFiles/’ on the memory card of the PLC
- The file must be of a binary format which match the internal data structure (generation with the provided converter tool)

⚠ CAUTION
The System can not analyse or check the restore file about correct data. If the restore file is loaded into the system, the config data will be written into the parameter sections and will take effect immediately!

Characteristics

Due to performance reasons of the PLC, the files are written in a binary form. The data can be converted with a supplied converting tool to get a readable structure (CSV file).

File generation

Depending of the trigger, different files will be created by the EnS_LmgtBackupRestore block.

- Limit violation – File with name ""<LMGT name>_LimitViol_xxx.bin"
- Switching action – Filename with name "<LMGT name>_SwitchgEvnt_xxx.bin"
- Backup configuration – Filename "<LMGT name>_ConfigBackup.bin"

  (Only one file is generated, file will be overwritten)

  With xxx as consecutive number until the maximum number of files, defined by the input parameter ‘amountLogFiles’.

Access to files

The generated files can be accessed by using the web server of the PLC. Therefore the web server has to be activated under the device configuration, General - Web server.

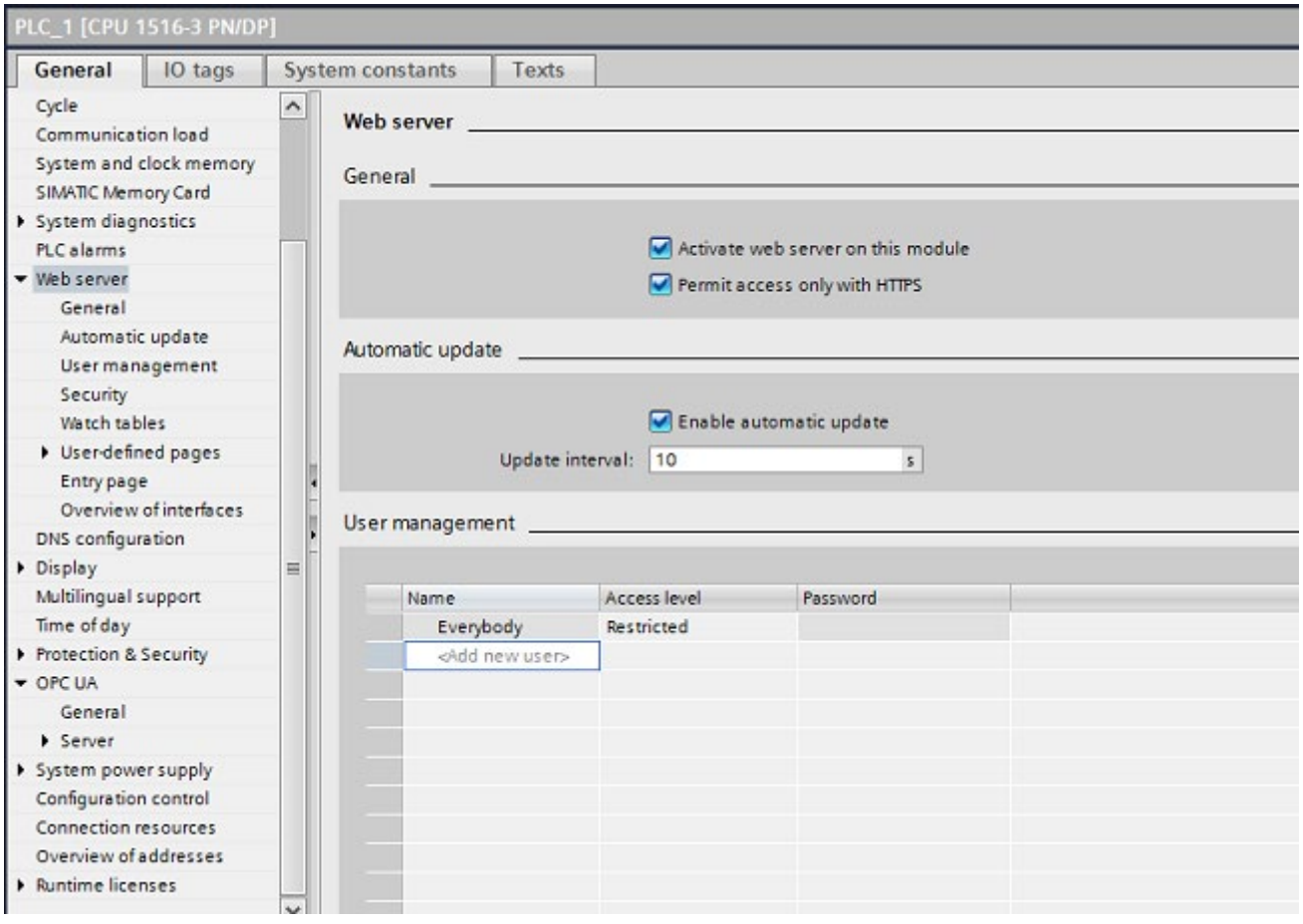

CAUTION

Created files from the system should not be deleted by the user! Because of the consecutive data writing of the backup & restore function, otherwise, the system will not know where to continue. This will lead to errors and abort the logging function for further execution.

And at least the rights for read, write, delete files must be given in the user management.

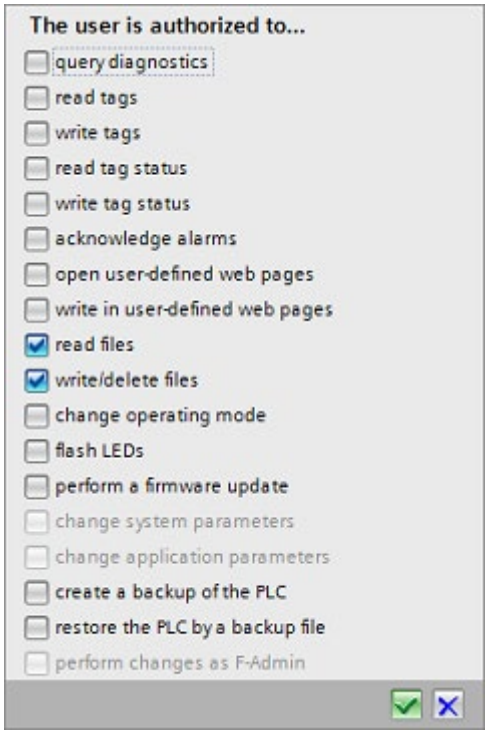

Reaction to error

When an error occurs, the output parameter "error" is set. The "Status (Page 257)" parameter contains additional error information.

B.2.4.2 Parameters of EnS_LmgtBackupRestore

The following table shows the function block "EnS_LmgtBackupRestore":

Parameter	Decla-ration	Data type	Default	Description
triggerBackup	I	Bool	false	Input for triggering backup command
triggerRestore	I	Bool	false	Input for triggering restore command
amountLogFiles	I	UInt	10	Amount of log files for each log file type
busy	O	Bool	false	Block is busy
error	O	Bool	false	Error occured while processing
status	O	Word	16#0	Detail information of error
mode	O	USInt	0	Actual processing mode
lmgtData	IO	"EnX_typeLmgtGeneralData"		Loadmanagement general data struct
actorConfig	IO	"EnX_typeLmgtActorList"		Actor configuration data struct

B.2.4.3 Parameter status

The following table shows the error codes that are generated at the "status" output parameter when errors occur:

Error code (W#16#...)	Description
80B3	There is not enough space on the memory card
80B4	The memory card or file is write-protected
80C3	The maximum number of simultaneously active FileWriteC instructions has already been reached
8091	Corresponding backup-file (Userfile\LMGT name) not found on SD-Card
8093	Error in corresponding log file. New log file was created
8094	The maximum length of the log file is reached

B.3 Data blocks

B.3.1 EnS_LmgtGeneralData

B.3.1.1 Description of EnS_LmgtGeneralData

Description

The data block "EnS_LmgtGeneralData" contains the major data for the load management.

B.3.1.2 Structure of EnS_LmgtGeneralData

Description

The data block "EnS_LmgtGeneralData" contains the major data for the load management

Element	Data type	Description
parameterSets	"EnX_typeLmgtControlParameters"	Configuration data of the complete load management
forecastValues	"EnX_typeLmgtForecastValues"	Forecast values for average power and energy at the end of the period
requestStack	"EnX_typeLmgtJobRequestStack"	Interface of Control and Actors for job requests
taskStack	"EnX_typeLmgtJobTaskStack"	Interface of Control and Actors for job tasks
escalatedPriorities	Array[1..100] of Bool	Each index shows one priority. TRUE = One or more actors of the priority is currently escalated
orgData	"EnX_typeLmgtOrganisation"	Time data of the period
triggerBackupRestore	"EnX_typeLmgtTriggerBR"	Trigger variables for logging functionality
criticalAlarms	Array[0..9] of "EnX_typeLmgtAlarmElement"	Buffer for the last 10 critical alarms
visualization	"EnX_typeLmgtVisualization"	Configuration data of the complete load management
parameterSets	"EnX_typeLmgtControlParameters"	Forecast values for average power and energy at the end of the period

B.3.2 EnS_LmgtActorList

B.3.2.1 Description of EnS_LmgtActorList

Description

The global data block "EnS_ActorList" contains the parameters, config data and priority list of all actors.

B.3.2.2 Structure of EnS_LmgtActorList

Description

The following table shows the structure of the data block "EnS_ActorList":

Element	Data type	Description
Actors	EnS_typeLmgtActorList	Array of max. amount of actors with the corresponding data

B.4 User-defined data types (UDTs)

B.4.1 EnS_typeActorElement

B.4.1.1 Description of EnS_typeActorElement

Description

The type contains the data structure of one actor.

B.4.1.2 Structure of EnS_typeActorElement

Description

The following table shows the parameters of the "EnS_typeActorElement" PLC data type:

Parameter	Data type	Default	Description
operationMode	USInt	0	0 = Automatic mode, actor works according commands of control block; 1 = actor ignores commands of the control block
manualCommand	Bool	False	Disconnect the actor in manual operation mode: 1 = escalate actor
metaData	"EnX_typeLmgtActorMeta"		Actor meta data
parameter	"EnX_typeLmgtActorParameter"		Parameters of actor
status	"EnX_typeLmgtActorStatus"		Status information and actual values of actor

B.4.2 EnS_typeLmgtActorMeta

B.4.2.1 Description of EnS_typeLmgtActorMeta

Description

The type contains the meta data of the actor.

B.4.2.2 Structure of EnS_typeLmgtActorMeta

Description

The following table shows the parameters of the "EnS_typeLmgtActorMeta" PLC data type:

Parameter	Data type	Default	Description
name	String[32]	‘Actor name’	Name of actor
plantIdentCode	String[32]	‘’	Plant identification code
localIdentCode	String[32]	‘’	Local identification code
uniqueID	UDInt	0	Unique identification for position of actor
unitPower	UInt	1190	Unit of power value according to Energy Suite
actorType	USInt	0	Actor type: 0 =Not valid, 1 = Consumer, 2 = Producer
acquisitionType	USInt	0	Acquisition type: 0 = No actor available, 1 = Analog power value is connected, 2 = Switch state is connected, 3 = No feedback
controlType	USInt	0	Control output type: 0 = No actor available, 1 = Analog control is connected, 2 = Boolean control is connected

B.4.3 EnS_typeLmgtActorParameter

B.4.3.1 Description of EnS_typeLmgtActorParameter

Description

The type contains the parameters of one actor.

B.4.3.2 Structure of EnS_typeLmgtActorParameter

Description

The following table shows the parameters of the "EnS_typeLmgtActorParameter" PLC data type:

Parameter	Data type	Default	Description
parameterSet	USInt	1	1 = pararmeter set1 is used 2 = pararmeter set2 is used
parameterSet_1	"EnX_typeLmgtActorParameterSet"		pararmeter set1 is used
parameterSet_2	"EnX_typeLmgtActorParameterSet"		pararmeter set2 is used

B.4.4 EnS_typeLmgtActorParameterSet

B.4.4.1 Description of EnS_typeLmgtActorParameterSet

Description

The type contains one set of parameters for the actor.

B.4.4.2 Structure of EnS_typeLmgtActorParameterSet

Description

The following table shows the parameters of the "EnS_typeLmgtActorParameterSet" PLC data type:

Parameter	Data type	Default	Description
priority	UInt	1	Priority of the actor for de-/escalation, 1 = highest priority
rollingIdentifier	UInt	1	Rolling number of the actor in the group
typicalPower	Real	0.0	Typical load of the actor
standbyPower	Real	0.0	Standby load of the actor
partialConsumption	Bool	false	Possibility of partial consumption by actor
minDeescalationTime	UInt	0	Minimum deescalation time in [s]
minEscalationTime	UInt	0	Minimum escalation time in [s]
maxEscalationTime	UInt	0	Maximum escalation time in [s]
escalationDelayTime	UInt	0	Time the actor needs to escalate in [s]
deescalationDelayTime	UInt	0	Time the actor needs to deescalate in [s]

B.4.5 EnS_typeLmgtActorStatus

B.4.5.1 Description of EnS_typeLmgtActorStatus

Description

The type contains the status information and actual values of the actor.

B.4.5.2 Structure of EnS_typeLmgtActorStatus

Description

The following table shows the parameters of the "EnS_typeLmgtActorStatus" PLC data type:

Parameter	Data type	Default	Description
connectionStatus	Word	16#0	Connection status of the actor
actPower	Real	0.0	Actual power consumption of the actor
escalationEnergy	Real	0.0	Energy available for escalation
deescalationEnergy	Real	0.0	Energy available for de-escalation
countEscalated	ULInt	0	Counter for switching
countDeescalated	ULInt	0	Counter for switching
connectTime	UDInt	0	Current connect time in [s]
disconnectTime	UDInt	0	Current disconnect time in [s]
inOutVariables	"EnX_typeLmgtActorStatusInOut"		The current status of the in/out variables for logging

B.4.6 EnS_typeLmgtActorStatusInOut

B.4.6.1 Description of EnS_typeLmgtActorStatusInOut

Description

The type contains the Feedback and control values of an actor.

B.4.6.2 Structure of EnS_typeLmgtActorStatusInOut

Description

The following table shows the parameters of the "EnS_typeLmgtActorInOut" PLC data type:

Parameter	Data type	Default	Description
enableActor	Bool	false	TRUE: Actor is available for switching; FALSE: Actor is ignored by LMGT system
fedBoolean	Bool	false	TRUE: Feedback signal from hardware shows that actor is ON; FALSE: Feedback signal from hardware shows that actor is OFF
fedAnalog	Real	0.0	Feedback power value from hardware in [kW]
fedEnOActPower	Real	0.0	Feedback signal of actor as acquisition object
ctrlBoolean	Bool	false	TRUE: LMGT system signals the actor is ON; FALSE: LMGT system signals the actor is OFF;
ctrlAnalog	Real	0.0	LMGT target value for power value of actor
status	Word	16#0	Status code of actor

B.4.7 EnS_typeLmgtAlarmElement

B.4.7.1 Description of EnS_typeLmgtAlarmElement

Description

The type contains data for the alarming.

B.4.7.2 Structure of EnS_typeLmgtAlarmElement

Description

The following table shows the parameters of the "EnS_typeLmgtAlarmElement" PLC data type:

Parameter	Data type	Default	Description
timestamp	Date_And_Time	DT#1990-01-01-00:00:00	Timestamp of alarm
textListID	UInt	0	ID of textlist entry which contains the alarm message
additionalAlarm-Parameter	Real	0.0	Additional parameter for alarm message, e. g. value of limit violation

B.4.8 EnS_typeLmgtControlLimitConfig

B.4.8.1 Description of EnS_typeLmgtControlLimitConfig

Description

The type contains the limit configuration of the loadmanagement.

B.4.8.2 Structure of EnS_typeLmgtControlLimitConfig

Description

The following table shows the parameters of the "EnS_typeLmgtControlLimitConfig" PLC data type:

Parameter	Data type	Default	Description
avgPower	LReal	0.0	Limit of average power for load management in [kW]
limitPercentage	Real	0.0	Percentage of average power limit which is actually used for switching decisions in [%]
warningPercentage	Real	0.0	Warning threshold of average power limit in [%]
alarmPercentage	Real	0.0	Alarm threshold of average power limit in [%]

B.4.9 EnS_typeLmgtControlParameters

B.4.9.1 Description of EnS_typeLmgtControlParameters

Description

The type contains the parameters for the control block.

B.4.9.2 Structure of EnS_typeLmgtControlParameters

Description

The following table shows the parameters of the "EnS_typeLmgtControlParameters" PLC data type:

Parameter	Data type	Default	Description
parameterMode	USInt	1	1 = pararmeter set1 is used, 2 = parameter set 2 is used
parameterSet_1	EnS_typeLmgtControlParameterSet		pararmeter set1 load management configuration data
parameterSet_2	EnS_typeLmgtControlParameterSet		pararmeter set2 load management configuration data

B.4.10 EnS_typeLmgtControlParameterSet

B.4.10.1 Description of EnS_typeLmgtControlParameterSet

Description

The type contains the configuration of the loadmanagement.

B.4.10.2 Structure of EnS_typeLmgtControlParameterSet

Description

The following table shows the parameters of the "EnS_typeLmgtControlParameters" PLC data type:

Parameter	Data type	Default	Description
limitConfig	EnS_typeLmgtLimitConfig		Limit variables for load management
timeConfig	EnS_typeLmgtTimeConfig		Time variables for load management

B.4.11 EnS_typeLmgtControlTimeConfig

B.4.11.1 Description of EnS_typeLmgtControlTimeConfig

Description

The type contains the time configuration for the loadmanagment.

B.4.11.2 Structure of EnS_typeLmgtControlTimeConfig

Description

The following table shows the parameters of the "EnS_typeLmgtControlTimeConfig" PLC data type:

Parameter	Data type	Default	Description
suppressionDelayDuration	Real	0.0	Duration of the job suppression at the beginning of the synchronization period in [s]
limitToleranceStartValue	Real	100.0	Starting value of the limit tolerance of the average power in [%]
limitToleranceDuration	Real	0.0	Duration of the limit tolerance beginning after the suppression delay time in [s]
stabilizationDelayDuration	Real	0.0	Duration of the stabilization delay time after completing a job in [s]

B.4.12 EnS_typeLmgtForecastValues

B.4.12.1 Description of EnS_typeLmgtForecastValues

Description

The type contains the forecast energy data for the load management.

B.4.12.2 Structure of EnS_typeLmgtForecastValues

Description

The following table shows the parameters of the "EnS_typeLmgtForecastValues" PLC data type:

Parameter	Data type	Default	Description
power	LReal	-1.0	The forecasted average power value at the end of the period
energy	LReal	-1.0	The forecasted energy value at the end of the period
valid	Bool	FALSE	TRUE: forecast values are valid; FALSE: forecast values are invalid

B.4.13 EnS_typeLmgtGeneralData

B.4.13.1 Description of EnS_typeLmgtGeneralData

Description

The type contains the general data for the load management.

B.4.13.2 Structure of EnS_typeLmgtGeneralData

Description

The following table shows the parameters of the "EnS_typeLmgtGeneralData" PLC data type:

Parameter	Data type	Default	Description
parameterSets	"EnS_typeLmgtControlParameters"		Configuration data of the complete load management
forecastValues	"EnS_typeLmgtForecastValues"		Forecast values for average power and energy at the end of the period
requestStack	"EnS_typeLmgtJobRequestStack"		Interface of Control and Actors for job requests
taskStack	"EnS_typeLmgtTaskStack"		Interface of Control and Actors for job tasks
escalatedPriorities	Array[1..100] of Bool		Each index shows one priority. TRUE = One or more actors of the priority is currently escalated
orgData	"EnS_typeLmgtOrganisation"		Time data of the period
triggerBackupRestore	"EnS_typeLmgtTriggerBR"		Trigger variables for logging functionality
criticalAlarms	Array[0..9] of "EnS_typeLmgtAlarmElement"		Buffer for the last 10 critical alarms
visualization	"EnS_typeLmgtVisualization"		Contains relevant variables for the visualization

B.4.14 EnS_typeLmgtJobFeedbackElement

B.4.14.1 Description of EnS_typeLmgtJobFeedbackElement

Description

The type contains the job feedback data from an actor.

B.4.14.2 Structure of EnS_typeLmgtJobFeedbackElement

Description

The following table shows the parameters of the "EnS_typeLmgtJobFeedbackElement" PLC data type:

Parameter	Data type	Default	Description
priority	UInt	0	Priority of actors
rollingID	UInt	0	Rolling ID of actors
countEscalated	ULInt	0	Counter how often the actors were escalated
countDeescalated	ULInt	0	Counter how often the actors were de-escalated
powerEnergyAvailable	LReal	0.0	Amount of power/energy which can be switched by actors

B.4.15 EnS_typeLmgtJobRequestElement

B.4.15.1 Description of EnS_typeLmgtJobRequestElement

Description

The type contains the job request data to the actors.

B.4.15.2 Structure of EnS_typeLmgtJobRequestElement

Description

The following table shows the parameters of the "EnS_typeLmgtJobRequestElement" PLC data type:

Parameter	Data type	Default	Description
priority	UInt	0	Priority of actors
rollingID	UInt	0	Rolling ID of actors
countEscalated	ULInt	0	Counter how often the actors were escalated
countDeescalated	ULInt	0	Counter how often the actors were de-escalated
availEnergy	LReal	0.0	Amount of energy which can be switched by actor
partialConsumption	Bool	false	Partial consumption of actor
actorCounter	Uint	0	Counter how many actors are in the same priority group and rolling ID

B.4.16 EnS_typeLmgtJobRequestStack

B.4.16.1 Description of EnS_typeLmgtJobRequestStack

Description

The type contains the Data for the request stack.

B.4.16.2 Structure of EnS_typeLmgtJobRequestStack

Description

The following table shows the parameters of the "EnS_typeLmgtJobRequestStack" PLC data type:

Parameter	Data type	Default	Description
priority	UInt	0	Priority of actors
rollingID	UInt	0	Rolling ID of actors
orderEnergy	LReal	0.0	Amount of energy which should be switched by actors

B.4.17 EnS_typeLmgtJobTaskElement

B.4.17.1 Description of EnS_typeLmgtJobTaskElement

Description

The type contains the task data to an actor.

B.4.17.2 Structure of EnS_typeLmgtJobTaskElement

Description

The following table shows the parameters of the "EnS_typeLmgtJobTaskElement" PLC data type:

Parameter	Data type	Default	Description
priority	UInt	0	Priority of actors
rollingID	UInt	0	Rolling ID of actors
orderEnergy	LReal	0.0	Amount of energy which should be switched by actors
percentOfUsedEnergy	LReal	0.0	% of energy able to use by actor.
partialConsumption	Bool	false	Partial consumption of actor
actorCounter	UInt	0	Counter how many actors are in the same priority group and rolling ID

B.4.18 EnS_typeLmgtJobTaskStack

B.4.18.1 Description of EnS_typeLmgtJobTaskStack

Description

The type contains the data for the task stack.

B.4.18.2 Structure of EnS_typeLmgtJobTaskStack

Description

The following table shows the parameters of the "EnS_typeLmgtJobTaskStack" PLC data type:

Parameter	Data type	Default	Description
jobNumber	ULInt	0	Continuous job number for identification purposes
jobType	UInt	0	0: No job active; 1: Escalation; 2: De-escalation
actorTask	Array[0..9] of "EnX_typeLmgtJobTaskElement"		Task for the actors

B.4.19 EnS_typeLmgtOrganisation

B.4.19.1 Description of EnS_typeLmgtOrganisation

Description

The type contains periode concerning data for the load management.

B.4.19.2 Structure of EnS_typeLmgtOrganisation

Description

The following table shows the parameters of the "EnS_typeLmgtOrganisation" PLC data type:

Parameter	Data type	Default	Description
periodTime	LReal	0.0	Length of the load management period in [s]
currentPeriodTime	LReal	0.0	Current time of the load management period in [s]
remainingPeriodTime	LReal	0.0	Remaining time of the load management period in [s]

B.4.20 EnS_typeLmgtTriggerBR

B.4.20.1 Description of EnS_typeLmgtTriggerBR

Description

The type contains the triggers for the backup&restore block.

B.4.20.2 Structure of EnS_typeLmgtTriggerBR

Description

The following table shows the parameters of the "EnS_typeLmgtTriggerBR" PLC data type:

Parameter	Data type	Default	Description
trigViolation	Bool	false	TRUE: If limit violation occures at the end of period
trigSwitching	Bool	false	TRUE: If switching opperation was performed
trigLackOfActors	Bool	false	TRUE: If lack of occures occures

B.4.21 EnS_typeLmgtVisualization

B.4.21.1 Description of EnS_typeLmgtVisualization

Description

The type contains the data for the visualization.

B.4.21.2 Structure of EnS_typeLmgtVisualization

Description

The following table shows the parameters of the "EnS_typeLmgtVisualization" PLC data type:

Parameter	Data type	Default	Description
chosenVisuType	UInt	0	0 = Energy, 1 = Power
actPowerInfeed	LReal	0.0	Actual power value of infeed acquisition object
actPowerEnergy	LReal	0.0	Actual energy value of infeed acquisition object
limitEnergykWh	LReal	0.0	Energy limit of LMGT system calculated from average power limit
limitEscalationEnergykWh	LReal	0.0	Actual energy limit including limit percentage
limitEscalationPowerkW	LReal	0.0	Actual power limit including limit percentage
unitPower	UInt	1190	Default value: kW
unitEnergy	UInt	1179	Default value: kWh

Service & Support

C

C.1 Service & Support

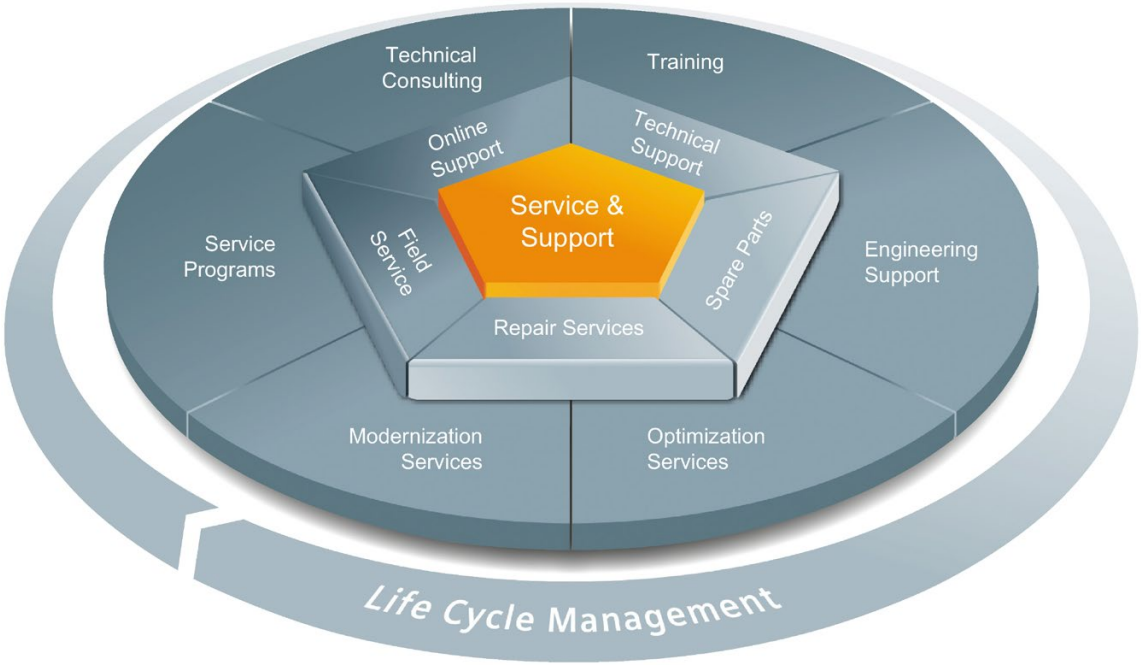

The unmatched complete service for the entire life cycle

For machine constructors, solution providers and plant operators: The service offering from Siemens Industry Automation and Drive Technologies includes comprehensive services for a wide range of different users in all sectors of the manufacturing and process industry.

To accompany our products and systems, we offer integrated and structured services that provide valuable support in every phase of the life cycle of your machine or plant – from planning and implementation through commissioning as far as maintenance and modernization.

Our Service & Support accompanies you worldwide in all matters concerning automation and drive technology from Siemens. We provide direct on-site support in more than 100 countries through all phases of the life cycle of your machines and plants.

You have an experienced team of specialists at your side to provide active support and bundled know-how. Regular training courses and intensive contact among our employees – even across continents – ensure reliable service in the most diverse areas

Online Support

The comprehensive online information platform supports you in all aspects of our Service & Support at any time and from any location in the world.

You can find Online Support on the Internet at the following address: Internet (http://www.siemens.com/automation/service&support).

Technical Consulting

Support in planning and designing your project: From detailed actual-state analysis, definition of the goal and consultation on product and system questions right through to the creation of the automation solution.

Technical Support

Expert advice on technical questions with a wide range of demand-optimized services for all our products and systems.

You can find Technical Support on the Internet at the following address: Internet (http://www.siemens.com/automation/support-request).

Training

Extend your competitive edge – through practical know-how directly from the manufacturer.

You can find the training courses we offer on the Internet at the following address: Internet (http://www.siemens.com/sitrain).

Engineering Support

Support during project engineering and development with services fine-tuned to your requirements, from configuration through to implementation of an automation project.

Field Service

Our Field Service offers you services for commissioning and maintenance – to ensure that your machines and plants are always available.

Spare parts

In every sector worldwide, plants and systems are required to operate with constantly increasing reliability. We will provide you with the support you need to prevent a standstill from occurring in the first place: with a worldwide network and optimum logistics chains.

Repairs

Downtimes cause problems in the plant as well as unnecessary costs. We can help you to reduce both to a minimum – with our worldwide repair facilities.

Optimization

During the service life of machines and plants, there is often a great potential for increasing productivity or reducing costs.

To help you achieve this potential, we are offering a complete range of optimization services.

Modernization

You can also rely on our support when it comes to modernization – with comprehensive services from the planning phase all the way to commissioning.

Service programs

Our service programs are selected service packages for an automation and drives system or product group. The individual services are coordinated with each other to ensure smooth coverage of the entire life cycle and support optimum use of your products and systems.

The services of a Service Program can be flexibly adapted at any time and used separately.

Examples of service programs:

- Service contracts
- Plant IT Security Services
- Life Cycle Services for Drive Engineering
- SIMATIC PCS 7 Life Cycle Services
- SINUMERIK Manufacturing Excellence
- SIMATIC Remote Support Services

Advantages at a glance:

- Reduced downtimes for increased productivity
- Optimized maintenance costs due to a tailored scope of services
- Costs that can be calculated and therefore planned
- Service reliability due to guaranteed response times and spare part delivery times
- Customer service personnel will be supported and relieved of additional tasks
- Comprehensive service from a single source, fewer interfaces and greater expertise

Contact

At your service locally, around the globe: your partner for consultation, sales, training, service, support, spare parts... for the entire range of products supplied by Industry Automation and Drive Technologies.

You can find your personal contact in our contacts database at: Internet (http://www.siemens.com/automation/partner).

Index

A

Actor types, 237
available energy, 231

C

Characteristics, 254
Connect and disconnect times, 241
connect times, 241

D

Dead time for de-escalation, 243
Dead time for escalation, 243
De-escalation, 240
differential power, 231
disconnect times, 241
dynamicParameters
    parameterMode, 230
    parameterSet, 237

E

EnS_LmgtActor_x
    function block, 237
EnS_LmgtBackupRestore
    function block, 252
EnS_LmgtControl_Peak
    function block, 230
EnS_LmgtForecast_x
    Forecast algorithms, 228
    function block, 228
    Linear extrapolation, 228
    Square regression, 228
    Startup, 228
Escalation, 233, 240

F

Feedback, 240
File generation, 254
Forecast algorithms
    EnS_LmgtForecast_x, 228
Forecast extension
    LinExt, 228
function block
    EnS_LmgtActor_x, 237
    EnS_LmgtBackupRestore, 252
    EnS_LmgtControl_Peak, 230
    EnS_LmgtForecast_x, 228

J

Job management, 243

L

Lack of Actors, 253
Limit monitoring, 232
Limit tolerance, 233
Limit violation, 234
    Logging, 252
Linear extrapolation
    EnS_LmgtForecast_x, 228
Logging, 252
    Limit violation, 252

M

Messages, 236, 245

P

parameterMode
    dynamicParameters, 230
    permanentParameters, 230
Parameters of
    EnS_LmgtActor_Peak, 244
    EnS_LmgtBackupRestore, 257
    EnS_LmgtControl_Peak, 235
    EnS_LmgtForecast_x, 229
    EnS_typeActorElement, 260
    EnS_typeLmgtActorInOut, 264
    EnS_typeLmgtActorMeta, 261
    EnS_typeLmgtActorParameter, 261
    EnS_typeLmgtActorParameterSet, 262
    EnS_typeLmgtActorStatus, 263
    EnS_typeLmgtAlarmElement, 265
    EnS_typeLmgtControlLimitConfig, 265

EnS_typeLmgtControlParameters, 266, 266
EnS_typeLmgtControlTimeConfig, 267
EnS_typeLmgtForecastValues, 267
EnS_typeLmgtGeneralData, 268
EnS_typeLmgtJobFeedbackElement, 269
EnS_typeLmgtJobRequestElement, 270
EnS_typeLmgtJobRequestStack, 271
EnS_typeLmgtJobTaskElement, 271
EnS_typeLmgtJobTaskStack, 272
EnS_typeLmgtOrganisation, 272
EnS_typeLmgtTriggerBR, 273
EnS_typeLmgtVisualization, 273
parameterSet
dynamicParameters, 237
permanentParameters, 237
permanentParameters
parameterMode, 230
parameterSet, 237
Power / energy values, 240
power and energy values, 240
Priority, 238
Priority groups, 238
Priority list, 237
Procedure, 238

R

Reaction to error, 228, 234, 243, 256
Rolling sequence, 238

S

Square regression
EnS_LmgtForecast_x, 228
Stabilization time, 234
Startup, 234, 243
EnS_LmgtForecast_x, 228
Structure of
EnS_ActorList, 259
EnS_LmgtGeneralData, 258
Suppression delay duration, 232
Switching action, 252
Switching sequence example, 239