SIEMENS

SIMOTRAS HD

Operating Instructions

6SG70 Series

Microprocessor-controlled 20 kW to 500 kW converters for speed control of slipring motors with stator phase-angle control and electronic phase reversal



Edition 07 - 03.2012

Order No.: 6SG7000-0BA76

These Operating Instructions are available in the following languages:

Language	German
Order No.:	6SG7000-0BA00

Converter software version:

As these Operating Instructions went to print, SIMOTRAS HD converters were being delivered from the factory with software version **3.2** installed.

These Operating Instructions also apply to other software versions.

Earlier software versions: Some parameters described in this document might not be stored in the software (i.e. the corresponding functionality is not available on the converter) or some parameters will have a restricted setting range. If this is the case, however, appropriate reference to this status will be made in the Parameter List.

Later software versions: Additional parameters might be available on the SIMOTRAS HD (i.e. extra functions might be available which are not described in these Operating Instructions) or some parameters might have an extended setting range. In this case, leave the relevant parameters at their factory setting, or do not set any parameter values which are not described in these instructions.

The software version of the SIMOTRAS HD can be read in parameters r060 and r065.

The latest software version is available at the following Internet site:
http://support.automation.siemens.com/WW/view/en/10804957/133100

From software version 1.5, the SIMOREG 6RA70 software also contains the SIMOTRAS HD software.

CAUTION

Before updating your software, find out the product state of your SIMOTRAS HD device. You will find this on the rating plate (field on the bottom left-hand side "Prod. State").

Prod. State = A1,A2 (devices with the CUD1 electronics board, version C98043-A7001-L1-xx):
It is only permissible to load software versions 1.xx and 2.xx.

Prod. State = A3 (devices with the CUD1 electronics board, version C98043-A7001-L2-xx):
It is only permissible to load software versions 3.xx.

The reproduction, transmission or use of this document or contents is not permitted without express written authority. Offenders will be liable for damages. All rights, including rights created by patent grant or registration of a utility model or design, are reserved.

We have checked that the contents of this publication agree with the hardware and software described herein. Nonetheless, differences might exist and therefore we cannot guarantee that they are completely identical. The information given in this publication is reviewed at regular intervals and any corrections that might be necessary are made in the subsequent printings. Suggestions for improvement are welcome at all times.

SIMOTRAS HD ® is a registered trademark of Siemens

© Siemens AG 1999 - 2012 All rights reserved

0 Contents

		Page
1	**Safety information**	1-1
2	**Type spectrum**	2-1
2.1	Converter order no. code	2-2
2.2	Ordering information for options using codes	2-3
3	**Description**	3-1
3.1	Applications	3-1
3.2	Design	3-1
3.3	Mode of operation	3-2
3.3.1	Converter design	3-2
3.3.2	Speed control using stator phase-angle control	3-3
3.3.3	Speed control by changing the rotor resistance levels	3-4
3.3.4	Method of operation of electronic phase reversal with plug braking	3-5
3.3.5	SIMOTRAS HD – control characteristics for lifting gear	3-6
3.3.6	SIMOTRAS HD – control characteristics for travel gear	3-7
3.3.7	Detection of motor speed	3-8
3.4	Technical data	3-9
3.5	Applicable standards	3-15
3.6	Certification	3-15
3.7	Abbreviations	3-15
4	**Shipment, unpacking**	4-1
5	**Installation**	5-1
5.1	Dimension drawings	5-2
5.2	Mounting options	5-8
5.2.1	Terminal expansion board CUD2	5-8
5.2.2	Optional supplementary boards	5-9
5.2.2.1	Local bus adapter (LBA) for mounting optional supplementary boards	5-9
5.2.2.2	Mounting of optional supplementary boards	5-9
6	**Connections**	6-1
6.1	Block diagrams with suggested connection	6-2
6.2	Installation instructions for proper EMC installation of drives	6-6
6.2.1	Fundamental principles of EMC	6-6
6.2.1.1	What is EMC	6-6
6.2.1.2	Noise radiation and noise immunity	6-6
6.2.1.3	Limit values	6-6
6.2.1.4	Using SIMOTRAS HD in an industrial environment	6-7
6.2.1.5	Non-grounded supply systems	6-7
6.2.1.6	EMC planning	6-7
6.2.2	Proper EMC installation of drives (installation instructions)	6-8
6.2.2.1	General	6-8
6.2.2.2	Rules for proper EMC installation	6-8
6.2.2.3	Arrangement of components for converters	6-16

		Page
6.2.2.4	RI suppression filters	6-16
6.3	Parallel connection of converters	6-17
6.3.1	Circuit diagram showing parallel connection of SIMOTRAS converters	6-17
6.3.2	Parameterization of SIMOTRAS converters for parallel connection	6-18
6.4	Power connections	6-19
6.5	Fuses	6-25
6.6	Terminal arrangement	6-26
6.7	Terminal assignments	6-29
6.7.1	Overview of terminal connections on the electronics module C98043-A7001 (CUD1)	6-29
6.7.2	Overview of terminal connections on the optional terminal expansion module C98043-A7006 (CUD2)	6-29
6.7.3	Terminal description	6-30
7	**Start-up**	7-1
7.1	General safety information	7-1
7.2	Operator control panels	7-3
7.2.1	Simple operator control panel (PMU)	7-3
7.2.2	User-friendly operator control panel (OP1S)	7-4
7.3	Parameterization procedure	7-5
7.3.1	Parameter types	7-5
7.3.2	Parameterization at the simple operator control panel	7-6
7.4	Restore factory setting	7-7
7.5	Notes to be read before switching on	7-8
7.6	Start-up procedure	7-9
7.6.1	Access authorization	7-9
7.6.2	Adjustment of converter rated currents	7-9
7.6.3	Adjustment to actual converter supply voltage	7-9
7.6.4	Input of motor data	7-9
7.6.5	Actual speed sensing data	7-10
7.6.5.1	Operation with pulse encoder	7-10
7.6.5.2	Operation with analog tacho	7-10
7.6.6	Speed setpoint data	7-10
7.6.6.1	Operation with analog setpoint	7-10
7.6.6.2	Operation with 4 stage master switch	7-10
7.6.7	Selection of basic technological functions	7-10
7.6.8	Setting the current controller loop	7-11
7.6.9	Checking direction of rotation of the motor	7-12
7.6.10	Setting the speed control loop	7-12
7.6.11	Setting the ramp times of the ramp-function generator	7-13
7.6.12	Setting the brake control	7-14
7.6.13	Setting the start pulse for the speed controller	7-16
7.6.14	Setting of limit value for closed-loop/open-loop operation	7-16
7.6.15	Setting the rotor contactor stepping	7-17
7.6.16	Counter-torque operation and premature switching over from counter-torque stage to start-up stage	7-19
7.6.17	Setting the ramp-down monitoring function	7-20
7.6.18	Setting up setpoint/actual value monitoring	7-20
7.6.19	Setting the setpoint reduction when pre-limit switches are activated	7-21
7.6.20	Documentation of setting values	7-21

		Page
7.7	SIMOTRAS HD troubleshooting table	7-22
7.8	Data for existing drive	7-23
7.9	SIMOTRAS HD – QUICK START INSTRUCTIONS	7-25
7.10	Starting up optional supplementary boards	7-27
7.10.1	Sequence of operations for starting up the T300 technology board	7-27
7.10.2	Sequence of operations for starting up PROFIBUS boards (CBP2)	7-28
7.10.2.1	Mechanisms for processing parameters via the PROFIBUS	7-30
7.10.2.2	Diagnostic tools	7-31
7.10.3	Sequence of operations for starting up CAN bus boards (CBC)	7-35
7.10.3.1	Description of CBC with CAN Layer 2	7-36
7.10.3.2	Description of CBC with CANopen	7-40
7.10.3.3	Diagnostic tools	7-42
7.10.4	Procedure for starting up SIMOLINK boards (SLB)	7-46
7.10.5	Procedure for starting up expansion boards (EB1 and EB2)	7-50
7.10.6	Procedure for starting up the pulse encoder board (SBP)	7-51
7.10.7	Structure of request/response telegrams	7-52
7.10.8	Transmission of double-word connectors for technology and communication modules	7-55
8	**Function diagrams**	8-1
9	**Function descriptions**	9-1
9.1	General explanations of terms and functionality	9-1
9.2	Computation cycles, time delay	9-6
9.3	Commands for switch on, shutdown and disabling of the firing pulses	9-7
9.3.1	Switch-on/shutdown (ON/OFF1): terminal 37 - control word 1, bit 0	9-7
9.3.2	Operating enable: terminal 38 - control word 1, bit 3	9-9
9.3.3	OFF2 (voltage disconnection): control word 1, bit 1	9-10
9.3.4	OFF3 (Fast stop): control word 1, bit 2	9-10
9.4	Commands for specifying setpoints	9-12
9.4.1	Inching	9-12
9.4.2	Crawl	9-13
9.4.3	Fixed setpoint	9-14
9.5	Ramp-function generator	9-14
9.5.1	Definitions	9-15
9.5.2	Operating principle of ramp-function generator	9-15
9.5.3	Control signals for ramp-function generator	9-16
9.5.4	Ramp-function generator settings 1, 2 and 3	9-16
9.5.5	Ramp-up integrator	9-17
9.5.6	Ramp-function generator tracking	9-17
9.5.7	Limitation after ramp-function generator	9-17
9.5.8	Velocity signal dv/dt (K0191)	9-18
9.6	Speed controller	9-18
9.7	Switch on auxiliaries	9-19
9.8	Switch over parameter sets	9-20
9.9	Serial interfaces	9-21
9.9.1	Serial interfaces with USS® protocol	9-22
9.9.2	Serial interfaces with peer-to-peer protocol	9-24
9.10	Thermal overload protection of motor (I^2t monitoring of motor)	9-28
9.11	Automatic restart	9-30

		Page
9.12	Status description of some bits of status word ZSW1	9-31
10	**Faults and alarms**	10-1
10.1	Fault messages	10-2
10.1.1	General information about faults	10-2
10.1.2	List of fault messages	10-2
10.2	Alarm messages	10-15
11	**Parameter list**	11-1
12	**List of connectors and binectors**	12-1
12.1	Connector list	12-1
12.2	Binector list	12-25
13	**Maintenance**	13-1
13.1	Procedure for updating software (upgrading to a new software version)	13-1
13.2	Replacement of components	13-3
13.2.1	Replacement of fan	13-3
13.2.2	Replacement of PCBs	13-7
13.2.3	Replacement of thyristor modules on D400 / 60 – 680 Mre and D500 / 360 Mre converters	13-8
13.2.4	Replacement of fuses and thyristor assemblies on D400 / 900 Mre converters	13-9
14	**Servicing / Spare parts**	14-1
14.1	Servicing	14-1
14.1.1	Europe / World	14-1
14.2	Spare parts	14-2
15	**DriveMonitor**	15-1
15.1	Scope of delivery	15-1
15.2	Installing the software	15-1
15.3	Connecting the SIMOTRAS HD to the PC	15-1
15.4	Setting up an online link to the SIMOTRAS HD	15-2
15.5	Further information	15-2
16	**Environmental compatibility**	16-1
17	**Configuration example**	17-1
17.1	Task	17-2
17.2	Selecting a motor	17-2
17.3	Selecting an actual value sensor	17-2
17.4	Selecting a rotor resistor	17-3
17.5	Selecting a SIMOTRAS HD converter	17-6
17.6	Selecting the contactors	17-6
17.7	Selecting a master switch	17-6
18	**Appendix**	18-1
18.1	Compatibility with SIMOTRAS HE (6GA4625 series)	18-1
	Feedback	18-5

1 Safety information



WARNING

Hazardous voltages and rotating parts (fans) are present in this electrical equipment during operation. Non-observance of the safety instructions can result in death, severe personal injury or substantial property damage.

Only qualified personnel should work on or around the equipment after first becoming thoroughly familiar with all warning and safety notices and maintenance procedures contained herein. The successful and safe operation of this equipment is dependent on careful transportation, proper storage and installation as well as correct operation and maintenance.

Definitions:

- QUALIFIED PERSONNEL

  For the purpose of this Instruction Manual and product labels, a "Qualified person" is someone who is familiar with the installation, construction and operation of the equipment and the hazards involved. He or she must have the following qualifications:

  1. Trained and authorized to energize, de-energize, clear, ground and tag circuits and equipment in accordance with established safety procedures.
  2. Trained in the proper care and use of protective equipment in accordance with established safety procedures.
  3. Trained in rendering first aid.

- **⚠ DANGER**

  indicates an imminently hazardous situation which, if not avoided, will result in death or serious injury.

- **⚠ WARNING**

  indicates a potentially hazardous situation which, if not avoided, could result in death or serious injury.

- **⚠ CAUTION**

  used with the safety alert symbol indicates a potentially hazardous situation which, if not avoided, may result in minor or moderate injury.

- **CAUTION**

  used without the safety alert symbol indicates a potentially hazardous situation which, if not avoided, may result in property damage.

- **NOTICE**

  NOTICE used without the safety alert symbol indicates a potentially situation which, if not avoided, may result in an undesireable result or state.

NOTE

These operating instructions do not purport to cover all details or variations in equipment, nor to provide for every possible contingency to be met in connection with installation, operation or maintenance.

Should further information be desired or should particular problems arise which are not covered sufficiently for the purchaser's purposes, the matter should be referred to the local Siemens Sales Office.

The contents of these operating instructions shall not become part or modify any prior or existing agreement, commitment or relationship. The Sales Contract contains the entire obligations of Siemens. The warranty contained in the contract between the parties is the sole warranty of Siemens. Any statements contained herein do not create new warranties or modify the existing warranty.



DANGER

Converters contain hazardous electrical voltages, Death, severe bodily injury or significant material damage can occur if the safety measures are not followed. The following precautions should be taken in order to reduce the risk of death or injury.

1. Only qualified personnel, who are knowledgeable about the converters and the provided information, can install, start up, operate, troubleshoot or repair the converters.
2. The converter must be installed in accordance with the relevant safety regulations (e.g. DIN, VDE), as well as all other relevant national and local regulations. It must be ensured that the grounding, cable dimensioning and appropriate short-circuit protection have been implemented to guarantee operational safety and reliability.
3. All panels and doors must be kept closed during normal operation.



4. Before carrying out visual checks and maintenance work, ensure that the AC power supply is disconnected and locked out. Before the AC supply is disconnected, both converters and motors are at hazardous voltage levels. Even when the converter contactor is open, hazardous voltages are still present.
5. When making measurements with the power supply switched on, electrical connections must not be touched under any circumstances. Remove all jewellery from wrists and fingers. Ensure that the test equipment is in good conditions and operationally safe.
6. When working on units which are switched on, stand on an insulating surface, i.e. ensure that you are not grounded.
7. Carefully follow the relevant instructions and observe all danger, warning and cautionary instructions.
8. This does not represent a full listing of all the measures necessary for safe operation of the equipment. If you require other information or if certain problems occur which are not handled in enough detail in the information provided in the Instruction Manual, please contact your local Siemens office.

CAUTION

Operating the unit in the immediate vicinity (< 1.5 m) of mobile telephones with a transmitter power of > 1 W may lead to incorrect operation of the unit.

CAUTION

Electrostatically sensitive devices

The converter contains electrostatically sensitive devices. These can easily be destroyed if they are not handled correctly. If, however, it is absolutely essential for you to work on electronic modules, please pay careful attention to the following instructions:

- Electronic modules (PCBs) should not be touched unless work has to be carried out on them.
- Before touching a PCB, the person carrying out the work must be electrostatically discharged. The simplest way of doing this is to touch an electrically conductive earthed object, e.g. socket outlet earth contact.
- PCBs must not be allowed to come into contact with electrically insulating materials – plastic foil, insulating table tops or clothing made of synthetic fibres
- PCBs may only be set down or stored on electrically conducting surfaces.
- When carrying out soldering jobs on PCBs, make sure that the soldering tip has been earthed.
- PCBs and electronic components should generally be packed in electrically conducting containers (such as metallized-plastic boxes or metal cans) before being stored or shipped.
- If the use of non-conducting packing containers cannot be avoided, PCBs must be wrapped in a conducting material before being put in them. Examples of such materials include electrically conducting foam rubber or household aluminium foil.

For easy reference, the protective measures necessary when dealing with sensitive electronic components are illustrated in the sketches below.

a = Conductive flooring
b = Anti-static table
c = Anti-static footwear
d = Anti-static overall
e = Anti-static chain
f = Earthing connections of cabinets

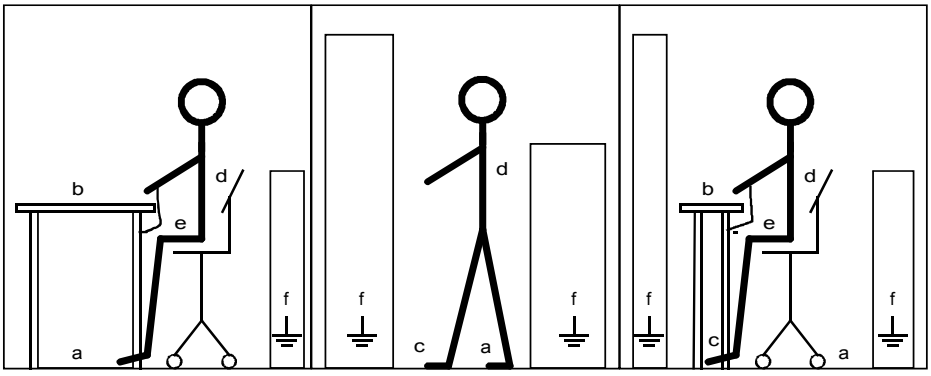

Seated workstation Standing workstation Standing/seated workstation

WARNING

Hazardous voltage are present in this electrical equipment during operation.

Non-observance of the safety instructions can result in death, severe personal injury or substantial property damage.

Only qualified personnel should work on or around the equipment after first becoming thoroughly familiar with all warning and safety notices and maintenance procedures contained herein.

The successful and safe operation of this equipment is dependent on careful transportation, proper storage and installation as well as correct operation and maintenance.

2 Type spectrum

Converter order no.	Type designation
6SG7050 – 0EB60 - 0	D400 / 60 Mre
6SG7052 – 0EB60 - 0	D400 / 78 Mre
6SG7055 – 0EB60 - 0	D400 / 98 Mre
6SG7060 – 0EB60 - 0	D400 / 112 Mre
6SG7062 – 0EB60 - 0	D400 / 142 Mre
6SG7065 – 0EB60 - 0	D400 / 180 Mre
6SG7070 – 0EB60 - 0	D400 / 225 Mre
6SG7072 – 0EB60 - 0	D400 / 285 Mre
6SG7076 – 0EB60 - 0	D400 / 360 Mre
6SG7080 – 0EB60 - 0	D400 / 525 Mre
6SG7082 – 0EB60 - 0	D400 / 680 Mre
6SG7085 – 0EB60 - 0	D400 / 900 Mre
6SG7076 – 0KB60 - 0	D500 / 360 Mre



D400 / 525 Mre



D400 / 142 Mre

2.1 Converter order no. code

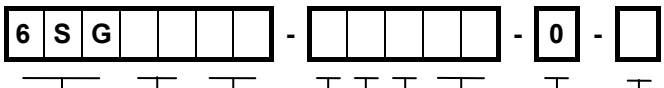

Defined according to standard general MLFB guidelines

Converter model:

70: AC and three-phase DC power controller

Rated current of:

50: 60A
52: 78A
55: 98A
60: 112A
62: 142A
65: 180A
70: 225A
72: 285A
76: 360A
80: 525A
82: 680A
85: 900A

Version:

0: Thyristor

Rated voltage of:

E: 500V
K: 690V

Current converter:

B: with current converter

Converter connection:

60: 4-quadrant converter

0

Options:

-: no options
Z: with option

2.2 Ordering information for options using codes

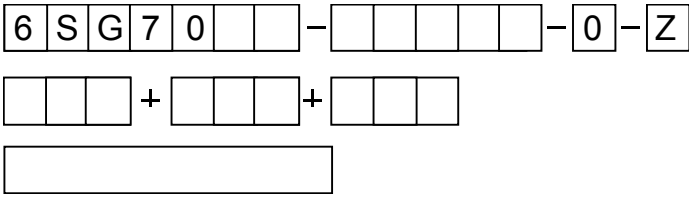

SIMOTRAS HD converter order no. with suffix Z and

codes (several codes together) and/or

plaintext (if required)

The listed optional boards have not been officially released and may only be used in consultation with the appropriate SIEMENS department.

Options	Codes	Order No.
Terminal expansion module (CUD2)		6RX1700-0AK00
Operation of SIMOTRAS HD converter at temperatures of 65°C (not available for MLFB = 6SG7076- 0KB60-0)	H78	
Special version only for MLFB 6SG7076-0EB60-0 and 6SG7076-0KB60-0, self-ventilated with rated current =130 A for exciter applications	H70	
DriveMonitor PC - PMU (RS232) connecting cable, 3m		9AK1012-1AA00
User-friendly operator control panel (OP1S)		6SE7090-0XX84-2FK0
AOP1 adapter for mounting OP1S in cubicle door, including 5m connecting cable		6SX7010-0AA00
PMU-OP1S connecting cable, 3m		6SX7010-0AB03
PMU-OP1S connecting cable, 5m		6SX7010-0AB05
LBA Local bus adapter for the electronics box LBA is always needed to install supplementary boards (see Section 5.2.2)		6SE7090-0XX84-4HA0
ADB Adapter board ADB is always needed to install CBC, CBP, EB1, EB2, SBP and SLB boards		6SE7090-0XX84-0KA0
EB1 Terminal expansion board [4] (miniature-format board; LBA + ADB required)		6SX7010-0KB00
EB2 Terminal expansion board [4] (miniature-format board; LBA + ADB required)		6SX7010-0KC00
CBP2 Communications board with interface for SINEC- L2-DP, (PROFIBUS) [1] [4] (miniature-format board; LBA + ADB required)		6SX7010-0FF05
T300 Technology board [3] can only be used in temperatures of up to 50°C (not with H78 option)		6SE7090-0XX87-4AH0
Operating Instructions for SIMOTRAS HD		
Operating instructions in German		6SG7000-0BA00
Operating instructions in English	D76	6SG7000-0BA76
Operating Instructions and DriveMonitor in all the above languages available on CD-ROM	D64	6SG7000-0CD00

Options		Codes	Order No.
SBP	Pulse encoder evaluation board 1) 2) 4) (miniature-format board; LBA + ADB required)		6SX7010-0FA00
SLB	SIMOLINK board 1) 4) (miniature-format board; LBA + ADB required)		6SX7010-0FJ00
CBC	Communications board with interface for CAN protocol 1) 4) (miniature-format board; LBA + ADB required)		6SX7010-0FG00

1) The EB1, EB2 and CBP2 boards can be ordered under two different numbers, i.e.
   - under the order number of the board without accessories (such as connectors and Short Guide) as a spare part
   - as a retrofit kit: board with connectors and Short Guide when the board is ordered as an option

Board	Order number of board (w/o accessories)	Order number of retrofit kit
EB1	6SE7090-0XX84-0KB0	6SX7010-0KB00
EB2	6SE7090-0XX84-0KC0	6SX7010-0KC00
CBP2	6SE7090-0XX84-0FF5	6SX7010-0FF05

   The retrofit kit must be ordered to install boards in the SIMOTRAS HD converter so that the correct connectors for system cabling and the Short Guide are also available.

   The LBA local bus adapter and ADB adapter board must be ordered as additional components for installing supplementary boards in the SIMOTRAS HD converter. These adapters are available under separate order numbers.

2) A pulse encoder evaluation circuit is a standard component of the basic SIMOTRAS HD converter. The SBP need therefore be ordered only in configurations requiring evaluation of a second pulse encoder.

3) An LBA local bus adapter is required to install this board in a SIMOTRAS HD converter. The adapter is available under a separate order number.

4) LBA and ADB are available under separate order numbers

3 Description

3.1 Applications

SIMOTRAS HD converters in the 6SG70 series are fully digital compact converters and have been developed for regulating three-phase lifting gear motors with slipring rotors in the output range up to 580 kW and for higher-level control of the drive.

For
- lifting gear
- slewing gear
- luffing gear
- trolley travel gear
- travel gear
- auxiliary-range gearboxes

The benefits are:
- very efficient drive unit solutions in older systems
- extremely simple retrofitting resulting in significant improvements to existing systems
- low modernization costs as existing components such as motors, resistors, cables and cabinets can continue to be used
- fast, variable and user-friendly solution with low system standstill times
- very cost-effective solution for new systems
- low requirements for contactor controls and external interlocks, as important control functions are already integrated
- little planning and configuration work required
- cost-saving due to short assembly and commissioning times thanks to connection-ready compact converter technology
- very smooth travel, which helps prevent system wear
- very high level of control quality by utilizing the particular electrical advantages of the slipring motor
- very high level of control dynamics with the use of stator phase-angle control
- all standard lifting components and interfaces can be used
- no special technologies required!

3.2 Design

Series 6SG70 SIMOTRAS HD converters are characterized by their compact, space-saving construction. Their compact design makes them particularly easy to service and maintain since individual components are readily accessible. The electronics box contains the basic electronic circuitry as well as any supplementary boards.

All SIMOTRAS HD converters are equipped with a PMU simple operator panel mounted in the converter door. The panel consists of a five-digit, seven-segment display, three LEDs as status indicators and three parameterization keys. The PMU also features connector X300 with a USS interface in accordance with the RS232 or RS485 standard. The panel provides all the facilities for making adjustments or settings and displaying measured values required to start up the converter.

The OP1S optional converter operator panel can be mounted either in the converter door or externally, e.g. in the cubicle door. For this purpose, it can be connected up by means of a 5 m long cable. Cables of up to 200 m in length can be used if a separate 5 V supply is available. The OP1S is connected to the SIMOTRAS HD via connector X300.
The OP1S can be installed as an economic alternative to control cubicle measuring instruments which display physical measured quantities.
The OP1S features an LCD with 4 x 16 characters for displaying parameter names in plaintext. German and English can be selected as the display languages.
The OP1S can store parameter sets for easy downloading to other devices.

The converter can also be parameterized on a standard PC with appropriate software connected to the serial interface on the basic unit. This PC interface is used during start-up, for maintenance during shutdown and for diagnosis in operation. Furthermore, converter software upgrades can be loaded via this interface for storage in a Flash memory.

The power section is constructed of isolated thyristor modules. The heatsink is thus electrically isolated. The housing and terminal covers on power connections provide protection against accidental contact for operators working in the vicinity. All connecting terminals are accessible from the front.

The power section cooling system is monitored by means of temperature sensors.

3.3 Mode of operation

3.3.1 Converter design

SIMOTRAS HD is a fully controllable, three-phase thyristor power controller which uses compact converter technology The converter is used to adjust and control three-phase motors with slipring rotor for lifting gear drives It is suitable for single and multi-motor drives.

Two additional thyristor modules in the shunt arm of the power section facilitate the torque switchover and thus the 4Q operation of the drive. Using the auto-reversing stage, the phase sequence on the converter output is electronically reversed. Depending on the load conditions, the converter functions in plug braking mode (braking) or it drives the machine in the other direction of rotation (driving). A driving cycle that is both highly dynamic and gentle is possible because the conventional stator contactor is no longer required.

The voltage on the motor is adjusted using the stator phase-angle control from three inverse-parallel thyristor pairs. In this process, the supply frequency of the motor is not changed; it is always identical to the relevant mains frequency.

The thyristors are controlled by the gating unit. This generates line-synchronous firing pulses. The control electronics are separated from the line potential by ignition transducers. The operating states are displayed on the unit via the 7-segment display and LEDs or via the optional OP1S operator control panel.

All converter settings (e.g. controller parameters, limit values, etc.) are saved in non-volatile memory in the converter. The adjustment is made digitally via the converter control panel or via the optional OP1S control panel.< The values can therefore be easily reproduced at any time.

SIMOTRAS HD combines two traditional procedures for adjusting the speed of asynchronous machines:

- changing the motor voltage using the stator phase-angle control
- gradient of motor characteristic curve using variable rotor resistances

This combination permits excellent control response where the advantages of both procedures are exploited and the disadvantages are largely avoided. Both procedures are described below.

3.3.2 Speed control using stator phase-angle control

The amplitude of the fundamental wave of the supply voltage is changed using the stator phase-angle control. With a constantly ascending ramp for the setpoint voltage from zero to maximum activation, the control angle and therefore the voltage time-area are continually increased. This increases the motor voltage (U_M) continually and the drive is thereby slowly accelerated. The motor torque increases proportionally to U_M^2.

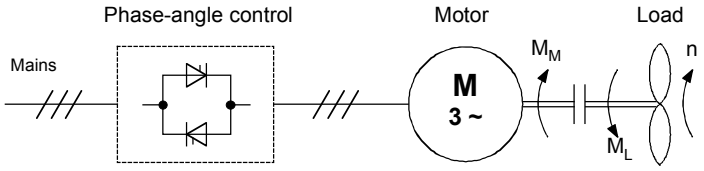

Figure 3.3.2.1 Simplified drive diagram with stator phase-angle control and asynchronous machine under load

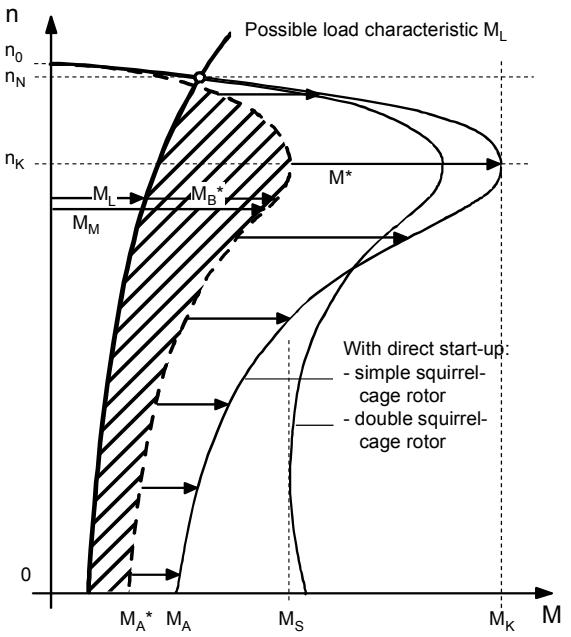

Motor characteristics

n_0 = Synchronous speed
n_N = Speed at nominal working point
n_K = Speed at pull-out torque
M_K = Pull-out torque of simple squirrel-cage rotor
M_S = Torque at dip
M_A = Start-up torque of simple squirrel-cage rotor without stator phase-angle control
M_L = Load torque
M_M = Motor torque
M_A* = Start-up torque with stator phase-angle control
M* = Temporary motor characteristic
M_B* = Acceleration torque

Figure 3.3.2.2 Simplified characteristic curve of the asynchronous machine with stator phase-angle control for a direction of rotation/torque direction

M* = temporarily effective motor characteristic (dotted line) for a single squirrel-cage motor with stator phase-angle control

M_B* = Acceleration torque of the drive provides the speed ramp-up. Derived from the present difference $M_M - M_L$. The acceleration torque M_B effective across the entire range is shown as the shaded area in the figure.

M_A* = Start-up torque of the motor set by the stator phase-angle. In order to start, M_A* must be larger than the load torque M_L.

3.3.3 Speed control by changing the rotor resistance levels

The torque can be influenced by switching on an additional ohmic resistance in the rotor circuit in the asynchronous motor. To do this, however, an asynchronous machine with a slipring rotor is required. Starting with the characteristic curve for a squirrel-cage motor, the gradients of the speed-torque curves increase as the resistance in the rotor circuit increases. The level of the pull-out torque M_K remains constant.
This means that at a specific load torque M_L, the various constant speeds n_2, n_3 or n_4 can be set. If the load changes, the speed increases as well.

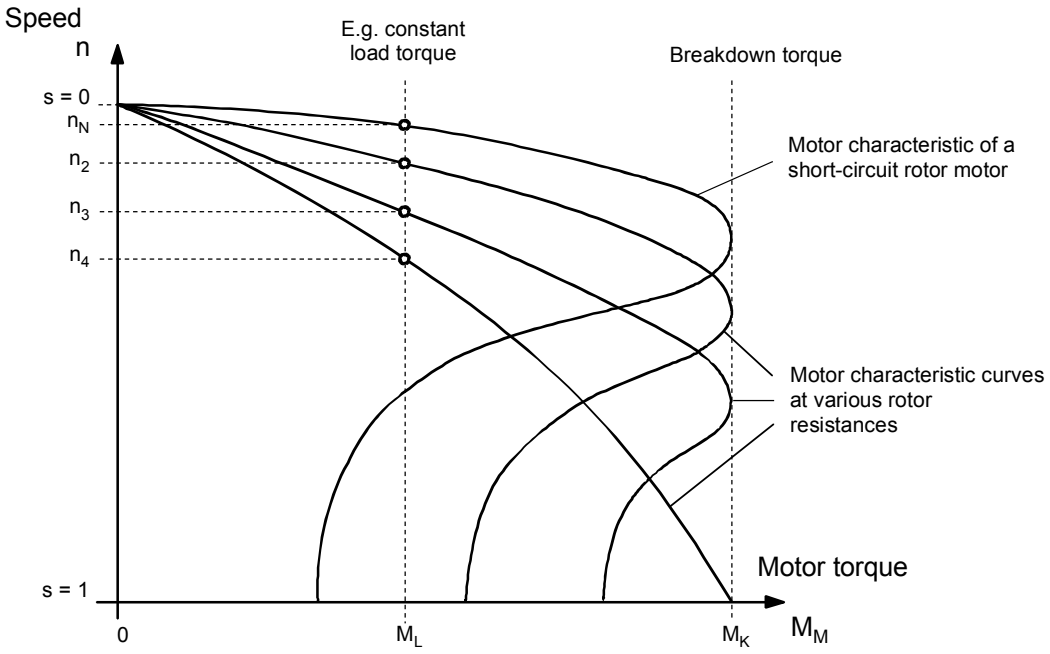

Figure 3.3.3.1 Speed-torque characteristic curves at different rotor resistances

When changing the speed using additional rotor resistances, the

Rotor output P_{2V} = rotor power input P_d * slip s

is largely converted into heat in the external resistor. This prevents excessive heating of the motor when running for extended periods at low speed.

3.3.4 Method of operation of electronic phase reversal with plug braking

The drive starts up with the positive speed and stabilizes at point a. A constant load profile is assumed during this process. If a lower setpoint or a setpoint with the opposite polarity is connected when in this state, the SIMOTRAS HD will be switched to counter-torque operation. The thyristors that are currently conducting for the clockwise rotating field are first blocked. The thyristors for the anti-clockwise rotating field are then fired. This changes the phase sequence on the output terminals to produce a new direction of rotation, point b.

The motor then starts plug braking and reduces its speed.

A slip value s = 2 exists on the machine immediately following the switchover from motor operation at point a with the speed n = n_N to braking operation at point b. With a direct switchover at full supply voltage, the motor current would now be greater than the start-up current (slip s=1, maximum current). SIMOTRAS HD therefore automatically reduces the motor voltage at this point, thereby limiting the maximum current.

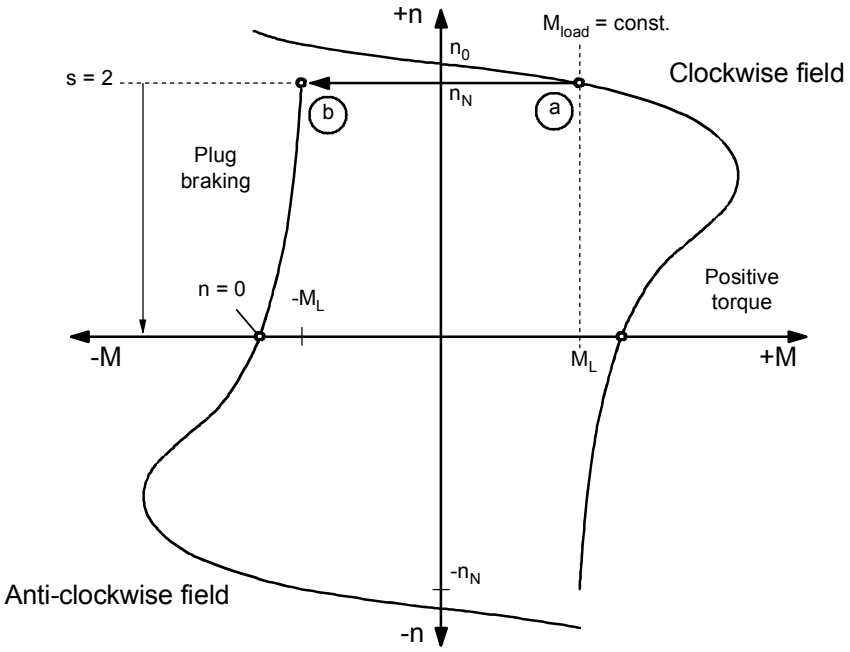

Figure 3.3.4.1 Speed-torque characteristic curves at phase reversal

3.3.5 SIMOTRAS HD – control characteristics for lifting gear

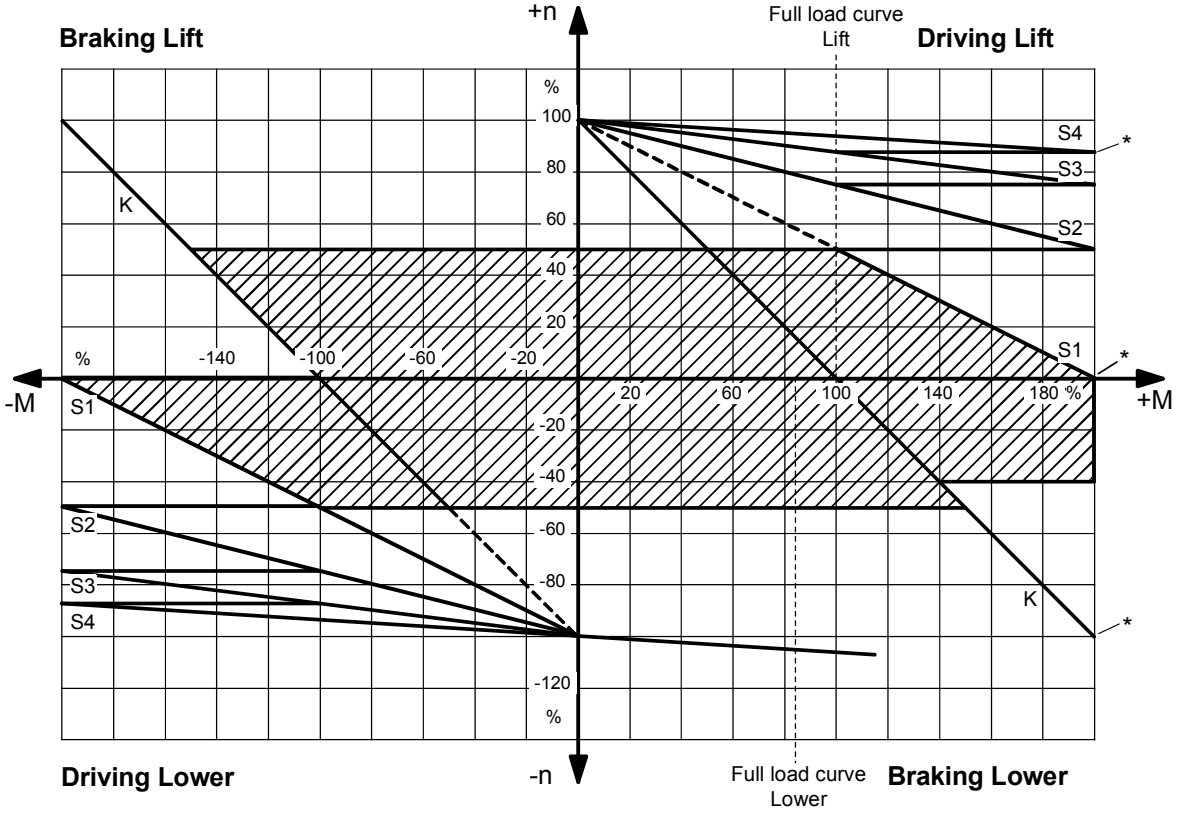

..... SIMOTRAS HD control range

K ..... Characteristic curves for counter-torque operation (plug braking), i.e. delay lowering with overhauling loads or delay lifting when active counter-torque operation requested

S2, S3, S4 .... Characteristic curves for open-loop operation

* ..... Use of current limiting (e.g. Imax = 2 * I_N)

Up to 4 rotor resistance switching stages can be provided. With less than 4 stages, the upper stages (S3 / S4) remain free.

3.3.6 SIMOTRAS HD – control characteristics for travel gear

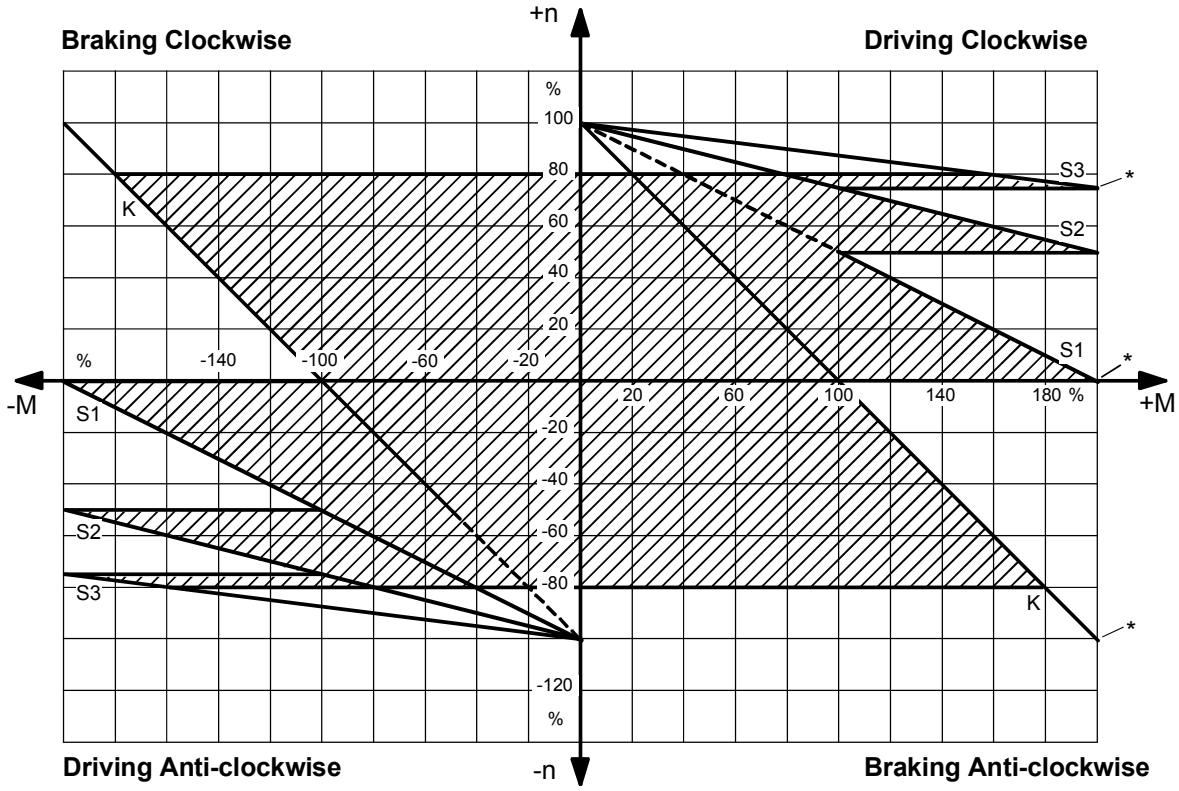

..... SIMOTRAS HD control range

K ..... Characteristic curves for counter-torque operation (plug braking)

S3 .... Characteristic curve for open-loop operation

* ..... Use of current limiting (e.g. Imax = 2 * I_N)

Up to 4 rotor resistance switching stages can be provided. With less than 4 stages, the upper stages (S3 / S4) remain free.

3.3.7 Detection of motor speed

The motor speed can be measured as an analog value by means of a tachogenerator or digitally by means of an incremental encoder.

Tachogenerator:

Connection:
See block diagram with connecting suggestion and description of terminal XT in section 6.

Parameters:
The parameters to be set are shown in function plan G113 in section 8.
The parameters are described in the parameter list in section 11.

Encoder:

Recommended type of encoder:
HOG 10 D and POG 10 D made by Baumer Hübner GmbH Berlin

Connection:
See block diagram with connecting suggestion and the description of terminal X173 in section 6.

Parameters:
The parameters to be set are shown in function plan G145 in section 8.
A description of the parameters and other notes on selection of the incremental encoder are given in the parameter list in section 11.

Actual speed:

The actually used speed is selected with parameter P083 (see function plan G151 in section 8 and parameter list in section 11).

3.4 Technical data

60A to 180A converters, 3AC 110V to 500V

Order No.		6SG70 . . - 0EB60-0					
		50	52	55	60	62	65
Rated supply voltage power section	V	3AC 110V –10% to 3AC 500V +10%					
Rated frequency	Hz	50 / 60 Hz Converters self-adapt to the frequency of the available supply voltage in the range from 45 to 65 Hz.					
Rated current of	A	60	78	98	112	142	180
Rated electronics supply voltage	V	2AC 380 (-25%) to 460 (+15%); I_n=1A or 1AC 190 (-25%) to 230 (+15%); I_n=2A (– 35% for 1min)					
Fan rated supply voltage	V	-	-	DC 24 V internal			
Overload capability		20 s duration: I = 2*I_n then 70 s duration: I = I_n then 60 s duration: I = 0 A (cycle time 150 s)					
Power loss at rated current (approx.)	W	272	306	386	439	500	630
Minimum load	A	3	6	6	6	7	7
Operational ambient temperature at rated current	°C	0 to 45 self-cooled		0 to 40 forced-cooled 1)			
Upper limit temperature with current derating	°C	55		50			
Cooling air requirement	m^3/h	-		100			
Sound pressure level	dBA	-		40			
Storage and transport temperature	°C	-25 to +70					
Installation altitude above sea level		≤ 1000 m at rated current max. 3500m with voltage and current reduction 2)					
Environmental class DIN IEC 60721-3-3		3K3					
Degree of protection DIN EN 60529		IP00					
Dimensions		See dimension drawings					
Weight (approx.)	kg	16	16	16	16	17	17

Explanation at end of list of tables

225A to 900A converters, 3AC 110V to 500V

Order No.		6SG70 . . - 0EB60-0					
		70	72	76	80	82	85
Rated supply voltage power section Rated frequency	V Hz	3AC 110V –10% to 3AC 500V +10% 50 / 60 Hz Converters self-adapt to the frequency of the available supply voltage in the range from 45 to 65 Hz.					
Rated current of	A	225	285	360	525	680	900
Rated electronics supply voltage	V	2AC 380 (-25%) to 460 (+15%) I_n=1A or 1AC 190 (-25%) to 230 (+15%) I_n=2A (– 35% for 1min)					
Fan rated supply voltage	V	3 AC 400 ±15% 50Hz 3 AC 460 ±10% 60Hz				3 AC 400 ±10% 50Hz 3 AC 460 ±10% 60Hz	
Fan rated current	A	0.24				1.1	
Overload capability		20 s duration: $I = 2*I_n$ then 70 s duration: $I = I_n$ then 60 s duration: I = 0 A (cycle time 150 s)					
Power loss at rated current (approx.)	W	839	1020	1300	1827	2890	3550
Minimum load	A	10	10	10	15	15	15
Operational ambient temperature at rated current	°C	0 to 40 forced-cooled [1]					
Upper limit temperature with current derating	°C	50					
Cooling air requirement	m^3/h	570				1400	2400
Sound pressure level	dBA	73				88	
Storage and transport temperature	°C	-25 to +70					
Installation altitude above sea level		≤ 1000 m at rated current max. 3500m with voltage and current reduction [2]					
Environmental class DIN IEC 60721-3-3		3K3					
Degree of protection DIN EN 60529		IP00					
Dimensions		See dimension drawings					
Weight (approx.)	kg	30	30	30	45	85	137

Explanation at end of list of tables

360A converters, 3AC 200V to 690V

Order No.		6SG7076-0KB60-0	6SG7076-0KB60-0-Z Z=H70
Rated supply voltage power section	V	3AC 200 V –10% to 3AC 690 V +10%	
Rated frequency	Hz	50 / 60 Hz Converters self-adapt to the frequency of the available supply voltage in the range from 45 to 65 Hz.	
Rated current of	A	360	130
Rated electronics supply voltage	V	2AC 380 (-25 %) to 460 (+15 %) I_n=1 A or 1AC 190 (-25 %) to 230 (+15 %) I_n=2 A (– 35 % for 1 min)	
Fan rated supply voltage	V	3 AC 400 ±15 % 50 Hz 3 AC 460 ±10 % 60 Hz	-
Fan rated current	A	0.24	-
Overload capability		20 s duration: I = 2*I_n then 70 s duration: I = I_n then 60 s duration: I = 0 A (cycle time 150 s)	
Power loss at rated current (approx.)	W	1400	500
Minimum load	A	10	10
Operational ambient temperature at rated current	°C	0 to 40 forced-cooled 1)	0 to 45 self-cooled
Upper limit temperature with current derating	°C	50	
Cooling air requirement	m^3/h	570	-
Sound pressure level	dBA	73	-
Storage and transport temperature	°C	– 25 to +70	
Installation altitude above sea level		≤ 1000 m at rated current max. 3500m with voltage and current reduction 2)	
Environmental class DIN IEC 60721-3-3		3K3	
Degree of protection DIN EN 60529		IP00	
Dimensions		See dimension drawings	
Weight (approx.)	kg	45	44

Fußnotenerklärung nach den Tabellen

42A to 125A controllers, 3AC 110V to 500V (H78)

Order No.		6SG70 . . - 0EB60 - 0-Z ...Z=H78					
		50	52	55	60	62	65
Rated supply voltage power section Rated frequency	V Hz	3AC 110V –10% to 3AC 500V +10% 50 / 60 Hz Converters self-adapt to the frequency of the available supply voltage in the range from 45 to 65 Hz.					
Rated current of	A	42	55	70	80	100	125
Rated electronics supply voltage	V	2AC 380 (-25%) to 460 (+15%) I_n=1A or 1AC 190 (-25%) to 230 (+15%) I_n=2A (– 35% for 1min)					
Rated supply voltage for fans	V	-	-	DC 24 V internal			
Overload capability		20 s duration: I = 2*I_n then 70 s duration: I = I_n then 60 s duration: I = 0 A (cycle time 150 s)					
Power loss at rated current (approx.)	W	205	230	288	322	365	445
Minimum load	A	3	6	6	6	7	7
Operational ambient temperature at rated current	°C	+65					
Cooling air requirement	m^3/h	-		100			
Sound pressure level	dBA	-		40			
Storage and transport temperature	°C	-25 to +70					
Installation altitude above sea level		≤ 1000 m at rated current max. 5000m with voltage and current reduction 2)					
Environmental class DIN IEC 60721-3-3		3K3					
Degree of protection DIN EN 60529		IP00					
Dimensions		See dimension drawings					
Weight (approx.)	kg	16	16	16	16	17	17

Explanation at end of list of tables

150A to 700A converters, 3AC 110V to 500V (H78)

Order No.		6SG70 . . - 0EB60 - 0-Z ...Z=H78					
		70	72	76	80	82	85
Rated supply voltage power section Rated frequency	V Hz	3AC 110V –10% to 3AC 500V +10% 50 / 60 Hz Converters self-adapt to the frequency of the available supply voltage in the range from 45 to 65 Hz.					
Rated current of	A	150	200	250	365	475	700
Rated electronics supply voltage	V	2AC 380 (-25%) to 460 (+15%) I_n=1A or 1AC 190 (-25%) to 230 (+15%) I_n=2A (– 35% for 1min)					
Rated supply voltage for fans	V	3 AC 400 ±15% 50Hz 3 AC 460 ±10% 60Hz				3 AC 400 ±10% 50Hz 3 AC 460 ±10% 60Hz	
Fan rated current	A	0,24				1,1	
Overload capability		20 s duration: I = 2*I_n then 70 s duration: I = I_n then 60 s duration: I = 0 A (cycle time 150 s)					
Power loss at rated current (approx.)	W	595	731	895	1280	2146	2865
Minimum load	A	10	10	10	15	15	15
Operational ambient temperature at rated current	°C	+65					
Cooling air requirement	m^3/h	570				1400	2400
Sound pressure level	dBA	73				88	
Storage and transport temperature	°C	-25 to +70					
Installation altitude above sea level		≤ 1000 m at rated current max. 3500m with voltage and current reduction [2)]					
Environmental class DIN IEC 60721-3-3		3K3					
Degree of protection DIN EN 60529		IP00					
Dimensions		See dimension drawings					
Weight (approx.)	kg	30	30	30	45	85	137

Explanation at end of list of tables

1) Load values as a function of coolant temperature (refer to P077 in Section 11)

Ambient temperature or coolant temperature	Change in load values (percentage reduction "a")	
	in devices with self-cooling	in devices with enhanced air cooling
+40°°C		– 0 %
+45°°C	0 %	– 5 %
+50°°C	– 6 %	– 10 %

2) Load values as a function of installation altitude (refer to P077 in Section 11)

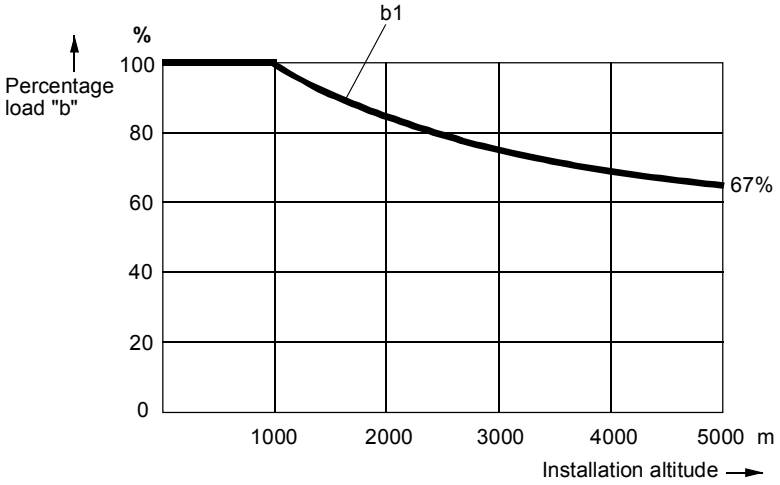

Curve b1: Reduction factor of load values at installation altitudes above 1000 m

Permitted continuous current

Operating the converter continuously at the rated supply current I_n is permitted. The limit temperature of the thyristors will be reached.

It is not possible to accelerate out of this operating state, i.e. to increase the current!

The current should therefore be reduced before accelerating so the converter can cool down.

3.5 Applicable standards

VDE 0106 Part 100
Arrangement of operator control elements in the vicinity of components/parts at hazardous voltage levels.

EN 50178
Electronic equipment for use in power installations
Degree of pollution 2:
Under normal conditions, only non-conductive pollution occurs. Occasionally, pollution may become conductive for a short period of time when the electronic equipment is not in operation.

VDE 0113 T1
Electrical equipment on industrial machines (where applicable).

VDE 0160 Section 5.3.1.1.2 and 5.3.1.1.3, EN 50178
Regulations for equipping electrical power systems with electronic equipment.

Use of cables and insulated wiring in electrical power systems.

EN61000-4-2 and EN61000-4-4
Noise immunity

DIN IEC 60068-2-6 acc. to severity grade 12 (SN29010 Part1)
Mechanical stressing

3.6 Certification

ISO 9001:

The products referred to in this document are manufactured and operated in accordance with DIN ISO 9001 (Certificate Register No.: 257-0).

Ship-building:

	Certificate No.
Germanischer Lloyd	26 072 - 05 HH
Lloyd's Register	06 / 20053
American Bureau of Shipping	06-HG195136-PDA
Det Norske Veritas	E-7924

Information on the necessary measures can be found in the CD-ROM "SIMOTRAS HD 6SG70 documentation" – order number 6SG7000-0CD00 (from issue 04 onwards) or in the Internet at http://support.automation.siemens.com/WW/view/en/24063215

3.7 Abbreviations

CB	Communications board
PKW	Parameter ID value
PZD	Process data
TB	Technology board
ZSW	Status word
NC	not connected

4 Shipment, unpacking

SIMOTRAS HD converters are packed in the production works according to the relevant ordering data. A product packing label is attached to the box.

Protect the package against severe jolts and shocks during shipment, e.g. when setting it down.

Carefully observe the information on the packaging relating to transportation, storage and proper handling.

The SIMOTRAS HD device can be installed after it has been unpacked and the shipment checked for completeness and/or damage.

The packaging materials consist of cardboard and corrugated paper and can be disposed of according to locally applicable waste disposal regulations.

If you discover that the converter has been damaged during shipment, please inform your shipping agent immediately.

5 Installation

CAUTION

Failure to lift the converter in the correct manner can result in bodily injury and/or property damage.

The converter must be lifted using suitable equipment and under the instruction of appropriately qualified personnel.

To preclude the risk of deformation damage to the housings of D400 / 680 – 900 Mre converters, the lifting lugs used to raise them must not be subjected to any horizontal forces.

The user is responsible for installing the converter, motor, transformer as well as other equipment according to safety regulations (e.g. DIN, VDE), as well as all other relevant national or local regulations regarding cable dimensioning and protection, grounding, isolating switch, overcurrent protection, etc.

The converter must be installed in accordance with the relevant safety regulations (e.g. DIN, VDE), as well as all other relevant national and local regulations. It must be ensured that the grounding, cable dimensioning and appropriate short-circuit protection have been implemented to guarantee operational safety and reliability.

Possible lifting method for D400 / 900 Mre converters

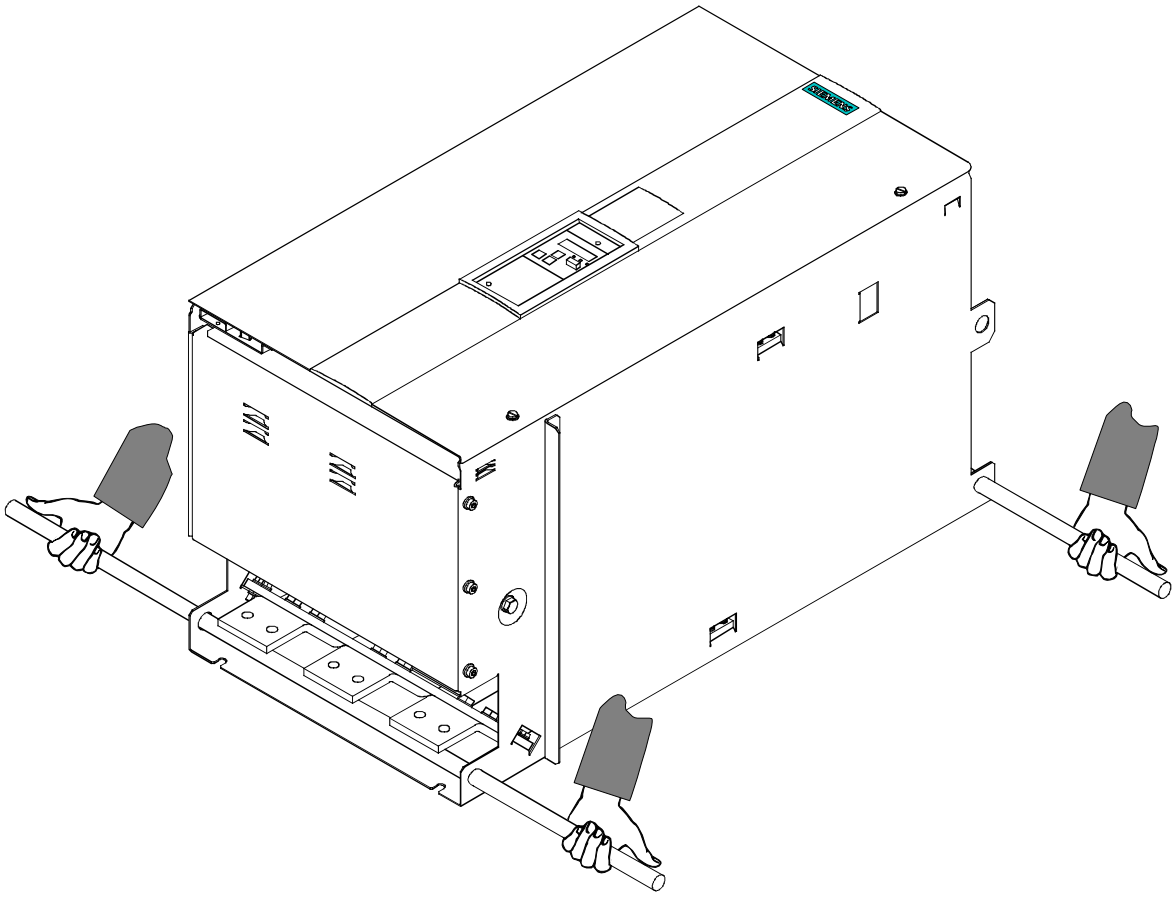

Cubicle mounting of D400 / 900 Mre converters

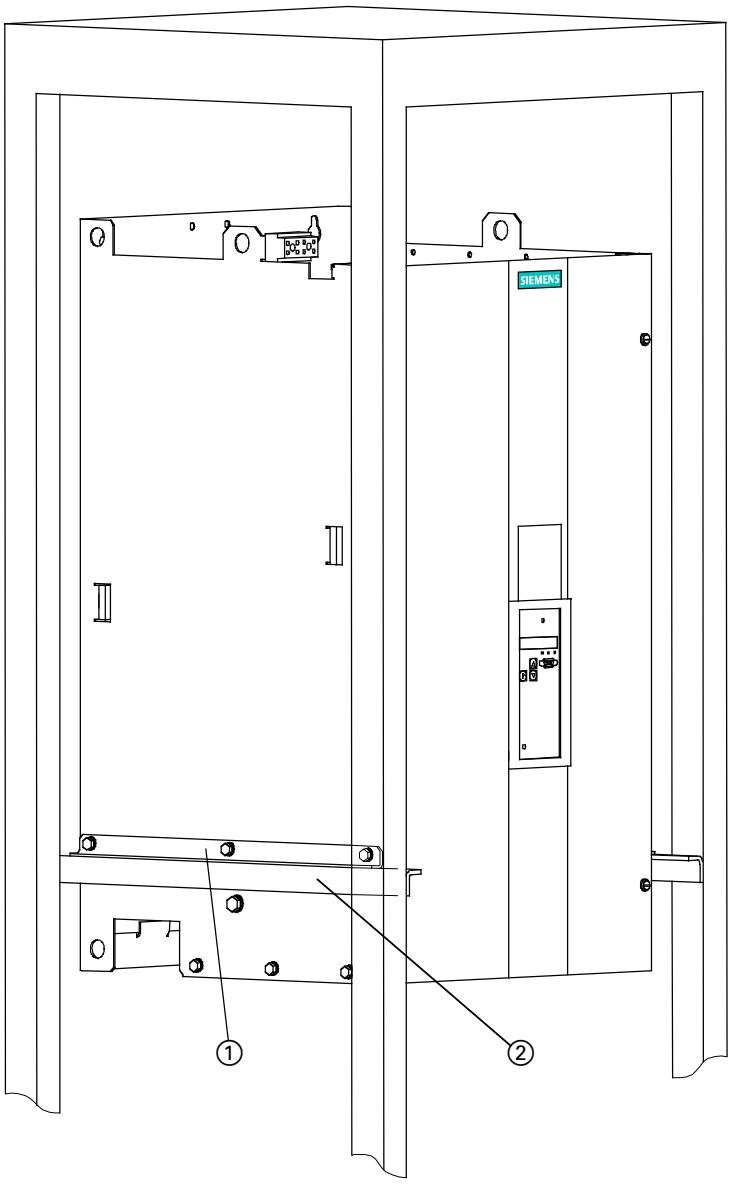

- These converters are supplied with 2 fixing angles ①. These can be bolted to the SIMOTRAS HD unit by means of the supplied M6 hexagon-head screws (3 per angle) to assist cubicle mounting.
- The unit can then be supported by 2 further angles ② (not included in scope of supply) in the control cubicle.
- The converters must be bolted to the cubicle rear panel in 4 places.

5.1 Dimension drawings

WARNING

A clearance of at least 100 mm must be left above and below the converter in order to ensure an unrestricted cooling air intake and outlet.

The converter may overheat if this clearance is not provided!

D400 / 60 - 180 Mre converters

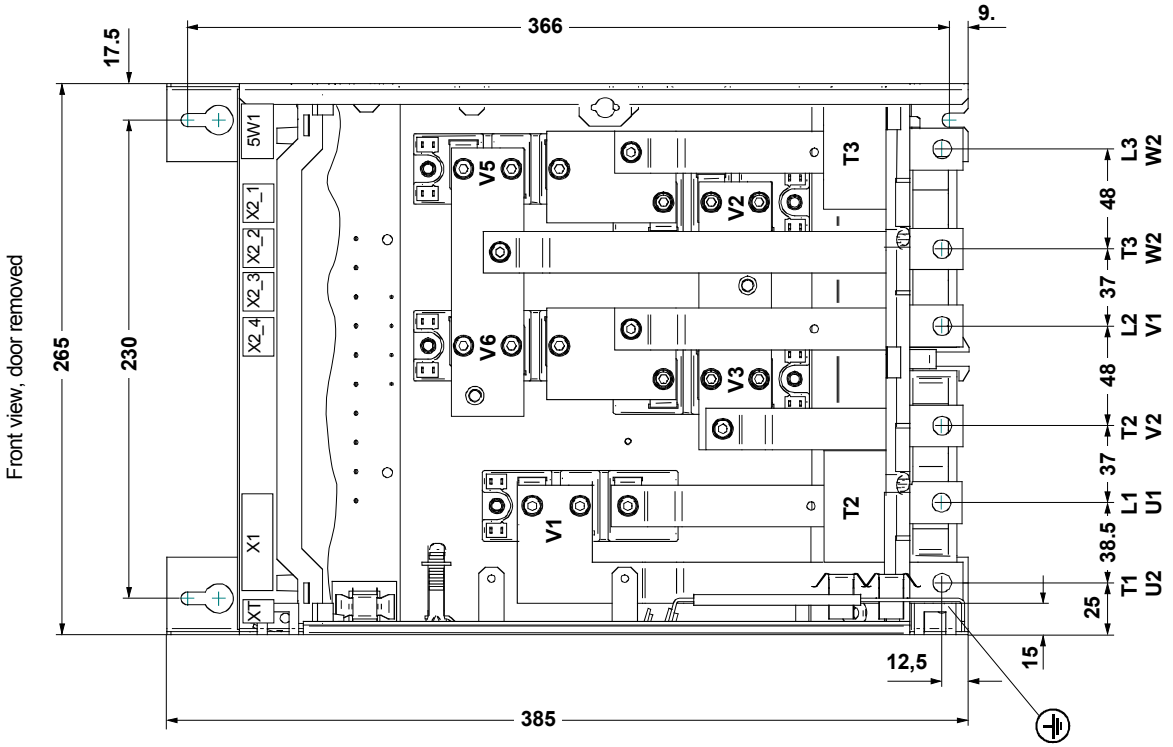

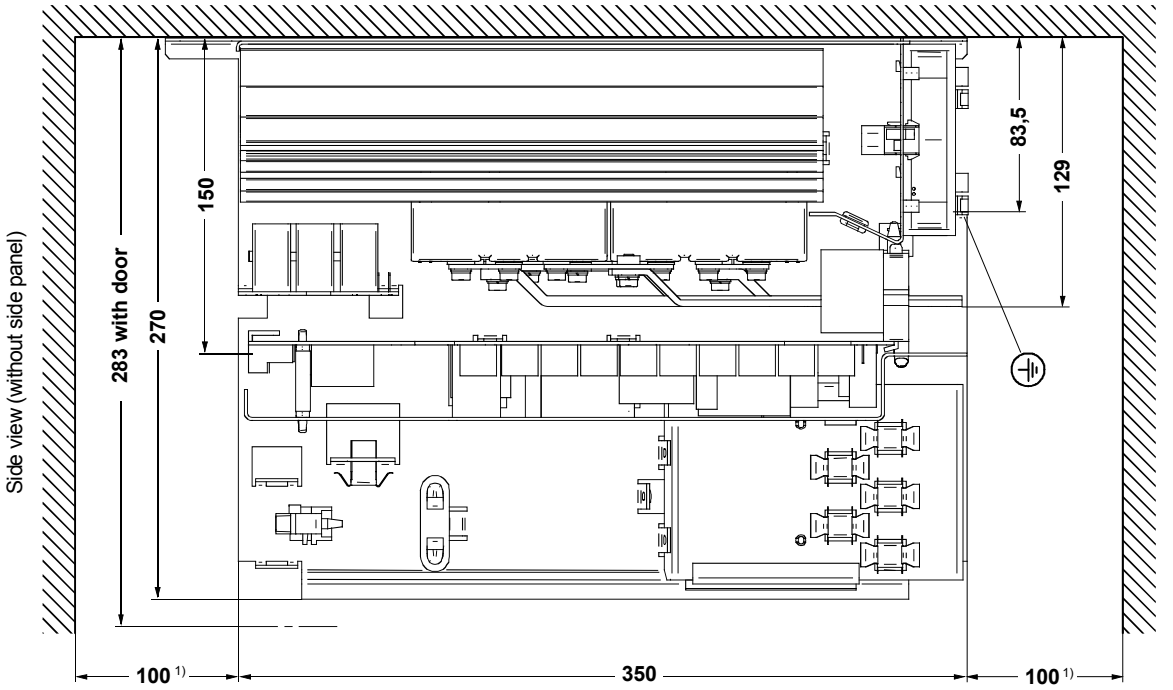

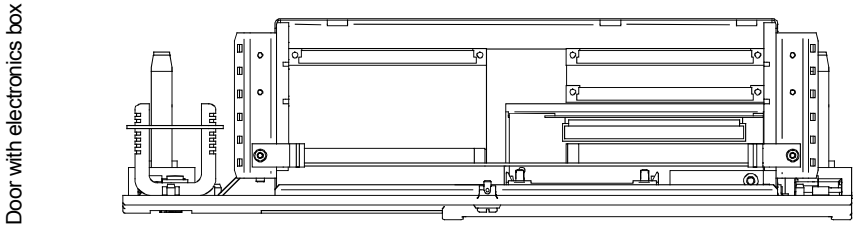

1) Minimum space required for air circulation, ensure there is an adequate supply of cooling air

D400 / 225 - 360 Mre converters

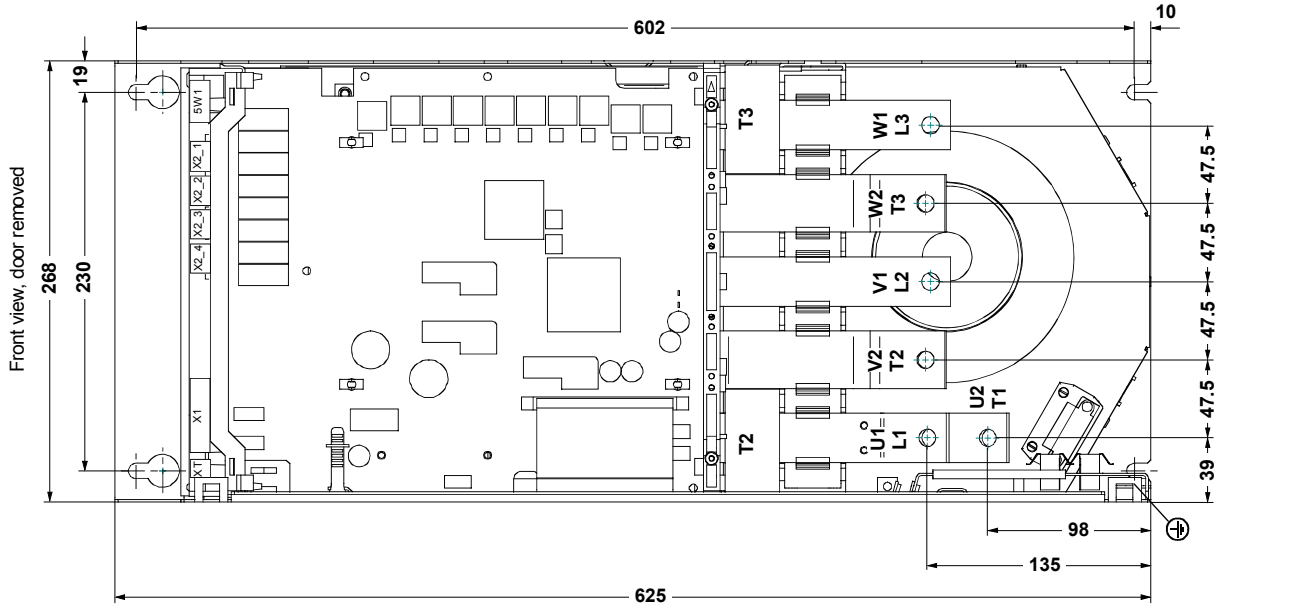

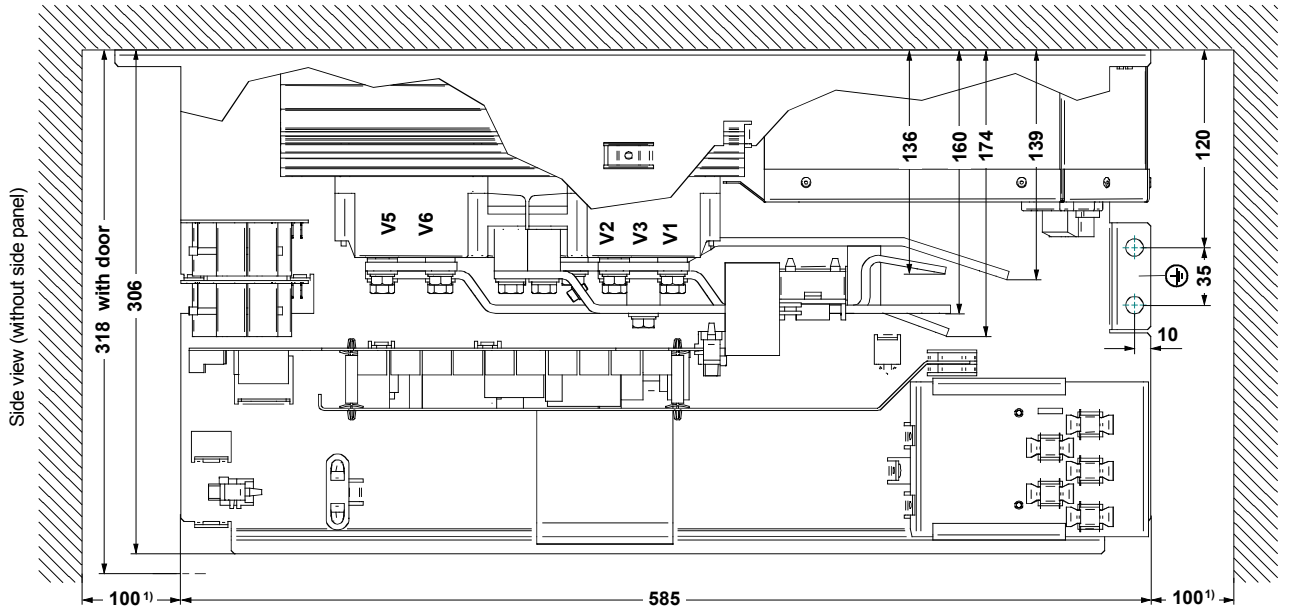

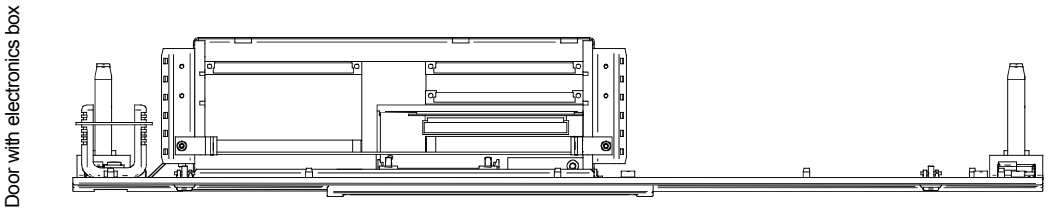

1) Minimum space required for air circulation, ensure there is an adequate supply of cooling air

D400 / 525 Mre and D500 / 360 Mre converters

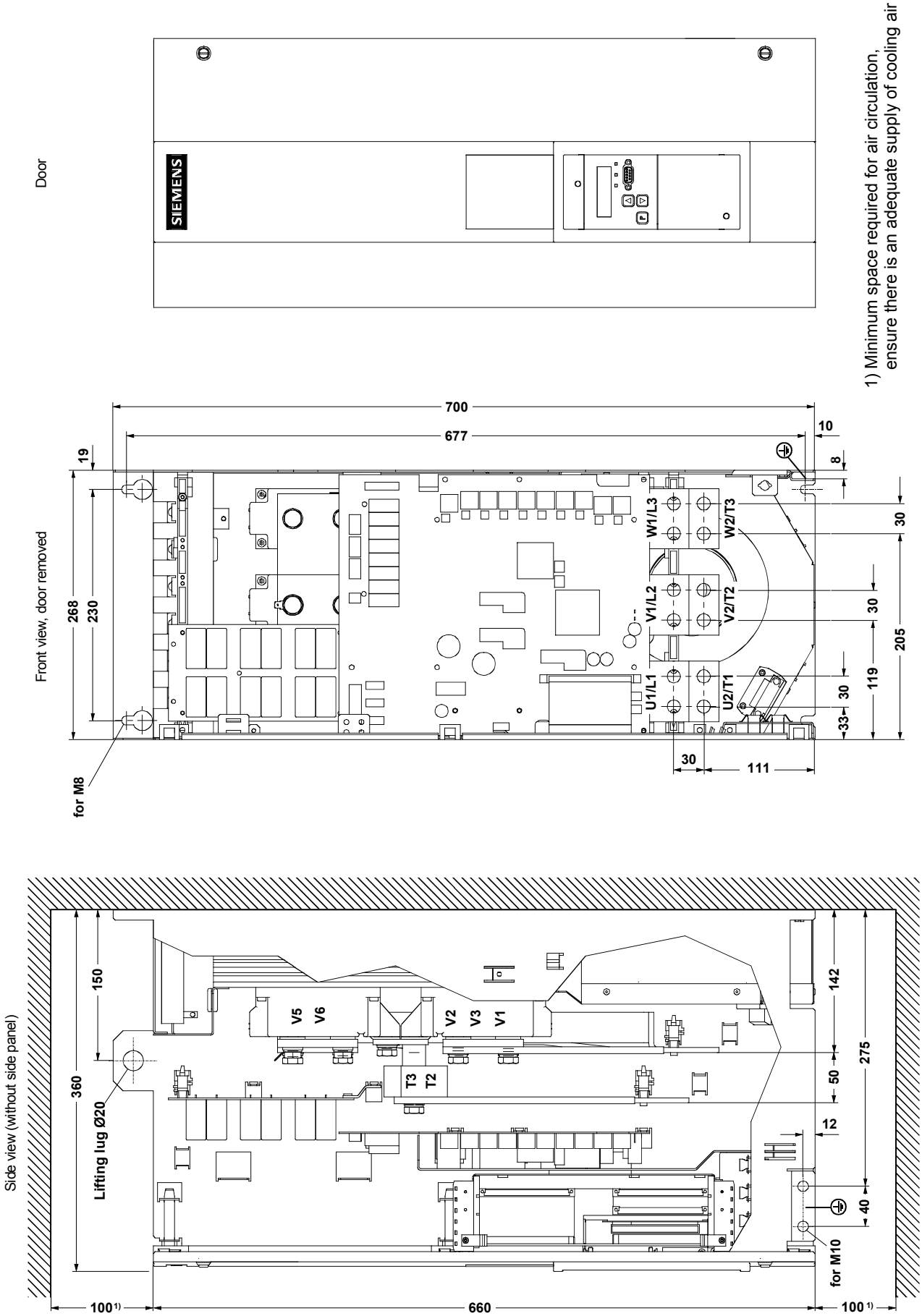

D400 / 680 Mre converters

Front view with door

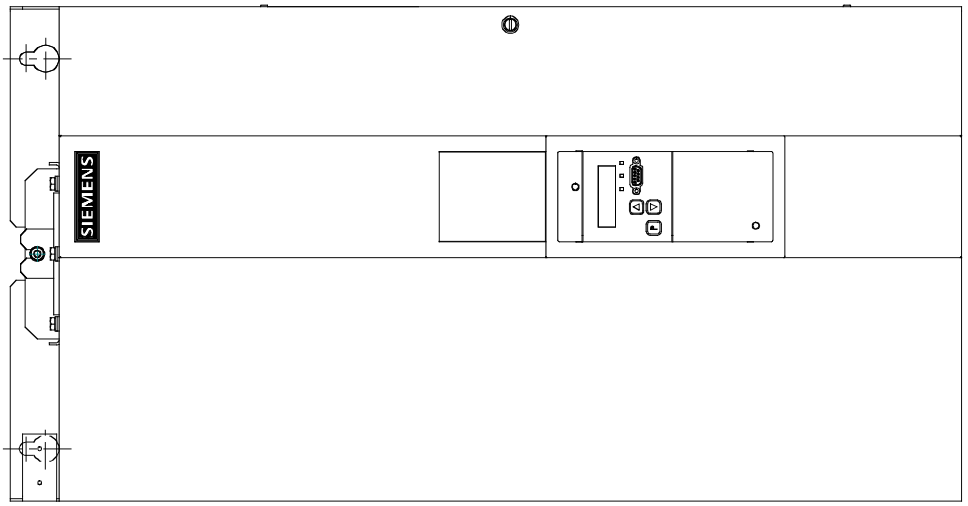

1) Minimum space required for air circulation, ensure there is an adequate supply of cooling air

Front view, door removed

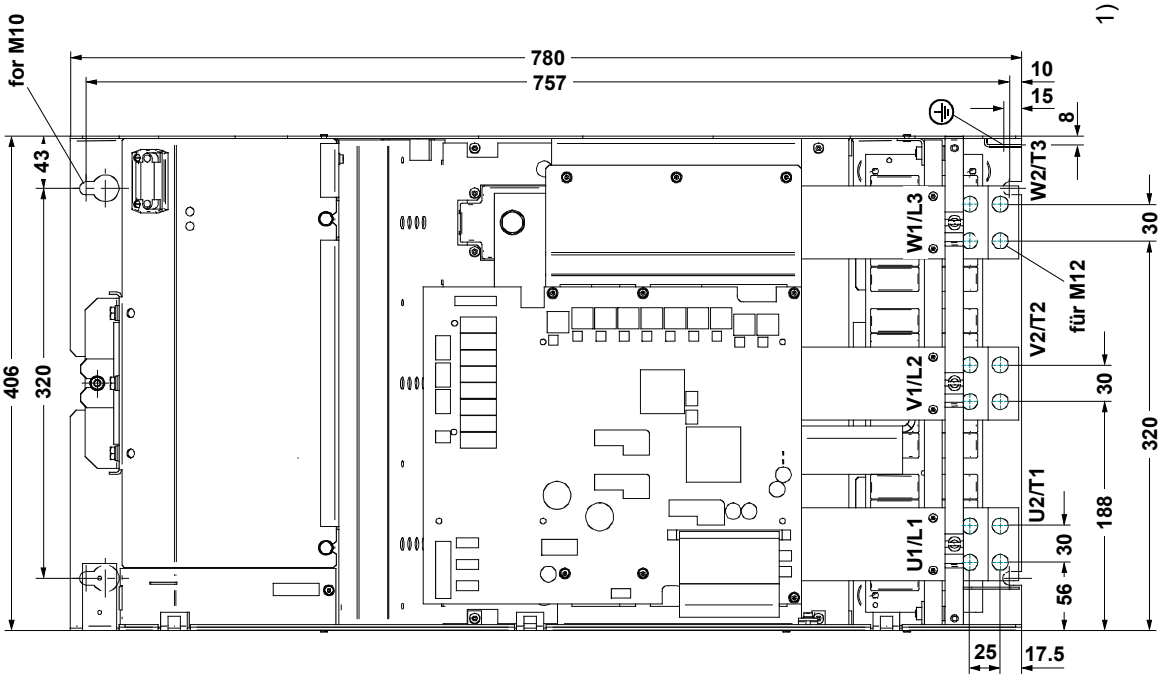

Side view (without side panel)

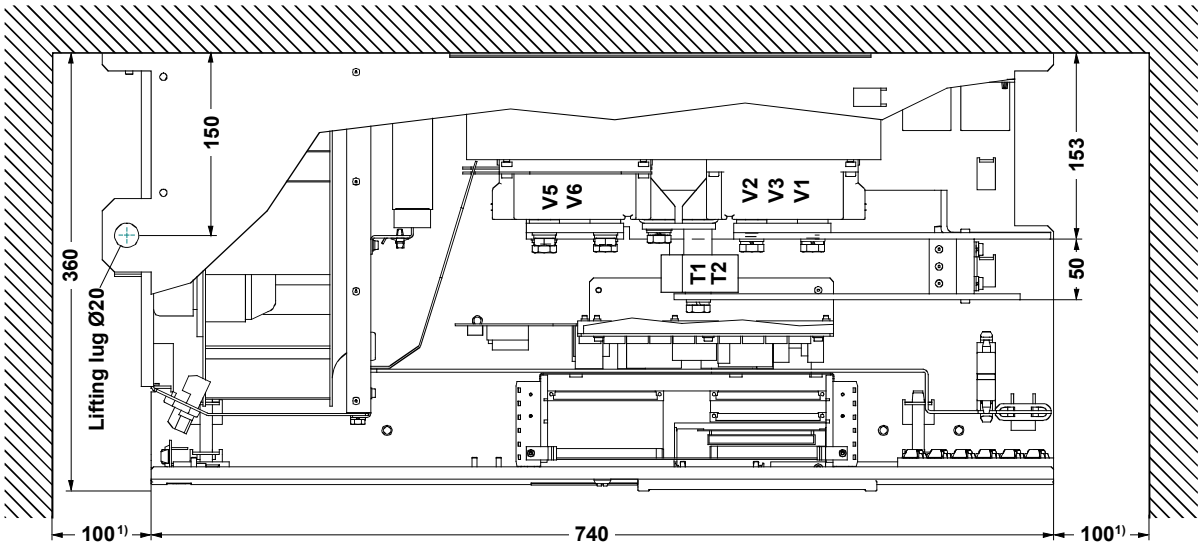

D400 / 900 Mre converters

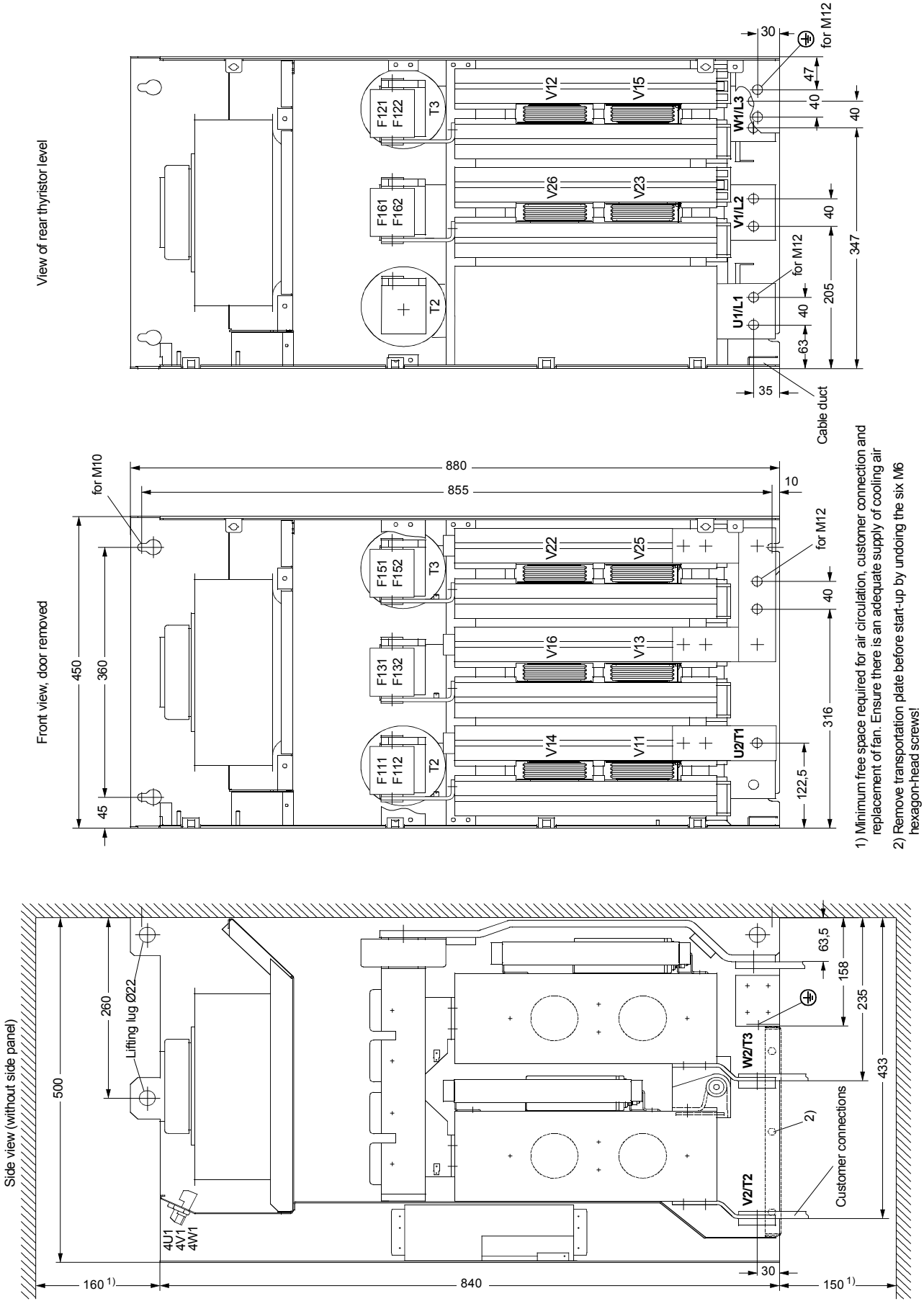

5.2 Mounting options

5.2.1 Terminal expansion board CUD2

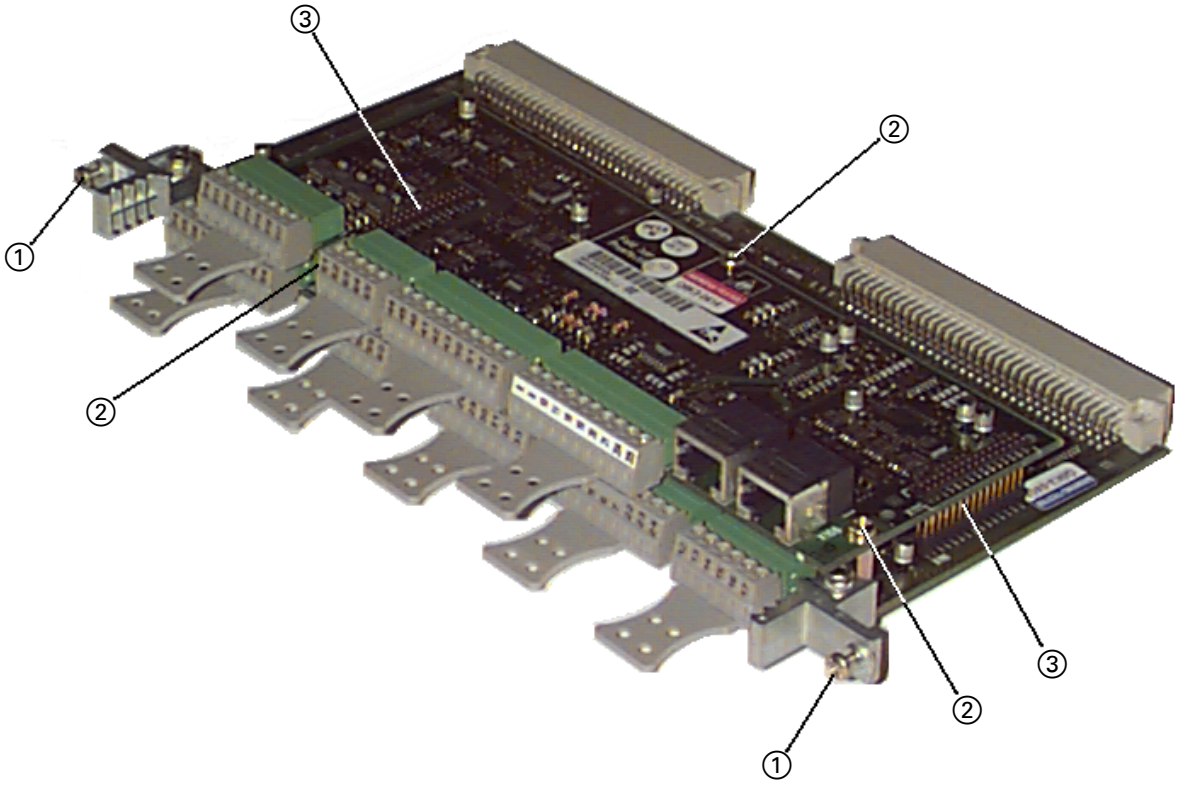

- Remove electronics board CUD1 from the electronics box by undoing the two fixing screws ①.
- Attach the 3 supplied hexagon-head studs at position ② on the CUD1 electronics board.
- Position board CUD2 in such a way that the two plug connectors ③ are properly contacted. The two plug connectors must be positioned such that the short pin ends are inserted in the socket connectors of the CUD1 and the long pin ends in the socket connectors of the CUD2.
- Secure board CUD2 in position using the supplied screws and retaining elements ②.
- Insert electronics board CUD1 into electronics box and tighten up the two fixing screws ① again as instructed.

5.2.2 Optional supplementary boards

WARNING

Safe operation is dependent upon proper installation and start-up by qualified personnel under observance of all warnings contained in these operating instructions.

PCBs may be replaced only by properly qualified personnel.

PCBs must not be removed or inserted when the power supply is connected.

Non-observance of the safety instructions can result in death, severe personal injury or substantial property damage.

CAUTION

PCBs contains electrostatically sensitive devices. Before touching a PCB, the person carrying out the work must himself be electrostatically discharged. The simplest way of doing this is to touch an electrically conductive earthed object, e.g. socket outlet earth contact.

5.2.2.1 Local bus adapter (LBA) for mounting optional supplementary boards

Optional supplementary boards can be installed only in conjunction with the LBA option. If an LBA is not already fitted in the SIMOTRAS HD converter, one must be installed in the electronics box to accommodate the optional board.

How to install an LBA local bus adapter in the electronics box:

- Undo the two fixing screws on the CUD1 board and pull board out by special handles.
- Push LBA bus extension into electronics box (see picture on right for position) until it engages.
- Insert CUD1 board in left-hand board location again and tighten fixing screws in handles.

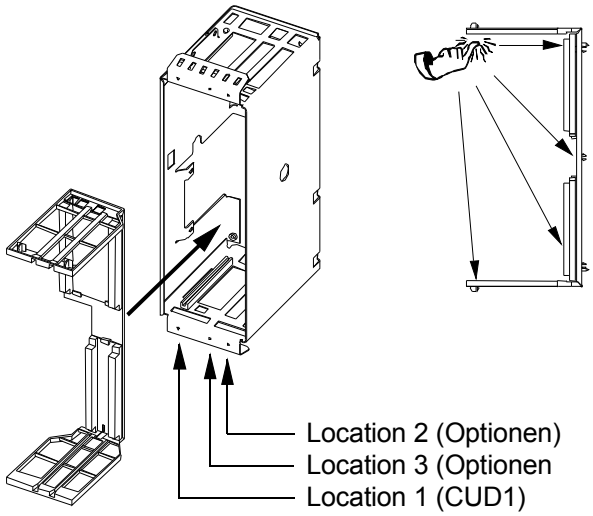

5.2.2.2 Mounting of optional supplementary boards

Supplementary boards are inserted in the slots of the electronics box. Option **LBA** (local bus adapter) is required to fit supplementary boards. The designations of the board locations or slots are shown in the adjacent diagram.

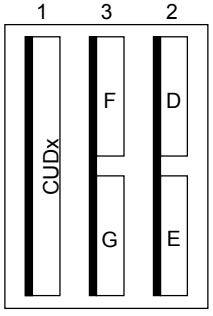

Arrangement of board locations 1 to 3 and slots D to G in electronics box

Supplementary boards may be inserted in any slot subject to the following restrictions:

NOTICE

- Slot 3 must not be used until slot 2 is already occupied.
- A technology board must always be installed in board location 2 of the electronics box.
- If a technology board is used in conjunction with **one** communication board, then the communication board must be fitted in slot G (miniature-format boards, for example CBP2 and CBC) or slot 3 (large-format board SCB1).
- It is not possible to operate boards EB1, EB2, SLB and SBP in conjunction with a technology board.
- The data of large-format boards are always output under slot E or slot G, i.e. the software version of a technology board, for example, is displayed in r060.003.
- In addition to the LBA, miniature-format boards (for example CBP2 and CBC) also require an **ADB** (adapter board, support board). Due to their very compact physical dimensions, these boards must be inserted in an ADB before they can be installed in the electronics box.
- A total of two supplementary boards of the same type can be used (e.g. 2 EB1s), but only 1 SBP and 1 SLB may be installed.

For information about starting up supplementary boards, please refer to Section 7.10 "Starting up optional supplementary boards".

6 Connections

WARNING

The converters are operated at high voltages.

Disconnect the power supply before making any connections!

Only qualified personnel who are thoroughly familiar with all safety notices contained in the operating instructions as well as erection, installation, operating and maintenance instructions should be allowed to work on these devices.

Non-observance of the safety instructions can result in death, severe personal injury or substantial property damage.

The converter might sustain serious or irreparable damage if connected incorrectly.

Voltage may be present at the power and control terminals even when the motor is stopped.

The snubber capacitors continue to carry hazardous voltage for up to 2 minutes after isolation from the supply. For this reason, the converter must not be opened for at least two minutes after switch-off.

When working on the open converter, remember that live parts are exposed. The unit must always be operated with the standard front covers in place.

The user is responsible for ensuring that the motor, SIMOTRAS converter and other devices are installed and connected up in accordance with the approved codes of practice of the country concerned and any other regional or local codes that may apply. Special attention must be paid to proper conductor sizing, fusing, grounding, isolation and disconnection measures and to overcurrent protection.

These converters contain hazardous rotating machinery (fans) and control rotating mechanical components (drives). Death, serious bodily injury or substantial property damage may occur if the instructions in the relevant operating manuals are not observed.

The successful and safe operation of this equipment is dependent on careful transportation, proper storage and installation as well as correct operation and maintenance.

6.1 Block diagram with suggested connection

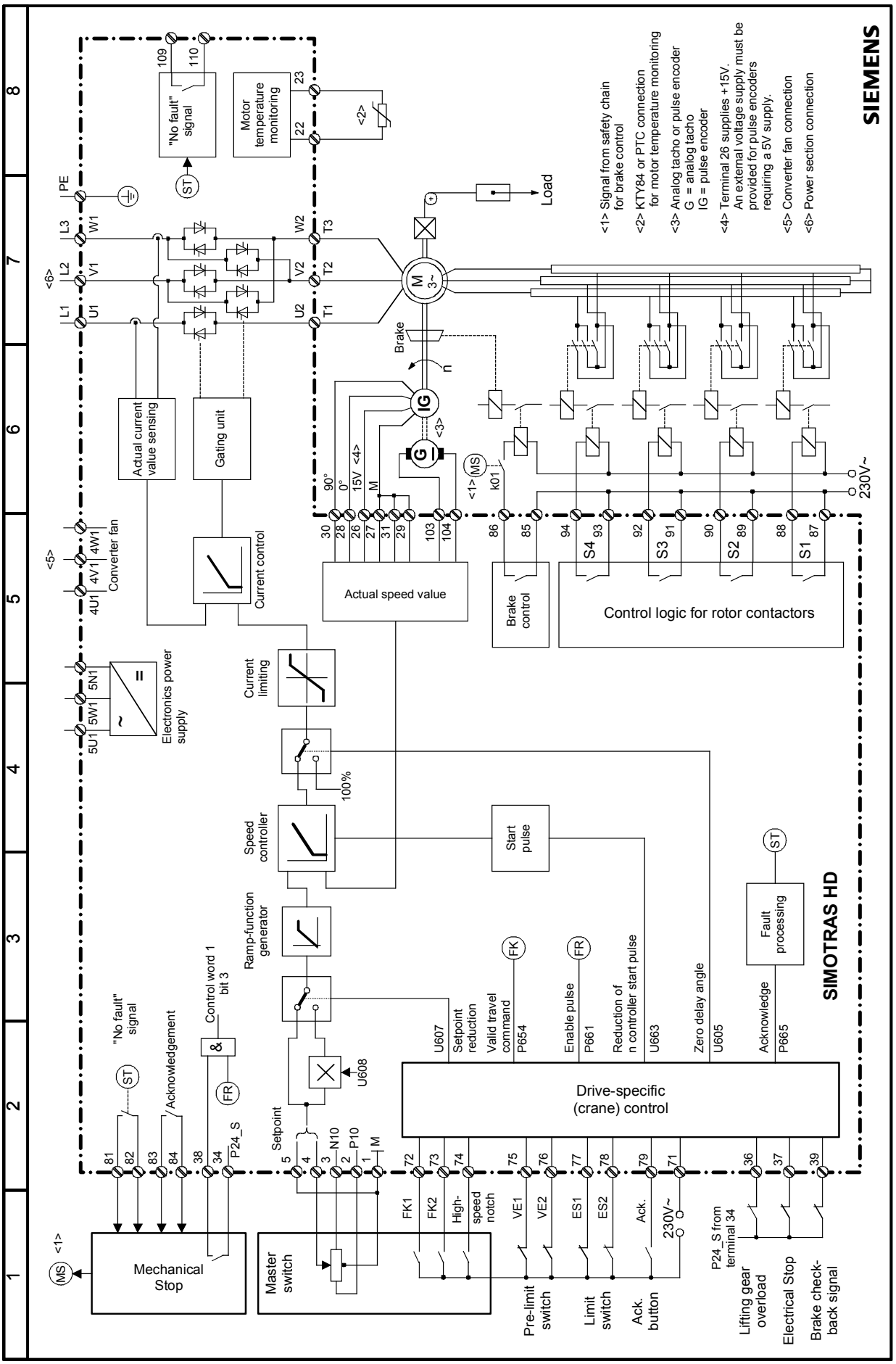

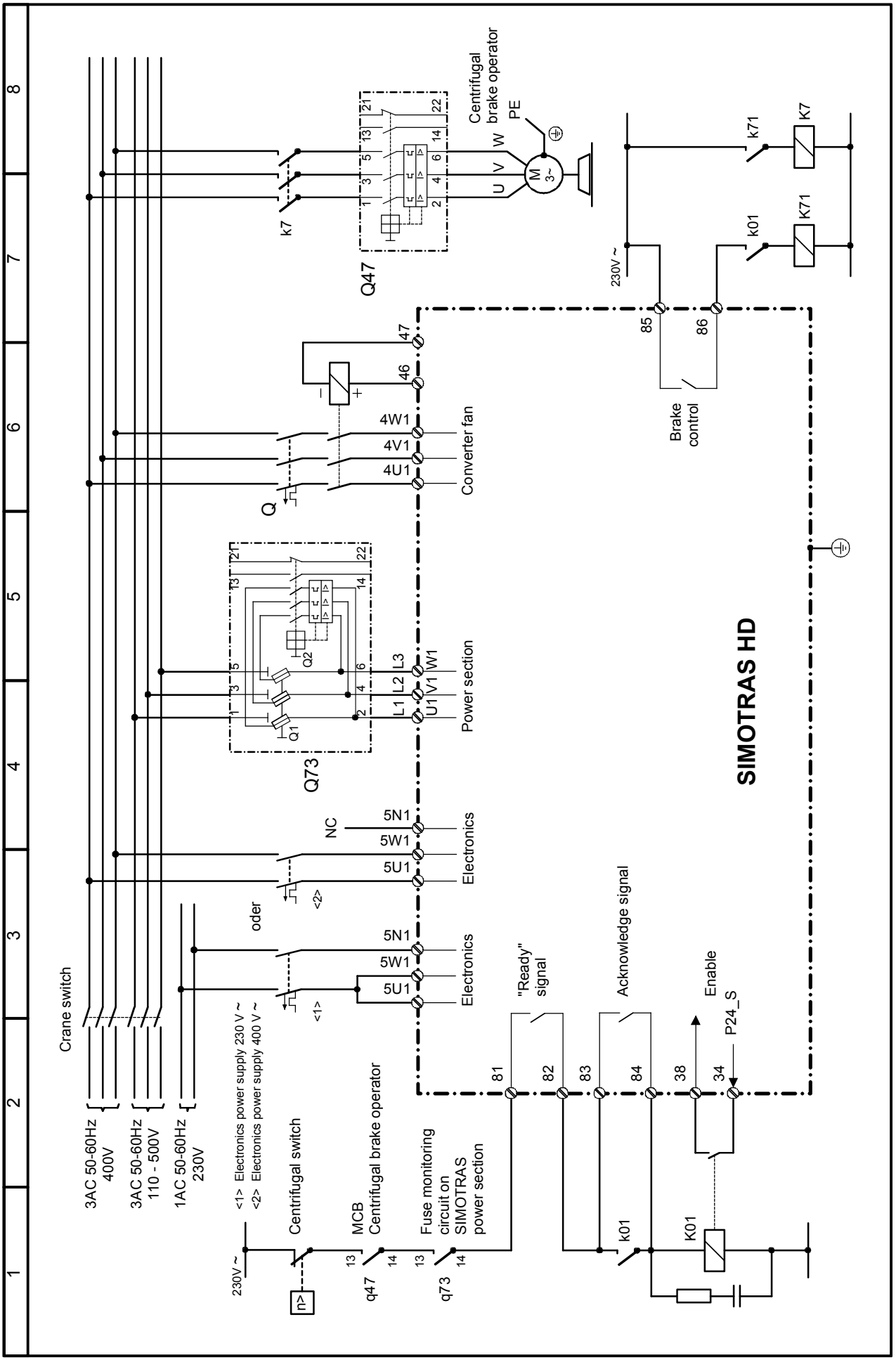
SIMOTRAS HD
Crane switch
3AC 50-60Hz 400V
3AC 50-60Hz 110 - 500V
1AC 50-60Hz 230V
<1> Electronics power supply 230 V ~
<2> Electronics power supply 400 V ~
Centrifugal switch
MCB Centrifugal brake operator
Fuse monitoring circuit on SIMOTRAS power section
Q47
Q73
Q
Q1
Q2
k7
K7
k71
K71
k01
K01
q47
q73
n>
Centrifugal brake operator
PE
U
V
W
M 3~
230V ~
Brake control
Converter fan
4W1
4V1
4U1
Power section
L1
L2
L3
U1
V1
W1
Electronics
NC
5N1
5W1
5U1
oder
<1>
<2>
"Ready" signal
Acknowledge signal
Enable
P24_S
81
82
83
84
85
86
38
34
13
14
47
46

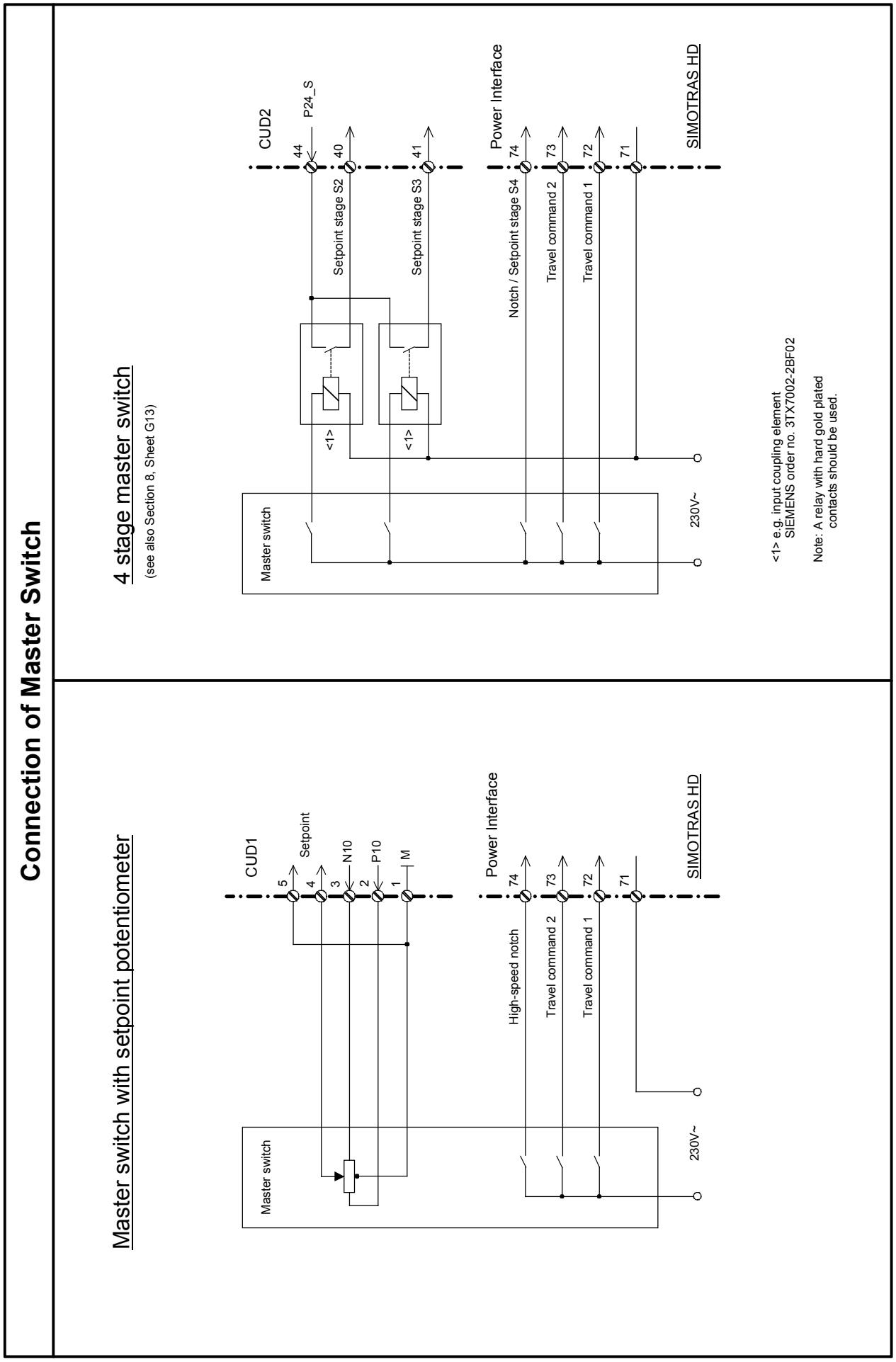
Connection of Master Switch
4 stage master switch
(see also Section 8, Sheet G13)
CUD2
P24_S
44
40
41
Setpoint stage S2
Setpoint stage S3
<1>
<1>
Power Interface
74
73
72
71
Notch / Setpoint stage S4
Travel command 2
Travel command 1
SIMOTRAS HD
Master switch
230V~
<1> e.g. input coupling element
SIEMENS order no. 3TX7002-2BF02
Note: A relay with hard gold plated
contacts should be used.
Master switch with setpoint potentiometer
CUD1
5
4
3
2
1
Setpoint
N10
P10
M
Power Interface
74
73
72
71
High-speed notch
Travel command 2
Travel command 1
SIMOTRAS HD
Master switch
230V~

Drive-specific (crane) control

The drive-specific (crane) control is integrated in the SIMOTRAS HD converter. It is made up of the freely assignable function blocks (technology software S00). The freely assignable function blocks are shown in Section 8, sheets B100 to B216. In the factory settings for the relevant parameters, these function blocks are connected to the drive-specific (crane) control as shown in Section 8, sheets K1 to K18.

The drive-specific (crane) control has been designed to simplify the switchover between the master switch with setpoint potentiometer and the 4-stage master switch:

U251 = 0: Master switch with setpoint potentiometer
U251 = 1 4 stage master switch

The control functions can be entered via the terminals or PROFIBUS (SINEC L2 DP). If a T300 technology board and/or a CBP board is inserted, the control functions are automatically entered from the T300 or from PROFIBUS. The terminals 36, 37, 39 and 72 to 79 have no function. The bit assignments for the control inputs on the PROFIBUS are shown on sheets K4 and K5 in Section 8.

The following diagram shows the arrangement of the pre-limit switches and the limit switches, together with the direction of the travel command as required for operating the crane control.

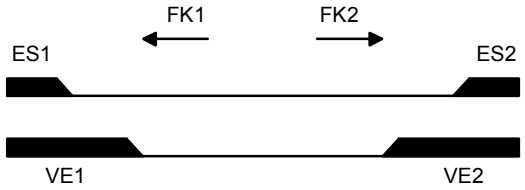

FK1: Travel command 1
VE1: Pre-limit switch 1
ES1: Limit switch 1

FK2: Travel command 2
VE2: Pre-limit switch 2
ES2: Limit switch 2

6.2 Installation instructions for proper EMC installation of drives

NOTE

These installation instructions do not purport to handle or take into account all of the equipment details or versions or to cover every conceivable operating situation or application.
If you require more detailed information, or if special problems occur, which are not handled in enough detail in this document, please contact your local Siemens office.

The contents of these installation instructions are not part of an earlier or existing agreement or legal contract and neither do they change it. The actual purchase contract represents the complete liability of the A&D Variable-Speed Drives Group of Siemens AG. The warrant conditions, specified in the contract between the two parties, is the only warranty which will be accepted by the A&D Variable-Speed Drives Group. The warranty conditions specified in the contract are neither expanded nor changed by the information provided in the installation instructions.

6.2.1 Fundamental principles of EMC

6.2.1.1 What is EMC

EMC stands for "electromagnetic compatibility" and defines the capability of a piece of equipment to operate satisfactorily in an electromagnetic environment without itself causing electromagnetic disturbances that would adversely affect other items of equipment in its vicinity.

Thus, different items of equipment must not adversely affect one another.

6.2.1.2 Noise radiation and noise immunity

EMC is dependent on two characteristics of the equipment/units involved, i.e. radiated noise and noise immunity. Items of electrical equipment can either be fault sources (transmitters) and/or noise receivers.
Electromagnetic compatibility exists if the fault sources do not adversely affect the function of the noise receivers.
An item of equipment can be both a noise source and a noise receiver. For example, the power section of a converter must be regarded as a noise source and the control section as a noise receiver.

6.2.1.3 Limit values

Electrical drives are governed by Product Standard EN 61800-3. According to this standard, it is not necessary to implement all EMC measures for industrial supply networks. Instead, a solution adapted specifically to the relevant environment can be applied. Accordingly, it may be more economical to increase the interference immunity of a sensitive device rather than implementing noise suppression measures for the converter. Thus, solutions are selected depending on their cost-effectiveness.

SIMOTRAS HD converters are designed for industrial applications (industrial low-voltage supply system, i.e. a system that does not supply domestic households).

Noise immunity defines the behaviour of a piece of equipment when subjected to electromagnetic disturbance. The Product Standard regulates the requirements and assessment criteria for the behaviour of equipment in industrial environments. The converters in this description comply with this Standard (Section 6.2.2.3).

6.2.1.4 Using SIMOTRAS HD in an industrial environment

In an industrial environment, equipment must have a high level of noise immunity whereas lower demands are placed on noise radiation.
SIMOTRAS HD converters are components of an electrical drive system in the same way as contactors and switches. Properly qualified personnel must integrate them into a drive system consisting, at least, of the converter, motor cables and motor. In most cases fuses will also be required. Limit values can only be maintained if these components are installed and mounted in the correct way. In order to limit the mains-borne radiated noise according to limit value "A1", the appropriate radio interference suppression filter is required in addition to the converter itself. Without an RI suppression filter, the noise radiated by a SIMOTRAS HD converter exceeds limit value "A1" as defined by EN55011.

If the drive forms part of a complete installation, it does not initially have to fulfil any requirements regarding radiated noise. However, EMC legislation requires the installation as a whole to be electromagnetically compatible with its environment.
If all control components in the crane system have noise immunity for industrial environments, it is not necessary for each drive to meet limit value "A1" in its own right.

6.2.1.5 Non-grounded supply systems

Non-grounded supply systems (IT systems) are used in a number of industrial sectors in order to increase plant availability. In the event of a ground fault, no fault current flows so that the plant can still operate. When RI suppression filters are installed, however, a ground fault does cause a fault current to flow, resulting in shutdown of the drives and, in some cases, destruction of the suppression filter. For this reason, the Product Standard does not define limit values for these supply systems. From the economic viewpoint, RI suppression should, if required, be implemented on the grounded primary side of the supply transformer.

For the use of RFI suppression filters in non-grounded networks (IT systems) choose filter types compatible for IT systems.

Note:
The voltage is detected via high-resistance resistor chains (1.510 kΩ for 575-V-units; 1.810 kΩ for 690-V-units). This resistance with respect to ground must be taken into account during the project work.

6.2.1.6 EMC planning

If two units are not electromagnetically compatible, you can either reduce the noise radiated by the noise source, or increase the noise immunity of the noise receiver. Noise sources are generally power electronics units with a high power consumption. To reduce the radiated noise from these units, complex, costly filters are required. Noise receivers are predominantly control equipment and sensors including evaluation circuitry. Increasing the noise immunity of less powerful equipment is generally easier and cheaper. In an industrial environment, therefore, it is often more cost-effective to increase noise immunity rather than reduce radiated noise. For example, in order to adhere to limit value class A1 of EN 55011, the noise suppression voltage at the mains connection may be max. 79 dB (μV) between 150 kHz and 500 kHz and max. 73 dB (μV) (9 mV or 4.5 mV) between 500 kHz and 30 MHz.
In industrial environments, the EMC of the equipment used must be based on a well-balanced mixture of noise radiation and noise immunity.

The most cost-effective RI suppression measure is the physical separation of noise sources and noise receivers, assuming that it has already been taken into account when designing the machine/plant. The first step is to define whether each unit is a potential noise source (noise radiator or noise receiver). Noise sources are, for example, PLCs, transmitters and sensors. Examples of noise receivers are PLCs, encoders and sensors.
Components in the control cabinet (noise sources and receivers) must be physically separated, if necessary through the use of metal partitions or metal enclosures for individual components. Figure 1 shows an example component layout in a control cabinet.

6.2.2 Proper EMC installation of drives (installation instructions)

6.2.2.1 General

Since drives can be operated in a wide range of differing environments and the electrical components used (controls, switched-mode power supplies, etc.) can differ widely with respect to noise immunity and radiation, any mounting/installation guideline can only represent a practical compromise. For this reason, EMC regulations do not need to be implemented to the letter, provided that measures are checked out on a case by case basis.

In order to guarantee electromagnetic compatibility in your cabinets in rugged electrical environments and fulfil the standards specified by the relevant regulatory bodies, the following EMC regulations must be observed when designing and installing cabinets.

Rules 1 to 10 generally apply. Rules 11 to 15 must be followed to fulfil standards governing radiated noise.

6.2.2.2 Rules for proper EMC installation

Rule 1
All the metal components in the cabinet must be conductively connected over a large surface area with one another (not paint on paint!). Serrated or contact washers must be used where necessary. The cabinet door should be connected to the cabinet through the shortest possible grounding straps (top, center, bottom)..

Rule 2
Contactors, relays, solenoid valves, electromechanical hours counters, etc. in the cabinet, and, if applicable, in adjacent cabinets, must be provided with quenching elements, for example, RC elements, varistors, diodes. These devices must be connected directly at the coil.

Rule 3
Signal cables [1)] should enter the cabinet at only one level wherever possible.

Rule 4
Unshielded cables in the same circuit (incoming and outgoing conductors) must be twisted where possible, or the area between them kept as small as possible in order to prevent unnecessary coupling effects.

Rule 5
Connect spare conductors to the cabinet ground (ground [2)]) at both ends to obtain an additional shielding effect.

Rule 6
Avoid any unnecessary cable lengths in order to reduce coupling capacitances and inductances.

Rule 7
Crosstalk is kept low if cables are routed close to the cabinet ground. For this reason, wiring should not be routed freely in the cabinet, but as close as possible to the cabinet frame and mounting panels. This applies equally to spare cables.

Rule 8
Signal and power cables must be routed separately from one another (to prevent noise from being coupled in). A minimum 20 cm clearance should be maintained.
If the encoder cables and motor cables cannot be routed separately, then the encoder cable must be decoupled by means of a metal partition or installation in a metal pipe or duct. The partition or metal duct must be grounded at several points.

Rule 9
The shields of digital signal cables must be connected to ground at both ends (source and destination). If there is poor potential bonding between the shield connections, an additional potential bonding cable of at least 10 mm² must be connected in parallel to the shield to reduce the shield current. Generally speaking, the shields can be connected to the cabinet housing (ground[2)]) at several points. The shields may also be connected at several locations outside the cabinet. Foil-type shields should be avoided. Their shielding effect is poorer by a factor of 5 as compared to braided shields.

Rule 10
The shields of analog signal cables may be connected to ground at both ends (conductively over a large area) if potential bonding is good. Potential bonding can be assumed to be good if all metal parts are well connected and all the electronic components involved are supplied from the same source.
The single-ended shield connection prevents low-frequency, capacitive noise from being coupled in (e.g. 50 Hz hum). The shield connection should then be made in the cabinet. In this case, the shield may be connected by means of a sheath wire.

The cable to the temperature sensor on the motor (X174:22 und X174:23) must be shielded and connected to ground at both ends.

Rule 11
The RI suppression filter must always be mounted close to the suspected noise source. The filter must be mounted over the largest possible area with the cabinet housing, mounting plate, etc. Incoming and outgoing cables must be routed separately.

Rule 12
To ensure adherence to limit value class A1, the use of RI suppression filters is obligatory. Additional loads must be connected on the line side of the filter.

The control system used and the other wiring in the cubicle determines whether an additional line filter needs to be installed.

Rule 13
Unshielded motor cables may be used in SIMOTRAS HS drive systems.
The line supply cable must be routed at a distance of at least 20 cm from the motor cables (stator, rotor). Use a metal partition if necessary.

Footnotes:

1) Signal cables are defined as:

Digital signal cable:	Analog signal cable.:
Pulse encoder cables	e.g. ± 10 V setpoint cable
Serial interfaces, e.g. PROFIBUS-DP	

2) The term "Ground" generally refers to all metallic, conductive components which can be connected to a protective conductor, e.g. cabinet housing, motor housing, foundation grounder, etc.

Cabinet design and shielding:

The cabinet design illustrated in **Figure 1** is intended to make the user aware of EMC-critical components. The example does not claim to include all possible cabinet components and their respective mounting possibilities.

Details which influence the noise immunity/radiation of the cabinet and are not absolutely clear in the overview diagram are described in **Figures 1a - 1d**.

Figures 2a -2d show details of different shield connection techniques with ordering source information.

Arrangement of RI suppression filters:

Section 6.2.2.3 shows how RI suppression filters are arranged in the SIMOTRAS HD system. The specified sequence for installing the filters must be observed. Fuses for semiconductor protection are selected according to Section 6.4.

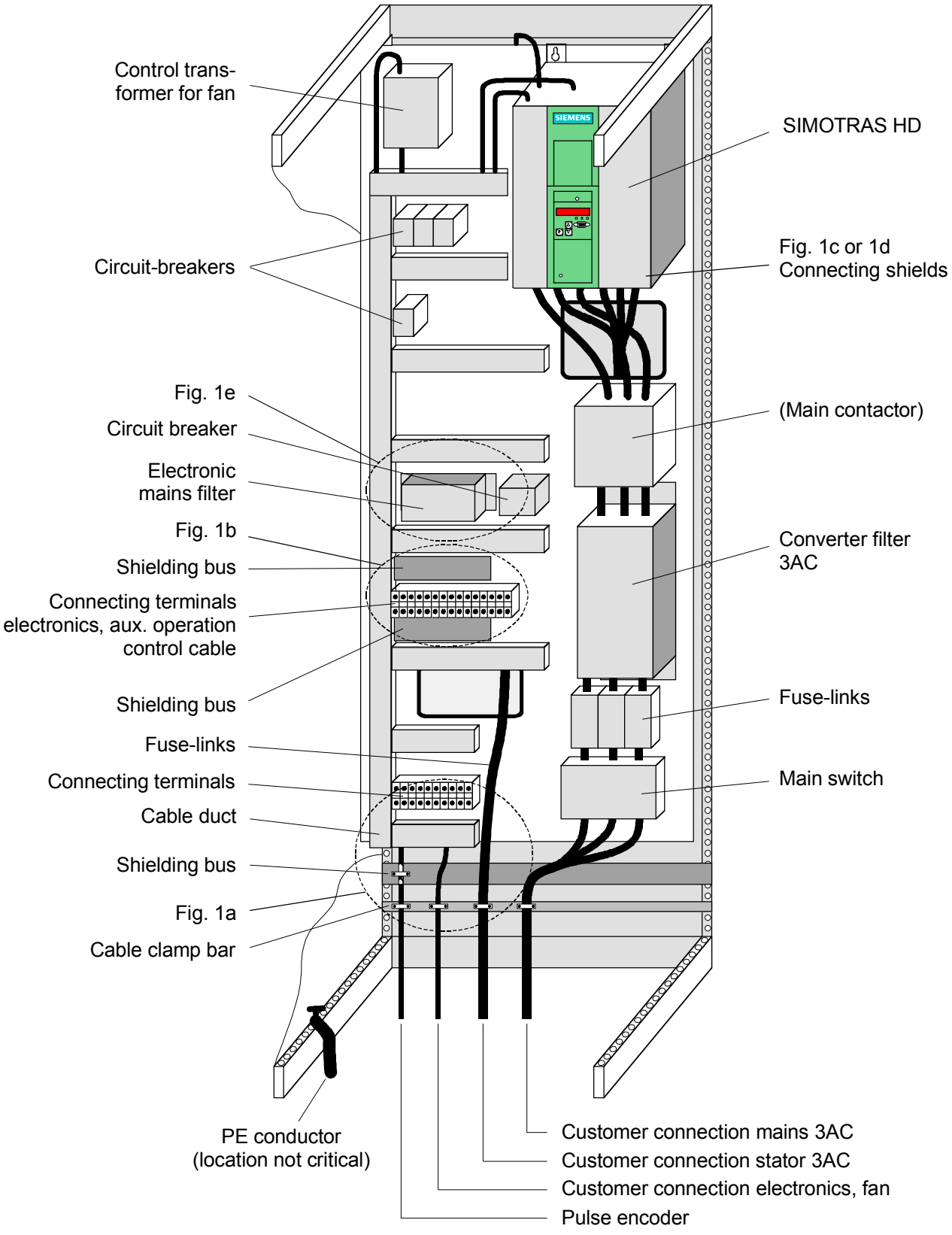

Fig. 1: Example of a cabinet design with a SIMOTRAS HD

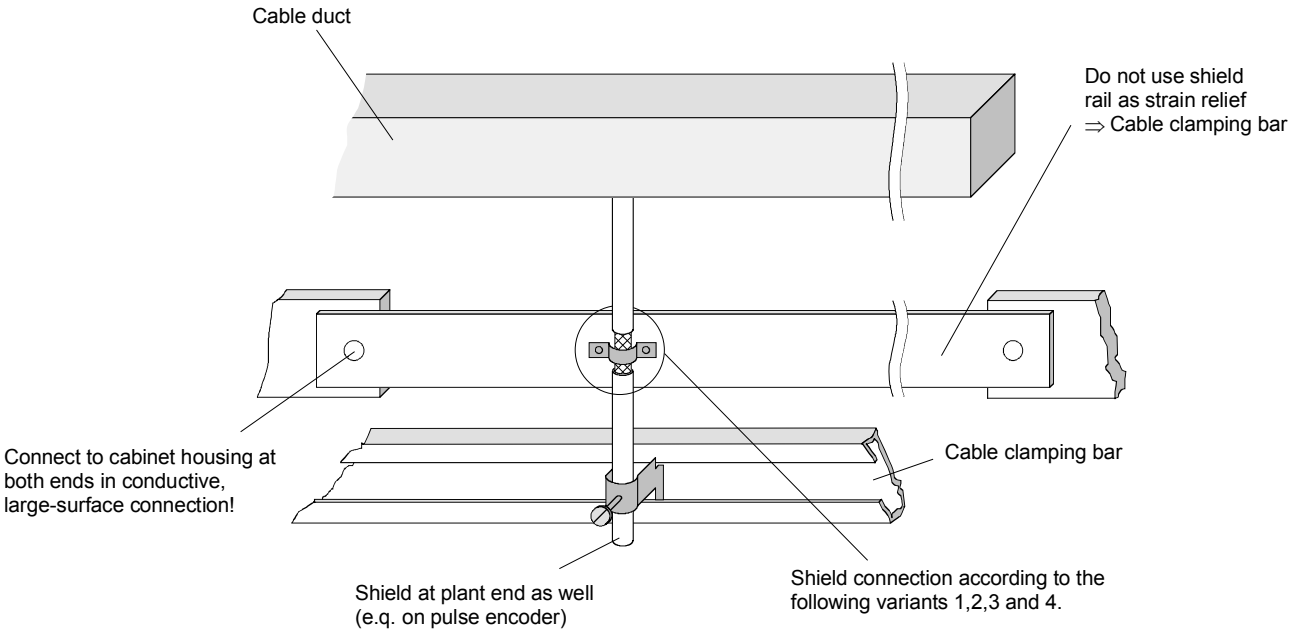

Fig. 1a: Shield at cable entry point to cabinet

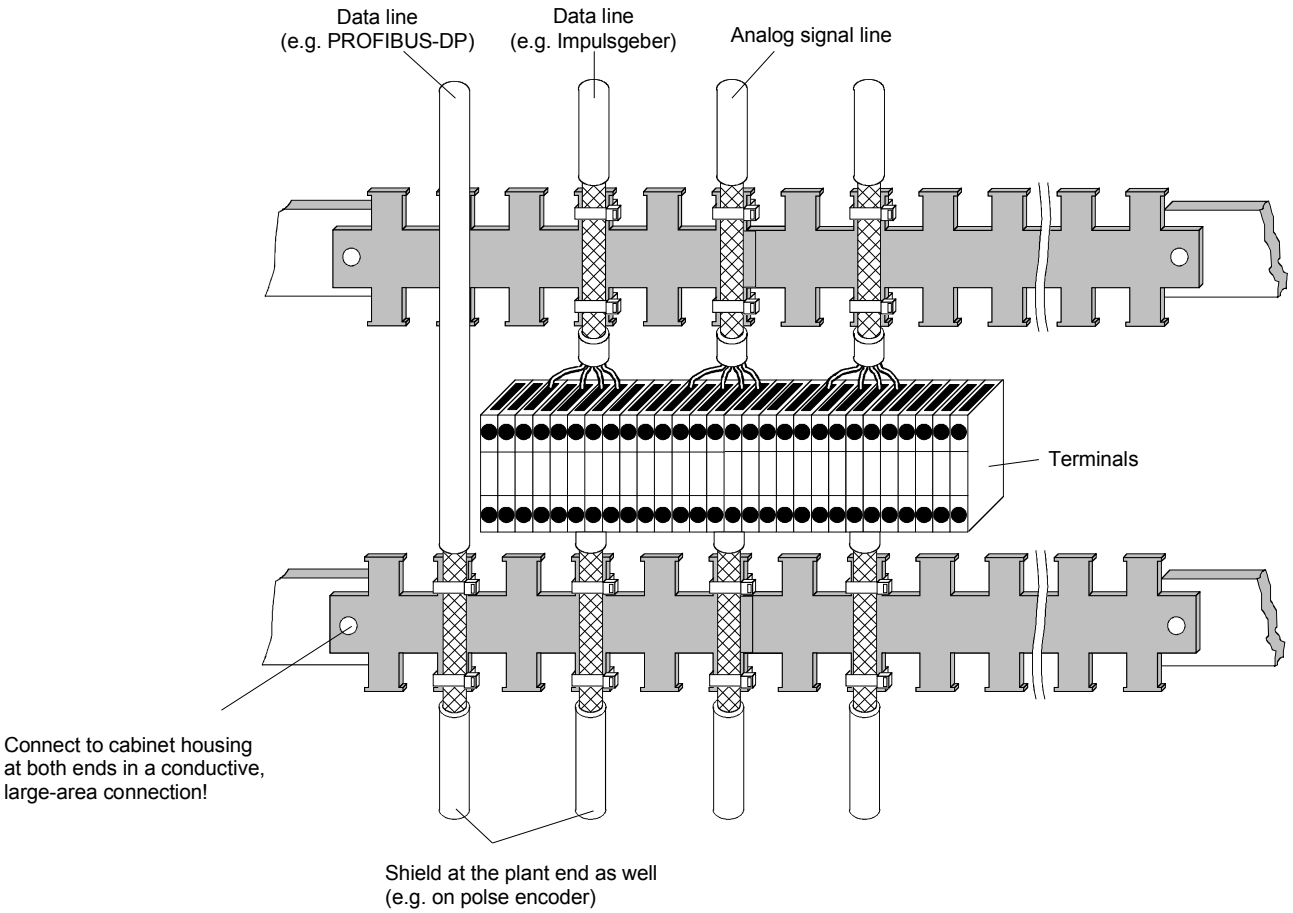

Fig. 1b: Shielding in the cabinet

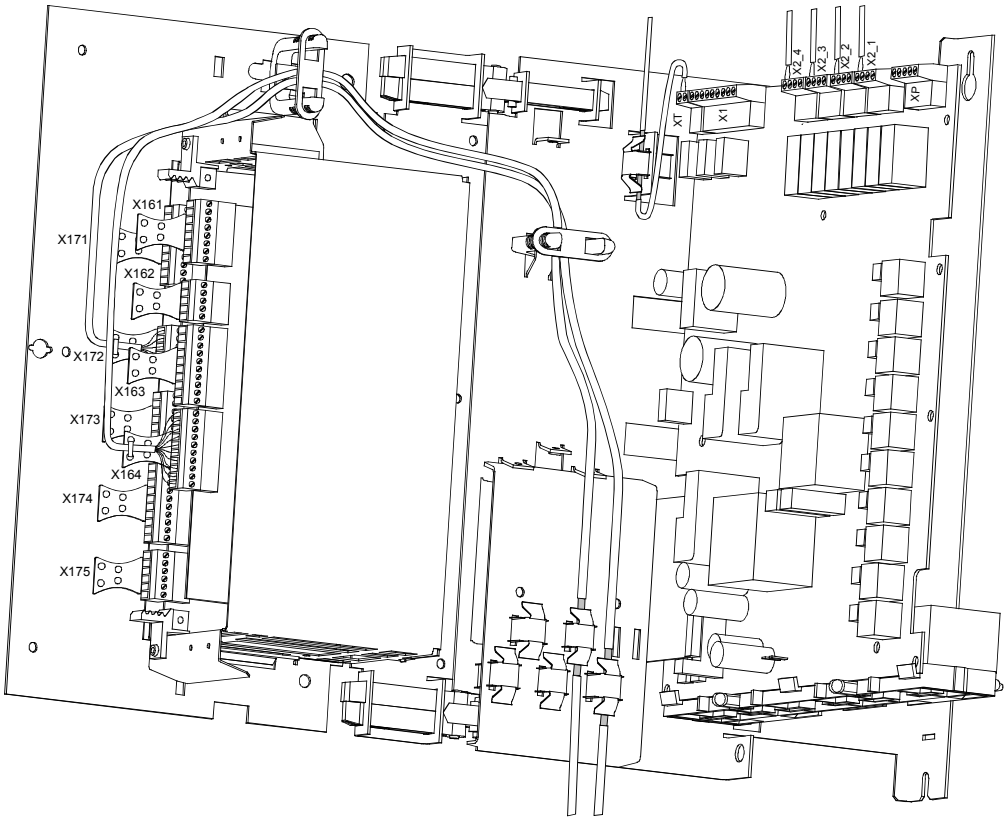

Fig. 1c: Connecting shields on a SIMOTRAS HD D400 / 60-280 Mre converter

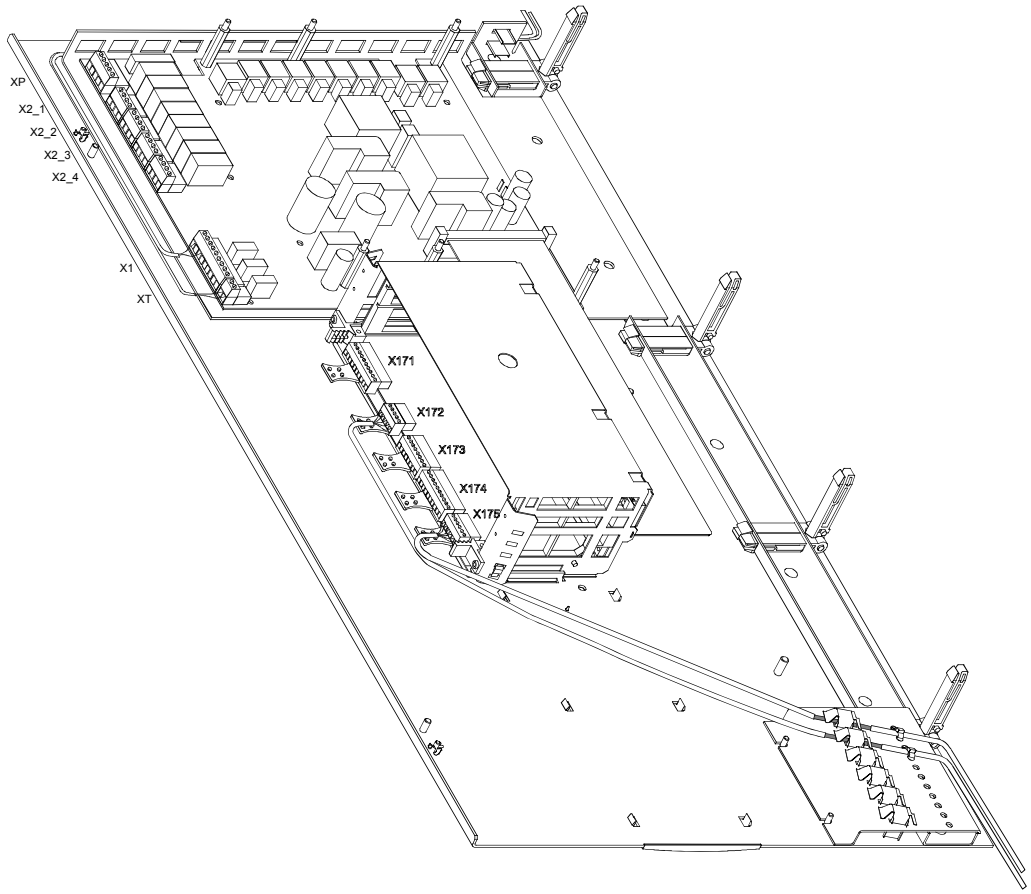

Fig. 1d: Connecting shields on a SIMOTRAS HD D400 / 900 Mre converter

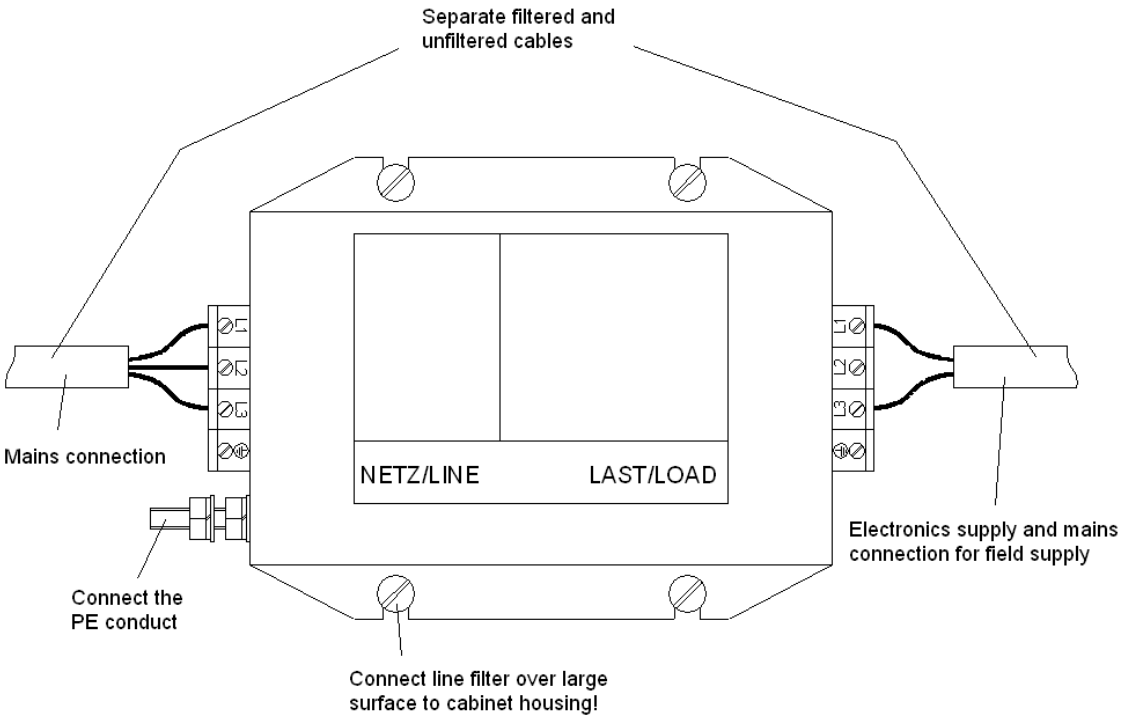

Fig. 1e: Line filter for SIMOTRAS HD 6SG70 electronics power supply

Note:

Rule 12 in Section 6.2.2.2 shows why it is necessary to install a line filter.

Shield connections:

Variant 1:

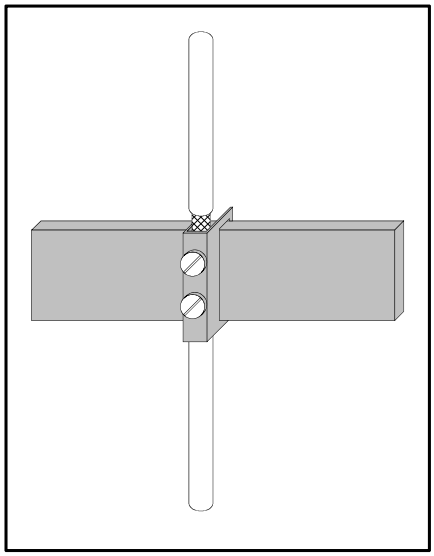

Fig. 2a: Terminal on copper busbar, max. cable diameter 15 mm

Variant 2:

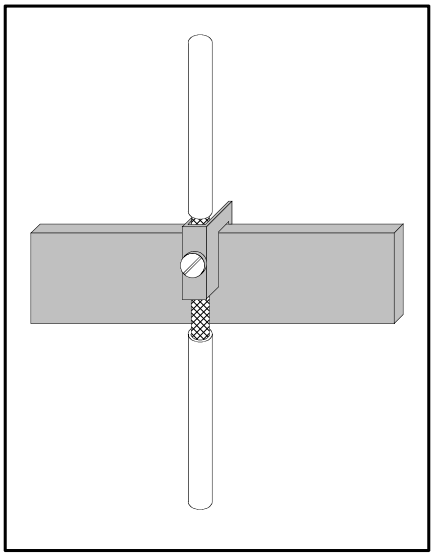

Fig. 2b: Terminal on copper busbar, max. cable diameter 10 mm

Important !

The conductor might be damaged if the terminal screw is over-tightened.

Note:

Connecting terminals:
5 mm busbar thickness
Order No. 8US1921-2AC00
10 mm busbar thickness
Order No. 8US1921-2BC00

Note:

Terminals:
Order No. 8HS7104,
8HS7104, 8HS7174, 8HS7164

Variant 3:

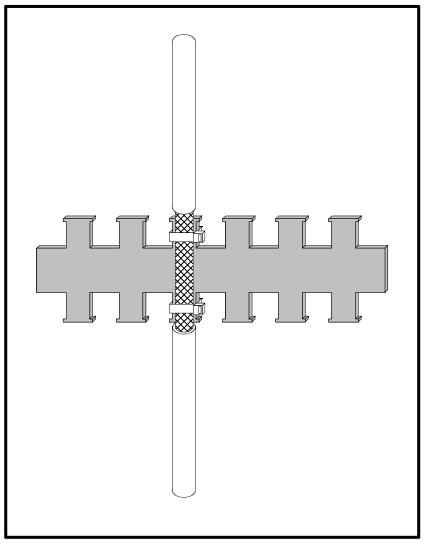

Fig. 2c: Metallized tubing or cable ties on a bare metal comb-type/serrated rail

Note:

Comb-type rail:
Item No. J48028

Ordering address:

SIEMENS AG ANL A443 KA
Günther-Scharowsky-Str. 2
Betriebe Süd
91058 Erlangen
Germany

Variant 4:

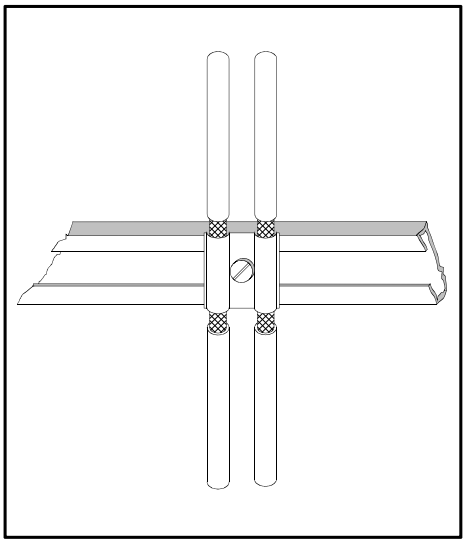

Fig. 2d: Clamp and metallic mating piece on a cable clamping rail

Note:

Siemens 5VC55... cable clamps;
Clamping rails in various sizes:
Item No. K48001 to 48005

Ordering address:

SIEMENS AG ANL A443 KA
Günther-Scharowsky-Str. 2
Betriebe Süd
91058 Erlangen
Germany

6.2.2.3 Arrangement of components for converters

Arrangement of filters

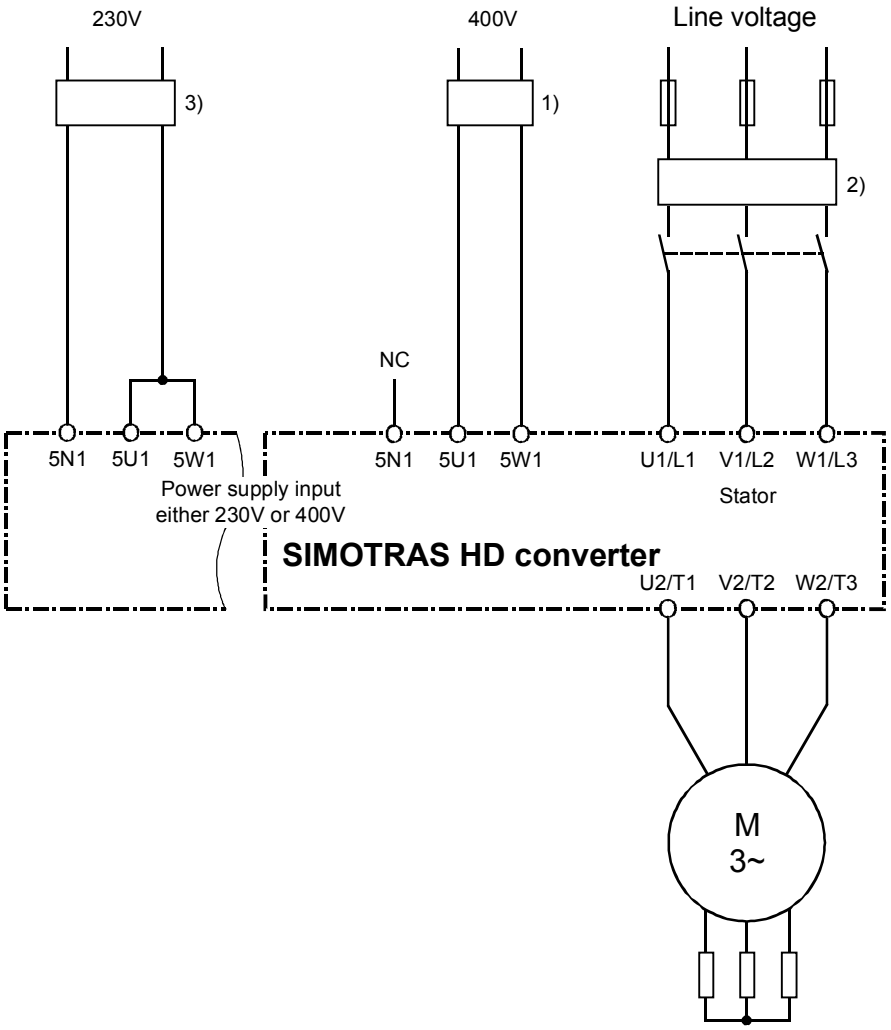

1) The filter for the electronics power supply is dimensioned for 1.1 A.
2) The filter for the stator circuit is dimensioned for the rated motor current.
3) The filter for the electronics power supply is dimensioned for 2 A.

6.2.2.4 RI suppression filters

Suggested types (depending on rated current):

- B84143G*R110
- B84143B*S020...S024

from EPCOS http://www.epcos.de

6.3 Parallel connection of converters

6.3.1 Circuit diagram showing parallel connection of SIMOTRAS converters

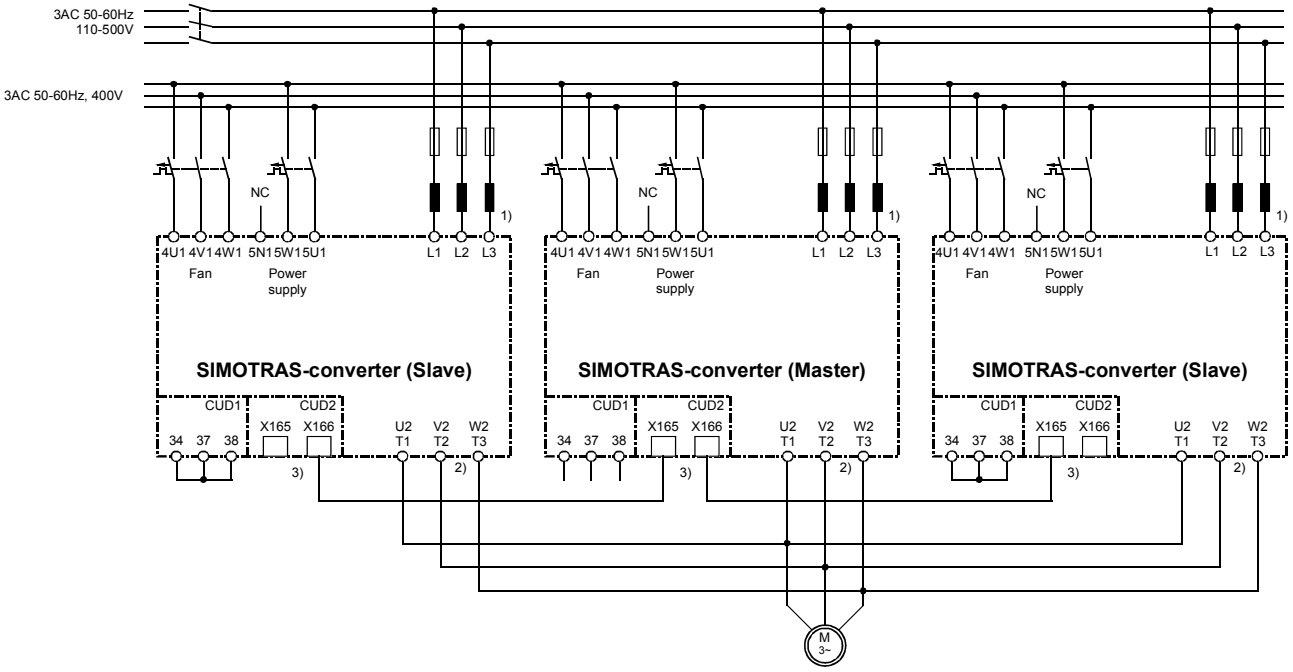

1) The same phase sequence is required between U1(L1) / V1(L2) / W1(L3).

2) The same phase sequence is required between U2(T1) / V2(T2) / W2(T3).

3) The converters are connected by means of an (8-pin) shielded Patch cable of type UTP CAT5 according to ANSI/EIA/TIA 568, such as those used in PC networking.
A standard 5 m cable can be ordered directly from Siemens (order number: 6RY1707-0AA08).
(n-1) cables are needed to connect n converters in parallel.
The bus terminator must be activated (U805=1) on the converter at each end of the bus.

Caution:
Parallel connections may only be made between converters with the same current rating!

The terminal expansion option (CUD2) is required for each converter in a parallel connection.

A maximum of 6 converters can be connected in parallel.
When several converters are connected in parallel, the master unit should be positioned in the center to allow for signal transit times. Maximum length of paralleling interface cable between master and slave converters at each end of bus: 15m.

For the purpose of current distribution, separate commutating reactors of the same type are required for each SIMOTRAS converter. Current distribution is determined by the differential reactor tolerance. A tolerance of 5% or better is recommended for operation without derating (reduced current).

Open-loop and closed-loop connections (rotor contactor, brake, tachometer, etc.) are only to be connected to the master (in accordance connecting suggestion in section 6.1).

6.3.2 Parameterization of SIMOTRAS converters for parallel connection

Master	**Slaves**
U800 = 1 Paralleling interface active	U800 = 2 Paralleling interface active Use master firing pulses
U803 = 0 "N+1 mode" not active	
U804.01 = 30 control word 1 U804.02 = 31 control word 2 U804.03 = 167 Actual speed value	U804.01 = 32 status word 1
U805 = 1 (bus termination) on the two end units (at both physical ends of the bus cable) 0 (no bus termination) on all other units	
U806.01 = 12 master for one slave 13 master for 2 slaves 14 master for 3 slaves 15 master for 4 slaves 16 master for 5 slaves Set U806.02 like U806.01	U806.01 = 2 1 slave U806.01 = 2 and 3 2 slaves U806.01 = 2, 3 and 4 3 slaves U806.01 = 2,3,4 and 5 4 slaves U806.01 = 2,3,4,5 and 6 5 slaves Set U806.02 like U806.01
Set P083 depending on the source of the actual speed value	P083 = 4 Freely connected actual speed value P609 = 6023 Use actual speed value of master
	P635.F = 167 Use actual speed value of master as setpoint
P100 = $\frac{\text{Rated motor current}}{\text{Number of SIMOTRAS units}}$	P100 = $\frac{\text{Rated motor current}}{\text{Number of SIMOTRAS units}}$
Set P648, P649 depending on the source of the control word	P648 = 6021 Use control word 1 from master P649 = 6022 Use control word 2 from master
	P820.01 = 23 Suppress fault message F023 P820.02 = 24 Suppress fault message F024 P820.03 = 31 Suppress fault message F031
	P821.01 = 23 Suppress alarm A023 P821.02 = 24 Suppress alarm A024 P821.03 = 31 Suppress alarm A031

For further details about the operating principle of parallel connections between SIMOTRAS converters, please refer to Section 8, Function Diagrams, Sheet G195 (paralleling interface).

Note:
All control commands (travel command 1, etc.) must be connected to a group of parallel-connected SIMOTRAS converters via the master device.

6.4 Power connections

D400 / 60 - 180 Mre converter (order no. 6SG7050 - 6SG7065)

see technical data in Section 3.4

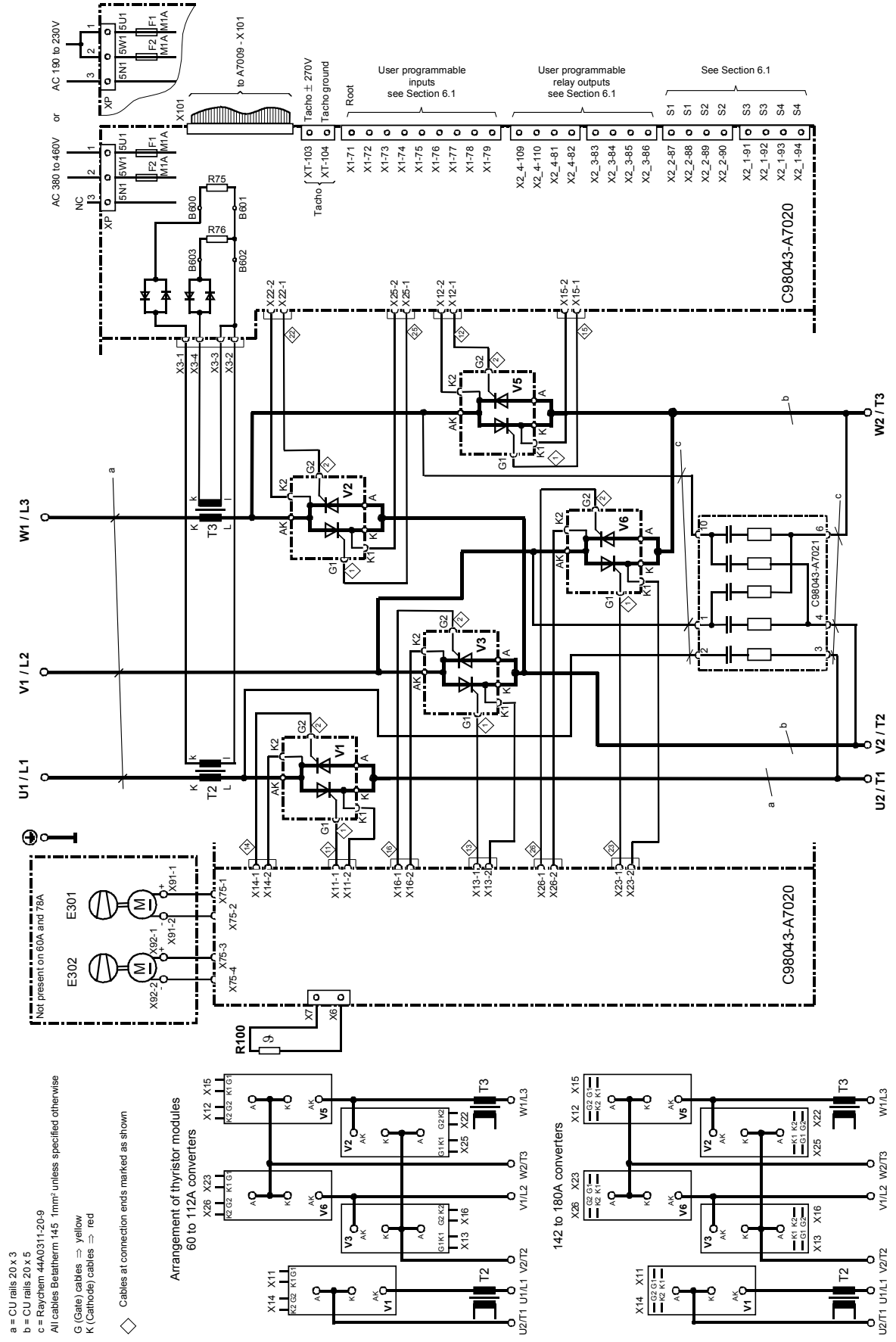

D400 / 225 -360 Mre converter (order no. 6SG7070 - 6SG7076)

see technical data in Section 3.4

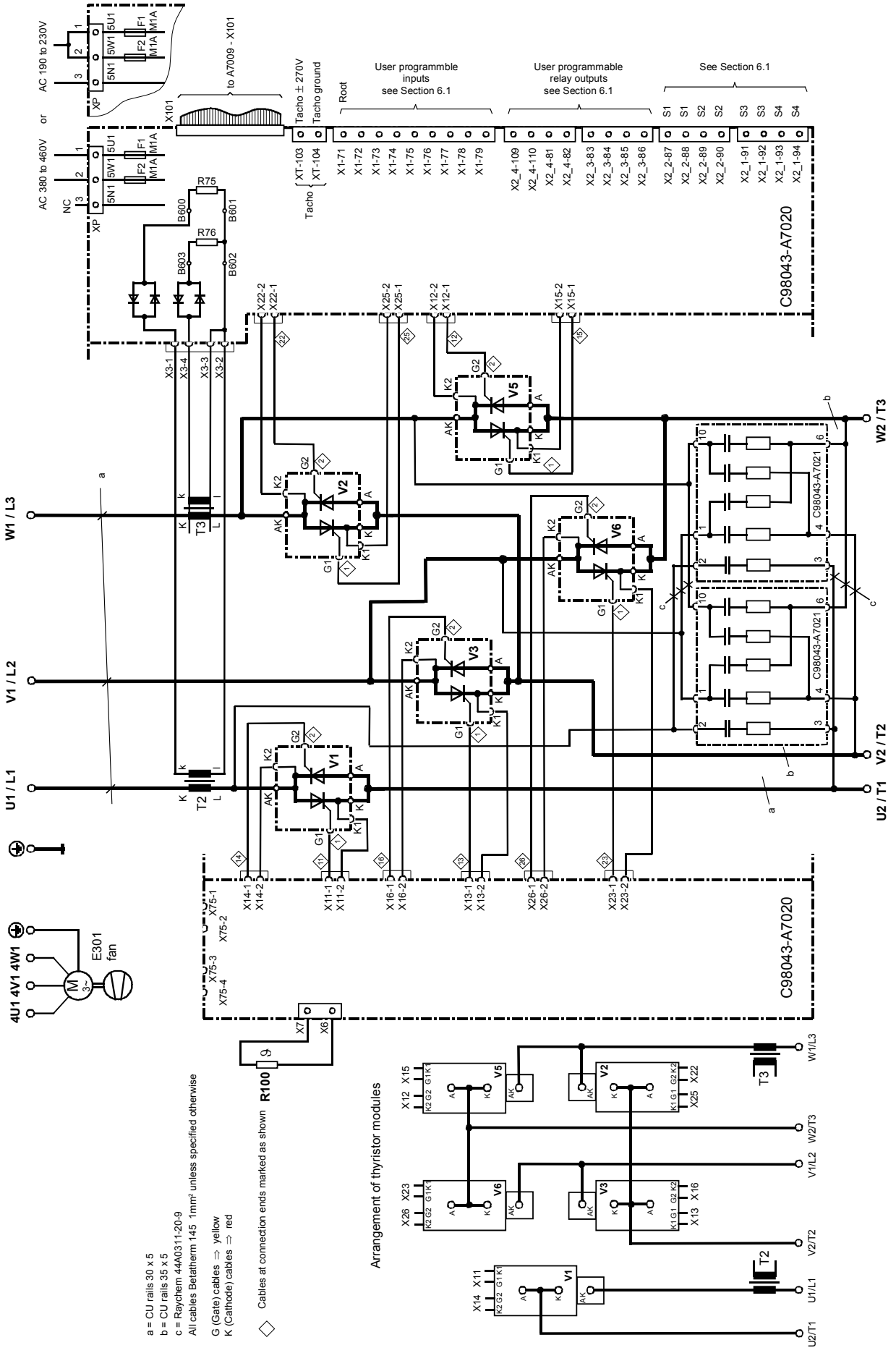

a = CU rails 30 x 5
b = CU rails 35 x 5
c = Raychem 44A0311-20-9
All cables Betatherm 145 1mm² unless specified otherwise

G (Gate) cables ⇒ yellow
K (Cathode) cables ⇒ red

◇ Cables at connection ends marked as shown

D400 / 525 -680 Mre converter (order no. 6SG7080 - 6SG7082)

see technical data in Section 3.4

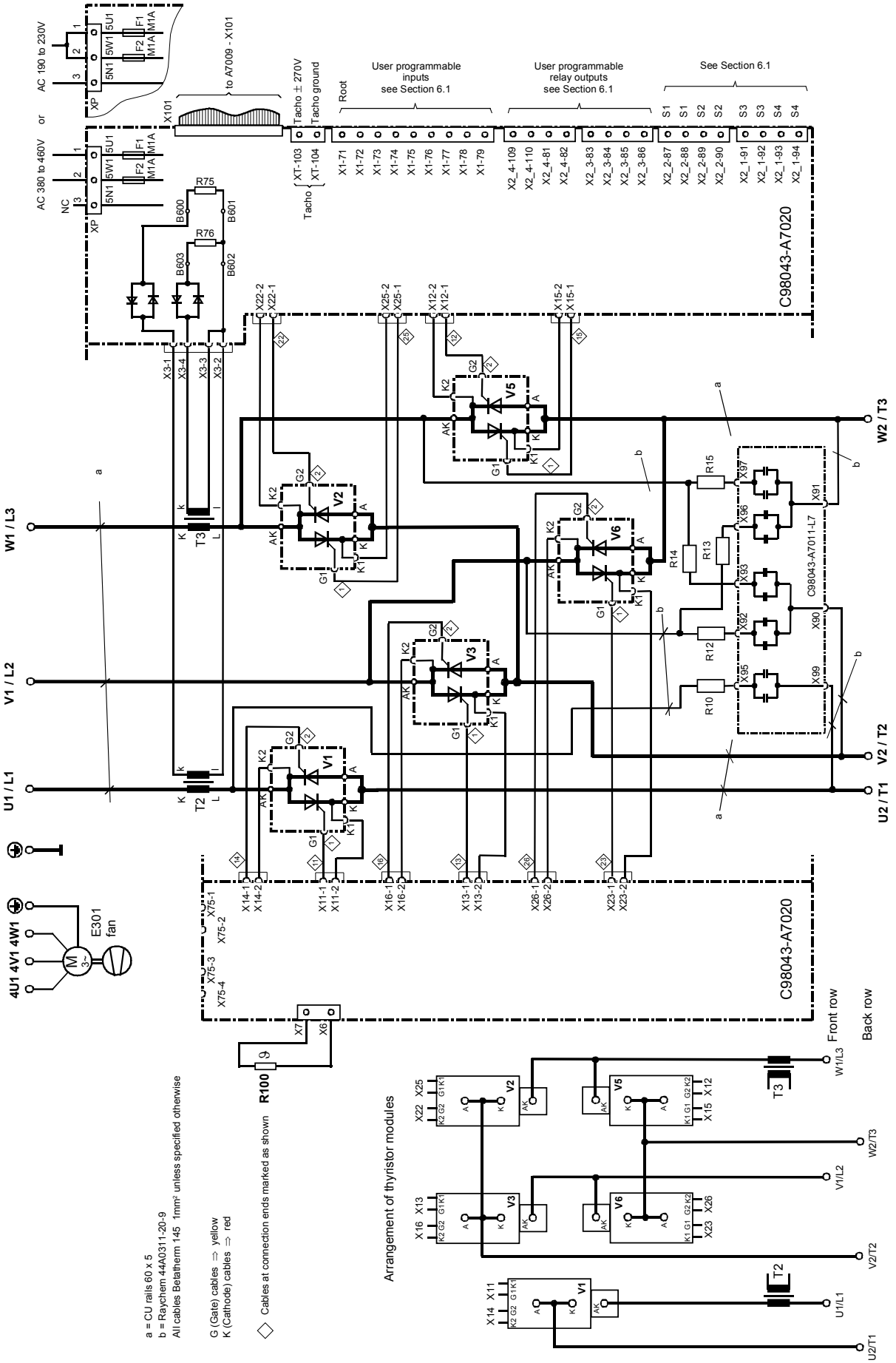

D400 / 900 Mre converter (order no. 6SG7085)

see technical data in Section 3.4

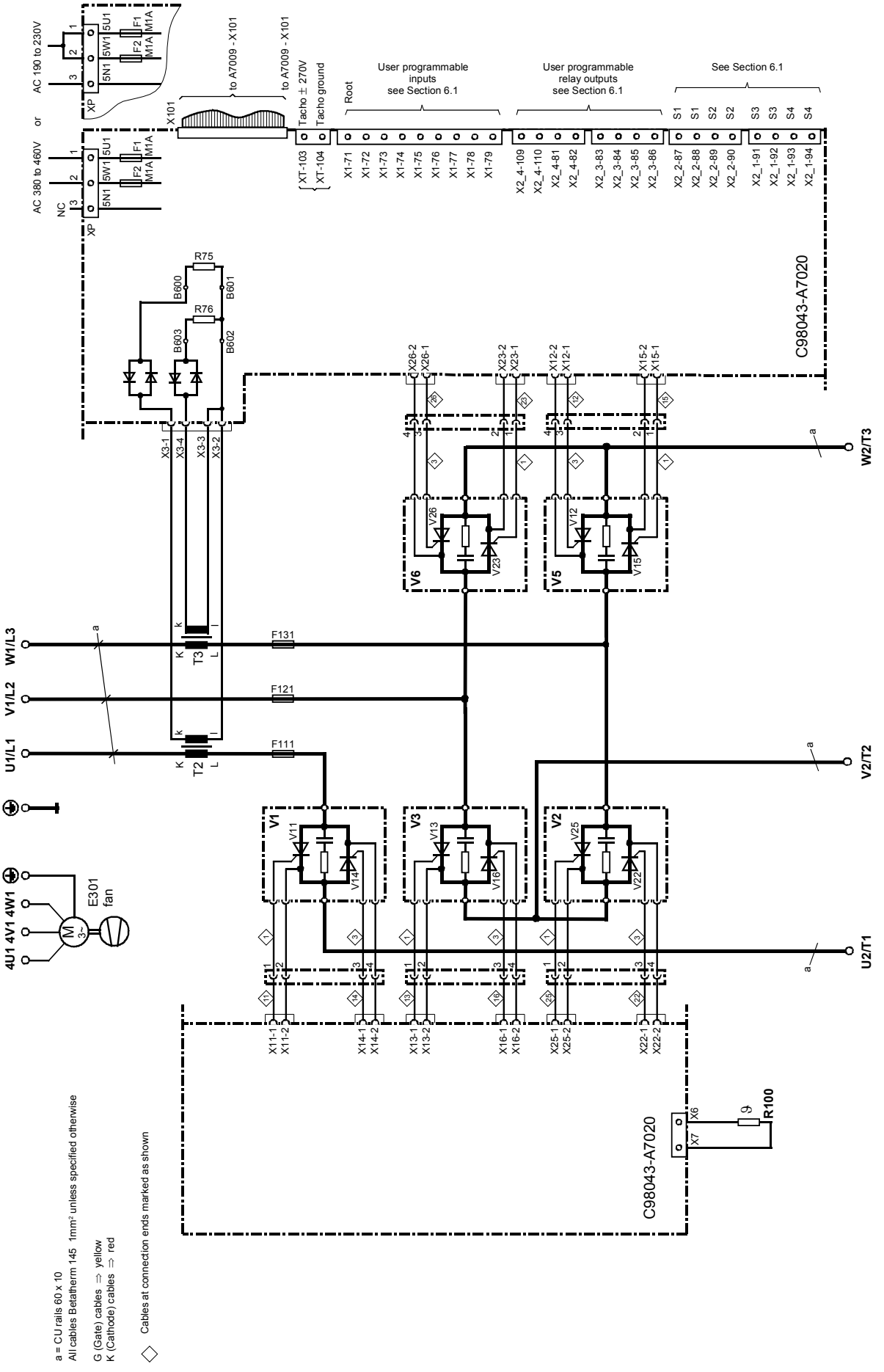

Arrangement of thyristor blocks

Rear level

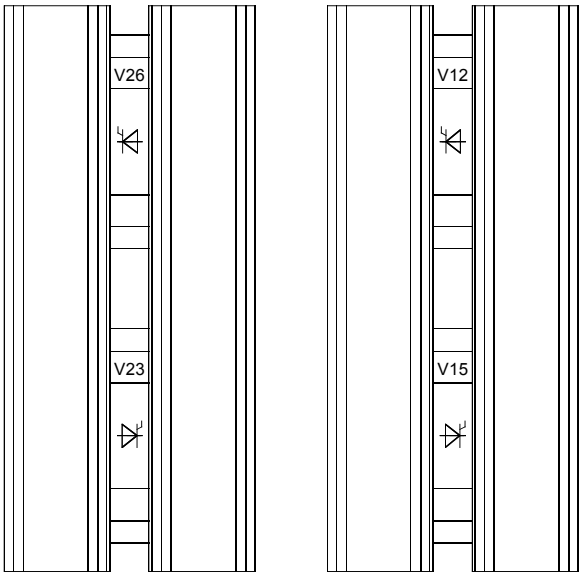

Front level

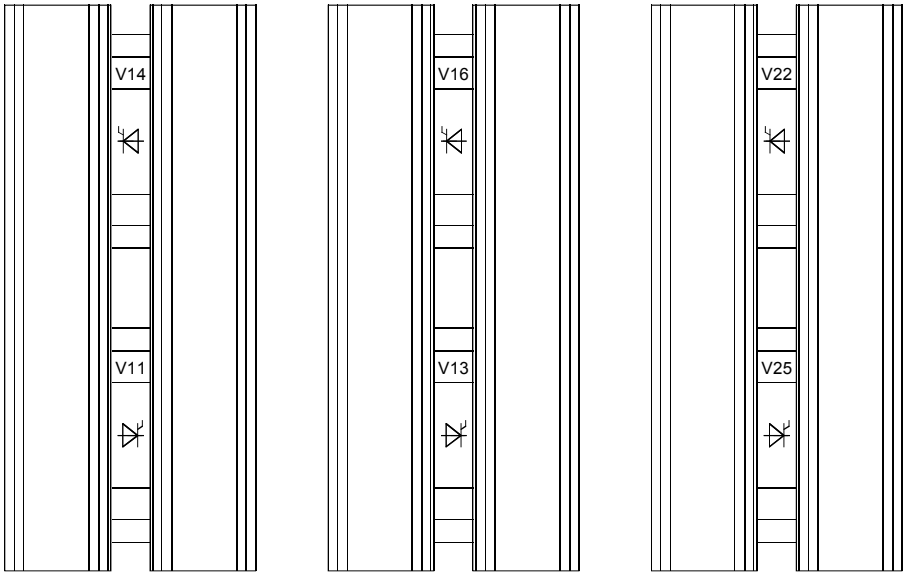

D500 / 360 Mre converter (order no. 6SG7076–0KB60)

see technical data in Section 3.4

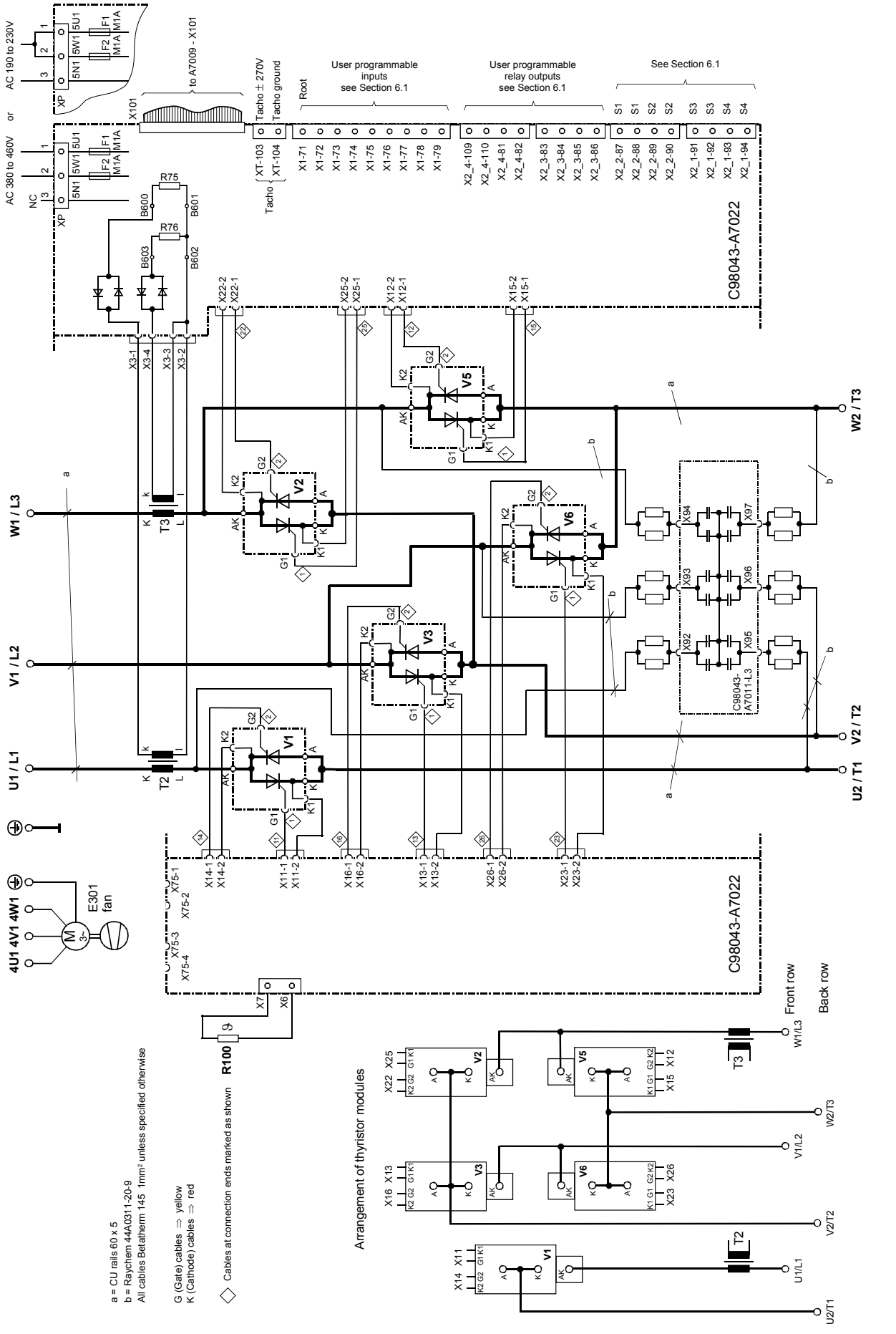

6.5 Fuses

For technical data, configuring data and dimension drawings, please refer to Catalog BETA, Section 4.

Converter Order No.	Rated current of		Line fuses 3	
	Standard	Option H78	Order No.	Rated current/ voltage
	A	A		A / V
6SG7050-0EB60	60	42	3NE1820-0	80 / 690
6SG7052-0EB60	78	55	3NE1021-0	100 / 690
6SG7055-0EB60	98	70	3NE1022-0	125 / 690
6SG7060-0EB60	112	80	3NE1224-0	160 / 690
6SG7062-0EB60	142	100	3NE1224-0	160 / 690
6SG7065-0EB60	180	125	3NE1225-0	200 / 690
6SG7070-0EB60	225	150	3NE1227-0	250 / 690
6SG7072-0EB60	285	200	3NE1331-0	350 / 690
6SG7076-0EB60	360	250	3NE1332-0	400 / 690
6SG7080-0EB60	525	365	3NE1435-0	560 / 690
6SG7082-0EB60	680	475	3NE3340-8	900 / 690
6SG7085-0EB60	900	700	6RY1702-0BA01 1)	1250 / 660

1) Fuses are included in converter, external semiconductor fuses are not needed.

Converter Order No.	Rated current	Line fuses 3	
		Order No.	Rated current/ voltage
	A		A / V
6SG7076-0KB60	360	3NE1332-0	400 / 690
6SG7076-0KB60 with Option H70	130	3NE1224-0	160 / 690

6.6 Terminal arrangement

Electronics module SIMOTRAS HD C98043-A7001 (CUD1)

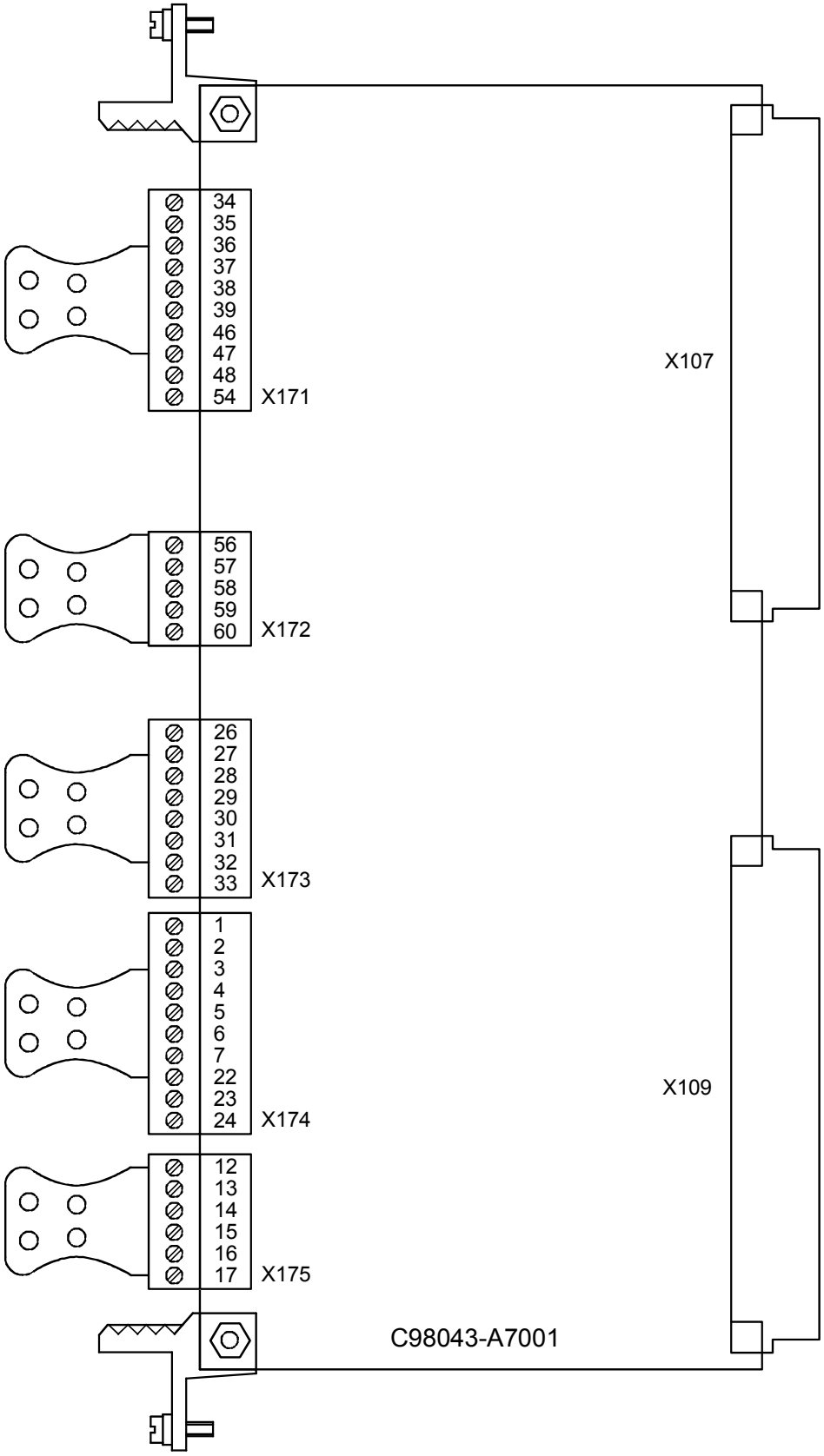

Module C98043-A7006 (CUD2)

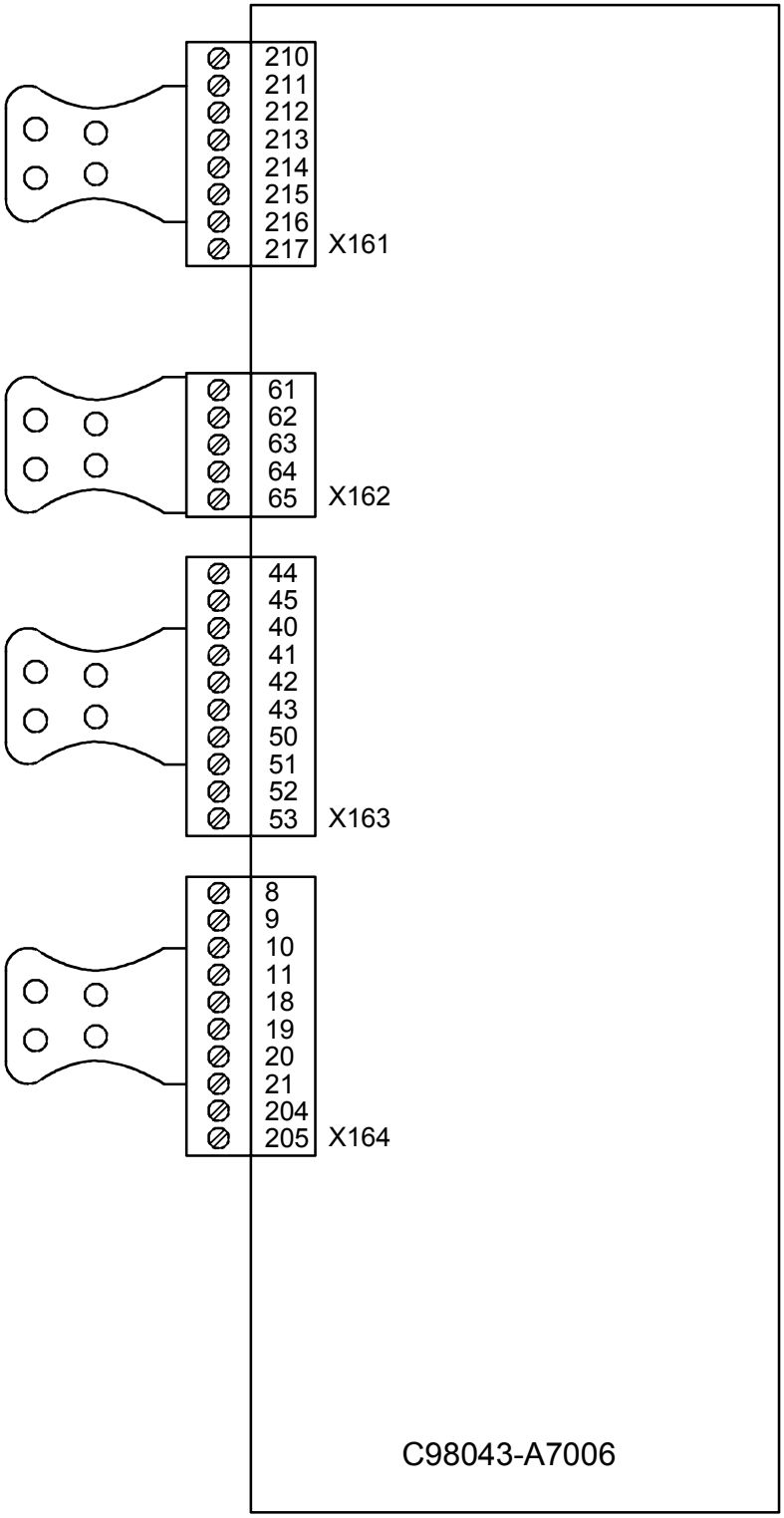

Module C98043-A7020, C98043-A7022

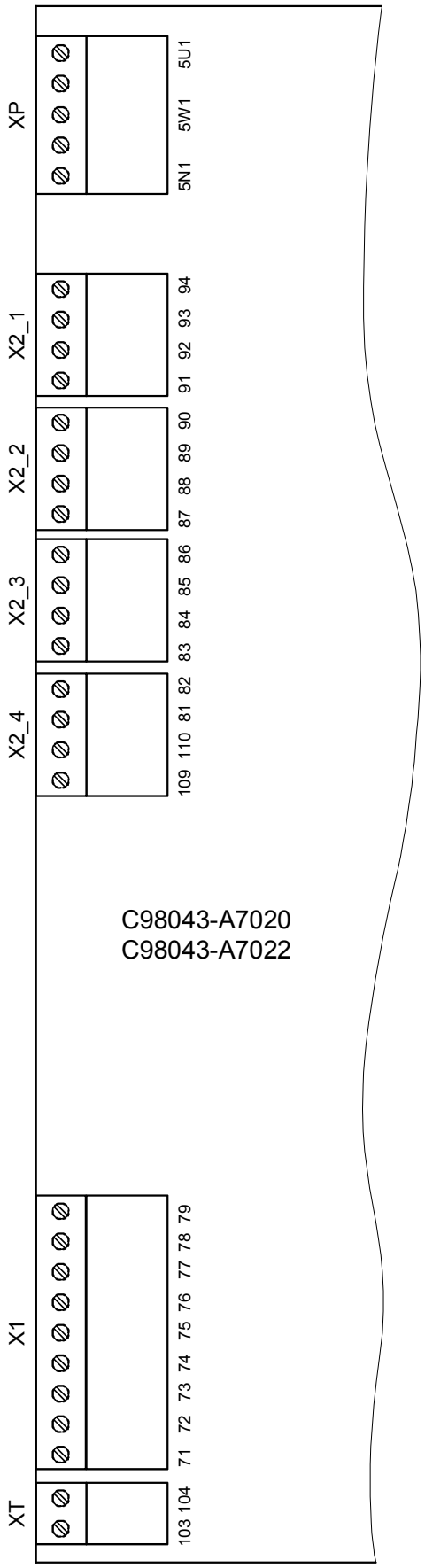

6.7 Terminal assignments

6.7.1 Overview of terminal connections on the C98043-A7001 (CUD1) electronics module

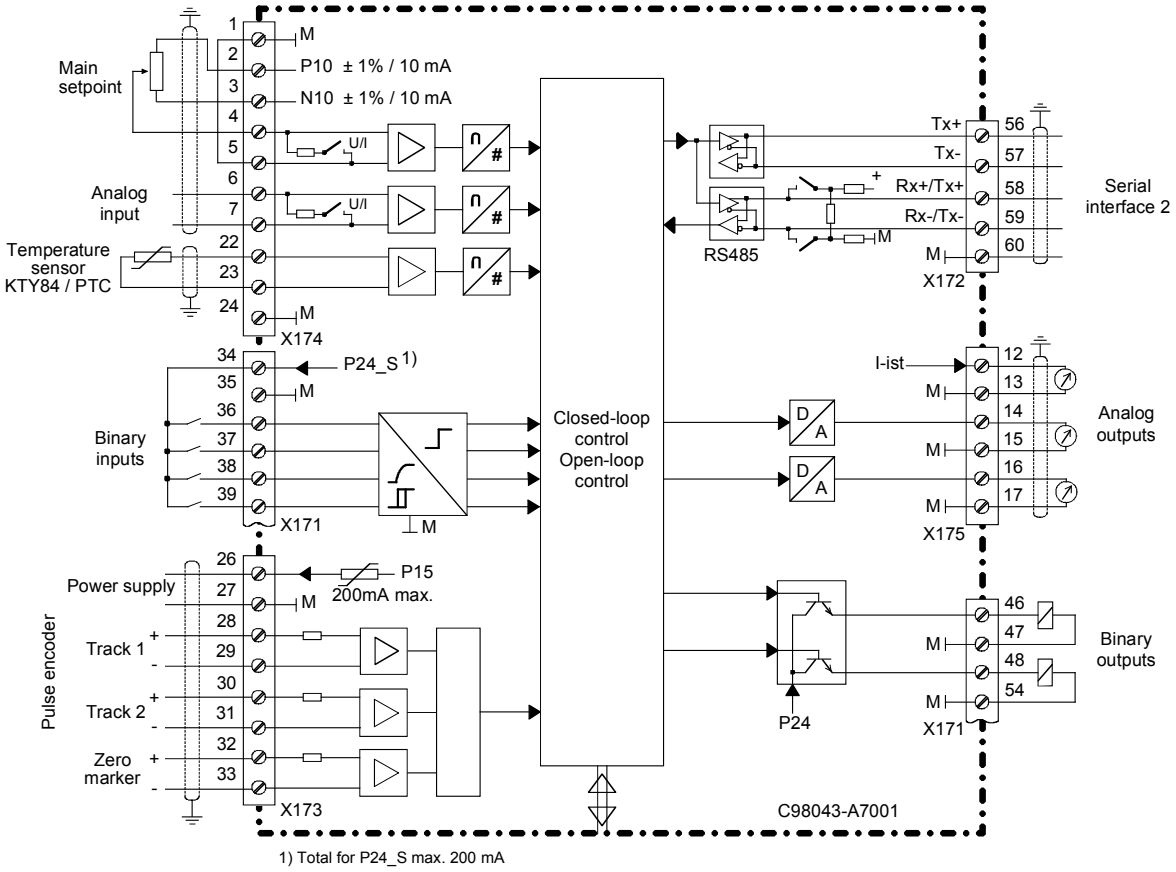

1) Total for P24_S max. 200 mA

6.7.2 Overview of terminal connections on the optional C98043-A7006 (CUD2) terminal expansion module

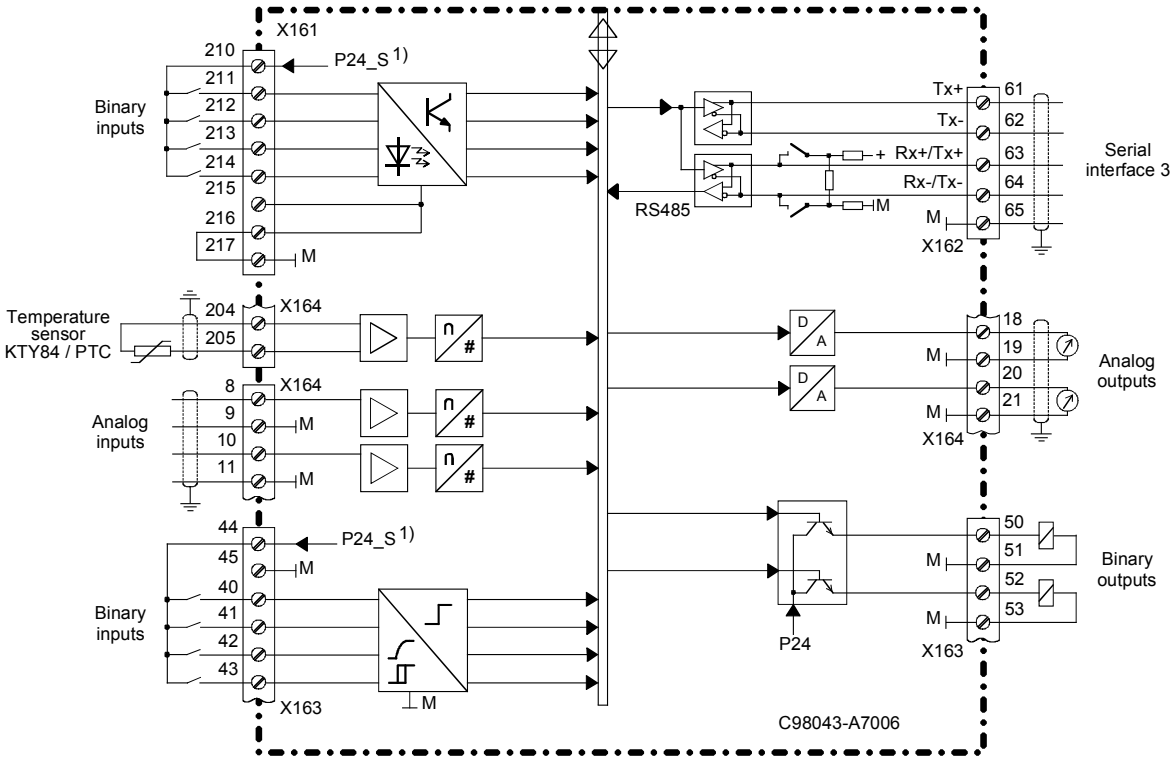

6.7.3 Terminal description



WARNING

The converter might sustain serious or irreparable damage if connected incorrectly.

The power cables and/or busbars must be secured mechanically outside the converter.

Power section Terminal type:

D400 / 60 -180 Mre converters	U1, V1, W1: Through-hole for M8 (3x20 copper bus) U2, V2, W2: Through-hole for M8 (5x20 copper bus)
D400 / 225 -360 Mre converters	U1, V1, W1: Through-hole for M10 (5x30 copper bus) U2, V2, W2: Through-hole for M10 (5x35 copper bus)
D400 / 525 -680 Mre converters	Through-hole for M12 (5x60 copper bus)
D400 / 900 Mre converters	U1, V1, W1: Through-hole for M12 (10x60 copper bus) U2, V2, W2: Through-hole for M12 (10x50 copper bus)
D500 / 360 Mre converters	Through-hole for M12 (5x60 copper bus)

The converters are designed for a permanent power supply connection according to DIN VDE 0160 Section 6.5.2.1.
PE conductor connection: Minimum cross-section 10mm^2. (see Section 5.1 for connection options).

The connection cross-sections must be determined according to the applicable regulations, e.g. DIN VDE 100 Part 523, DIN VDE 0276 Part 1000.

Note

Operation on an IT power supply system is possible without any modifications of the converter.

Function	Terminal	Connection values/Remarks
Supply input	U1 (L1) V1 (L2) W1 (L3)	see technical data in Section 3.4
PE conductor	⏚	
Motor connection	U2 (T1) V2 (T2) W2 (T3)	

Electronics power supply

Terminal type: Type 49 plug-in terminal
Maximum cross-section 1.5mm^2, finely stranded

Function	Connection	Terminal XP	Connection values/Remarks
Incoming supply 400V	1 2 NC 3	5U1 5W1 5N1	2AC 380V (-25%) to 460V (+15%); I_n=1A (– 35% for 1min) Internal fusing using F1, F2 on the C98043-A7020 / A7022 module external fuse protection 6A, characteristic C recommended
or			
Incoming supply 230V	1 2 3	5U1 5W1 5N1	1AC 190V (-25%) to 230V (+15%); I_n=2A (– 35% for 1min) Internal fusing using F1, F2 on the C98043-A7020 / A7022 module external fuse protection 6A, characteristic C recommended

NOTE

In the case of line voltages which exceed the tolerance range specified in Section 3.4, the electronics supply voltage and converter fan connection must be adjusted by means of transformers to the permissible value stated in Section 3.4. It is essential to use an isolating transformer for rated line voltages in excess of 460V.

The rated supply voltage for the power section is to be set in parameter P078 (index 001).

Fan

(for forced-cooled converters ≥ 225A)

Terminal type: DFK-PC4 plug-in terminal (screw-type)
Maximum connection cross-section 4mm^2 , finely stranded

The insulation on the supply cables must be taken up to the terminal housing.

Function	Terminal	Connection values/Remarks
Incoming supply	4U1 4V1 4W1	3AC 400V to 460V For further details, see technical data in Section 3.4
PE conductor	⏚	Fan can be switched via external contactor relay 3TH2031-0FB4 (Siemens), triggered by CUD1 module, terminals X171 / 46, 47



WARNING

The converter might overheat if the incorrect phase sequence is connected (incorrect direction of rotation of fan).
Check: Check that the fan is rotating in the direction of the arrow!

Caution: Rotating parts can cause physical injuries!

Open-loop and closed-loop control section

Terminal type:**X171 to X175** Plug-in terminal (screw-type)
Maximum connection cross-section 1.5mm2

XT, X1, X2_1 to X2_4 MSTB2.5 plug-in terminal
Maximum connection cross-section 2.5mm2

Analog inputs - setpoint inputs, reference voltage (see also Section 8, sheet G113)

Function		**Terminal X174**	**Connection values/Remarks**
Reference	M	1	
	P10	2	±1% at 25°C (stability 0.1% per 10°K); 10mA short-circuit-proof
	N10	3	
Select input	main setpoint +	4	Input type (signal type) parameterizable:
	main setpoint –	5	- Differential input ±10V; 150kΩ - Current input 0 - 20mA; 300Ω or 4 - 20mA; 300Ω
Select input	analog 1 +	6	
	analog 1 –	7	Resolution can be parameterized up to approx. 555µV (±14bit) Common mode suppression: ±15V

Analog inputs - actual speed inputs, tacho inputs (see also Section 8, sheet G113)

Function	**Terminal XT**	**Connection values/Remarks**
Tacho connection 8V to 270V	103	±270V; >143kΩ
Ground analog M	104	

Pulse encoder input (see also Section 8, Sheet G145)

Function		Terminal X173	Connection values/Remarks
Supply (+13,7V to+15,2V)		26	200mA; short-circuit-proof (electronic protection) Overload response: Fault message F018 Warning signal A018
Ground pulse encoder M		27	
Track 1	Positive terminal	28	Load: ≤5.25mA at 15V
	Negative terminal	29	(w/o switching losses, see below for cable, cable length, shield connection)
Track 2	Positive terminal	30	Switching hysteresis:See below
	Negative terminal	31	Pulse/pause ratio: 1:1
Zero marker	Positive terminal	32	Level of input pulses: See below
	Negative terminal	33	Track offset: Table 1 see below Pulse frequency: Table 2 see below Cable length: See below

Characteristic data of pulse encoder evaluation electronics

Level of input pulses:

Encoder signals (symmetrical and asymmetrical) up to a max. 27V differential voltage can be processed by the evaluated electronics.

Electronic adaptation of evaluation electronics to signal voltage of encoder:

– Rated input voltage range **5V** (P142=0):
  Low level: Differential voltage <0.8V
  High level: Differential voltage >2.0V
  Hysteresis: >0.2V
  Common-mode control range: ±10V

– Rated input voltage range **15V** (P142=1):
  Low level: Differential voltage <5.0V
  High level: Differential voltage >8.0V Restriction: See switching frequency
  Hysteresis: >1V
  Common-mode control range: ±10V

If the pulse encoder does not supply symmetrical encoder signals, then its ground must be routed as a twisted-pair lead with every signal cable and connected to the negative terminals of track 1, track 2 and the zero marker.

Switching frequency:

The maximum permitted frequency of the encoder pulses is 300kHz. To ensure correct evaluation of the encoder pulses, the minimum distance T_{min} between two encoder signal edges (tracks 1 and 2) specified in the table must be observed:

Table 1:

	Rated input voltage 15V 5V		Rated input voltage 15V 15V		
Differential voltage 1)	2V	>2,5V	8V	10V	>14V
T_{min} 2)	630ns	380ns	630ns	430ns	380ns

1) Differential voltage at terminals of evaluation electronics

2) The phase error L_G (deviating from 90°), which may occur as the result of encoder and cable, can be calculated from T_{min} :

$$L_G = \pm (90° - f_p * T_{min} * 360°)$$

L_G = phase error
f_p = pulse frequency
T_{min} = minimum distance between edges

This formula applies only if the encoder pulse ratio is 1:1.

If the pulse encoder is incorrectly matched to the encoder cable, disturbing cable reflections will be produced at the receive end. These reflections must be damped so that the encoder pulses can be correctly evaluated. The limit values listed in the table below must be maintained to ensure that the resultant power loss in the adapting element of the evaluation electronics is not exceeded.

Table 2:

f_{max}	50kHz	100kHz	150kHz	200kHz	300kHz
Differential voltage 3)	Up to 27V	Up to 22V	Up to 18V	Up to 16V	Up to 14V

3) Differential voltage of encoder pulses at no load
(approximate encoder power supply voltage)

Cable, cable length, shield connection:

The encoder cable capacitance must be recharged at each encoder edge change. The RMS value of this current is proportional to the cable length and the pulse frequency and must exceed the current specified by the encoder manufacturer. A suitable cable as recommended by the encoder manufacturer must be used. The maximum cable length must not be exceeded. Generally, a twisted cable pair with common pair shield is sufficient for each track. Crosstalk between the cables is thus reduced. The shielding of all pairs protects against noise pulses. The shield must be connected to the shield bar of the SIMOTRAS converter over the largest possible surface area.

Temperature sensor inputs (see also Section 8, Sheet G185)

Function	Terminal X174	Connection values/Remarks
Motor temperature Connection of temperature sensor	22 23	Sensor acc. to P490 index 1 The cable to the temperature sensor on the motor must be shielded and connected to ground at both ends.
Ground analog M	24	

Analog outputs (see also Section 8, Sheet G115)

Function	Terminal X175	Connection values/Remarks
Actual current Ground analog M	12 13	0. . .±10V corresponds to 0. . .±200% Converter rated current Max. load 2mA, short-circuit-proof
Select output analog 1 Ground analog M	14 15	0. . . ±10V, max. 2mA short-circuit proof
Select output analog 2 Ground analog M	16 17	Resolution ±11bit

Binary inputs (see also Section 8, Sheet G110)

Function	Terminal X171	Connection values/Remarks
Supply for binary inputs (output) Ground digital M	34 35	24V DC, short circuit proof max. load 200mA (terminals 34, 44, and 210 combined), internal supply with respect to internal ground Overload response: Error signal F018 Warning signal A018
Select input binary 1	36	H signal: +13V to +33V L signal: – 33V to +3V or terminal open 8.5mA at 24V
Power On / Shutdown 1 = power on 0 = shutdown	37	
Enable operation 1 = enable controller 0 = disable controller	38	
Select input binary 2	39	

Binary outputs (see also Section 8, Sheet G112)

Function	Terminal X171	Connection values/Remarks
Select output binary 1 Ground M	46 47	H signal: +20V to +26V L signal: 0 to +2V Short-circuit-proof 100mA Internal snubber circuit (free-wheeling diode) Overload response: Error signal F018 Warning signal A018
Select output binary 2 Ground M	48 54	

Serial interface 1 (G-SST1) RS232 (9-pin SUBMIN D connector)
X300
Use a shielded connecting cable! Ground shield at both ends!

Con. pin X300	Function
1	Housing earth
2	Receive cable to RS232 (V.24) standard
3	Send and receive cables to RS485, two-wire, positive differential input/output
4	Input: Reserved for later use
5	Ground
6	5 V voltage supply for OP1S
7	Send cable to RS232 (V.24) standard
8	Send and receive cables to RS485, two-wire, positive differential input/output
9	Ground

Cable length: Up to 15m according to EIA Standard RS232C
Up to 30 m capacitive load, max. 2.5nF (cable and receiver)

A serial connection to a PLC or PC can be made using connector X300 on the PMU, allowing the converter to be controlled and operated from a central control centre or room.

Serial interface 2 (G-SST2) RS485

Function	Terminal X172	Connection values/Remarks
TX+	56	RS485, 4-wire send cable, positive differential input
TX-	57	RS485, 4-wire send cable, negative differential input
RX+/TX+	58	RS485, 4-wire receive cable, positive differential input, 2-wire send/receive cable, positive differential input
RX-/TX-	59	RS485, 4-wire receive cable, negative differential input, 2-wire send/receive cable, negative differential input
M	60	Ground

Cable length: For transmission rate =187.5kBd ⇒ 600m
For transmission rate =93.75kBd ⇒ 1200m

The following must be observed: DIN 19245 Part 1
The potential difference between the data reference potentials M of all interfaces must not exceed -7V / +12V. If this cannot be guaranteed, then equipotential bonding must be provided

Activation of interface 1 or 2:

– Set the baud rate in parameter P783 or P793.
– Set the protocol in parameter P780 or P790..

Control inputs (see also Section 6.1 and Section 8, Sheets G117 and G118)

Function	Terminal X1	LED	Connection values/Remarks
LS - Control voltage connection Common connection for control inputs	71		230V AC / 8 mA
Control input In the factory setting, the parameter is wired as the input for "Travel command 1" – FK1 for crane control	72	H72	230V AC / 8 mA
Control input In the factory setting, the parameter is wired as the input for "Travel command 2" – FK2 for crane control	73	H73	230V AC / 8 mA
Control input In the factory setting, the parameter is wired as the input for Notch)	74	H74	230V AC / 8 mA
Control input In the factory setting, the parameter is wired as the input for "Pre-limit switch 1" – VE1	75	H75	230V AC / 8 mA
Control input In the factory setting, the parameter is wired as the input for "Pre-limit switch 2" – VE2	76	H76	230V AC / 8 mA
Control input In the factory setting, the parameter is wired as the input for "Limit switch 1" – LS1	77	H77	230V AC / 8 mA
Control input In the factory setting, the parameter is wired as the input for "Limit switch 2" – LS2	78	H78	230V AC / 8 mA
Control input In the factory setting, the parameter is wired as the input for the Acknowledge key)	79	H79	230V AC / 8 mA

Control outputs (electrically isolated relay outputs) (see also Section 8, Sheets G112 and G119)

Function	Terminal X2_4	LED	Connection values/Remarks
Control output In the factory setting, the parameter is wired as the output "No fault"	109 110	H109	Load capability: =250V AC, 4A; cosΦ=1 =250V AC, 2A; cosΦ=0,4 =30V DC, 2A
Control output In the factory setting, the parameter is wired as the output "No fault"	81 82	H81	

Function	Terminal X2_3	LED	Connection values/Remarks
Control output In the factory setting, the parameter is wired as the output "Acknowledgement"	83 84	H83	Load capability: =250V AC, 4A; cosΦ=1 =250V AC, 2A; cosΦ=0,4 =30V DC, 2A
Control output In the factory setting, the parameter is wired as the output "Brake contactor"	85 86	H85	

Function	Terminal X2_2	LED	Connection values/Remarks
S1 - "Rotor contactor stage 1" Relay signal "Switch rotor contactor S1"	87 88	H87	Load capability: =250V AC, 4A; cosΦ=1 =250V AC, 2A; cosΦ=0,4 =30V DC, 2A
S2 - "Rotor contactor stage 2" Relay signal "Switch rotor contactor S2"	89 90	H89	

Function	Terminal X2_1	LED	Connection values/Remarks
S3 - "Rotor contactor stage 3" Relay signal "Switch rotor contactor S3"	91 92	H91	Load capability: =250V AC, 4A; cosΦ=1 =250V AC, 2A; cosΦ=0,4 =30V DC, 2A
S4 - "Rotor contactor stage 4" Relay signal "Switch rotor contactor S4"	93 94	H93	

Options:

Terminal expansion (C98043-A7006)

Terminal type: Plug-in terminal (screw-type)
Max. connection cross-section 1.5mm2

Binary inputs, fault and alarm messages (see also Section 8, Sheet G186)

Function	**Terminal X161**	**Connection values/Remarks**
Supply for binary inputs (output)	210	24V DC, short circuit proof with respect to internal ground max. load 200mA (terminals 34, 44, and 210 combined), Overload response: Error signal F018 Warning signal A018
Binary input Binary input Binary input Binary input	211 212 213 214	H signal: +13V to +33V L signal: – 33V to +3V or terminal open Input resistance = 2.8 kΩ
Ground for binary inputs Ground for binary inputs M	215 216 217	can be isolated from internal ground (open wire jumper between terminals 216 and 217)

Binary inputs (see also Section 8, Sheet G111)

Function	**Terminal X163**	**Connection values/Remarks**
Supply for binary inputs (output)	44	24V DC, short circuit proof max. load 200mA (terminals 34, 44, and 210 combined), internal supply with respect to internal ground
Ground digital M	45	Overload response: Error signal F018 Warning signal A018
Select input binary 2	40	H signal: +13V to +33V L signal: – 33V to +3V or terminal open 8.5mA at 24V
Select input binary 3	41	
Select input binary 4	42	
Select input binary 5	43	

Binary outputs (see also Section 8, Sheet G112)

Function	**Terminal X163**	**Connection values/Remarks**
Select output binary 3	50	H signal:+20V to +26V L signal:0 to +2V Short-circuit-proof 100mA Overload response: Error signal F018 Warning signal A018 Internal snubber circuit (free-wheeling diode)
Ground M	51	
Select output binary 4	52	
Ground M	53	

Analog inputs (see also Section 8, Sheet G114)

Function	Terminal X164	Connection values/Remarks
Select input analog 2	8	±10V, 52kΩ
Ground analog	9	Resolution: ±10bit
Select input analog 3	10	Common mode suppression: ±15V
Ground analog	11	

Analog outputs, temperature sensor input (see also Section 8, Sheets G116 and G185)

Function	Terminal X164	Connection values/Remarks
Select output analog 3	18	0. . . ±10V, max. 2mA
Ground analog M	19	short-circuit proof
Select output analog 4	20	Resolution ±11bit
Ground analog M	21	
Temperature sensor input	204	Sensor acc. to P490 Index 2
	205	The cable to the temperature sensor on the motor must be shielded and connected to ground at both ends.

Serial interface 3 (G-SST3) RS485

Function	Terminal X162	Connection values/Remarks
TX+	61	RS485, 4-wire send cable, positive differential input
TX-	62	RS485, 4-wire send cable, negative differential input
RX+/TX+	63	RS485, 4-wire receive cable, positive differential input, 2-wire send/receive cable, positive differential input
RX-/TX-	64	RS485, 4-wire receive cable, negative differential input, 2-wire send/receive cable, negative differential input
M	65	Ground

Cable length: For transmission rate =187.5kBd ⇒ 600m
For transmission rate =93.75kBd ⇒ 1200m

The following must be observed: DIN 19245 Part 1
The potential difference between the data reference potentials M of all interfaces must not exceed -7V / +12V. If this cannot be guaranteed, then equipotential bonding must be provided.

Activate interface 3:
– Set the baud rate in parameter P803.
– Set the protocol in parameter P800.

7 Start-up

7.1 General safety information for start-up



DANGER

Before commencing with start-up on the converters, make sure that the transparent terminal cover is mounted in the correct position (see Section 5.1).

CAUTION

Before handling any boards (in particular, the A7001 electronics board), please make sure that your body is electrostatically discharged to protect electronic components against high voltages caused by electrostatic charges. The simplest way of doing this is to touch a conductive, grounded object (e.g. bare metal cabinet component immediately beforehand).

PCBs must not be allowed to come into contact with highly insulating materials (e.g. plastic foil, insulating table tops or clothing made of synthetic fibres).

PCBs may only be set down on electrically conducting surfaces.

WARNING

Hazardous voltages and rotating parts (fans) are present in this electrical equipment during operation. Non-observance of the safety instructions can result in death, severe personal injury or substantial property damage.

A hazardous voltage may be present at the signalling relays in the customer installation.

The converters must not be connected to a supply with earth-leakage circuit-breaker (VDE 0160, Section 6.5) since, in the event of a fault to frame or ground, the fault current may contain a DC component that will either prevent or hinder a higher-level e.l.c.b. from tripping. In this case, all loads connected to this e.l.c.b. have no protection either.

Only qualified personnel who are thoroughly familiar with all safety notices contained in the operating instructions as well as erection, installation, operating and maintenance instructions should be allowed to work on these devices.

The successful and safe operation of this equipment is dependent on careful transportation, proper storage and installation as well as correct operation and maintenance.

The converter is at a hazardous voltage level even when the power section is disconnected from the power supply. The gating board (board mounted directly to lower part of housing) has many circuits at hazardous voltage levels. Before carrying out any maintenance or repair work, all converter power sources must be disconnected and locked out.

These instructions do not claim to list all of the measures required to ensure safe and reliable operation of the converter. For special applications, additional, supplementary information or instructions might be required. If problems do occur and you feel in any way uncertain, please contact your local Siemens office or representative.

The use of unauthorized parts in the repair of this converter and handling of the equipment by unqualified personnel can give rise to hazardous conditions which may cause death, severe personal injury or substantial property damage. All safety notices contained in this instruction manual and attached to the converter itself must be carefully observed.

Please read the safety information given in Section 1 of this instruction manual.

7.2 Operator control panels

The basic converter is equipped with a simple operator panel (PMU) as standard. A user-friendly panel with plaintext display (OP1S) can be connected as an option.

7.2.1 Simple operator control panel (PMU "Parameterization Unit")

The simple operator control panel is mounted in the converter door and consists of a 5-digit, 7-segment display with three status display LEDs and three parameterization keys below.

All adjustments and settings that need to be undertaken for the purpose of start-up can be made on the simple control panel.

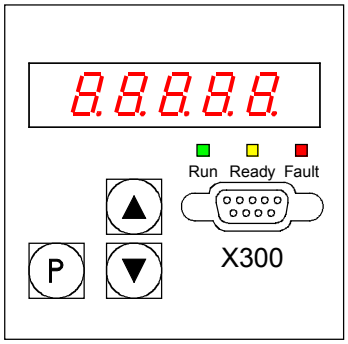

- **P**-key
  - Switches over between parameter number (parameter mode), parameter value (value mode) and index number (index mode) on indexed parameters.
  - Acknowledges active fault messages.
  - P and UP keys to switch a fault message and alarm to the background (see Section 10, Fault Messages and Alarms)
  - P and DOWN key to switch a fault message and alarm from the background back to the foreground display on the PMU (see Section 10, Fault Messages and Alarms)

- **UP** key (▲)
  - Selects a higher parameter number in parameter mode. When the highest number is displayed, the key can be pressed again to return to the other end of the number range (i.e. the highest number is thus adjacent to the lowest number).
  - Increases the selected and displayed parameter value in value mode.
  - Increases the index in index mode (for indexed parameters)
  - Accelerates an adjustment process activated with the DOWN key (if both keys are pressed at the same time).

- **DOWN** key (▼)
  - Selects a lower parameter number in parameter mode. When the lowest number is displayed, the key can be pressed again to return to the other end of the number range (i.e. the lowest number is thus adjacent to the highest number).
  - Decreases the selected and displayed parameter value in value mode.
  - Decreases the index in index mode (for indexed parameters)
  - Accelerates an adjustment process activated with the UP key (if both keys are pressed at the same time).

LED displays

Run green LED
LED illuminated ⇒ in “Torque direction active” state (MI, MII, M0).
(see r000 in Section 11)

Ready yellow LED
LED illuminated ⇒ in “Ready” state (o1 .. o7).
(see r000 in Section 11)

Fault red LED
LED illuminated ⇒ in “Fault signal present” state (o11)
(see r000 in Section 11 and Faults and Alarms (Section 10))
LED flashing ⇒ An alarm is active (see Faults and Alarms in Section 10).

7.2.2 User-friendly operator control panel (OP1S)

The optional, user-friendly, operator control panel with plaintext display (order no.: 6SE7090-0XX84-2FK0) is mounted in the special location provided in the converter door.

This location provides a connection to the serial basic converter interface SST1.

Parameters can be selected directly through input of the parameter number via the keyboard of the OP1S. The following interrelationships apply:

	Displayed number	Number to be keyed in on OP1S
Basic converter parameter	**r**xxx, **P**xxx	(0)xxx
	Uxxx, **n**xxx	**2**xxx
Technology board parameter	**H**xxx, **d**xxx	**1**xxx
	Lxxx, **c**xxx	**3**xxx

If the UP or DOWN key on the OP1S is used to select adjacent parameter numbers, then any missing numbers in the range of basic converter parameters are skipped.

This automatic skipping over missing numbers does not work for technology board parameters. In this case, the numbers of existing parameters must be entered directly.

The OP1S switches to **Operating display** a few seconds after initialization.

By pressing the <P> key, you can switch from the operating display to the **Basic menu** in which you can either select "Free access" to all parameters or a variety of functions. Details of these functions can be found in the function diagram "OP1S operating display" (Section 8, Sheet Z123) and the OP1S operating instructions.

The converter parameters can be set in "**Free access**" status.

You can return to the operating status display by pressing the <R> key (several times if necessary).

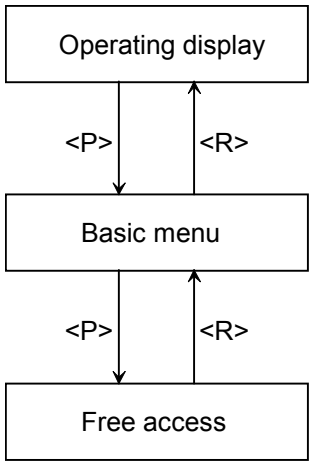

The following values are displayed in the operating display of the SIMOTRAS 6SG70.

1st line		Actual motor current value r019	0	Bus addr.
2nd line	#	Actual speed controller value r025		
3rd line	*	Speed setpoint r028		
4th line		Operating state r059		

Control bits from OP1S operator panel:

(see also function diagram "OP1S operating display" (Section 8, Sheet Z123) and the OP1S operating instructions)

Data are exchanged between the OP1S and SIMOTRAS 6SG70 converter via the G-SST1 interface (RS485) and USS protocol.

The OP1S operator panel transfers the following control bits in process data word 1 in the USS message:

Key on OP1S	Function	Bit in PZD word1 (connector K2001)	Binector *)
ON key / OFF key (I / 0)	ON / OFF1	Bit 0	B2100
Reset	Acknowledge	Bit 7	B2107
Jog	Inching	Bit 8	B2108
Reverse	Enable positive direction of rotation	Bit 11	B2111
	Enable negative direction of rotation	Bit 12	B2112
Increase key	Increase motorized potentiometer	Bit 13	B2113
Decrease key	Decrease motorized potentiometer	Bit 14	B2114

*) These binectors (control bits) are available for all control tasks (when parameterized accordingly), but are not normally used with SIMOTRAS 6SG70 converters.

7.3 Parameterization procedure

Parameterization is the process of changing setting values (parameters) via the operator panel, activating converter functions or displaying measured values.

Parameters for the basic converter are called P, r, U or n parameters. Parameters for an optional supplementary board are called H, d, L or c parameters.

The basic unit parameters are displayed first on the PMU, followed by the technology board parameters (if such a board is installed). It is important not to confuse the parameters of the S00 technology software of the basic unit with the parameters of an optional supplementary board (e.g. T300).

Depending on how parameter P052 is set, only some parameter numbers (see Section 11, Parameter List) are displayed.

7.3.1 Parameter types

Display parameters are used to display current quantities such as the main setpoint, setpoint/actual value difference of speed controller, etc. The values of display parameters are read-only values and cannot be changed.

Setting parameters are used to both display and change quantities such as the rated motor current, thermal motor time constant, speed controller P gain, etc.

Indexed parameters are used to both display and change several parameter values which are all assigned to the same parameter number.

7.3.2 Parameterization at the simple operator control panel

After the electronics supply voltage has been switched on, the PMU is either in the operating display state and indicating the current operating status of the SIMOTRAS 6SG70 (e.g. o7.0), or in the fault/alarm display state and indicating a fault or alarm (e.g. F021).

Operational states are described under parameter r000 in Section 11 and the fault and alarm messages in Section 10.

1. To reach the parameter number level from the operating display state (e.g. o7.0), press the P key and then the <Up> or <Down> key to select individual parameter numbers
2. To reach the parameter index level (for indexed parameters) from the parameter number level, press P and then the <Up> or <Down> key to select individual indices. If you press P when a non-indexed parameter is displayed, you go directly to the parameter value level.
3. To reach the parameter value level from the parameter index level (for indexed parameters), press P.
4. On the parameter value level, you can change the setting of a parameter value by pressing the <Up> or <Down> key.

NOTE

Parameters can be altered only if the following conditions are fulfilled:

- The appropriate access authorization is set in key parameter P051, e.g. “40” (see Section 11, “Parameter List”).
- The converter is the correct operational state. Parameters with characteristic “offline” cannot be changed when the converter is in the “Run” (online) state. To change parameters with this characteristic, switch the converter to the ≥o1.0 status (“Ready”).
- The values of display parameters can never be changed (read only).

5. Manual shifting
   If the 5 existing digits on the 7-segment display are not sufficient to display a parameter value, the display first shows just 5 digits (see Fig. 7.1). To indicate that digits are concealed to the right or left of this “window”, the right-hand or left-hand digit flashes. By pressing the <P>+<Down> or <P>+<Up> key, you can shift the window over the remaining digits of the parameter value.
   As an orientation guide, the position of the right-hand digit within the overall parameter value is displayed briefly during manual shifting.

Example: Parameter value “208.173“
"208.17" is displayed when the parameter is selected. After pressing P and the DOWN key, 1 is displayed briefly followed by “08,173”. The rightmost digit 3 is the 1st digit of the parameter value.
After pressing P and the UP key, 2 is displayed briefly followed by “208,17”. The rightmost digit 7 is the 2nd digit of the parameter value.

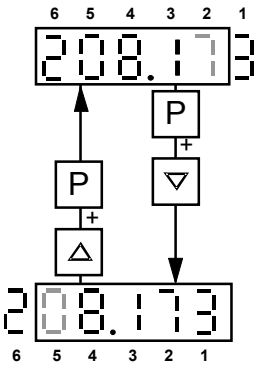

Fig. 7.1 Shifting the PMU display for parameter values with more than 4 digits

6. Press the P key to return to the parameter number level from the parameter value level.

Tables 7.1 and 7.2 below show an overview of displays which may appear on the PMU:

		Parameter number e. g.	Index e. g.	Parameter value e. g.
Display parameters	**Basic unit**	r000 or n000	001	0 7.0
	Technology	d000 or c000		
Setting parameters	**Basic unit**	P051 or U051	001	-2.08
	Technology	H002 or L002		

Table 7.1 Display of visualization and setting parameters on the PMU

	Actual value	Parameter value not (currently) possible	Alarm	Fault
Display	-2.08	- - - - _ _ _ _	A022	F006

Table 7.2 Status displays on the PMU

NOTE

Parameters are described in the Parameter List in Section 11 and faults and alarms in Section 10.

7.4 Restore factory setting

Restore parameter value to default (factory) setting.

The “Restore to default” function can be executed if a defined basic setting is to be established, e.g. in order to carry out a complete new start-up operation.

NOTICE

When the “Restore to default” function is activated, all parameters set for a specific installation are overwritten (deleted). We therefore recommend that all old settings be read out beforehand with **DriveMonitor** and stored on a PC or programmer.

“Restore to default” must be followed by a completely new start-up operation or else the converter will not be “ready” with respect to safety.

Execution of function:

1. Set parameter **P051 = 21**
2. Transfer parameter values to the non-volatile memory.
   The parameter values are stored in non-volatile storage (EEPROM) so that they will still be available when the converter is switched off. This operation takes at least 5 s (but may also last several minutes). The number of the parameter currently being processed is displayed on the PMU during the process. The electronics power supply must remain connected while this operation is in progress.

7.5 Notes to be read before switching on



DANGER

Make sure that no persons, machines or other objects are endangered when the drive unit is started up! This should also cover the possibility of a malfunction.

Malfunctions or faults may occur as the result of connections becoming loose over time due to the vibration of machines or the switching of power contactors. You should therefore check the connections in your cubicle.

Frequent causes of malfunctions and faults are incorrect settings or carelessness during the start-up procedure. It is often only a minor factor that causes a malfunction.

The following tasks should be completed before starting the converter for the first time:

1. The SIMOTRAS HD must be disconnected from the power supply on all poles.
2. Check the connections, the protective measures and the converter earth.
3. Check the supply voltage in the power section (max. 500 V AC).
4. Check the control voltage (max. 250 V AC).
5. Connect and set the motor protection element (motor protection switches, motor protection relays), if PTC connected – check thermistor detector.
6. Check supply voltage to the three phase asynchronous motor (star or delta connection).
7. Check converter connector is securely connected.
8. Check the motor shaft moves freely with the brake released.
9. Rotation of the motor in either direction must not cause any damage.
10. Ensure that no persons are within the drive operating area.

7.6 Start-up procedure



WARNING

The converter is at a hazardous voltage level even when the line contactor is open. The gating board (board mounted directly to lower part of housing) has many circuits at hazardous voltage levels.

Non-observance of the safety instructions given in this manual can result in death, severe personal injury or substantial property damage.

NOTE

The start-up procedure described below applies in situations where the SIMOTRAS HD converter is connected to the system in accordance with the suggested connection plan. If this is not the case, additional or other measures may be required in certain instances.

7.6.1 Access authorization

P051 . . . Key parameter
- 0 Parameter cannot be changed
- 40 Parameter can be changed

P052 . . . Selection of parameters to be displayed
- 0 Only parameters that are not set to default are visible
- 3 All parameters are visible

P927 . . . Enter an odd number if parameters are to be entered via CB (PROFIBUS)

7.6.2 Adjustment of converter rated currents

The **rated converter current** must be adjusted by the setting in parameter P076.001 (in %) if:

$$\frac{\text{max. motor current}}{\text{rated converter current}} < 0{,}5$$

7.6.3 Adjustment to actual converter supply voltage

P078.001 Rated RMS value of actual voltage applied in SIMOTRAS HD (in Volts)

7.6.4 Input of motor data

The motor data as given on the motor rating plate must be entered in parameters P100 and P114.

P100 Rated motor current (in amps)

P114 Thermal time constant of motor (in minutes)

P490.001 Temperature sensor on terminals 22/23 for monitoring the motor temperature
- 0 No temperature sensor
- 1 KTY84
- 2 PTC thermistor with R_n=600Ω 1)
- 3 PTC thermistor with R_n=1200Ω 1)
- 4 PTC thermistor with R_n=1330Ω 1)
- 5 PTC thermistor with R_n=2660Ω 1)

1) PTC thermistor according to DIN 44081 / 44082 with specified R at rated response temperature. When a PTC thermistor is selected as the temperature sensor, it is not necessary to set parameters P491 and P492 (alarm and trip temperatures). These two temperatures are predetermined by the type of PTC thermistor installed. Whether an alarm or fault is output when the operating point of the PTC thermistor is reached depends on how the relevant input is parameterized (P493.F or P494.F).

P491 Alarm temperature (factory setting = 20°C)

7.6.5 Actual speed sensing data

7.6.5.1 Operation with pulse encoder

(often present when retrofitting existing systems)

P083 = 2: The actual speed is supplied by the pulse encoder (K0040)

P140 = 1. Pulse encoder type 1
Encoder with two pulse tracks mutually displaced by 90°

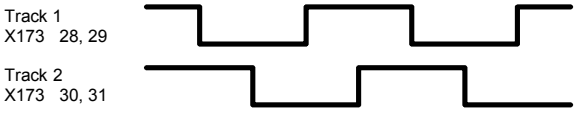

P141 Number of pulses of pulse encoder (pulses per revolution)

P142 = 1: Pulse encoder outputs 15V signals

NOTICE

Resetting parameter P142 to the alternative setting does not switch over the supply voltage for the pulse encoder (terminals X173.26 and 27).
Terminal X173.26 always supplies +15V. An external voltage supply must be provided for pulse encoders requiring a 5V supply.

P143 Setting the maximum speed for pulse encoder operation (in pulses/rev)
The speed set in this parameter corresponds to an actual speed (K0040) of 100%.

7.6.5.2 Operation with analog tacho

(used in new systems)

P083 = 1: The actual speed is supplied from the “Main actual value” channel (K0013)
(terminals XT.103, XT.104)

P741 Setting of tachometer voltage at maximum speed (approx. 8V to +270.00V)

7.6.6 Speed setpoint data

7.6.6.1 Operation with analog setpoint (U251=0)

P700 = 0: Voltage input (+-10V)
1: Current input (0 to 20 mA)
2: Current input (4 to 20 mA)

P401 Normalization
speed setpoint that must be attained under control by master switch (in %).
with lifting gear:approx. 60%
with travel gear:up to 100%
Note: Limit value for zero-delay angle (U628), see also Section 7.6.14

7.6.6.2 Operation with 4 stage master switch (U251=1)

U251=1: Use setpoint of 4-stage master switch

U665	speed setpoint in “slow” stage	factory setting 10%
U666	speed setpoint in “medium” stage	factory setting 25%
U667	speed setpoint in “fast” stage	factory setting 40%
U668	speed setpoint in “full” stage	factory setting 100%

7.6.7 Selection of basic technological functions

Current limits

P171 System current limit in torque direction I (in% of P100)

P172 System current limit in torque direction II (in% of P100)

7.6.8 Setting the current controller loop

Formula:
The factory setting for the current controller parameter can normally be left as it is:

P155 = Kp = 0.2 P156 = Tn = 20 ms

Optimizing the current controller:

With the motor fully braked, enter the current setpoint increments and record the step response from the current controller loop.

Rotor stage S1 is active

- Fully brake the motor and interrupt the supply voltage to the brake contactor.
- P084 = 2 (current-controlled operation)
  current setpoint from square wave generator (P500 = 203, factory setting)
- Parameterize square wave generator:
  P480 =20,0 % (step level 1)
  P481 =1.0 s (duration of step)
  P482 =10.0 % (step level 2)
  P483 =1.0 s (duration of step)
- Enter first setpoint stage from master switch (i.e. a travel command).
- Trace the stator current on the actual current value output (X175 terminals 12 and 13, 5V is the rated current for the SIMOTRAS HD) using an oscilloscope. The oscillogram will display the step response of the current controller loop.

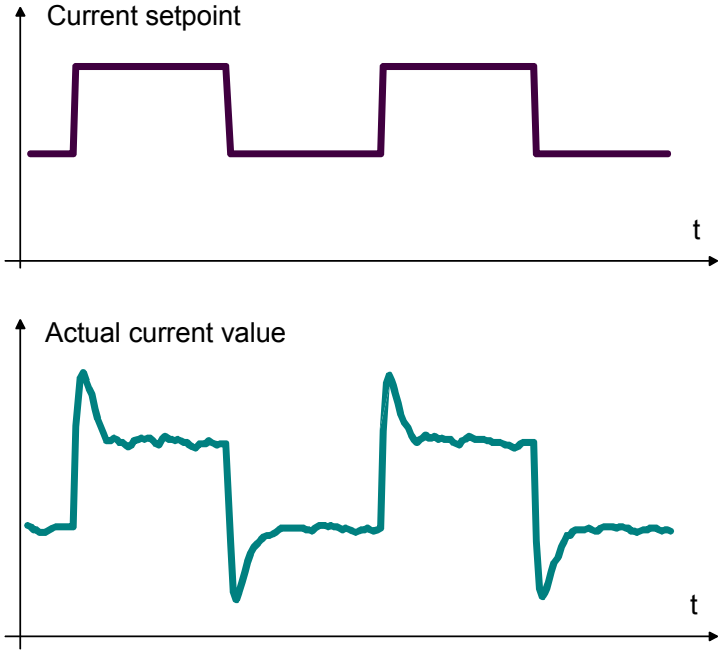

- The following settings affect the current controller loop:

  P155 Controller gain Kp

  P156 Reset time Tn
  The control response becomes “softer” if a longer reset time is set.
- Move master switch to zero position (i.e. cancel travel command).
- Following current controller optimization:
  P084 = 1 (reset to operation under closed-loop speed control)
- Reconnect power supply to brake contactor.

7.6.9 Checking direction of rotation of the motor

- Enter first setpoint stage from master switch (i.e. a travel command).
- If the drive accelerates or is running at maximum speed:
  Reverse the phase sequence of the motor output or the polarity of the tachometer connection.
- For lifting gear:
  positive setpoint = mechanical "Lift" direction of rotation
  negative setpoint = mechanical "Lower" direction of rotation
  For travel gear:
  positive setpoint = forwards / right,
  negative setpoint = backwards / left
  If this is not the case, reverse the phase sequence of the motor output and the polarity of the tachometer connection
- Set speed setpoint to medium speed, e. g. nset = +5V = +50% (lift)
- Check the actual lifting speed using parameter r025 (display +50%).

7.6.10 Setting the speed control loop

Formula:
The following settings will normally produce a stable control response:

P225 Controller gain Kp = 3 to 10
P226 Reset time Tn = 0.150 to 0.500 s

Optimizing the speed control loop:

Enter the speed setpoint steps without a ramp-function generator and record the step response for the speed control loop.

- Parameterize square wave generator:
  P480 = 5.0 % (step level 1)
  P481 = 2.0 s (duration of step)
  P482 = 0.0 % (step level 2)
  P483 = 2.0 s (duration of step)
  P625 = 203 (use square wave generator instead of the setpoint from the master switch)

Rotor stage S1 is active

- Enter first setpoint stage from master switch (i.e. a travel command).
- Trace the actual speed value (X175 terminals 14 and 15) on an oscilloscope. The oscillogram will display the step response of the speed control loop.

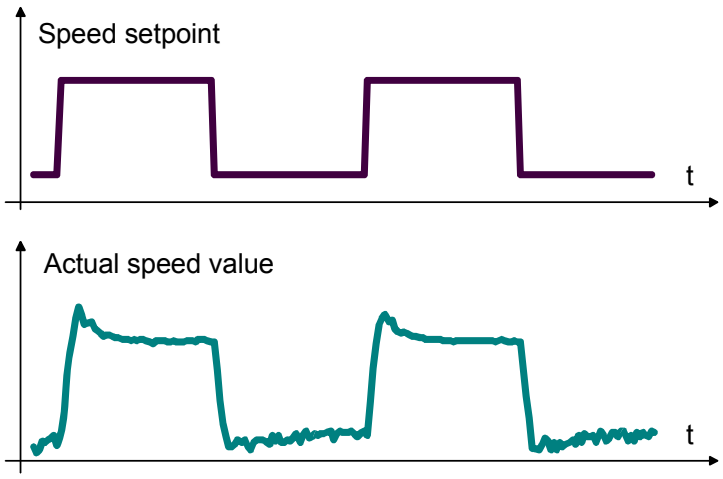

Fig. 7.6.10.1 Step response of speed control loop without ramp-function generator, ideal shape

- The following settings affect the speed control loop:

  P225: Controller gain Kp
  Setting too low a gain results in an inaccurate speed correction to the setpoint (remaining control deviation)
  Setting too high a gain may result in speed instability. The drive will tend to vibrate. Increase the gain using P225 until the first signs of instability occur, then slightly reduce the value of P225.

  P226: Reset time Tn
  The control response becomes “sharper” by shortening the reset time.

  P200: Smoothing of actual speed value (tachometer voltage) factory setting: 10 ms.
  Excessive smoothing can produce instability in the speed control loop.

- After optimizing the speed controller, reset to master switch setpoint P625=170
- Other:

  P158: Smoothing of current setpoint (speed controller output)
  P157 = 0: Smoothing (P158) only active following torque direction reversal
  P157 = 1 Smoothing (P158) always active

  P227: Droop
  The speed controller is not inflexible, i.e. it does permit small deviations to the setpoint as the load increases.
  At a load level that produces the rated converter current, a control deviation according to the percentage set in P227 will be permitted

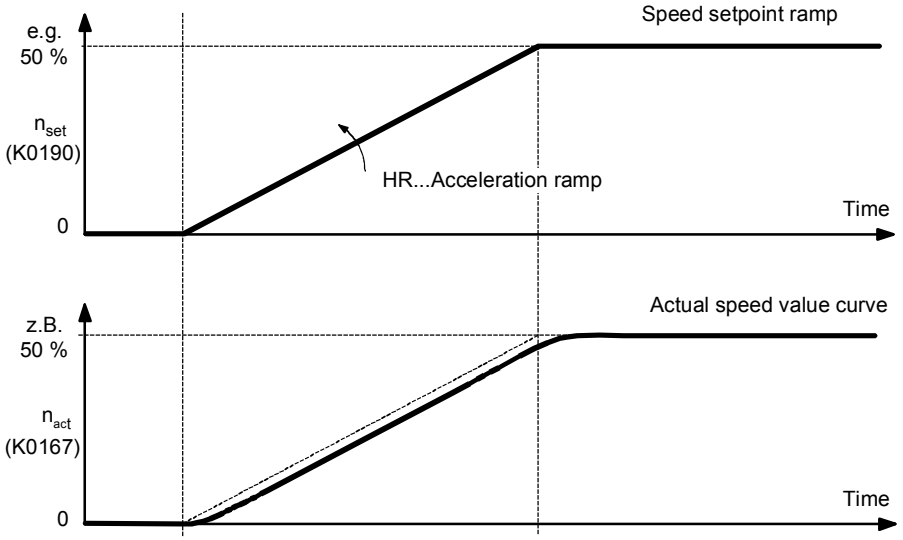

Fig. 7.6.10.2 Step response of speed control loop with ramp-function generator

7.6.11 Setting the ramp times of the ramp-function generator

- Increase the speed setpoint in stages.
- Set the ramps for the ramp-function generator to provide optimum drive acceleration.
  Set the transition roundings for the ramp-function generator such that there are no jerking motions when reaching or leaving the setpoint.

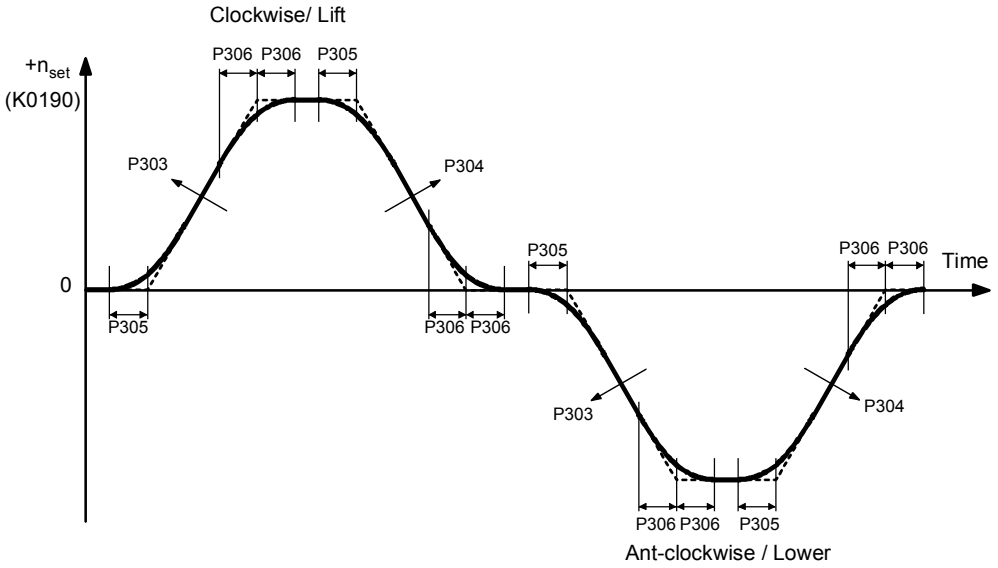

Fig. 7.6.11.1 Setting the ramp times of the ramp-function generator

Ramp times in closed-loop control range	Ramp times in open-loop control range
P303: Ramp-up time	P307: Ramp-up time
P304: Ramp-down time	P308: Ramp-down time
P305: Lower transition rounding	P309: Lower transition rounding
P306: Upper transition rounding	P310: Upper transition rounding

7.6.12 Setting the brake control

The following actions take place after **specifying a travel command**:

1. The firing pulse and the controller are enabled
2. The “Release brake” signal is output
3. The ramp-function generator starts to ramp up

- P087 (with a negative value) can be used to delay the “Release brake” signal in relation to the enabling of the firing pulse and the controller until the motor has definitely been excited and torque has developed.
- Parameter P319 can be used to delay the ramping up of the ramp-function generator in relation to the enabling of the firing pulse and the controller using until the brake has definitely been released (no start-up with brake still closed).

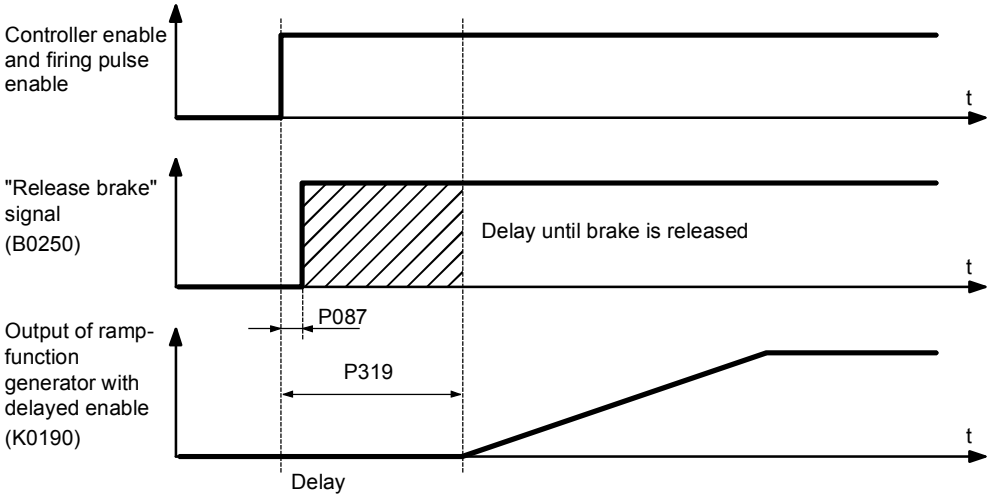

Fig. 7.6.12.1 Time characteristic following input of travel command

Setting information:

- Set the delay time using parameter P319 so that the setpoint is not enabled via the ramp-function generator until the brake has actually been released.

Caution: If the value of P319 is too low, the drive will run against the brake for a while!
If the value of P319 is too high, there will be an unnecessarily long delay after the master switch is activated!

The following actions take place after **cancelling a travel command**:

1. The ramp-function generator input is set internally to 0, i.e. the ramp-function generator begins to ramp down.
2. If the actual speed falls below the value n_min (P370), the “Release brake” signal is cancelled.
3. The firing pulse and the controller are disabled using the delay time P088 (e.g. until the brake has definitely been closed)

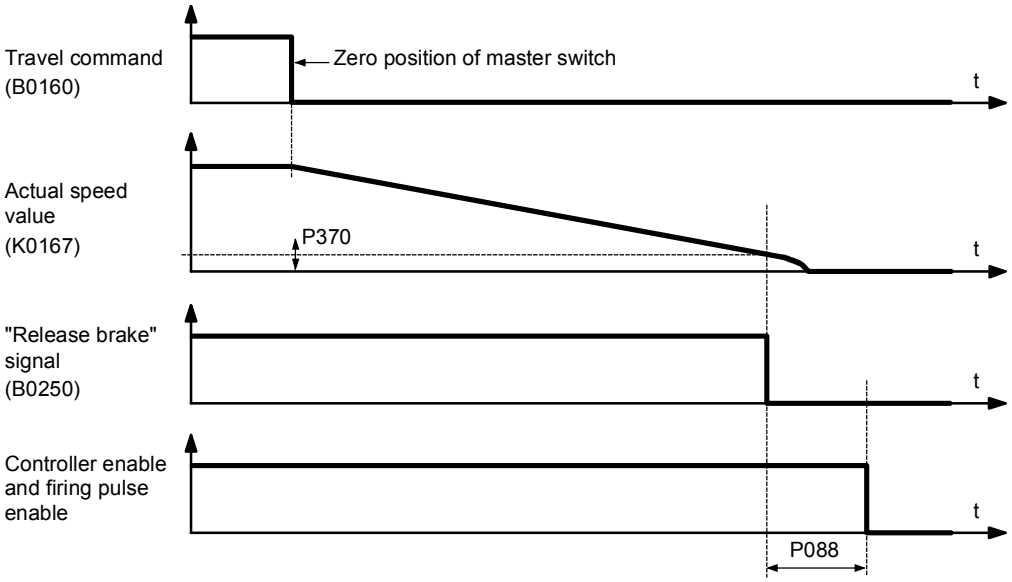

Fig. 7.6.12.2 Time characteristic following cancellation of travel command

Setting information:

- Use parameter P370 to set the minimum speed at which the brake should be closed (factory setting 5%).
- Use parameter P088 to set the delay time so that the firing pulses are only disabled after the brake has actually been closed (delayed controller shut-off).

Caution: If the value of P088 is too low, there may be a load slump because the load can no longer be held electrically and the mechanical brake has not yet closed completely. This results in a brief slump in the load in the case of suspended loads!

7.6.13 Setting the start pulse for the speed controller

Lifting gear:

In the case of lifting gear, the I component of the speed controller command cannot start from a value of zero when “Release brake” is entered, but from a fixed setting value that is selected to prevent the slumping of a suspended load when the brake is released. The basis for this can be either a constant load or the result of an existing load measurement can be fed into the SIMOTRAS HD converter using an analog input. In addition, the start pulse for the lowering operation can be reduced using U652.

Constant start pulse	**Load measurement /variable start pulse**
Lifting: U651: Setting value for I component of speed controller	Lifting: U655: Selection of connector via which an existing load measurement is to be fed into the SIMOTRAS HD converter
Lowering: U652: Reduction factor for the setting value used in lifting for the I component of the speed controller	

Overhead travel gear:

For overhead travel gear in the open air which is subjected to strong winds, it may on occasion be prudent not to let the I component of the speed controller start at zero when "Release brake" is entered, but at a setting value. Setting the I component also acts as the breakaway torque.

Clockwise:	Anti-clockwise:
U651: Setting value for I component of speed controller for clockwise rotation (factory setting 0%)	U656 = 453: Use setting value in U653 U653: Setting value for I component of speed controller for anti-clockwise rotation (U653=value in U651)

7.6.14 Setting of limit value for closed-loop/open-loop operation

- Determine switchover threshold for closed-loop and open-loop operation according to control characteristics (Section 3.3.6 and 3.3.7) and enter as values in parameters U628 (value) and U629 (hysteresis)
  for lifting gear: U628 = 60%
  for travel gear: U628 = up to 95%
- With the master switch fully open and speed U628 is reached, the SIMOTRAS HD receives the “Zero delay angle” command.
  The SIMOTRAS HD then outputs the full output voltage if outside the setpoint reduction range.
- Setpoint and actual value monitoring (F031) is not active in open-loop operation.
  Overspeed monitoring (F038) is always active.

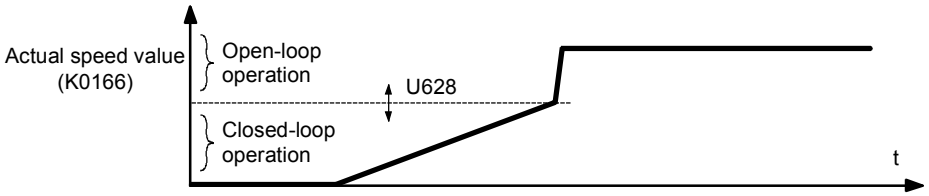

Fig. 7.6.14.1Time characteristic when switching over to open-loop operation

7.6.15 Setting the rotor contactor stepping

Specifying limit values for switching over the rotor contactors (see Section 3.3.6 and 3.3.7):

On every control characteristic curve (in other words at a particular rotor resistance), the maximum possible torque reduces as the speed increases. As a result, the converter switches to the next rotor stage at the speed where the maximum possible torque is just 100% in order to receive an appropriate acceleration torque (switchover points S2, S3 and S4 in Fig. 7.6.15.1)
see also Section 6.1 Block diagram

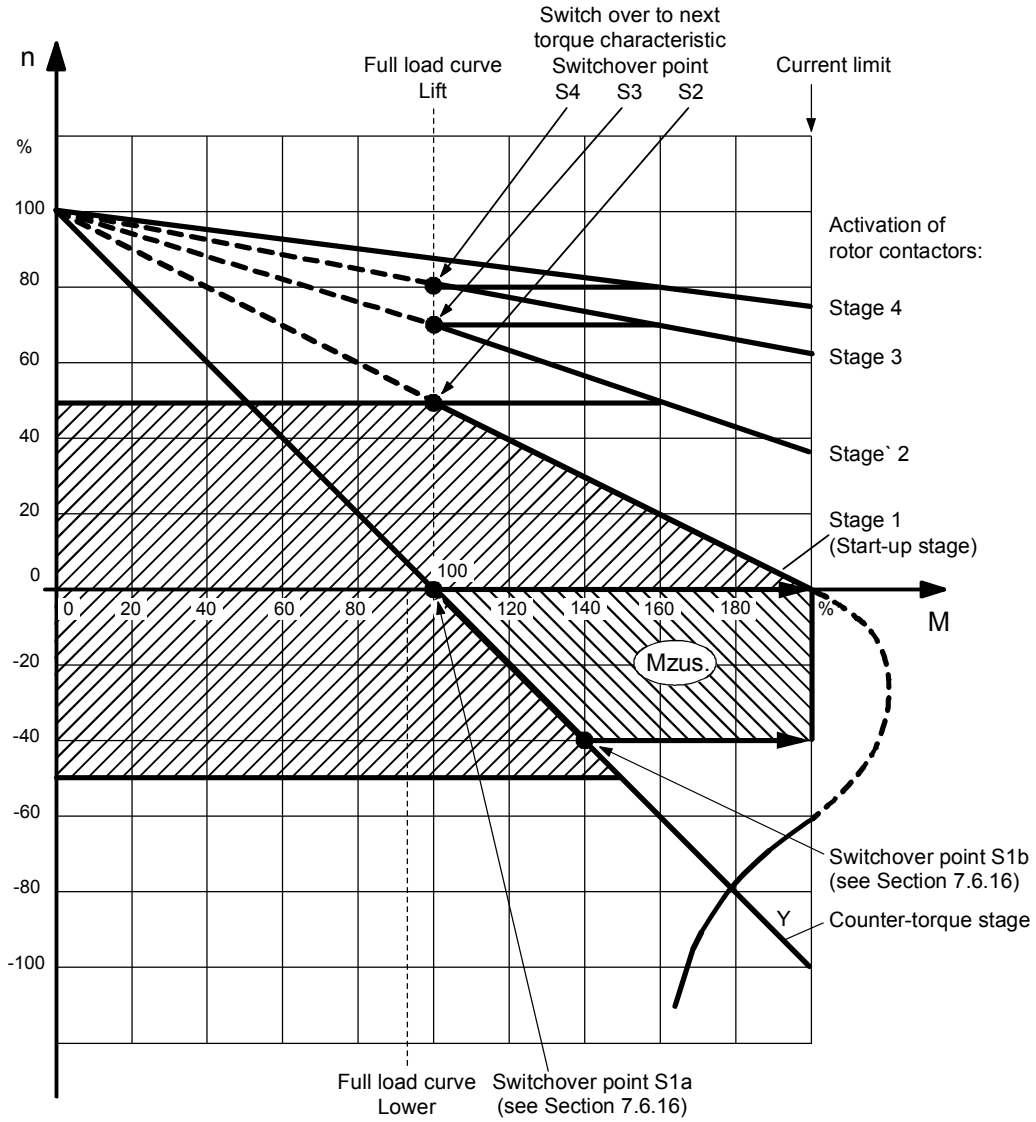

Fig. 7.6.15.1 Rotor contactor switching cycle

- with <u>increasing speed</u>:
  U634 Value at which the rotor contactor for stage 2 is to be connected
  U636 Value at which the rotor contactor for stage 3 is to be connected
  U638 Value at which the rotor contactor for stage 4 is to be connected

- with <u>decreasing speed</u>:
  U638 (– U639 hysteresis)
  Value at which the rotor contactor for stage 4 is to be disconnected
  U636 (– U637 hysteresis)
  Value at which the rotor contactor for stage 3 is to be disconnected
  U634 (– U635 hysteresis)
  Value at which the rotor contactor for stage 2 is to be disconnected

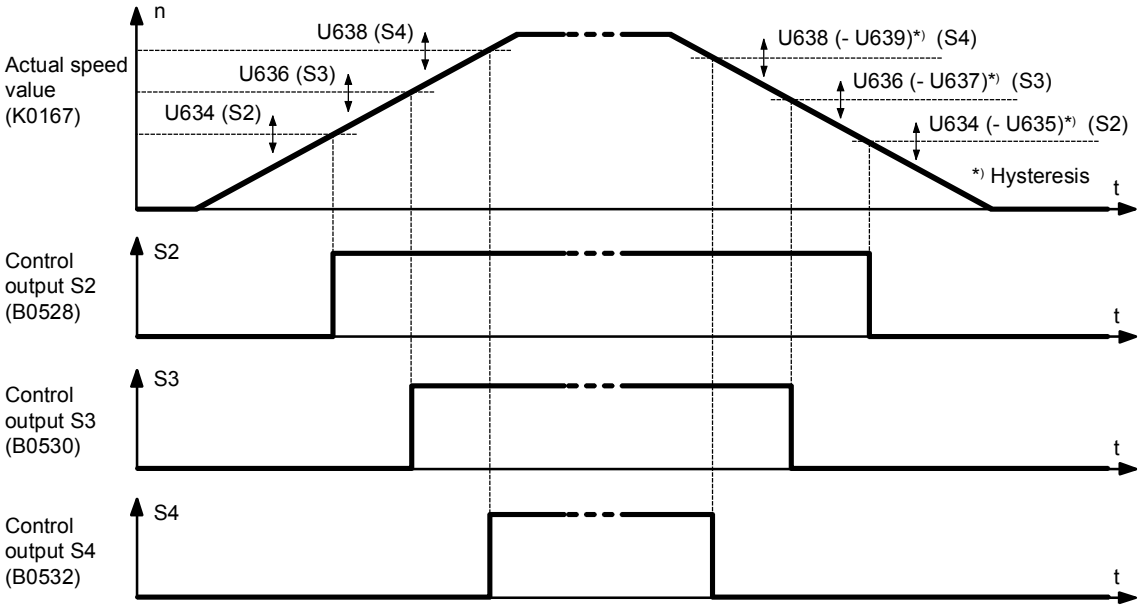

Fig. 7.6.15.2 Time characteristic of rotor contactor stepping

Preventing current peaks during rotor stage stepping:

- To prevent excessive stator current values occurring when switching in the next rotor contactor, it is desirable, at the same time as the contactor is switched in, to reduce the I component of the speed controller by roughly the same proportion by which the rotor resistance is also reduced. This enables the rotor current to be held at about the same value as before the switchover, despite the fact that the rotor resistance will now be lower.

  Setting instructions:
  U641 Reduction when connecting stage 1: R (stage 1) / R (counter-torque stage)
  U642 Reduction when connecting stage 2: R (stage 2) / R (stage 1)
  U643 Reduction when connecting stage 3: R (stage 3) / R (stage 2)
  U644 Reduction when connecting stage 4: R (stage 4) / R (stage 3)
  Example: Quotient = 0.8 ≙ U641 = 80.0%

Increasing rotor contactor service life:

Off-load switching is recommended to increase the service life of the rotor contactors.

- U640.001: Pick-up time of rotor contactors (zero current interval)
- U640.002: Drop-out time of rotor contactors (zero current interval)

A disadvantage of off-load switching of rotor contactors:
there is a torque-free interval, and this may lead to a deviation in the speed.

7.6.16 Counter-torque operation and premature switching over from counter-torque stage to start-up stage

Counter-torque operation means that an electrical phase in opposition to the mechanical speed is applied to the running motor in order to brake the drive.
The rotor resistance stage is connected to the greatest resistance during this process.
The counter-torque stage is left once the drive has been braked to zero speed (switchover point S1a in Fig. 7.6.15.1).

If rotor stage S1 is connected before the speed reaches zero (switchover point S1b in Fig. 7.6.15.1), the control range indicated by Mzus in Fig. 7.6.15.1 is gained.

The most common operating condition, where the response outlined above occurs, is the following:
Lifting gear with a large load:
The load is lowered at the maximum speed (power lowering).
The master switch is set to “zero position” or “Lift”.
A delay torque must now be applied in addition to the torque required to hold the load (e.g. 95% at rated load). When the drive is in counter-torque mode (i.e. the load is still being lowered), the delay torque becomes smaller as the speed reduces. If changeover takes place from the counter-torque stage to the start-up stage at a specific negative speed, the torque range designated Mzus in the diagram above is achieved.

- The value at which the early switchover from the counter-torque stage to the start-up stage in the “Delay lowering” operating condition occurs is set using parameter U630.

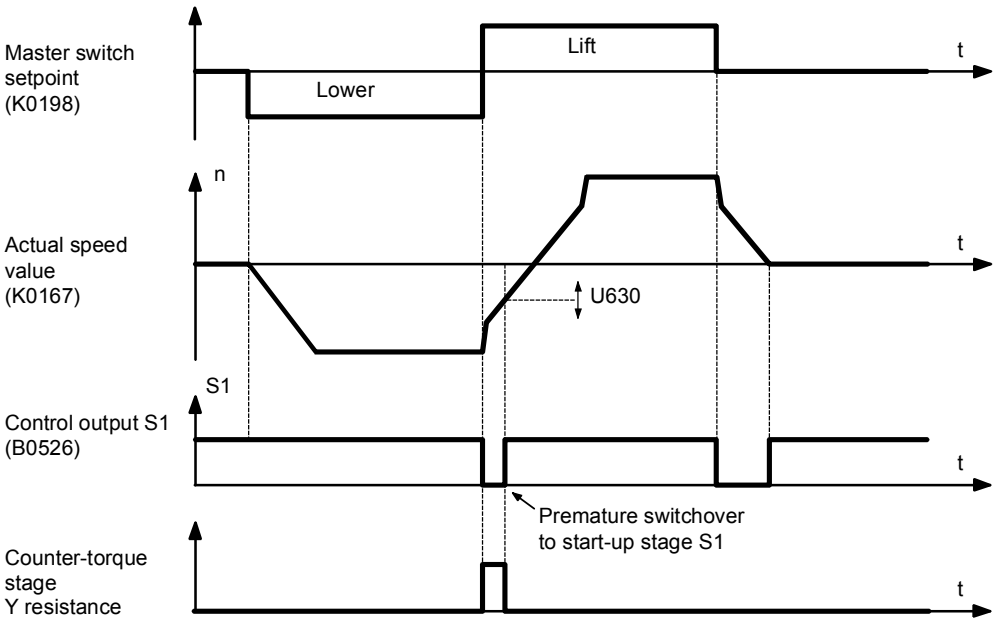

Fig. 7.6.16.1 Time characteristic for premature connection of start-up stage S1

7.6.17 Setting the ramp-down monitoring function

When the travel command is cancelled, SIMOTRAS HD will brake the drive electrically. The SIMOTRAS HD cancels the “Release brake” signal when the speed drops to below a minimum value (P370). A time stage is started at the beginning of the braking operation. If the time stage elapses before the minimum speed has been reached, a fault message (F023) is activated (and the firing pulses are disabled immediately and the “Release brake” signal cancelled)

- The time stage (U441) should be set to the value “parameterized ramp-down time + short safety time (e.g. 10% of the ramp-down time)”.

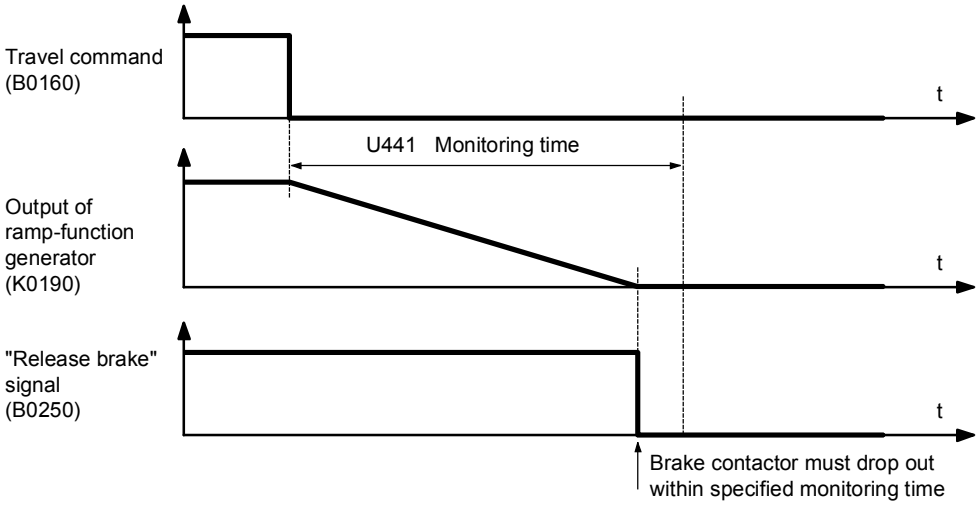

Fig. 7.6.17.1 Time characteristic of ramp-down monitoring

7.6.18 Setting up setpoint/actual value monitoring

The setpoint/actual value monitoring system constantly checks whether or not the actual speed is deviating from the setpoint speed (according to the ramp-function generator).

A time stage (P390) is started if the response threshold (P388) for the setpoint/actual value monitoring system is exceeded. The time stage is reset if the speed value does not drop below the response threshold again before the time stage elapses. Fault message F031 is activated when the time stage elapses.

In the controlled range, the setpoint/actual value monitoring system is not active. When switching back to the controlled range, a delay time (P387) will be running. The monitoring system will be active again after the delay time has elapsed.

- The following settings affect the setpoint/actual value monitoring system:

  P388 Response threshold

  P390 Time taken for time stage to activate the fault message F031

  P387 Delay time when changing back from open-loop to closed-loop range

7.6.19 Setting the setpoint reduction when pre-limit switches are activated

- Specify a full setpoint with the master switch.
- Remove control input VE1 or VE2 = "Pre-limit switch".
- When the pre-limit switches are activated, the speed setpoint is reduced proportionally.
- The reduction factor is set using parameter U608.
- The reduction of the setpoint when the pre-limit switches are activated applies to both directions of rotation.

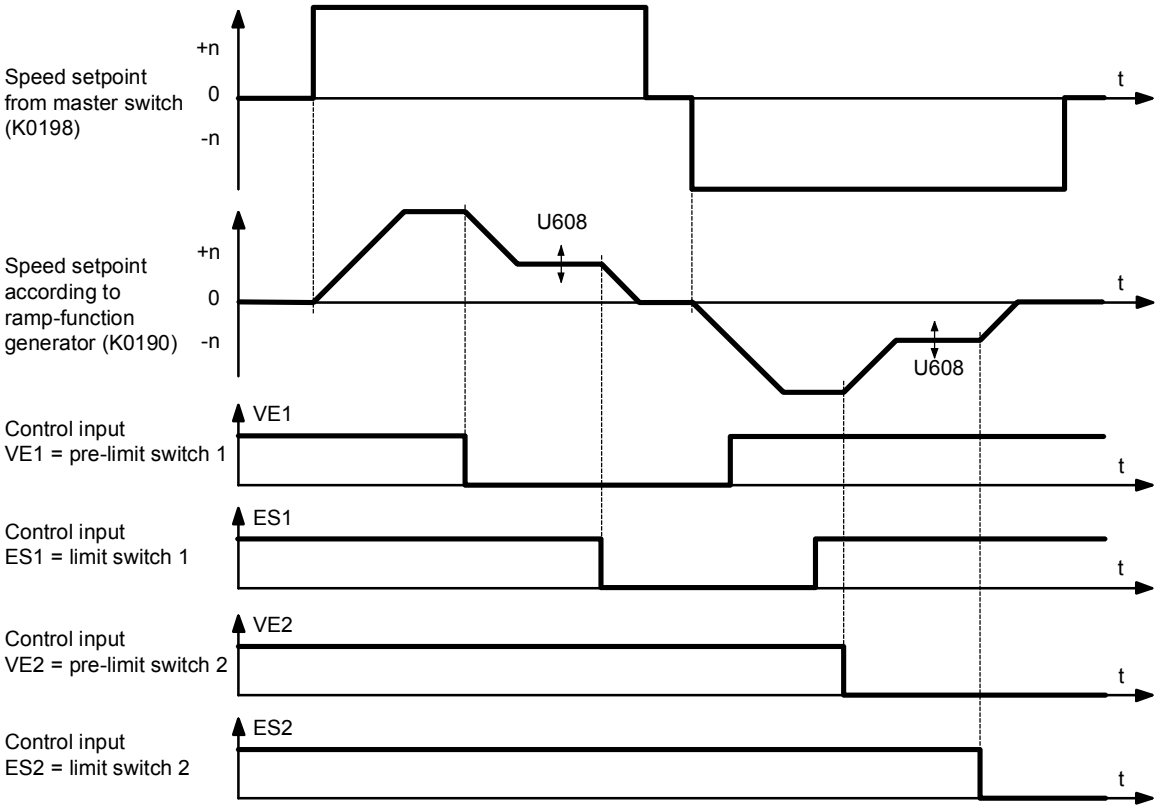

Fig. 7.6.19.1 Time characteristic of speed setpoint when pre-limit switches are activated

7.6.20 Documentation of setting values

- Read out parameters with DriveMonitor (see Section 15 “DriveMonitor”)

  or

- Document parameters
  If P052=0, only parameters that are not set to the default setting are displayed on the operator control panel.

7.7 SIMOTRAS HD troubleshooting table

Fault	Possible cause	Remedy
A fault or alarm message is pending	See Section 10	See Section 10
No current, although controller enabled	Not all enable conditions have been met	Evaluate operating state display on parameter r000 (see Section 11)
Drive accelerates uncontrollably	Tachometer not connected Coupling defective or not present.	Check the cabling for the tachometer, Check the coupling between tachometer and motor to make sure it is functioning correctly.
	Tachometer voltage has incorrect polarity	Reconnect tachometer (swap terminals 103 and 104)
Drive does not achieve rated speed	Actual speed value calibrated incorrectly	Check P741 and P140 to P143
Drive does not achieve rated speed when the machine is warm	Rotor resistance levels have changed due to the increase in temperature	• Check rotor resistance taps • Check rotor contactor stepping values (U634, U636, U638)
Tried everything, fault not found		Contact the relevant sales partner or your “authorized control centre” (see Section 14)

7.8 Data for existing drive

Customer/system	

Type of drive

☐ Lifting gear ☐ Trolley travel gear ☐ Crane travel gear ☐ Slewing gear ☐ Other

Movement of the lifting machine

☐ Slewing ☐ Horizontal ☐ Vertical ☐ Other

Speed	ms^{-1}	Rated speed	rpm
min. speed	rpm	max. speed	rpm

Acceleration ramp Clockwise/lifting	s
Deceleration ramp Clockwise/lifting	s
Acceleration ramp Anti-clockwise/lowering	s
Deceleration ramp Anti-clockwise/lowering	s

Switching frequency	Switching ops./hour	
Operating mode	% (to DIN VDE 0530)	e.g. S3 = 40%

Change in rotational direction: ☐ under load ☐ from standstill

Weight of drive

Empty:	kg	Under load:	kg

Motor data

Manufac.		Speed	rpm
Motor type		Frequency	Hz
Rated power	kW	Power factor	cos phi
Connection Y / Δ		Torque	Nm
Stator voltage	V	Rotor voltage	V
Stator current	A	Rotor current	A

Characteristic sheet:

Customer/system

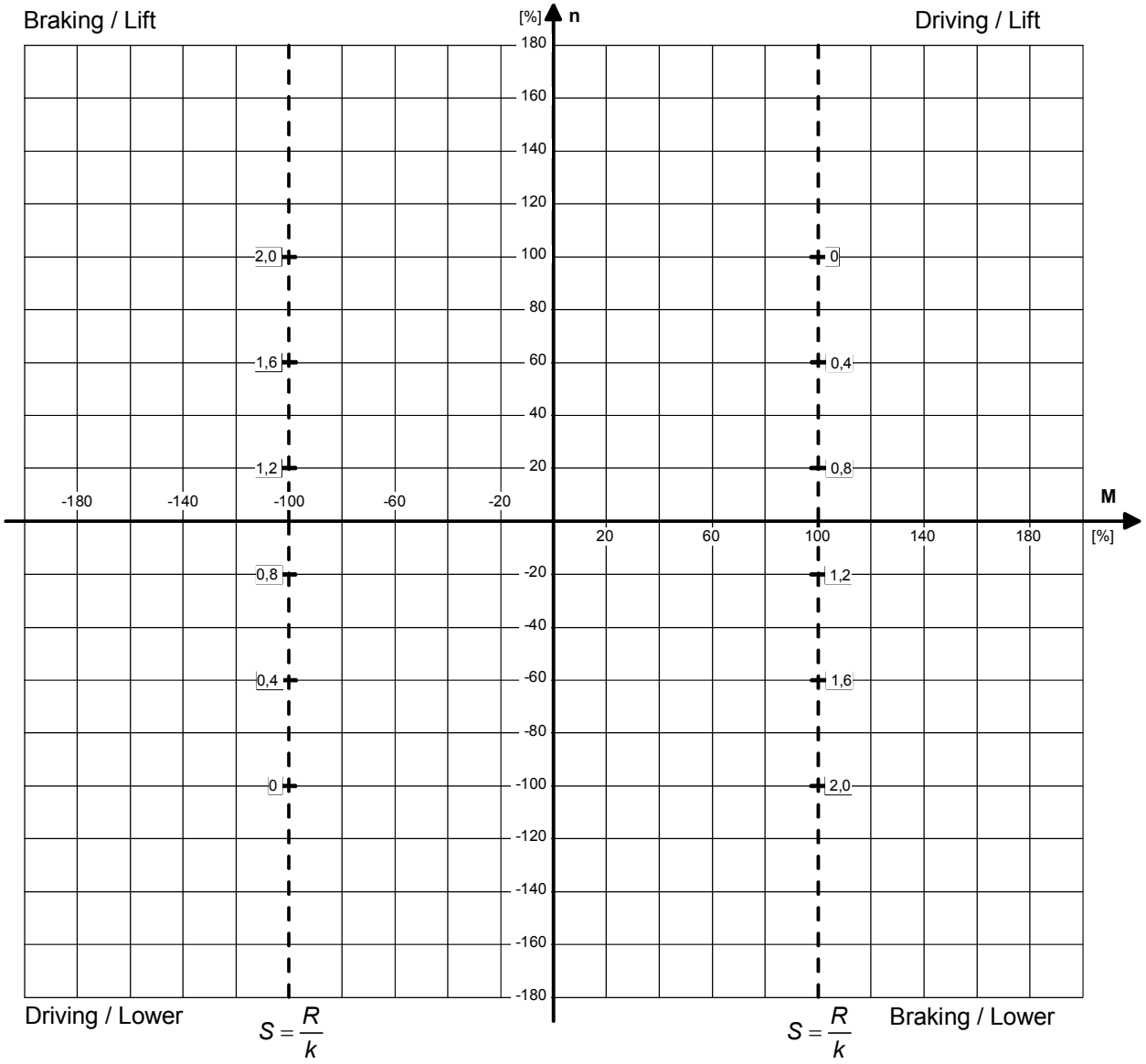

Control range: %

Char. rotor res.: $k = \frac{U_L}{I_L * \sqrt{3}}$

U_{ST} =	V	U_L =	V	k =	Ω/Phase
I_{ST} =	A	I_L =	A	selected: k' =	Ω/Phase

	Slip [s] at 100% M	Resistance [R] R = s * k	Threshold speed	
Stage 4		Ω/phase	+ %	to S4
Stage 3		Ω/ phase	+ %	to S3
Stage 2		Ω/ phase	+ %	to S2
Stage 1		Ω/ phase	- %	to S1
Counter-torque stage		Ω/phase		

7.9 SIMOTRAS HD – QUICK START INSTRUCTIONS

(Copy of carton supplied with this operating manual)

Requirements: Factory settings in place, connected according to suggested connection on the reverse side.

Access authorization

P051 = 40 all parameters can be modified

Motor data

P100 Rated motor current (in amps)

P114 Thermal time constant of motor (in minutes) (Factory setting: 10 min)
(0 ... monitoring switched off)

P490.001 Type of temperature sensor on terminal 22/23 (factory setting: 1)
0 .. no temperature sensor present
1 .. KTY84 P491 Alarm temperature (factory setting = 20°C)
4 .. PTC with Rn = 1330 Ohm: when R < Rn: B0184 = 0, when R > Rn: B0184 = 1

Speed sensing with analog tachometer (displayed on r002)

P083 = 1 Tachometer connected to terminals 103 and 104

P741 Tachometer voltage at maximum speed (approx. 8 V to +270.00) (factory setting: 60.00 V)

Speed sensing with pulse encoder (displayed on r024)

P083 = 2 Pulse encoder connected to terminals 28/29 and 30/31

P140 = 1 Pulse encoder has two pulse traces that are displaced by 90° (factory setting: 1)

P141 Number of pulses of pulse encoder (factory setting: 250 pulses per revolution)

P142 0 .. Pulse encoder outputs 5V signals
1 .. Pulse encoder outputs 15V signals (factory setting: 1)

P143 Maximum speed (rpm) (factory setting: 1450 rpm)

Speed setpoint normalization

P401 Speed setpoint that must be attained under control by master switch (factory setting: 60 %)
for lifting gear: approx. 60%, for travel gear: approx. 100%

U628 Threshold for zero delay angle setting

Current limits (actual current value displayed on r019)

P171 For torque direction I (as % of P100) (factory setting: +200 %)

P172 For torque direction II (as % of P100) (factory setting: -200 %)

Current controller

P155 Controller gain Kp (factory setting: 0.2)

P156 Reset time Tn (factory setting: 0.02 s)

Speed controller

P225 Controller gain Kp (factory setting: 3.0)

P226 Reset time Tn (factory setting: 0.2 s)

P200 Smoothing of actual speed value (factory setting: 10 ms)

Ramp-function generator

Ramp times for closed-loop operation		**Ramp times for open-loop operation**	
P303	Ramp-up time (factory setting: 10 s)	P307	Ramp-up time (factory setting: 10 s)
P304	Ramp-down time (factory setting: 10 s)	P308	Ramp-down time (factory setting: 10 s)
P305	Lower transition rounding (factory setting: 0 s)	P309	Lower transition rounding (factory setting:0 s)
P306	Upper transition rounding (factory setting: 0 s)	P310	Upper transition rounding (factory setting:0 s)

Start pulse for speed controller

U651 Start pulse for clockwise movement (= lifting) (as % of P100) (factory setting: 0 %)

U652 Start pulse reduction factor for anti-clockwise movement (= lowering) (factory setting: 50 %)

Rotor contactor stepping

U634 Speed at which the rotor contactor for stage 2 is switched in (factory setting: 50%)

U636 Speed at which the rotor contactor for stage 3 is switched in (factory setting: 75%)

U638 Speed at which the rotor contactor for stage 4 is switched in (factory setting: 90%)

U630 Speed at which the rotor contactor for stage 1 is prematurely switched in when in “Delay lowering” mode (counter-torque operation) (factory setting: -1%)

Ramp-down monitoring

U441 When the travel command is cancelled, the motor must have reached its minimum speed (P370) within the time specified here, otherwise the fault message F023 is activated (factory setting: 10.5 s)
(Recommended value: highest of P304 + 10% and P308 + 10%)

Setpoint reduction with pre-limit switch

U608 When approaching a pre-limit switch, the speed setpoint is multiplied by the value specified here (factory setting: 15%)

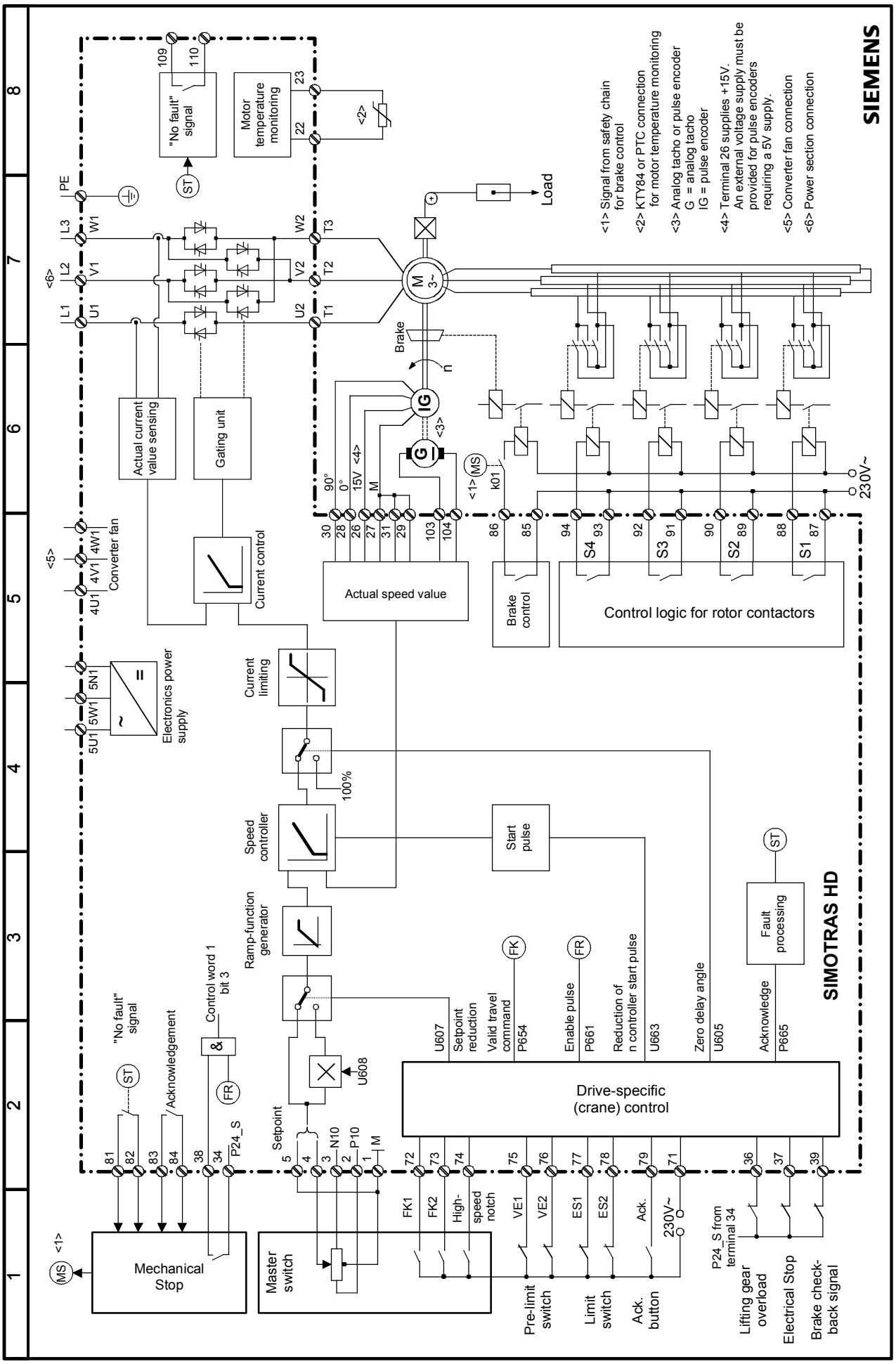
SIEMENS
SIMOTRAS HD
<1> Signal from safety chain for brake control
<2> KTY84 or PTC connection for motor temperature monitoring
<3> Analog tacho or pulse encoder G = analog tacho IG = pulse encoder
<4> Terminal 26 supplies +15V. An external voltage supply must be provided for pulse encoders requiring a 5V supply.
<5> Converter fan connection
<6> Power section connection
"No fault" signal
Motor temperature monitoring
Load
Actual current value sensing
Gating unit
Current control
Converter fan
Electronics power supply
Actual speed value
Brake control
Control logic for rotor contactors
Current limiting
Speed controller
Ramp-function generator
Start pulse
Fault processing
Drive-specific (crane) control
Control word 1 bit 3
Acknowledgement
Setpoint
Setpoint reduction
Valid travel command
Enable pulse
Reduction of n controller start pulse
Zero delay angle
Acknowledge
Mechanical Stop
Master switch
Pre-limit switch
Limit switch
Ack. button
Lifting gear overload
Electrical Stop
Brake check-back signal
P24_S from terminal 34
230V~

7.10 Starting up optional supplementary boards

For information about installing boards, please see Section 5.2.2, Optional supplementary boards. This section also contains details on the number of supplementary boards that can be installed and in which slots they may be inserted.

The basic converter automatically detects all installed supplementary boards during power-up.

All communications-related settings must be made by means of parameters. The function diagrams in Section 8 show a general overview of the parameters provided for this purpose.

If two boards of the same type (e.g. two EB1s) are installed in a converter, the slots in which they are installed determine the parameter settings. The board in the slot with the lower slot letter is the 1st board (e.g. the 1st EB1) of this particular type and the board with the higher letter the 2nd board (e.g. 2nd EB1).
The 1st board is parameterized via index 1 and the 2nd board via index 2 of the corresponding parameter (e.g. to define the signal type of the analog inputs of boards of type EB1, parameter U755.001 is used for the 1st EB1 and parameter U755.002 for the 2nd EB1).

7.10.1 Sequence of operations for starting up the T300 technology board

NOTE

Freely configurable technology boards T300 are guaranteed to operate correctly (board runup and data exchange with the SIMOTRAS 6SG70). The user, however, must bear responsibility for ensuring that the system is properly configured.

1 Disconnect the power supply and insert the board in location 2.

2 Power up the system again to gain access to the parameters of the technology board (d and H parameters, as well as c and L parameters if programmed).

The process data are interconnected at the basic converter end by means of the appropriate connectors and binectors (see Section 8, function diagram Z110)
For meaning of bits of control and status words, please see Section 8, Sheets G180 to G183.

If a communication board is used in addition to a technology board, then data are exchanged with the basic converter via the technology board. The basic converter cannot directly access the data of the communication board. The connections of the transfer data are then determined by the configuration or parameter settings of the technology board.

If a technology board is mounted in location 2, then only one communication board (CBP2, CBC, ...) may be installed in slot G. Other boards are not supported.

7.10.2 Sequence of operations for starting up PROFIBUS boards (CBP2)

1 Switch off the power supply and insert the board or adapter with board. For board mounting instructions, see Section 5, Mounting Optional Supplementary Boards.

2 The following are important communication parameters. Index 1 of each parameter is set for the 1st communication board (1st CB) and index 2 for the 2nd communication board (2nd CB):

- U712 PPO type, definition of the number of words in the parameter and process data section of the telegram (required only if the PPO type cannot be set via PROFIBUS-DP master)
- U722 Telegram failure time for process data (0 = deactivated)
  The DP master configuring data determine whether the slave (CBP2) must monitor telegram traffic with the master. If this monitoring function is activated, the DP master passes a time value (watchdog time) to the slave when the link is set up. If no data are exchanged within this period, the slave terminates the process data exchange with the SIMOTRAS HD converter. The latter can monitor the process data as a function of U722 and activate fault message F082.
- P918 Bus address
- P927 Parameterization enable (need only be set if parameters are to be assigned via PROFIBUS)
- The process data of the 1st or 2nd communication board are connected by means of the appropriate connectors and binectors (see Section 8, function diagrams Z110 and Z111) For meaning of bits of control and status words, please see Section 8, Sheets G180 to G183.

3 Turn the electronics supply voltage off and on again or set U710.001 or U710.002 to "0" to transfer the values of parameters U712, U722 and P918 to the supplementary board.

WARNING

This initialization process will interrupt the communication of any supplementary board that has already been started up.

WARNING

Note the setting of parameter U722. In the factory setting of U722 (monitoring deactivated) the drive continues to run with the last received setpoints in case of a PROFIBUS failure and can only be stopped by an OFF signal from the terminal. For details, see Section 11, Parameter list.

The CBP2 (Communication Board PROFIBUS) serves to link drives and higher-level automation systems via the PROFIBUS-DP. For the purpose of PROFIBUS, it is necessary to distinguish between master and slave converters.

Masters control the data traffic via the bus and are also referred to as **active nodes**. There are two classes of master:
DP masters of class 1 (DPM1) are central stations (e.g. SIMATIC S5, SIMATIC S7 or SIMADYN D) which exchange data with slaves in predefined message cycles.
DPM1s support both a **cyclic channel** (transmission of process data and parameter data) and an **acyclic channel** (transmission of parameter data and diagnostic data).
DP masters of class 2 (DPM2) are programming, configuring or operator control/visualization devices (e.g. DriveMonitor) which are used in operation to configure,

start up or monitor the installation.
DPM2s support only an **acyclic channel** for transferring parameter data.

The contents of the data frames transferred via these channels are identical to the structure of the parameter section (PKW) as defined by the USS specification.

The following diagram shows the services and channels supported by a CBP:

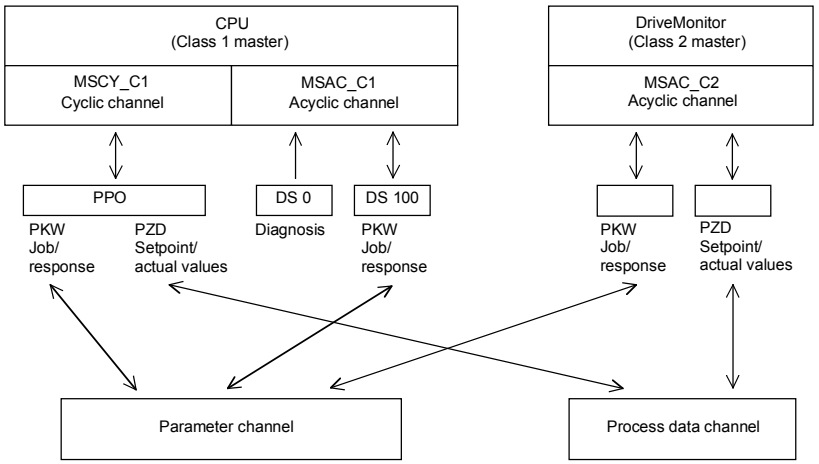

Slaves (e.g. CBP2) may only respond to received messages and are referred to as **passive nodes**.

PROFIBUS (**Pro**cess **Fi**eld Bus) combines high baud rates (to RS485 standard) with simple, low-cost installation. The PROFIBUS baud rate can be selected within a range of 9.6 kbaud to 12 Mbaud and is set for all devices connected to the bus when the bus system is started up.
The bus is accessed according to the token-passing method, i.e. permission to transmit for a defined time window is granted to the active stations (masters) in a "logical ring". The master can communicate with other masters, or with slaves in a subordinate master-slave process, within this time window.
PROFIBUS-**DP** (**D**istributed **P**eripherals) predominantly utilizes the master-slave method and data is exchanged cyclically with the drives in most cases.

The user data structure for the **cyclic channel MSCY_C1** (see picture above) is referred to as a Parameter Process(data) Object (**PPO**) in the PROFIBUS profile for variable-speed drives. This channel is also frequently referred to as the **STANDARD** channel.
The user data structure is divided into two different sections which can be transferred in each telegram:

PZD section
The process data (PZD) section contains control words, setpoints, status words and actual values.

PKW section
The parameter section (PKW - Parameter ID Value) is used to read and write parameter values.

When the bus system is started up, the type of PPO used by the PROFIBUS master to address the drive is selected. The type of PPO selected depends on what functions the drive has to perform in the automation network.

Process data are always transferred and processed as priority data in the drive.
Process data are "wired up" by means of connectors of the basic unit (drive) or via technology board parameters, if these are configured.

Parameter data allow all parameters of the drive to be accessed, allowing parameter values, diagnostic quantities, fault messages, etc. to be called by a higher-level system without impairing the performance of the PZD transmission.

A total of five PPO types are defined:

	PKW section				PZD section									
	PKE	IND	PWE		PZD1 STW 1 ZSW 1	PZD2 HSW HIW	PZD3	PZD4	PZD5	PZD6	PZD7	PZD8	PZD9	PZD 10
	1st word	2nd word	3rd word	4th word	1st word	2nd word	3rd word	4th word	5th word	6th word	7th word	8th word	9th word	10th word
PPO1														
PPO2														
PPO3														
PPO4														
PPO5														

PKW:	Parameter ID value	IND:	Index	ZSW	Status word
PZD:	Process data	PWE:	Parameter value	HSW:	Main setpoint
PKE:	Parameter identifier	STW:	Control word	ISW:	Main actual value

The **acyclic channel MSCY_C2** (see diagram above) is used exclusively for the start-up and servicing of DriveMonitor.

7.10.2.1 Mechanisms for processing parameters via the PROFIBUS:

The PKW mechanism (with PPO types 1, 2 and 5 and for the two acyclic channels MSAC_C1 and MSAC_C2) can be used to read and write parameters. A parameter request job is sent to the drive for this purpose. When the job has been executed, the drive sends back a response. Until it receives this response, the master must not issue any new requests, i.e. any job with different contents, but must repeat the old job.

The parameter section in the telegram always contains at least 4 words:

	Parameter identifier PKE	Index IND	Parameter value 1 PWE1 (H word)	Paramter value 2 PWE2 (L word)	

Details about the telegram structure can be found in Section 7.10.7, "Structure of request/response telegrams“, and in the PROFIBUS profile "PROFIBUS Profile, Drive technology" of the user's organization PROFIBUS International (http://www.profibus.com).

The **parameter identifier PKE** contains the number of the relevant parameter and an identifier which determines the action to be taken (e.g. "read value").

The **index IND** contains the number of the relevant index value (equals 0 in the case of nonindexed parameters). The IND structure differs depending on the communication mode:

- Definition in the PPOs (structure of IND with cyclical communication via PPOs)
- Definition for acyclical channels MSAC_C1 and MSAC_C2 (structure of IND with acyclical communication)

The array subindex (referred to simply as "subindex" in the PROFIBUS profile) is an 8-bit value which is transferred in the **high-order** byte (bits 8 to 15) of the index (IND) **when data are transferred cyclically via PPOs**. The low-order byte (bits 0 to 7) is not defined in the DVA profile. The low-order byte of the index word is used in the PPO of CBP2 to select the correct number range (bit7 = Page Select bit) in the case of parameter numbers of > 1999.

In the case of **acyclical data traffic** (MSAC_C1, MSAC_C2) the number of the index is transferred in the **low-order** byte (bits 0 to 7). Bit 15 in the high-order byte is used as the Page Select bit. This assignment complies with the USS specification.

Index value 255 (request applies to all index values) is meaningful only for acyclical transmission via MSAC_C1. The maximum data block length is 206 bytes with this transmission mode.

The **parameter value PWE** is always transferred as double word (32-bit value) PWE1 and PWE2. The high-order word is entered as PWE1 and the low-order word as PWE2. In the case of 16-bit values, PWE1 must be set to 0 by the master.

Example (acyclical data traffic):

Read parameter P101.004 (for details, see Section 7.10.7, "Structure of request/response telegrams“):

Request identifier PKE = 0x6065 (request parameter value (array) P101),
Index IND = 0004h = 4d
Parameter value PWE1 = PWE2 = 0

SIMOTRAS HD response:

Response identifier PKE = 0x4065,
Index IND = 0004h = 4d
Value of P101.004 = 0190h = 400d (PWE1 = 0, because it is not a double word parameter)

Rules for job/response processing:

A job or a response can only ever refer to one parameter.

The master must send the job repeatedly until it receives an appropriate response from the slave. The master recognizes the response to the job it has sent by analyzing the response identifier, the parameter number, the parameter index and the parameter value.

The complete job must be sent in one telegram. The same applies to the response.

The actual values in repeats of response telegrams are always up-to-date values.

If no information needs to be fetched via the PKW interface (but only PZD) in cyclic operation, then a "No job" job must be issued.

PROFIBUS devices have a variety of difference performance features. In order to ensure that all master systems can correctly address each supplementary board, the characteristic features of each board are stored in a separate device master file (GSD).
You need file <siem8045.gsd> for CBP2.
The appropriate file can be chosen in the selection menu for the SIMOVERT MASTER DRIVES files in later versions of the configuring tool.
If a device master file is not available in the menu, it can be collected from an Internet site. The Internet address is http://www4.ad.siemens.de/view/cs/en/4647098 .
Product Support/PROFIBUS GSD files/Drives/ . Have all entries displayed using the search function and click on the search results.

SIMOVERT/SIMOREG/SIMADYN CBP
File: siem8045.gsd

The communication boards can only be operated on a non-Siemens master as a DP standard slave, the corresponding GSD file containing all necessary information for this mode.

Detailed information about communication via PROFIBUS can be found in Section 8.2 of the compendium for SIMOVERT MASTER DRIVES Motion Control (order no. 6SE7080-0QX50). The description in this document is fully applicable in every respect, except that the specified parameter numbers differ from those used on the SIMOTRAS HD 6SG70.

7.10.2.2 Diagnostic tools:

LED displays of CBP2 (flashing LEDs mean normal operation):

Red LED	Status of CBP2
Yellow LED	Communication between SIMOTRAS HD and CBP2
Green LED	Communication between CBP2 and PROFIBUS

As a start-up support tool, the PROFIBUS board supplies data which can be displayed in n732.001 to n732.032 (1st CB) or n732.033 to n732.064 (2nd CB).
The values of the indices are as follows:

Index	Meaning for CBP2
001/033	CBP_Status Bit0: "CBP Init", CBP is being initialized or waiting to be initialized by the basic unit (not set in normal operation) Bit1: "CBP Online", CBP is selected by basic unit (set in normal operation) Bit2: "CBP Offline", CBP not selected by basic unit (not set in normal operation) Bit3: Illegal bus address (P918) (not set in normal operation) Bit4: Diagnostic mode activated (U711 <> 0) (not set in normal operation) Bit8: Incorrect identifier bytes transferred (incorrect configuring message from PROFIBUS Master) (not set in normal operation) Bit9: Incorrect PPO type (incorrect configuring message from PROFIBUS Master) (not set in normal operation) Bit10: Correct configuring data received from PROFIBUS_DP Master (set in normal operation) Bit12: Fatal error detected by DPS Manager software (not set in normal operation) Bit13: Program in endless loop in main.c (loop can only be exited by a Reset) Bit15: Program in communications online loop (loop can only be exited through re-initialization by basic unit)
002/034	SPC3_Status Bit0: Offline/Passive Idle (0=SPC3 is operating in normal mode (offline) 1=SPC3 is operating in Passive Idle) Bit2: Diag flag (0=diagnostic buffer has been picked up by master 1= diagnostic buffer has not been picked up by master) Bit3: RAM Access Violation, memory access >1.5kB (0=no address violation, 1=for addresses > 1536 bytes, 1024 is subtracted from address and access made to the new address) Bit4+5: DP state (00=Wait_Prm, 01=Wait_Cfg, 10=Data_Ex, 11=not possible) Bit6+7: WD state (00=Baud search, 01=Baud_Control, 10=DP_Control, 11=not possible) Bit8-11: Baud rate (0000=12MBd, 0001=6MBd, 0010=3MBd, 0011=1,5MBd, 0100=500kBd, 0101=187.5kBd, 0110=93.75kBd, 0111=45.45kBd, 1000=19.2kBd, 1001=9.6kBd) Bit12-15: SPC3-Release (0000=Release 0)
003/035	SPC3_Global_Controls Bits remain set until the next DP global command Bit1: 1=Clear_Data message received Bit2: 1=Unfreeze message received Bit3: 1=Freeze message received Bit4: 1=Unsync message received Bit5: 1=Sync message received
004/036	L byte: No. of received error-free messages (DP Standard only) H byte: Reserved
005/037	L byte: "Timeout" counter H byte: Reserved
006/038	L byte: "Clear Data" counter H byte: Reserved
007/039	L byte: "Heartbeat counter error" counter H byte: Reserved
008/040	L byte: No. bytes for special diagnosis H byte: Reserved
009/041	L byte: Mirroring of slot identifier 2 H byte: Mirroring of slot identifier 3
010/042	L byte: Mirroring of P918 (CB bus addr.) H byte: Reserved
011/043	L byte: "Re-config. by CUD" counter H byte: "Initialization runs" counter
012/044	L byte: Error ID DPS manager error H byte: Reserved

Index	Meaning for CBP2
013/045	L byte: PPO type found H byte: Reserved
014/046	L byte: Mirroring of "DWord specifier ref"
015/047	H byte: Mirroring of "DWord specifier act"
016/048	L byte: DPV1:DS_Write, pos. ack. counter H byte: Reserved
017/049	L byte: DPV1:DS_Write, neg. ack. counter H byte: Reserved
018/050	L byte: DPV1:DS_Read, pos. ack. counter H byte: Reserved
019/051	L byte: DPV1:DS_Read, neg. ack. counter H byte: Reserved
020/052	L byte: DP/T:GET DB99 pos. ack. counter H byte: DP/T:PUT DB99 pos. ack. counter
021/053	L byte: DP/T:GET DB100 ps. ack. counter H byte: DP/T:PUT DB100 ps. ack. counter
022/054	L byte: DP/T:GET DB101 ps. ack. counter H byte: DP/T:PUT DB101 ps. ack. counter
023/055	L byte: DP/T service neg. acknow. counter H byte: DP/T:Application association pos. acknow. counter
024/056	Reserved
025/057	Date of creation: Day, month
026/058	Date of creation: Year
027/059	Software version (Vx.yz, display x)
028/060	Software version (Vx.yz, display yz)
029/061	Software version: Flash-EPROM checks.
030/062	Reserved
031/063	Reserved
032/064	Reserved

Fault and alarm messages:

For details about fault messages, see Section 10.

Fault F080
An error occurred as board CBP2 was being initialized, e.g. incorrect value of a CB parameter, incorrect bus address or defective module.

Fault F081
The heartbeat counter (counter on CBP2) which is monitored by SIMOTRAS HD for "signs of life" from the board has not changed for at least 800 ms.

Fault F082
Failure of PZD telegrams or a fault in the transmission channel.

Alarm A081 (1st CB) or **alarm A089** (2nd CB)
The identifier byte combinations transmitted by the DP master in the configuration telegram do not match the permitted identifier byte combinations (configuring error on DP master)
Effect: No link can be established with the DP master, reconfiguration necessary.

Alarm A082 (1st CB) or **alarm A090** (2nd CB)
No valid PPO type can be determined from the configuration telegram from the DP master.
Effect: No link can be established with the DP master, reconfiguration necessary.

Alarm A083 (1st CB) or **alarm A091** (2nd CB)
No user data, or only invalid data, are being received from the DP master.
Effect:The process data are not transferred to the basic unit. When the telegram failure monitoring function is active (U722 set to value other than 0), this disturbance generates fault message F082 with fault value 10.

Alarm A084 (1st CB) or **alarm A092** (2nd CB)
The exchange of data between the communication board and DP master has been interrupted (e.g. cable break, bus connector removed or DP master switched off).
Effect: When the telegram failure monitoring function is active (U722 set to value other than 0), this disturbance generates fault message F082 with fault value 10.

Alarm A085 (1st CB) or **alarm A093** (2nd CB)
Error in the DPS software of the communication board.
Effect: Fault message F081 is generated.

Alarm A086 (1st CB) or **alarm A094** (2nd CB)
Failure of heartbeat counter detected by SIMOTRAS HD master.
Effect: Interruption in communication with PROFIBUS.

Alarm A087 (1st CB) or **alarm A095** (2nd CB)
DP slave software has detected serious fault, fault number in diagnostic parameter n732.08.
Effect:Total communication failure (secondary fault F082).

Alarm A088 (1st CB) or **alarm A096** (2nd CB)
At least 1 configurable internode transmitter is not yet active or has failed again (for details, see diagnostic parameter n732).
Effect:If a transmitter is not yet active, the associated setpoints are set to "0" as an alternative. If an internode transmitter fails again, transmission of the setpoints to the SIMOTRAS HD may be interrupted depending on the setting of U715 (with secondary fault F082).

7.10.3 Sequence of operations for starting up CAN bus boards (CBC)

1 With the power supply switched off, insert the board with adapter board (ADB) into the slot. For board mounting instructions, see Section 5, Mounting Optional Supplementary Boards.

2 The following are important communication parameters. Index 1 of each parameter is set for the 1st communication board (1st CB) and index 2 for the 2nd communication board (2nd CB): Exception: In parameter U721, i001 to i005 are applicable to the 1st CB and i006 to i010 to the 2nd CB (indices 3 to 5 and 8 to 10 are reserved).
The meaning of the parameters also differs depending on the setting of U721, i.e. CAN-Layer 2 (U721=0) and CANopen (U721=1):

	CAN-Layer 2	CANopen
U711	Basic identifier for PKW Request/PKW Response	1st Receive-PDO
U712	Basic identifier for PZD Receive	2nd Receive-PDO
U713	Basic identifier for PZD Send	3rd Receive-PDO
U714	Number of PZD for PZD Send	4th Receive-PDO
U715	Updating rate for PZD Send	1st Transmit-PDO
U716	Basic identifier for PZD Receive-Broadcast	2nd Transmit-PDO
U717	Basic identifier for PZD Receive-Multicast	3rd Transmit-PDO
U718	Basic identifier for PZD Receive-Internode	4th Transmit-PDO
U719	Basic identifier for PKW Request-Broadcast	Response to Life Time Event
U720	Baud rate when U721.002 or U721.007 = 0: 0=10kbit/s, 1=20kbit/s, 2=50kbit/s, 3=100kbit/s, 4=125kbit/s, 5=250kbit/s, 6=500kbit/s, 7=Reserved, 8=1Mbit/s	Baud rate when U721.002 or U721.007 = 0: 0=10kbit/s, 1=20kbit/s, 2=50kbit/s, 3=100kbit/s, 4=125kbit/s, 5=250kbit/s, 6=500kbit/s, 7=Reserved, 8=1Mbit/s
U721.01 or U721.06	**0** = Functionality according to Layer 2 of ISO-OSI-7 Layer Model	**1** = Functionality according to Layer 7 of ISO-OSI-7 Layer Model (CANopen)
U721.02 or U721.07	Bus timing (this should not be changed)	Bus timing (this should not be changed)
U722	Telegram failure time (0 = deactivated)	Telegram failure time (0 = deactivated)
P918	Bus address (node ID)	Bus address (node ID)
P927	Parameterizing enable (required only in cases where parameter values must be altered via the CAN Bus)	Parameterizing enable (required only in cases where parameter values must be altered via the CAN Bus)

The process data of the 1st or 2nd communication board are connected by means of the appropriate connectors and binectors (see Section 8, function diagrams Z110 and Z111) For meaning of bits of control and status words, please see Section 8, Sheets G180 to G183.

3 Turn the electronics supply voltage off and on again or set U710.001 or U710.002 to "0" to transfer the values of parameters U711 to U721 and P918 to the supplementary board. Note: The initialization process may interrupt the communication link to a supplementary board which is already operational.

WARNING

This initialization process will interrupt the communication of any supplementary board that has already been started up.

The CAN (**C**ontroller **A**rea **N**etwork) fieldbus is being used increasingly for industrial applications in spite of its limited network length (max. 40 m with a data transmission rate of 1 Mbaud).

Data are transferred by means of telegrams. Each data message, the so-called **COBs** (**C**ommunication **Ob**jects), has its own individual **identifier** and contains a maximum of 8 bytes of user data. The CBC board uses the Standard Message Format with **11-bit identifier**. Simultaneous use by other nodes of Extended Message Format with 29-bit identifiers is tolerated, but messages with this format are not evaluated.
Nodes on the bus determine from the identifier which telegrams apply to them. The COBs to be sent and received by each node must be defined before data transmission commences.
The identifiers also determine bus accessing priority. Low identifiers gain faster access to the bus, i.e. they have higher priority then high identifiers.

Errored telegrams can be reliably detected by means of a number of interactive error detection mechanisms. A transmission is automatically repeated when errors are detected.

The figure below shows a diagram of the CAN architecture model that is oriented toward the ISO-OSI-7 layer reference model. The CBC supports the functionalities provided by layers 2 and 7 of this model.

Functionality according to layer 2
The user data from the user software (as COBs on byte level) must be transferred directly to layer 2 (see also the examples of PZD and PKW data exchange given further down).

Functionality according to layer 7 (CANopen)
Process data are exchanged rapidly by means of so-called PDOs (**P**rocess **D**ata **O**bjects) analogous to the transmission method used for layer 2.
Parameter data are exchanged by means of so-called SDOs (**S**ervice **D**ata **O**bjects).

<table>
<tr><td colspan="3"></td><td>CAN protocol</td><td>Device net</td></tr>
<tr><td rowspan="2">Application</td><td></td><td>Device profile</td><td></td><td rowspan="3">Device net specification includes:
- Device profile
– Communication profile
– Application layer</td></tr>
<tr><td></td><td>Communication profile</td><td>CIA
DS 301</td></tr>
<tr><td rowspan="5">Communication</td><td>Layer 7</td><td>Application layer</td><td>CIA CAL
DS 201 .. 205, 207
CANopen
CAL</td></tr>
<tr><td>Layer 3-6</td><td></td><td colspan="2"></td></tr>
<tr><td>Layer 2</td><td>Data link layer</td><td colspan="2">ISO-DIS 11898</td></tr>
<tr><td rowspan="2">Layer 1</td><td>Physical layer, electrical</td><td colspan="2"></td></tr>
<tr><td>Physical layer, mechanical</td><td>CIA DS 102-1</td><td>Device Net ODVA</td></tr>
</table>

7.10.3.1 Description of CBC with CAN Layer 2

User data are exchanged between the CAN master and the CAN boards on the drives, i.e. the slaves. User data are categorized as either process data (control and status information, setpoints and actual values) or data which relate to parameters.
Process data (**PZD**s) are time-critical and therefore processed faster by the drive (every 3.3 ms at system frequency of 50 Hz) than the non-time-critical **PKW data** (parameter identifier value), which is processed by the drive every 20 ms.
All settings required to operate the communication board are made in drive parameters (see Section 8, function diagrams Z110 and Z111).

Process data (PZD) are categorized as either data received by the drive (control words and setpoints: **PZD Receive**) or data transmitted by the drive (status words and actual values: **PZD Send**). A maximum of 16 PZDs can be transferred in either direction; these are divided into COBs with 4 data words each by the communication board. In other words, 4 COBs are required to transfer 4 PZD words, with each COB requiring its own separate identifier. Identifiers are assigned in the CB parameters as shown in the following diagram:

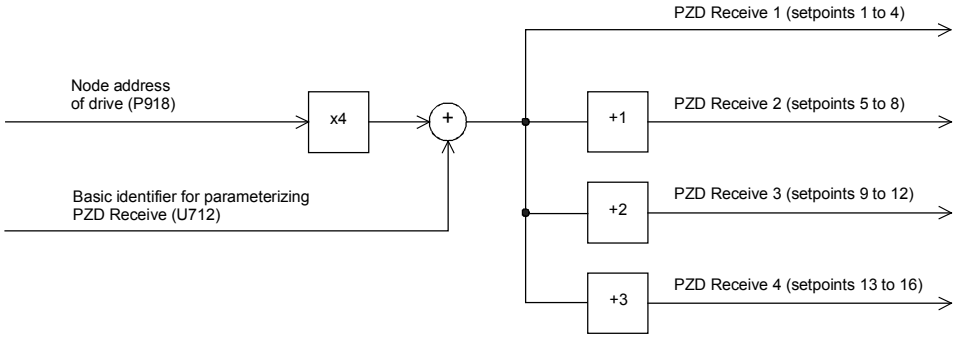

Example of PZD Receive:

P918 = 1 U712 = 96	This settings assigns identifier 100 to the first 4 receive PZDs, identifier 101 to the second 4 receive PZDs, etc.

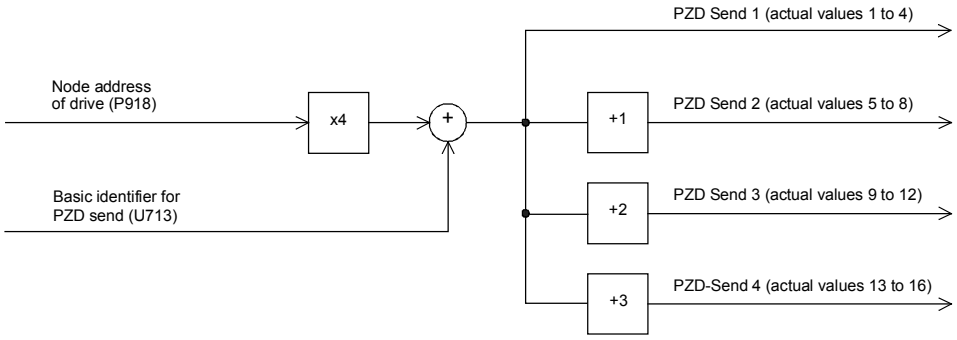

Example of PZD Send:

P918 = 1 U713 = 196	This setting assigns identifier 200 to the first 4 send PZDs, identifier 201 to the second 4 send PZDs, etc.

How received data are utilized by the drive or which data are to be sent by the drive is determined by connectors (see Section 8, function diagrams Z110 and Z111).

3 different modes of COB transmission can be selected in CB parameter 5 (U715):

U715 = 0	Actual values are transmitted only on request (Remote Transmission Requests)
U715 = 1 to 65534	Actual values are transmitted after the set time [ms] or on request (Remote Transmission Requests)
U715 = 65535	Actual values are transmitted if the values have changed (event) or on request (Remote Transmission Requests). This option should only be used in cases where values seldom change so as to prevent excessive bus loading.

Structure of a telegram for PZD data exchange:

The telegram consists of the following data words:

Identifier ID	Process data word 1 PZD1	Process data word 2 PZD2	Process data word 3 PZD3	Process data word 4 PZD4

ID is the CAN identifier that is defined for the COB in question by parameterization.

PZDx are process data words

Example of a PZD setpoint telegram:

Using the receive identifier of the above example

Receive identifier	100_d	0064_h	
1. Setpoint	40063_d	$9C7F_h$	control word 1
2. Setpoint	8192_d	2000_h	speed setpoint 50%
3. Setpoint	123_d	$007B_h$	
4. Setpoint	0_d	0_h	

Using the CAN BusAnalyser++ from Steinbeis, the setpoint data appear as follows (data field length = 8 bytes, low and high bytes are shown swapped round):

Identifier	Data field			
64 00	7F 9C	00 20	7B 00	00 00
ID	PZD1	PZD2	PZD3	PZD4

The following functions are also available, each allowing a maximum of 16 process data to be transferred:

PZD Receive Broadcast
This function is used to send setpoints and control words from the master **to all slaves** on the bus simultaneously. With this option, an identical identifier must be set on all slaves utilizing the function. This common identifier is set in CB parameter 6 (U716). The first 4 PZDs are transferred with the value set in U716 and the second 4 PZDs with the value in U716+1, etc.

PZD Receive Multicast
This function is used to send setpoints and control words from the master to a **group of slaves** on the bus simultaneously. With this option, all slaves within the group using the function must be set to an identical identifier. This group identifier is set in CB parameter 7 (U717). The first 4 PZDs are transferred with the value set in U717 and the second 4 PZDs with the value in U717+1, etc.

PZD Receive Internode
This function is used to **receive** setpoints and control words **from another slave**, allowing PZDs to be exchanged between drives without intervention by a CAN master. For this purpose, the identifier of PZD Receive Internode on the receiving slave must be set to the identifier of PZD Send on the transmitting slave. This identifier is set in CB parameter 8 (U718). The first 4 PZDs are transferred with the value set in U718 and the second 4 PZDs with the value in U718+1, etc.

Notes regarding PZD transmission:

Control word 1 must always be transferred as the first PZD word for setpoints. If control word 2 is needed, then it must be transferred as the fourth PZD word.

Bit 10 (control by PLC) must always be set in control word 1 or else the drives will not accept setpoints and control words.

The consistency of process data can only be guaranteed within a COB. If more than 4 data words are needed, these must be divided among several COBs. Since drives accept the data asynchronously, the data transferred in several COBs may not always be accepted and processed in the same processing cycle.
For this reason, interrelated data should be transferred within the same COB. If this is not possible, data consistency can be assured by means of control word bit 10 (control by PLC), i.e. by setting the bit to "off" in the first COB to temporarily prevent the drive from accepting the data from the communications board. The remaining data are then transmitted. Finally, a COB containing a control word bit 10 set to "on" is transmitted. Since a drive can accept up to 16 PZDs simultaneously from the communication board, data consistency is assured.

Since a variety of different functions can be used to transfer PZDs simultaneously, data are overlayed in the drive. For example, the first PZD from PZD Receive and PZD Receive Broadcast are always interpreted as the same control word 1. For this reason, care should be taken to ensure that data are transferred in meaningful combinations.

Two CAN identifiers are required for the purpose of processing parameters, i.e. one CAN identifier for PKW Request (parameter request job to drive) and one CAN identifier for PKW Response (parameter response by drive). These assignments are made in CB parameters as shown in the following diagram:

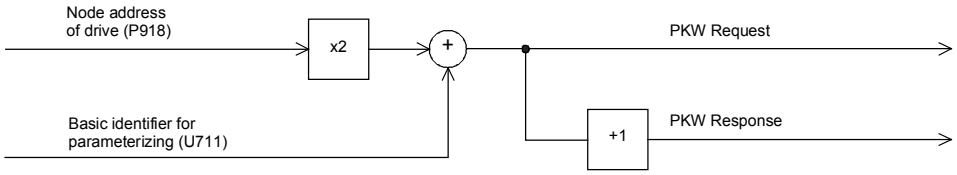

Example of PKW data exchange:

P918 = 1	This setting assigns identifier 300 to the parameter job (request)
U711 = 298	and identifier 301 to the parameter response.

Structure of a telegram for PKW data exchange:

The telegram consists of the following data words:

Identifier ID	Parameter identifier PKE	Parameter index IND	Parameter value 1 PWE1	Parameter value 2 PWE2

ID is the CAN identifier that is defined for the COB in question by parameterization.

PKE contains the request or response ID and the parameter number

Request or response ID		Parameter number PNU

Bit 0 to bit 10 contain the number of the parameter concerned. Bit 12 to bit 15 contain the request or response ID.

The index **IND** contains the value 0 for unindexed parameters, for indexed parameters it contains the corresponding index value. Bit15 also has a special function as the page select bit for parameter numbers greater than 1999.
The index value 255 means that the request concerns all indices of the parameter in question. For a change request, the parameter values must then be passed on for all indices of the parameter. Because a COB can only contain up to 4 data words (8 bytes) of net data, use of this request is only possible for parameters with (up to) 2 indices. In the other direction, the drive supplies all index values in the response telegram to a read request.

Details about the telegram structure can be found in Section 7.10.7, "Structure of request/response telegrams“.

Example of a PKW request:

Changing the parameter value of the indexed parameter P301.02 (in the RAM) to -95.00%.

The example telegram therefore contains the following values:

Request identifier	300_d	$012C_h$	For use of the IDs of the example above
Request code	7_d	7_h	"Change parameter value (array word)"
Parameter number	301_d	$012D_h$	=> PKE = $712D_h$
Index	2_d	0002_h	
Parameter value	9500_d	$DAE4_h$	

Using the CAN BusAnalyser++ from Steinbeis, the transmit data appear as follows (data field length = 8 bytes, low and high bytes are shown swapped round):

Identifier	Data field			
2C 01	2D 71	02 00	E4 DA	00 00
ID	PKE	IND	PWE1	

The following transfer function is also available:

PKW Request Broadcast
A parameter job (request) is processed simultaneously by all slaves on the bus. The node address is not used to generate the CAN identifier because this must be set identically on all slaves utilizing the PKW Request Broadcast function. This common identifier is set in CB parameter 9 (U719). The corresponding parameter response is made with the CAN identifier for PKW Response described above.

Notes regarding PKW transmission:

The length of the job and the response is always 4 words. Jobs which apply to all indices of a parameter (e.g. "Request all indices") are not possible.

As a general rule, the low-order byte (in words) or the low-order word (in double words) is transferred first. SIMOTRAS HD 6SG70 does not use double word parameters itself, these jobs can only be executed where access is available to technology board parameters (e.g. T400).

The CBC does not respond to a parameter request job until the drive data are available. This normally takes 20 ms. The response times will be longer only if change (write) jobs including storage of the value in the EEPROM are received from other sources (e.g. serial basic converter interface), resulting in a delay in job execution.

In certain system states (e.g. initialization states), parameter processing is greatly delayed or does not take place at all.

The master may not issue a new parameter request job until any current parameter job has been acknowledged.

7.10.3.2 Description of CBC with CANopen

7.10.3.2.1 Introduction to CANopen

CANopen is a standardized application for distributed, industrial automation systems based on CAN and the CAL communication standard. CANopen is a standard of CAN in Automation (CiA) and was in widespread use shortly after it became available.

CANopen can be regarded in Europe as the definitive standard for the implementation of industrial CAN-based system solutions.

CANopen is based on a so-called "communication profile" which specifies the underlying communication mechanisms and their definition [CiA DS-301].

The main types of device deployed for automating industrial systems, such as digital and analog input/output modules [CiA DS-401], drives [CiA DS-402], control panels [CiA DS-403], controllers [CiA DS-404], PLCs [CiA DS-405] or encoders [CiA DS-406], are described in so-called "device profiles". These profiles define the functionality of standard equipment of the relevant type.

A central componentof the CANopen standard is the definition of device functionality using an "Object Directory" (OD). This object directory is subdivided into two sections, one which contains general information about the device, such as identification, manufacturer's name, etc. and the communication parameters, and the other describing the scope of device functions. An entry ("object") in the object directory is identified by means of a 16-bit index and an 8-bit subindex.

The "application objects" of a device, such as input and output signals, device parameters, device functions or network variables, are made accessible in standardized form via the network by means of the entries in the object directory.

Similar to other field bus systems, CANopen employs two basic data transmission mechanisms: The rapid exchange of short process data via so-called "process data objects" (**PDO**s) and the accessing of entries in the object directory via so-called "service data objects“ (**SDO**s). Process data objects are generally transferred either event-oriented, cyclically or on request as broadcast objects without an additional protocol overhead. SDOs are used mainly to transmit parameters during the device configuring process and generally for the transmission of longer data areas.

A total of 8 bytes of data can be transferred in a PDO. The assignment between application objects and a PDO (transfer object) can be set by means of a structure definition ("PDO mapping") stored in the OD and is thus adaptable to the individual operating requirements of a device.

SDOs are transmitted as a confirmed data transfer with two CAN objects in each case between two network nodes. The relevant object directory entry is addressed through the specification of index and subindex. Messages of unrestricted length can be transferred in principle. The transmission of SDO messages involves an additional overhead.

Standardized, event-oriented, high priority alarm messages ("**Emergency Messages**“) are available for signaling device malfunctions.

The functionality required for the preparation and coordinated starting of a distributed automation system corresponds to the mechanisms defined under CAL Network Management (NMT); this also applies to the "**Node Guarding**" principle underpinning the cyclical node monitoring function.

Identifiers can be entered directly into the data structures of the object directory to assign CAN message identifiers to PDOs and SDOs; predefined identifiers can be used for simple system structures.

7.10.3.2.2 Functionality of CBC with CANopen

The CBC with CANopen supports only minimal boot-up as defined in communication profile CiaA DS-301 (Application Layer and Communication Profile).

Up to four Receive PDOs and four Transmit PDOs are available. Parameters U711 to U714 can be programmed to select the mapping and communication properties of the Receive PDOs and parameters U715 to U718 to set the mapping and communication properties of the Transmit PDOs.

Dynamic mapping, i.e. changing the assignment between the objects from the object directory and a PDO in operation, is not supported by the CBC. Transmission type and identifier of the communication objects (PDO, SDO, SYNC, EMCY and Node Guarding Object) can, however, be set via SDOs in operation. These settings override the settings of the CP parameters and are erased when the supply voltage is switched off.

One server SDO is available.

Another available communication object is the **SYNC object**. Using a synchronization message, the CAN master can synchronize the transmission and reception of PDOs for the whole network ("synchronous PDOs").

The EMCY object (**Emergency Object**) is implemented. This telegram is used to signal all faults and alarms generated in the SIMOTRAS HD system via the CAN Bus.

The network functionality is monitored via the **Node Guarding Telegram** with which the master addresses the slaves cyclically. Each slave must individually respond to this telegram within a parameterizable time frame.

If the master does not receive a response to its request, the communication link to the slave must be malfunctioning in some way (e.g. cable break, bus connector removed, etc.).

If the slave does not receive a Node Guarding Telegram from the master within a particular time period (**Life Time Event**), it can assume that there is error in the communication link. The reaction of the slave to this event can be parameterized in parameter U719.

Canopen modes **Velocity Mode** (speed control) and **Profile Torque Mode** (torque control), both in accordance with CiA DS-401 (Device Profile for Drives and Motion Control), and the manufacturer-specific **Current Mode** (current control) are implemented.

7.10.3.2.3 Requirements for operating the CBC with CANopen

To be able to operate the CBC with CANopen, the following two conditions must be fulfilled:

- SIMOTRAS HD firmware, V1.9 and later
- CBC firmware, V2.2 and later

To be able to operate the individual CANopen profiles, certain parameter settings must be made in the SIMOTRAS HD.

7.10.3.3 Diagnostic tools:

LED displays on the CBC (flashing LEDs indicate normal operation):

Red LED	Status of CBC
Yellow LED	Communication between SIMOTRAS HD and CBC
Green LED	Communication between CBC and CAN Bus

LED			Status
red	yellow	green	
flashing	flashing	flashing	Normal operation
flashing	off	on	CBC waiting for commencement of initialization by SIMOTRAS HD
flashing	on	off	CBC waiting for end of initialization by SIMOTRAS HD
flashing	flashing	off	No PZD data exchange via CAN Bus
flashing	on	on	CBC defective

Diagnostic parameter n732:

Indices i001 to i032 apply to a CBC as the first communication board; indices i033 to i064 apply to a CBC as the second communication board.

	Value	Meaning
n732.001 or n732.033	0	No fault Fault F080/fault value 5 is displayed under fault conditions: <u>Fault values for CAN layer 2:</u>
	1	Incorrect address on CAN Bus (P918 / slave address)
	2	Incorrect CAN identifier with PKW Request (U711)
	5	Incorrect CAN identifier with PKW Request-Broadcast (U719)
	7	Incorrect CAN identifier with PZD Receive (U712)
	13	Incorrect CAN identifier with PZD Transmit (U713)
	14	PZD transmit length = 0 (U714)
	15	PZD transmit length > 16 , i.e. too long (U714)
	20	Incorrect CAN identifier with PZD Receive-Broadcast (U716)
	21	Incorrect CAN identifier with PZD Receive-Multicast (U717)
	22	Incorrect CAN identifier with PZD Receive-Internode (U718)
	23	Invalid baud rate (U720)
	35	Incorrect CAN protocol type (U721)
	36	PKW Request-Broadcast (U719) without PKW Request (U711)
	48	Overlap between CAN identifier PKW and PKW Broadcast
	49	Overlap between CAN identifier PKW and PZD Receive
	50	Overlap between CAN identifier PKW and PZD Transmit
	51	Overlap between CAN identifier PKW and PZD Receive-Broadcast
	52	Overlap between CAN identifier PKW and PZD Receive-Multicast
	53	Overlap between CAN identifier PKW and PZD Receive-Internode
	54	Overlap between CAN identifier PKW Broadcast and PZD Receive
	55	Overlap between CAN identifier PKW Broadcast and PZD Transmit
	56	Overlap between CAN identifier PKW Broadcast and PZD Receive-Broadcast
	57	Overlap between CAN identifier PKW Broadcast and PZD Receive-Multicast
	58	Overlap between CAN identifier PKW Broadcast and PZD Receive-Internode
	59	Overlap between CAN identifier PZD Receive and PZD Transmit
	60	Overlap between CAN identifier PZD Receive and PZD Receive-Broadcast
	61	Overlap between CAN identifier PZD Receive and PZD Receive-Multicast
	62	Overlap between CAN identifier PZD Receive and PZD Receive-Internode
	63	Overlap between CAN identifier PZD Transmit and PZD Receive-Broadcast
	64	Overlap between CAN identifier PZD Transmit and PZD Receive-Multicast
	65	Overlap between CAN identifier PZD Transmit and PZD Receive Internode
	66	Overlap between CAN identifier PZD Receive-Broadcast and PZD Receive-Multicast
	67	Overlap between CAN identifier PZD Receive-Broadcast and PZD Receive-Internode
	68	Overlap between CAN identifier PZD Receive-Multicast and PZD Receive-Internode
		<u>Fault values for CANopen:</u>
	1	Incorrect bus address (P918)
	23	Invalid baud rate (U720)
	35	Incorrect CAN protocol type (U721)
	257	Invalid mapping of 1st Receive PDO (U711)
	258	Invalid transmission type of 1st Receive PDO (U711)
	273	Invalid mapping of 1st Transmit PDO (U715)
	274	Invalid transmission type of 1st Transmit PDO (U715)
	513	Invalid mapping of 2nd Receive PDO (U712)
	514	Invalid transmission type of 2nd Receive PDO (U712)
	529	Invalid mapping of 2nd Transmit PDO (U716)
	530	Invalid transmission type of 2nd Transmit PDO (U716)
	769	Invalid mapping of 3rd Receive PDO (U713)
	770	Invalid transmission type of 3rd Receive PDO (U713)
	785	Invalid mapping of 3rd Transmit PDO (U717)
	786	Invalid transmission type of 3rd Transmit PDO (U717)
	1025	Invalid mapping of 4th Receive PDO (U714)
	1026	Invalid transmission type of 4th Receive PDO (U714)
	1041	Invalid mapping of 4th Transmit PDO (U718)
	1042	Invalid transmission type of 4th Transmit PDO (U718)
	1092	Invalid Life Time Event or incorrect basic unit parameterized (U719)
n732.002 or n732.034		Number of correctly received PZD CAN telegrams since Power ON Irrelevant for CANopen
n732.003 or n732.035		Number of PZD telegrams lost since Power ON Telegrams will be lost if the CAN Bus master sends PZD telegrams faster than they can be processed by the slave. Irrelevant for CANopen

	Value	Meaning
n732.004 or n732.036		Counter of Bus Off states since Power ON (alarm A084)
n732.005 or n732.037		Counter of Error Warning states since Power ON (alarm A083)
n732.006 or n732.038		Status of the CAN controller
n732.007 or n732.039		Number of errors occurring during reception of PCD frames
n732.008 or n732.040		Type of error occurring during reception of PCD frames
n732.009 or n732.041		Value of error occurring during reception of PCD frames
n732.010 or n732.042		Number of correctly transmitted PZD CAN telegrams since Power ON Irrelevant for CANopen
n732.011 or n732.043		Number of errors during transmission of PZD telegrams PZD telegrams cannot be transmitted when the bus is overloaded Irrelevant for CANopen
n732.012 or n732.044		Type of error occurring during transmission of PCD frames
n732.013 or n732.045		Value of error occurring during transmission of PCD frames
n732.014 or n732.046		Number of correctly processed PKW requests and responses since Power ON Irrelevant for CANopen
n732.015 or n732.047		Number of PKW request processing errors, e.g. owing to bus overload or missing responses from CUD1 (see below for error type) Irrelevant for CANopen
n732.016 or n732.048	0 9 11 12	Type of PKW request processing error: No error Error transmitting the PKW response (while waiting for a free channel) Timeout waiting for the PKW response from the CUD1 Timeout waiting for a free channel (bus overload) Irrelevant for CANopen
n732.017 or n732.049		Value of error occurring while processing PKW requests
n732.018 or n732.050		Number of lost PKW requests Irrelevant for CANopen
n732.026 or n732.058		Software version of CBC (e.g. "12“ = version 1.2, see also r060)
n732.027 or n732.059		Software identifier (extended software version identifier, see also r065)
n732.028 or n732.060		Date of generation of CBC software Day (H byte) and month (L byte)
n732.029 or n732.061		Date of generation of CBC software Year

Fault and alarm messages:

Detailed information about fault messages can be found in Section 10.

Fault F080
An error occurred during initialization of the CBC board, e.g. incorrect setting of a CB parameter, incorrect bus address or defective board.

Fault F081
The heartbeat counter (counter on CBC) which is monitored by SIMOTRAS HD for "signs of life" from the board has not changed for at least 800 ms.

Fault F082
Failure of PZD telegrams or a fault in the transmission channel

Alarm A083 (Error Warning)
Errored telegrams are being received or sent and the error counter on the supplementary board has exceeded the alarm limit.
Errored telegrams are ignored. The data most recently transferred remain valid. If the errored telegrams contain process data, fault message F082 with fault value 10 may be activated as a function of the telegram failure time set in U722. No fault message is generated for PKW data.

Alarm A084 (Bus Off)
Errored telegrams are being received or sent and the error counter on the supplementary board has exceeded the fault limit.
Errored telegrams are ignored. The data most recently transferred remain valid. If the errored telegrams contain process data, fault message F082 with fault value 10 may be activated as a function of the telegram failure time set in U722. No fault message is generated for PKW data.

7.10.4 Procedure for starting up the SIMOLINK board (SLB)

1 Disconnect the power supply and insert adapter board (ADB) containing SLB in a location. Please remember to insert a board in location 2 before you use location 3. .

2 The SLBs must be connected up using fiber optics in such a manner as to avoid long distances between two units (max. 40m with plastic fiber optics and max. 300 m with glass fiber optics). Please also note that the transmitter (in center of SLB) on one unit is connected to the receiver (at corner of SLB) on the next unit. These connections must be made on all units until they are linked in a closed circuit.

3 The following are important communication parameters. Index 1 of each parameter is set for the 1st SIMOLINK board (1st SLB) and index 2 for the 2nd SIMOLINK board (2nd SLB) (the use of a 2nd SLB is planned for future software versions):

- U740 Node address (address 0 identifies the dispatcher)
  Node addresses must be assigned consecutively unless a SIMOLINK master is being used.
- U741 Telegram failure time (0 = deactivated)
- U742 Transmitter power
  The output of the fiber optic transmitter module can be set on each active bus node.
- U744 Reserved for SLB selection (leave at 0 setting)
- U745 Number of channels (telegrams) used per node
  The SLB with dispatcher function assigns the same number of channels to all nodes
- U746 Traffic cycle time

In contrast to converters of the SIMOVERT series, the line-synchronous SIMOTRAS HD converter cannot be synchronized with the cycle time of the SIMOLINK bus in order to minimize the data interchange time.
The user data in the telegrams are exchanged cyclically (6x per mains period, i.e. every 3.3 ms at 50 HZ) between the SIMOTRAS HD converter and the SLB, irrespective of the cycle time on the bus (U746). A shorter cycle time still means, however, that the data are transferred more quickly after they have been made available by the converter or more up-to-date information for the converter.

U745 and U746 together determine the number of addressable nodes (this can be checked with diagnostic parameter n748.4 in the converter with the dispatcher board).

$$\text{No. of addressable nodes} = \left(\frac{U746[\mu s] + 3.18\mu s}{6.36\mu s} - 2\right) * \frac{1}{U745}$$

The number of nodes serves only to check whether data can be exchanged with the values set in U745 and U746. These parameters must otherwise be corrected.

A maximum of 201 nodes (dispatcher and 200 transceivers) can be connected to the SIMOLINK bus. Node addresses 201 to 255 are reserved for special telegrams and others. Consequently, with 8 channels per node, a bus cycle can be a maximum of 6.4 ms in duration.

4 Process data are connected to the SIMOLINK board through assignment of the corresponding connectors and/or binectors to telegram addresses and channel numbers (see Section 8, Sheet Z122).

Example:

U749.01 = 0.2	means that the values of node 0 / channel 2 are read as word1 (K7001) and word2 (K7002)
U740.01 = 1 U751.01 = 32 U751.02 = 33	means that node 1 in channel 0 transmits status word 1 (K0032) as word1 and status word 2 (K0033) as word2

Changes to the settings of the receive data parameters do not take effect until the electronics power supply is switched on again.



WARNING

Changing parameters U740, U745, U746 and U749 causes re-initialization, resulting in an interruption in communication with all drives linked to the SIMOLINK bus.

SIMOLINK (**S**iemens **M**otion **L**ink) is a digital, serial data transmission protocol which uses fiber optics as a transmission medium. The SIMOLINK drive link has been developed to allow a fast, cyclic exchange of process data (control information, setpoints, status information and actual values) via a closed ring bus.
Parameter data cannot be transferred via SIMOLINK.

SIMOLINK consists of the following components:

SIMOLINK **Master**
Active bus node as interface to higher-level automation systems (e.g. SIMATIC M7 or SIMADYN)

SIMOLINK Board (**SLB**)
Active bus node as interface for drives on SIMOLINK

SIMOLINK **Switch**
Passive bus node with switching function between two SIMOLINK ring busses. The separating filter and concentrator are identical in terms of hardware, but perform different functions. Separating filters are used to reverse the signal flow, e.g. in order to link the nodes on one ring bus to another ring bus after the failure of their master. Concentrators allow ring segments to be star-connected to form a complete ring.

Fiber optic cables
Transmission medium between the SIMOLINK nodes. Glass or plastic fiber optic cables can be used. The permissible maximum distances between adjacent nodes in the ring differs depending on the type of fiber optic used (plastic: max 40m, glass: max. 300m).

SIMOLINK is a closed fiber optic ring. One of the nodes on the bus has a **dispatcher** function (SIMOLINK master or SLB parameterized as the dispatcher). This dispatcher node is identified by **node address 0** and controls communication on the bus. Using SYNC telegrams, it supplies the common system clock cycle for all nodes and sends telegrams in ascending sequence of telegram addresses and channel numbers in the task table. The **task table** contains all telegrams which are transmitted cyclically in normal data interchange.

When an SLB is employed as the dispatcher, the task table is configured solely on the basis of drive parameters. The following restrictions apply as compared to the use of a SIMOLINK master as the dispatcher:

Flexible address lists with gaps in address sequence are not allowed on the bus. Addresses are assigned consecutively to the nodes, starting with address 0.
The number of telegrams (channels) used per node is identical for all nodes.
It is not possible to use application-specific special data.

All other active bus nodes apart from the dispatcher are **transceivers**. These simply forward telegrams (with updated contents in some cases) along the bus.

Active bus nodes receive and/or send telegrams (SIMOLINK master, dispatcher, transceivers).
Passive bus nodes simply forward received telegrams along the bus without changing their contents (separating filters, concentrators).

A separate address is assigned to each active bus node; the dispatcher is always assigned node address 0.
A maximum of 8 telegrams can be transferred per active node. The number of telegrams used per node is a parameterizable quantity.
Telegrams are identified by the node address and distinguished by their channel number of between 0 and 7, with 2 data words transferred as user data in each telegram. The first channel number starts with 0 and is counted in ascending sequence.

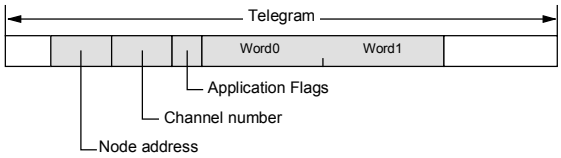

The assignment between connector values to be transferred and individual telegrams and channels is also parameterized (see Section 8, Sheet Z122).

Transmission of double-word connectors:
The values of double-word connectors can be transmitted in the first four channels (selected with U749.01 to U749.04 in the receive direction or with U751.01 to U751.08 in the transmission direction). In the receive direction, the values of any two adjacent connectors (K) are combined to form a double-word connector (KK) (e.g. K7001 and K7002 to KK7031). These double-word connectors can be connected to other function blocks in the usual way. For details of how to connect with double-word connectors, see Section 9.1, subsection, " The following rules apply to the selection of double-word connectors ".
In the transmission direction, a double-word connector is applied by entering the same double-word connector at two contiguous indices of selection parameter U751.
Examples:

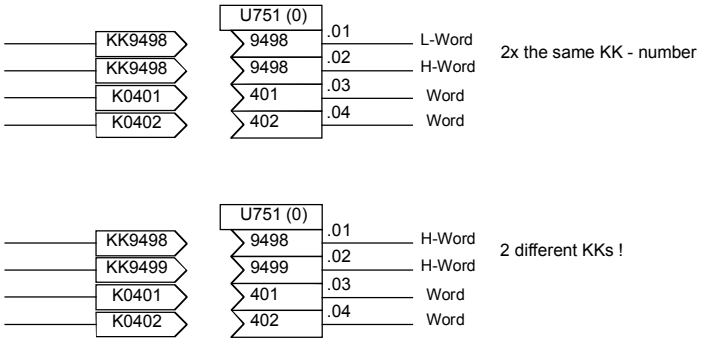

Apart from these data, a SIMOLINK master can also send **special telegrams** with application-specific data (addresses 201 to 204 and channel number 0). An SLB as dispatcher does not support these special telegrams.
If a transceiver stops receiving telegrams due to an interruption, it automatically transmits special telegram "Time Out“.

The transmission rate is **11 Mbits/s**. The data telegrams are transmitted in direct succession, followed by a SYNC telegram and a pause telegram, within one bus cycle. Transferring the data telegrams without pauses ensures a higher data throughput. At a data transmission rate of 11 Mbit/s, the transmission time for one telegram is 6.36μs.

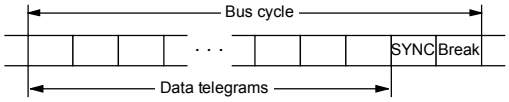

The assignment of telegrams to nodes is determined by the type of SIMOLINK application, i.e. peer-to-peer functionality or master-slave functionality.
When an SLB is configured as the dispatcher, only the peer-to-peer functionality is available.

Peer-to-peer functionality
In this mode, there is no defined logical master for distributing information. The drives have **equal status** in logical terms and exchange data with one another via the ring bus. One node (SLB) specifies the bus cycle in its dispatcher role to keep the transmission alive. All nodes receive and/or send user data. Dispatcher and transceivers can read any telegram, but may only write information in the telegrams specifically assigned to them (node address = address in telegram).

Master-slave functionality
A **logical master** (e.g. SIMATIC) supplies all nodes with information on the one hand and, on the other, specifies the bus clock cycle (dispatcher function). All other nodes behave as described above under peer-to-peer functionality, i.e. they receive and/or send user data, but are only permitted to read or write telegrams containing their address.
In contrast to peer-to-peer functionality, the restrictions described above (no gaps in address sequence, uniform number of used channels, no special data) do not apply. The master has its own 8 channels for transferring data, but can also use telegrams with the address and channel numbers of the transceivers for its data transmissions.

NOTE

An external 24V power supply to the SIMOLINK modules ensures that communication with the other bus nodes continues if a device fails.
However, this power supply does not prevent the short interruption in communication when the device is switched on again when establishing communication is forced.

7.10.5 Procedure for starting up expansion boards (EB1 and EB2)

1. Remove connector X480 from the EB1 board for safety reasons. A short circuit could otherwise occur should the signal direction of the bidirectional binary inputs/outputs be incorrectly parameterized (see also point 3).
   This risk of short circuits does not exist on EB2 boards.

2. The analog inputs on the EB1 can be used either as current or voltage inputs, the mode being selected by setting **jumpers** (X486, X487, X488) appropriately (see Function Diagrams, Section 8). The same applies to EB2 (X498); on this board, the analog output can also be configured as a current or voltage source (X499).

3. Parameterize the desired functions for the inputs and outputs (see Function Diagrams, Section 8).
   If you wish to operate a bidirectional binary input/output on an EB1 as an input, please note that the output circuit must be deactivated in the corresponding parameter (e.g. U769.01=0). A short circuit will otherwise occur if the signal levels of the external input and output signals are opposed.
   Switch off the device.

4. With the power supply disconnected, insert the adapter board with expansion board in a location. Please remember to insert a board in location 2 before you use location 3.

5. EB1 boards only: Plug connector X480 back into board.

Expansion boards EB1 and EB2 expand the range of terminals on the basic converter. A total of 2 EB1 boards and 2 EB2 boards may be installed in one SIMOTRAS HD 6SG70. The EB1 and/or EB2 are plugged into adapter (carrier) boards (ADB). 2 boards may be mounted on each ADB.

The EB1 provides the following expansion terminals:

- 3 binary inputs
- 4 bidirectional binary inputs/outputs
- 1 analog input for differential signal (current or voltage input)
- 2 analog inputs (single ended), can also be used as binary inputs
- 2 analog outputs
- 1 connector for external 24 V voltage supply to binary outputs

The EB2 provides the following expansion terminals:

- 2 binary inputs
- 1 connector for external 24 V voltage supply to binary outputs
- 1 relay output with changeover contacts
- 3 relay outputs with NO contacts
- 1 analog input for differential signal (current or voltage input)
- 1 analog output (current or voltage output)

For further details, see Section 8, function diagrams for expansion boards EB1 and EB2.

7.10.6 Procedure for starting up the pulse encoder board (SBP)

1 Set the switches (for encoder supply and bus terminating resistors) on the SBP board:
If one pulse encoder is connected to one SBP board, then the three switches for bus terminating resistors must be switched to ON.
If one pulse encoder is connected to several SBP boards, then the three switches for bus terminating resistors must be switched to ON only on the last SBP.
The fourth switch connects and disconnects the supply voltage for the encoder. **(Caution: Switch open means supply voltage connected)**

2 Disconnect power supply and insert adapter with board into location. Please remember to insert a board in location 2 before you use location 3.

3 Connect the terminals on strips X400, X401 on the pulse encoder board to the appropriate terminals on the encoder (for circuit example, refer to operating instructions for pulse encoder board). When connecting unipolar signals, one earth connection for all signals on terminal 75 (CTRL-) is sufficient. However, with very long cables or where there are high levels of radiated noise, it is advisable to bridge terminals 69, 71 and 75 (A-, B- and CTRL-) and connect them to the encoder ground. The zero track of the pulse encoder is not evaluated by SIMOTRAS HD and need not therefore be connected.
The terminals designated coarse pulse1, coarse pulse2 and fine pulse2 can be used as digital inputs for any function (see Function Diagrams in Section 8, Sheet Z120)

4 Please make the following settings:

- U790 Voltage level of inputs
  - 0: HTL unipolar
  - 1: TTL unipolar
  - 2: HTL differential input
  - 3: TTL/RS422 differential input
- U791 Level of encoder supply
  - 0: 5V voltage supply
  - 1: 15V voltage supply
- U792 Pulse encoder resolution
- U793 Type of pulse encoder
  - 0: Encoder with A/B track (two tracks displaced by 90 degrees)
  - 1: Encoder with separate forward and reverse track
- U794 Reference speed

(For further details, see Section 11, description of parameters U790- U794)

The pulse encoder board SBP (**S**ensor **B**oard **P**ulse) supports commercially available pulse encoders with pulse frequencies up to 410kHz. The voltage level of the encoder signals can be parameterized. TTL or HTL level pulses, bipolar or unipolar, can be used.

A voltage supply for 5V and 15V encoders is provided on the board.

Evaluation of a temperature sensor is not supported on SIMOTRAS HD 6SG70 converters.

7.10.7 Structure of request/response telegrams

There is no basic difference between the useful data area in the request and response telegrams for PROFIBUS and CAN Bus. There are differences, for example, in the protocol frame and in the sequence in which H and L bytes are transmitted. The structures shown here are those of a SIMOTRAS HD, i.e. the values are displayed in the same way as they would be for parameters n733 and n735, for example. The structure of the protocol frame and the transmission sequence of bytes are therefore described where necessary in the sections containing the start-up description for the appropriate board.

Each request and each response basically comprises three areas apart from the telegram frame with header and trailer:



The **parameter identifier** (PKE) contains a request or response identifier (i.e. type of request or response) and the number of the addressed parameter. The spontaneous signaling bit SPM (bit11) is not used on the SIMOTRAS HD master.

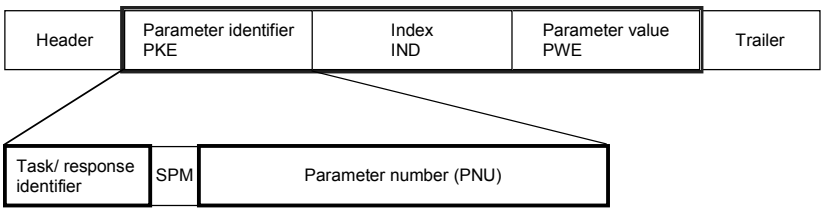

Bits 0 to 10 contain the number of the parameter specified in the request.

Owing to the length restriction of the bit field (11 bits), a **parameter number** (PNU) higher than 1999 must be converted to another code for use in the parameter identifier; the **Page Select Bit** in the index is used for this purpose:

Parameter area	Displayed number	Input on OP1S	PNU in parameter identifier	Page Select Bit (index bit 15)
Basic unit	**P**xxx, **r**xxx	0 - 999	0 - 999	0
	Uxxx, **n**xxx	2000 - 2999	0 - 999	1
Technology board	**H**xxx, **d**xxx	1000 - 1999	1000 - 1999	0
	Lxxx, **c**xxx	3000 - 3999	1000 - 1999	1

In the case of a request, for example, which specifies parameter U280 (2280), therefore, PNU = 280 must be entered in the parameter identifier and bit 15 set in the index.

Bits 12 to 15 contain the **request identifier** or the associated **response identifier** as shown in the following list:

Request identifier	Meaning	**Response identifier**	
		positive	negative
0	No request	0	7 or 8
1	Request parameter value (word or double word)	1 or 2	
2	Modify parameter value (word)	1	
3	Modify parameter value (double word)	2	
4	Request descriptive element	3	
5	Reserved	-	
6	Request parameter value (array) (word or double word)	4 or 5	
7	Modify parameter value (array - word)	4	
8	Modify parameter value (array-double word)	5	
9	Request number of array elements	6	
10	Reserved	-	
11	Modify parameter value (array-double word) and store in EEPROM	5	
12	Modify parameter value (array-word) and store in EEPROM	4	
13	Modify parameter value (double word) and store in EEPROM	2	
14	Modify parameter value (word) and store in EEPROM	1	
15	Request text	15	

If the drive has been unable to process the request, it does not return the associated response identifier, but **error identifier** 7 (or 8) instead.
In this case, an error code defining the error in more detail as shown in the following list is returned as a parameter value:

Error code	Meaning	
0	Illegal parameter number (PNU)	No PNU specified
1	Parameter value cannot be modified	Visualization parameter
2	Lower or upper value limit violated	
3	Faulty subindex	
4	Parameter is not indexed (no array)	
5	Incorrect data type	
6	Parameter value can only be reset	
7	Descriptive element cannot be modified	
8	PPO Write (acc. to "Information Report") is not available	
9	Parameter description is not available	
10	Incorrect access level	
11	No parameterizing enable (P927)	
12	Keyword missing	Key parameter P051 incorrectly set
13	Text cannot be read cyclically	
15	No text	
16	PPO Write missing	
17	Incorrect operating state	
19	Value cannot be read cyclically	
101	Parameter number currently deactivated	
102	Channel not wide enough	
103	PKW number incorrect	Applies only to serial interfaces

Error code	Meaning	
104	Illegal parameter value	Applies to BiCo selection parameters
105	Indexed parameter	
106	Request not implemented in drive	
107	Text cannot be modified	
108	Incorrect number of parameter values	Applies to "Change all indices" request

The **index** IND contains a "0" for non-indexed parameters; a 8-bit long index value is entered (in the low-order byte) for indexed parameters.
Bit 15 (Page Select bit) has a special function. This is used to identify parameter numbers higher than 1999 (see above for details of recoding parameter numbers).
Exception: In the case of cyclical PROFIBUS services, the L and H byte sequence is reversed (see "Start-up of PROFIBUS boards").

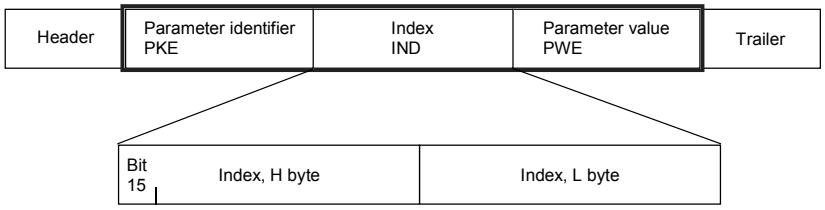

An index value of 255 means that the request applies to all indices of the relevant parameter. In the case of a modification request, the parameter values for all indices of the parameter must be transferred. Conversely, the drive supplies all index values in its response to a read request.

The **parameter value** PWE is treated like a double word (PWE1 and PWE2). The high word is set to 0 when a single word is transferred.

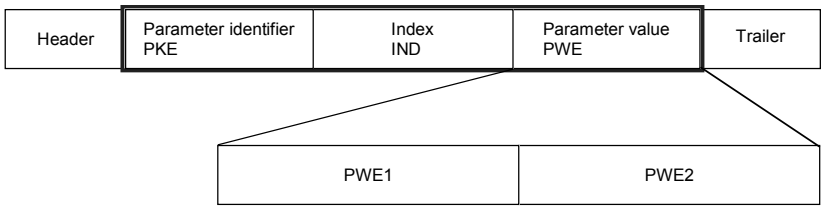

7.10.8 Transmission of double-word connectors for technology and communication modules

In the receive direction, the values of two adjacent connectors (K) are combined to form a single double-word connector (KK) (e.g. K3002 and K3003 to KK3032). These double-word connectors can themselves be connected to other function blocks in the usual way. For details of how to connect double-word connectors, see Section 9.1, subsection, " The following rules apply to the selection of double-word connectors ".
In the transmit direction, a double-word connector is applied by entering the same double-word connector in two contiguous indices of the selection parameter.

Example:

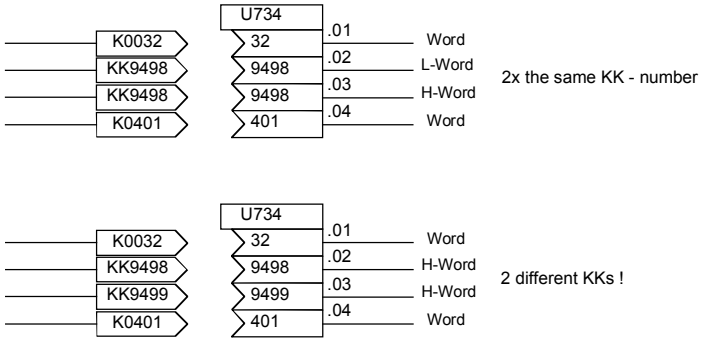

8 Function diagrams

General

Page

Key to symbols ... 8-5

Basic functions

G101 Hardware configuration ... 8-6

Inputs and outputs

G110 Binary inputs terminals 36 to 39 (CUD1) ... 8-7
G111 Binary inputs terminals 40 to 43 (CUD2) ... 8-8
G112 Binary outputs terminals 46/47 and 48/54 (CUD1) ... 8-9
Binary outputs terminals 50/51 and 52/53 (CUD2) ... 8-9
Relay output terminals 109/110 ... 8-9
G113 Analog inputs terminals 4/5, 6/7 (CUD1), and 103/104 ... 8-10
G114 Analog inputs terminals 8/9 and 10/11 (CUD2) ... 8-11
G115 Analog outputs terminals 12/13, 14/15, and 16/17 (CUD1) ... 8-12
G116 Analog outputs terminals 18/19 and 20/21 (CUD2) ... 8-13
G117 Control inputs terminals 71 to 75 ... 8-14
G118 Control inputs terminals 76 to 79 ... 8-15
G119 Control outputs terminals 81 to 94 ... 8-16

Setpoint generation

G120 Fixed values ... 8-17
Fixed control bits ... 8-17
Constant fixed values and control bits ... 8-17
G121 Connector and binector displays ... 8-18
G124 Connector selector switch ... 8-19
G125 Evaluation of a 4-step master switch ... 8-20
G126 Motorized potentiometer ... 8-21
G127 Fixed setpoint ... 8-22
G128 Oscillation / square-wave generator ... 8-23
G129 Inching setpoint ... 8-24
G130 Crawling setpoint / terminal 37 ... 8-25
G135 Setpoint processing ... 8-26
G136 Ramp-function generator (1) ... 8-27
G137 Ramp-function generator (2) ... 8-28

Internal control

G140 Brake control ... 8-29

Actual speed value

G145 Pulse generator evaluation ... 8-30

Controllers

G150 Starting pulse - speed controller ... 8-31
G151 Speed controller (1) ... 8-32
G152 Speed controller (2) ... 8-33
G153 Friction compensation ... 8-34
Compensation of moment of inertia (dv/dt injection) ... 8-34
G160 Torque limitation, speed limit controller ... 8-35
G161 Current limitation ... 8-36
G162 Closed-loop current control ... 8-37
G163 Auto-reversing stage, gating unit ... 8-38

Serial interfaces

G169 Serial interfaces: connector-type converters ... 8-39
G170 USS interface 1 (PMU) ... 8-40
G171 USS interface 2 (CUD1) ... 8-41
G172 USS interface 3 (CUD2) ... 8-42
G173 Peer-to-peer interface 2 (CUD1) ... 8-43
G174 Peer-to-peer interface 3 (CUD2) ... 8-44

Page

Program structure
G175 Data sets ... 8-45

Control words, status words
G180 Control word 1 ... 8-46
G181 Control word 2 ... 8-47
G182 Status word 1 ... 8-48
G183 Status word 2 ... 8-49

Miscellaneous
G185 Temperature sensor inputs (CUD2) ... 8-50
G186 Binary inputs, terminals 211 to 214 (CUD2) ... 8-51
G187 Messages (1) ... 8-52
G188 Messages (2) ... 8-53
G189 Fault memory ... 8-54
G195 Paralleling interface ... 8-55

Freely assignable function blocks (technology software S00)

B100 Table of contents ... 8-56
B101 Startup of the freely assignable function blocks ... 8-57

Monitoring
B110 Voltage monitor for electronics power supply ... 8-58

Fixed values
B110 100 Fixed values ... 8-58

Alarm, fault messages
B115 32 Fault message triggers ... 8-59
8 Alarm message triggers ... 8-59

Connector / binector converters
B120 3 Connector / binector converters ... 8-60
B121 3 Binector / connector converters ... 8-61

Mathematical functions
B125 15 Adders / subtractors ... 8-62
4 Sign inverters ... 8-62
2 Switchable sign inverters ... 8-62
B130 12 Multipliers ... 8-63
B131 6 Dividers ... 8-64
3 High-resolution multipliers / dividers ... 8-64
B135 4 Absolute-value generators with filter ... 8-66

Limiters, limit-value monitors
B134 3 Limiters ... 8-65
B135 3 Limiters ... 8-66
B136 3 Limit-value monitors with filter ... 8-67
B137 4 Limit-value monitors without filter ... 8-68
B138 3 Limit-value monitors without filter ... 8-69

Processing of connectors
B139 4 Averagers ... 8-70
B140 4 Maximum selections ... 8-71
4 Minimum selections ... 8-71
B145 2 Tracking / storage elements ... 8-72
2 Connector memories ... 8-72
B150 10 Connector changeover switches ... 8-73

High-resolution blocks
B151 2 limit-value monitors (for double connectors) ... 8-74
2 connector-type converters ... 8-74
2 adders/subtractors (for double connectors) ... 8-74

Page

Position/positional deviation acquisition, Root extractor
B152 1 Position/positional deviation acquisition ... 8-75
B153 1 Root extractor ... 8-76

Control elements
B155 3 Integrators ... 8-77
3 DT1 elements ... 8-77
B156 4 Derivative / delay elements (LEAD / LAG blocks) ... 8-78
B157 4 Derivative / delay elements (LEAD / LAG blocks) ... 8-79
B158 2 Derivative / delay elements (LEAD / LAG blocks) ... 8-80

Characteristics
B160 9 Characteristic blocks ... 8-81
B161 3 Dead zones ... 8-82
1 Setpoint branching ... 8-82

Ramp-function generator
B165 1 Simple ramp-function generator ... 8-83

Controllers
B170 1 Technology controller ... 8-84
B180... B189 10 PI controllers ... 8-85...94

Velocity / speed calculators, variable torque
B190 1 Velocity / speed calculator ... 8-95
1 Speed / velocity calculator ... 8-95
B191 1 Calculation variable inertia ... 8-96

Multiplexers for connectors
B195 3 Multiplexer ... 8-97

Counter
B196 1 16-bit software counter ... 8-98

Logical functions
B200 2 Decoders / demultiplexers, binary to 1 of 8 ... 8-99
B205 28 AND elements with 3 inputs each ... 8-100
B206 20 OR elements with 3 inputs each ... 8-101
4 EXCLUSIVE OR elements with 2 inputs each ... 8-101
B207 16 Inverters ... 8-102
12 NAND elements with 3 inputs each ... 8-102
B210 14 RS flipflops ... 8-103
B211 4 D flipflops ... 8-104
B215 6 Timers (0.000...60.000s) ... 8-105
B216 4 Timers (0.00...600.00s) ... 8-106
5 Binary signal selector switches ... 8-106

Page

Optional supplementary boards

Z100 Table of contents ... 8-107
Z110 Data exchange with a technology board (TB) or the 1st communications board (CB) ... 8-108
Z111 Data exchange with the 2nd communications board (CB) ... 8-109
Z112 1st EB1: Analog inputs ... 8-110
Z113 1st EB1: Analog outputs ... 8-111
Z114 1st EB1: 4 bidirectional inputs- / outputs, 3 digital inputs ... 8-112
Z115 2nd EB1: Analog inputs ... 8-113
Z116 2nd EB1: Analog outputs ... 8-114
Z117 2nd EB1: 4 bidirectional inputs- / outputs, 3 digital inputs ... 8-115
Z118 1st EB2: Analog input, Analog output, 2 digital inputs, 4 relay outputs ... 8-116
Z119 2nd EB2: Analog input, Analog output, 2 digital inputs, 4 relay outputs ... 8-117
Z120 SBP pulse encoder evaluation ... 8-118
Z121 SIMOLINK board: Configuration, diagnosis ... 8-119
Z122 SIMOLINK board: Receiving, transmitting ... 8-120
Z123 OP1S operator panel ... 8-121
Z124 Interfaces: connector-type converters ... 8-122
Z130 SCB1 with SCI1 as slave 1: binary inputs ... 8-123
Z131 SCB1 with SCI1 as slave 2: binary inputs ... 8-124
Z135 SCB1 with SCI1 as slave 1: binary outputs ... 8-125
Z136 SCB1 with SCI1 as slave 2: binary outputs ... 8-126
Z140 SCB1 with SCI2 as slave 1: binary inputs ... 8-127
Z141 SCB1 with SCI2 as slave 2: binary inputs ... 8-128
Z145 SCB1 with SCI2 as slave 1: binary outputs ... 8-129
Z146 SCB1 with SCI2 as slave 2: binary outputs ... 8-130
Z150 SCB1 with SCI1 as slave 1: analog inputs ... 8-131
Z151 SCB1 with SCI1 as slave 2: analog inputs ... 8-132
Z155 SCB1 with SCI1 as slave 1: analog outputs ... 8-133
Z156 SCB1 with SCI1 as slave 2: analog outputs ... 8-134

Drive-specific (crane) control (see also Section 6.1)

K1 Binary inputs, terminals 36 to 39 ... 8-138
K2 Control inputs terminals 71 to 75 ... 8-139
K3 Control inputs terminals 76 to 79 ... 8-140
K4 Control word 1 ... 8-141
K5 Control word 2 ... 8-142
K6 Transmit data ... 8-143
K7 Control outputs ... 8-144
K8 Enable, overload lifting gear ... 8-145
K9 Travel command, electrical stop, overtemperature ... 8-146
K10 Brake control ... 8-147
K11 Enable brake, enable ramp-function generator, starting aid limit switch ... 8-148
K12 Setpoint processing ... 8-149
K13 Setpoint selection ... 8-150
K14 Setpoint reduction on reaching a pre-limit switch ... 8-151
K15 Ramp-down monitoring ... 8-152
K16 Brake monitoring ... 8-153
K17 Fault acknowledgement, high-speed step ... 8-154
K18 Limit-value monitor ... 8-155

1	2	3	4	5	6	7	8

Key to symbols (see also Section 9.1)

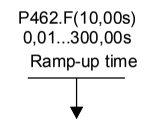

Setting parameter
Factory setting in parentheses
".F"= parameter in a function parameter set
0.00...300.00s = setting range



Display parameter
Parameter number = r045
.02 = index 2 of parameter

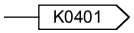

Connector
(freely connectable 16-bit value)

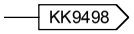

Double-word connector
(freely connectable 32-bit value)

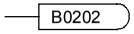

Binector
(freely connectable binary signal)

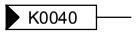

Connector assigned to a fixed quantity
(i.e. not optional)

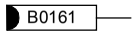

Binector assigned to a fixed quantity
(i.e. not optional)



Identifier for a freely assignable
function block
(Number of function block)

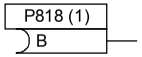

Selection of a binector
Factory setting in parentheses
Setting range = all binector numbers
Selected binector can be specified in symbol

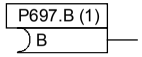

Selection of a binector
Factory setting in parentheses
".B" = Parameter in BICO data set
Setting range = all binary numbers
Selected binector can be specified in symbol

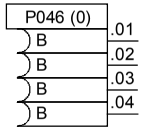

Selection of binectors via "indexed" parameter
Factory setting in parentheses
Setting range = all binector numbers
Selected binectors for each index can be specified

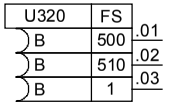

Selection of binectors via "indexed" parameter
Factory settings differ for each index
Setting range = all binector numbers
Selected binectors for each index can be specified in symbol

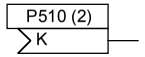

Selection of a connector
Factory setting in parentheses
Setting range = all binector numbers
Selected connector can be specified in symbol

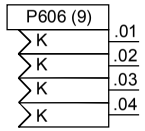

Selection of connectors via "indexed" parameter
Factory setting in parentheses
Setting range = all connector numbers
Selected connectors for each index
can be specified in symbol

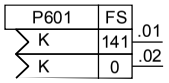

Selection of connectors via "indexed" parameter
Factory settings differ for each index
Setting range = all connector numbers
Selected connectors for each index
can be specified in symbol

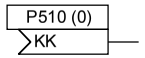

Selection of a double-word connector
Factory setting in parentheses
Setting range = all connector numbers
Selected connector can be specified in symbol

[G152.1]

Reference to another sheet in function diagrams, destination symbol
[Sheet.Column]

Selection of double-word connectors:

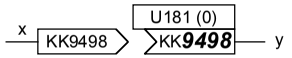

y - LOW word = LOW word of x (KK9498)
y - HIGH word = HIGH word of x (KK9498)

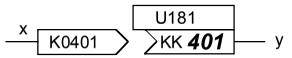

y - LOW word = 0
y - HIGH word = x (K0401)

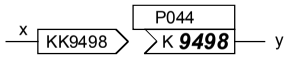

y (Word) = HIGH word of x (KK9498)

Basic functions Sheets G100 to G200

Sheet G101 Hardware configuration

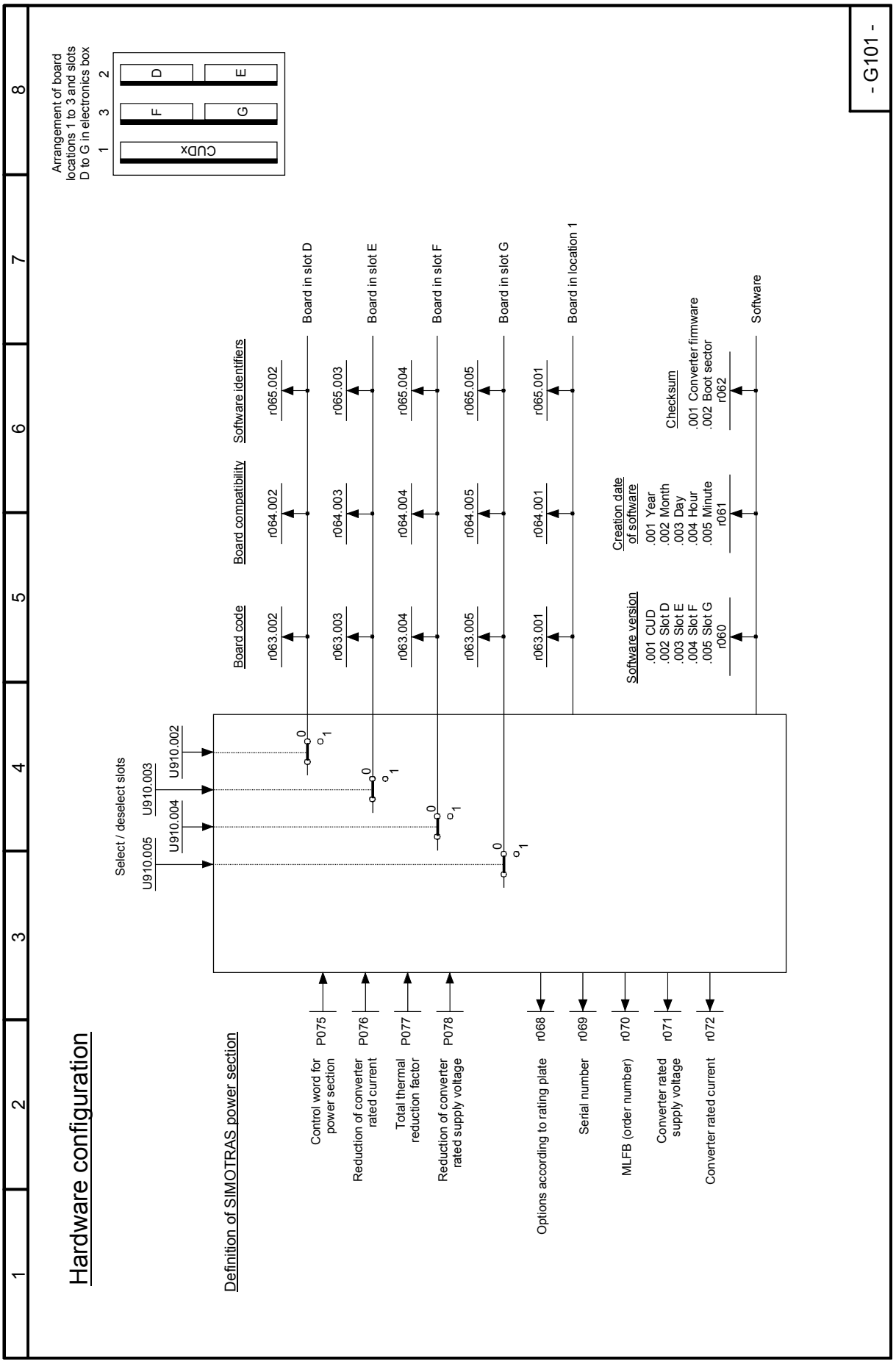

Sheet G110 Binary inputs terminals 36 to 39

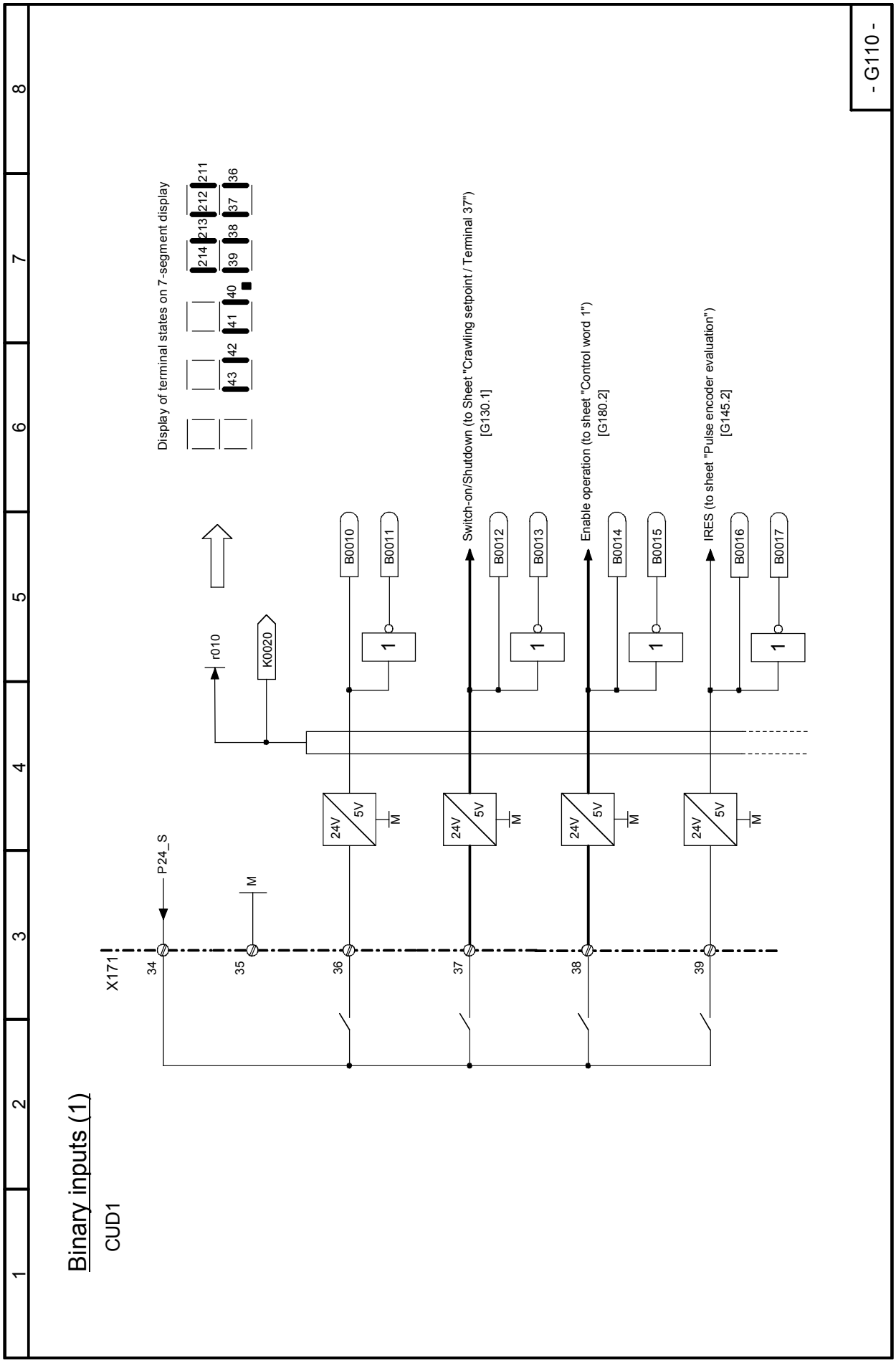

Sheet G111 Binary inputs terminals 40 to 43

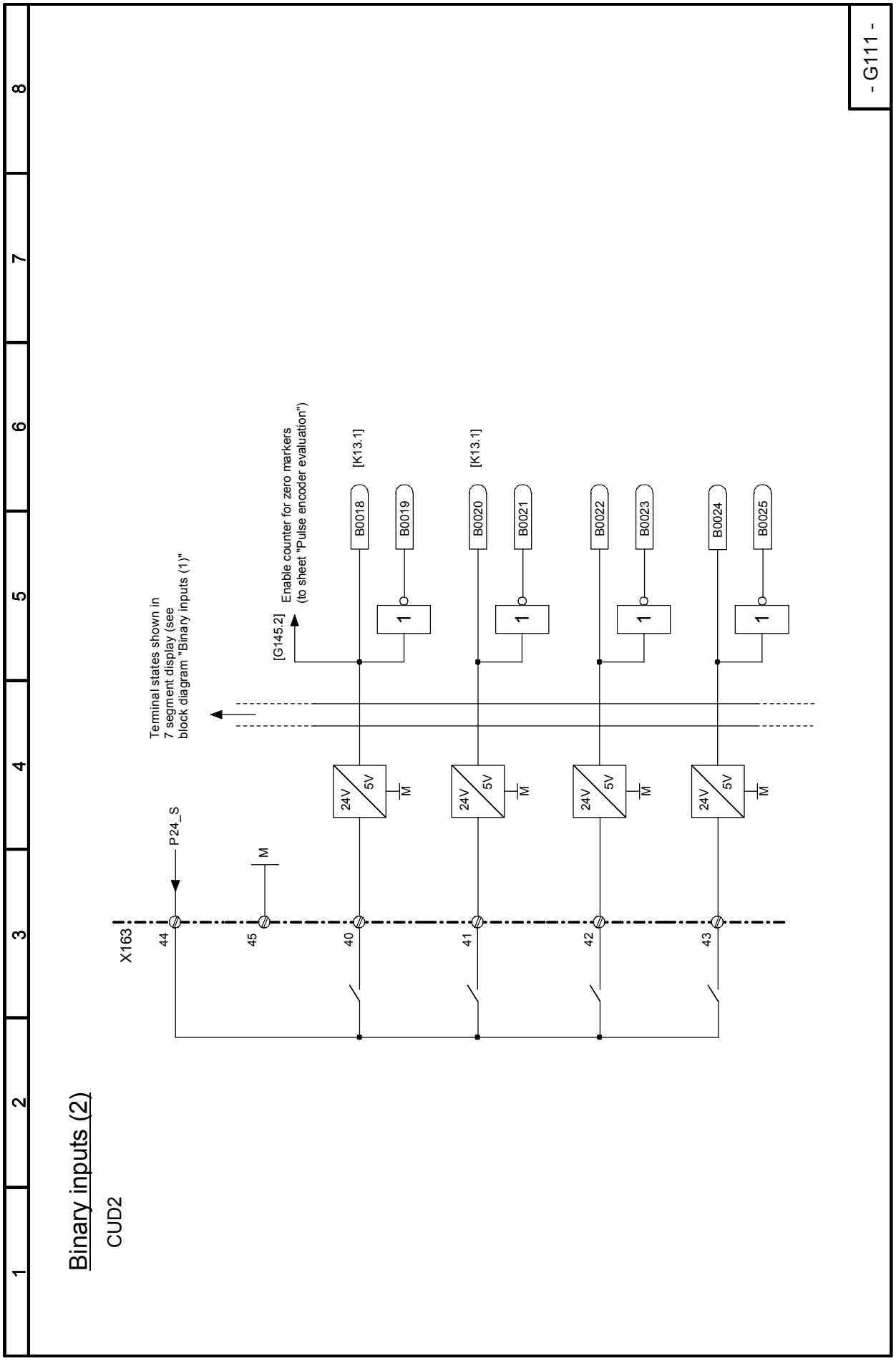

Sheet G112 Binary outputs terminals 46/47, 48/54, 50/51 and 52/53 Relay output terminals 109/110

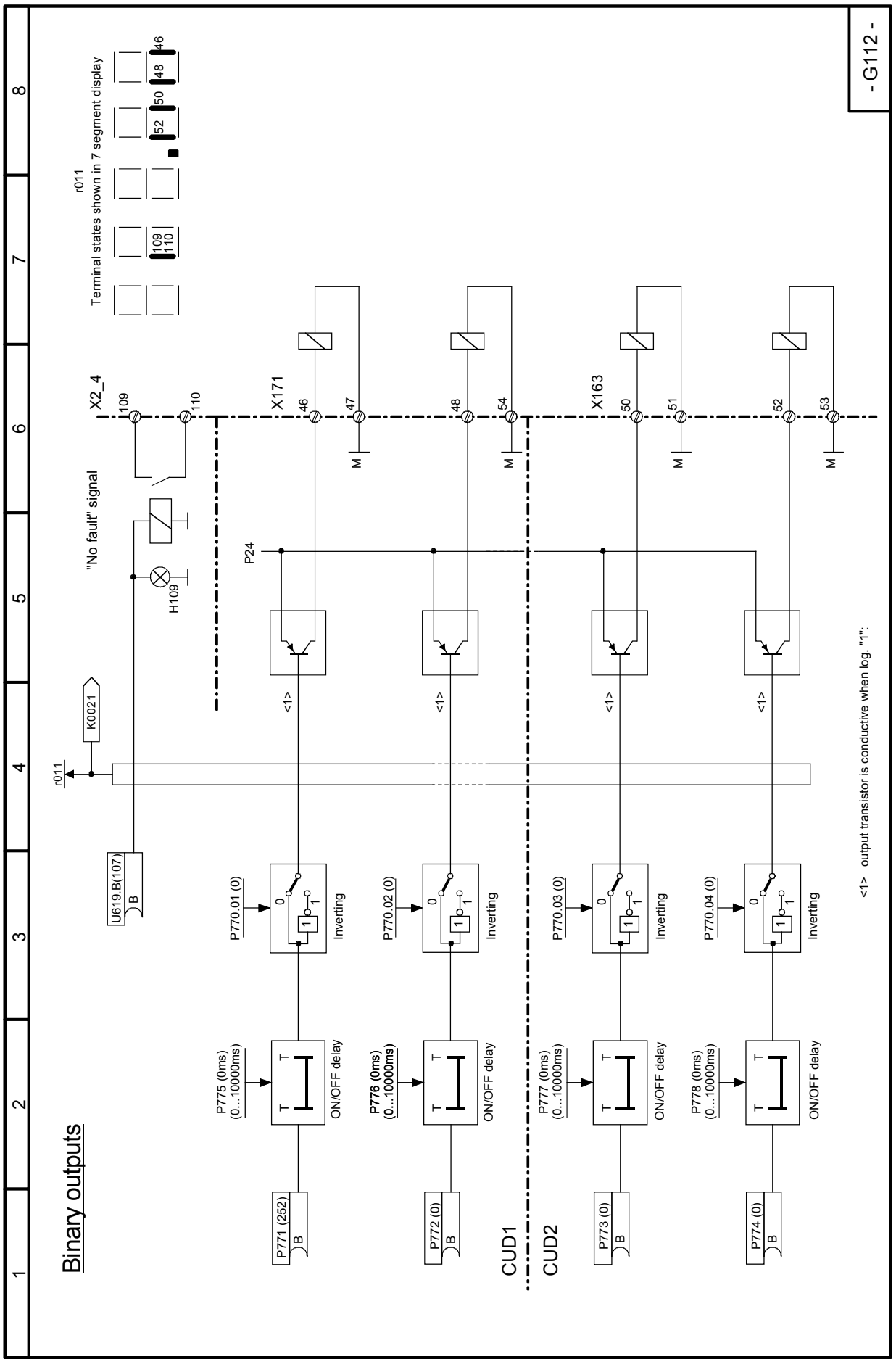

Sheet G113 Analog inputs terminals 4/5, 6/7, and 103/104

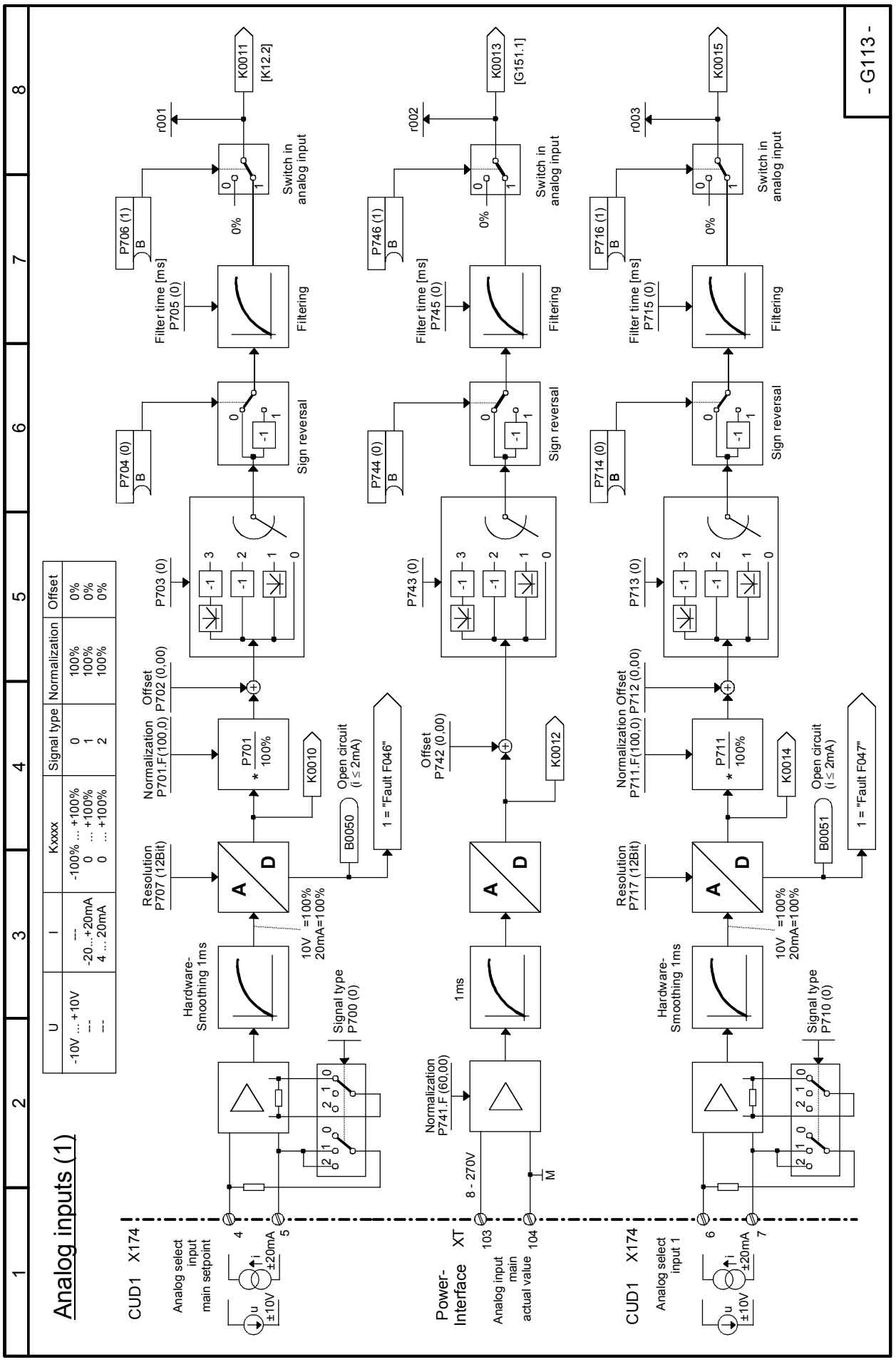

Sheet G114 Analog inputs terminals 8/9 and 10/11

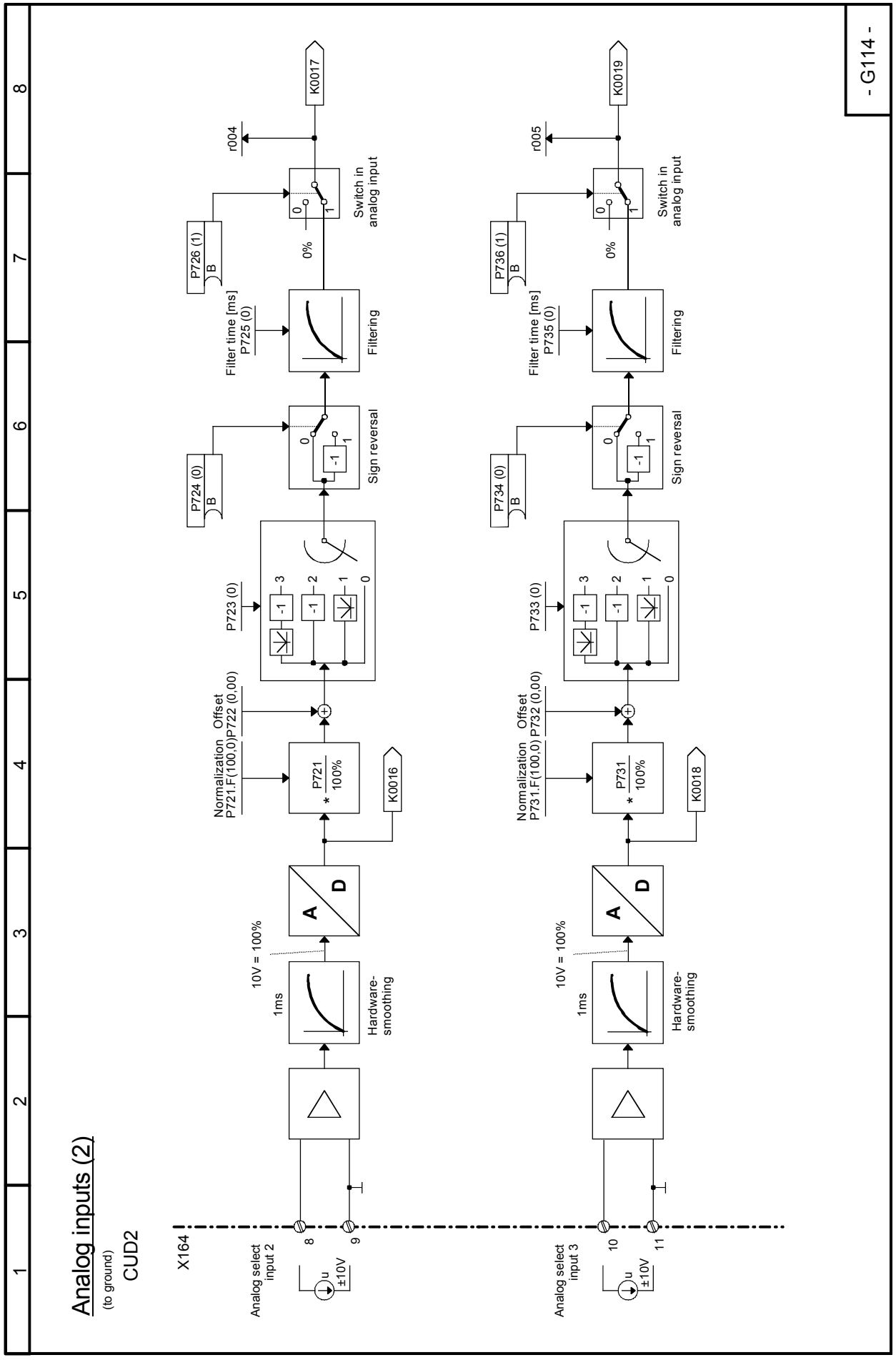

Sheet G115 Analog outputs terminals 12/13, 14/15, and 16/17

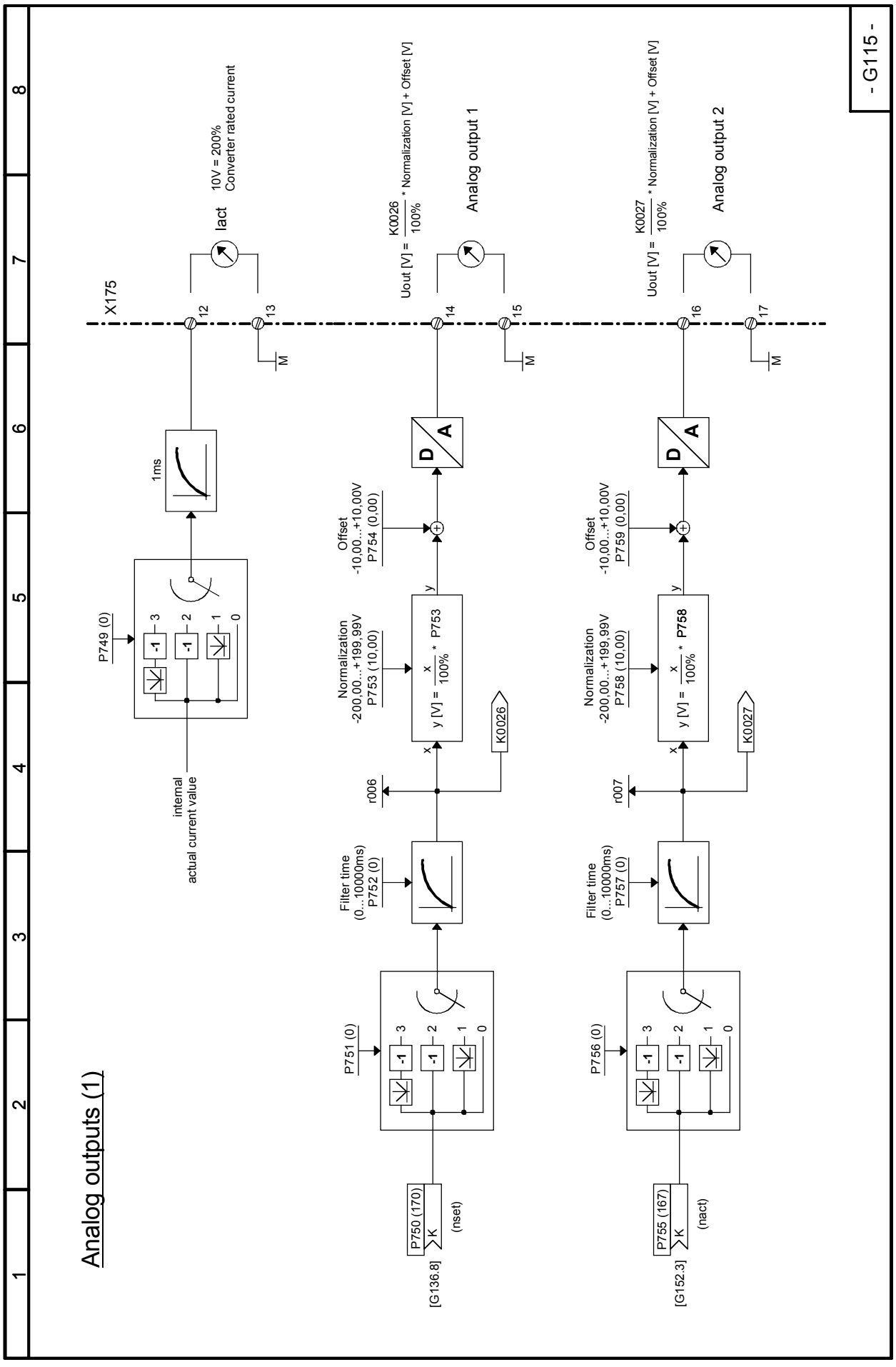

Sheet G116 Analog outputs terminals 18/19 and 20/21

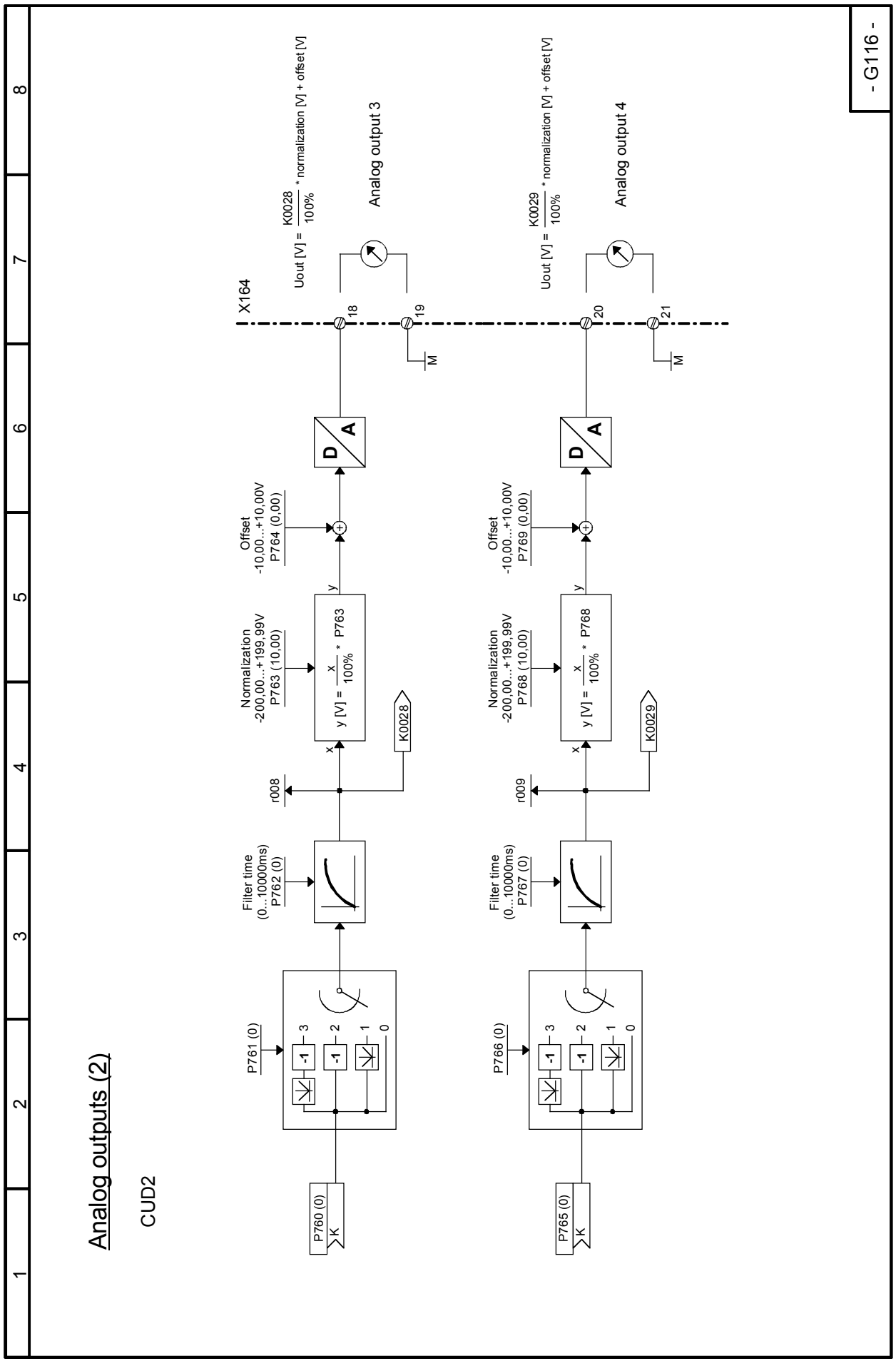

Sheet G117 Control inputs terminals 71 to 75

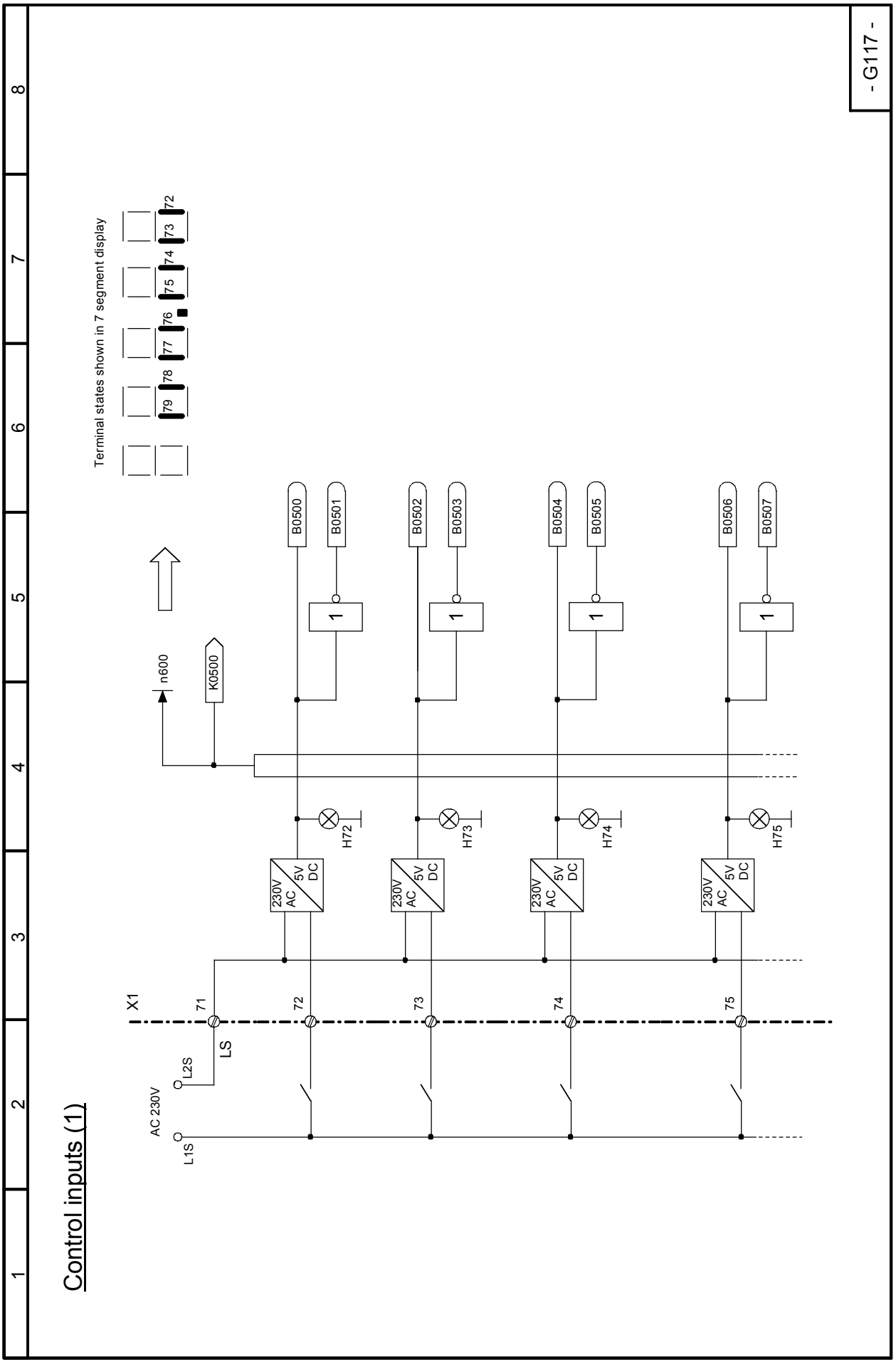

Sheet G118 Control inputs terminals 76 to 79

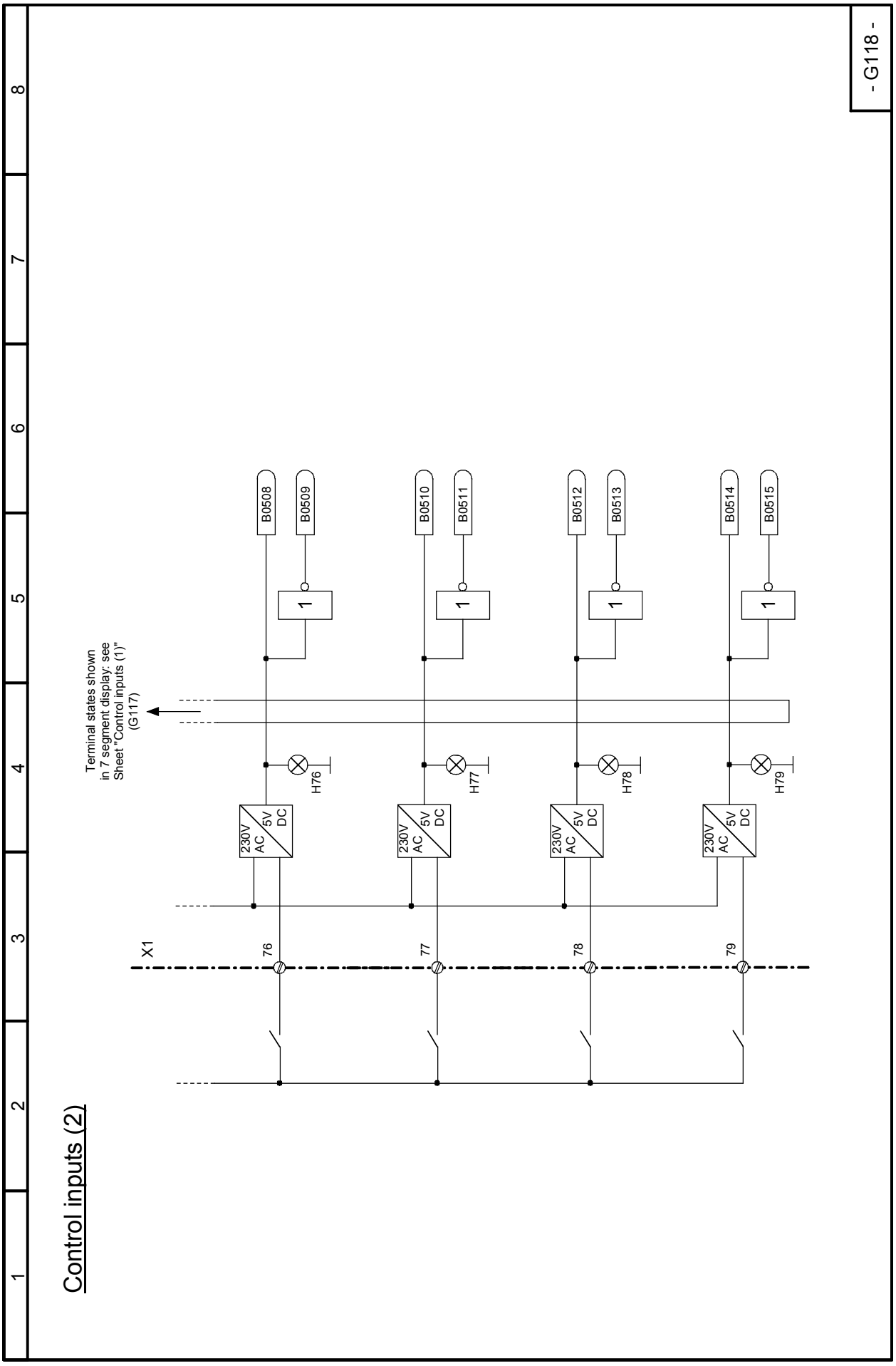

Sheet G119 Control outputs terminals 81 to 94

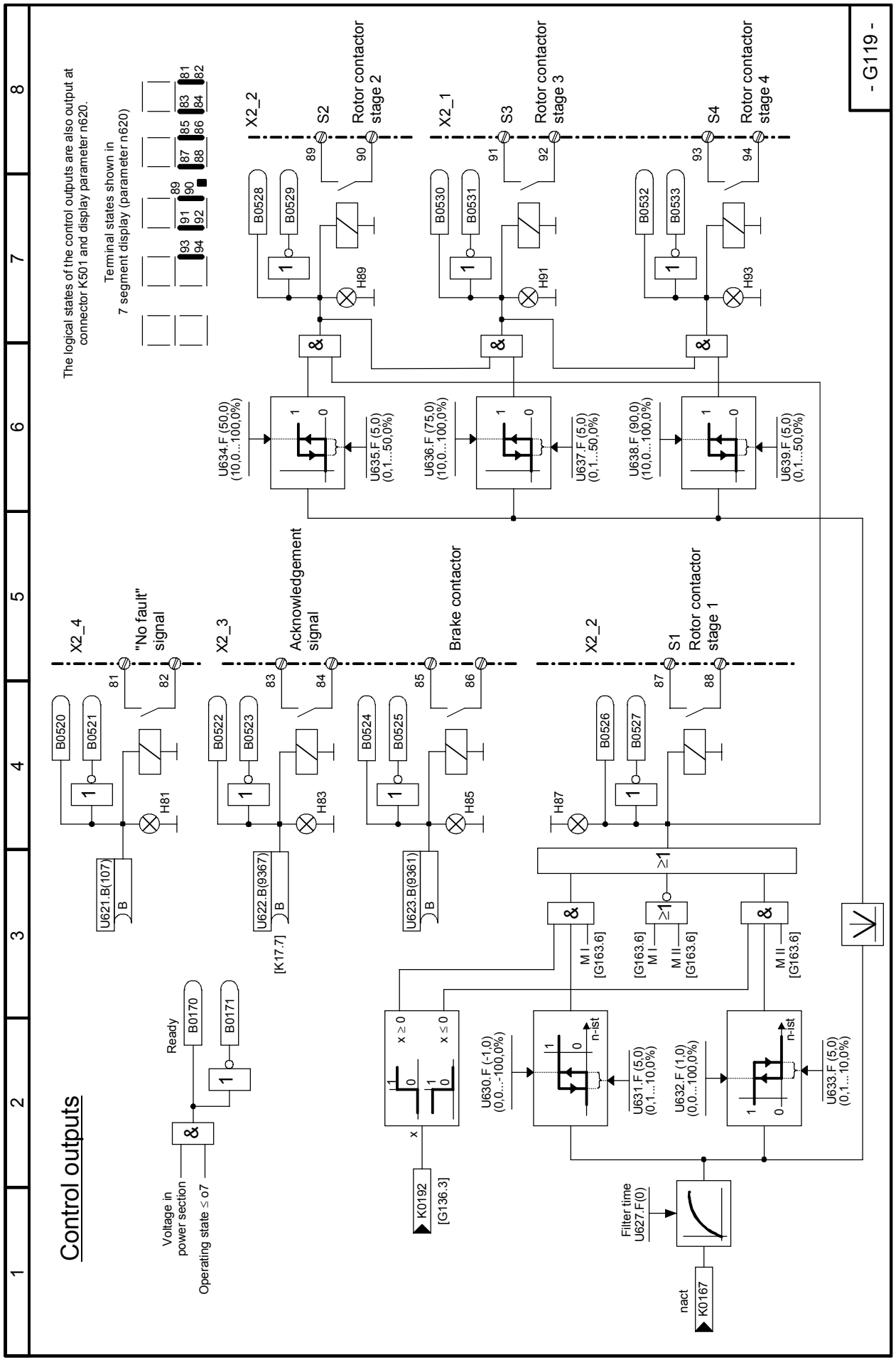

Sheet G120 Fixed values, fixed control bits, constant fixed values and control bits

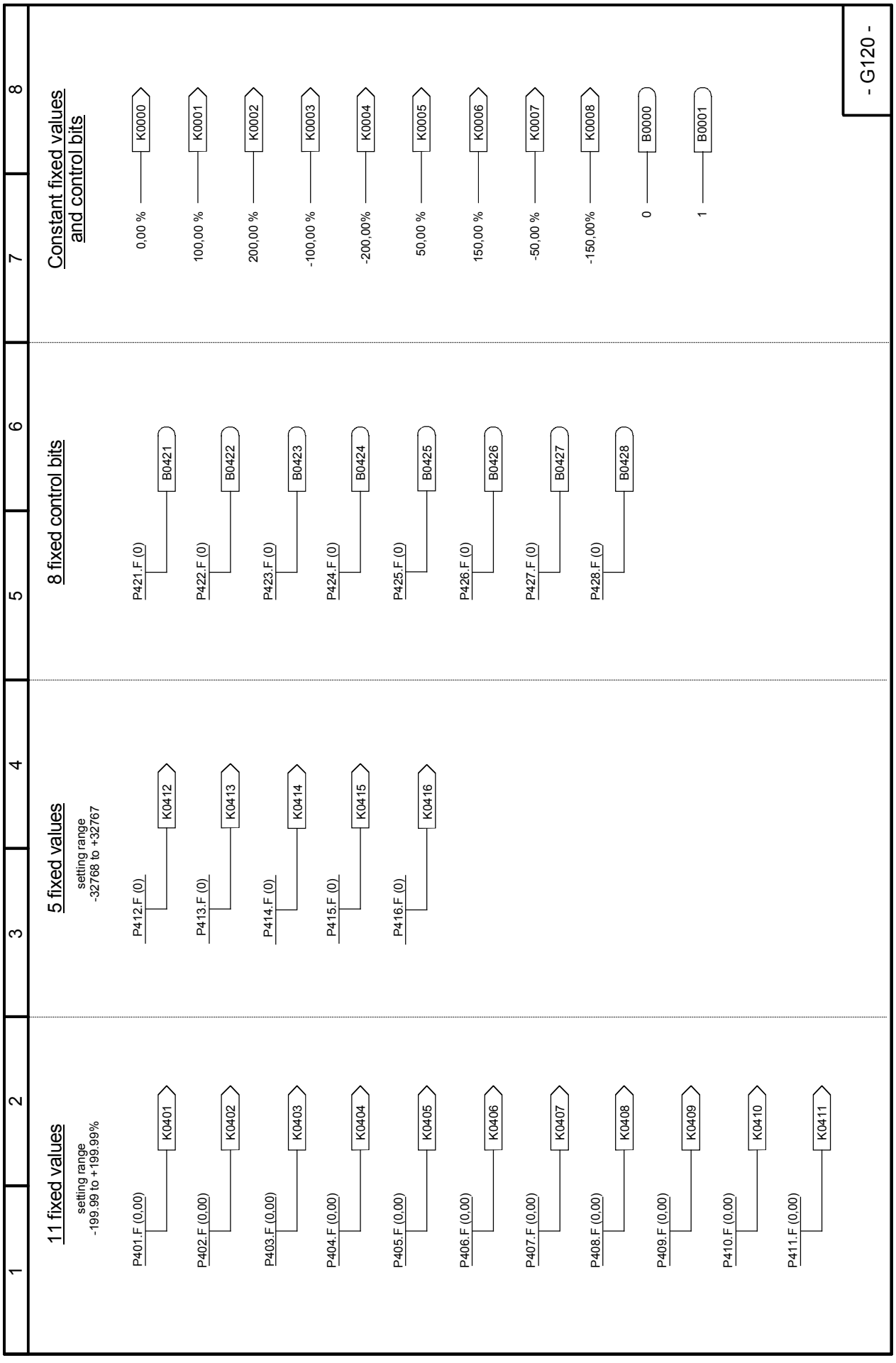

Sheet G121 Connector and binector displays

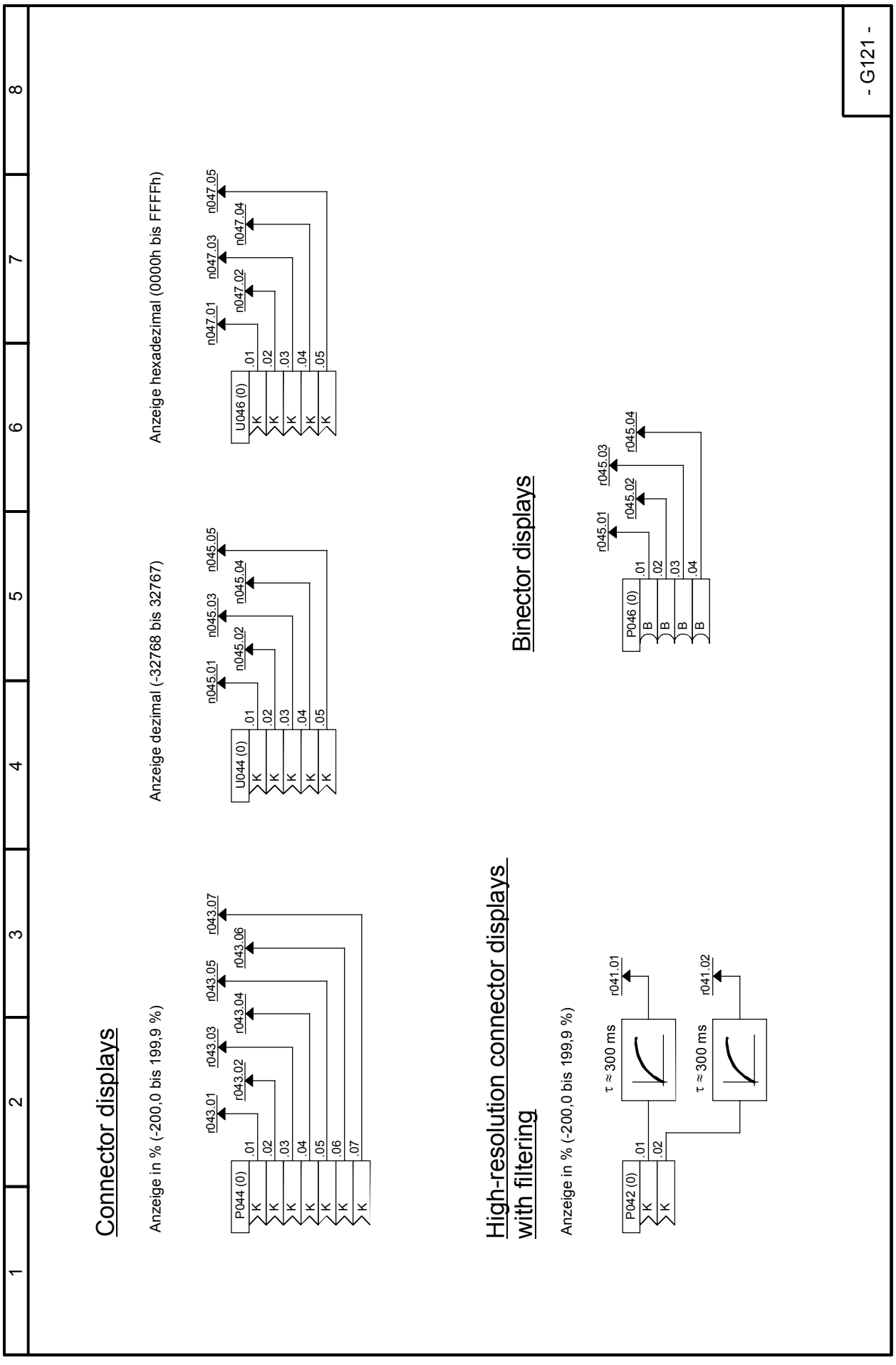

Sheet G124 Connector selector switch

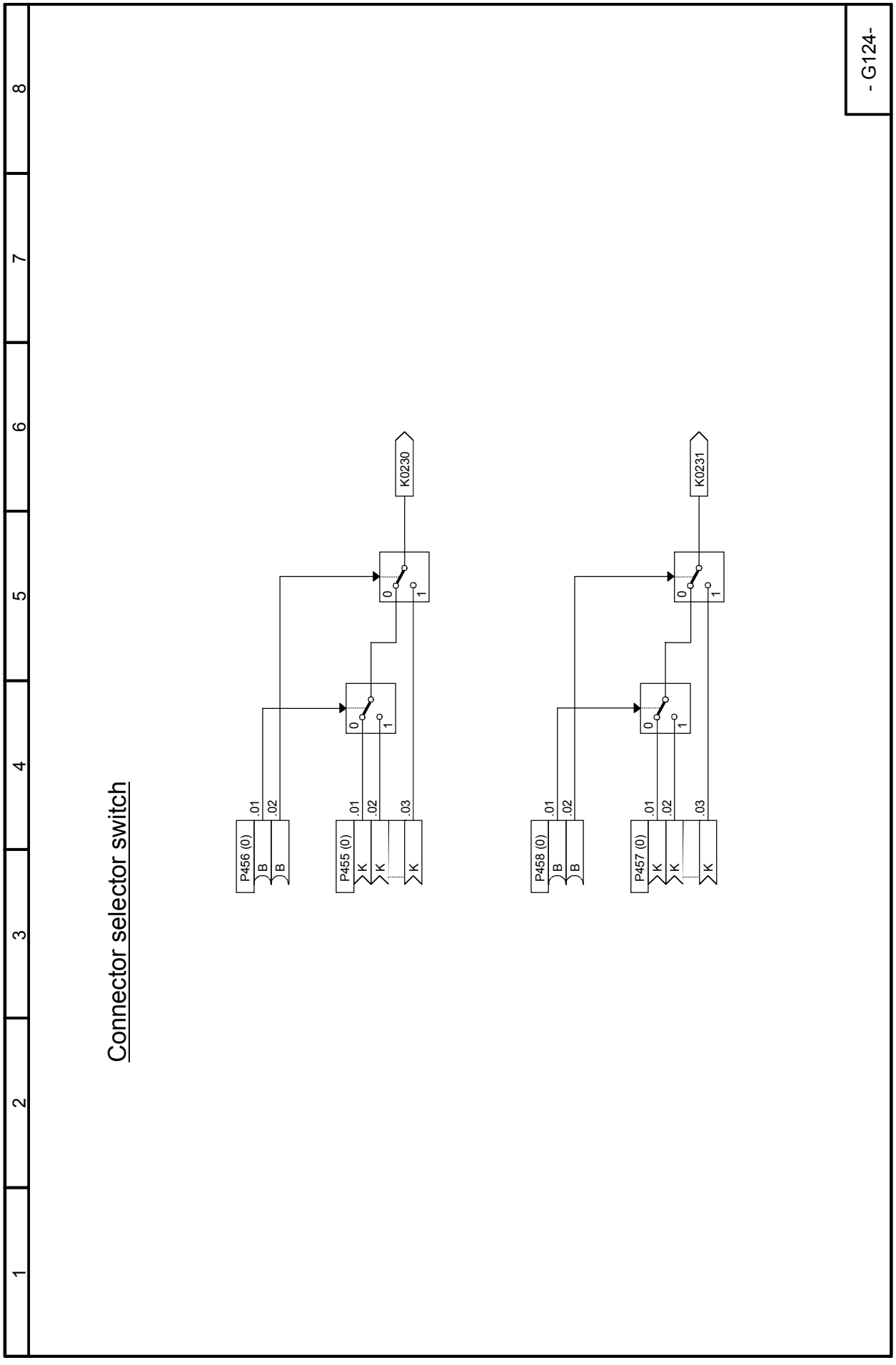

Sheet G125 Evaluation of a 4-step master switch

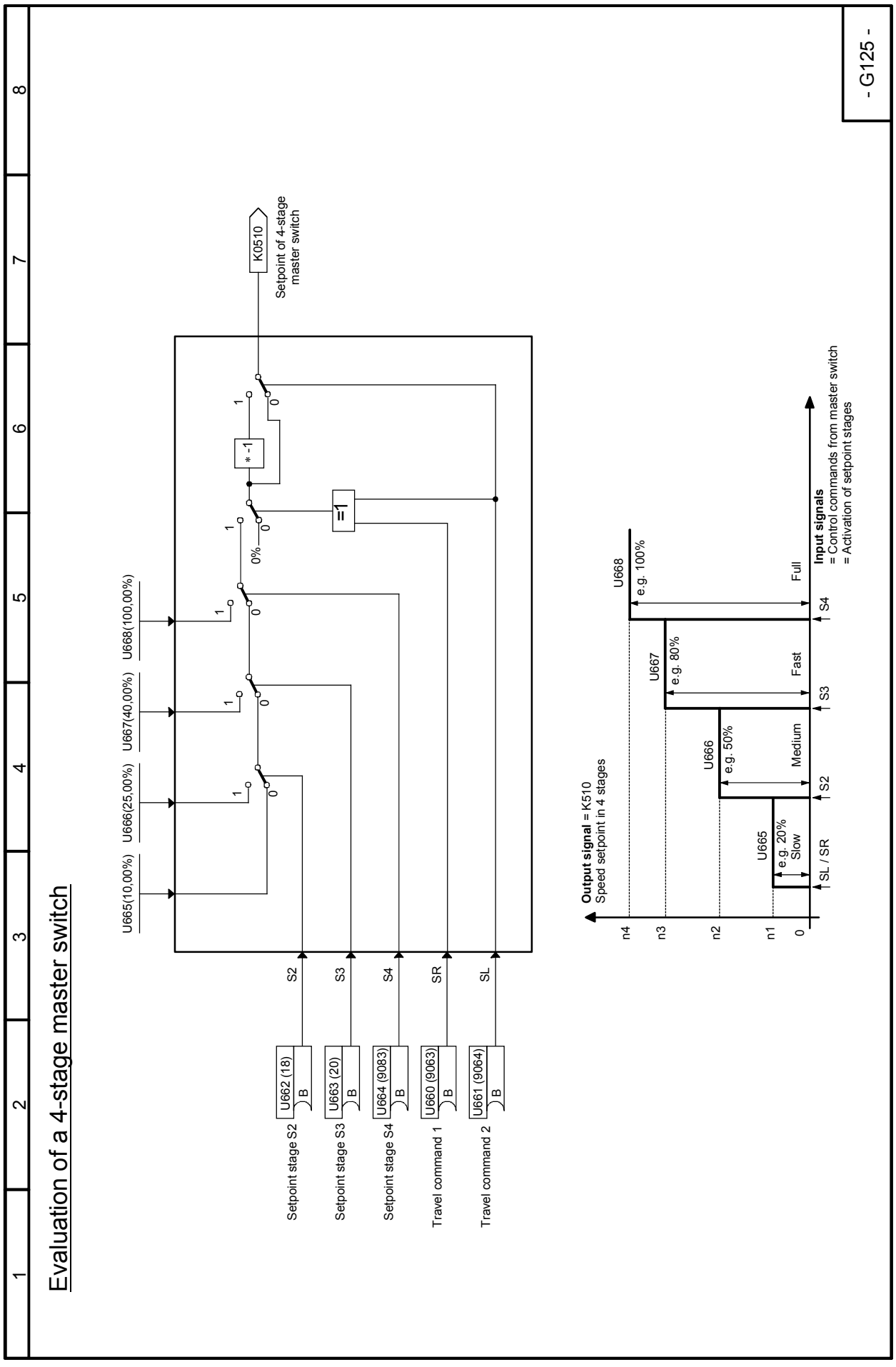

Sheet G126 Motorized potentiometer

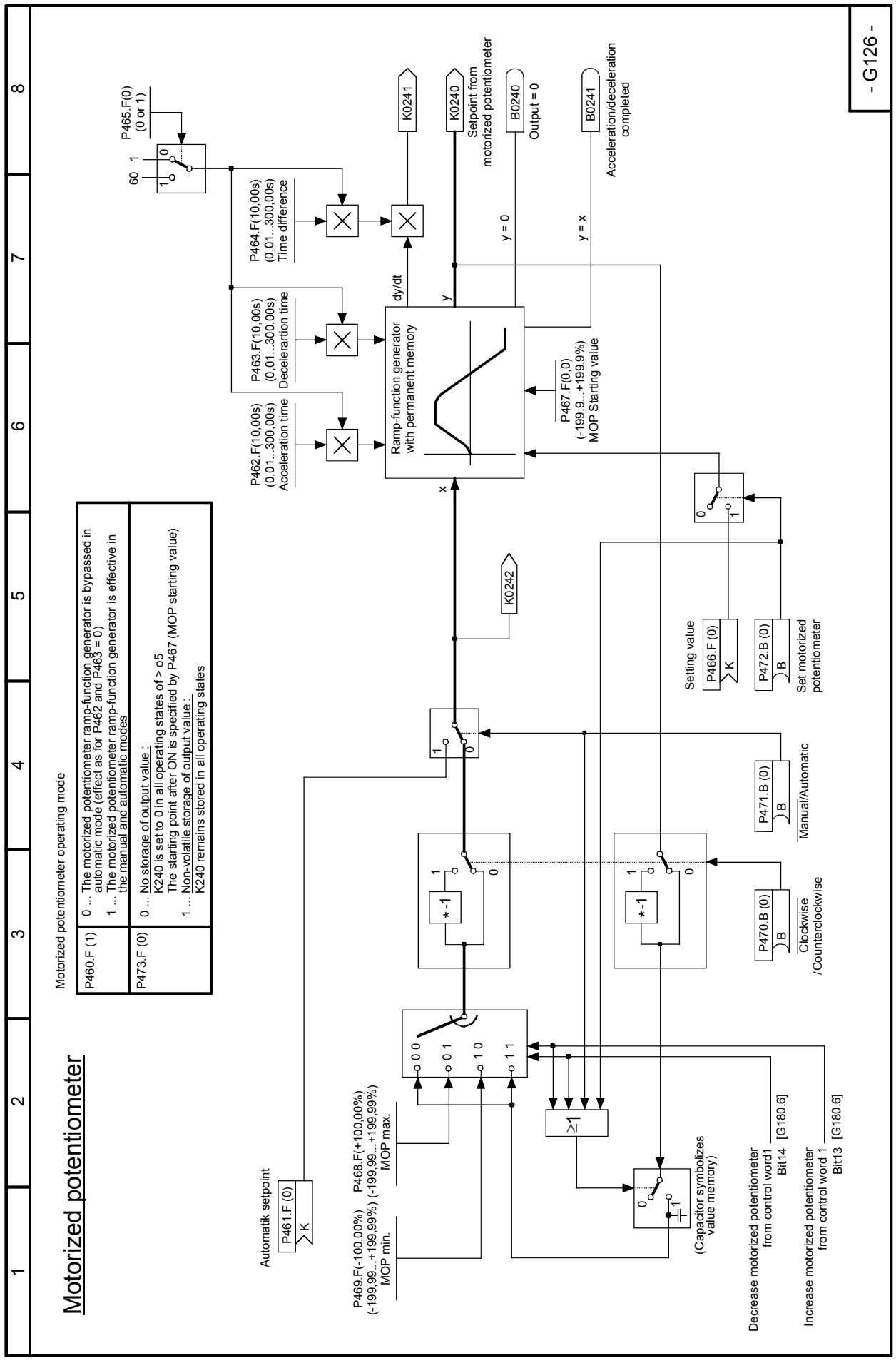

Sheet G127 Fixed setpoint

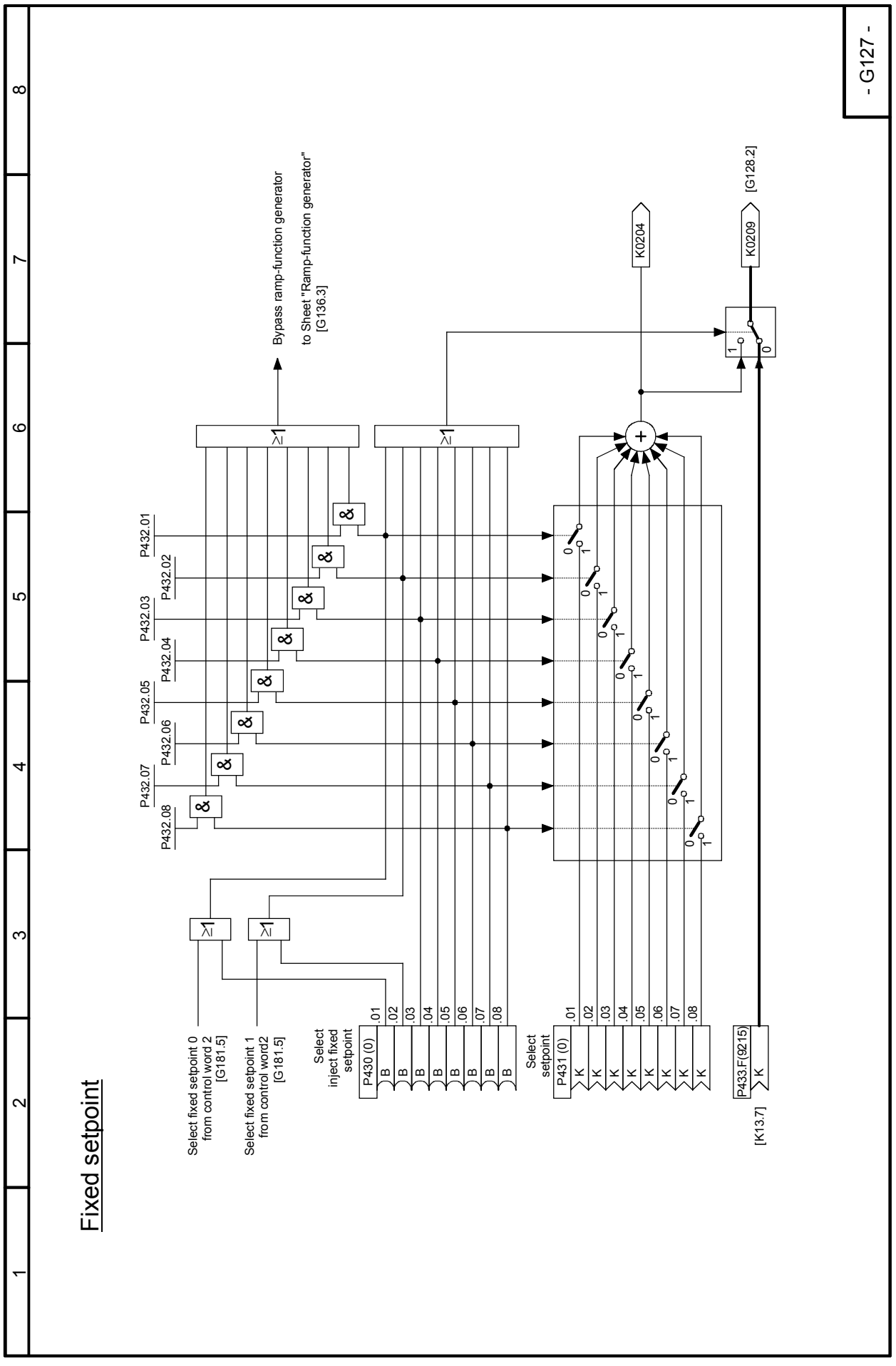

Sheet G128 Oscillation, square-wave generator

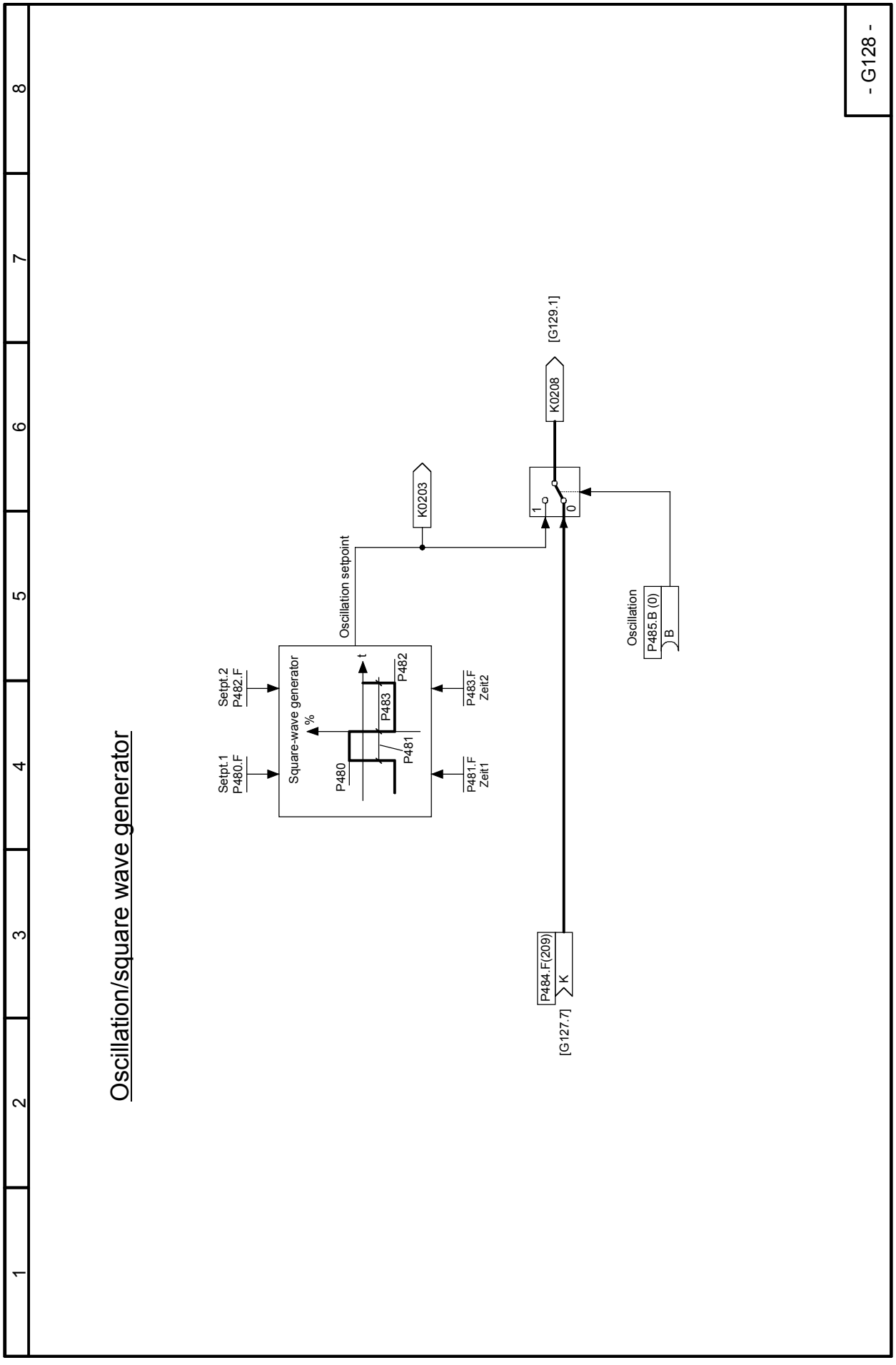

Sheet G129 Inching setpoint

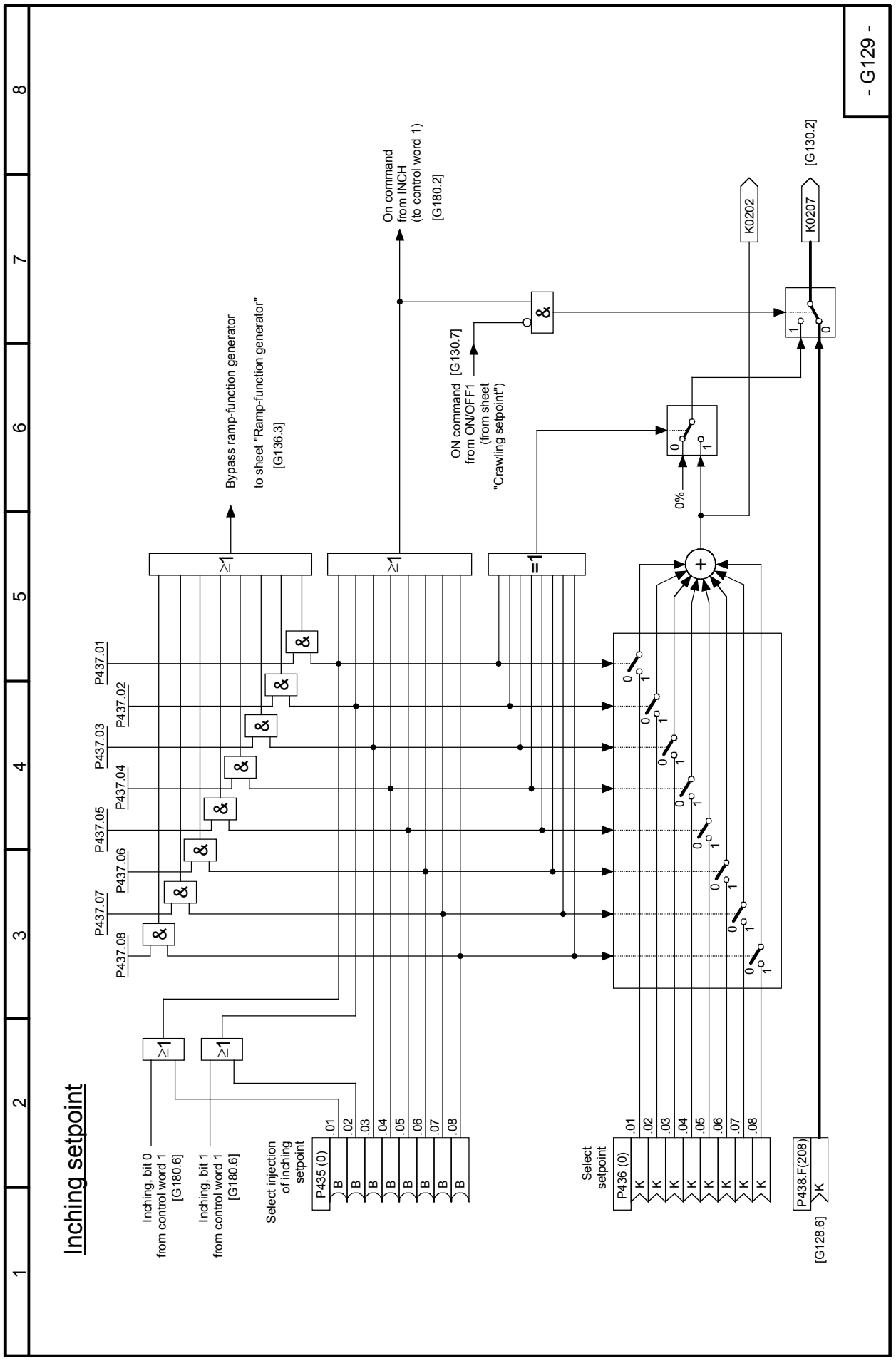

Sheet G130 Crawling setpoint / terminal 37

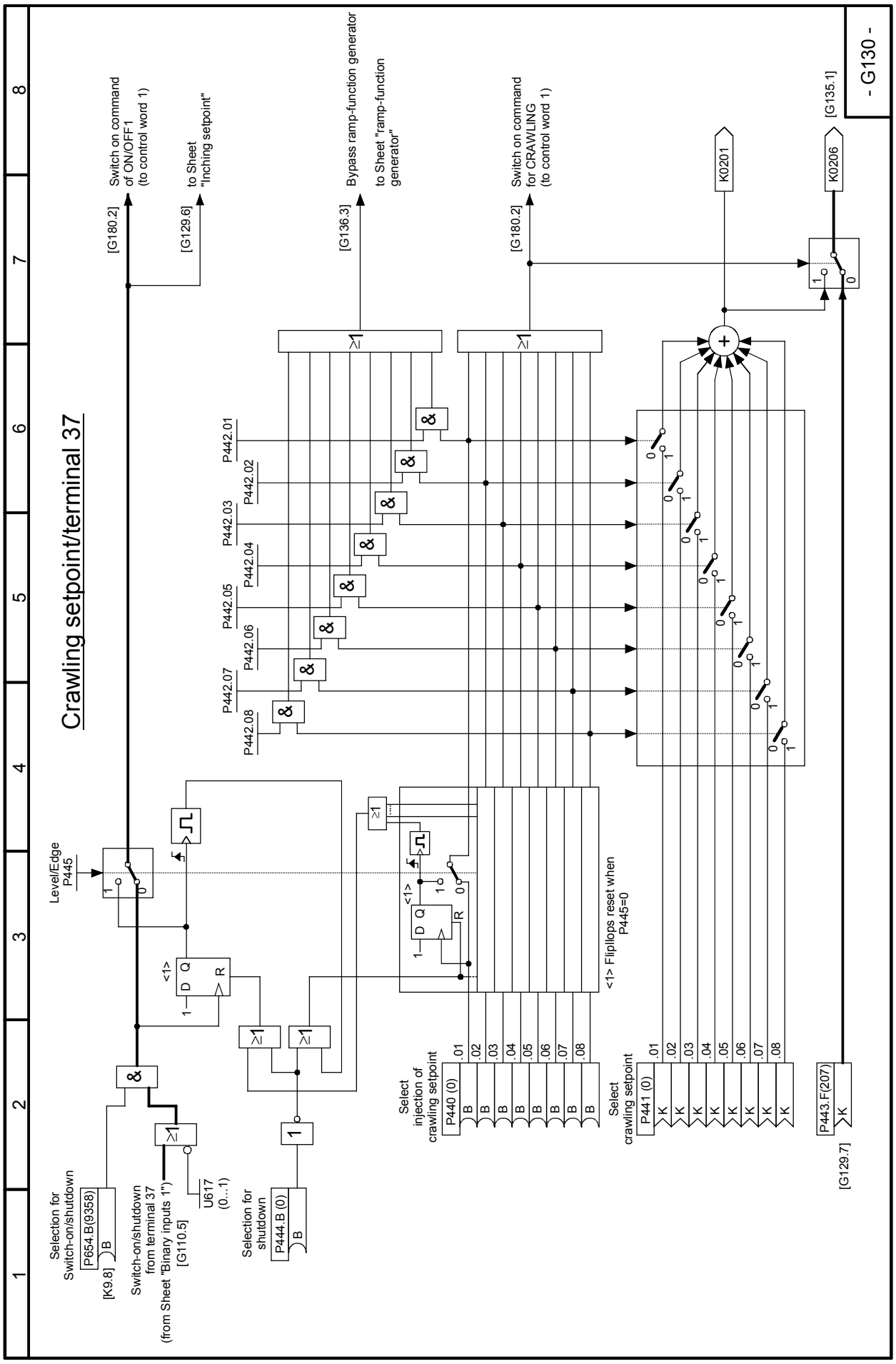

Sheet G135 Setpoint processing

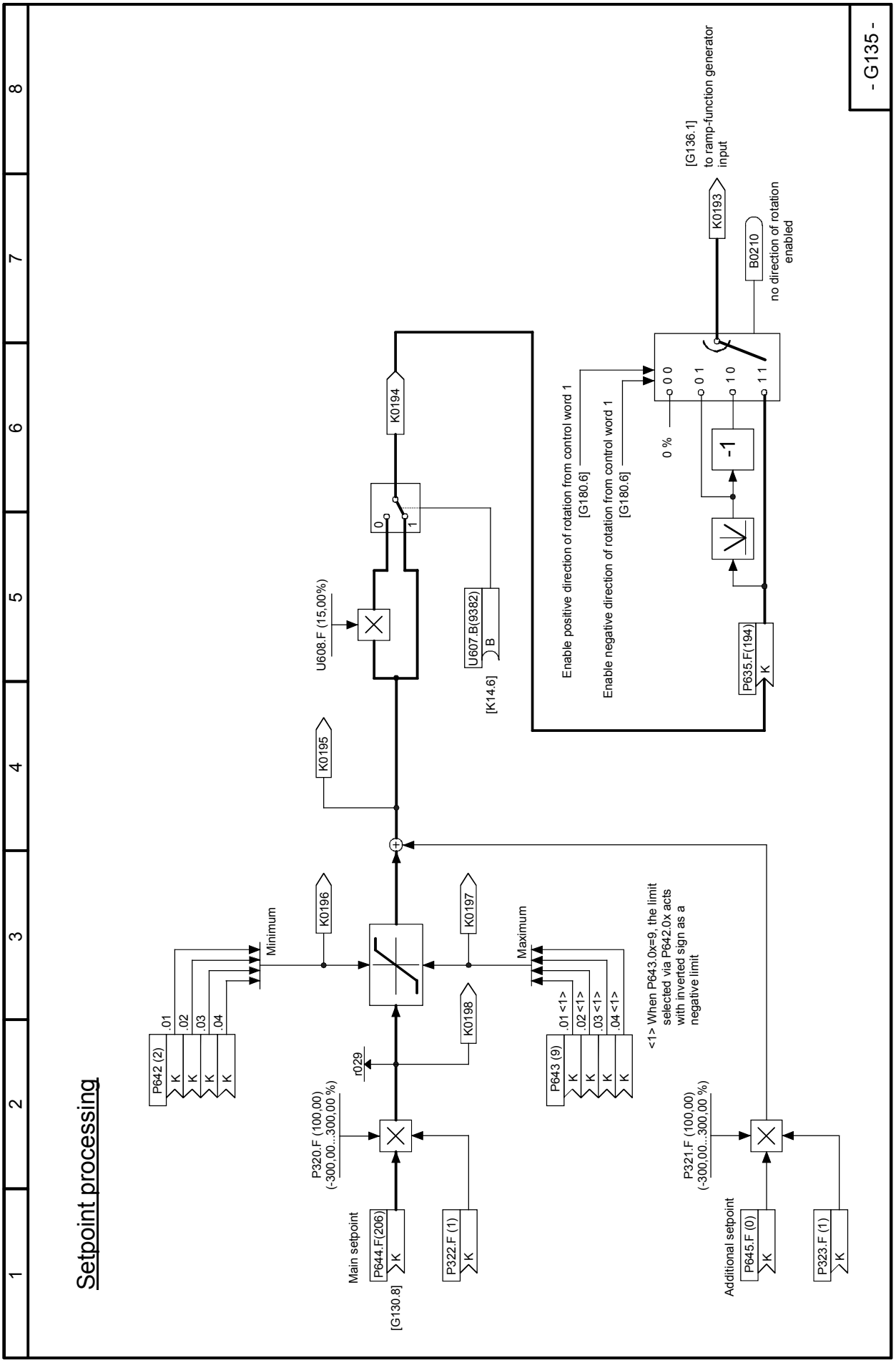

Sheet G136 Ramp-function generator (1)

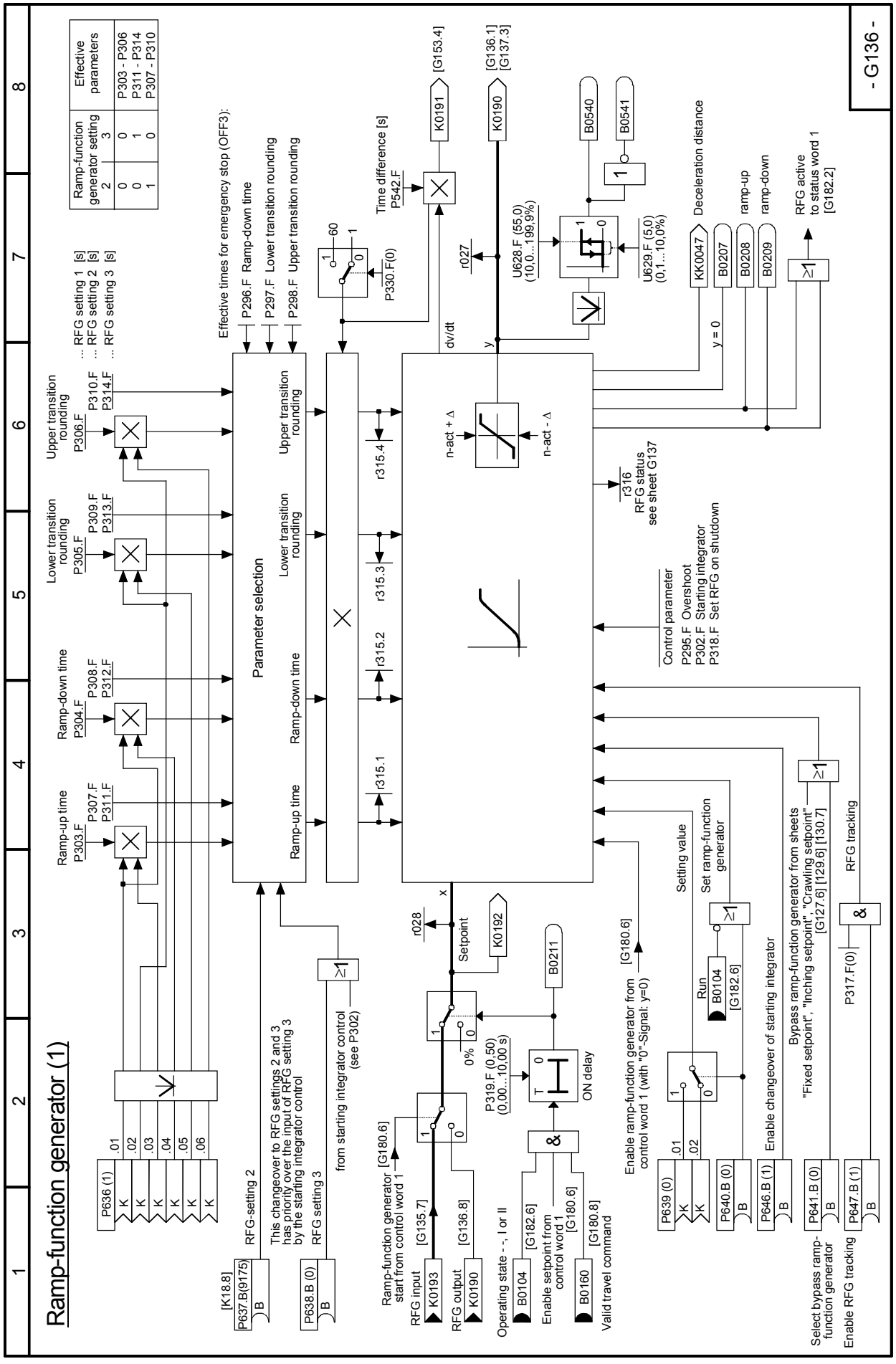

Sheet G137 Ramp-function generator (2)

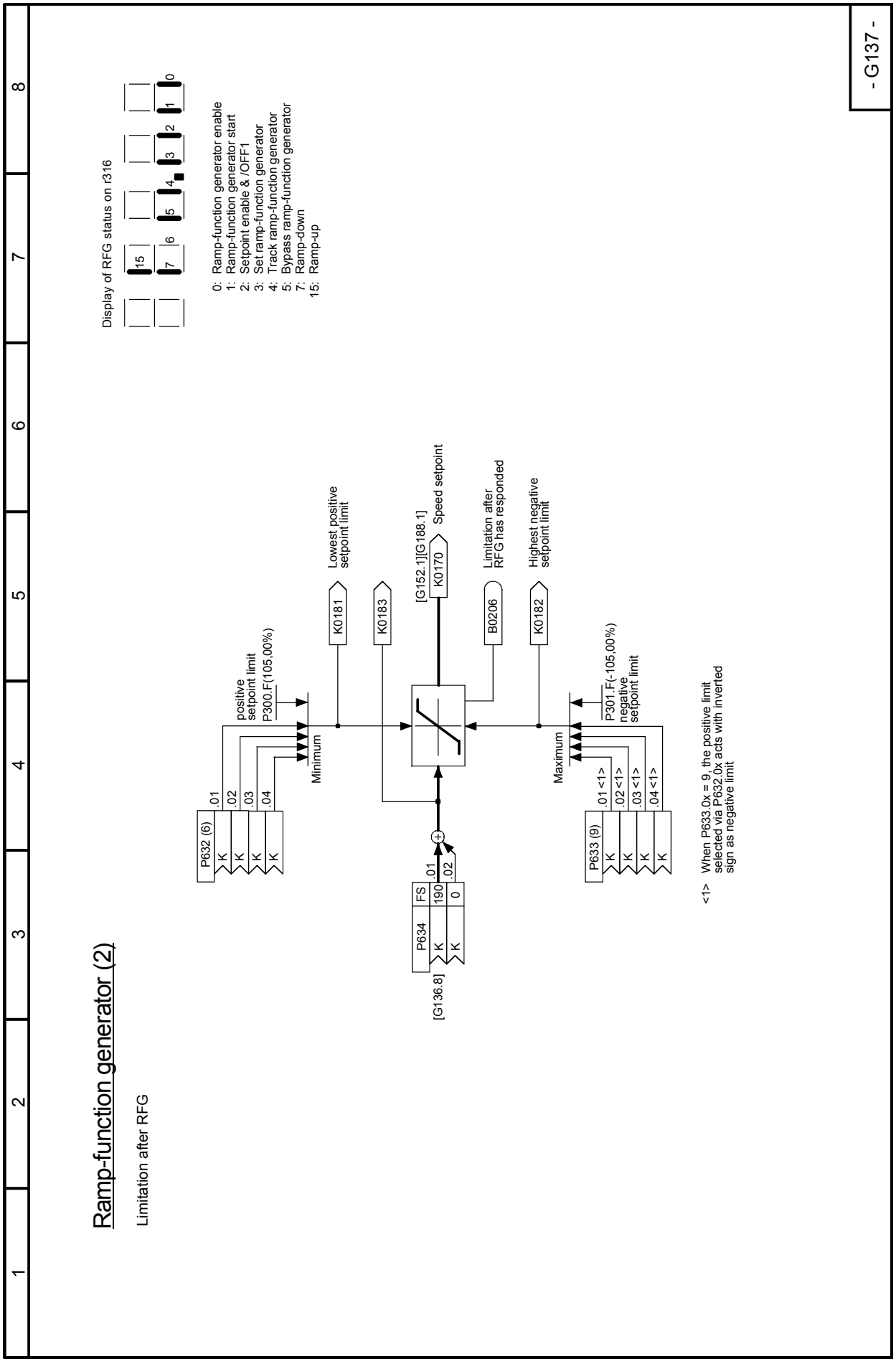

Sheet G140 Brake control

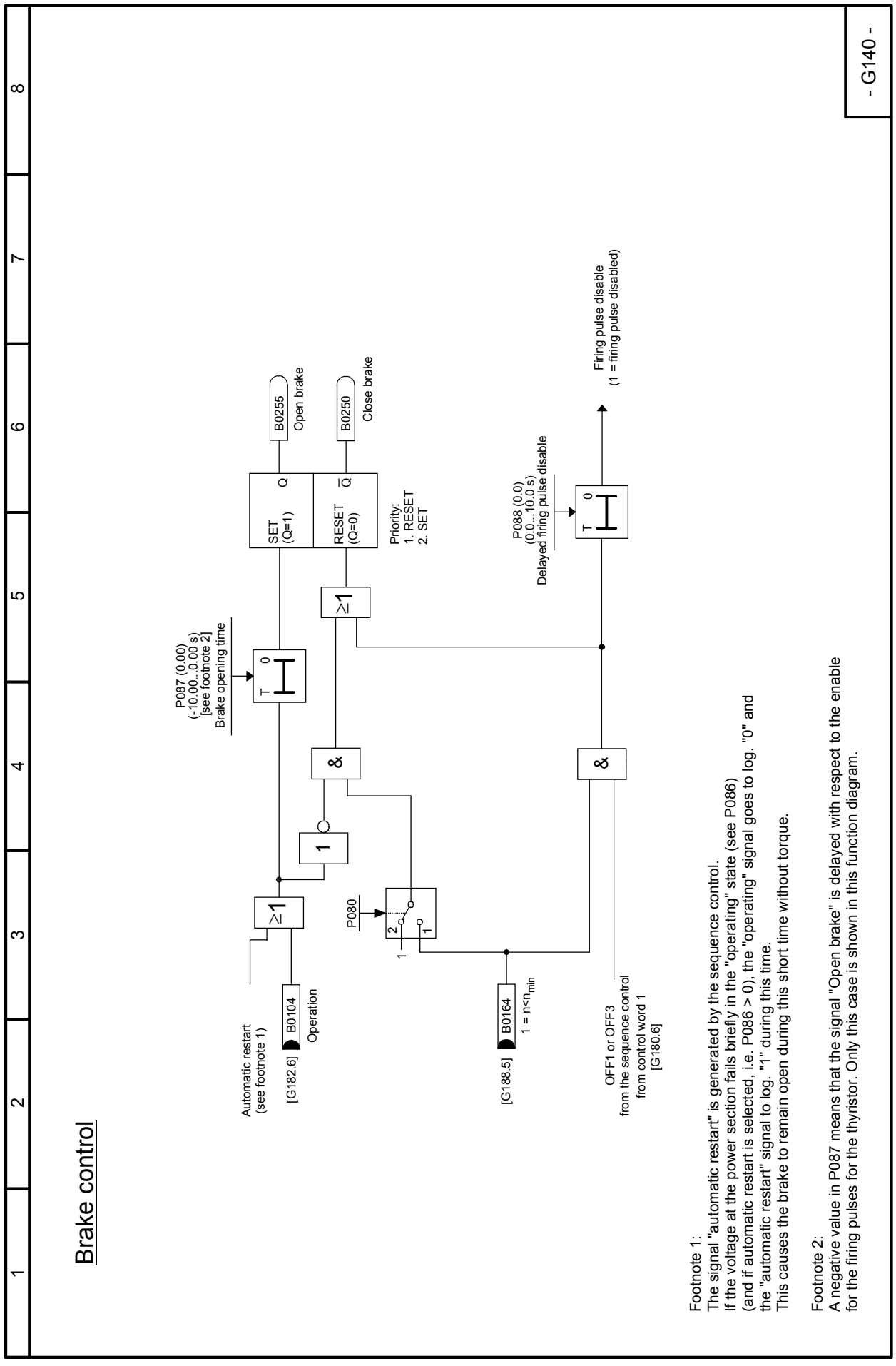

Footnote 1:
The signal "automatic restart" is generated by the sequence control.
If the voltage at the power section fails briefly in the "operating" state (see P086)
(and if automatic restart is selected, i.e. P086 > 0), the "operating" signal goes to log. "0" and
the "automatic restart" signal to log. "1" during this time.
This causes the brake to remain open during this short time without torque.

Footnote 2:
A negative value in P087 means that the signal "Open brake" is delayed with respect to the enable
for the firing pulses for the thyristor. Only this case is shown in this function diagram.

Sheet G145 Pulse generator evaluation

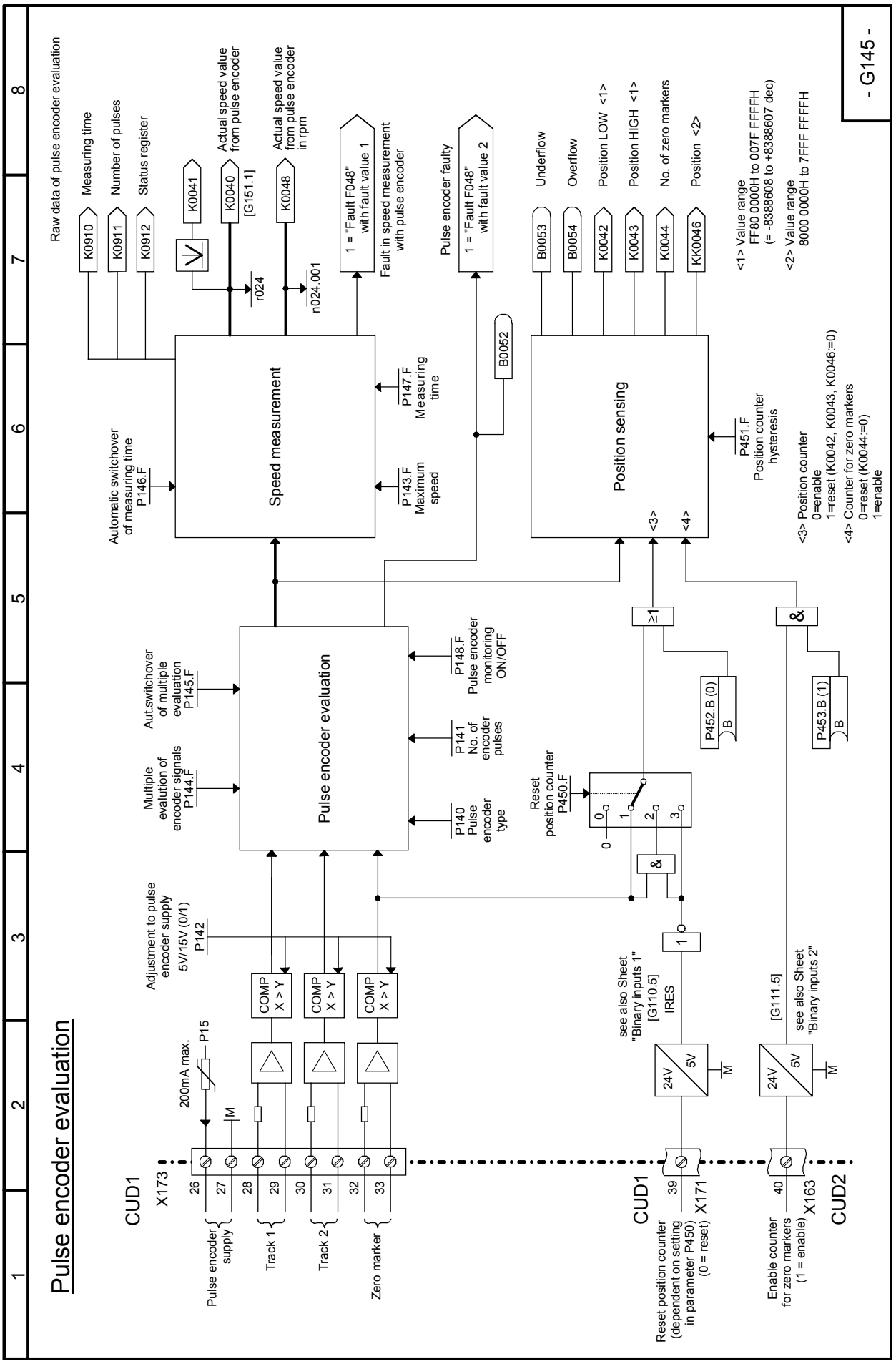

Sheet G150 Starting pulse - speed controller

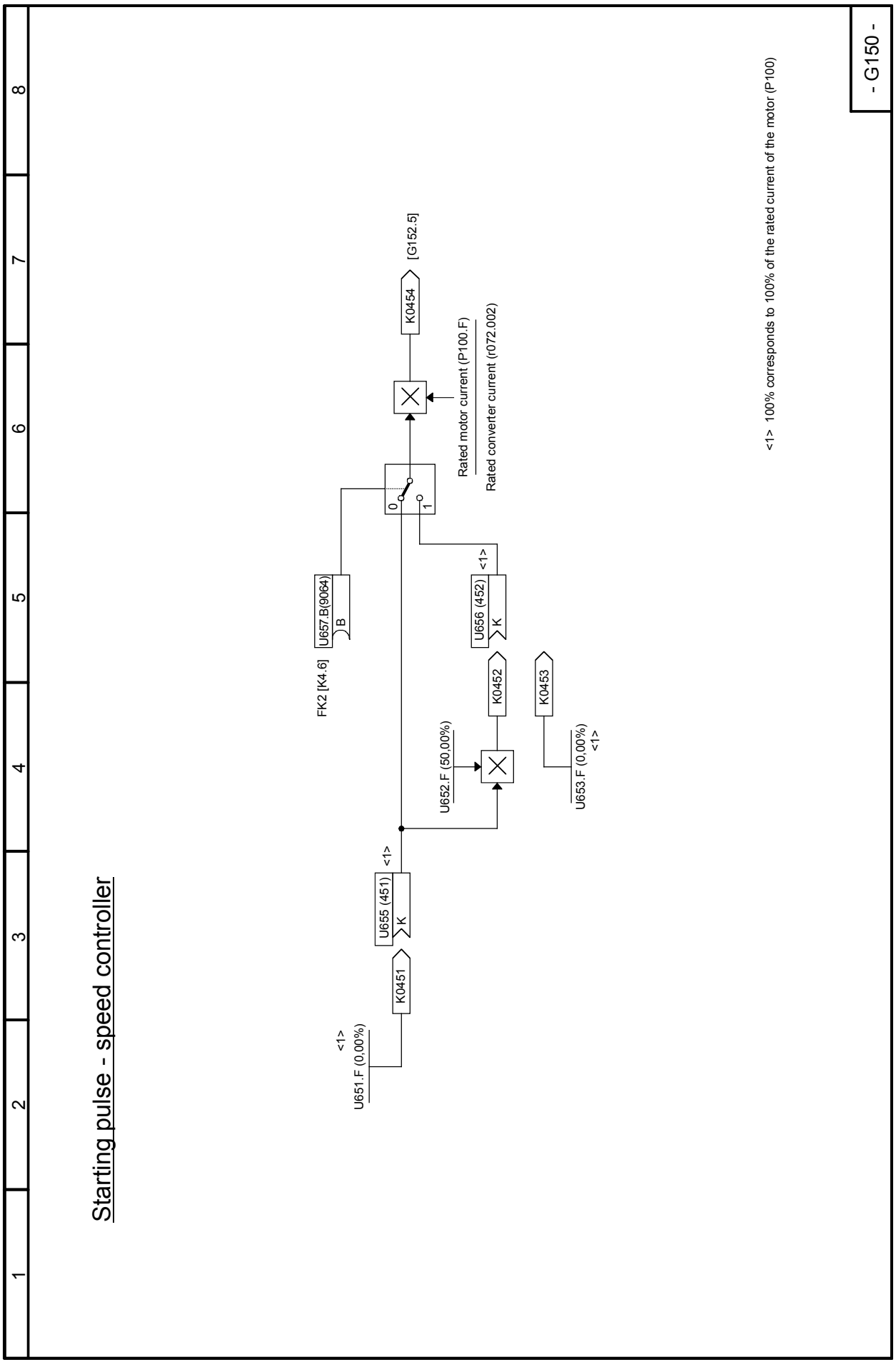

Sheet G151 Speed controller (1)

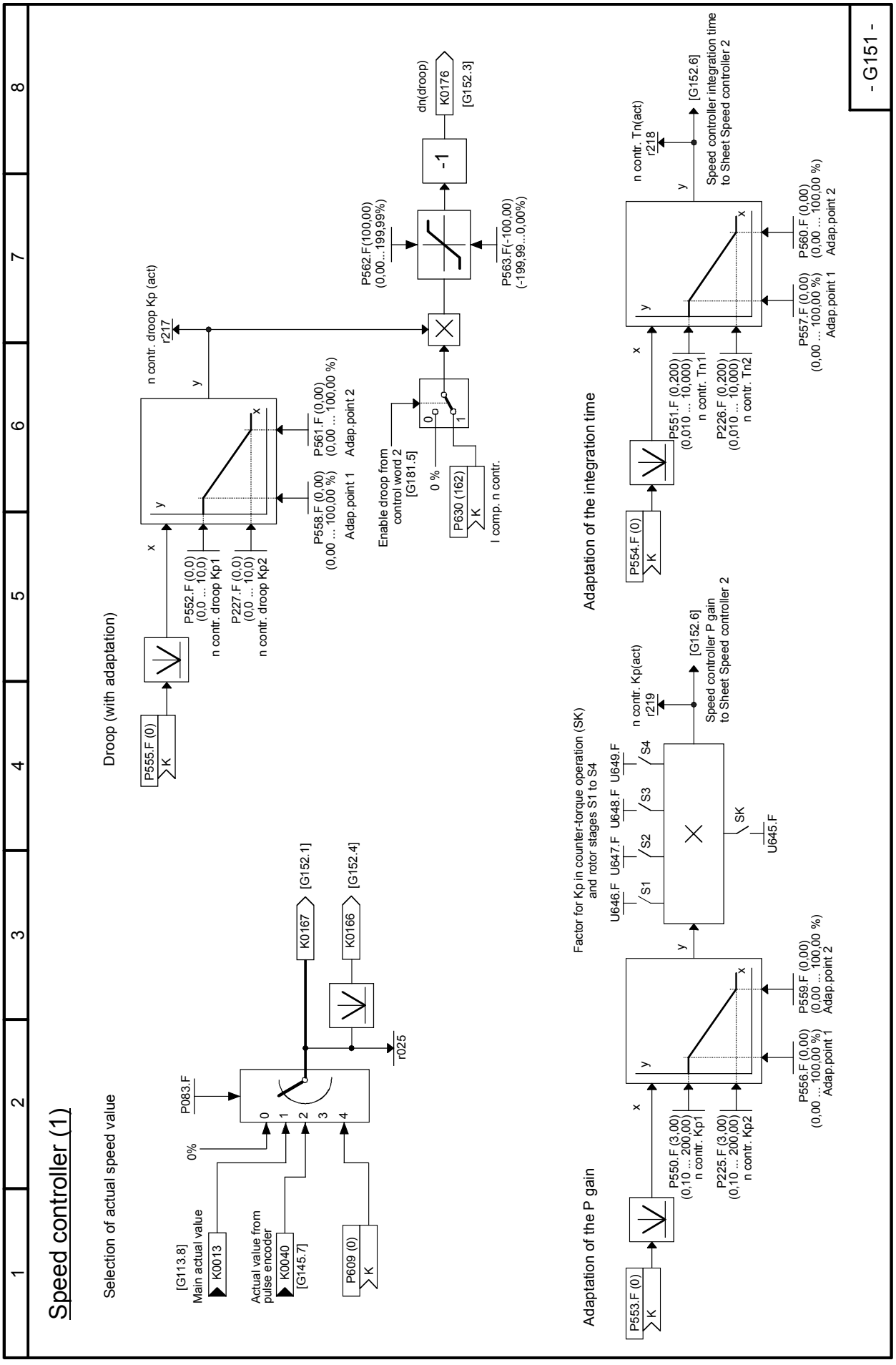

Sheet G152 Speed controller (2)

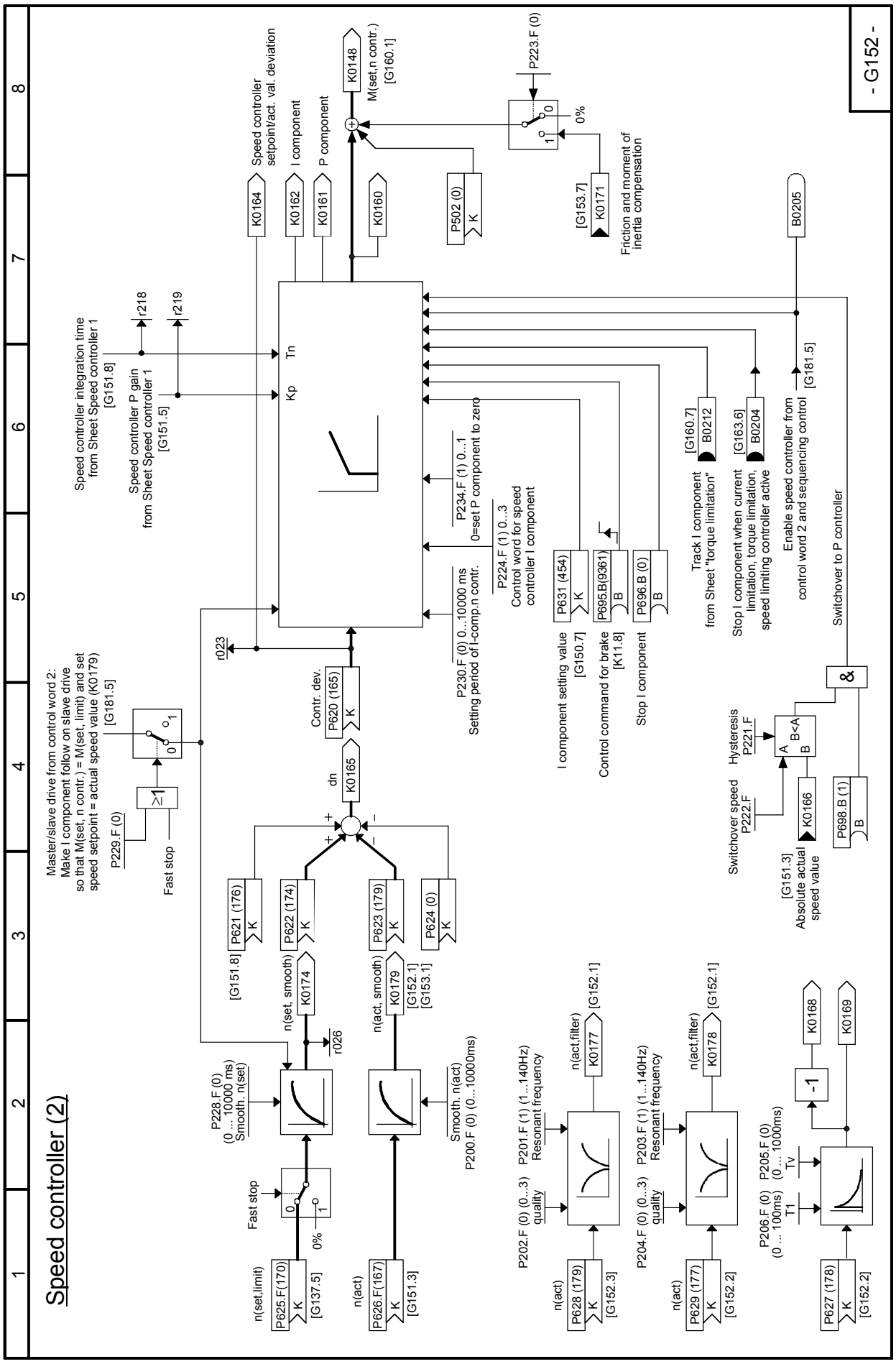

Sheet G153 Friction compensation, Compensation of moment of inertia (dv/dt injection)

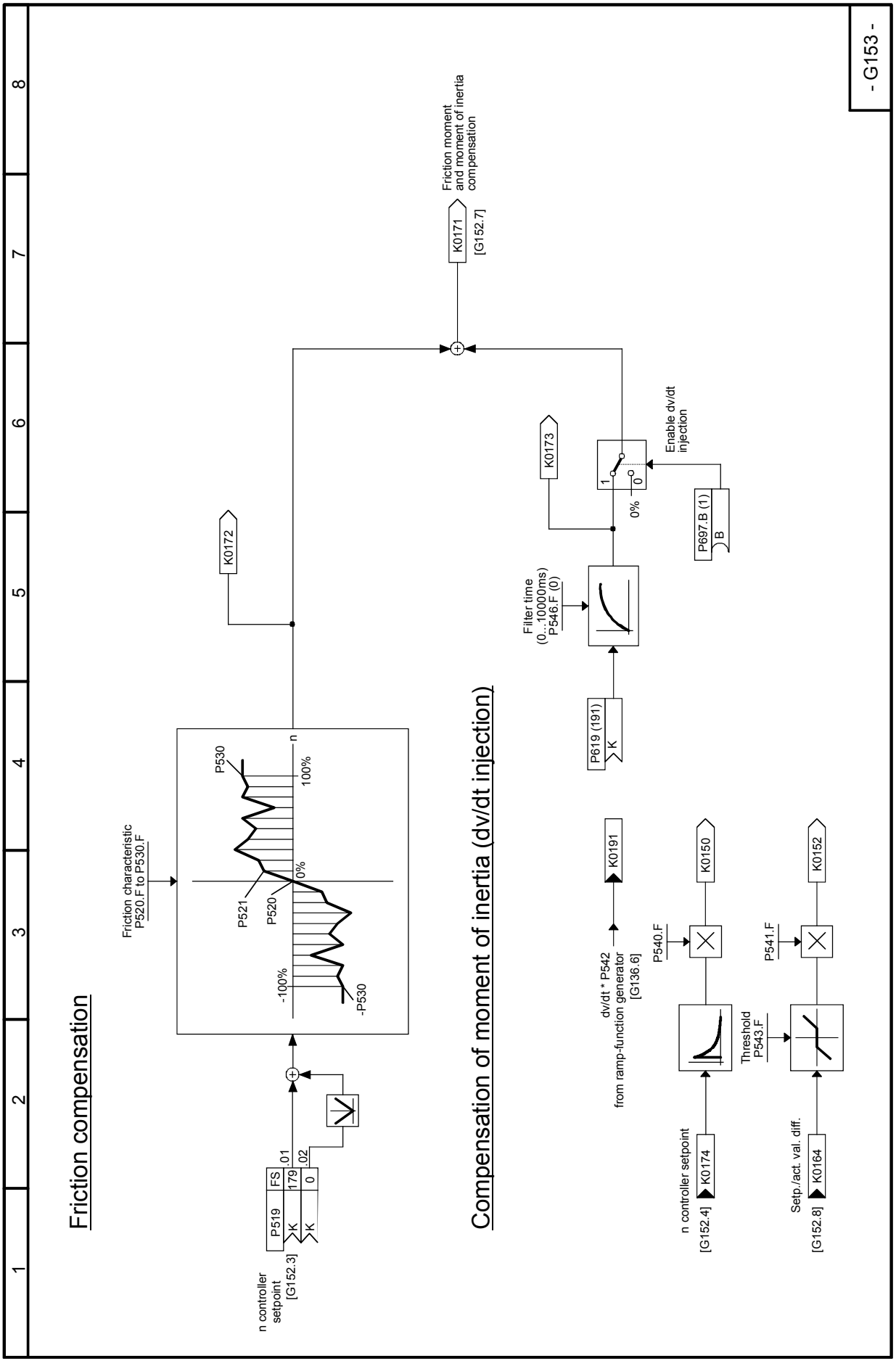

Sheet G160 Torque limitation, speed limit controller

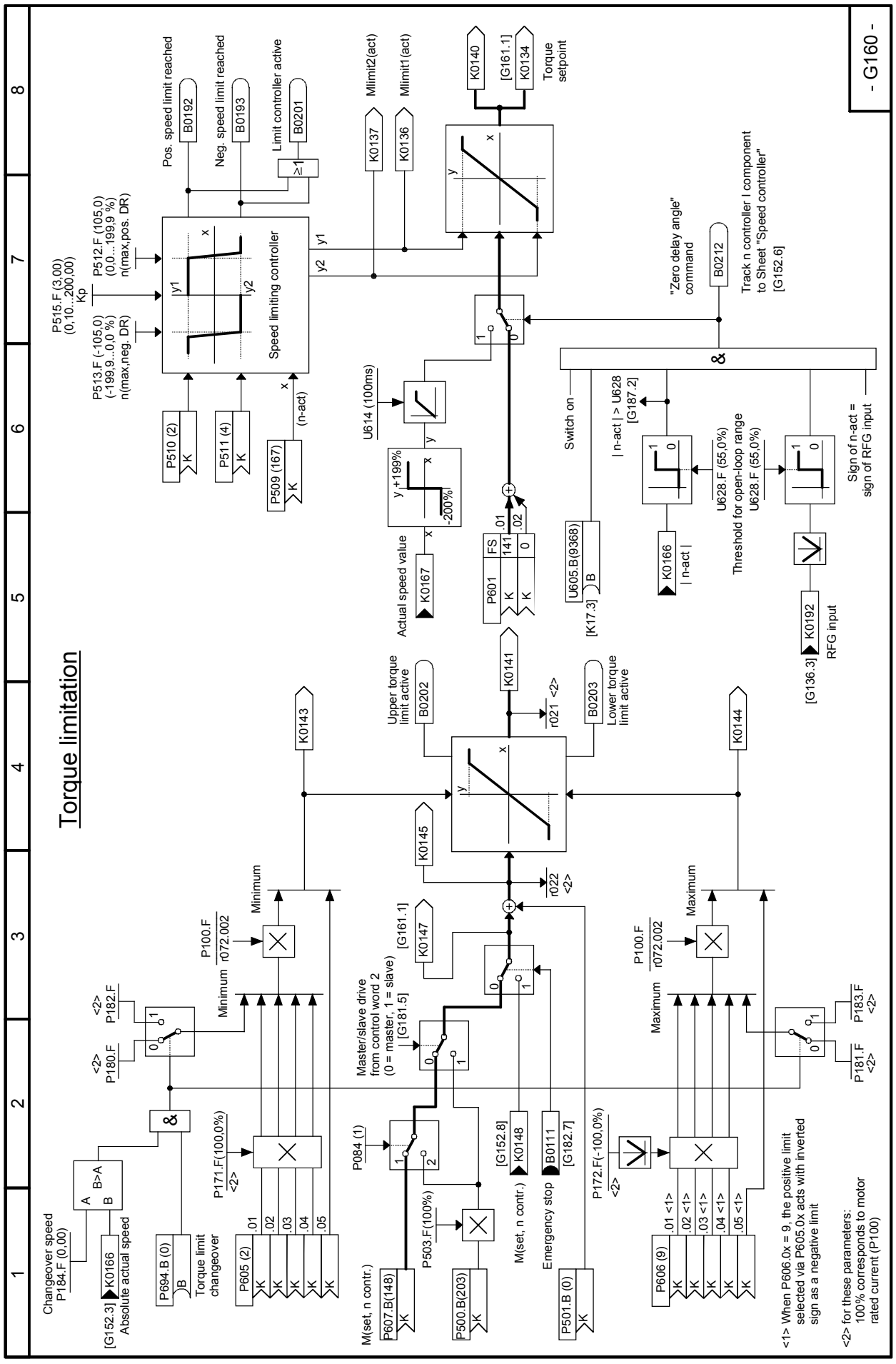

Sheet G161 Current limitation

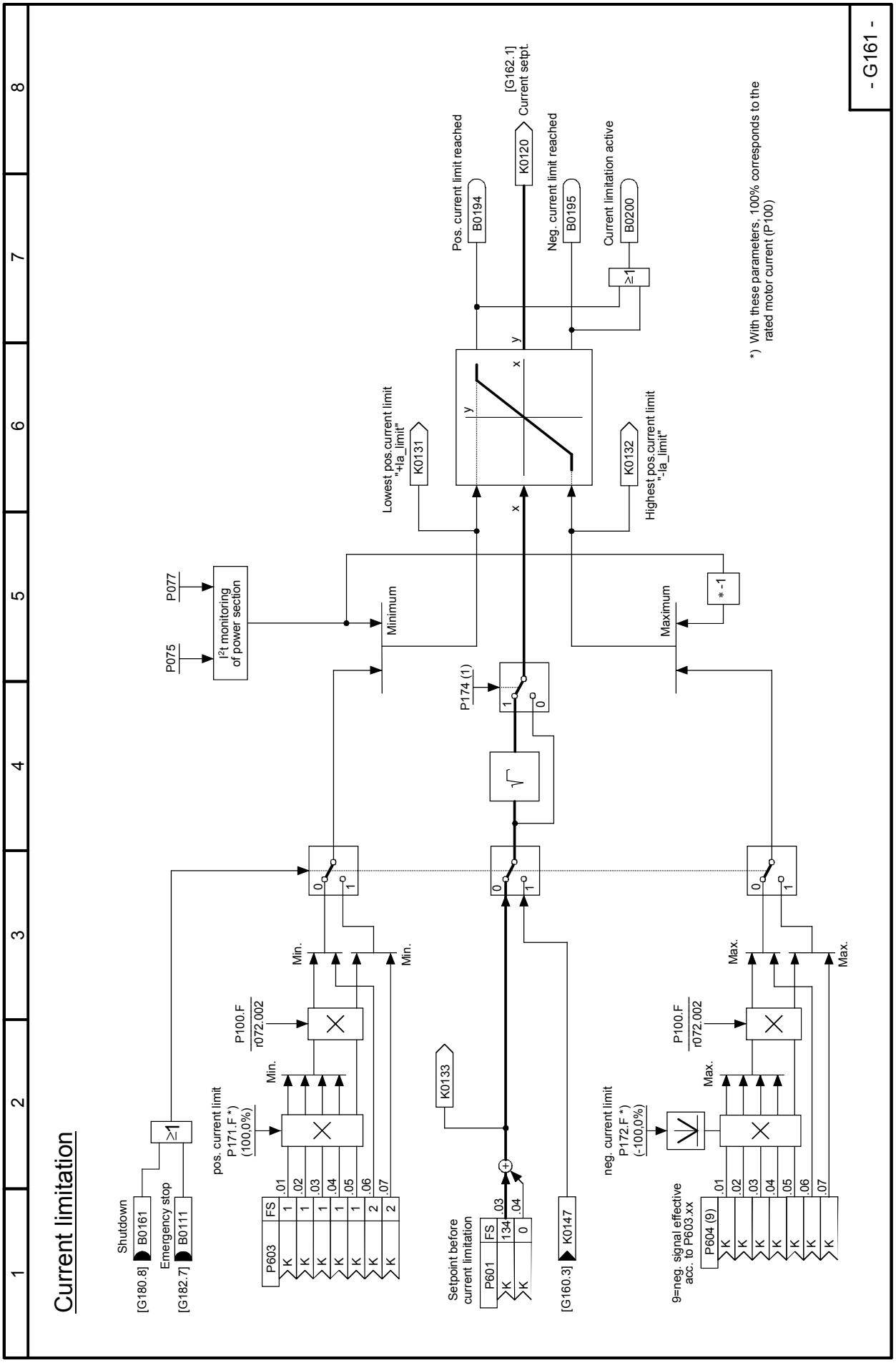

Sheet G162 Closed-loop current control

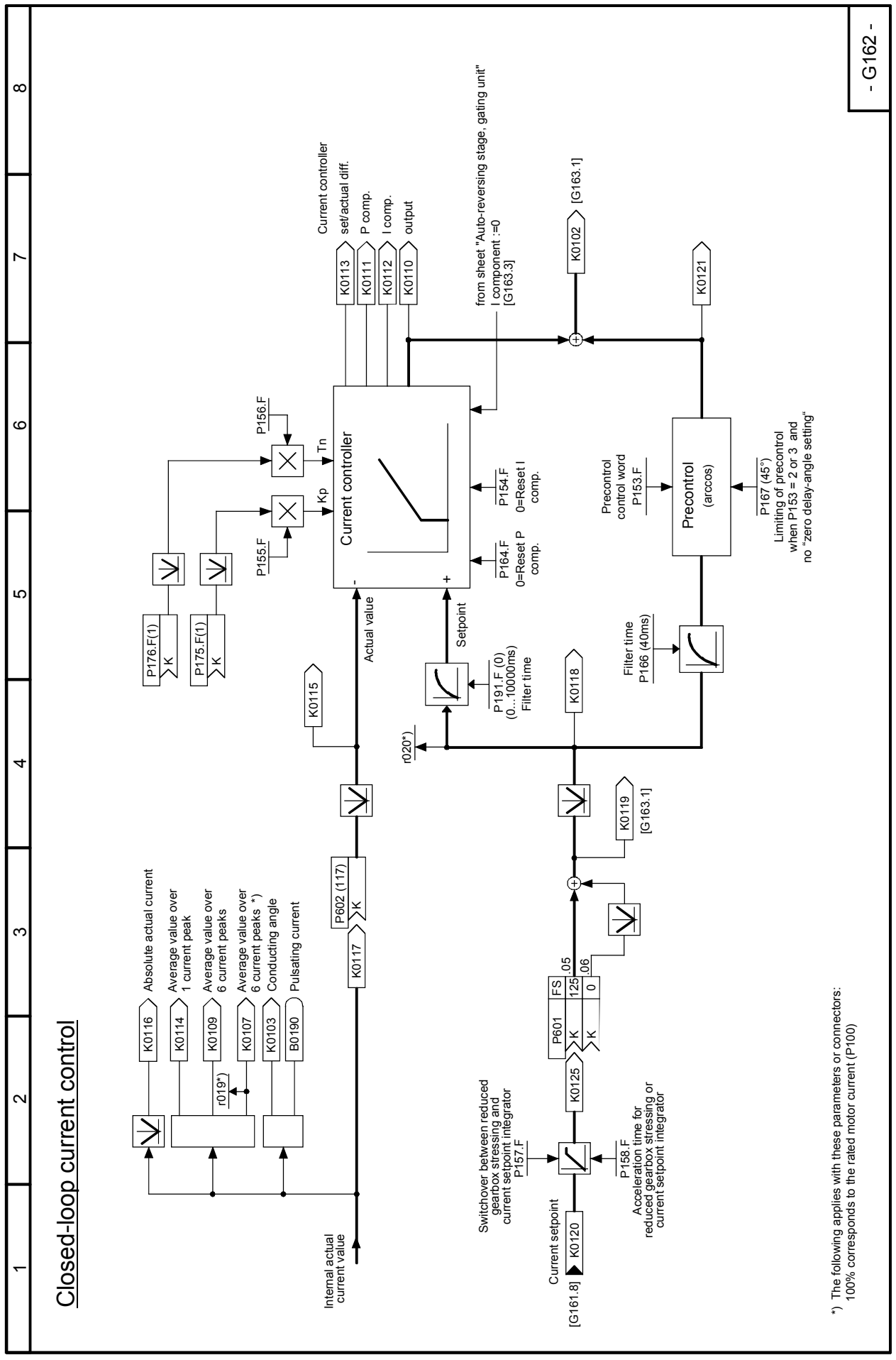

Sheet G163 Auto-reversing stage, gating unit

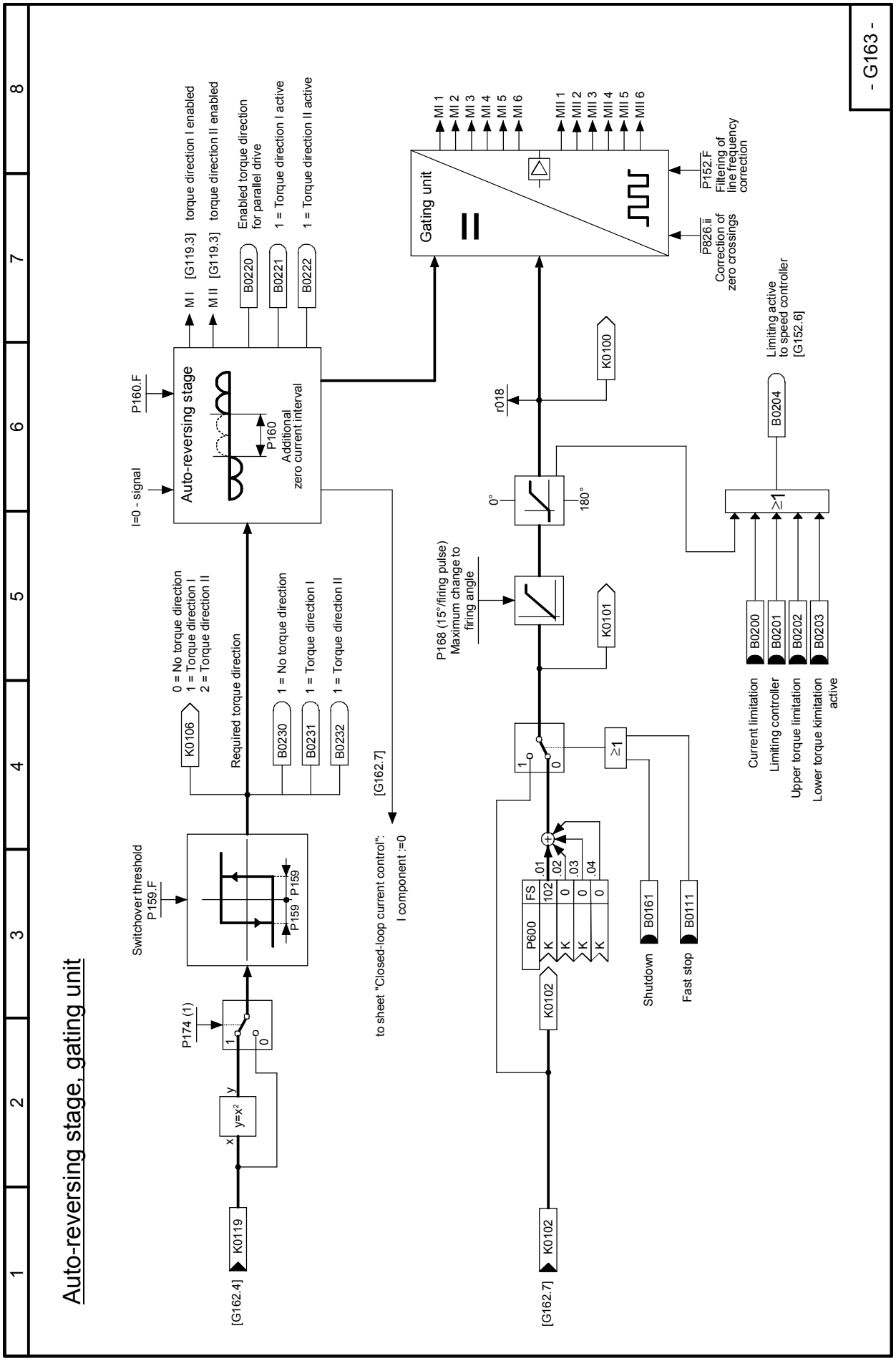

Sheet G169 Serial interfaces: connector-type converters

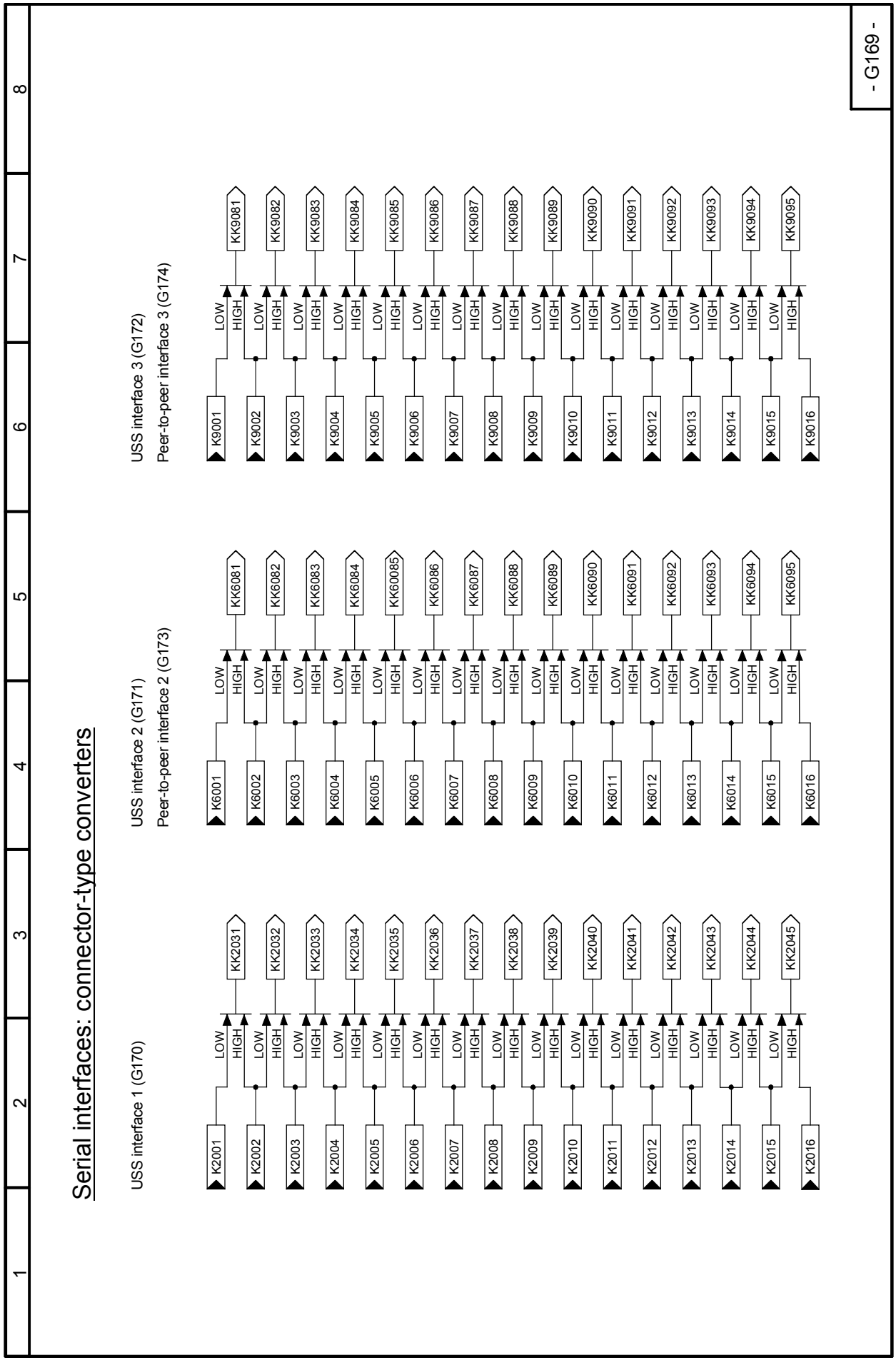

Sheet G170 USS interface 1

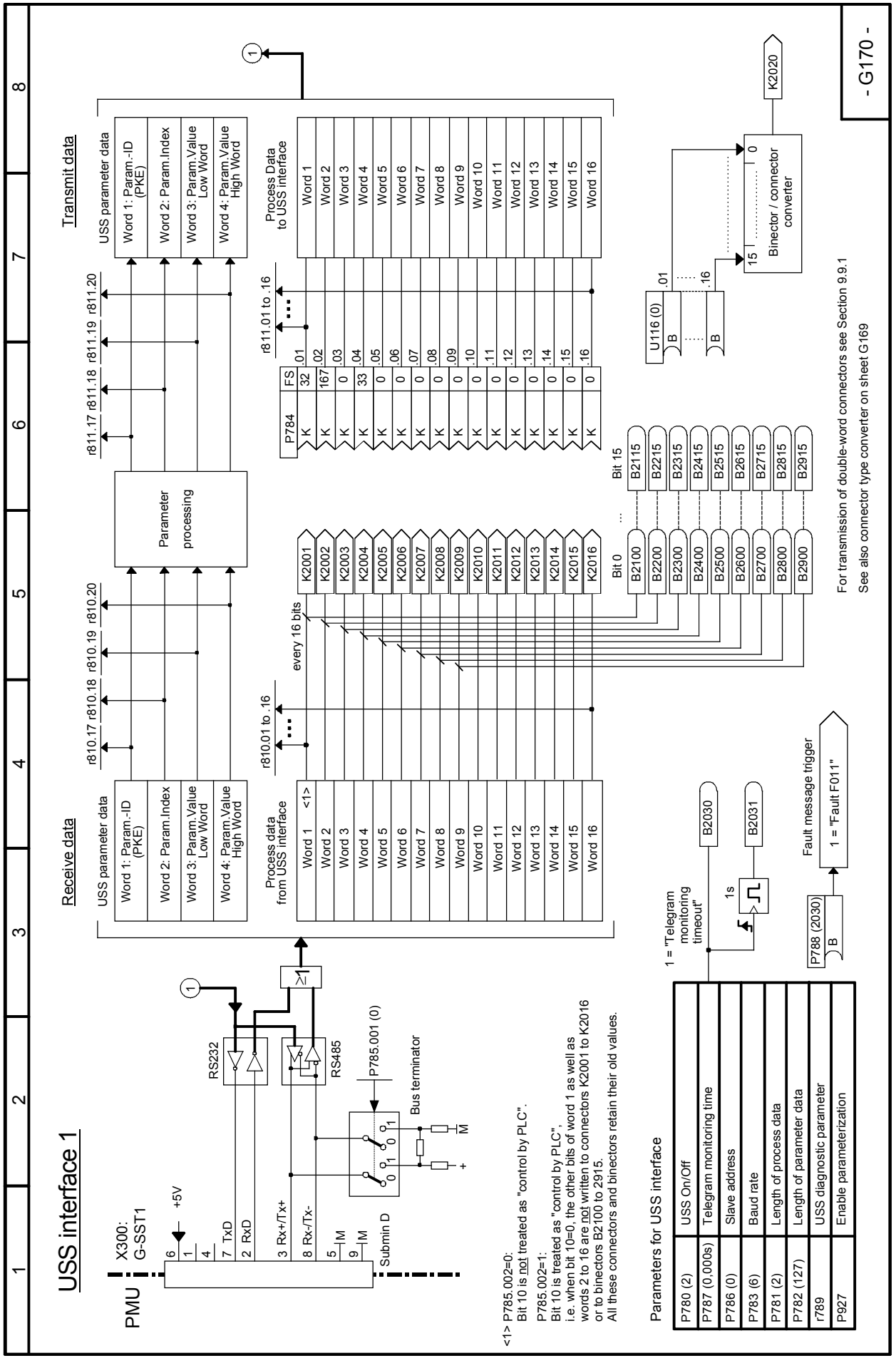

Parameters for USS interface

P780 (2)	USS On/Off
P787 (0,000s)	Telegram monitoring time
P786 (0)	Slave address
P783 (6)	Baud rate
P781 (2)	Length of process data
P782 (127)	Length of parameter data
r789	USS diagnostic parameter
P927	Enable parameterization

Sheet G171 USS interface 2

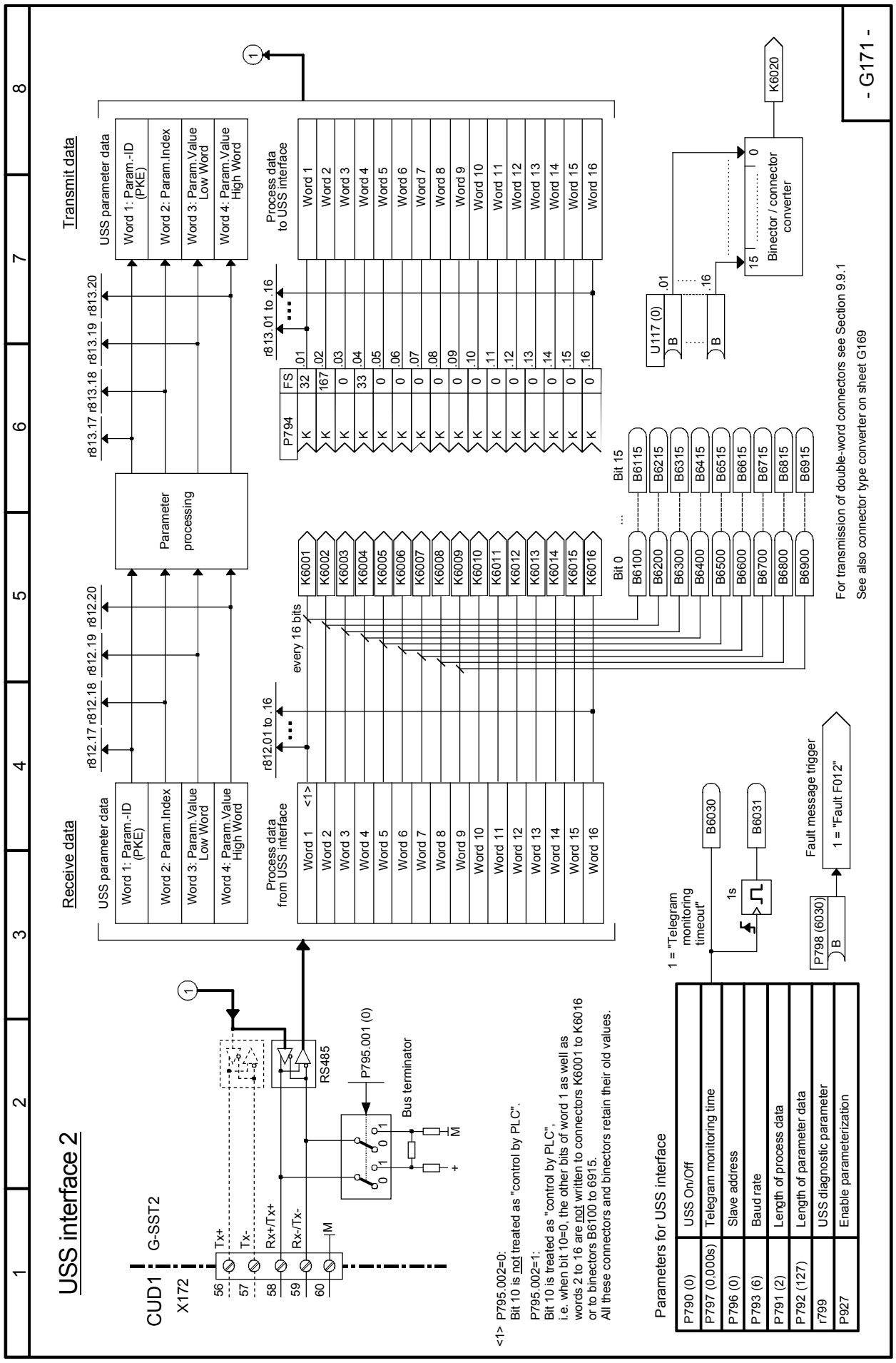

Sheet G172 USS interface 3

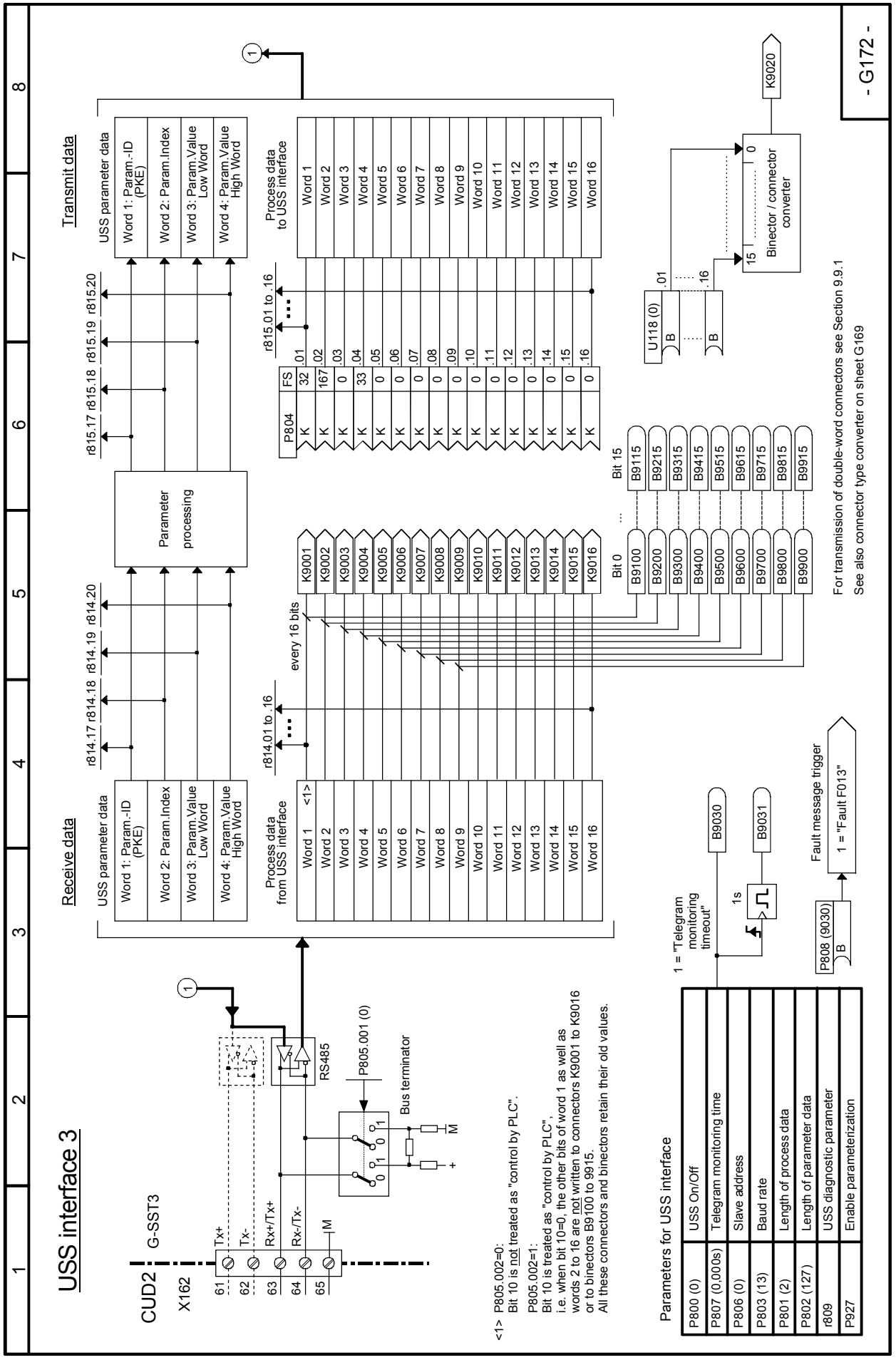

Sheet G173 Peer-to-peer interface 2

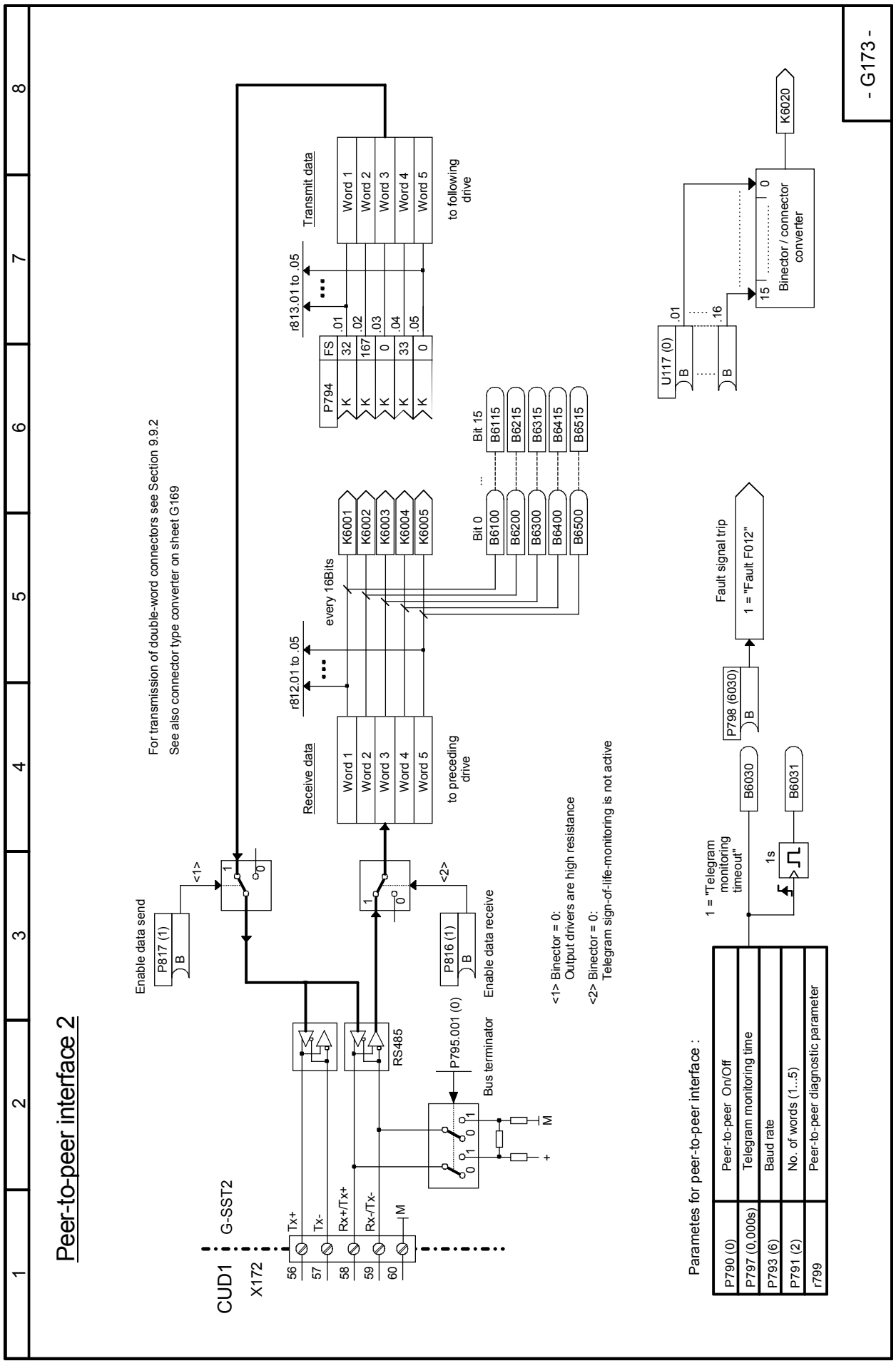

Sheet G174 Peer-to-peer interface 3

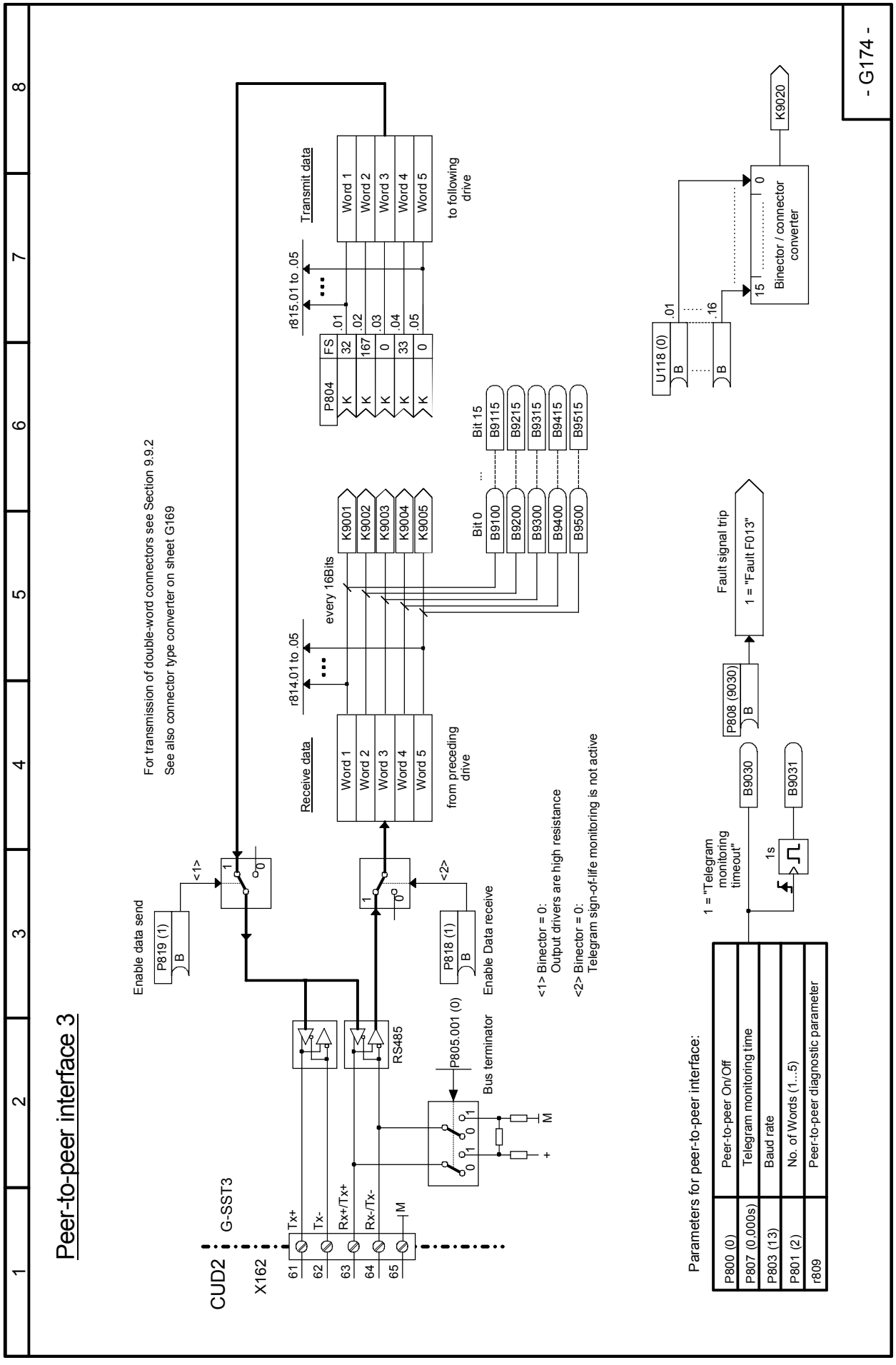

Sheet G175 Data sets

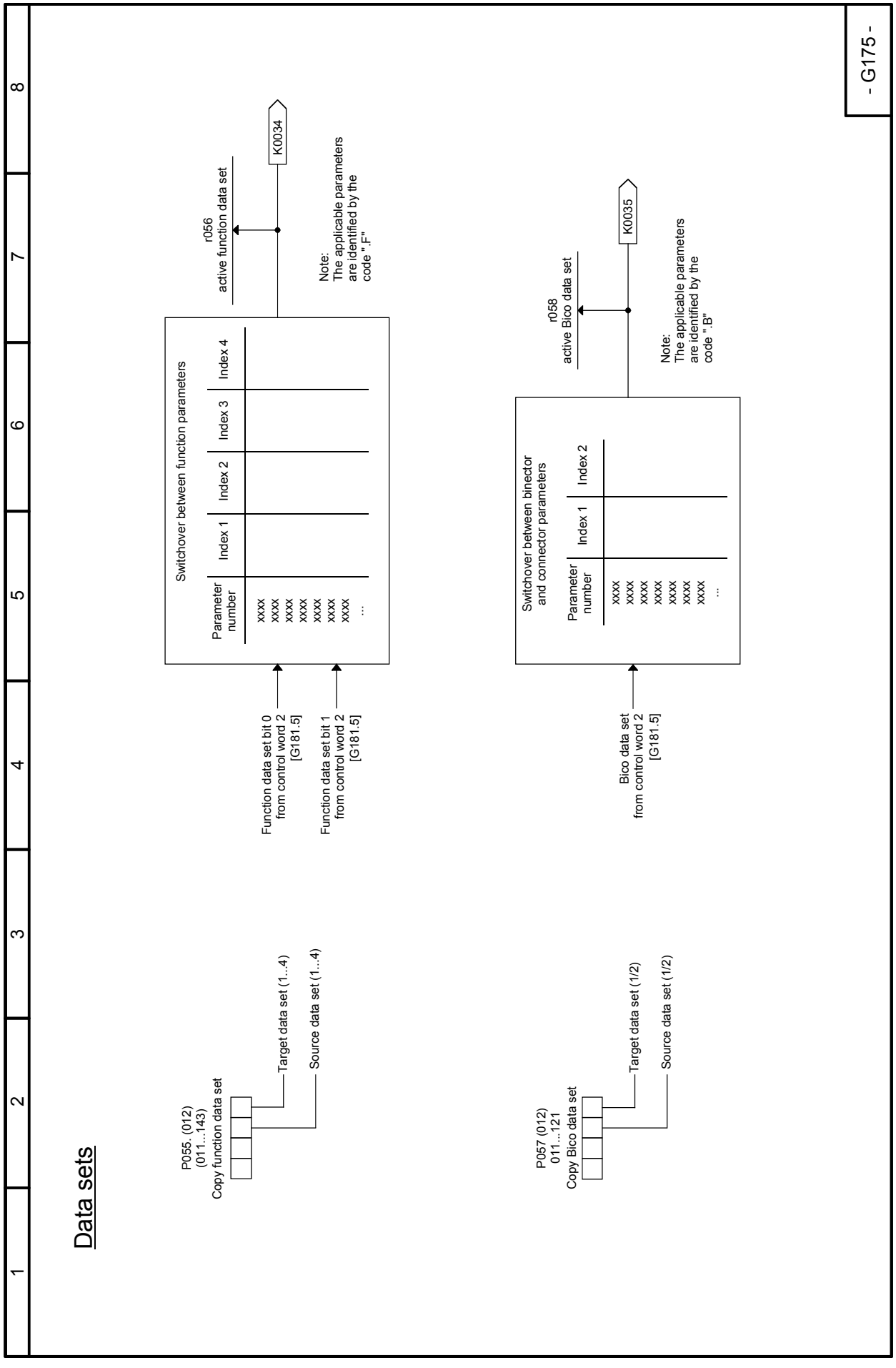

Sheet G180 Control word 1

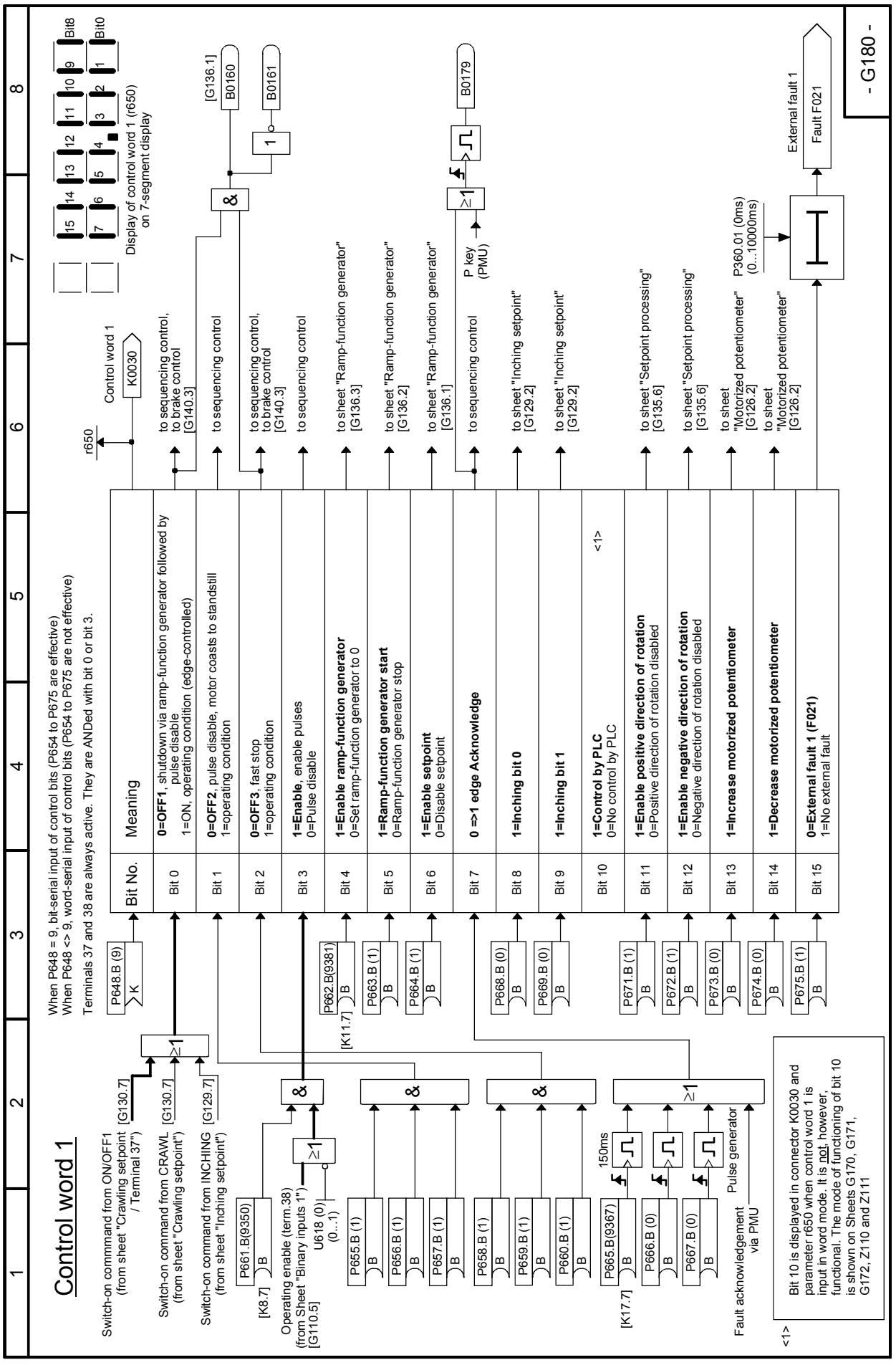

Sheet G181 Control word 2

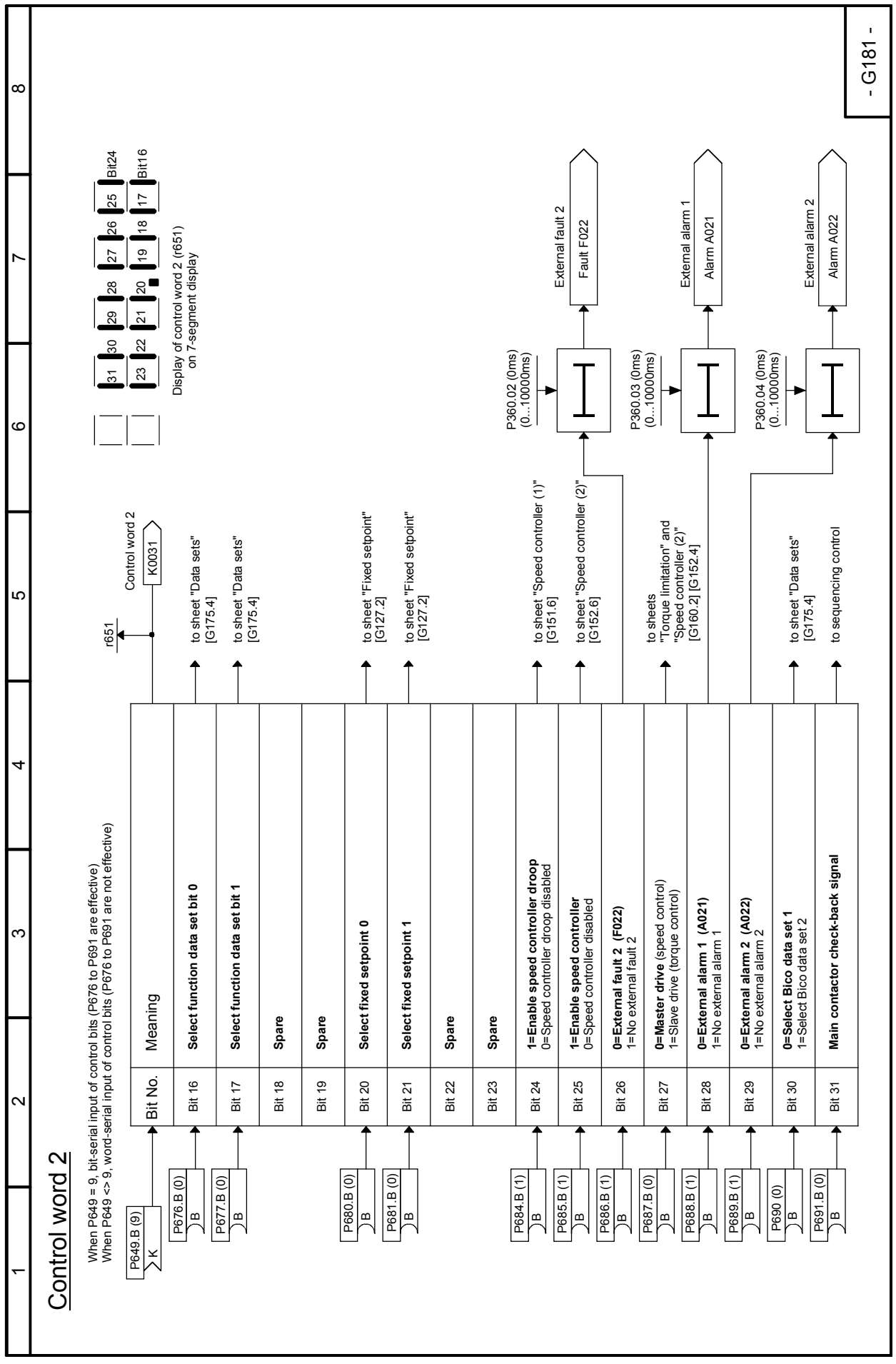

Sheet G182 Status word 1

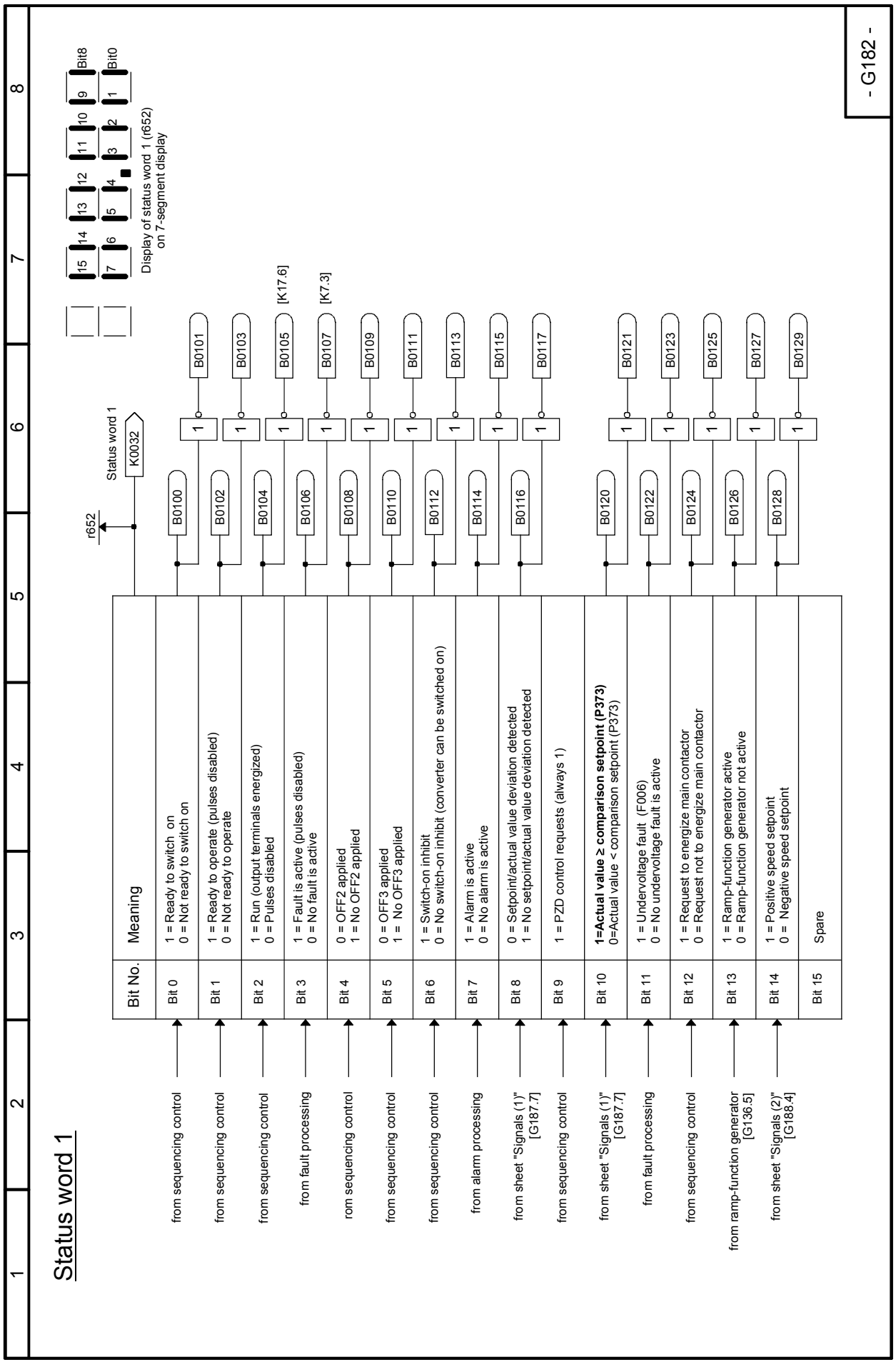

Sheet G183 Status word 2

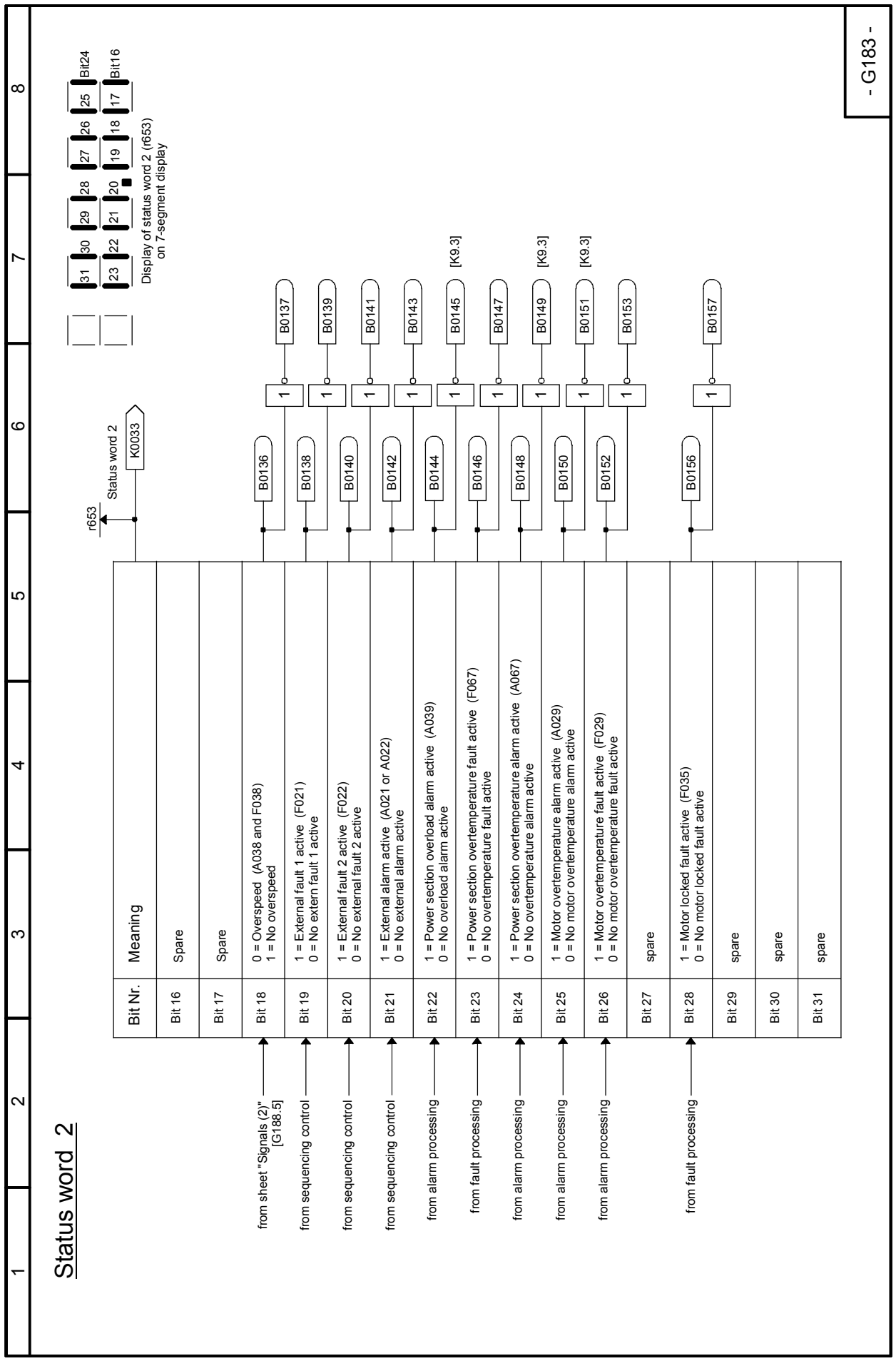

Sheet G185 Temperature sensor inputs

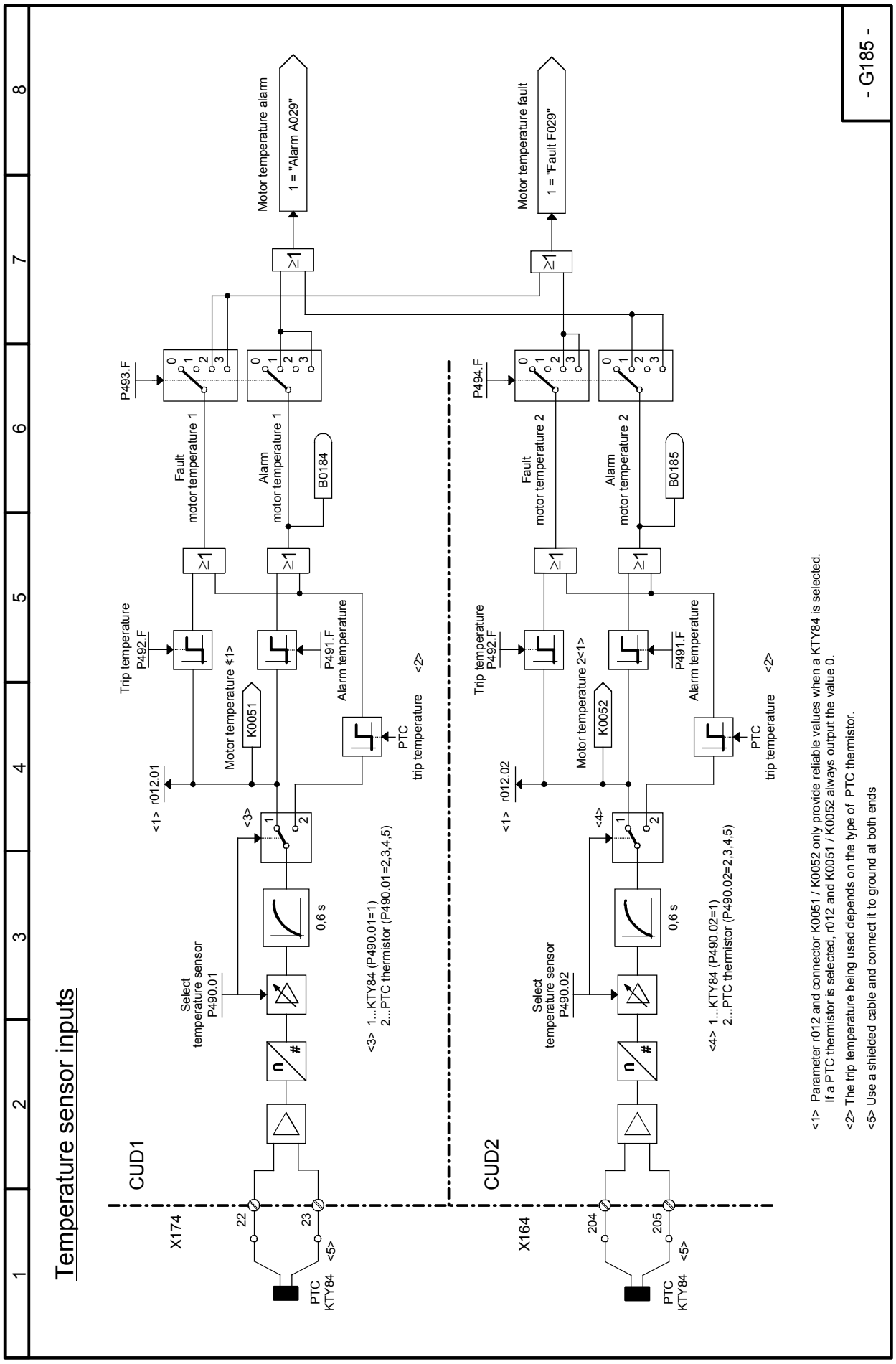

<1> Parameter r012 and connector K0051 / K0052 only provide reliable values when a KTY84 is selected. If a PTC thermistor is selected, r012 and K0051 / K0052 always output the value 0.
<2> The trip temperature being used depends on the type of PTC thermistor.
<5> Use a shielded cable and connect it to ground at both ends

Sheet G186 Binary inputs, terminals 211 to 214

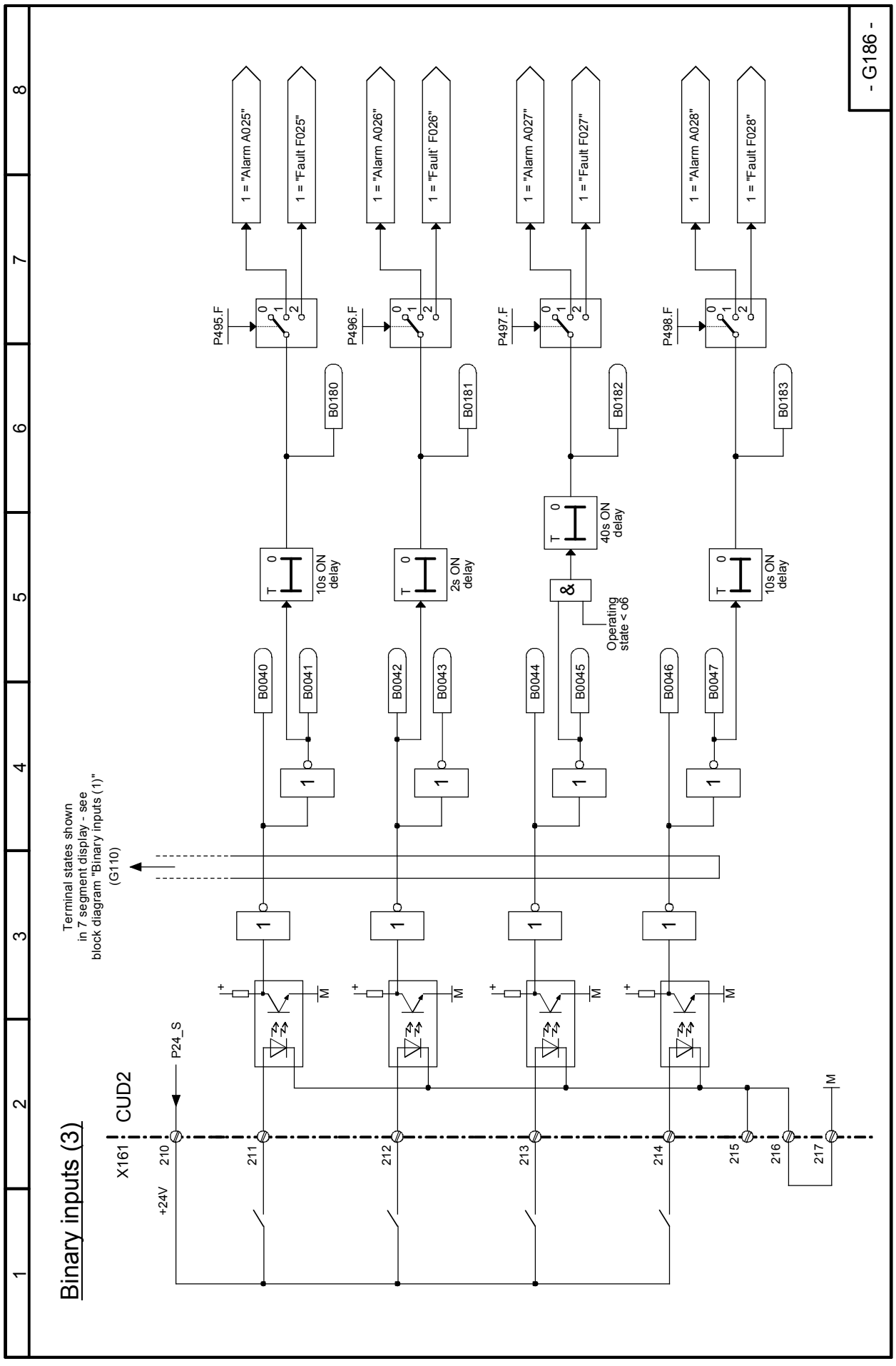

Sheet G187 Messages (1)

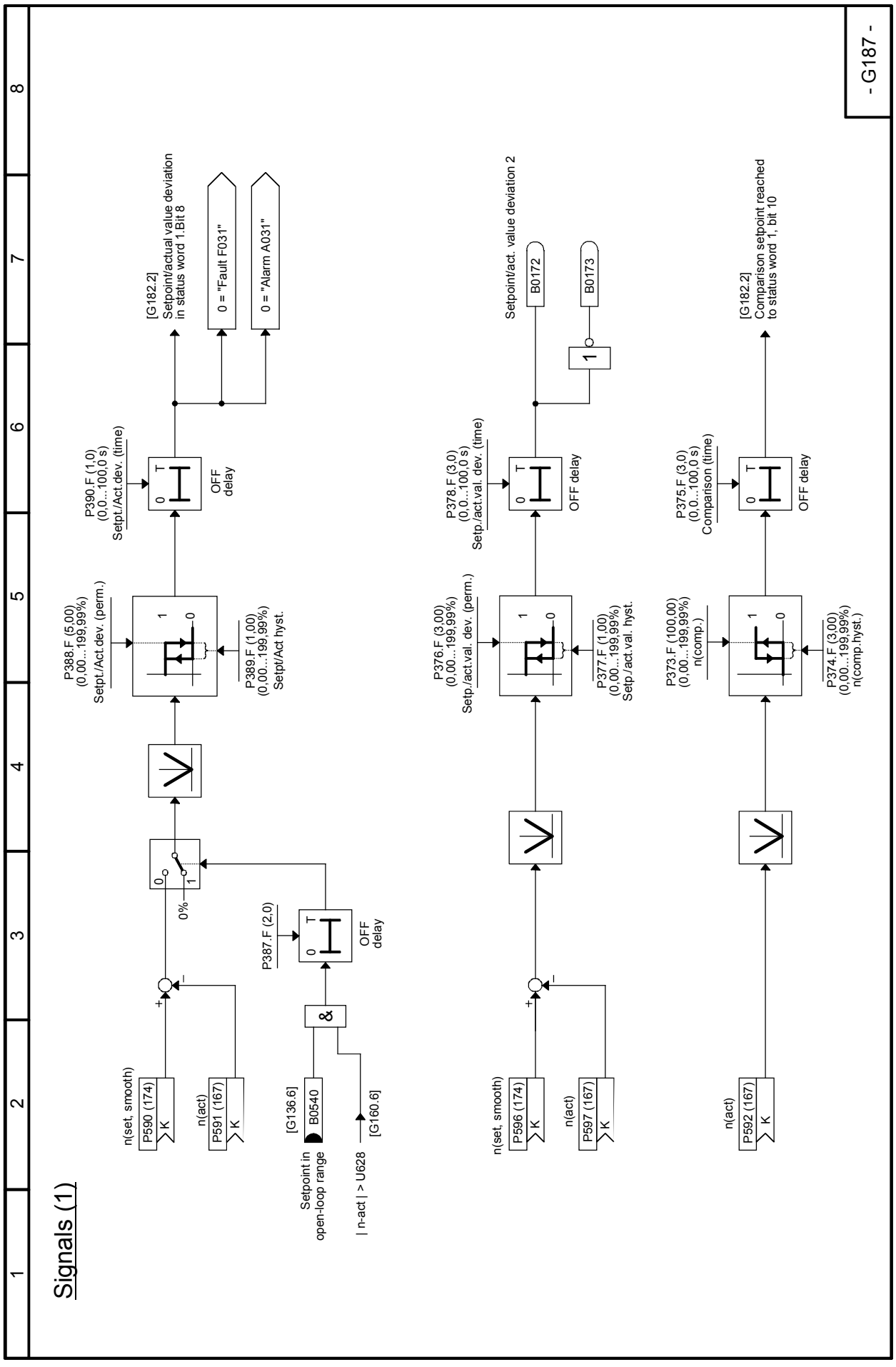

Sheet G188 Messages (2)

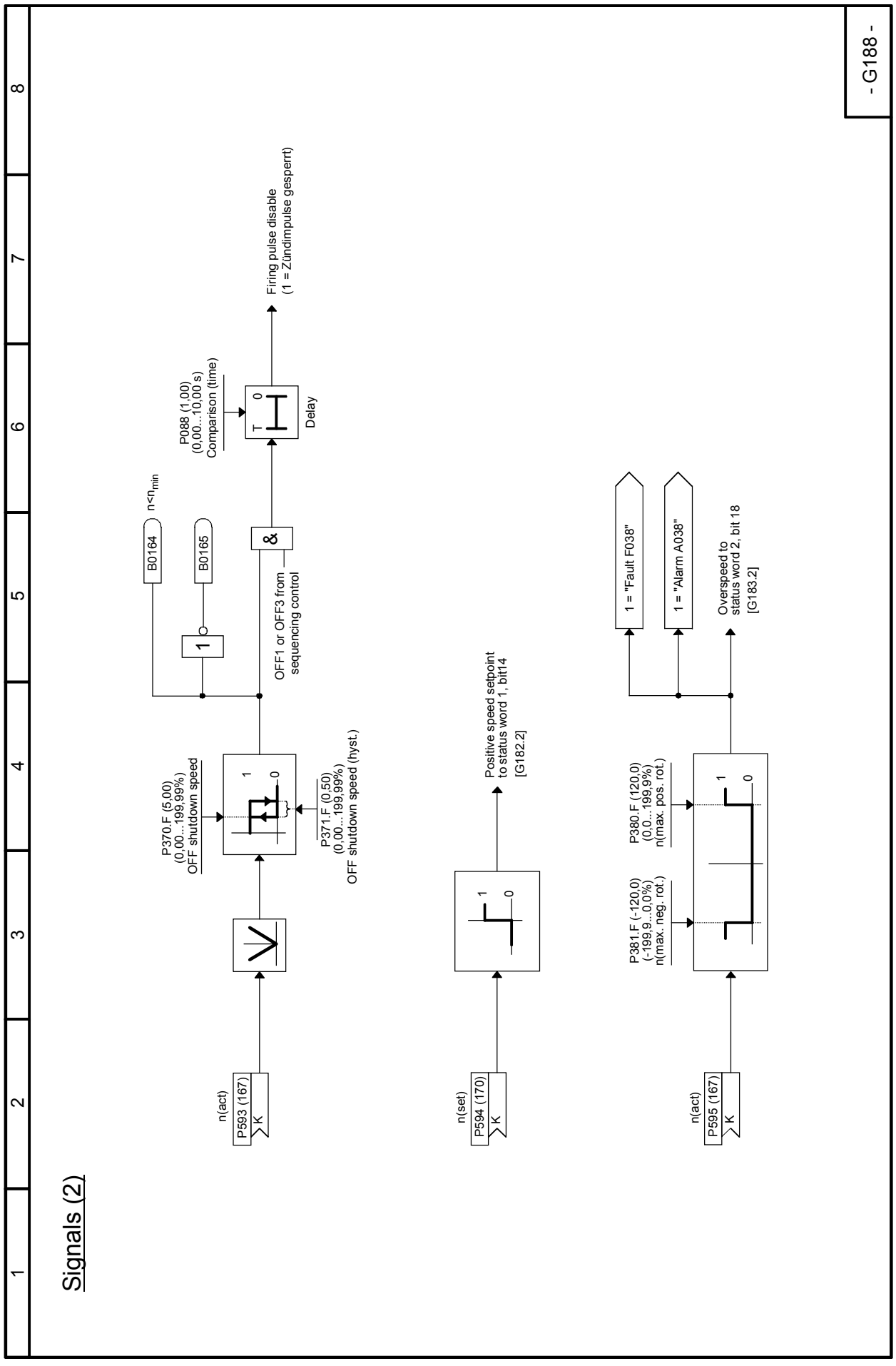

Sheet G189 Fault memory

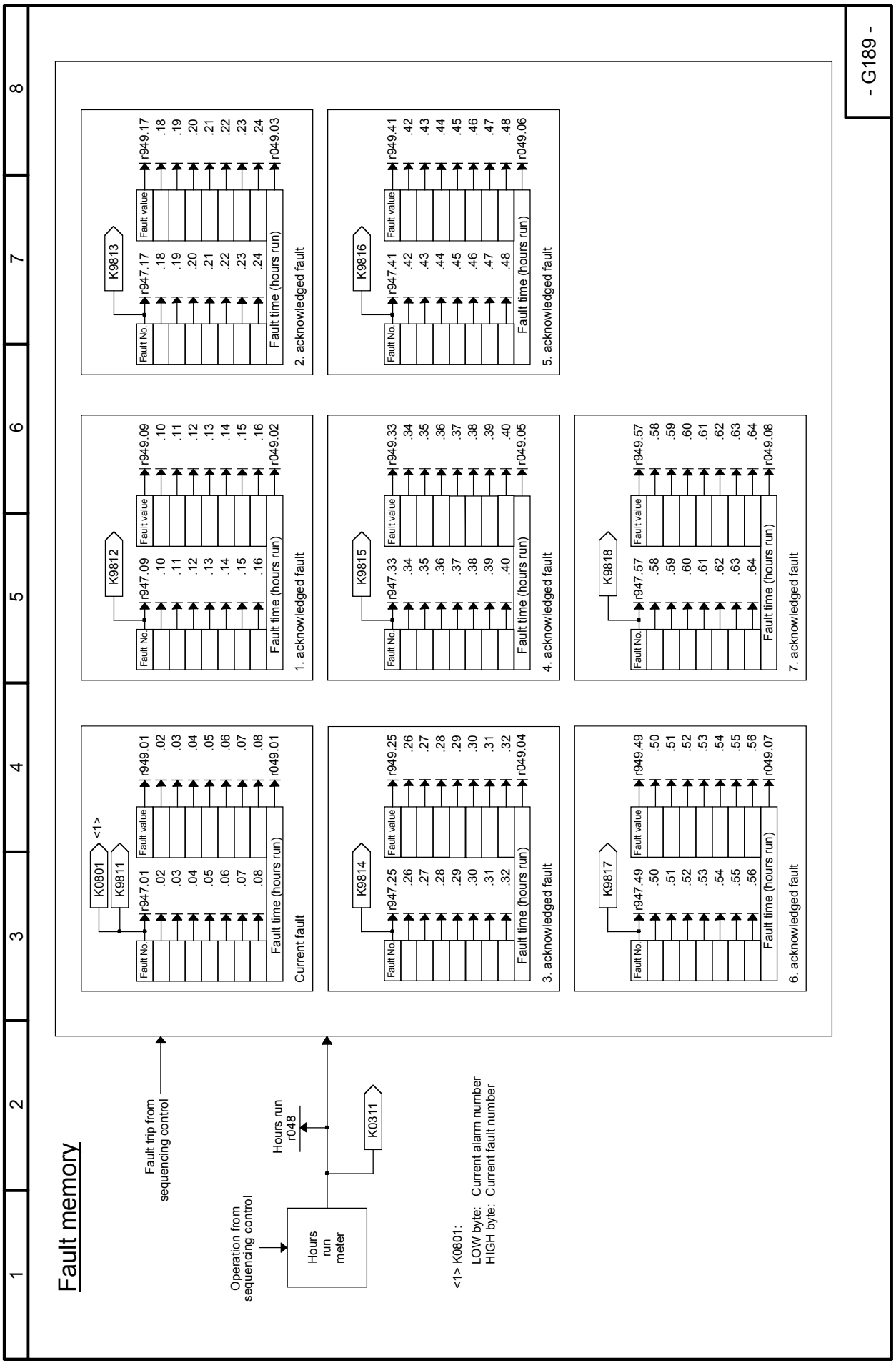

Sheet G195 Paralleling interface

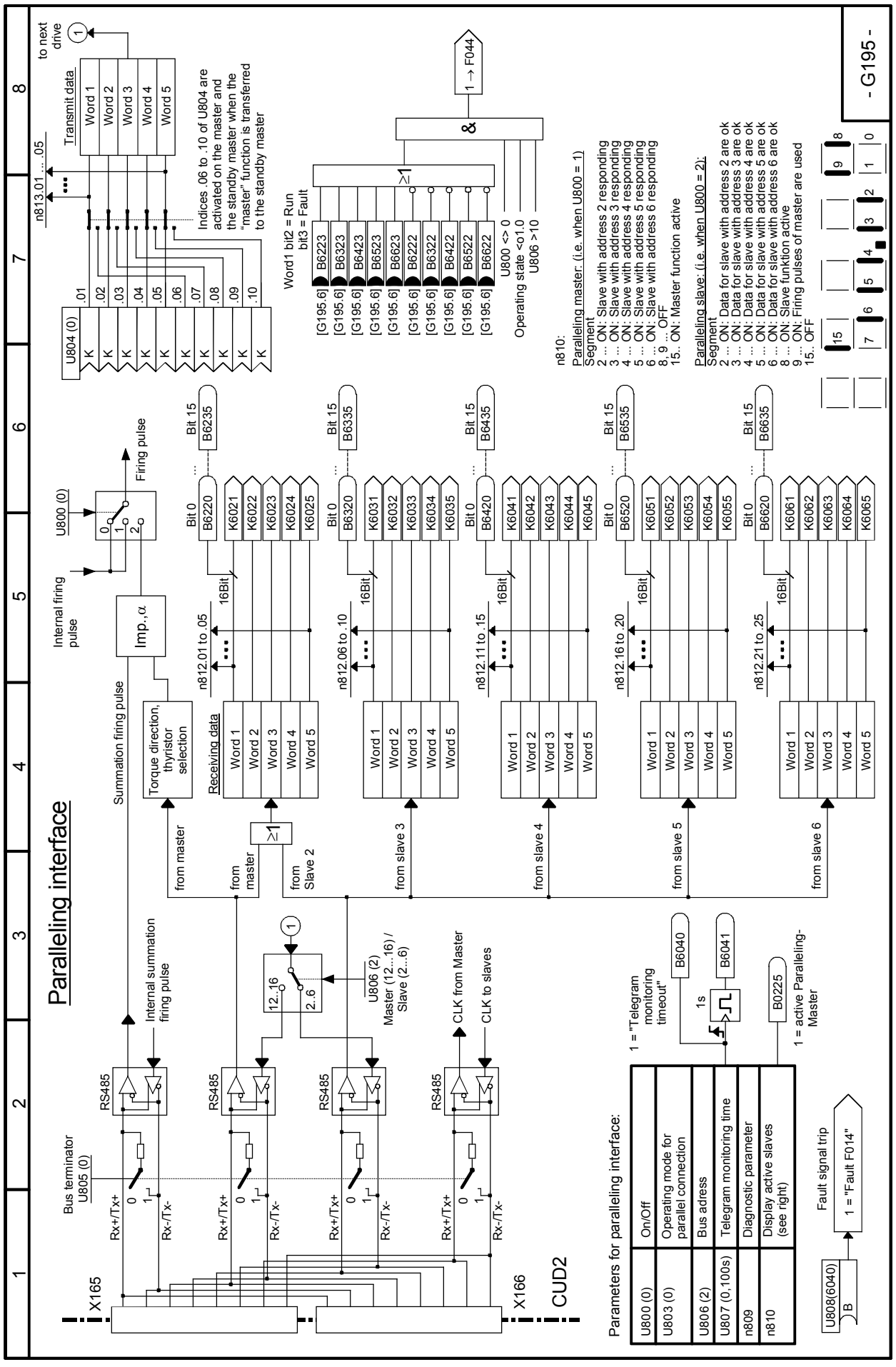

1	2	3	4	5	6	7	8

Contents of the freely assignable function blocks (technology software S00)

NOTICE Some of the freely assignable function blocks are wired through their parameter factory setting to the drive-specific (crane) control logic and are therefore not freely available

Content	Sheet
Startup of the technology software	B101
Fixed values	
100 Fixed values	B110
Monitoring	
1 Voltage monitor for electronics power supply	B110
Alarm, fault messages	
8 Alarm message triggers	B115
32 Fault message triggers	B115
Connector/binector converter	
3 Connector/binector converter	B120
3 Binector/connector converter	B121
Mathematical functions	
15 Adders/subtracters	B125
4 Sign inverters	B125
2 Switchable sign inverters	B125
12 Multipliers	B130
6 Dividers	B131
3 High-resolution multipliers/dividers	B131
4 Absolute-value generator with filtering	B135
Limiters, limit-value monitors	
3 Limiters	B134
3 Limiters	B135
3 Limit-value monitors with filtering	B136
4 Limit-value monitors without filtering	B137
3 Limit-value monitors without filtering	B138
Processing of connectors	
4 Averagers	B139
4 Maximum selections	B140
4 Minimum selections	B140
2 Tracking/storage elements	B145
2 Connector memories	B145
15 Connector changeover switches	B150
High-resolution blocks	
2 limit-value monitors (for double connectors)	B151
2 connector-type converters	B151
2 adders/subtracters (for double connectors)	B151
1 Position/positional deviation acquisition	B152
1 Root extractor	B153
Control elements	
3 Integrators	B155
3 DT1 elements	B155
10 Derivative/delay elements (LEAD / LAG blocks)	B156 - B158
Characteristics	
9 Characteristic blocks	B160
3 Dead zones	B161
1 Setpoint branching	B161
Ramp function generator	
1 Simple ramp function generator	B165
Controllers	
1 Technology controller	B170
10 PI controllers	B180 - B189
Velocity/speed controller, variable moment of inertia	
1 Velocity/speed calculator	B190
1 Speed/velocity calculator	B190
1 Calculation of variable inertia	B191
Multiplexer for connectors	
3 Multiplexers	B195
Counter	
1 16-bit software counter	B196
Logic functions	
2 Decoders/demultiplexers binary to 1 from 8	B200
28 AND elements with 3 inputs each	B205
20 OR elements with 3 inputs each	B206
4 EXCLUSIVE OR elements with 2 inputs each	B206
16 Inverters	B207
12 NAND elements with 3 inputs each	B207
14 RS flipflop	B210
4 D flipflop	B211
10 Timers	B215, B216
5 Binary signal selector switches	B216

1	2	3	4	5	6	7	8

Startup of the freely assignable function blocks

NOTICE Some of the freely assignable function blocks are wired through their parameter factory setting to the drive-specific (crane) control logic and are therefore not freely available

1. Setting and activating the sampling times

For each function block, it is necessary to define in which "time slice" (i.e. with which sampling time) it is processed.
(Note: In the factory setting of the parameters, all existing function blocks are activated)

5 time slices are available:

Time slice	Sampling time	
1	1 * T0 (firing-pulse-synchronous time slice)	<1>
2	2 * T0 (firing-pulse-synchronous time slice)	<1>
4	4 * T0 (firing-pulse-synchronous time slice)	<1>
10	20 ms (**not** firing-pulse-synchronous)	
20	Block is **not** calculated	<2>

<1> T0 = Mean distance between 2 firing pulses
T0 = 3.33 ms at 50 Hz line frequency
T0 = 2.78 ms at 60 Hz line frequency

<2> All function blocks for which a time slice <20 is set are activated

(287) = function block number

Function block No.	Setting with parameter
1	U950.01
2	U950.02
.	.
.	.
99	U950.99
100	U950.100
101	U951.01
102	U951.02
.	.
.	.
199	U951.99
200	U951.100
201	U952.01
202	U952.02
.	.
.	.
299	U952.99
300	U952.100

The sampling times must be chosen in such a way that the maximum processor load (n009.02) is indicated on average as <90%.

2. Execution sequence

The execution sequence of the function blocks can be defined with parameters U960, U961, and U962.

3. Automatic setting

The execution sequence of the function blocks and their activation can also be made automatic:

U969 = 1: Restore standard sequence
U960, U961, and U962 are set to the factory setting

= 2: Set optimum sequence
U960, U961, and U962 are set in such a way that as few deadtimes as possible occur

= 3: Set standard setting of the sampling times. U950, U951, and U952 are set to the factory setting!

= 4: Automatic activation/deactivation
U950, U951, and U952 are set in such a way that the unwired function blocks are deselected and the wired function blocks are selected (activated), if they are not yet selected.
The time slice 10 (sampling time 20 ms) is set for all function blocks not previously activated, unchanged for all previously activated function blocks.

Sheet B110 Voltage monitor for electronics power supply, fixed values

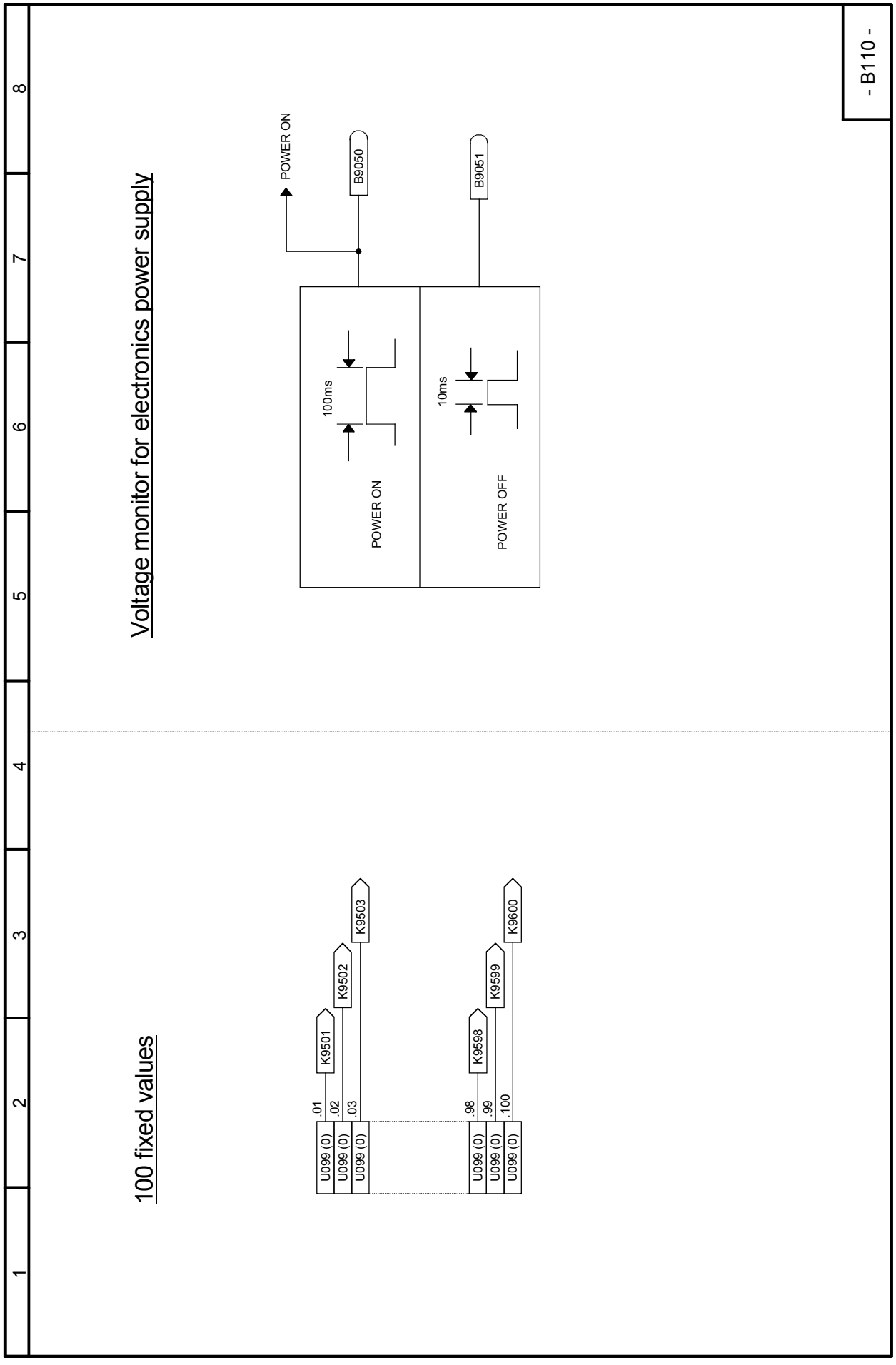

Sheet B115 Fault message triggers, alarm message triggers

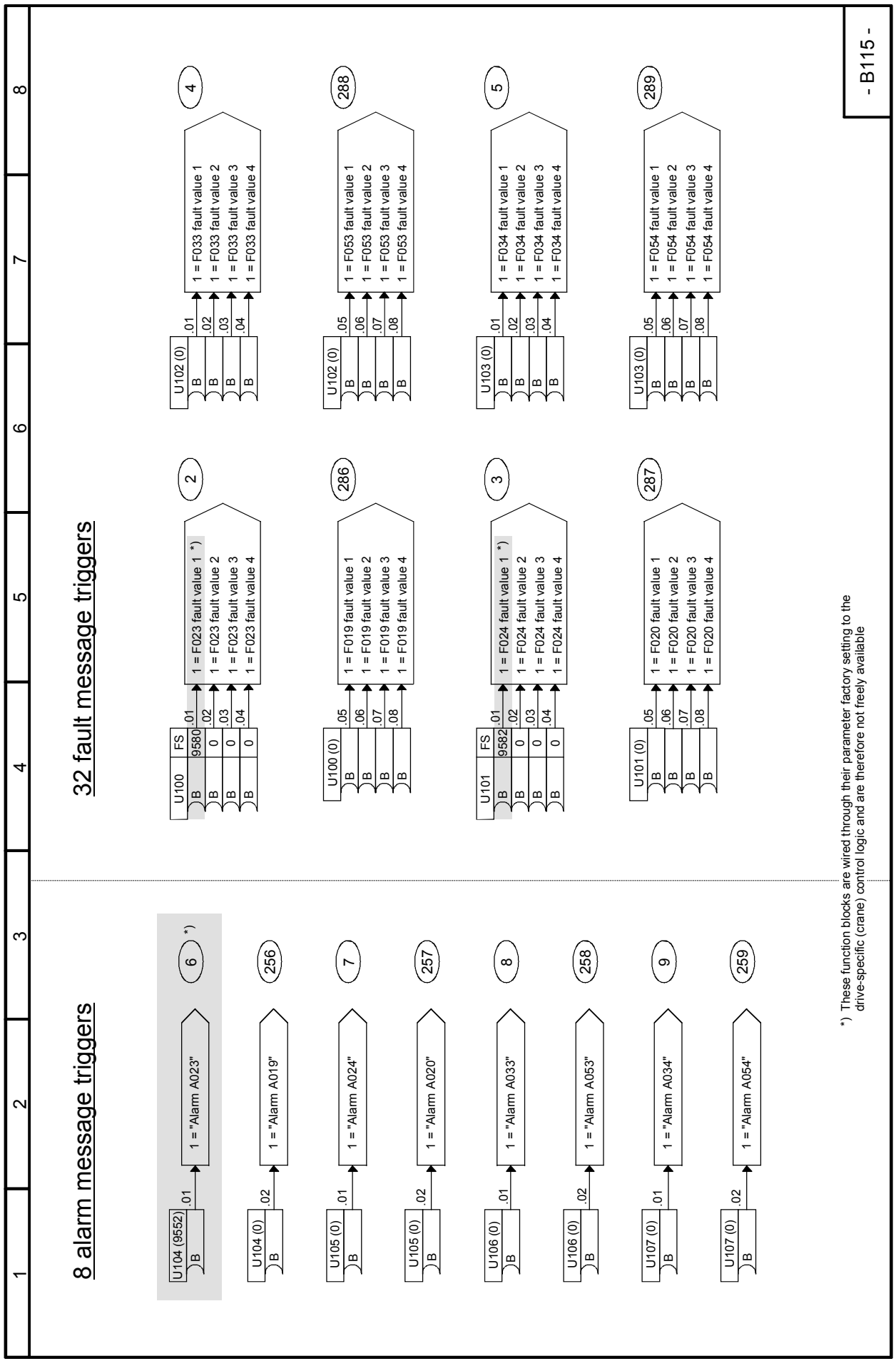

Sheet B120 Connector / binector converters

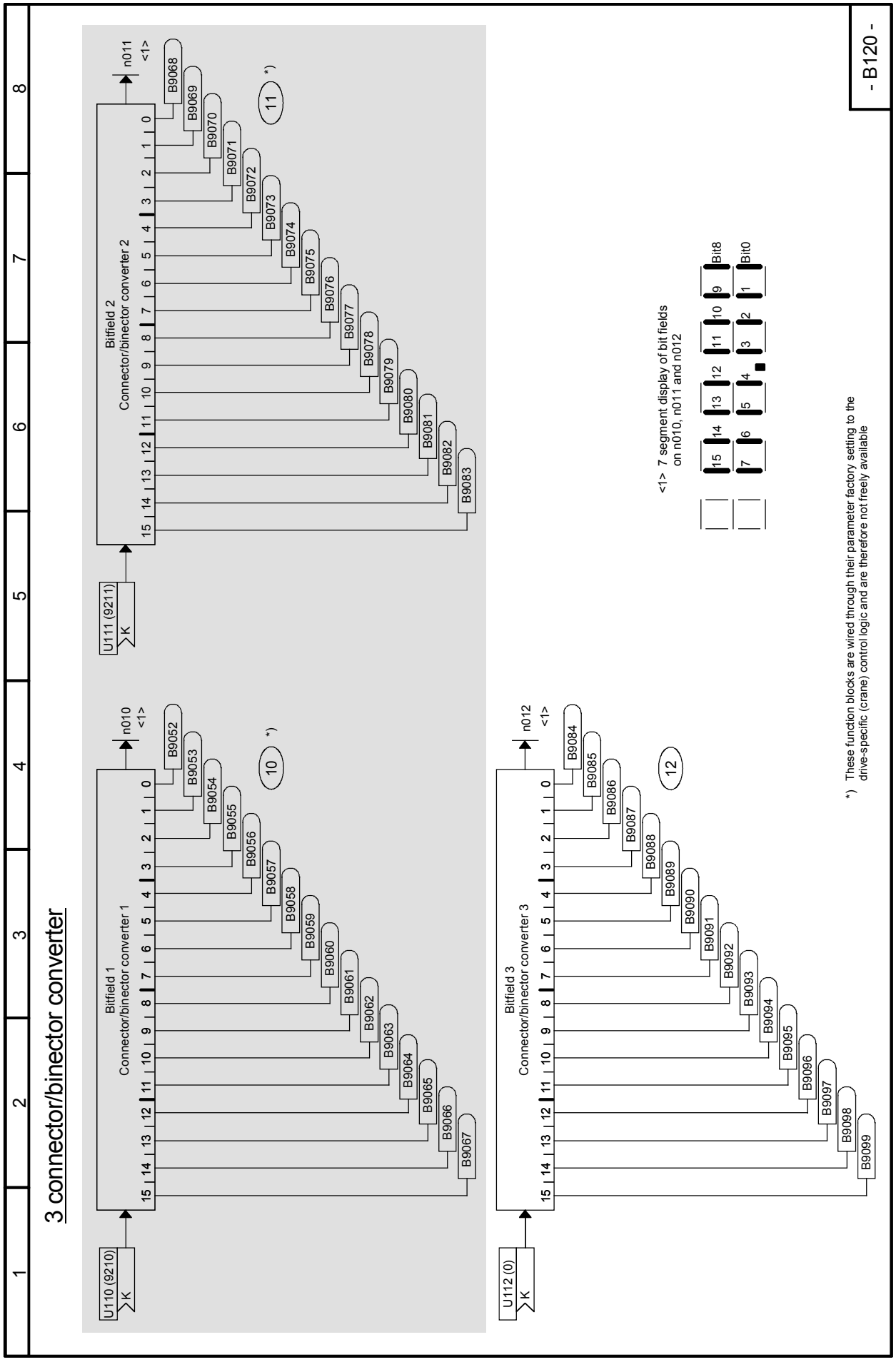

Sheet B121 Binector / connector converters

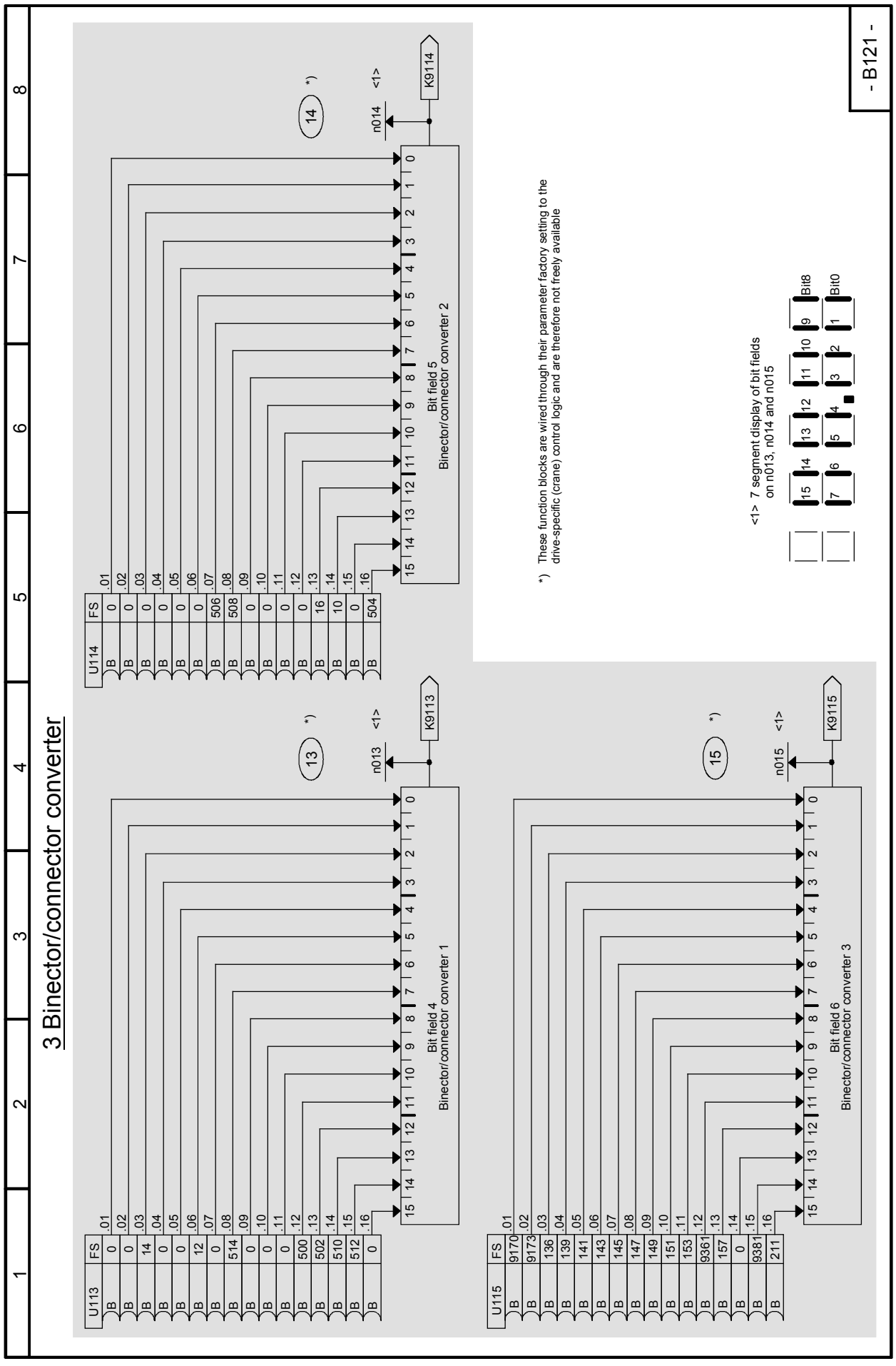

Sheet B125 Adders / subtractors, sign inverters

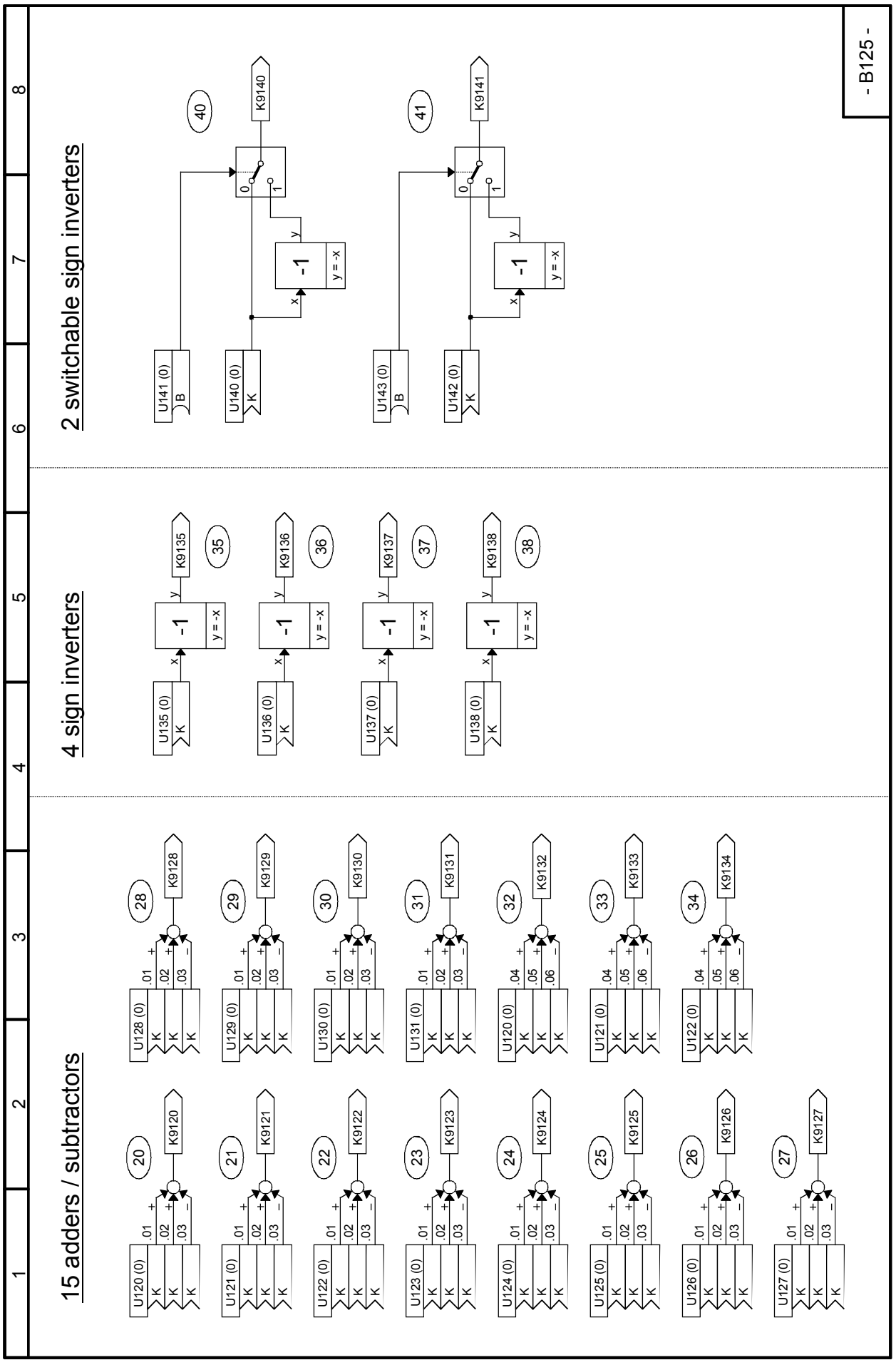

Sheet B130 Multipliers

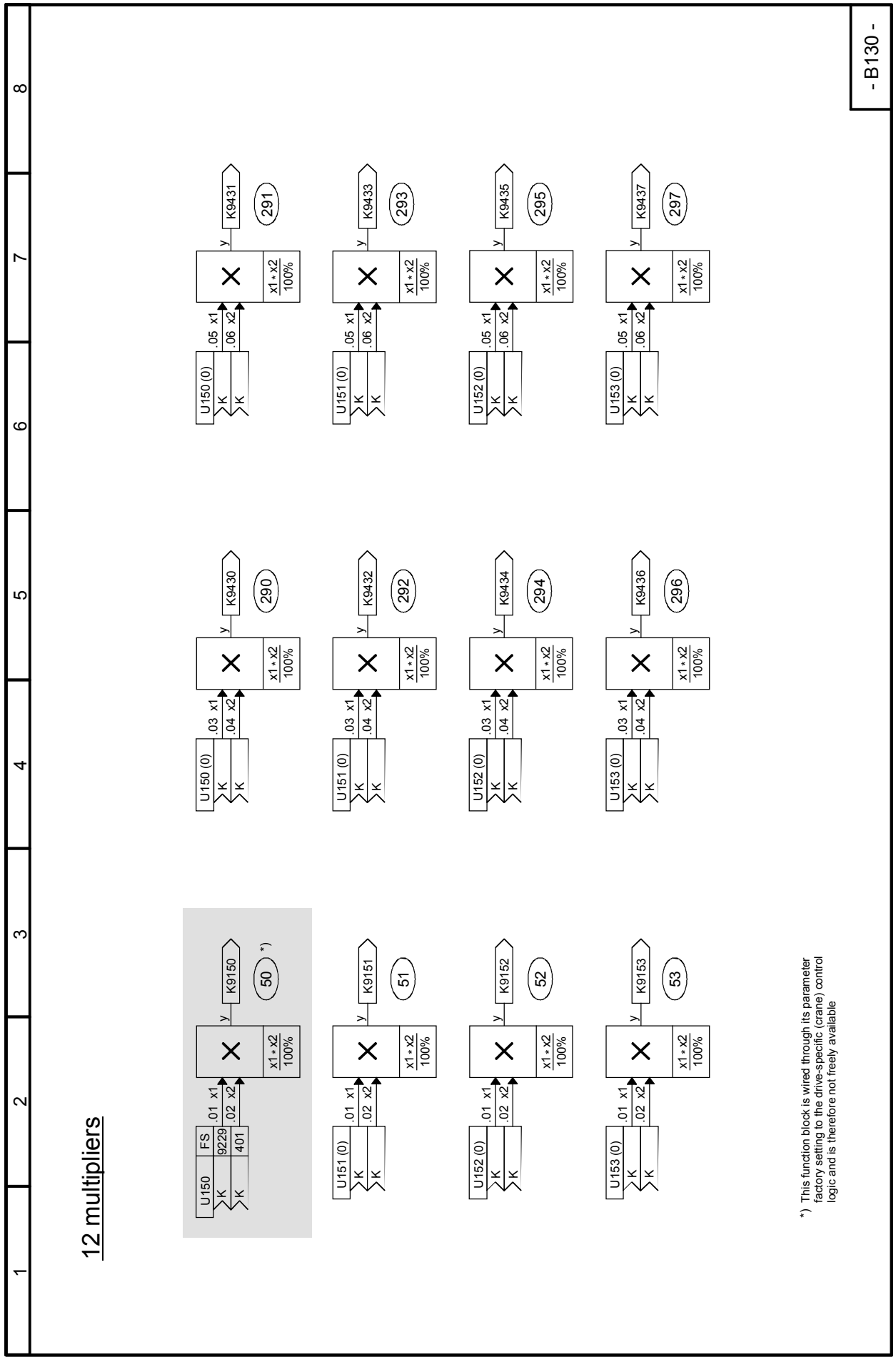

Sheet B131 Dividers, High-resolution multipliers / dividers

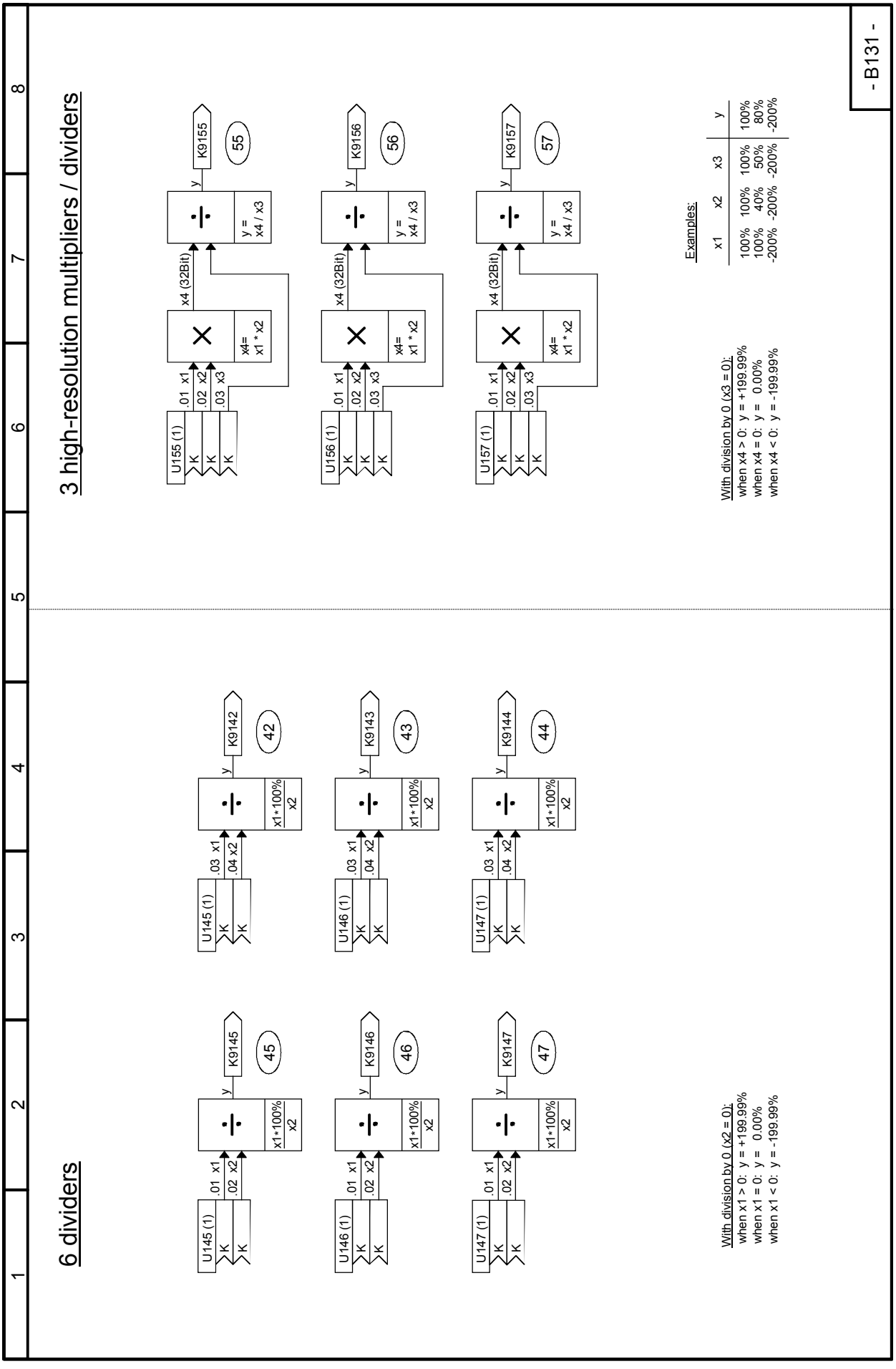

Sheet B134 Limiters

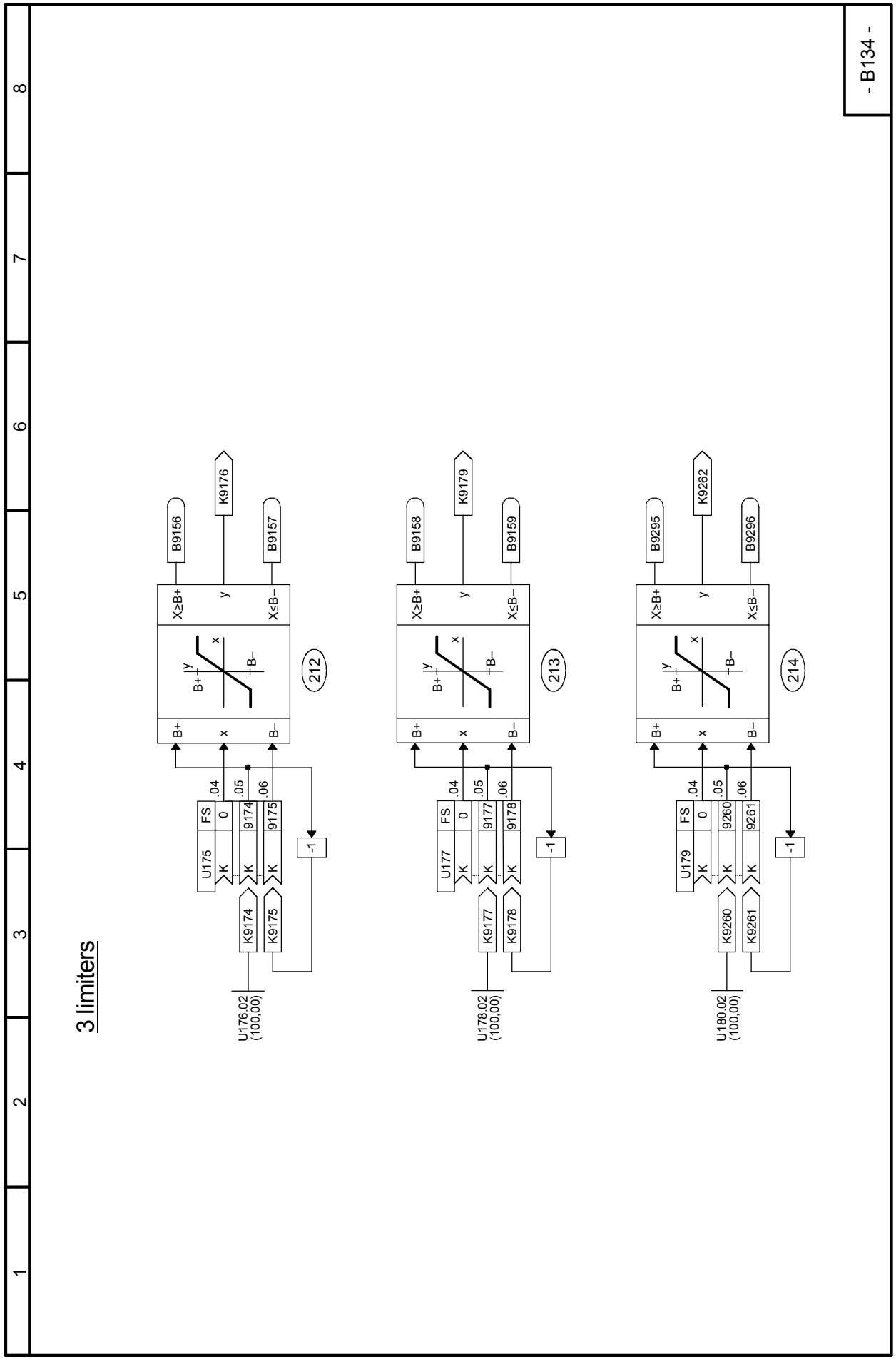

Sheet B135 Absolute-value generators with filter, limiters

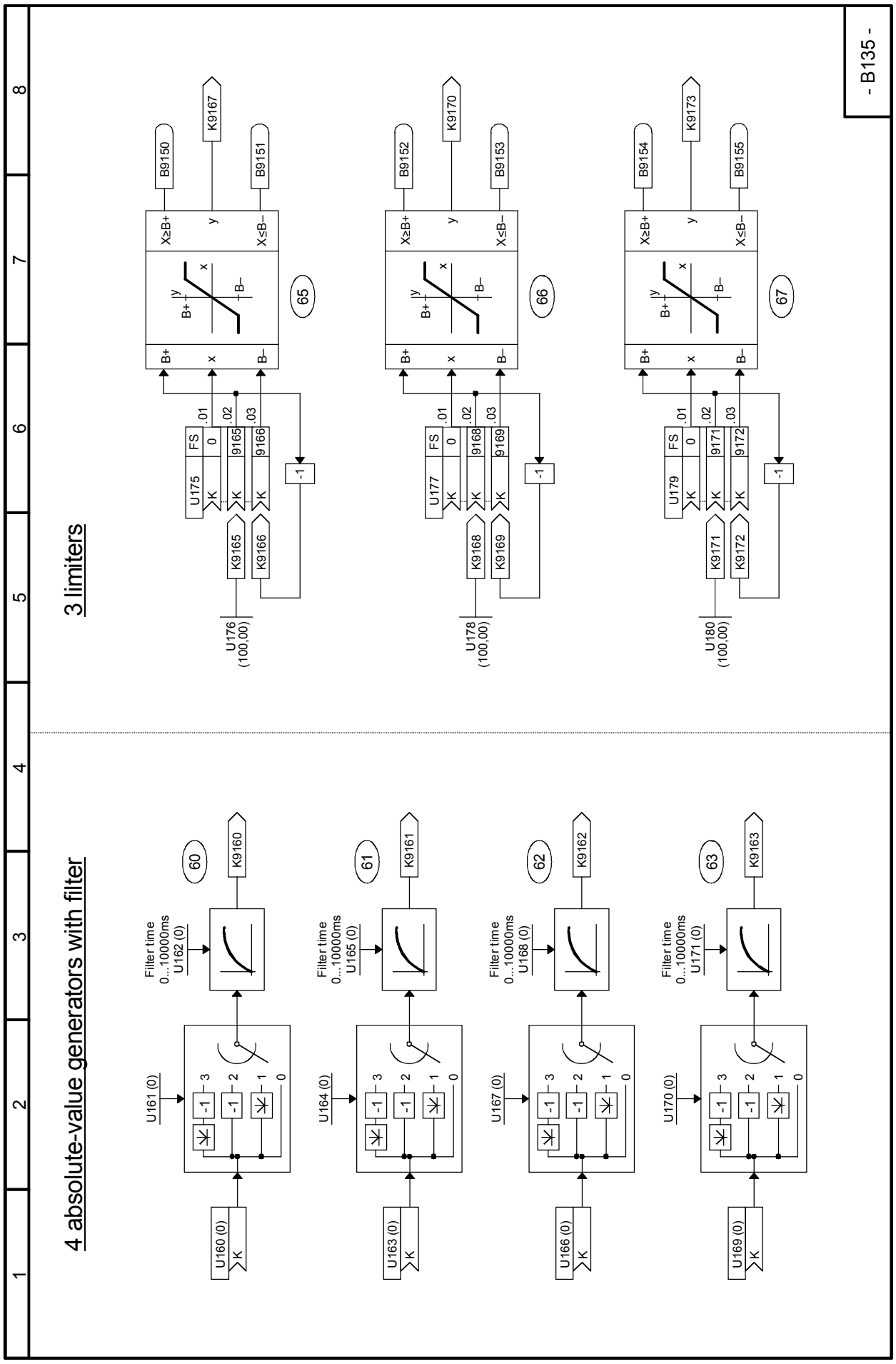

Sheet B136 Limit-value monitors with filter

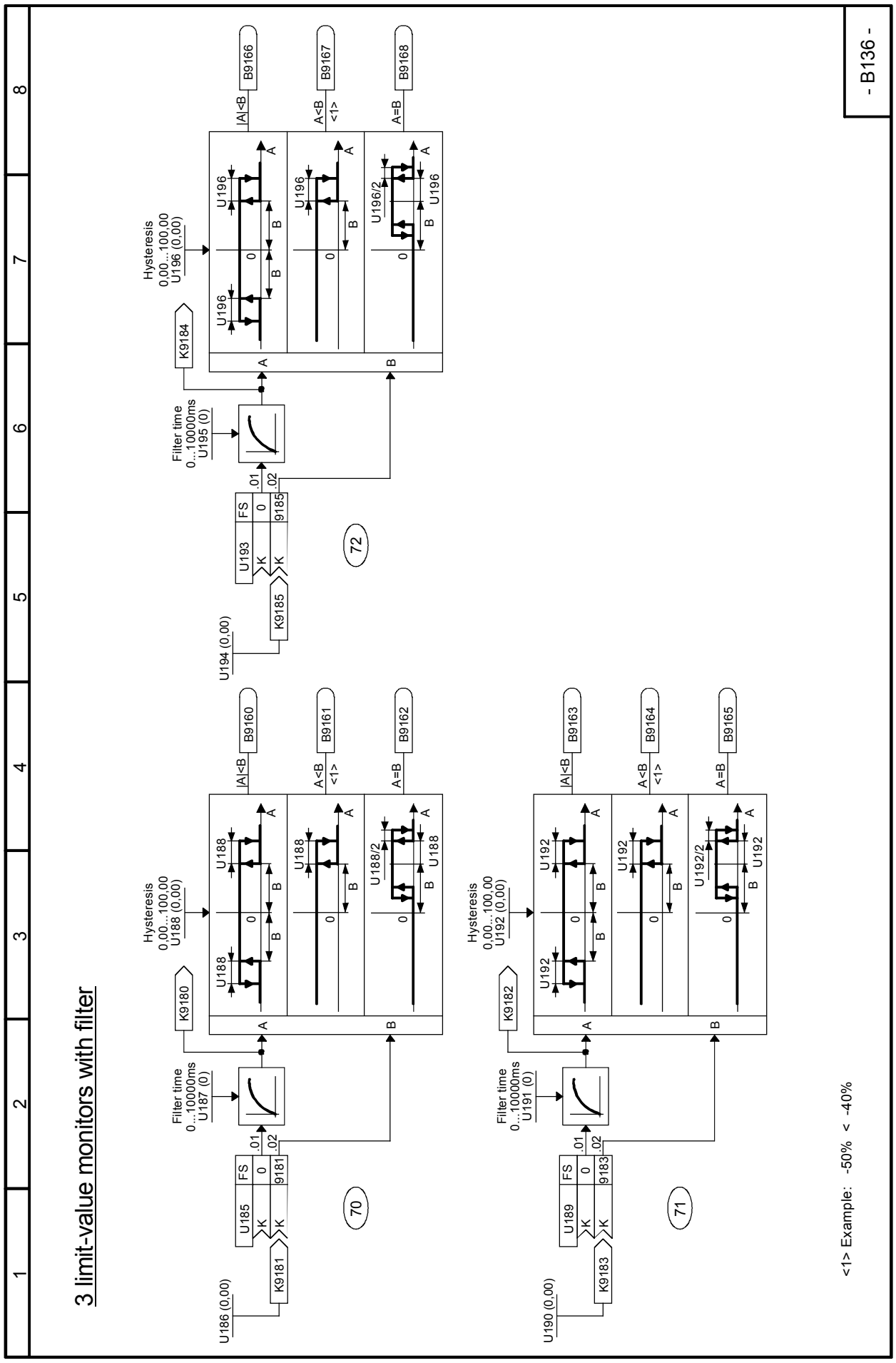

Sheet B137 Limit-value monitors without filter

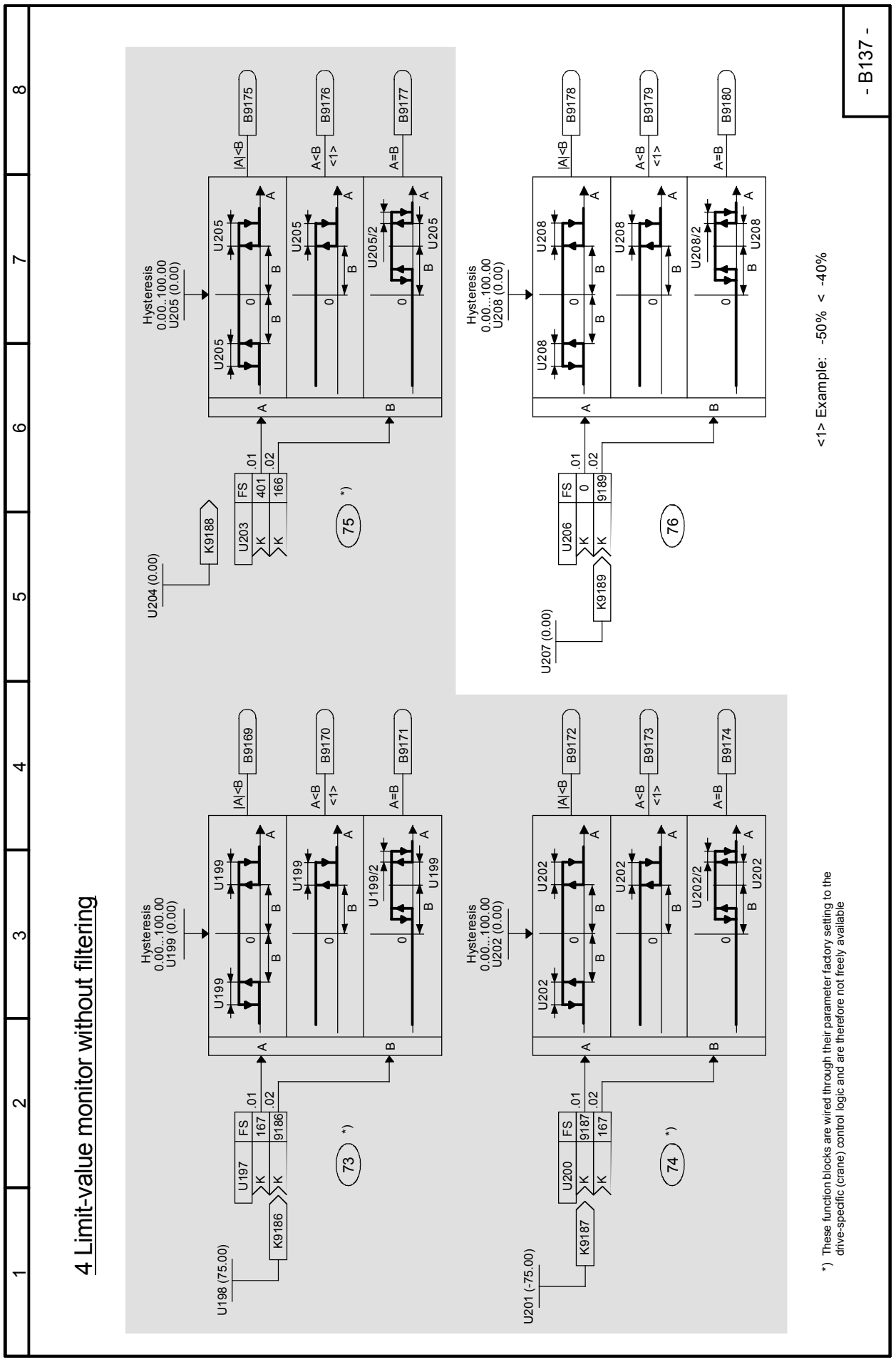

Sheet B138 Limit-value monitors without filter

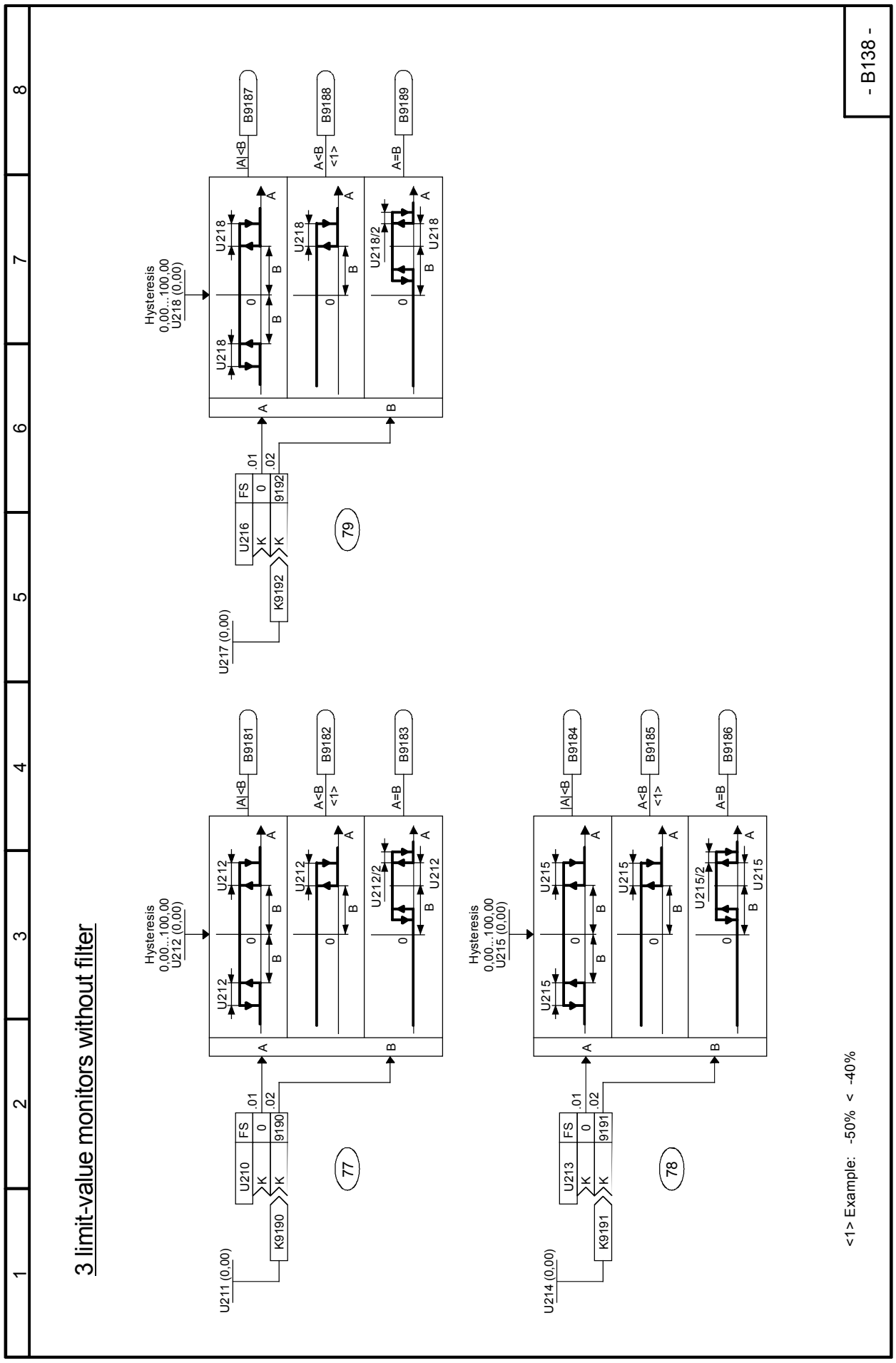

Sheet B139 Averagers

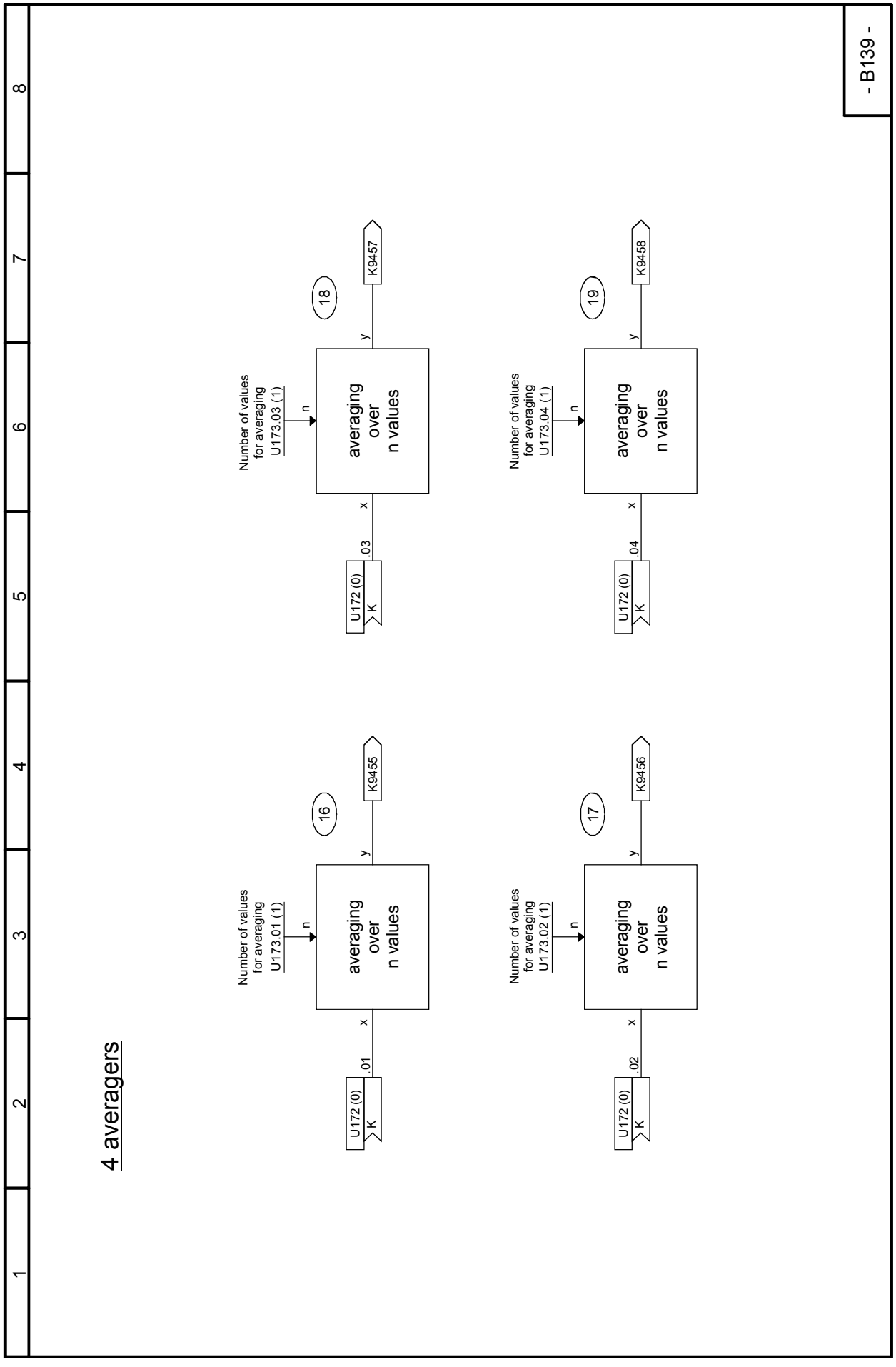

Sheet B140 Maximum selections, minimum selections

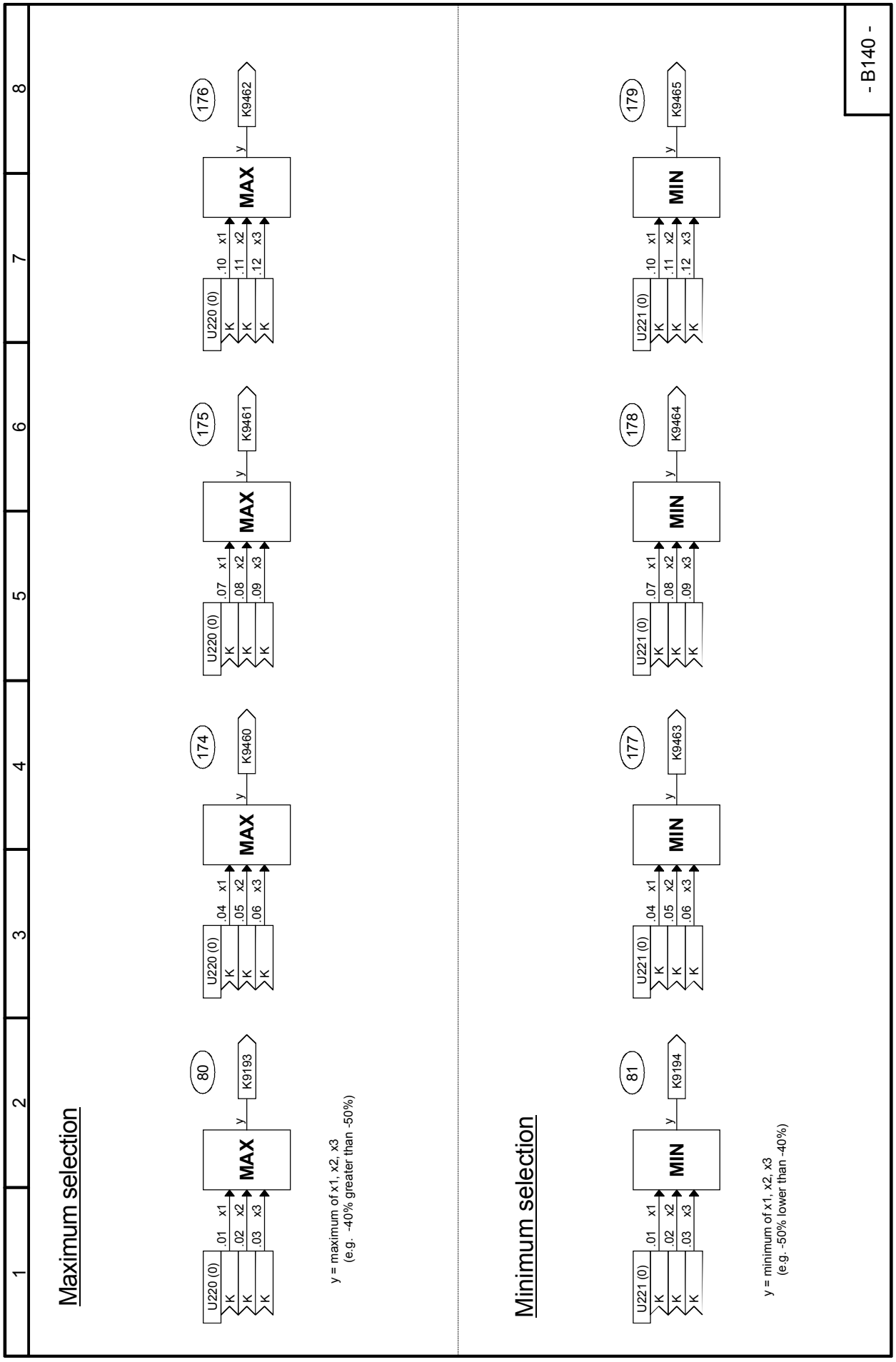

Sheet B145 Tracking / storage elements, connector memories

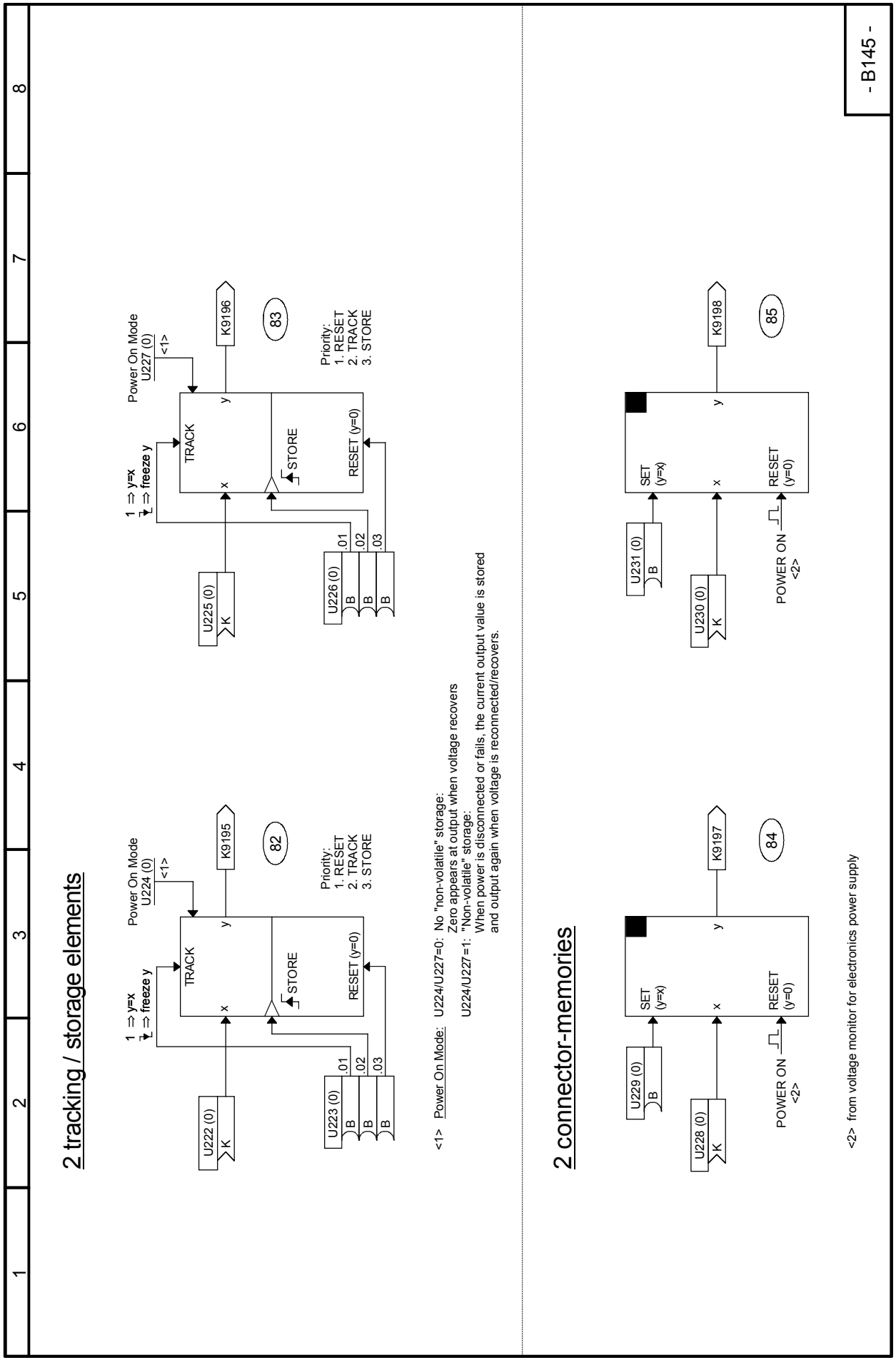

Sheet B150 Connector changeover switches

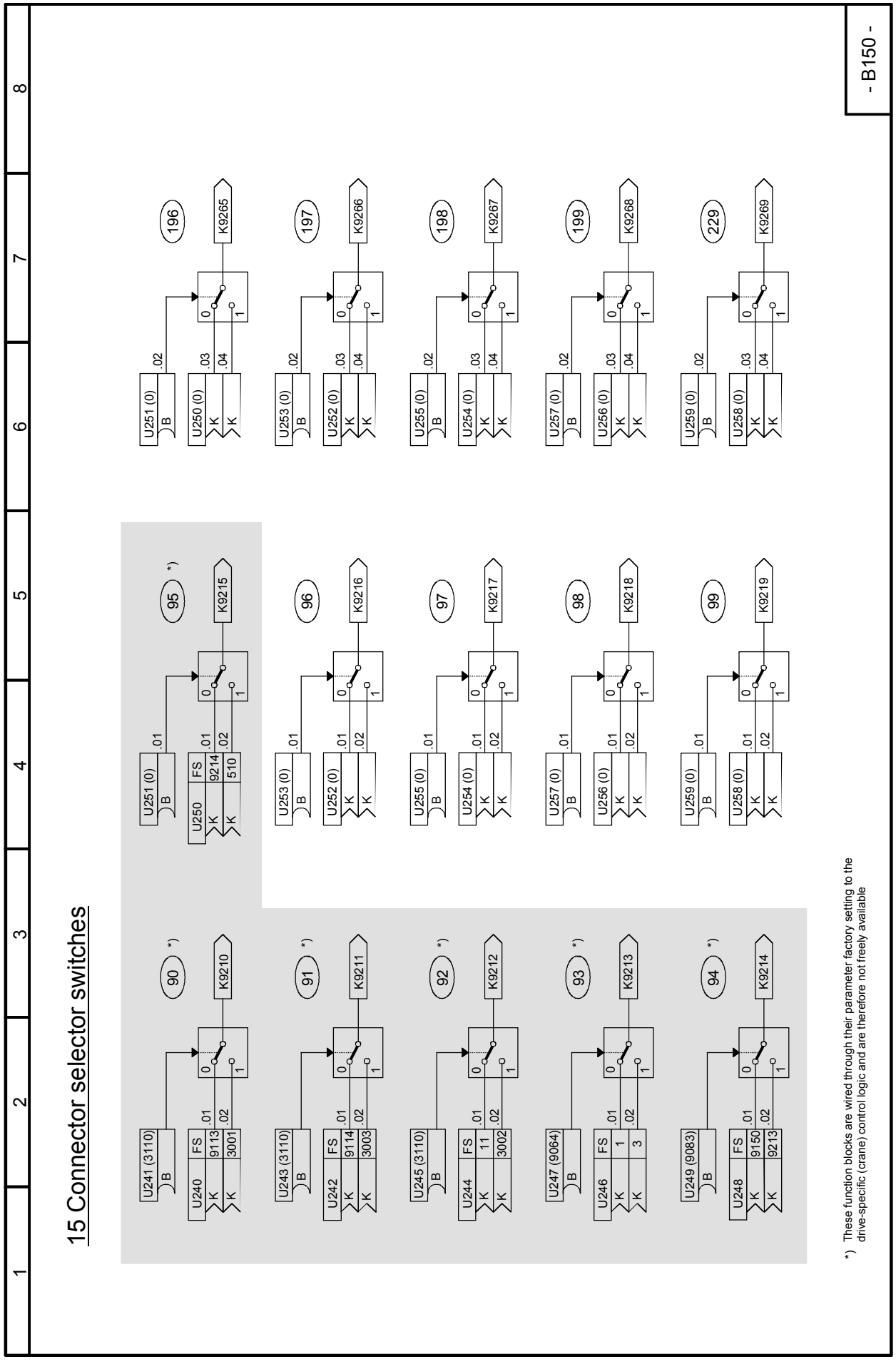

Sheet B151 High-resolution blocks

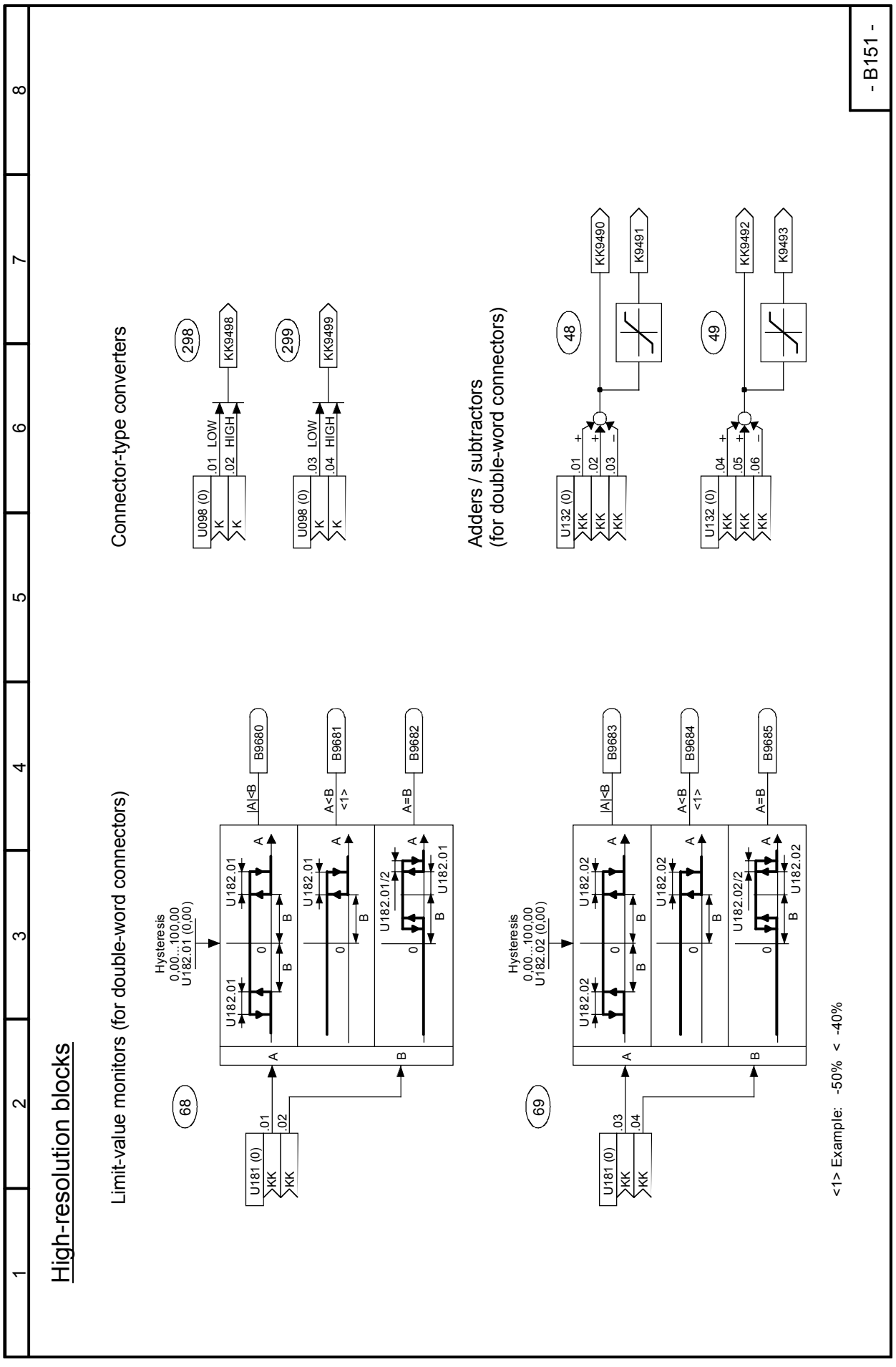

Sheet B152 Position/positional deviation acquisition

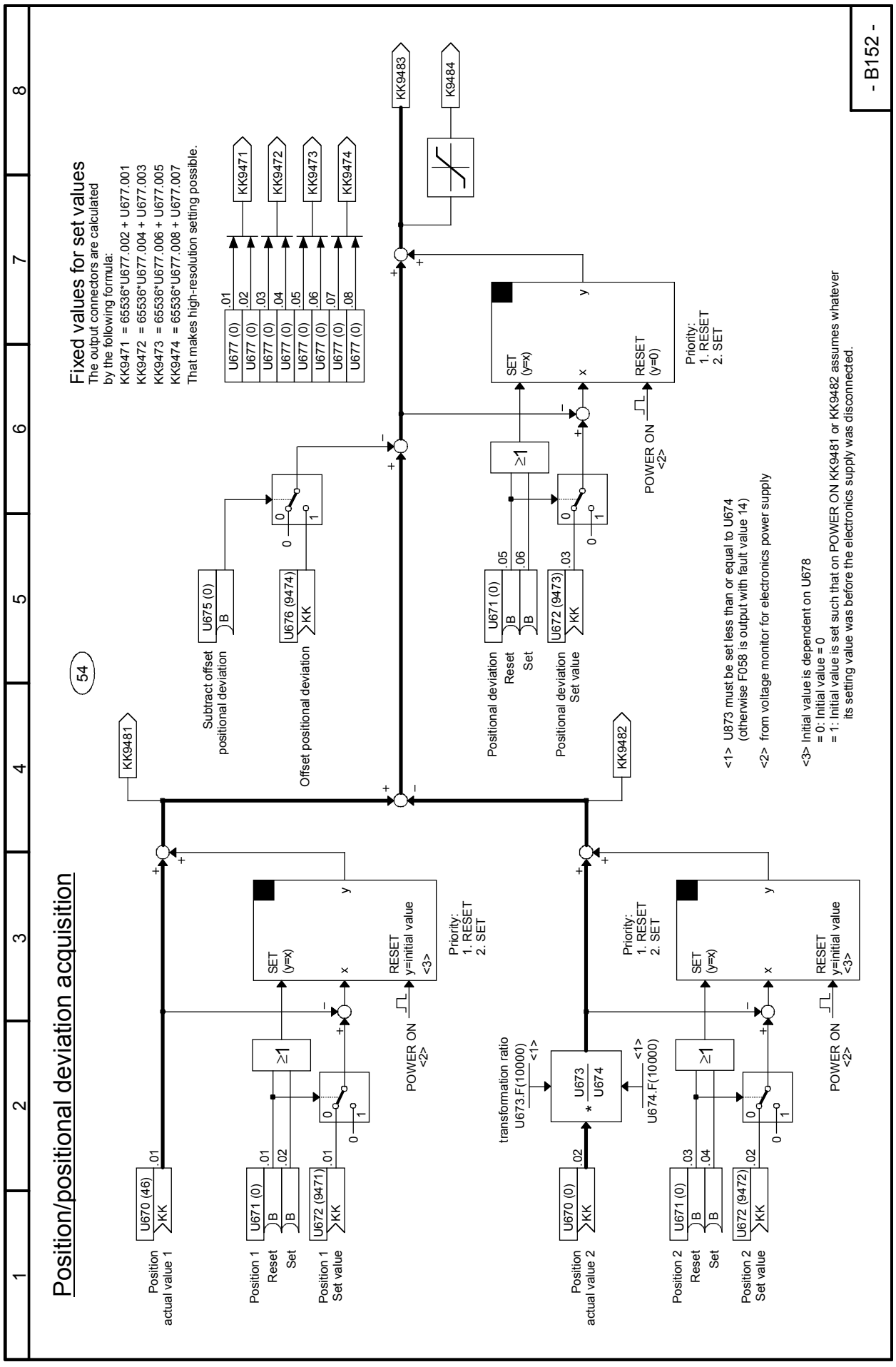

Sheet B153 Root extractor

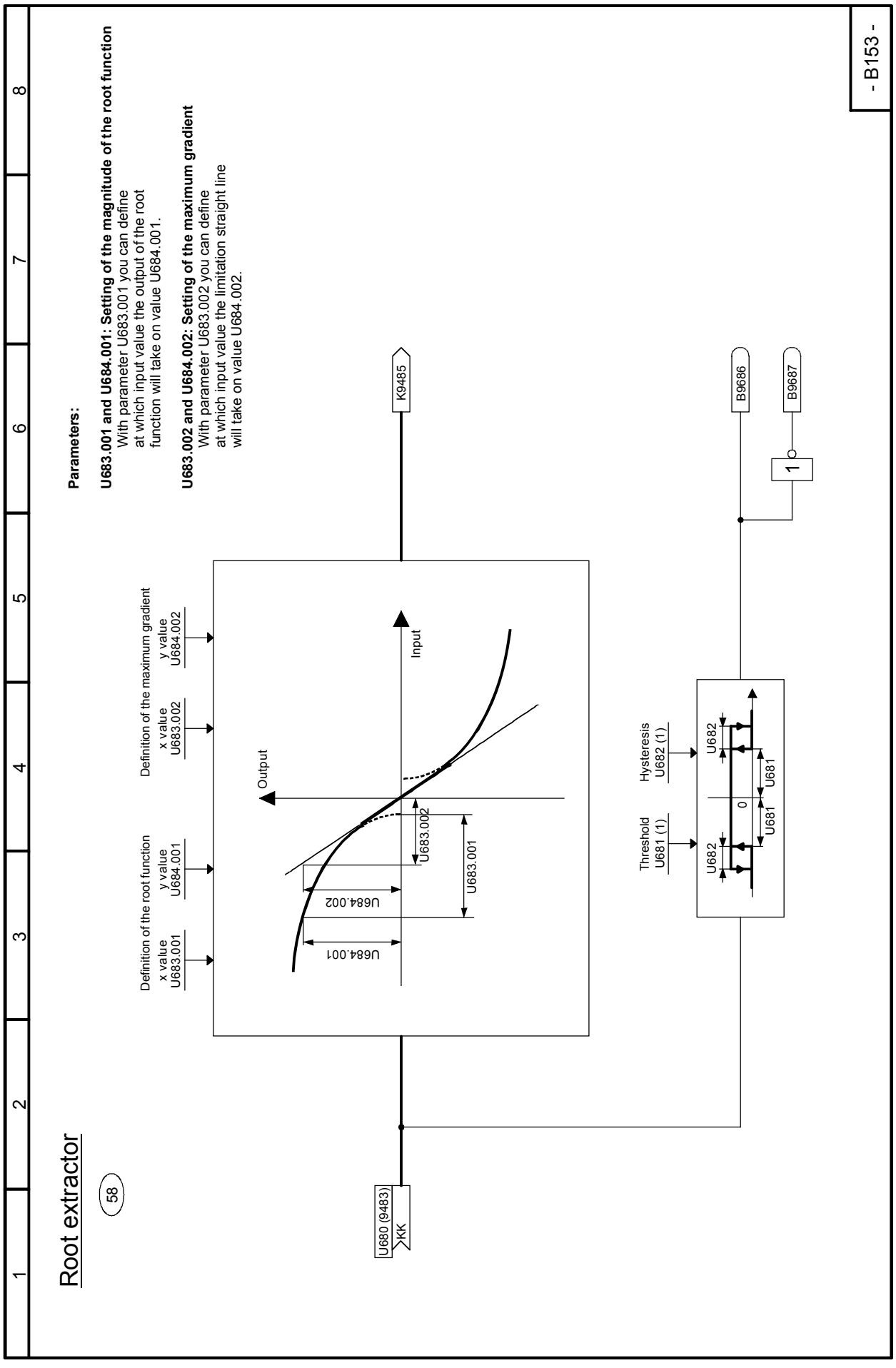

Sheet B155 Integrators, DT1 elements

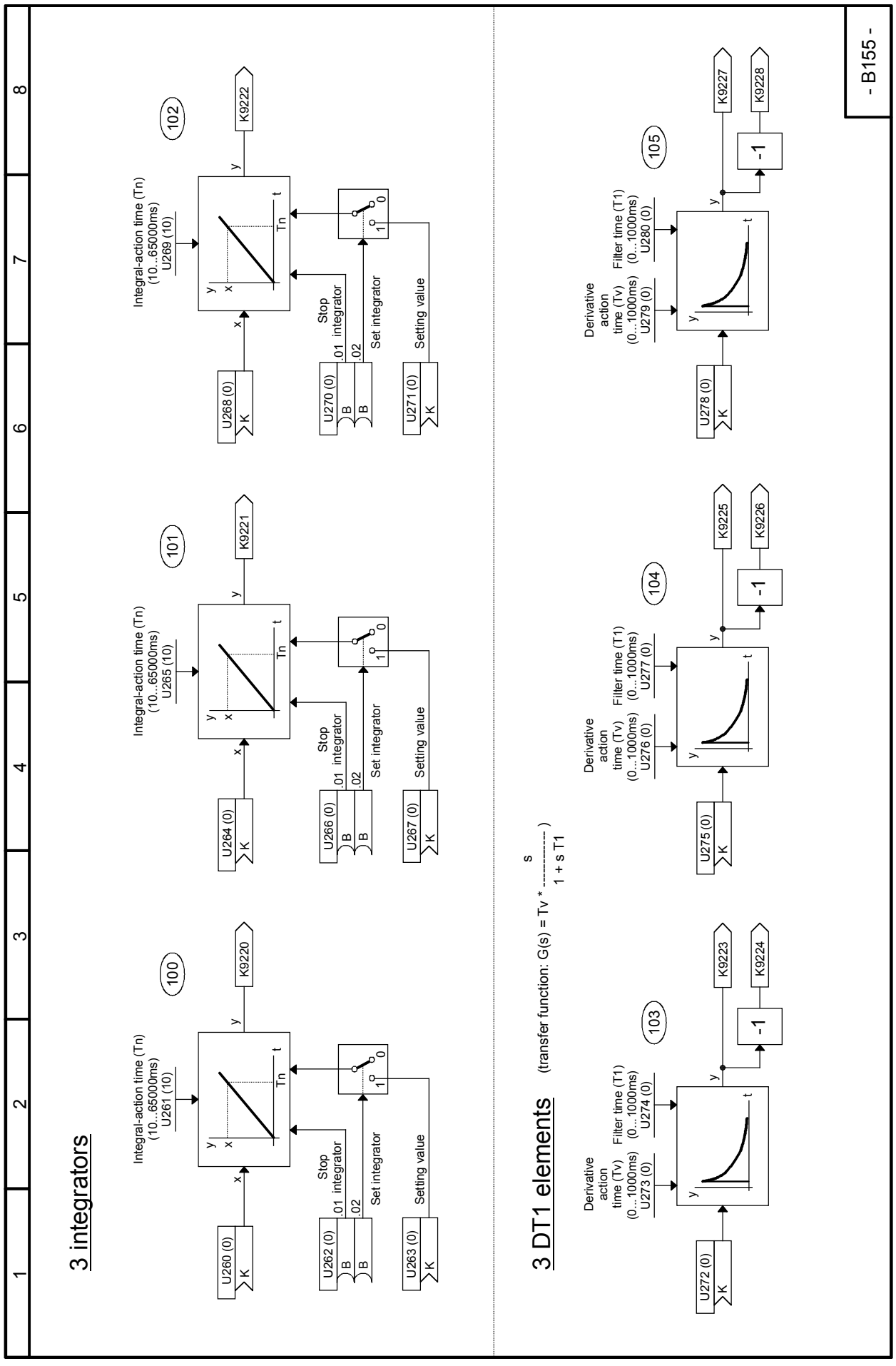

Sheet B156 Derivative / delay elements (LEAD / LAG blocks)

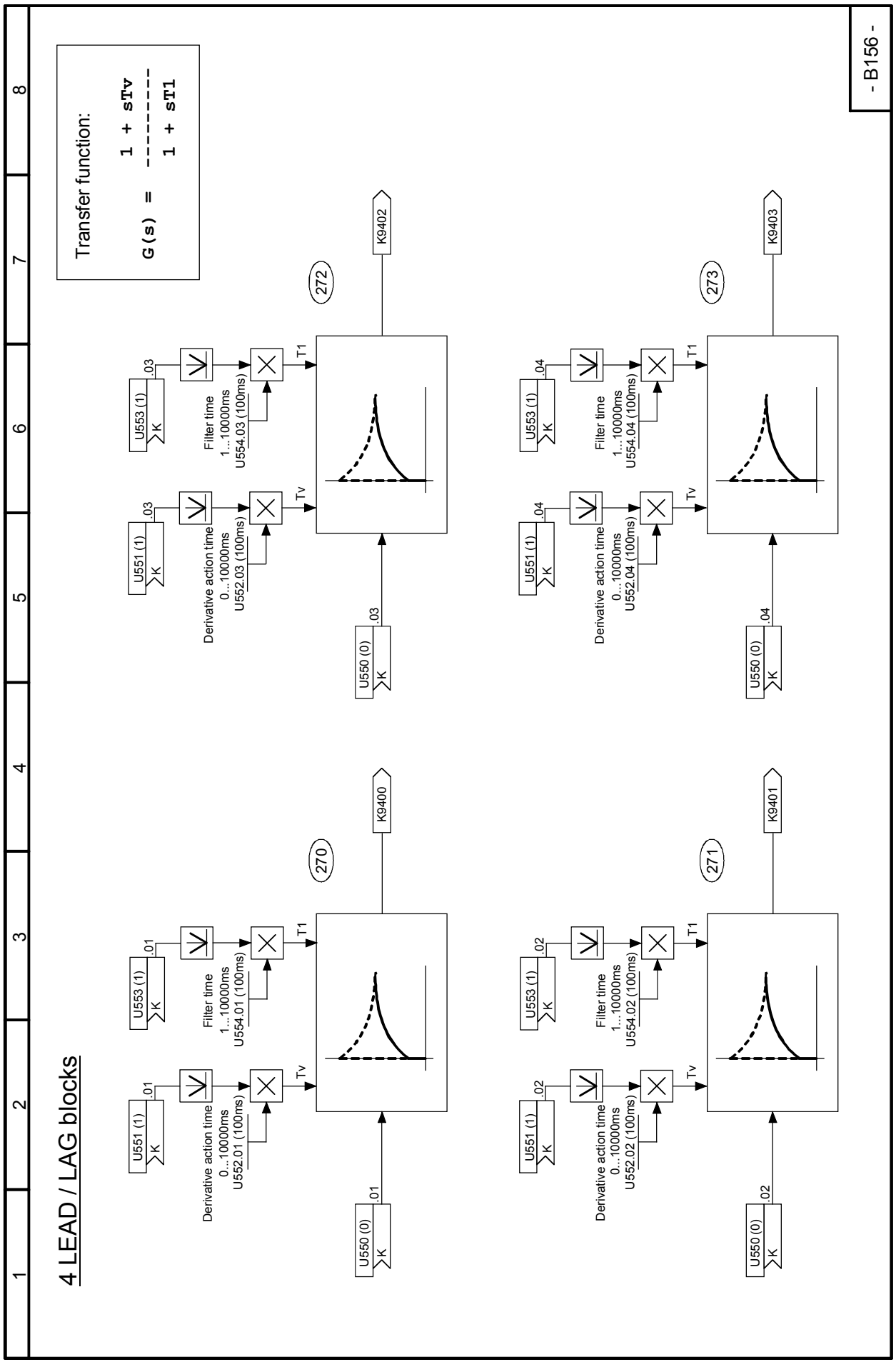

Sheet B157 Derivative / delay elements (LEAD / LAG blocks)

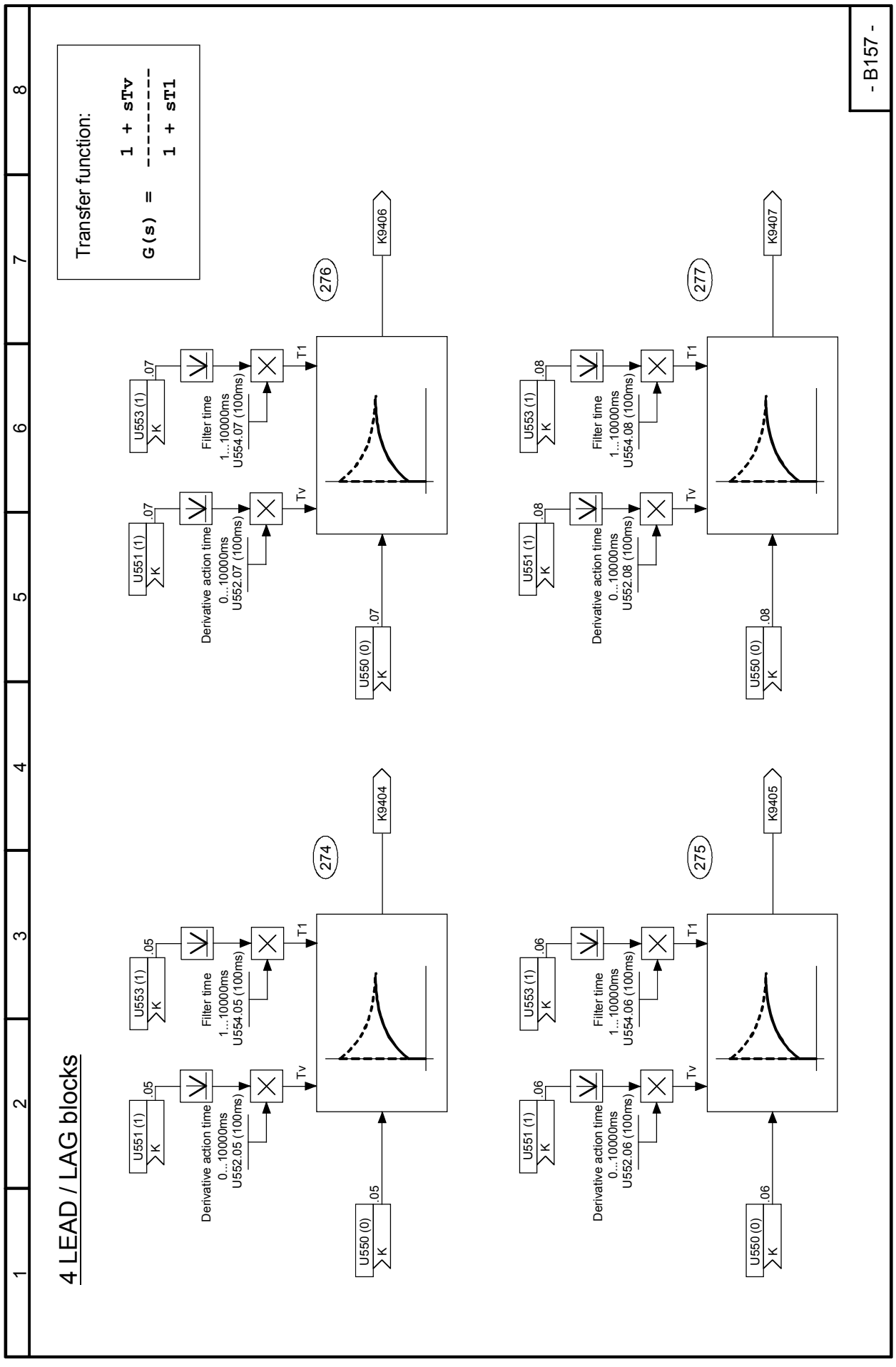

Sheet B158 Derivative / delay elements (LEAD / LAG blocks)

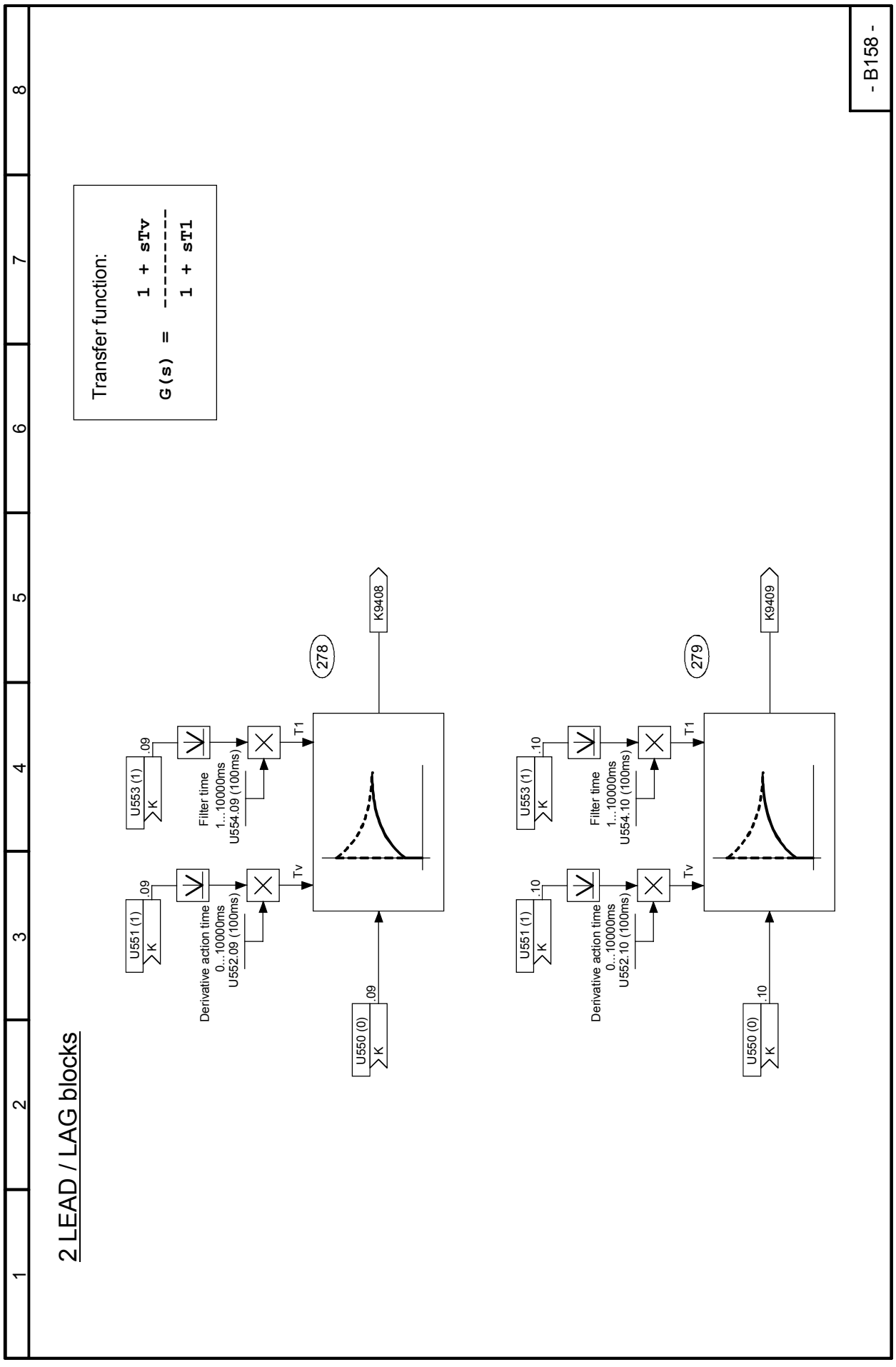

Sheet B160 Characteristic blocks

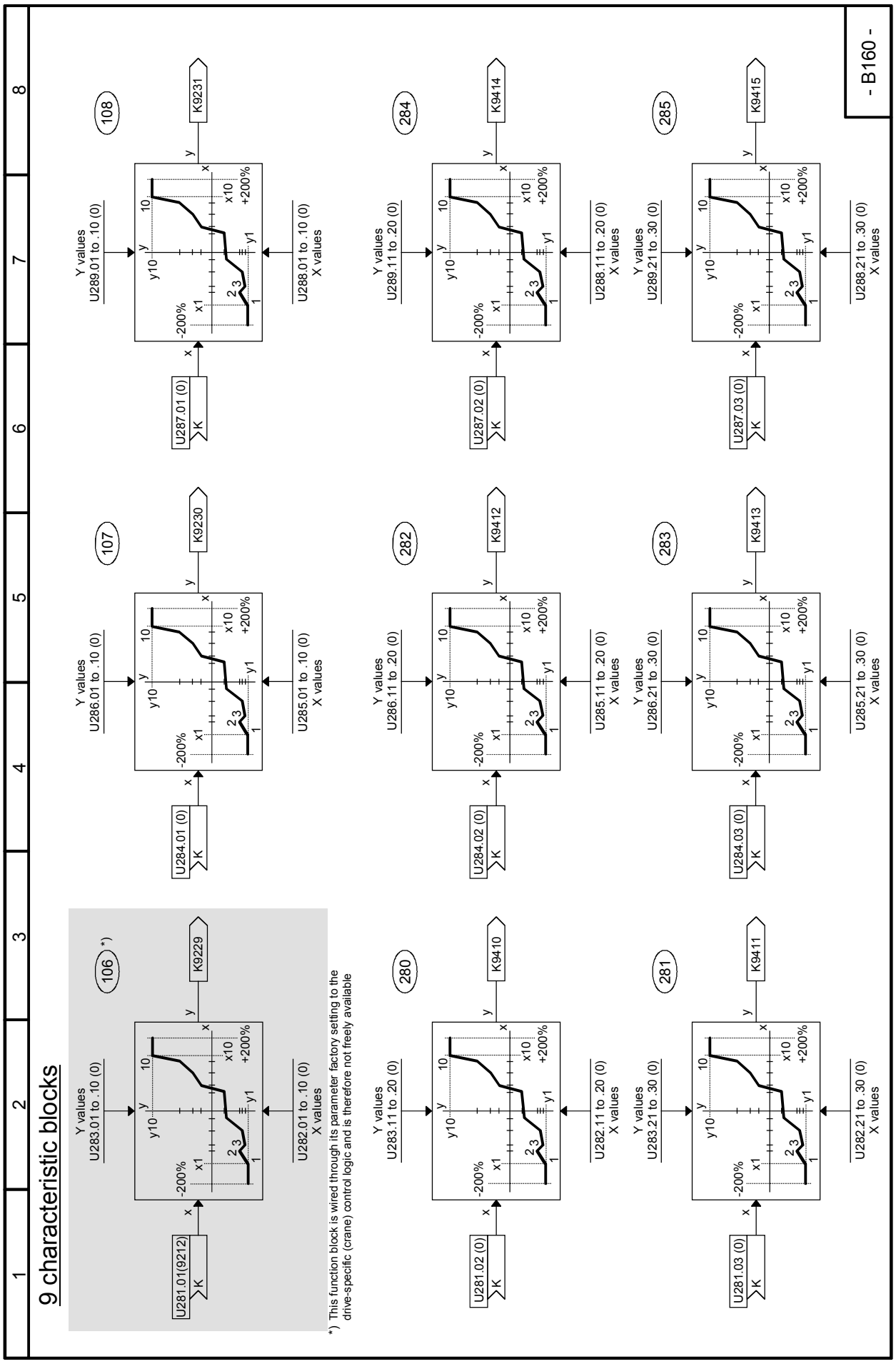

Sheet B161 Dead zones, Setpoint branching

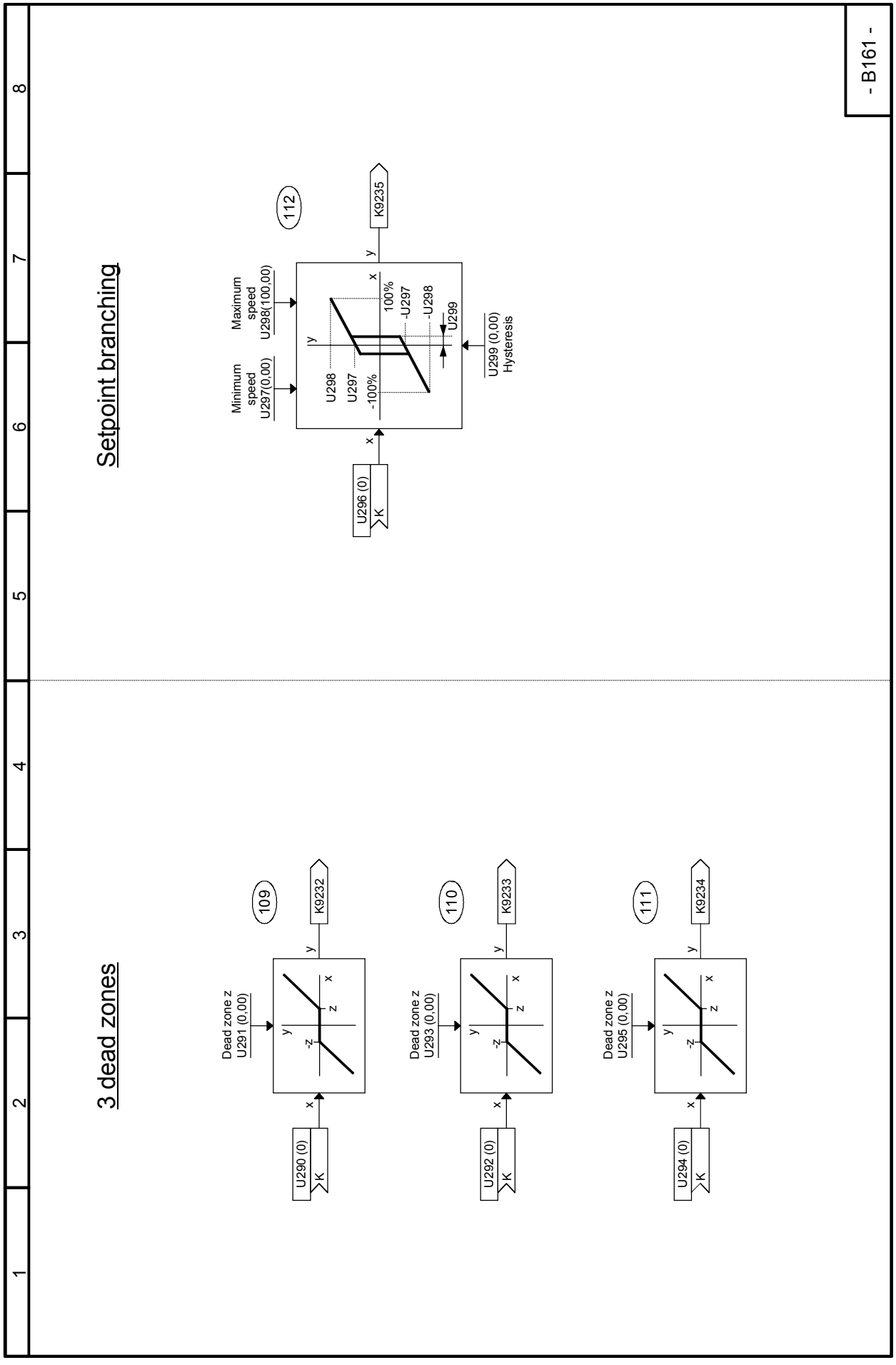

Sheet B165 Simple ramp-function generator

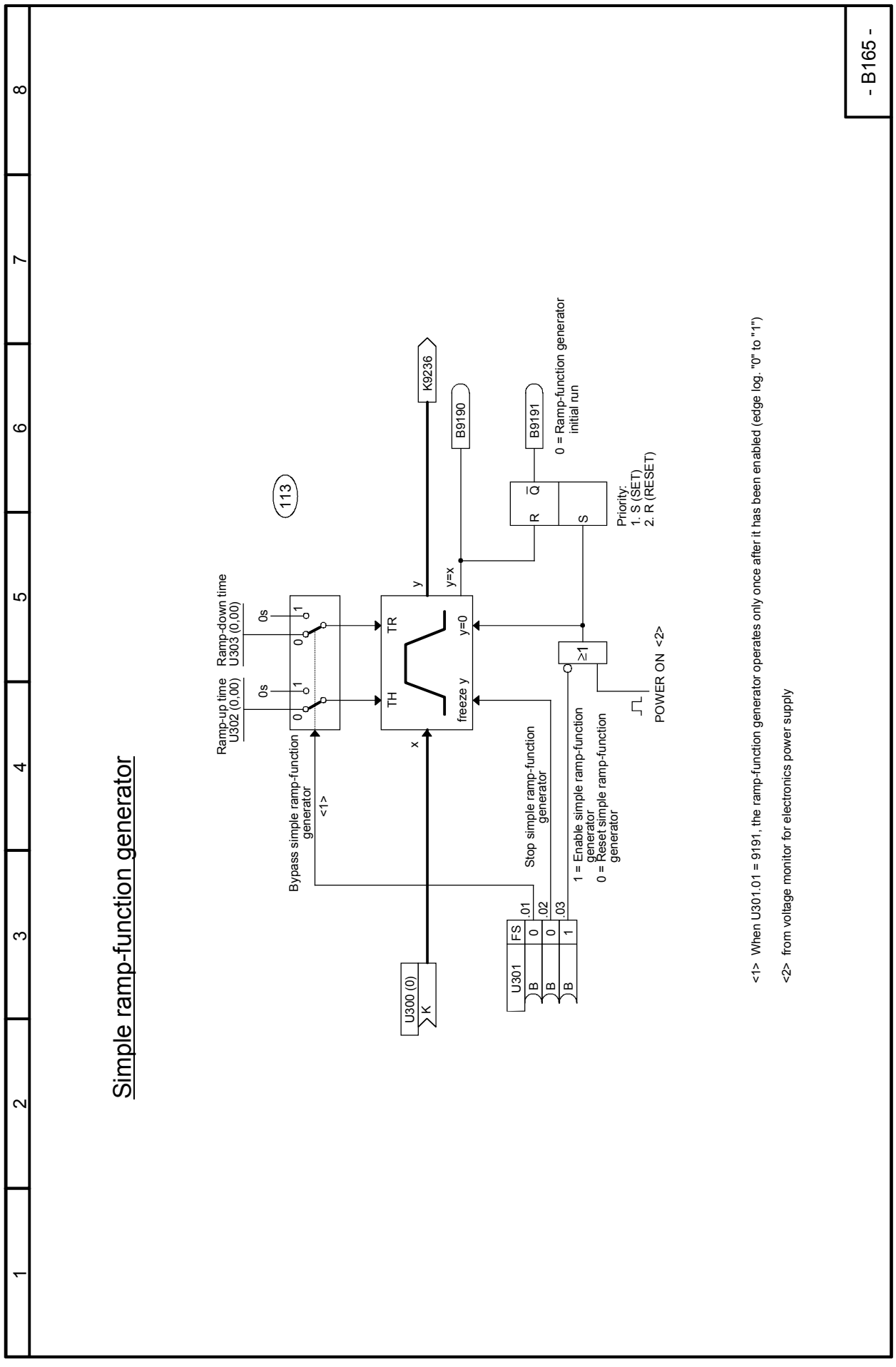

Sheet B170 Technology controller

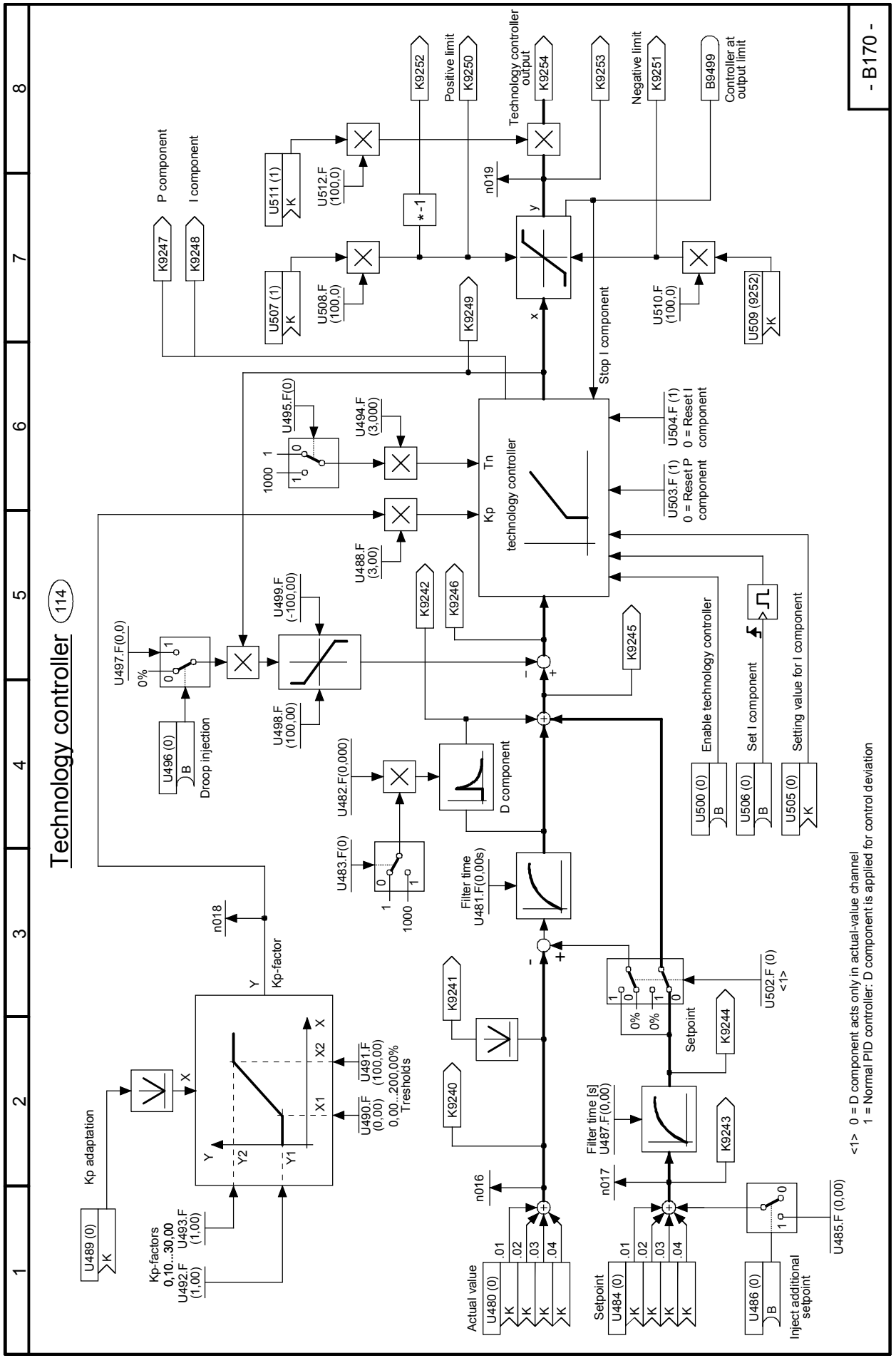

Sheet B180 PI controller 1

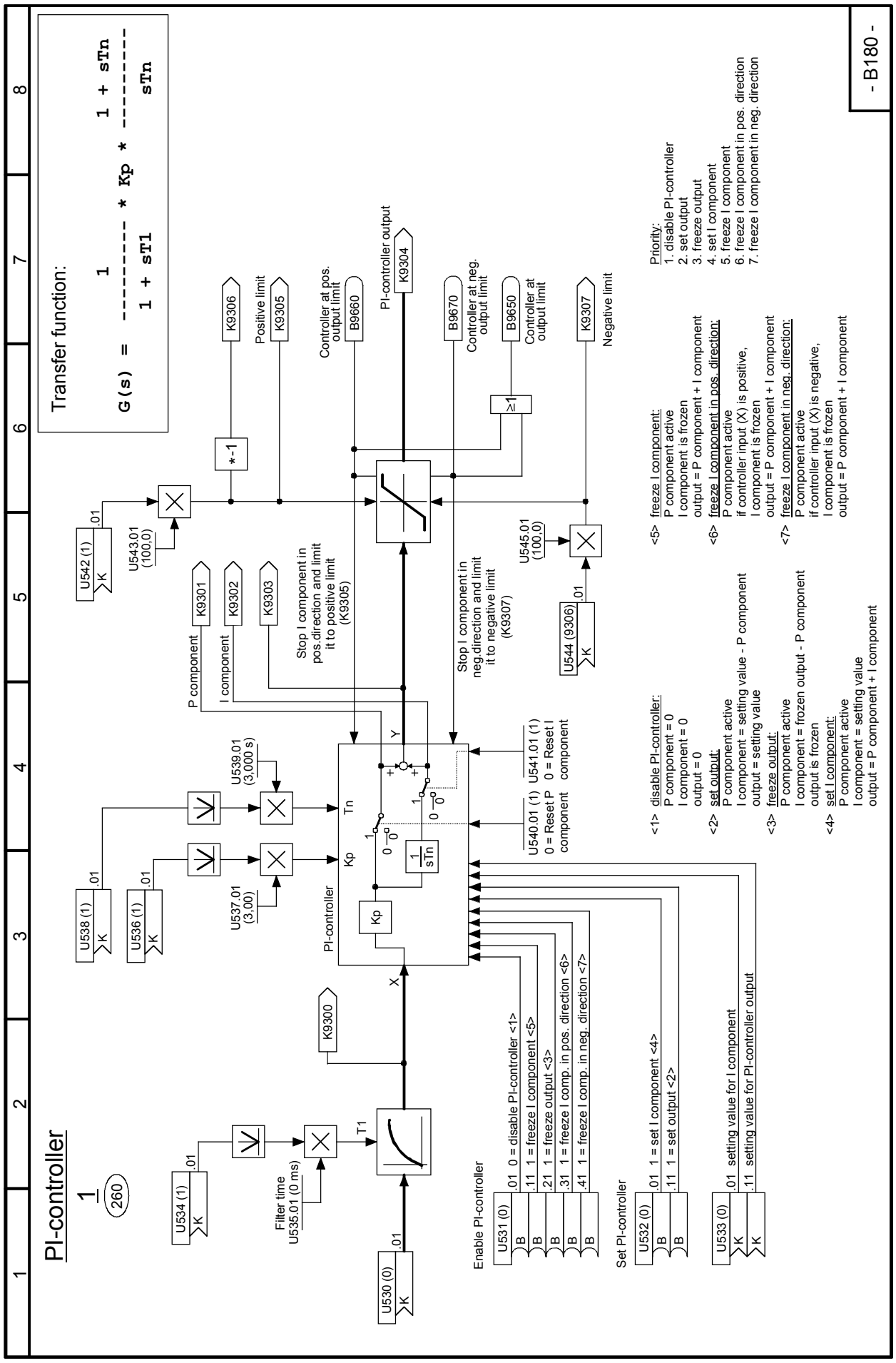

Sheet B181 PI controller 2

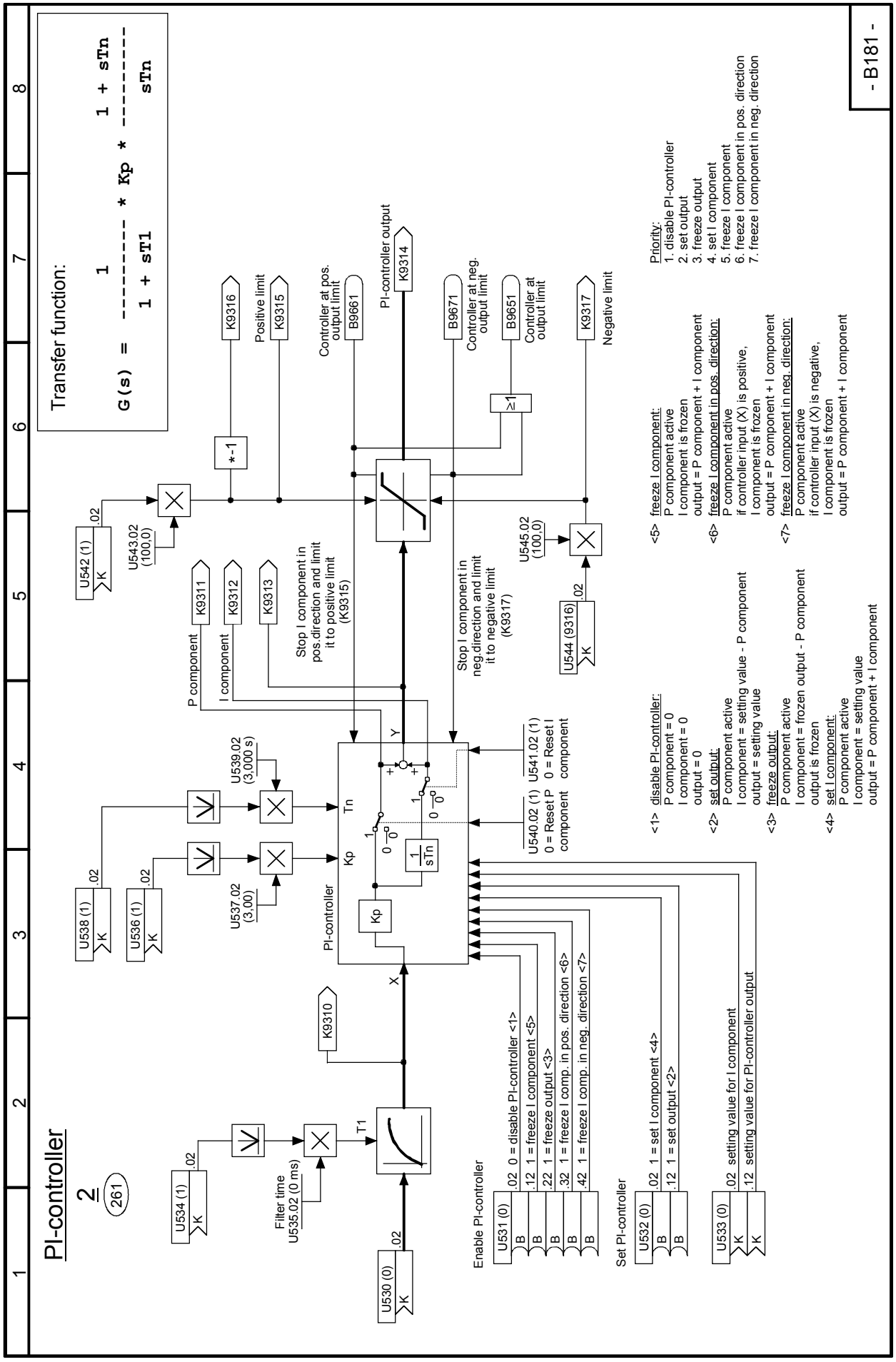

Sheet B182 PI controller 3

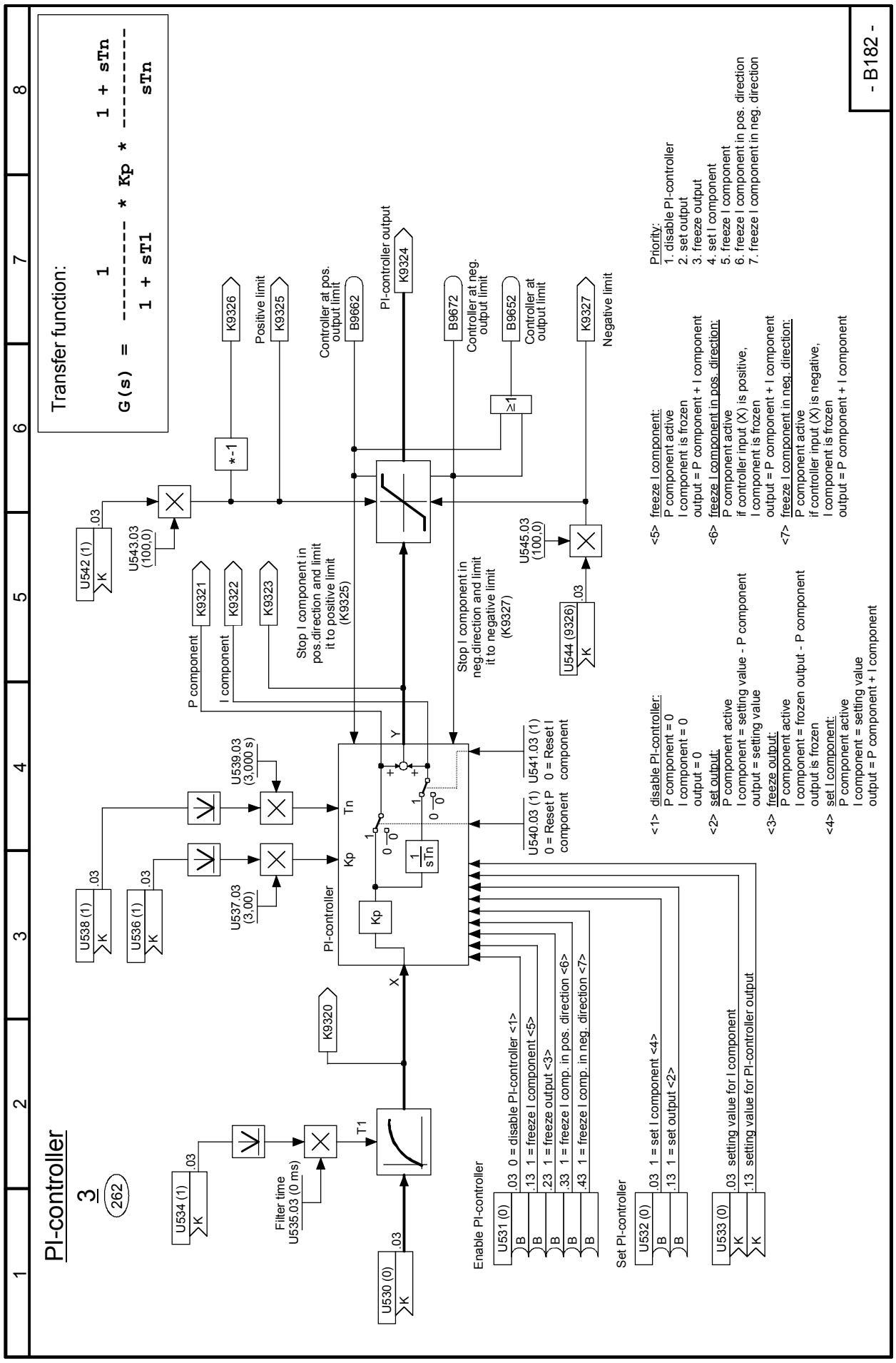

Sheet B183 PI controller 4

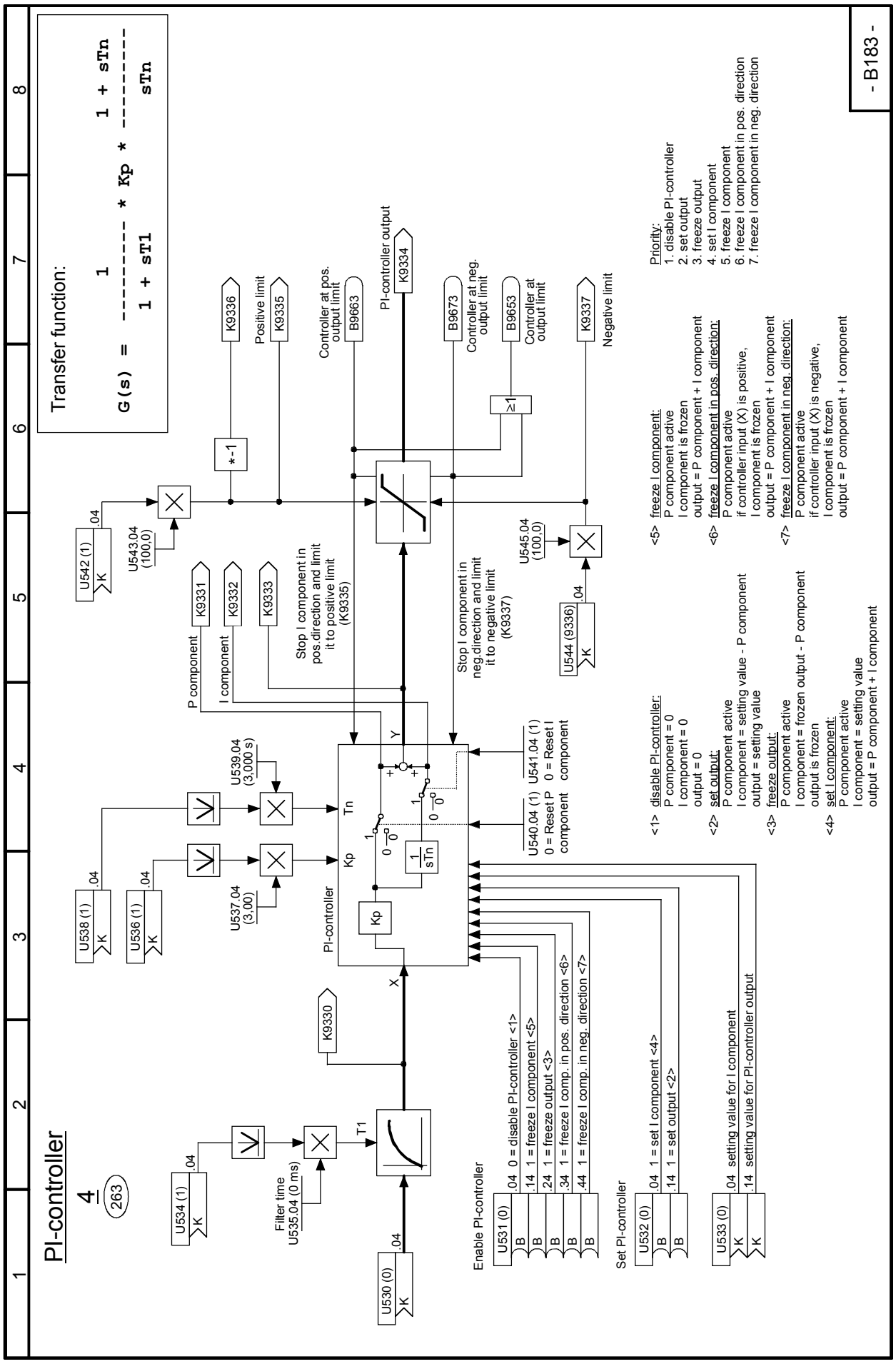

Sheet B184 PI controller 5

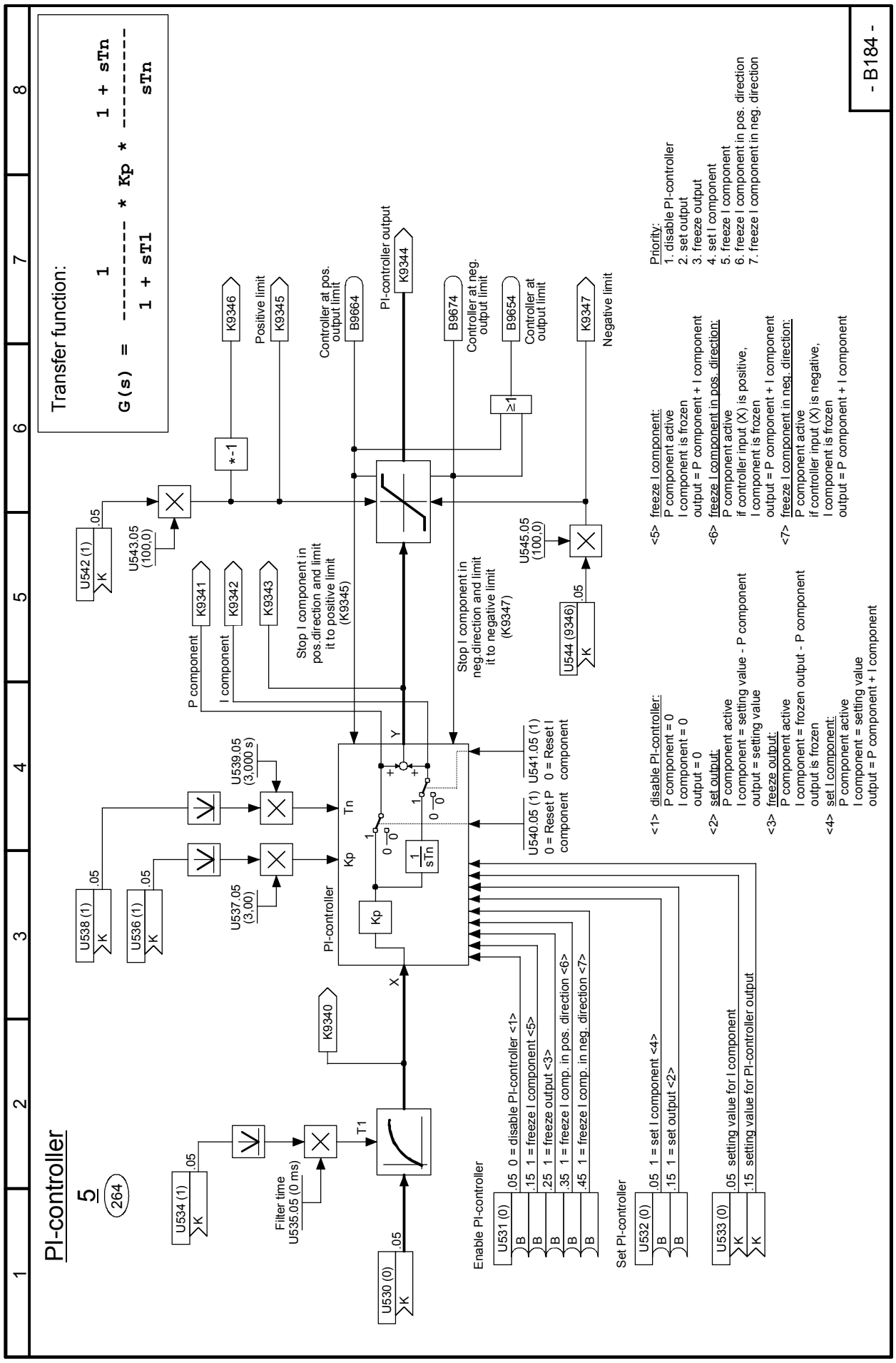

Sheet B185 PI controller 6

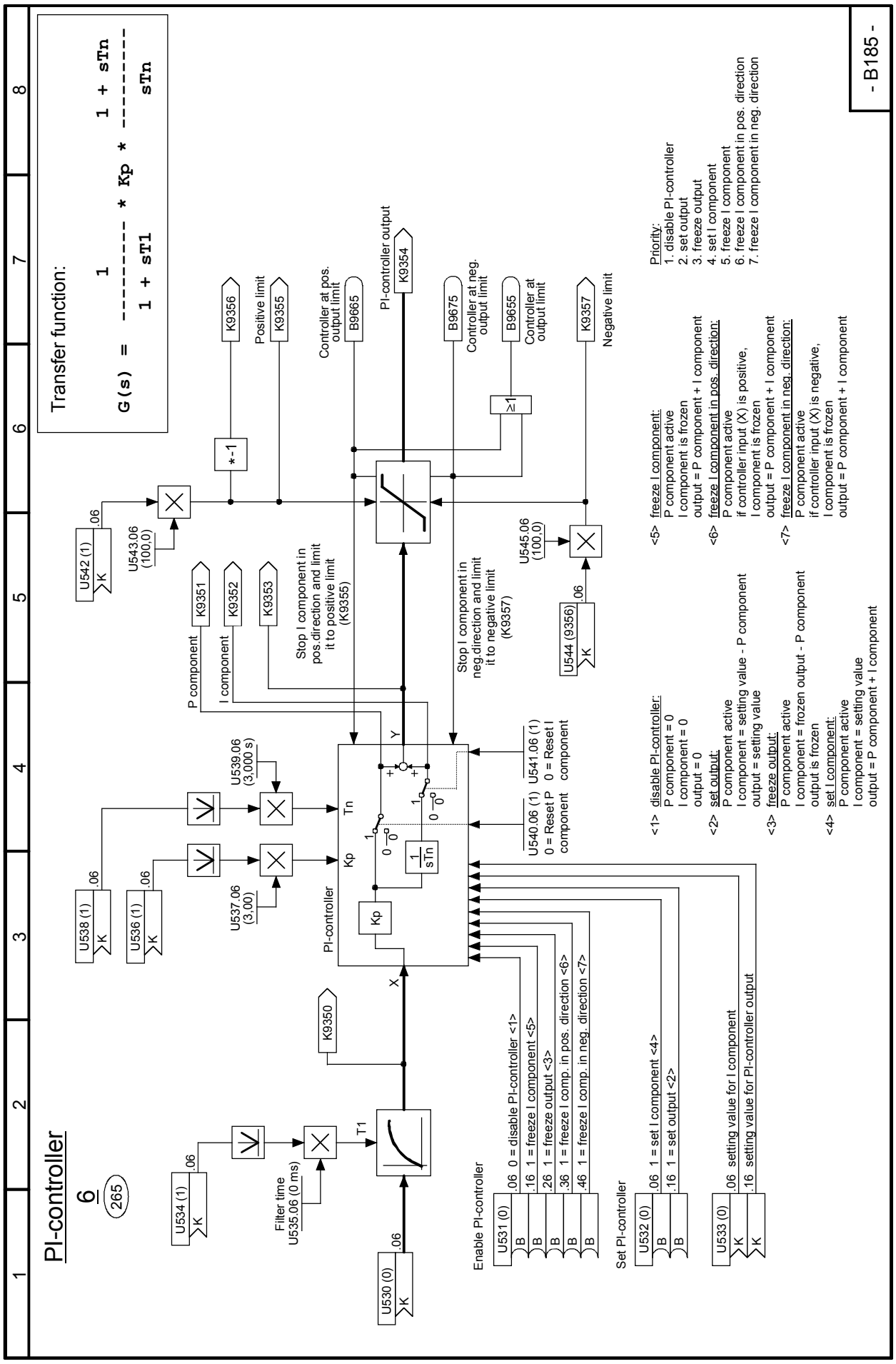

Sheet B186 PI controller 7

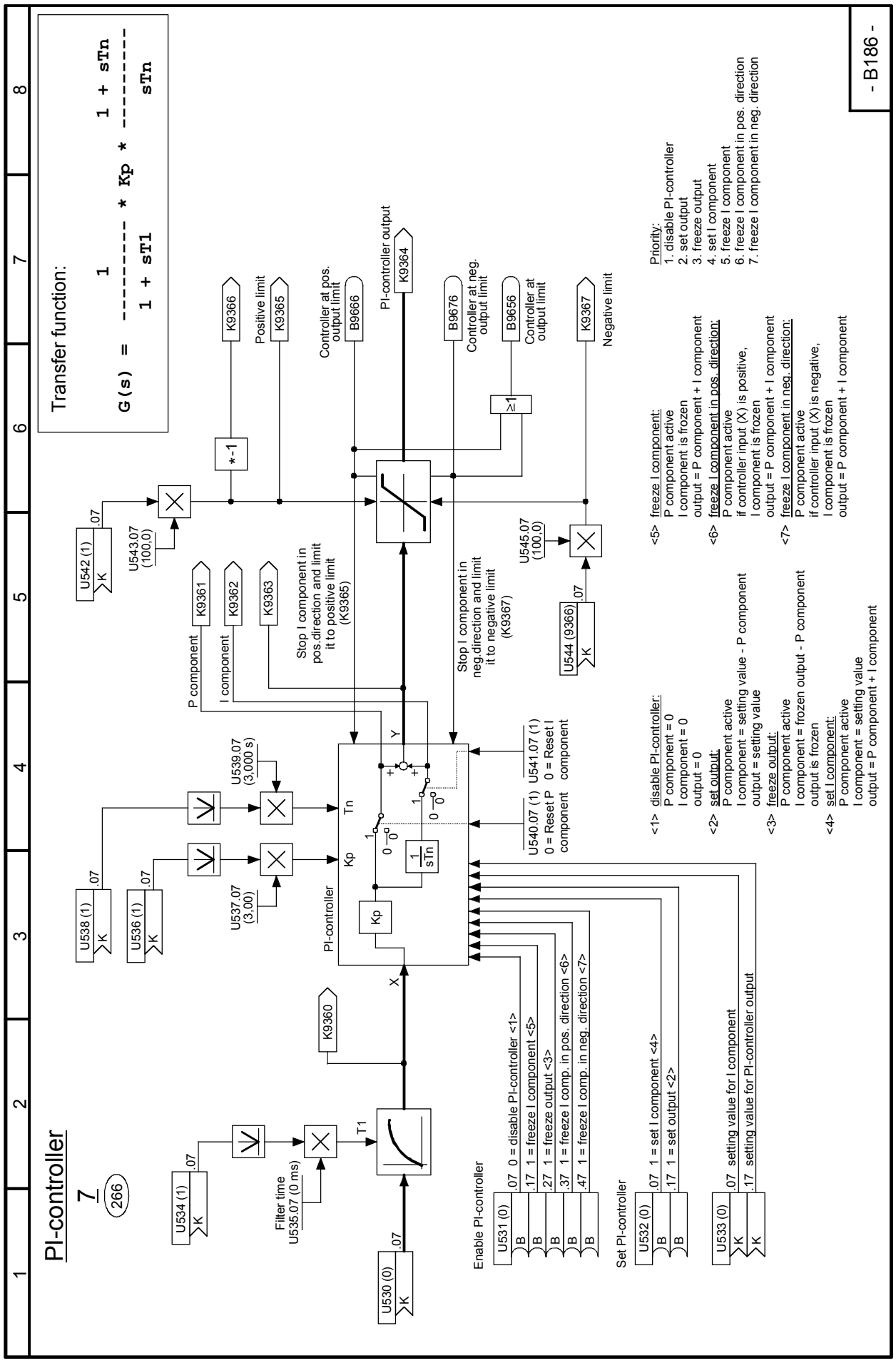

Sheet B187 PI controller 8

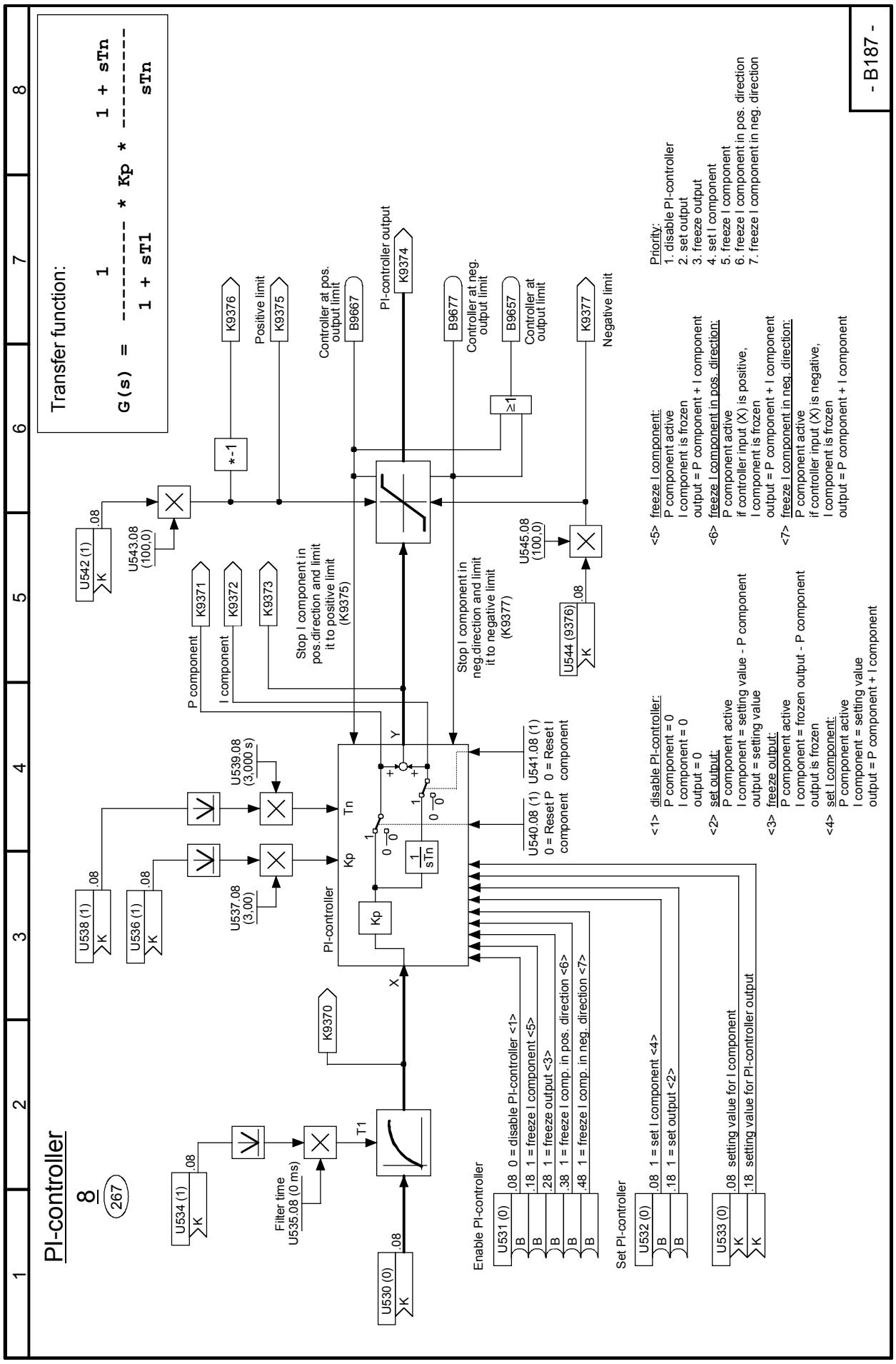

Sheet B188 PI controller 9

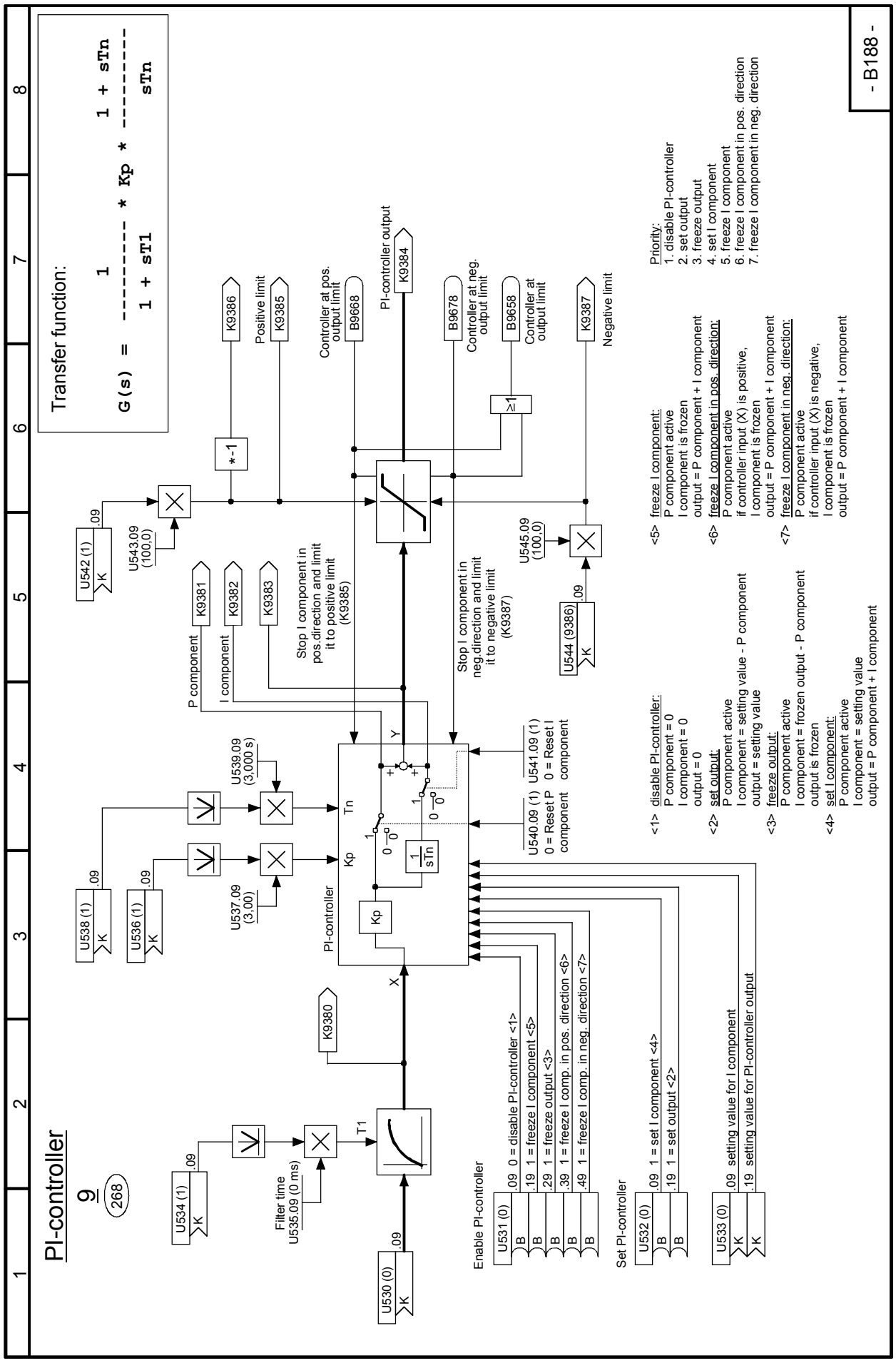

Sheet B189 PI controller 10

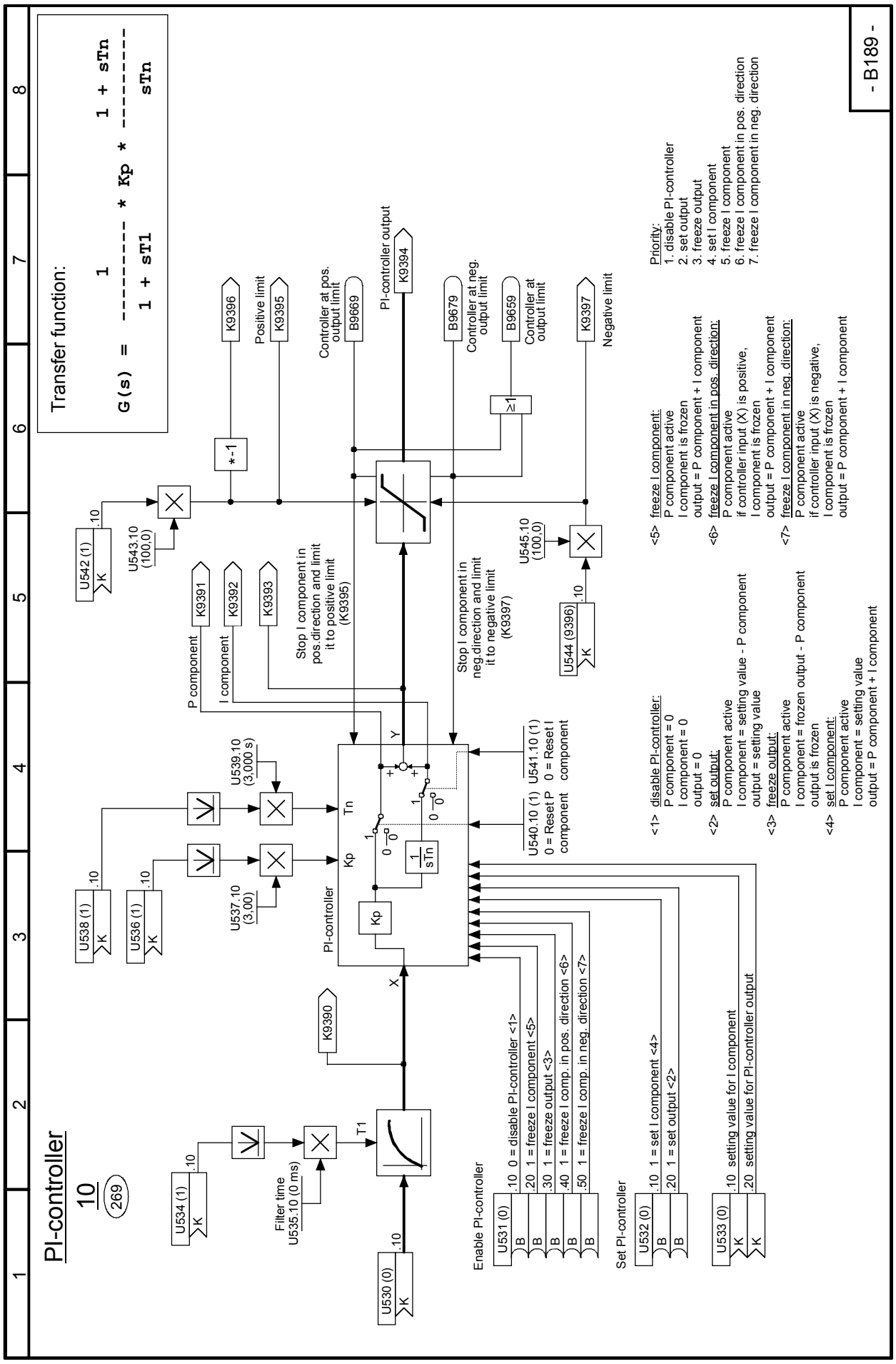

Sheet B190 Velocity / speed calculator

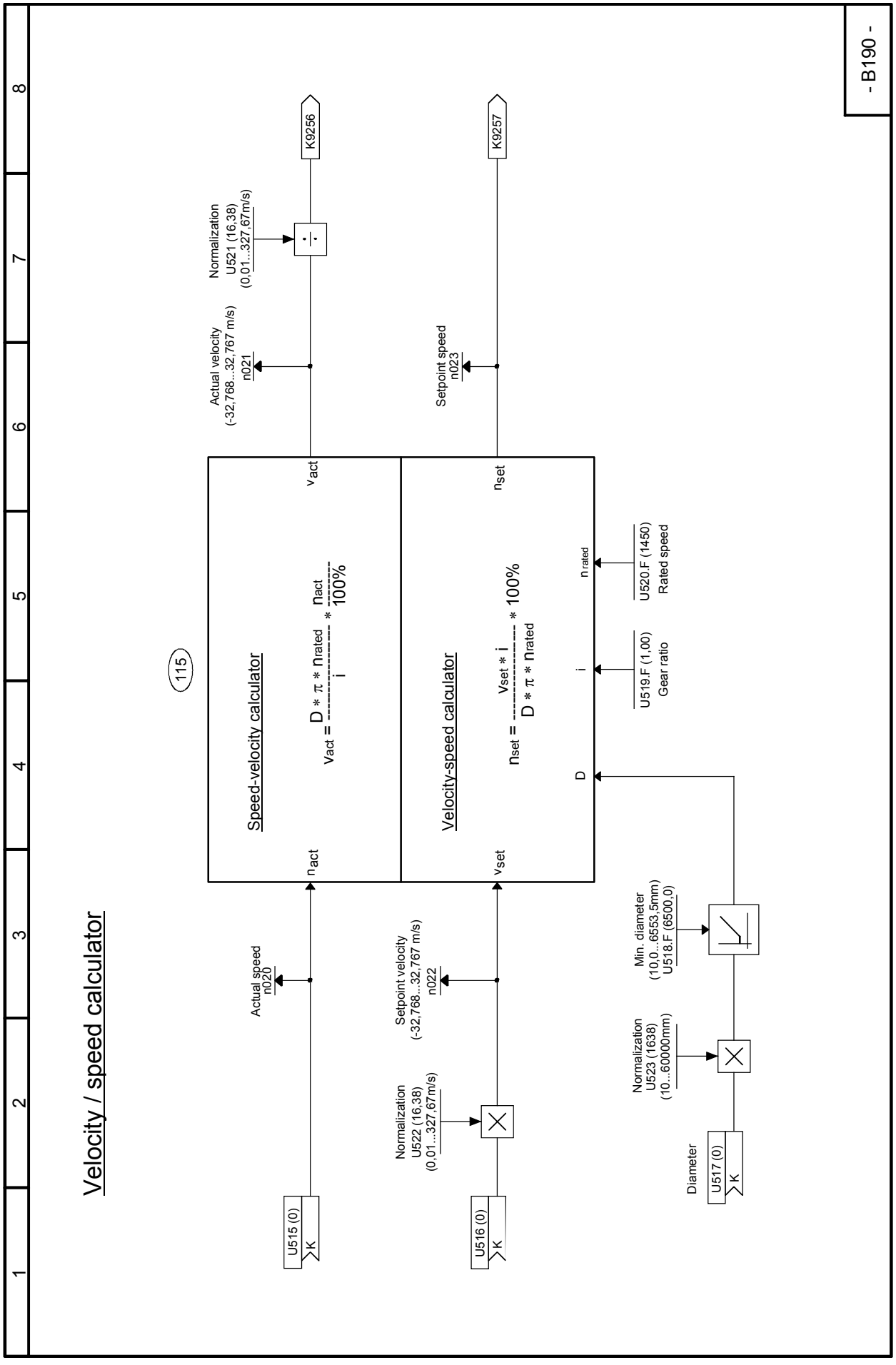

Sheet B191 Calculation variable inertia

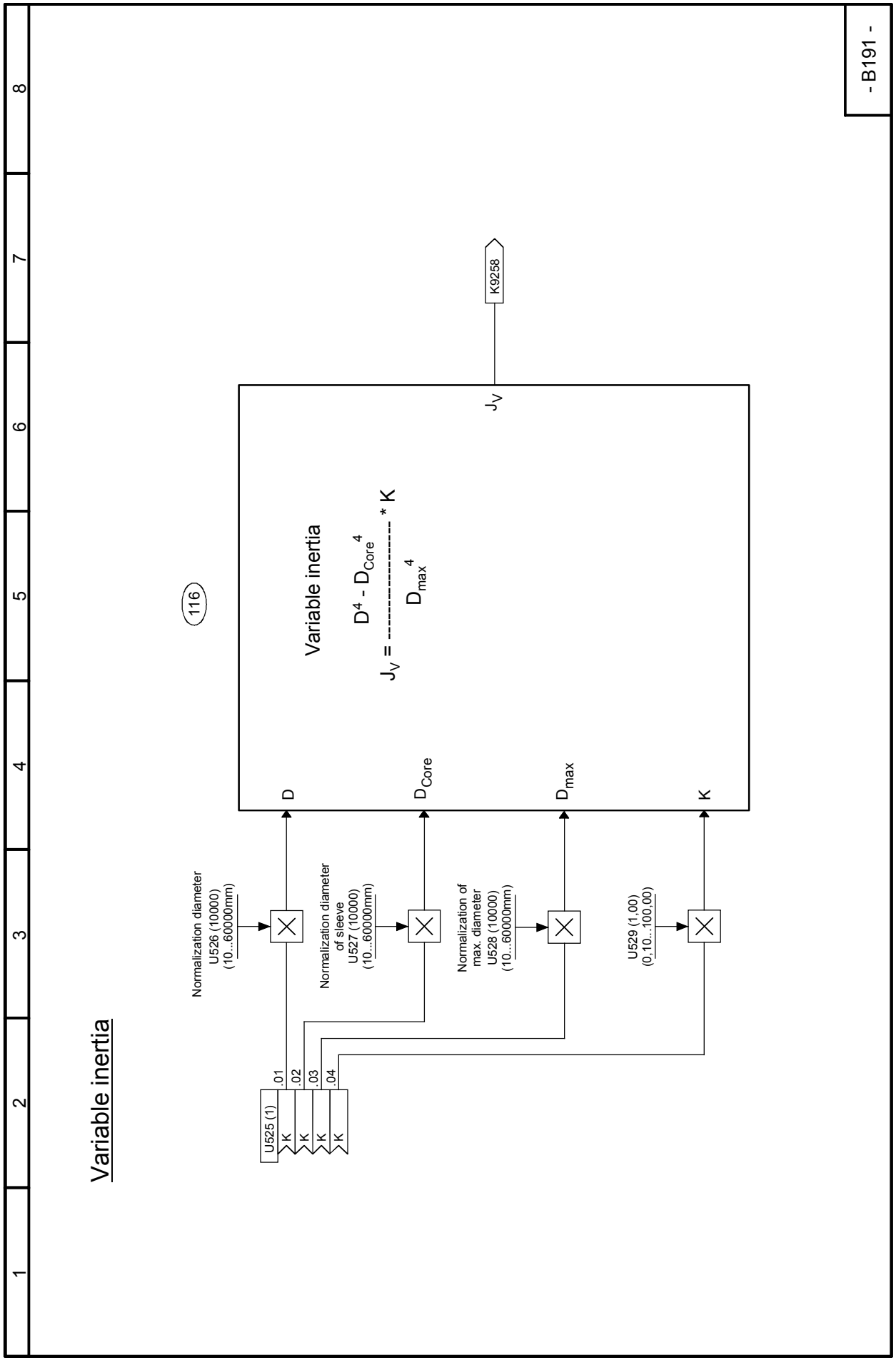

Sheet B195 Multiplexer

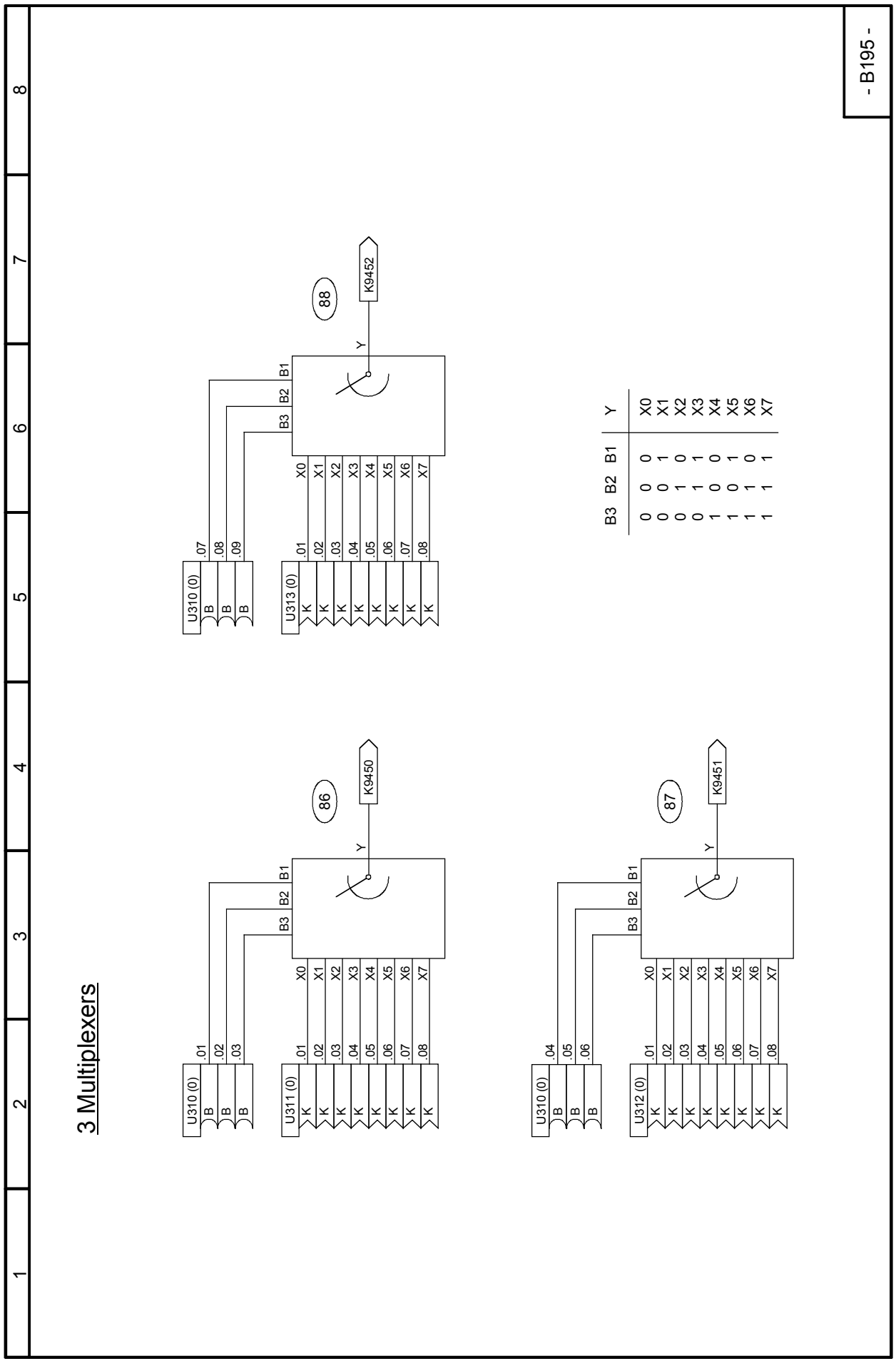

Sheet B196 16-bit software counter

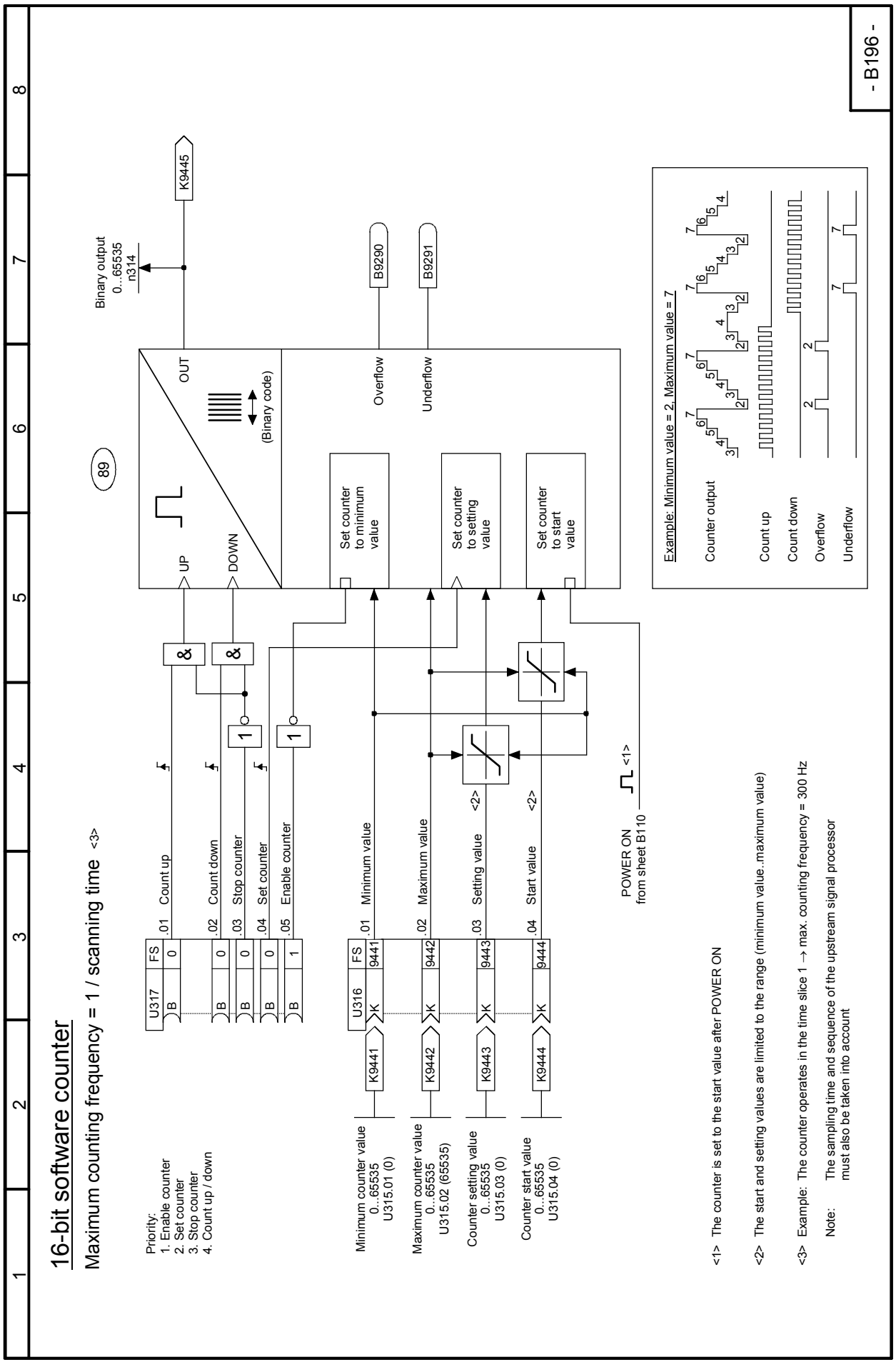

Sheet B200 Decoders / demultiplexers, binary to 1 of 8

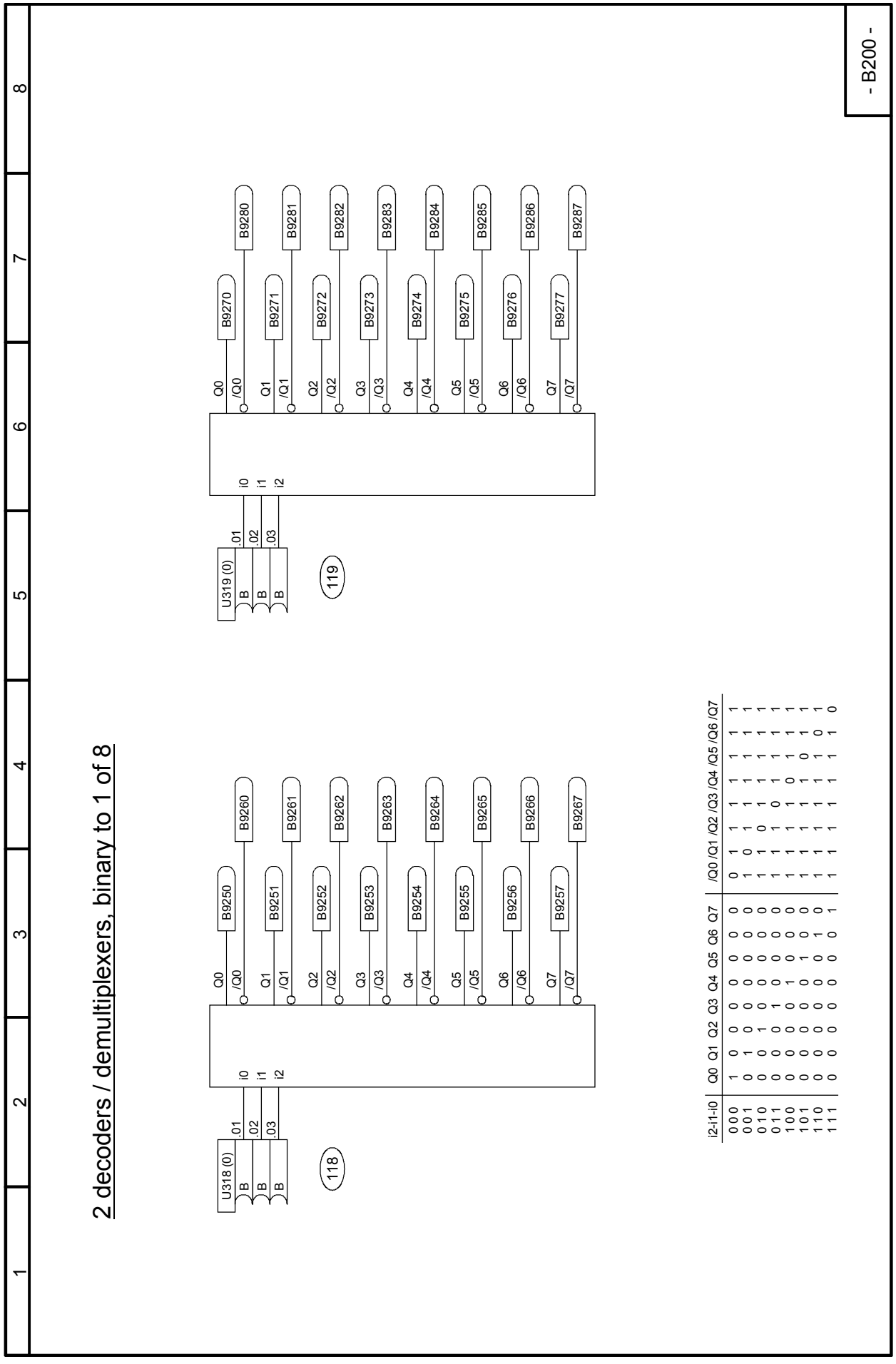

i2-i1-i0	Q0	Q1	Q2	Q3	Q4	Q5	Q6	Q7	/Q0	/Q1	/Q2	/Q3	/Q4	/Q5	/Q6	/Q7
0 0 0	1	0	0	0	0	0	0	0	0	1	1	1	1	1	1	1
0 0 1	0	1	0	0	0	0	0	0	1	0	1	1	1	1	1	1
0 1 0	0	0	1	0	0	0	0	0	1	1	0	1	1	1	1	1
0 1 1	0	0	0	1	0	0	0	0	1	1	1	0	1	1	1	1
1 0 0	0	0	0	0	1	0	0	0	1	1	1	1	0	1	1	1
1 0 1	0	0	0	0	0	1	0	0	1	1	1	1	1	0	1	1
1 1 0	0	0	0	0	0	0	1	0	1	1	1	1	1	1	0	1
1 1 1	0	0	0	0	0	0	0	1	1	1	1	1	1	1	1	0

Sheet B205 AND elements

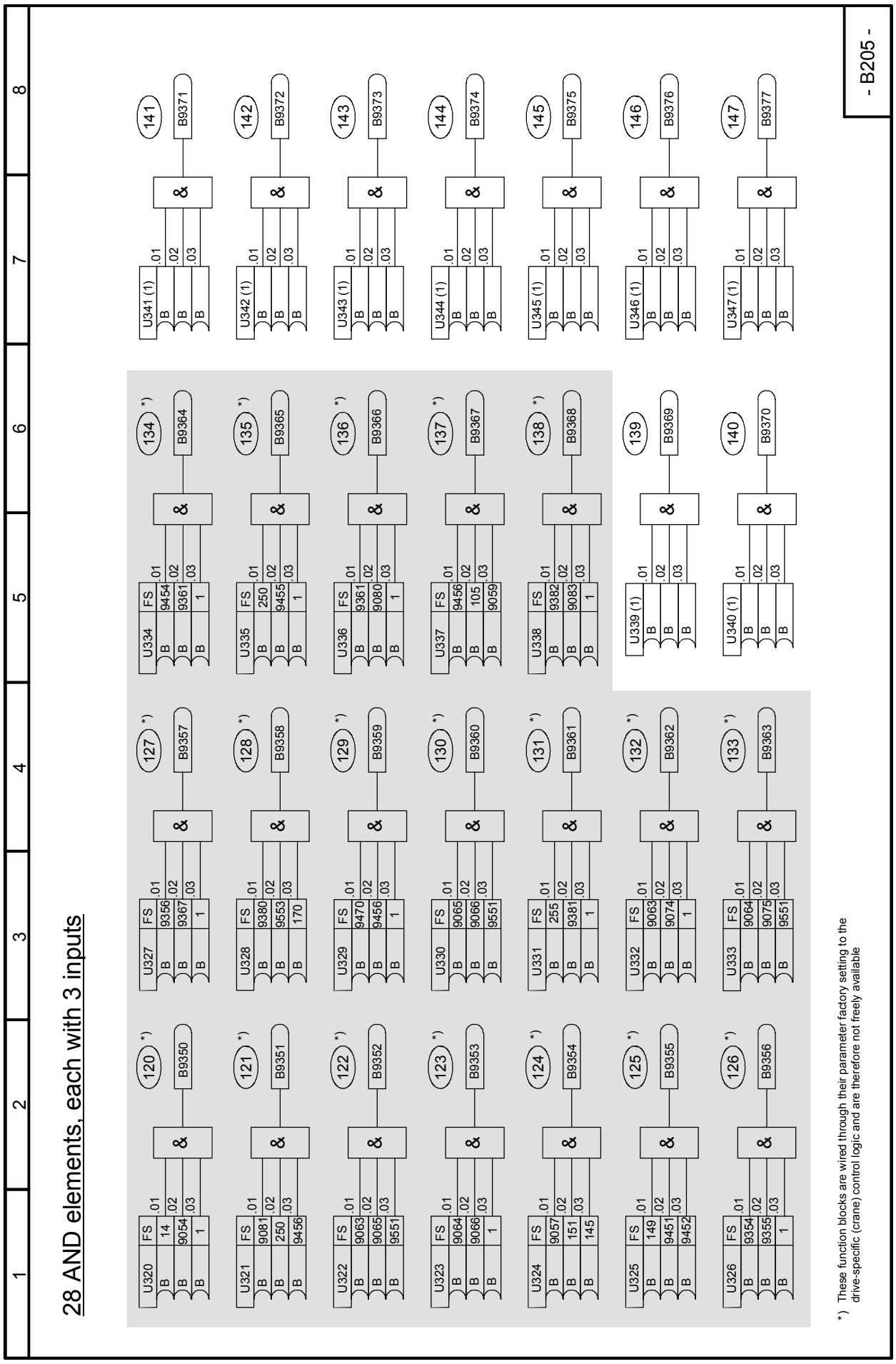

Sheet B206 OR elements, EXCLUSIVE OR elements

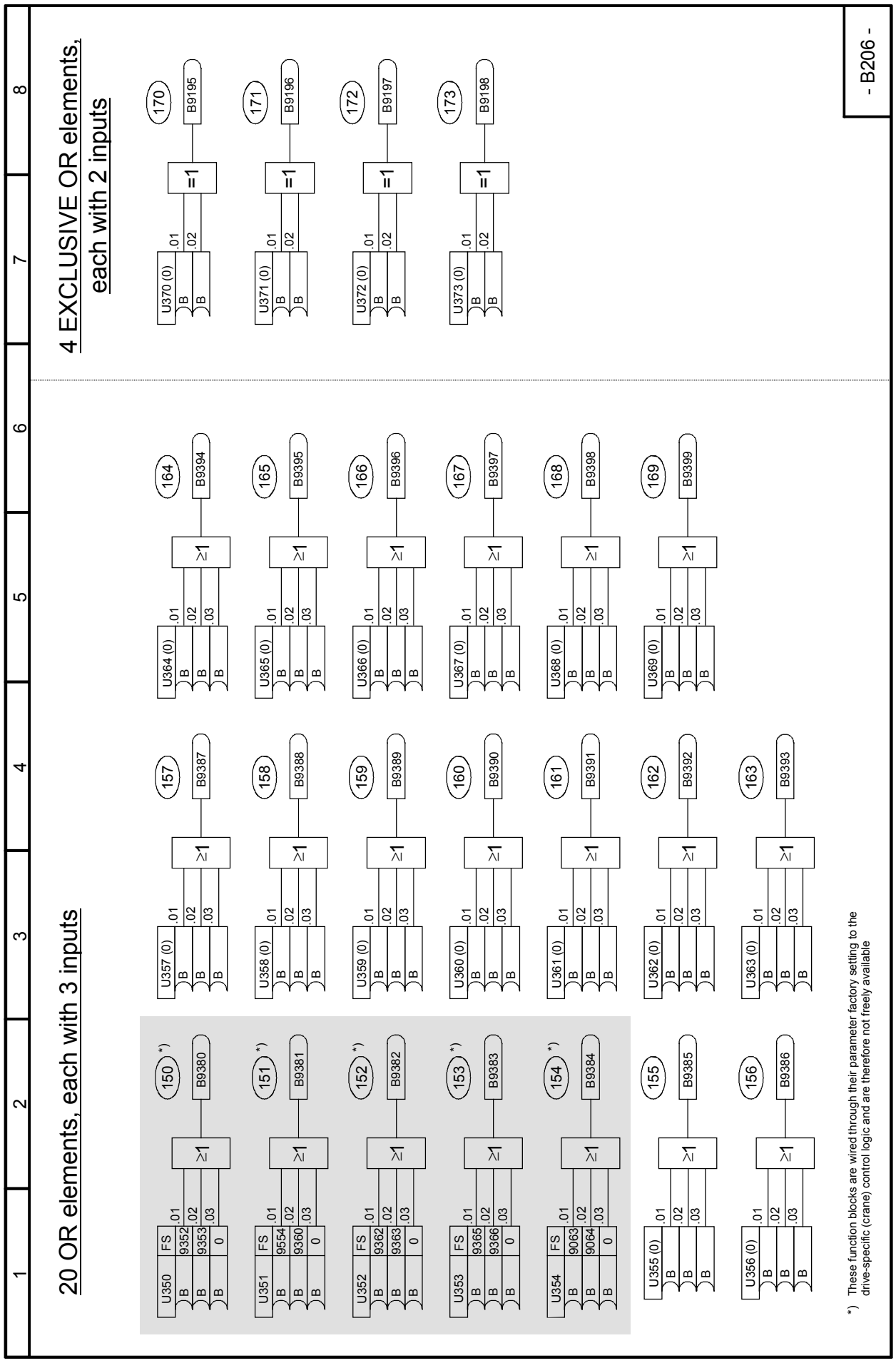

Sheet B207 Inverters, NAND elements

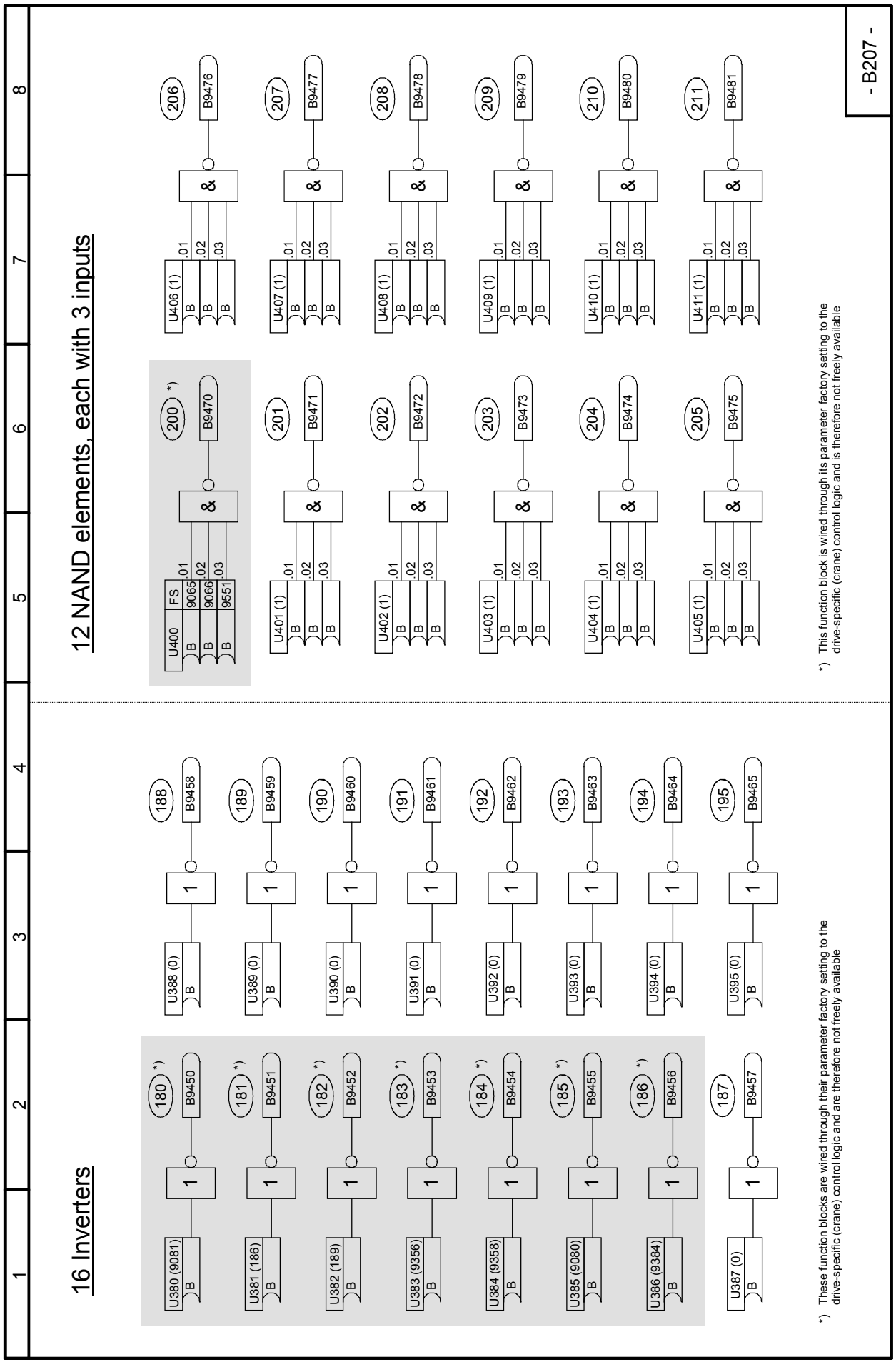

Sheet B210 RS flipflops

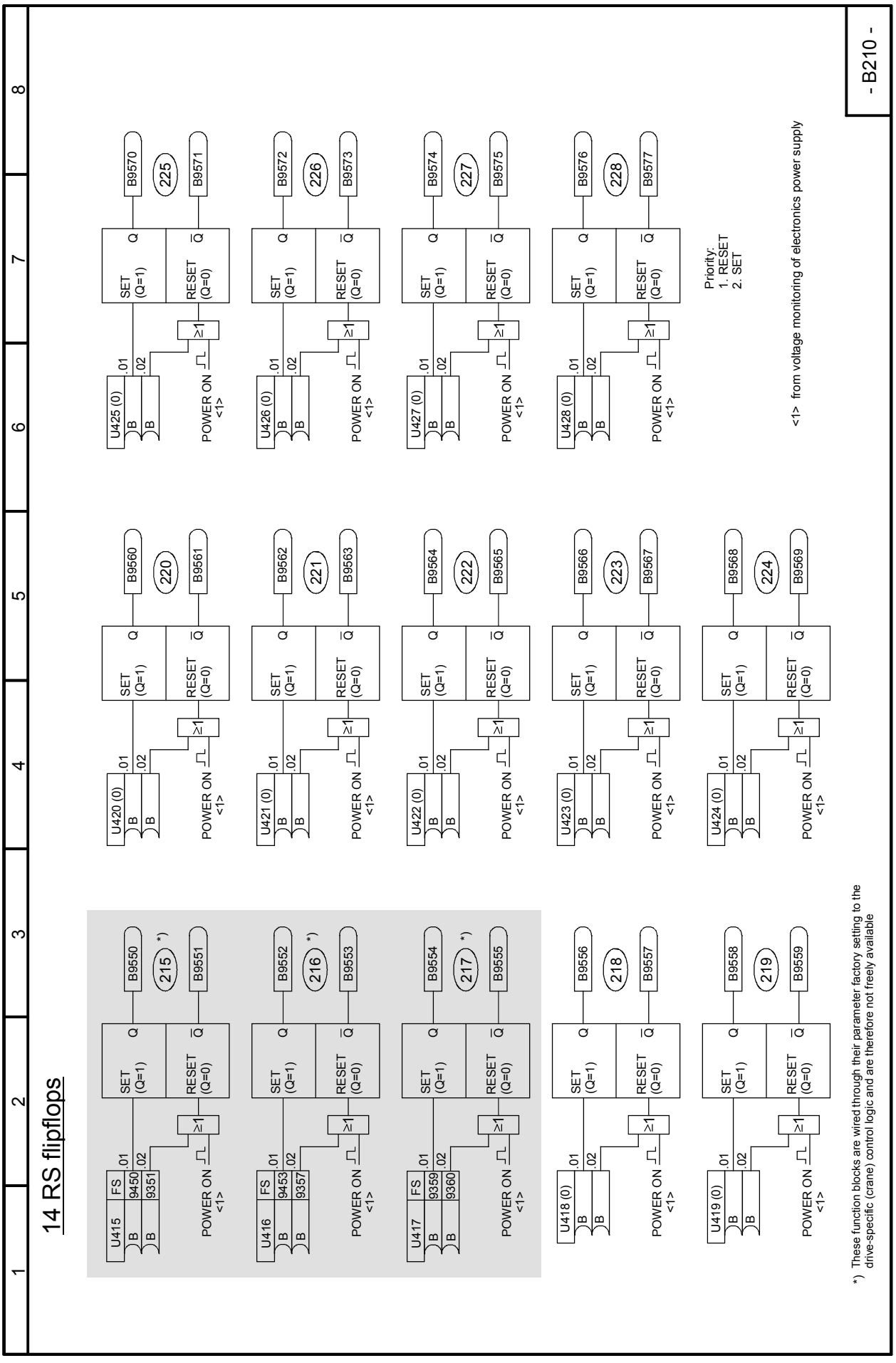

Sheet B211 D flipflops

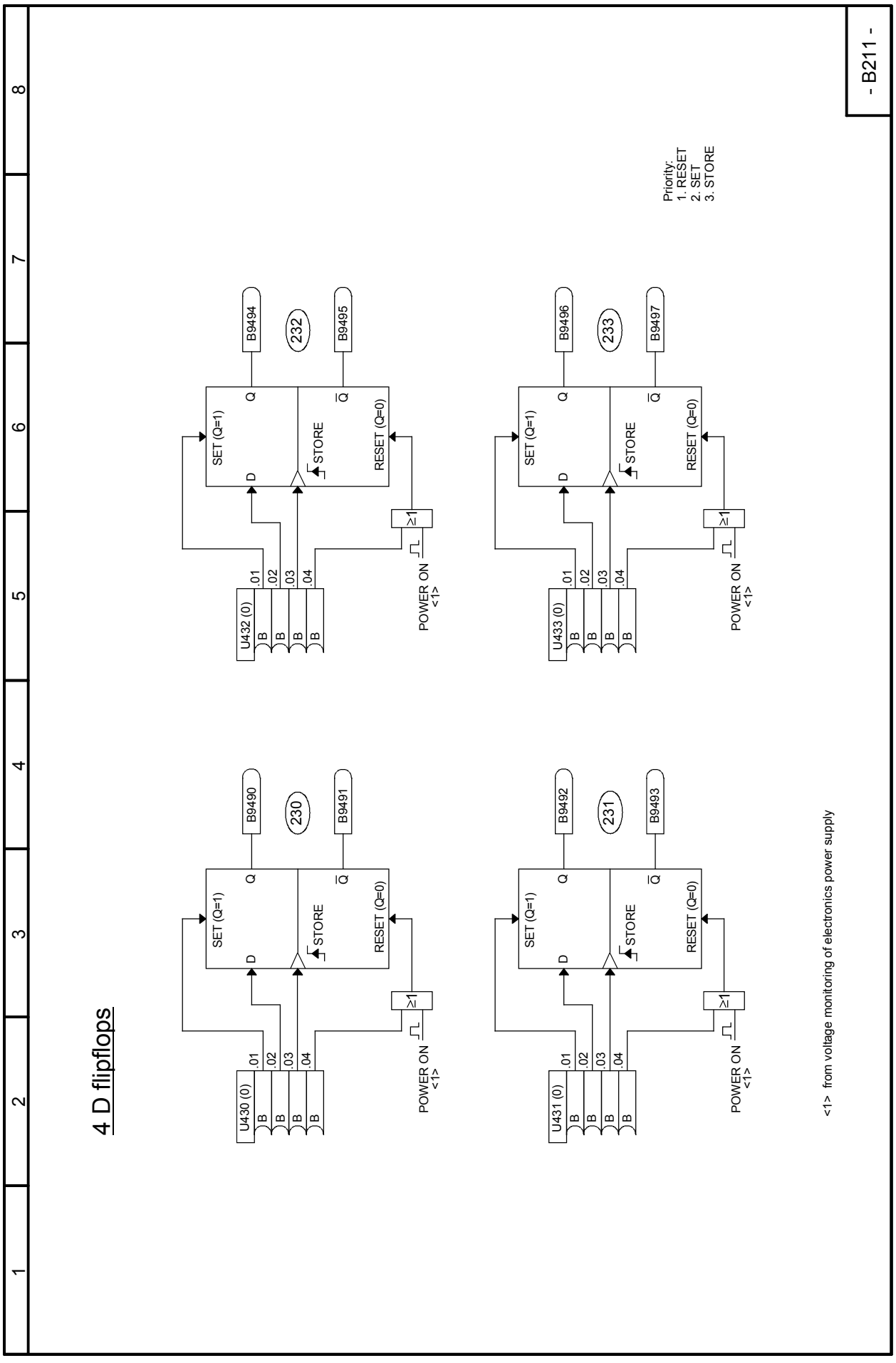

Sheet B215 Timers (0.000...60.000s)

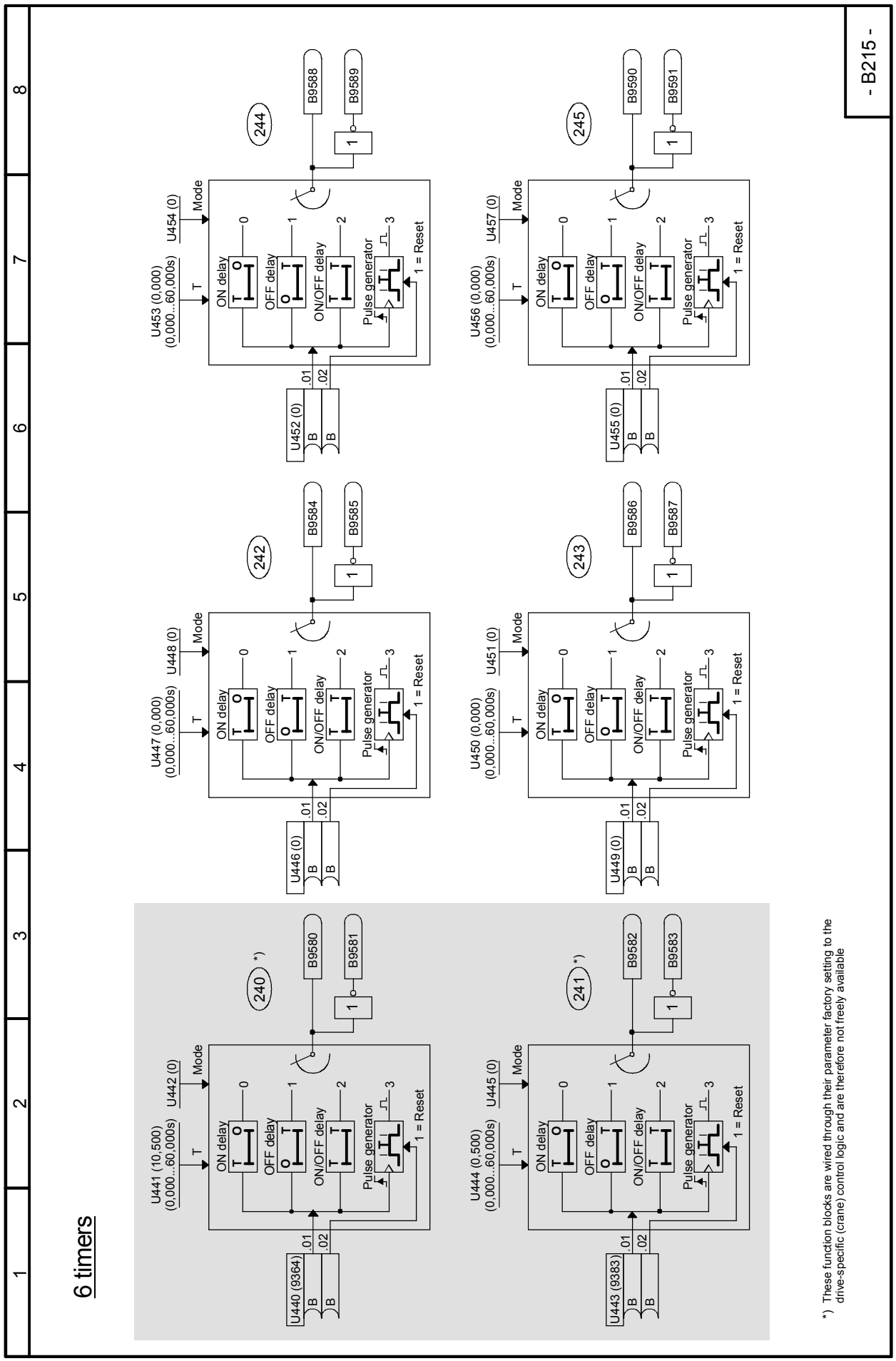

Sheet B216 Timers (0.00...600.00s), Binary signal selector switches

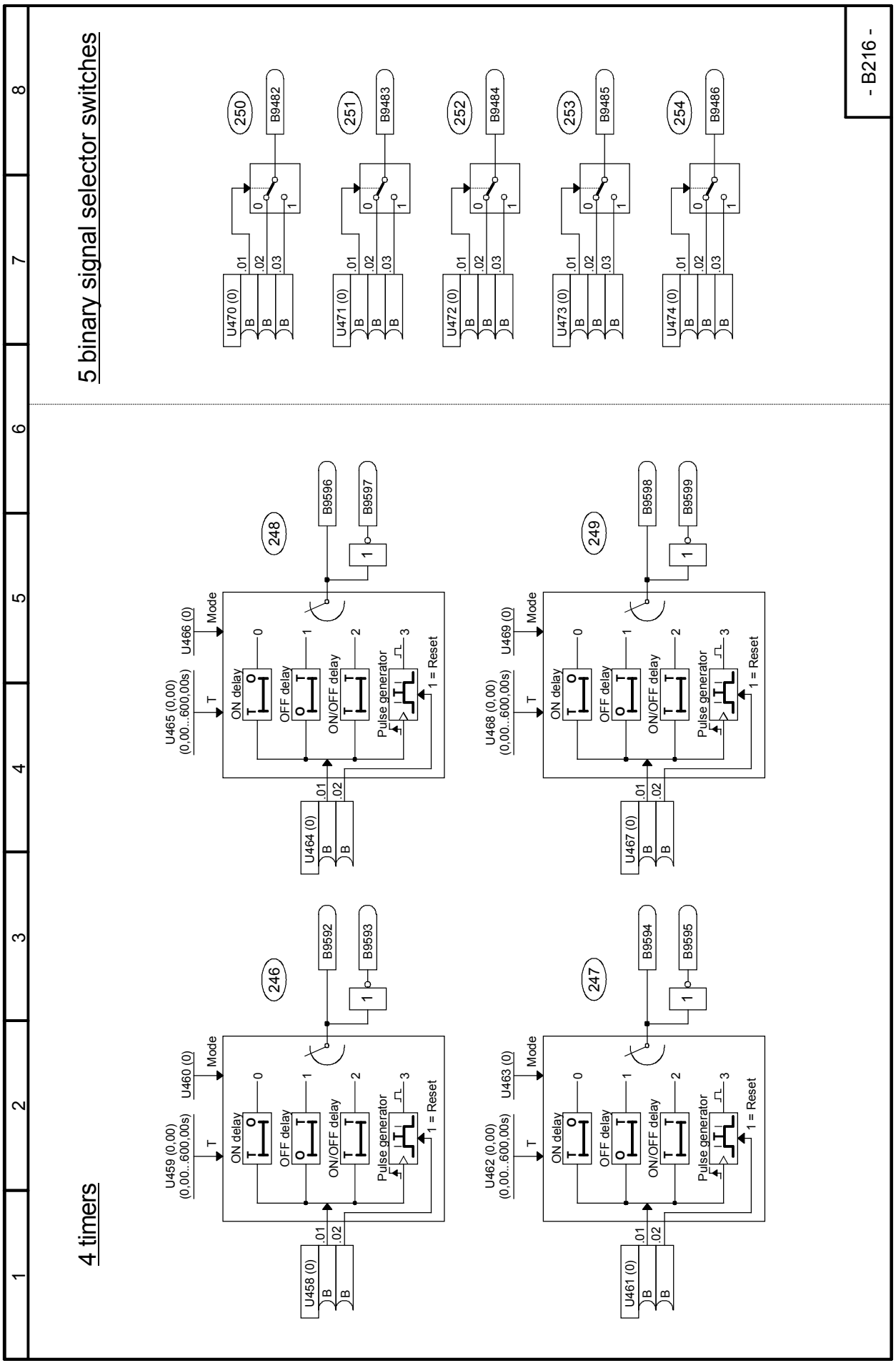

Optional supplementary boards Sheets Z100 to Z156

Sheet Z100 Table of contents

Function diagram SIMOTRAS 6SG70 - Contents of optional supplementary boards

Content	Sheet
Data exchange with a technology board (TB) or the 1st communication board (CB)	Z110
Data exchange with the 2nd communication board (CB)	Z111
1st EB1 analog inputs	Z112
1st EB1 analog outputs	Z113
1st EB1 bidirectional inputs/outputs, digital inputs	Z114
2nd EB1 analog inputs	Z115
2nd EB1 analog outputs	Z116
2nd EB1 bidirectional inputs/outputs, digital inputs	Z117
1st EB2 analog input, digital inputs, relay outputs	Z118
2nd EB2 analog input, digital inputs, relay outputs	Z119
SBP pulse encoder evaluation	Z120
SIMOLINK board configuration, diagnosis	Z121
SIMOLINK board receiving, transmitting	Z122
OP1S operator panel	Z123
Interfaces: connector-type converters	Z124
SCB1 with SCI1 as slave 1: binary inputs	Z130
SCB1 with SCI1 as slave 2: binary inputs	Z131
SCB1 with SCI1 as slave 1: binary outputs	Z135
SCB1 with SCI1 as slave 2: binary outputs	Z136
SCB1 with SCI2 as slave 1: binary inputs	Z140
SCB1 with SCI2 as slave 2: binary inputs	Z141
SCB1 with SCI2 as slave 1: binary outputs	Z145
SCB1 with SCI2 as slave 2: binary outputs	Z146
SCB1 with SCI1 as slave 1: analog inputs	Z150
SCB1 with SCI1 as slave 2: analog inputs	Z151
SCB1 with SCI1 as slave 1: analog outputs	Z155
SCB1 with SCI1 as slave 2: analog outputs	Z156

- Z100 -

Sheet Z110 Data exchange with a technology board (TB) or the 1st communications board (CB)

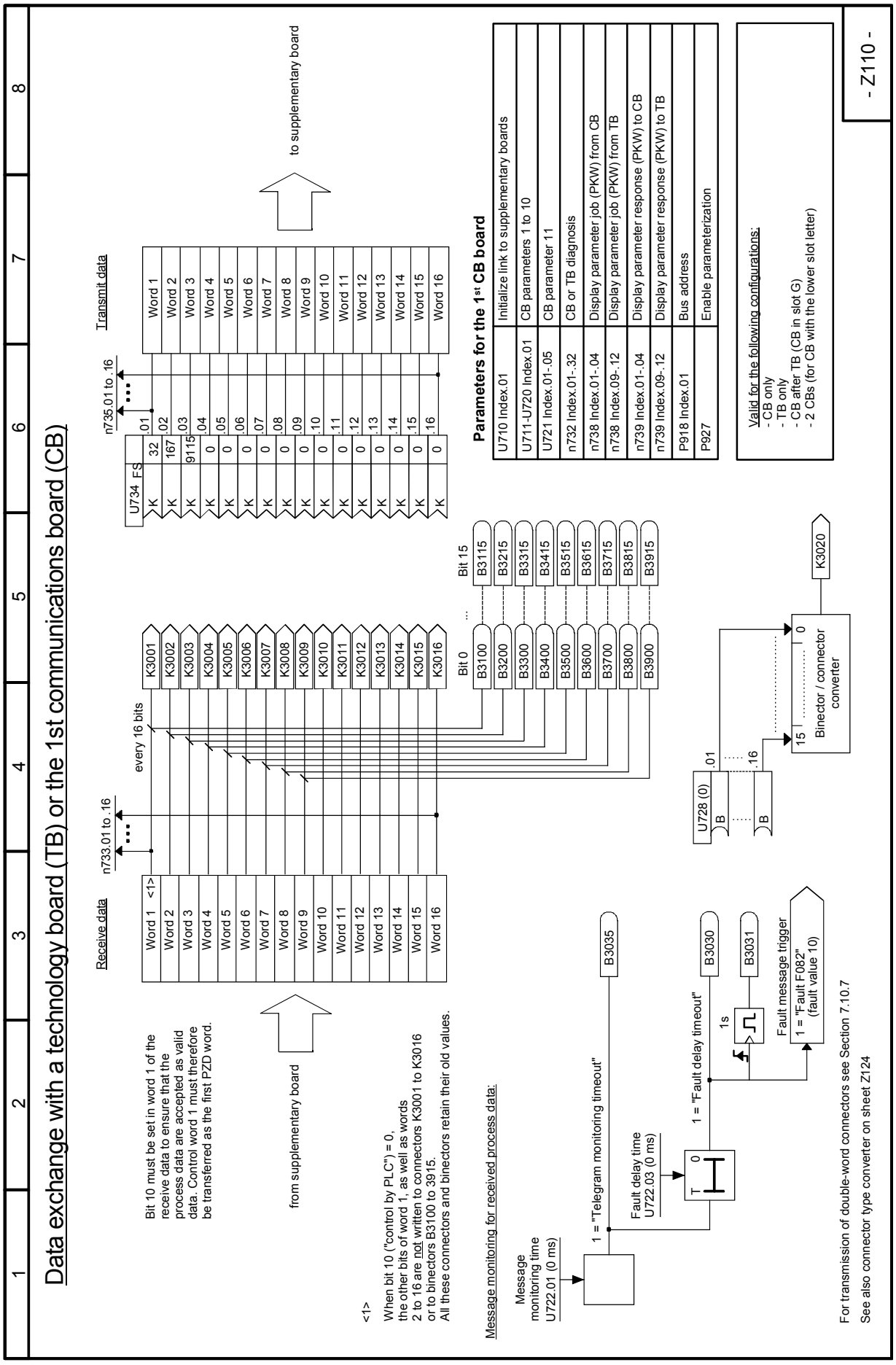

Sheet Z111 Data exchange with the 2nd communications board (CB)

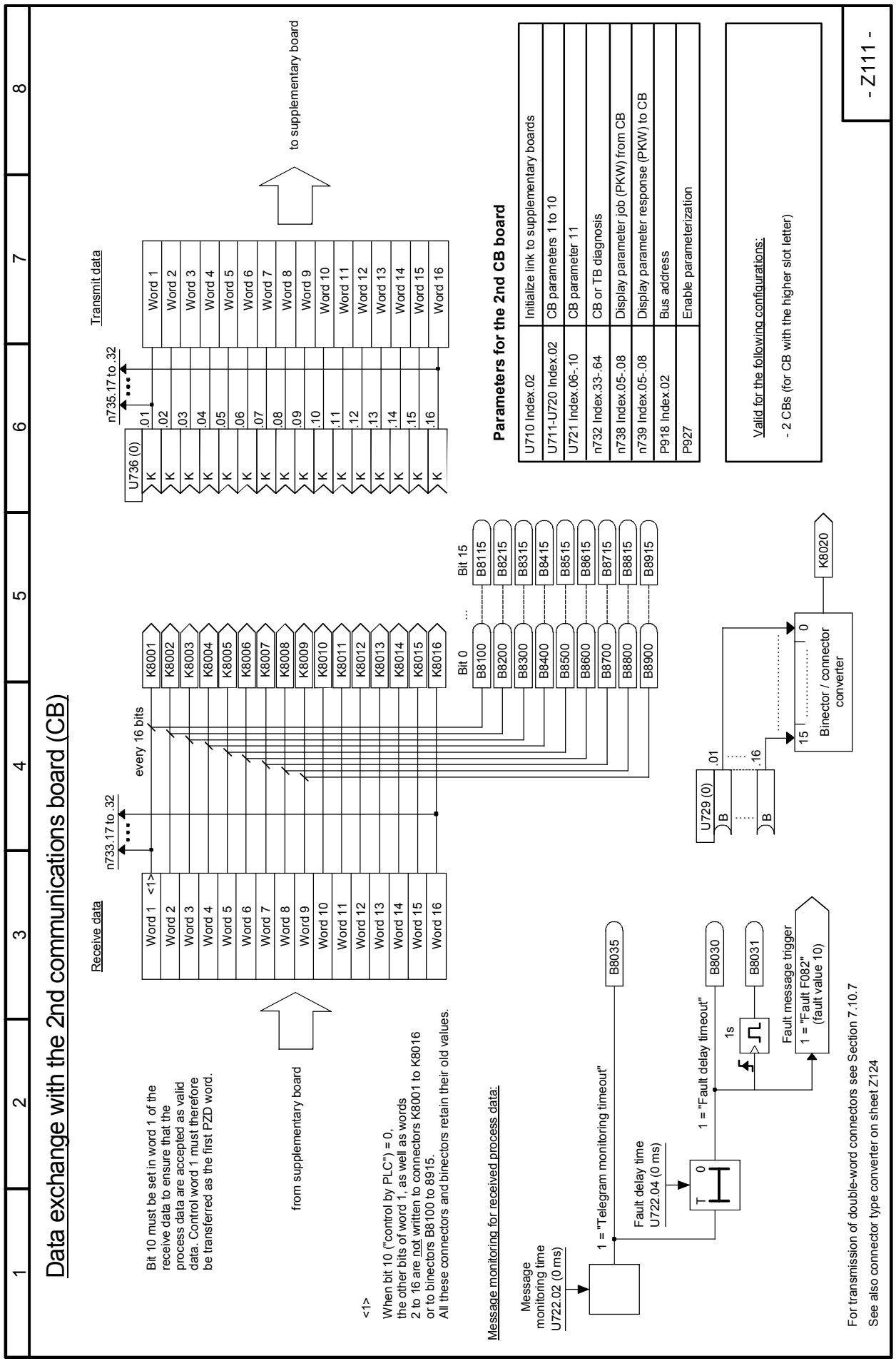

Sheet Z112 1st EB1: Analog inputs

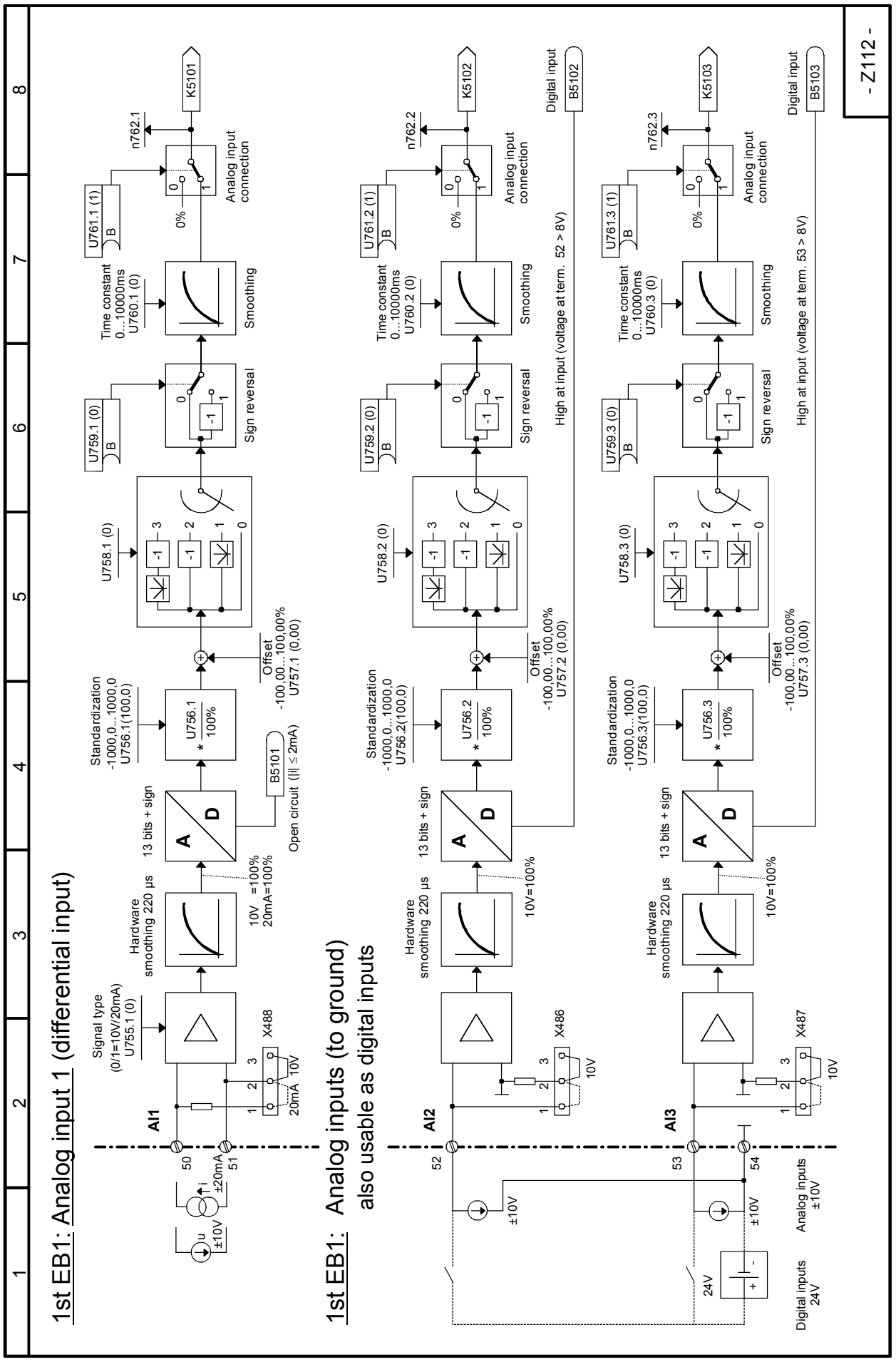

Sheet Z113 1st EB1: Analog outputs

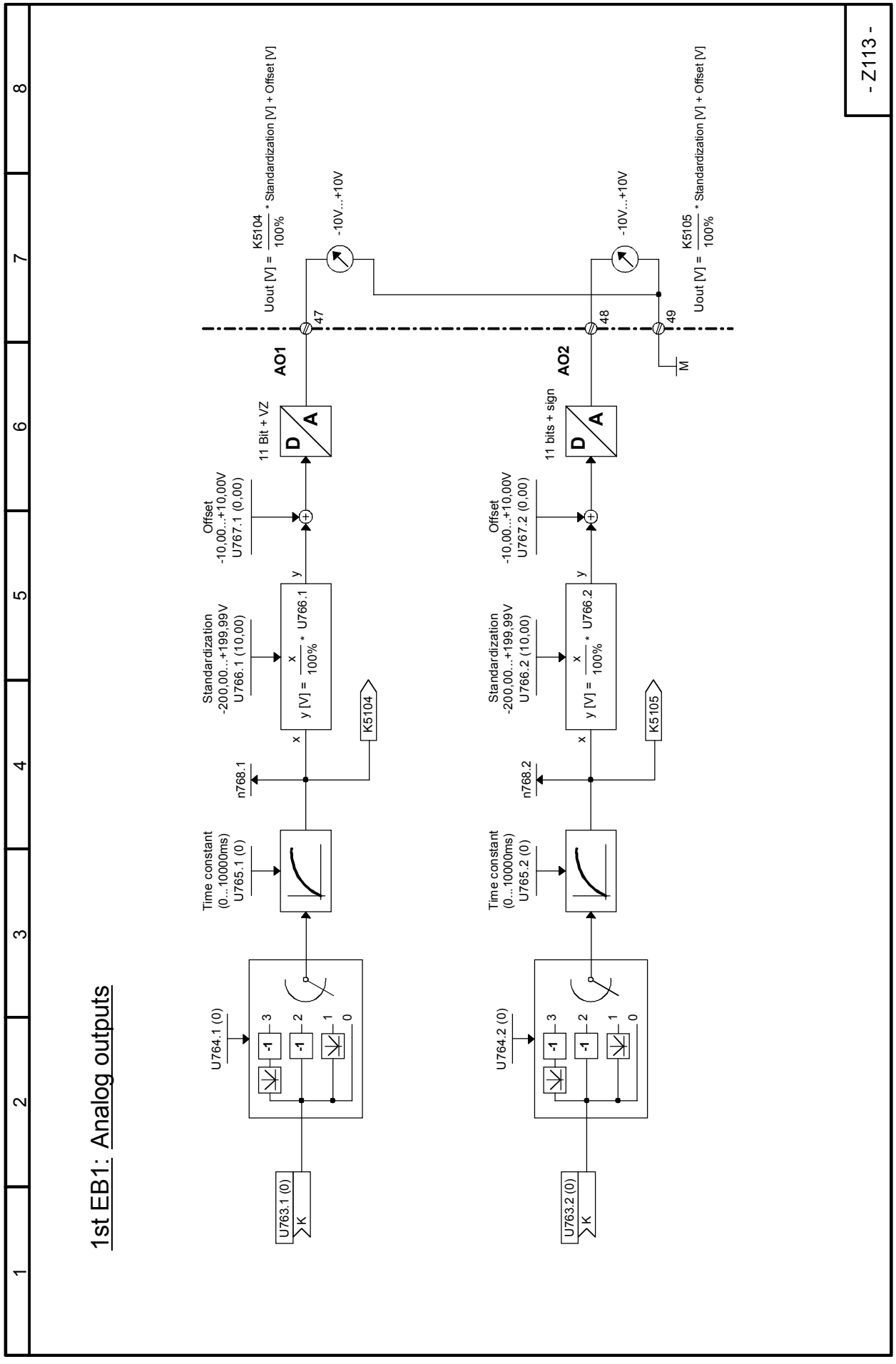

Sheet Z114 1st EB1: 4 bidirectional inputs- / outputs, 3 digital inputs

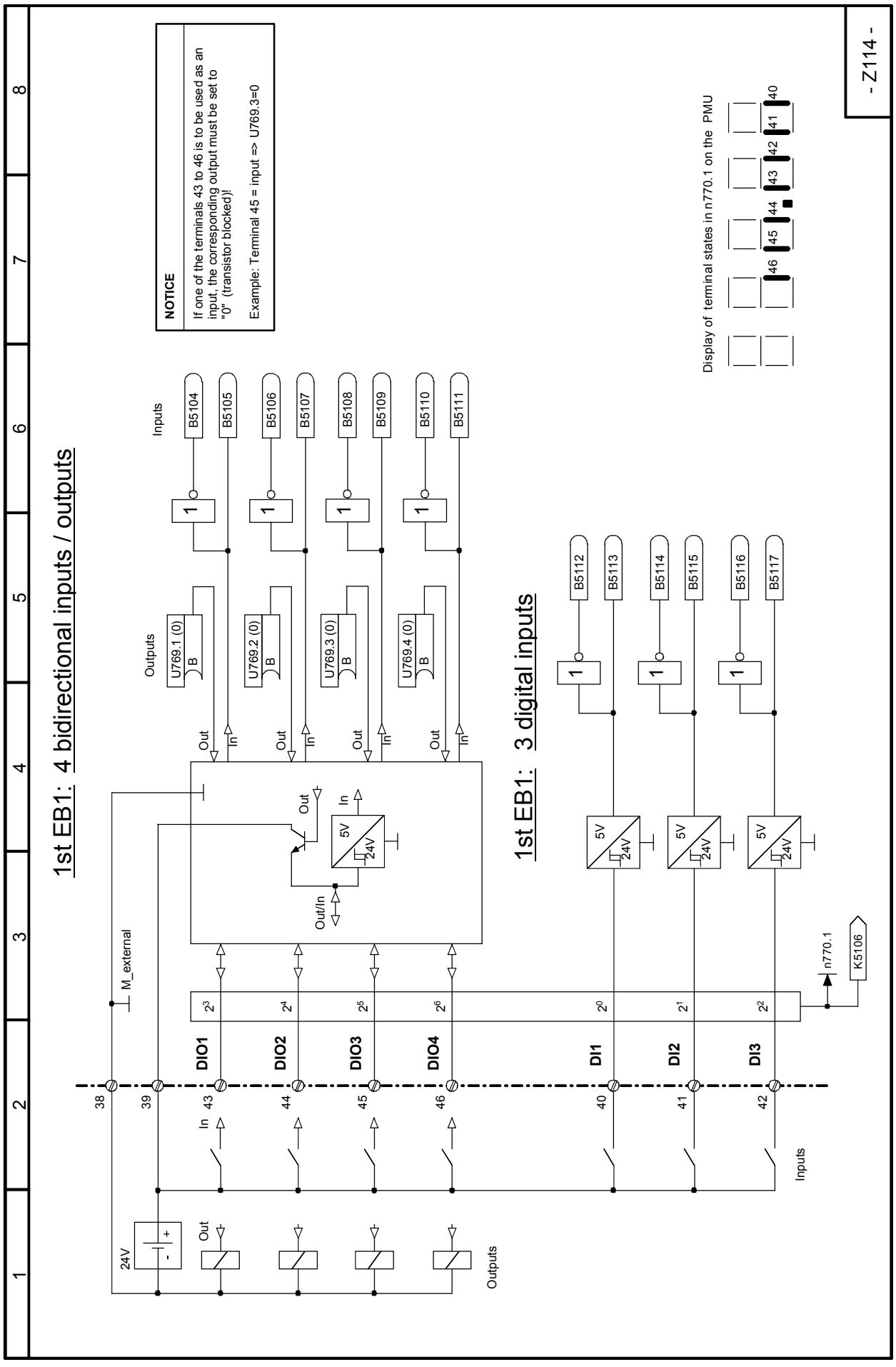

Sheet Z115 2nd EB1: Analog inputs

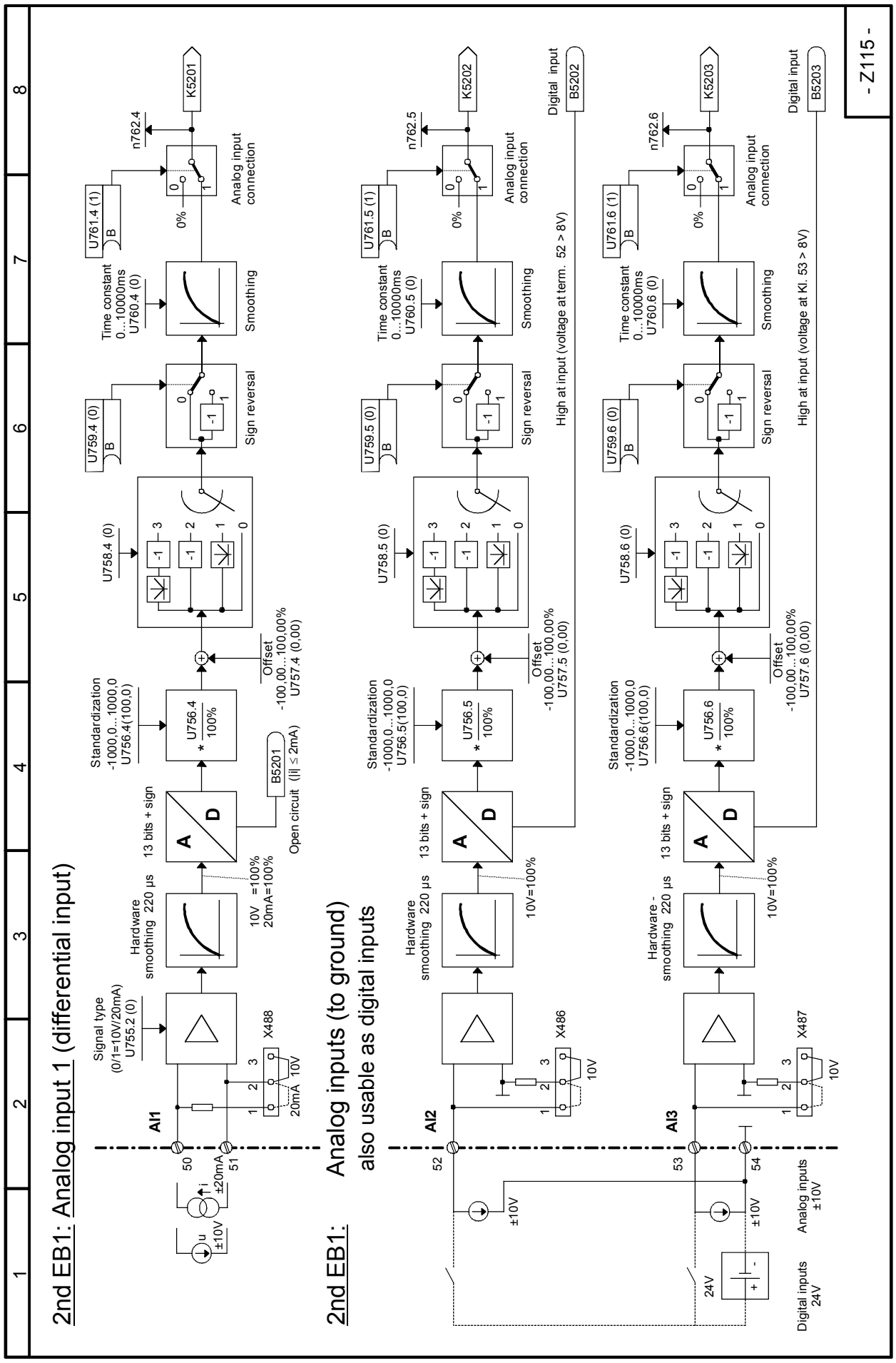

Sheet Z116 2nd EB1: Analog outputs

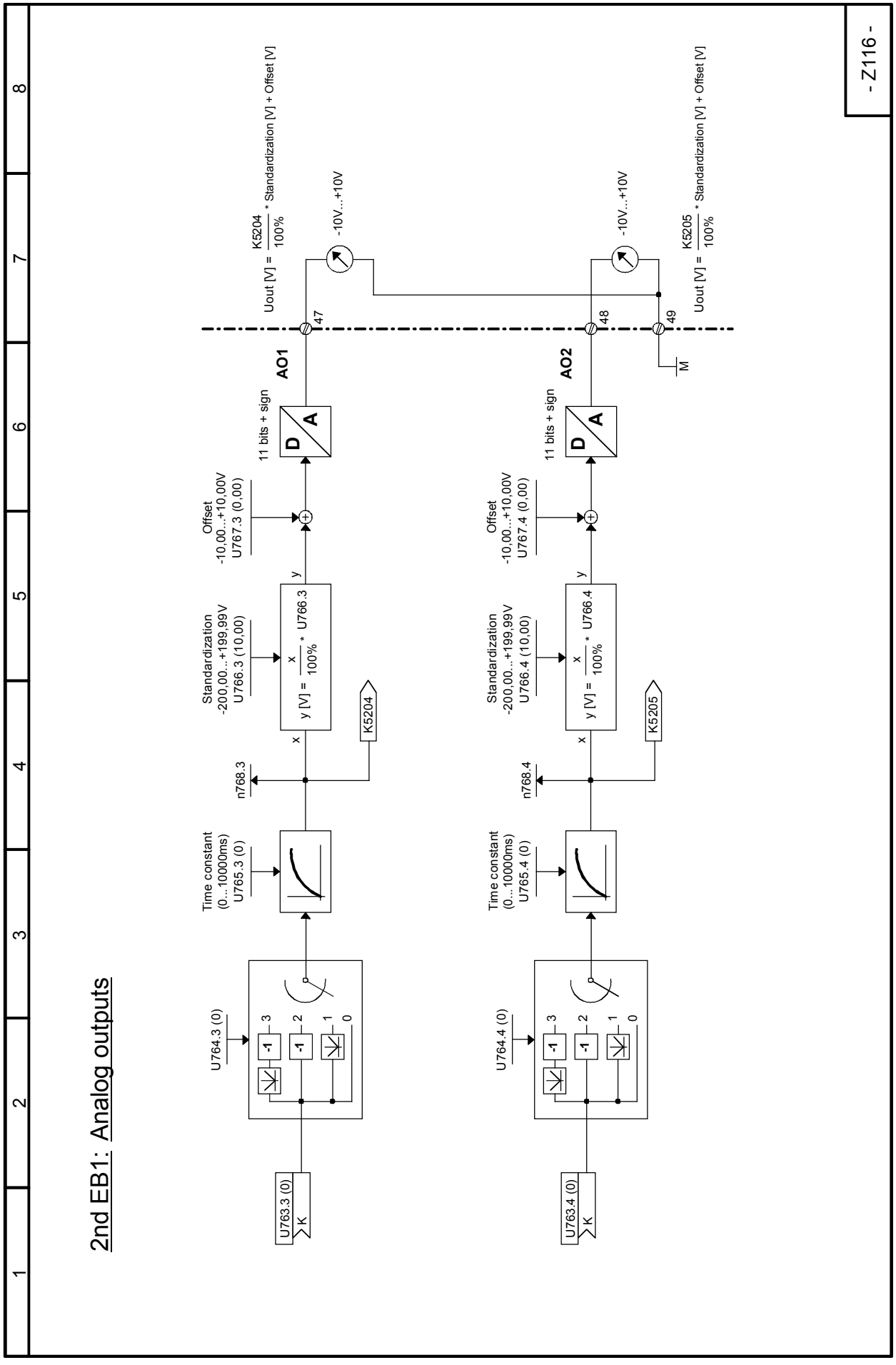

Sheet Z117 2nd EB1: 4 bidirectional inputs- / outputs, 3 digital inputs

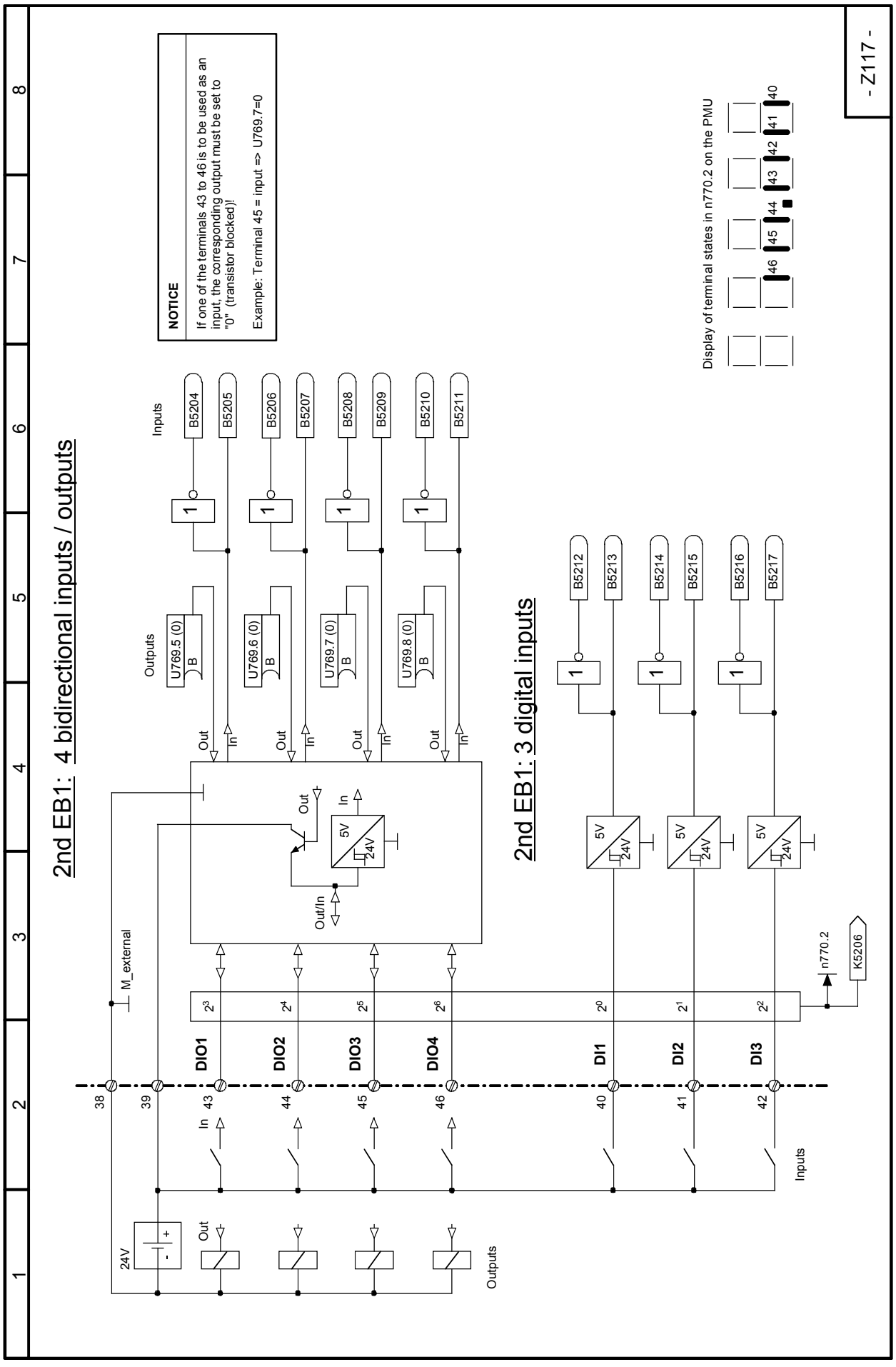

Sheet Z118 1st EB2: Analog input, Analog output, 2 digital inputs, 4 relay outputs

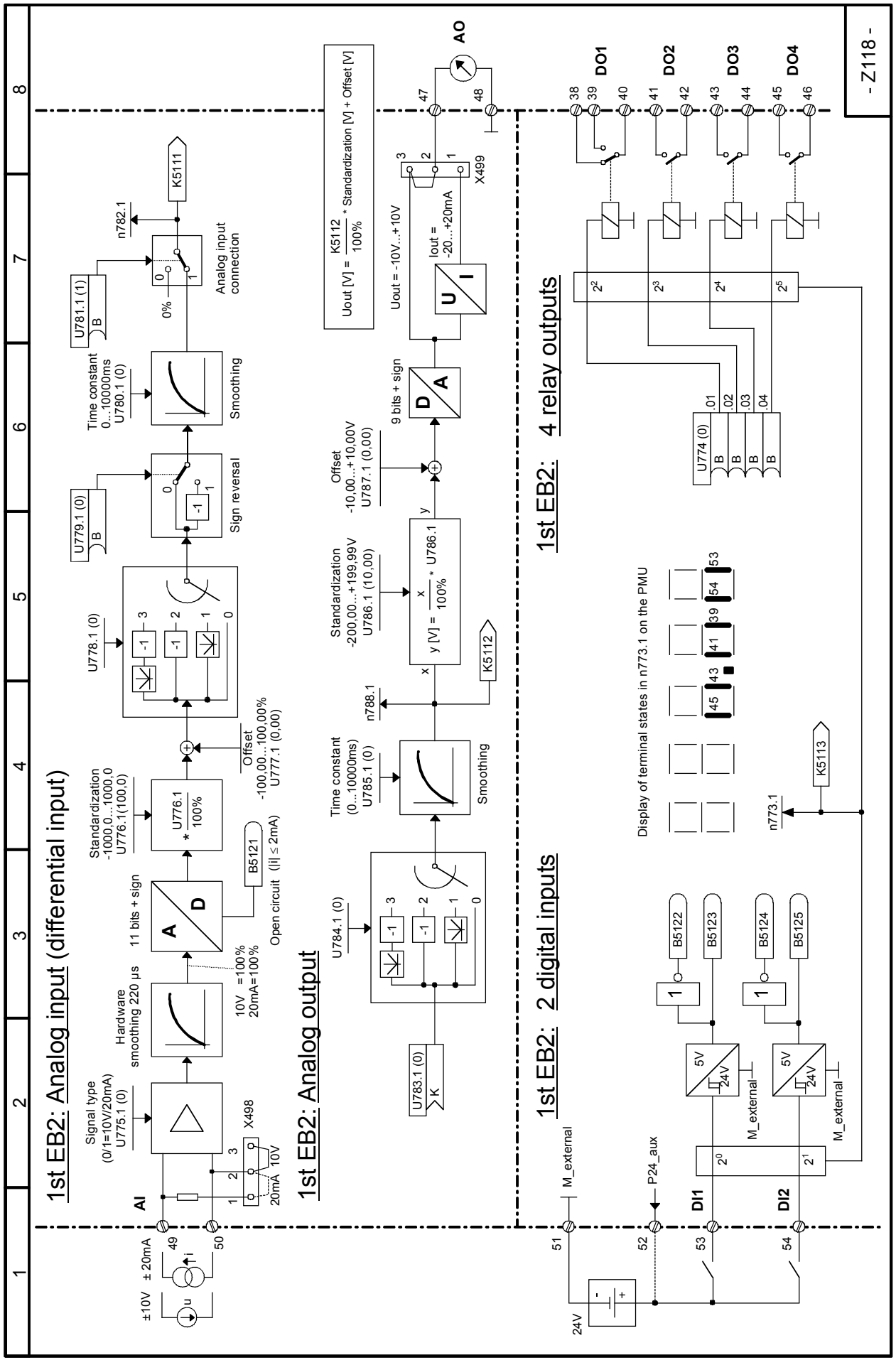

Sheet Z119 2nd EB2: Analog input, Analog output, 2 digital inputs, 4 relay outputs

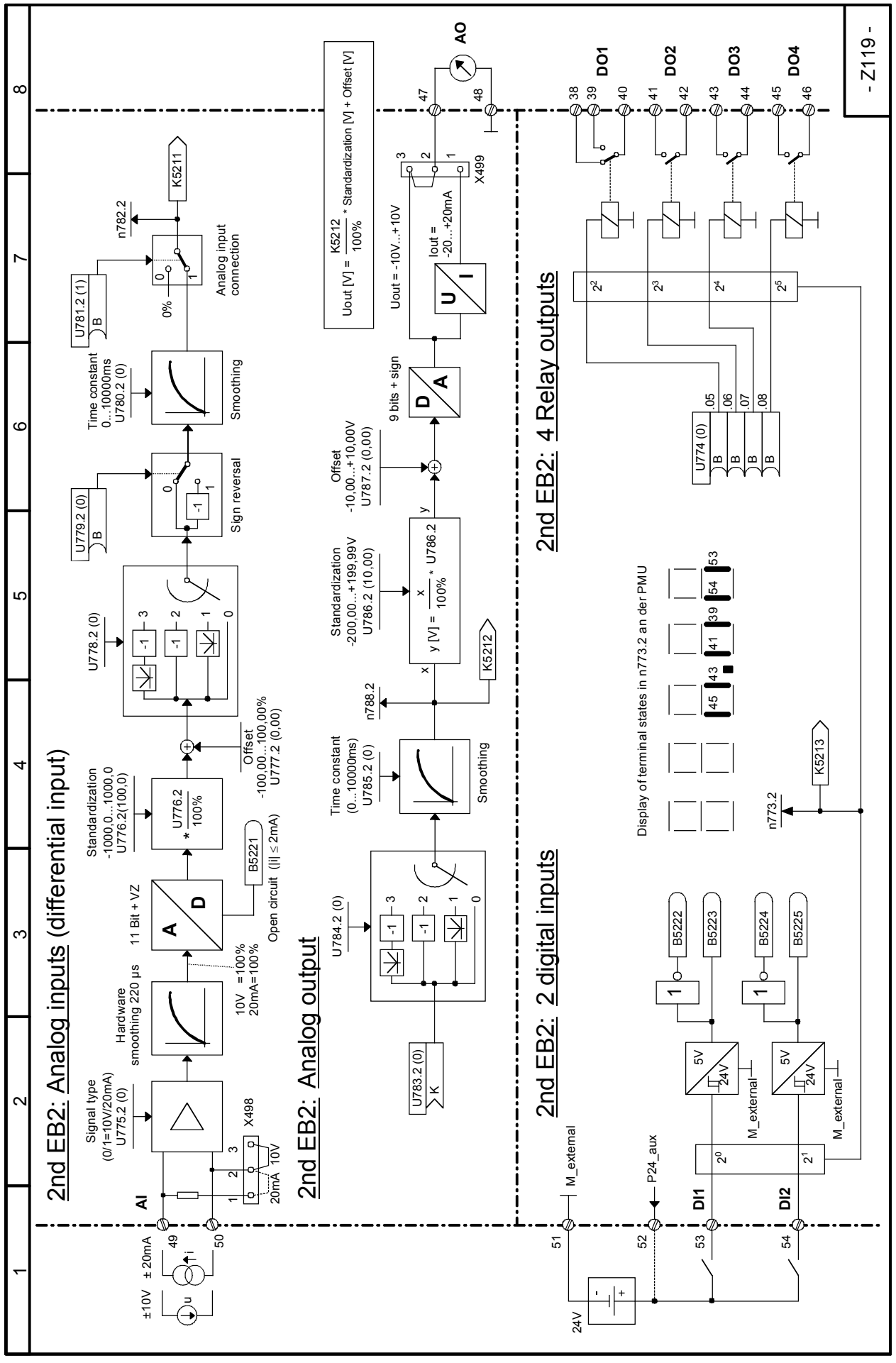

Sheet Z120 SBP pulse encoder evaluation

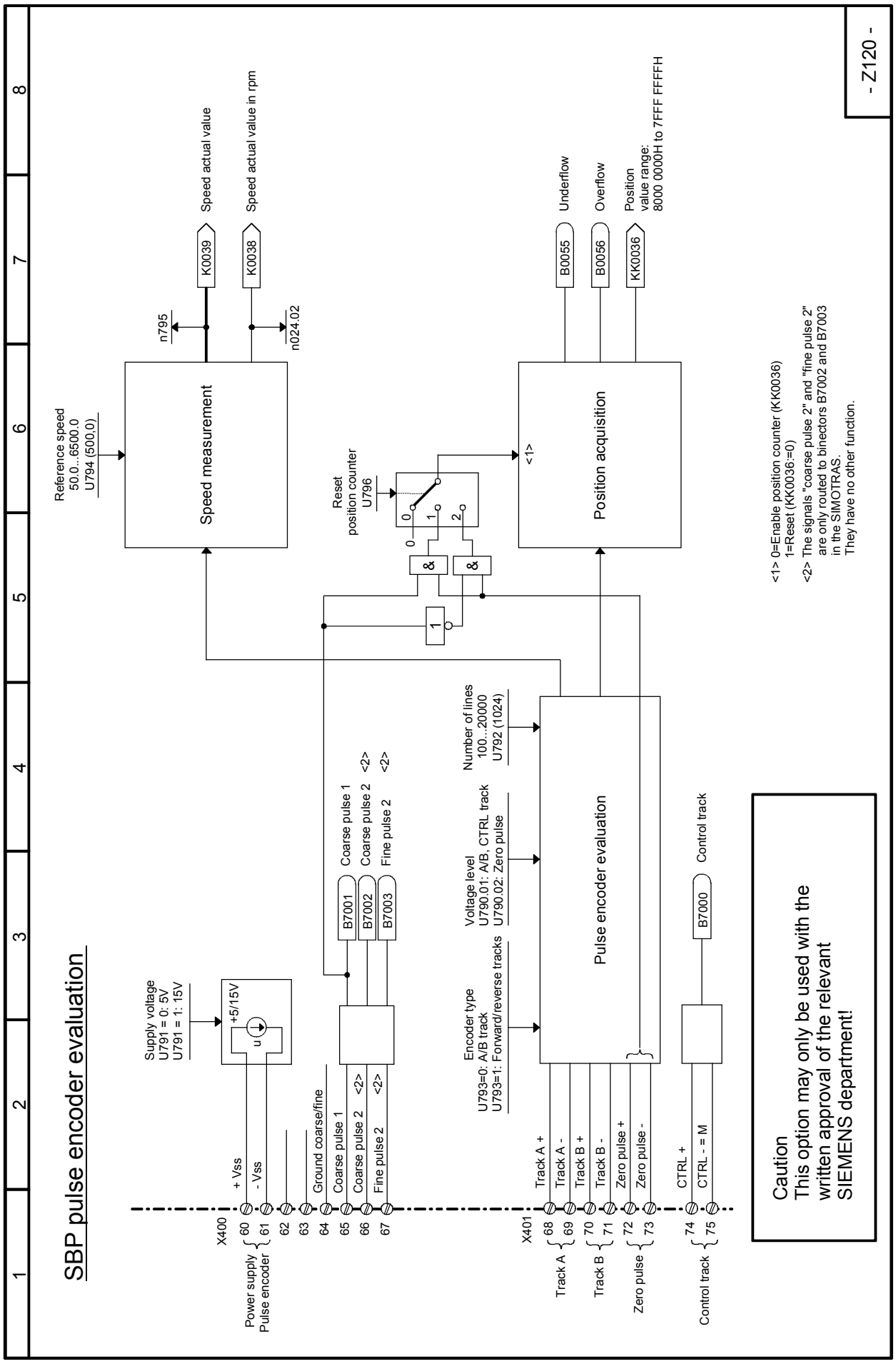

Sheet Z121 SIMOLINK board: Configuration, diagnosis

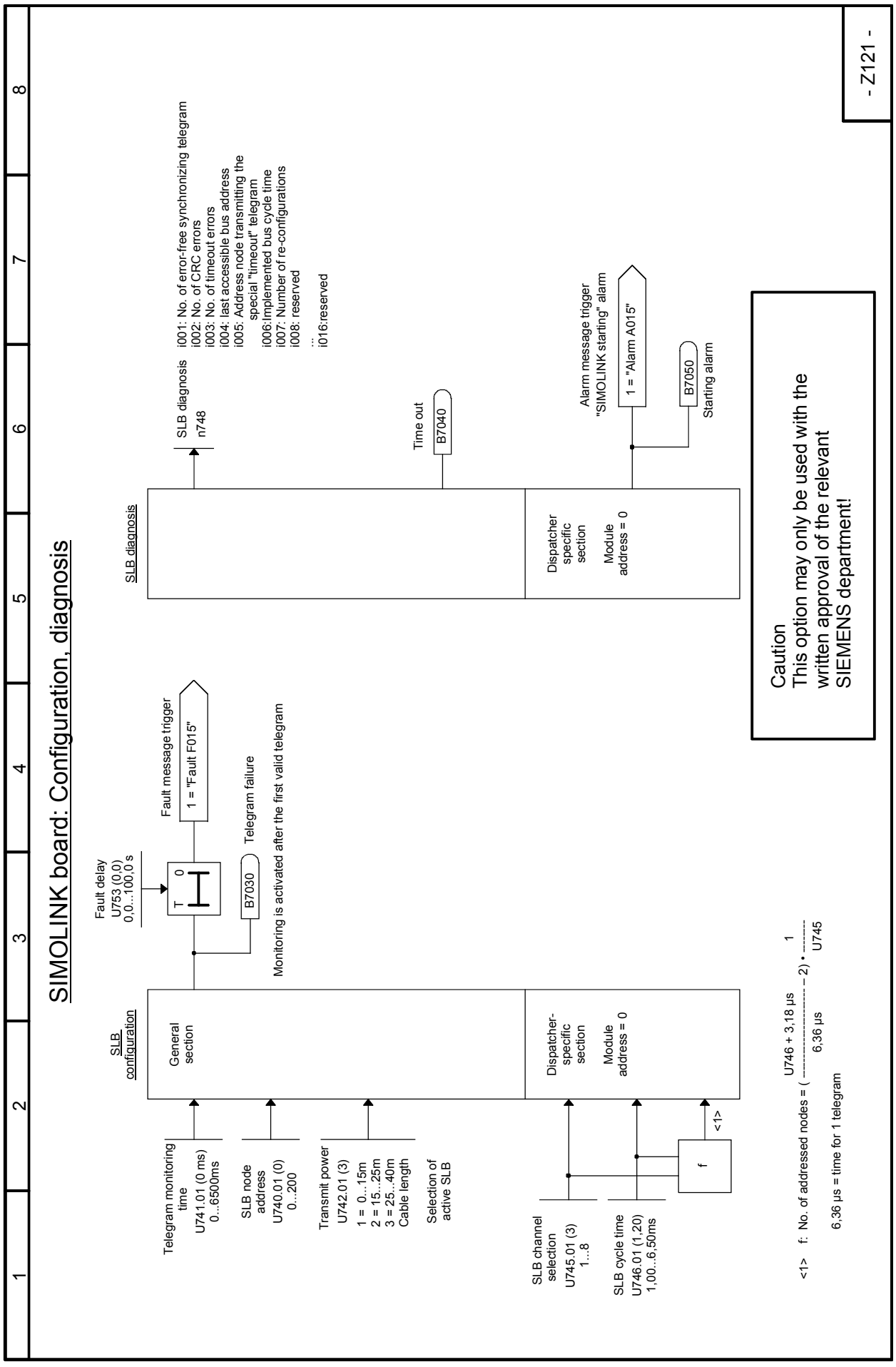

Sheet Z122 SIMOLINK board: Receiving, transmitting

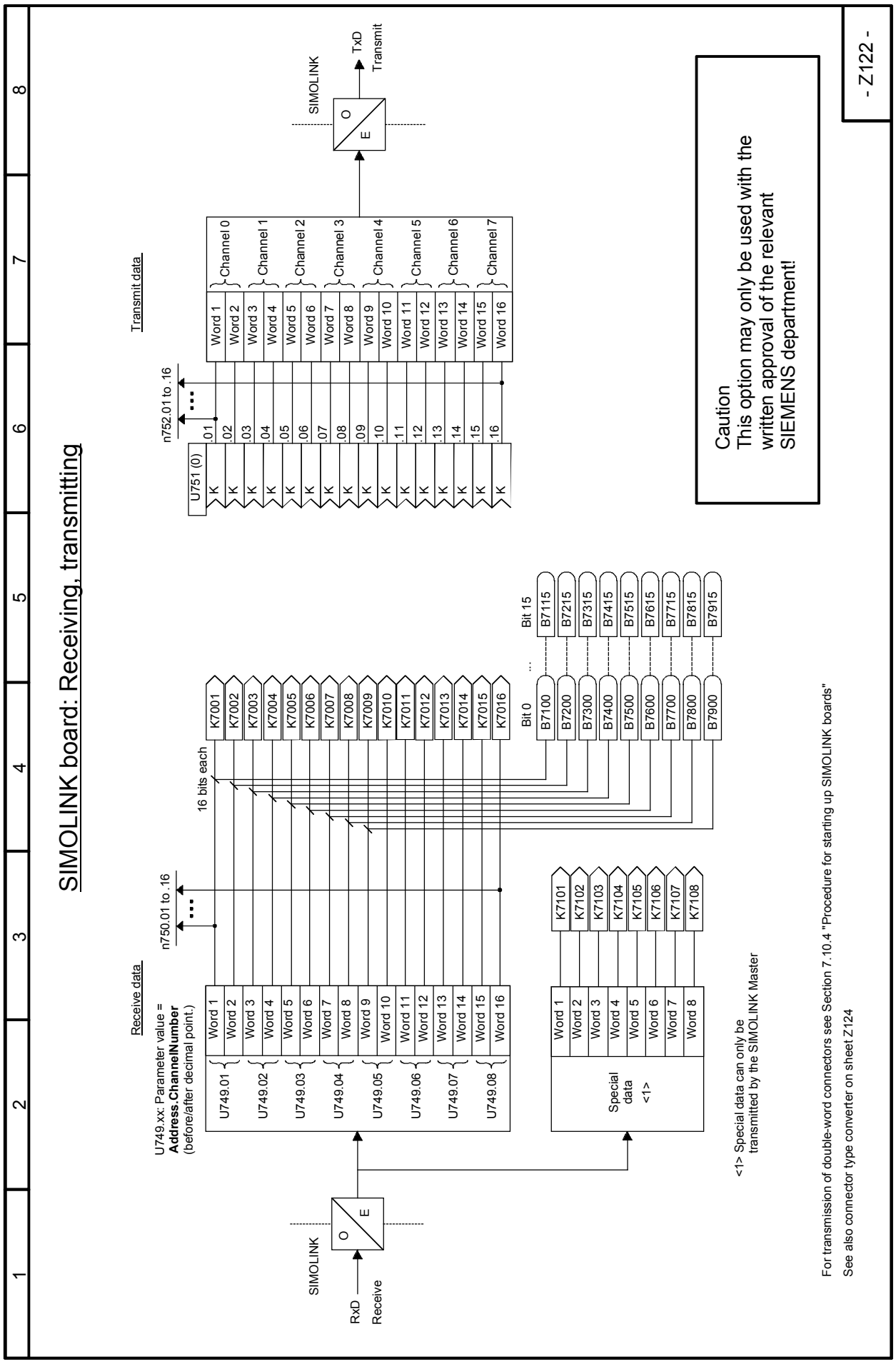

Sheet Z123 OP1S operator panel

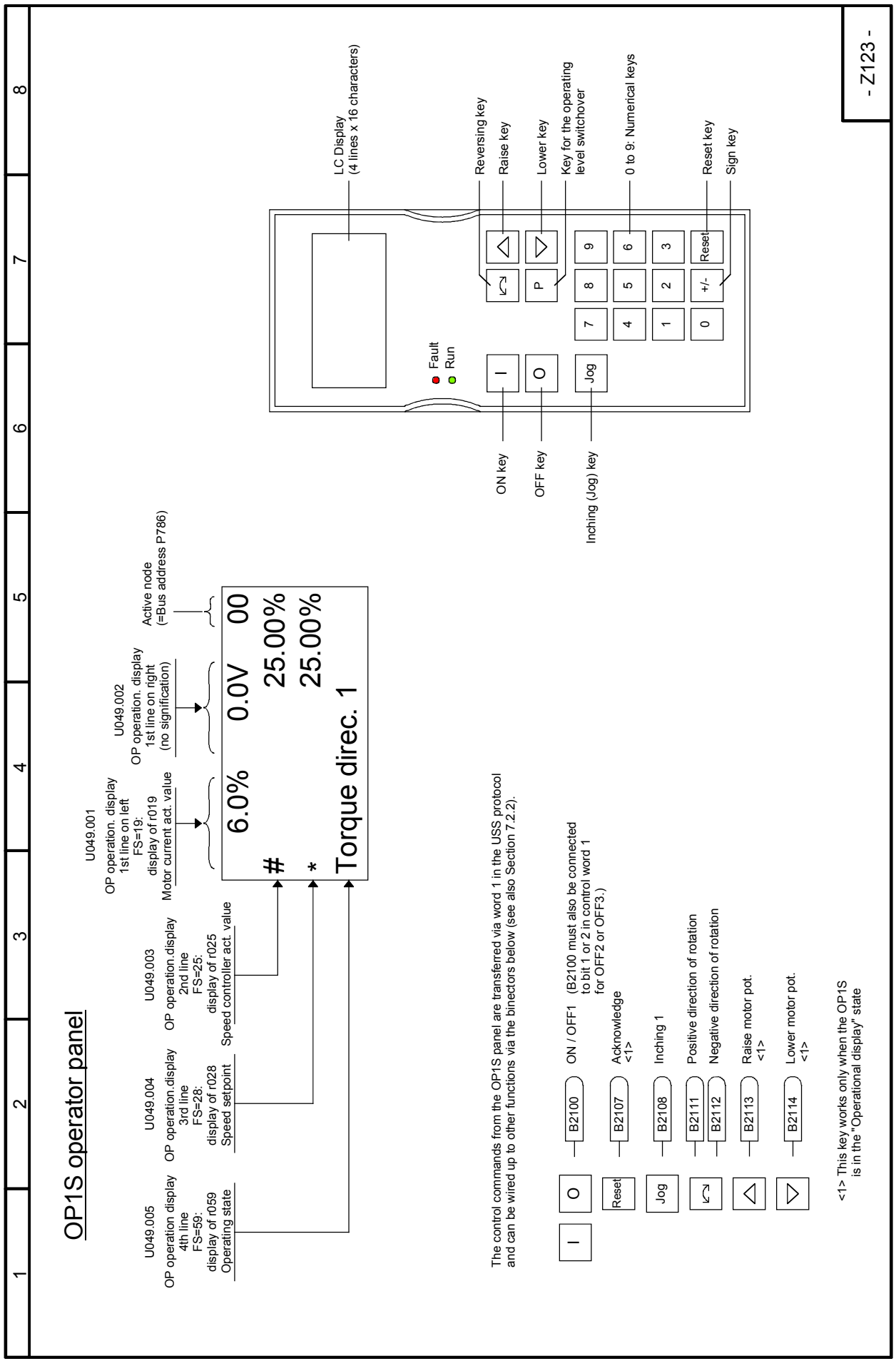

Sheet Z124 Interfaces: connector-type converters

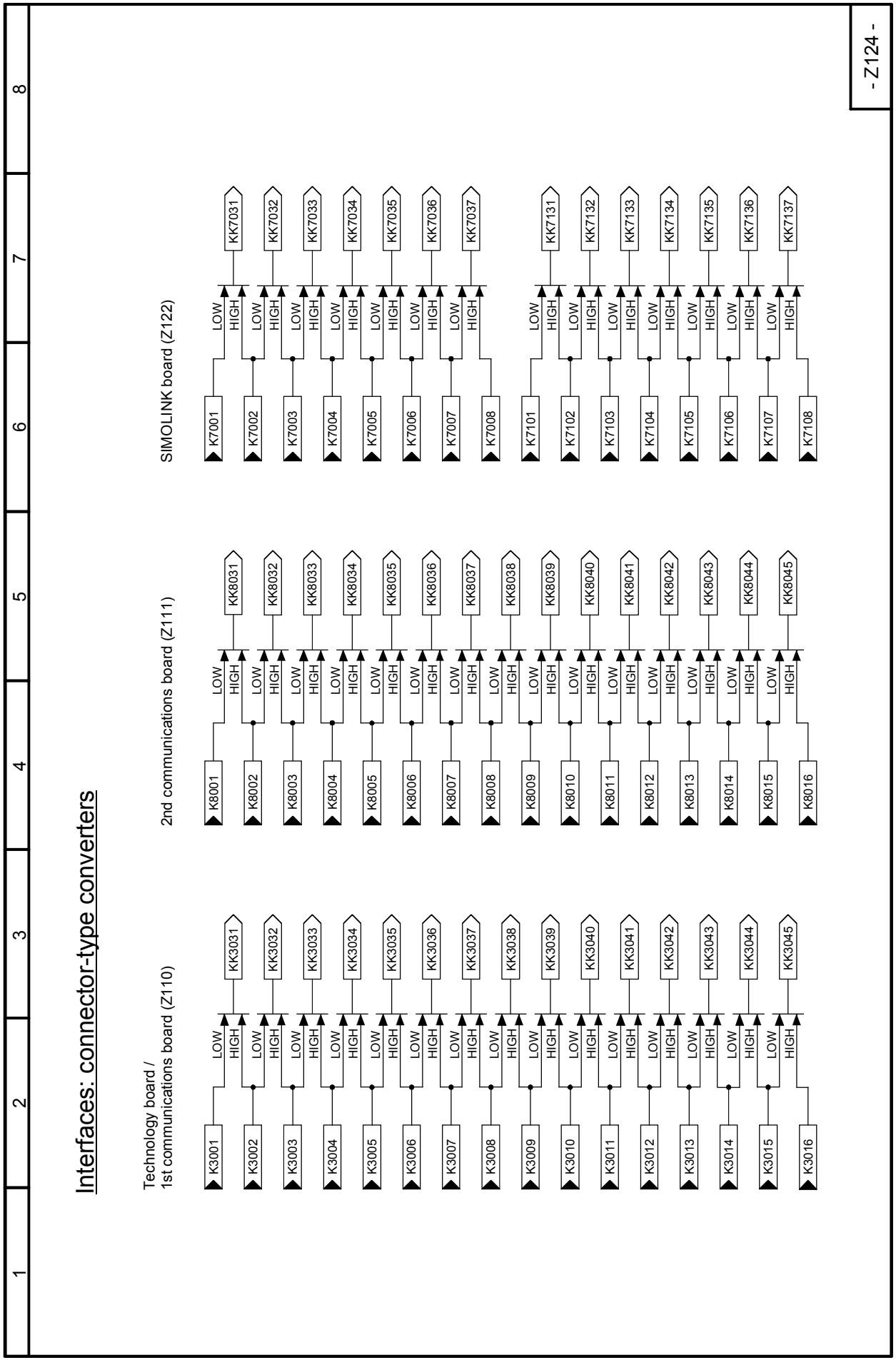

Sheet Z130 SCB1 with SCI1 as slave 1: binary inputs

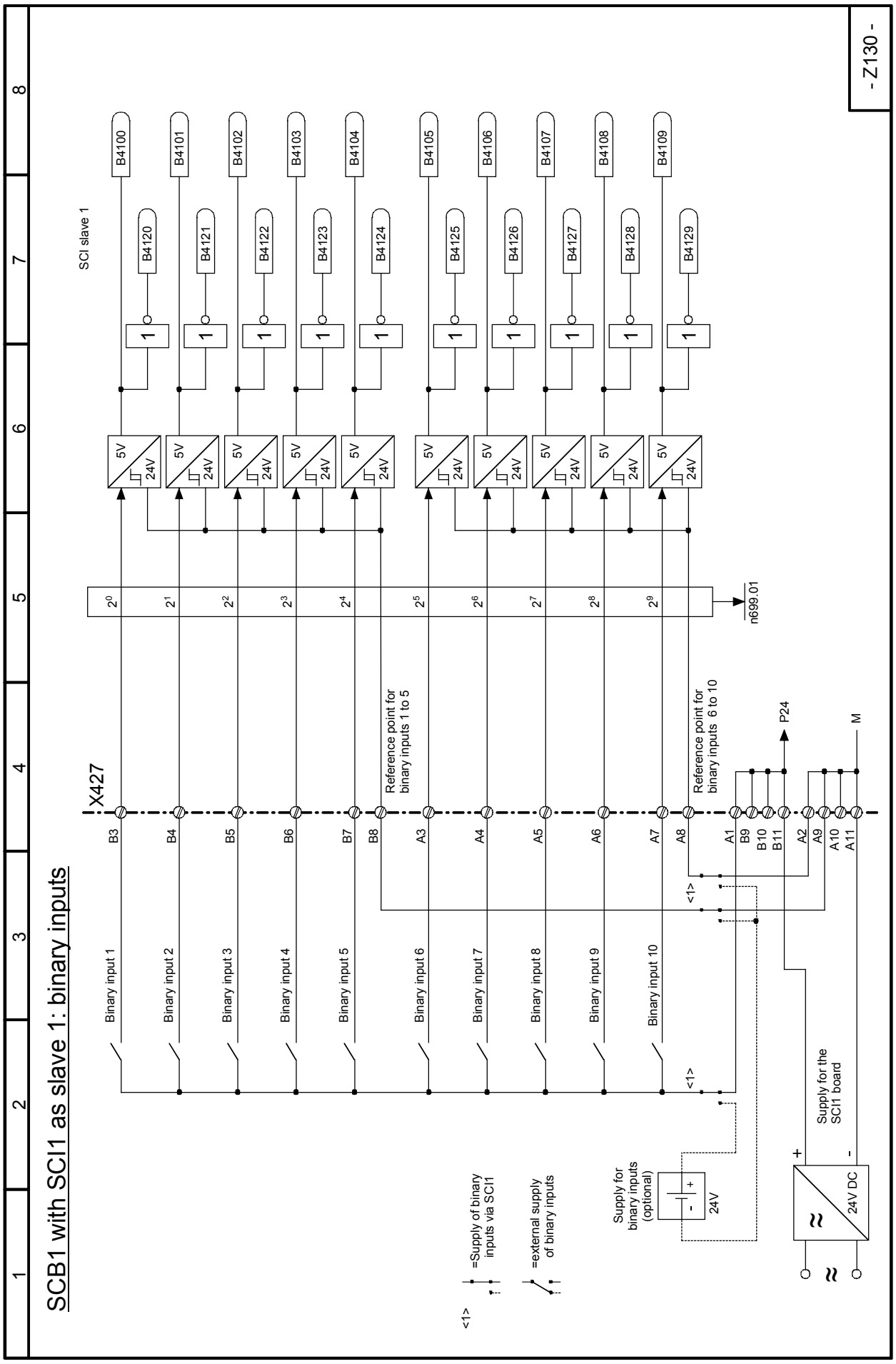

Sheet Z131 SCB1 with SCI1 as slave 2: binary inputs

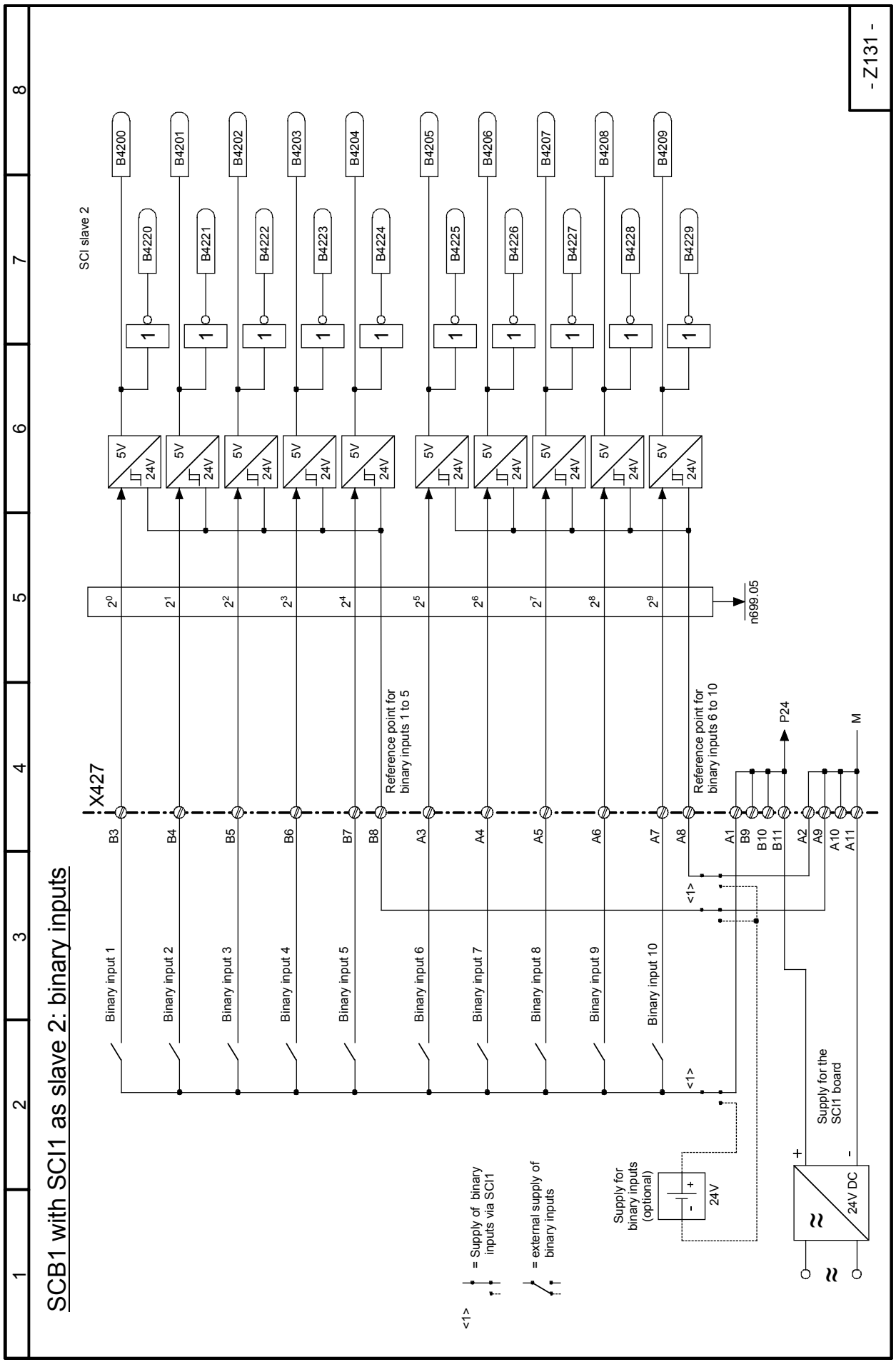

Sheet Z135 SCB1 with SCI1 as slave 1: binary outputs

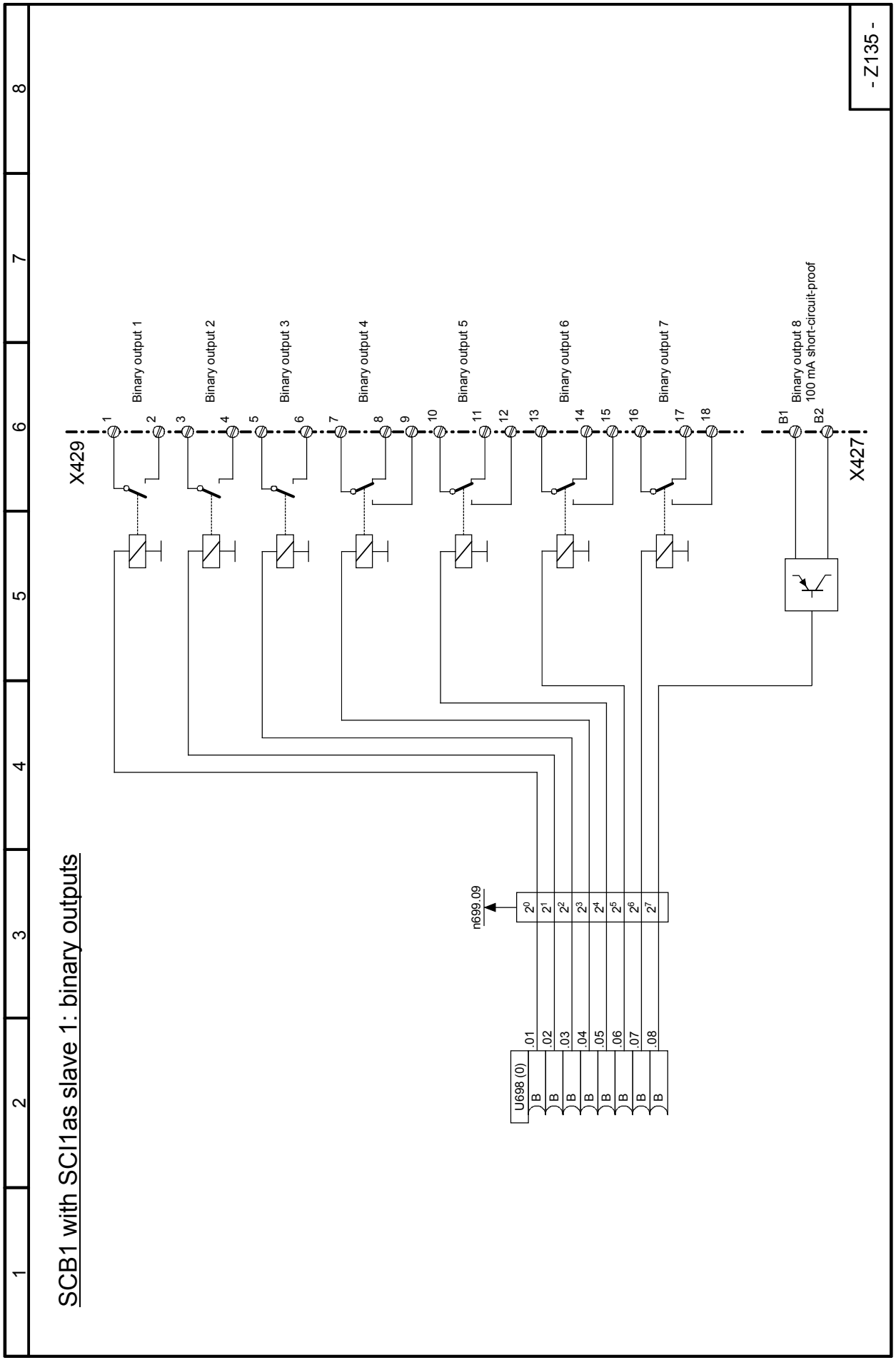

Sheet Z136 SCB1 with SCI1 as slave 2: binary outputs

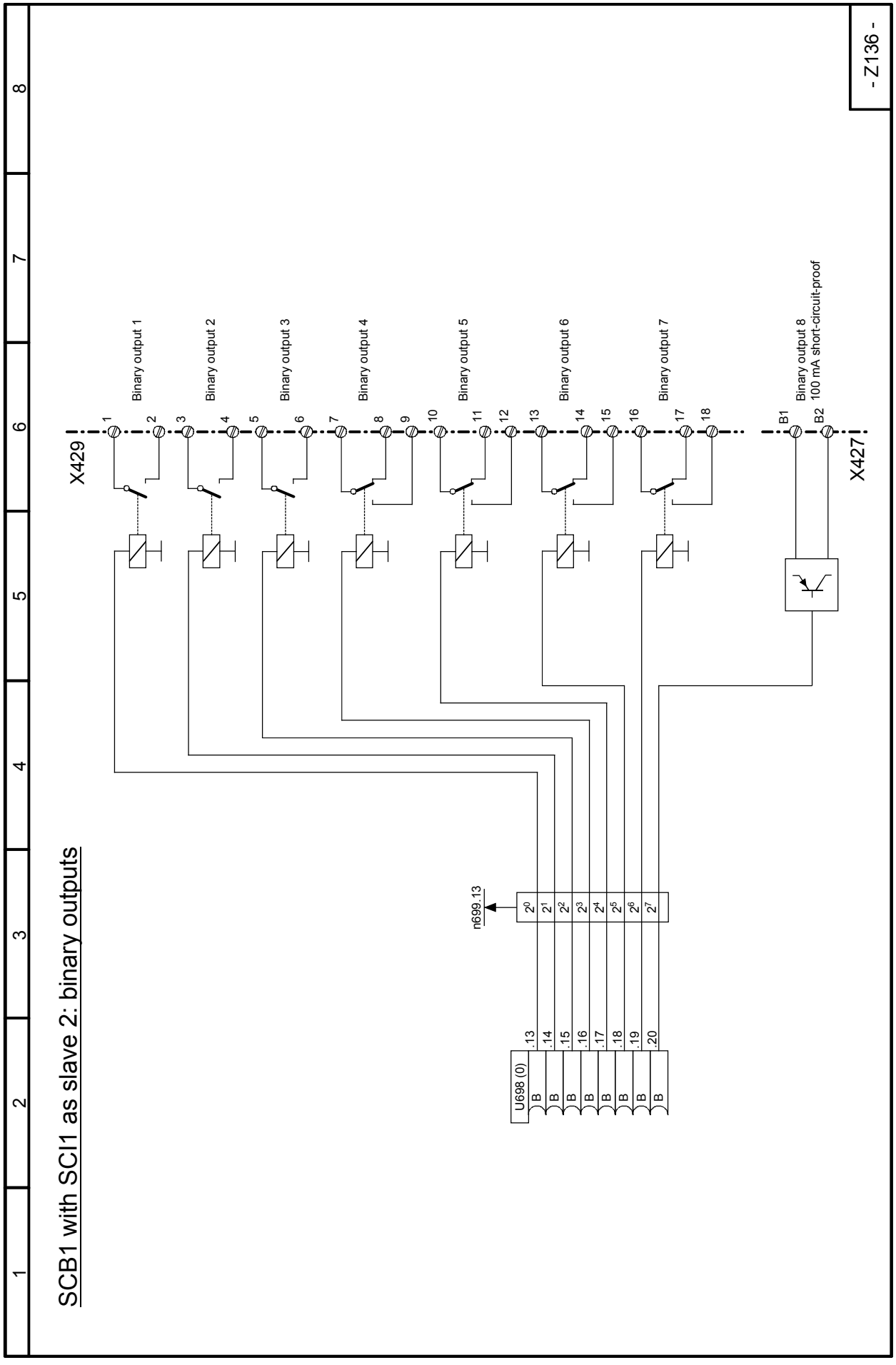

Sheet Z140 SCB1 with SCI2 as slave 1: binary inputs

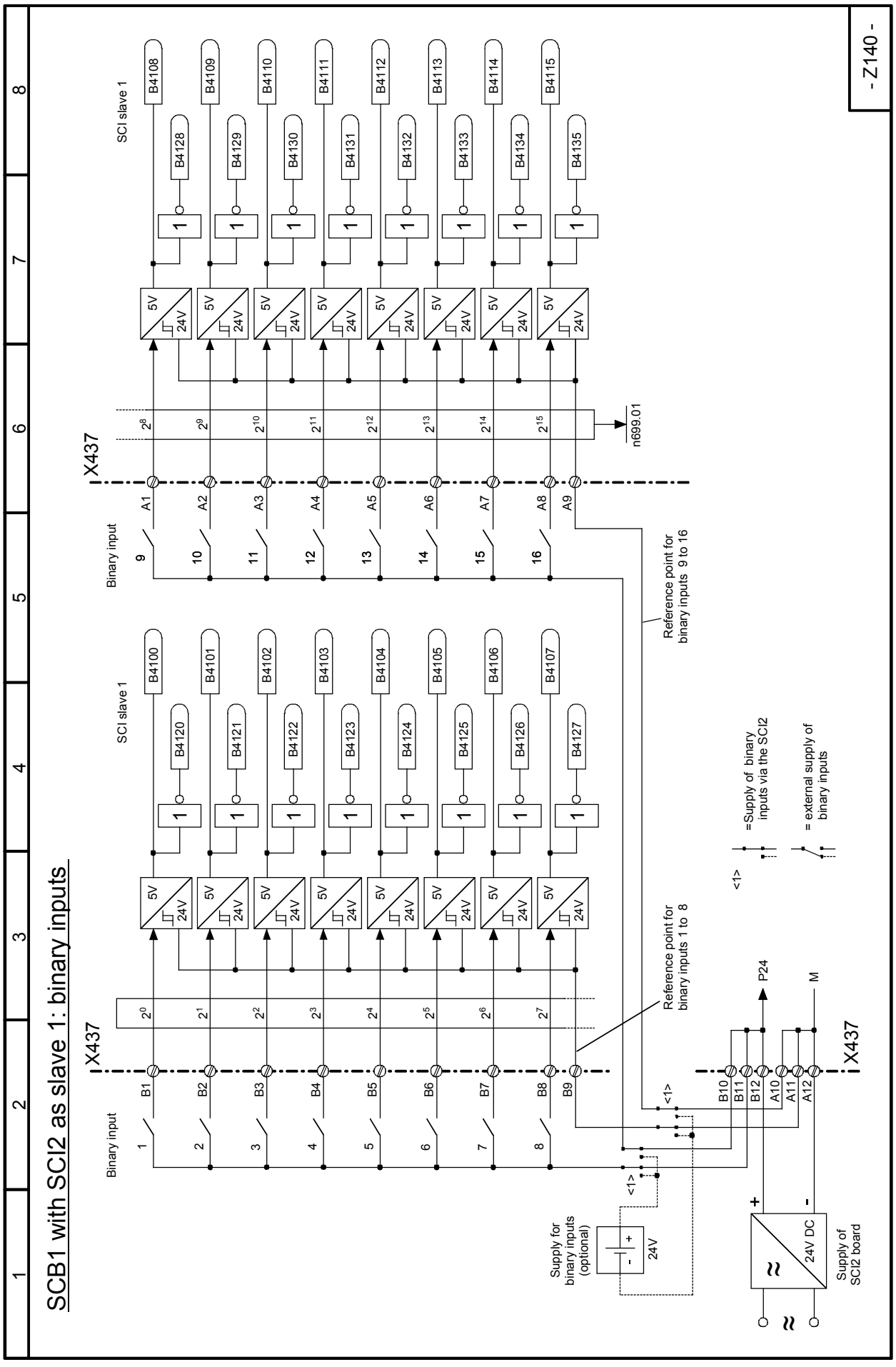

Sheet Z141 SCB1 with SCI2 as slave 2: binary inputs

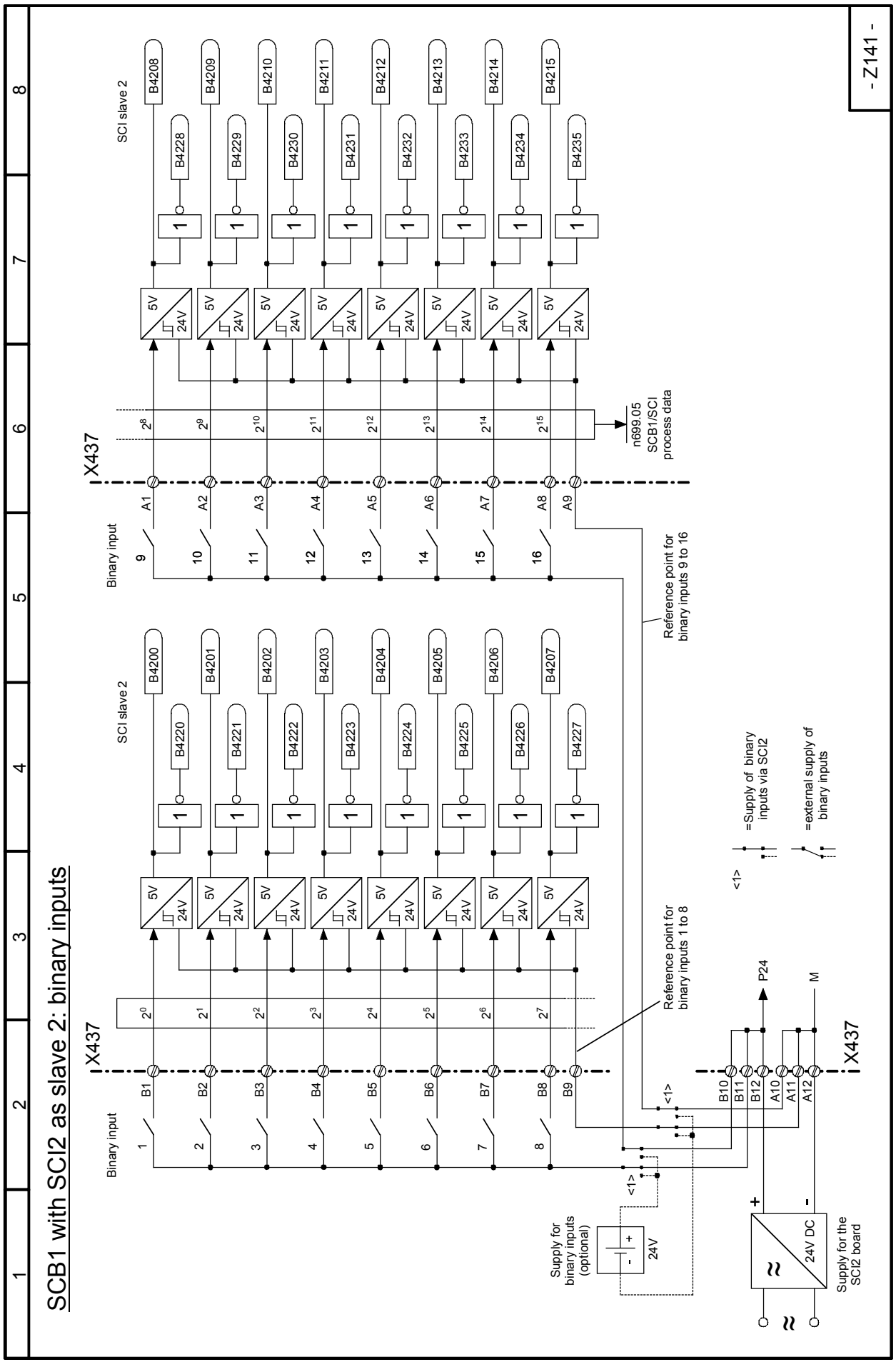

Sheet Z145 SCB1 with SCI2 as slave 1: binary outputs

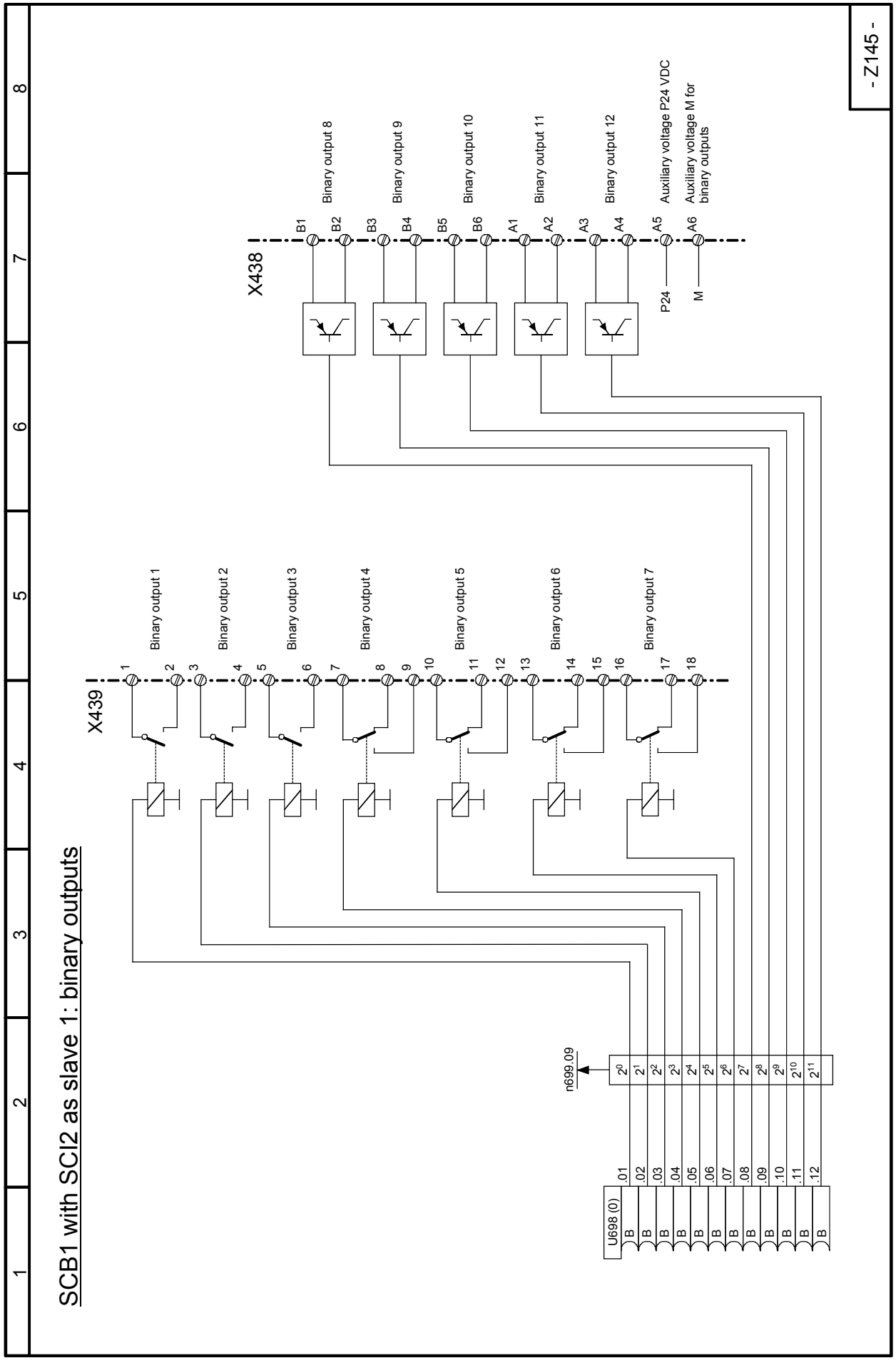

Sheet Z146 SCB1 with SCI2 as slave 2: binary outputs

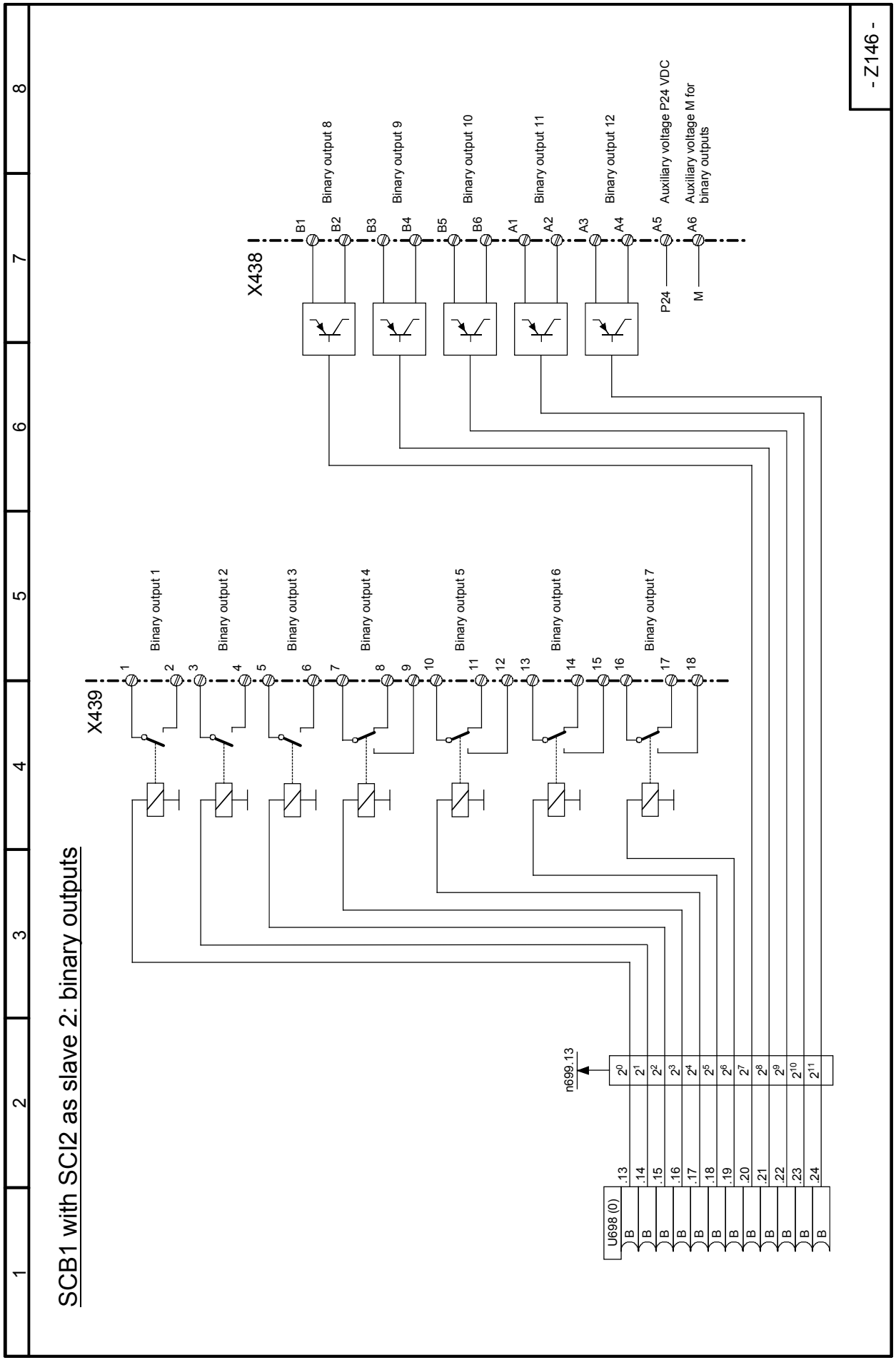

Sheet Z150 SCB1 with SCI1 as slave 1: analog inputs

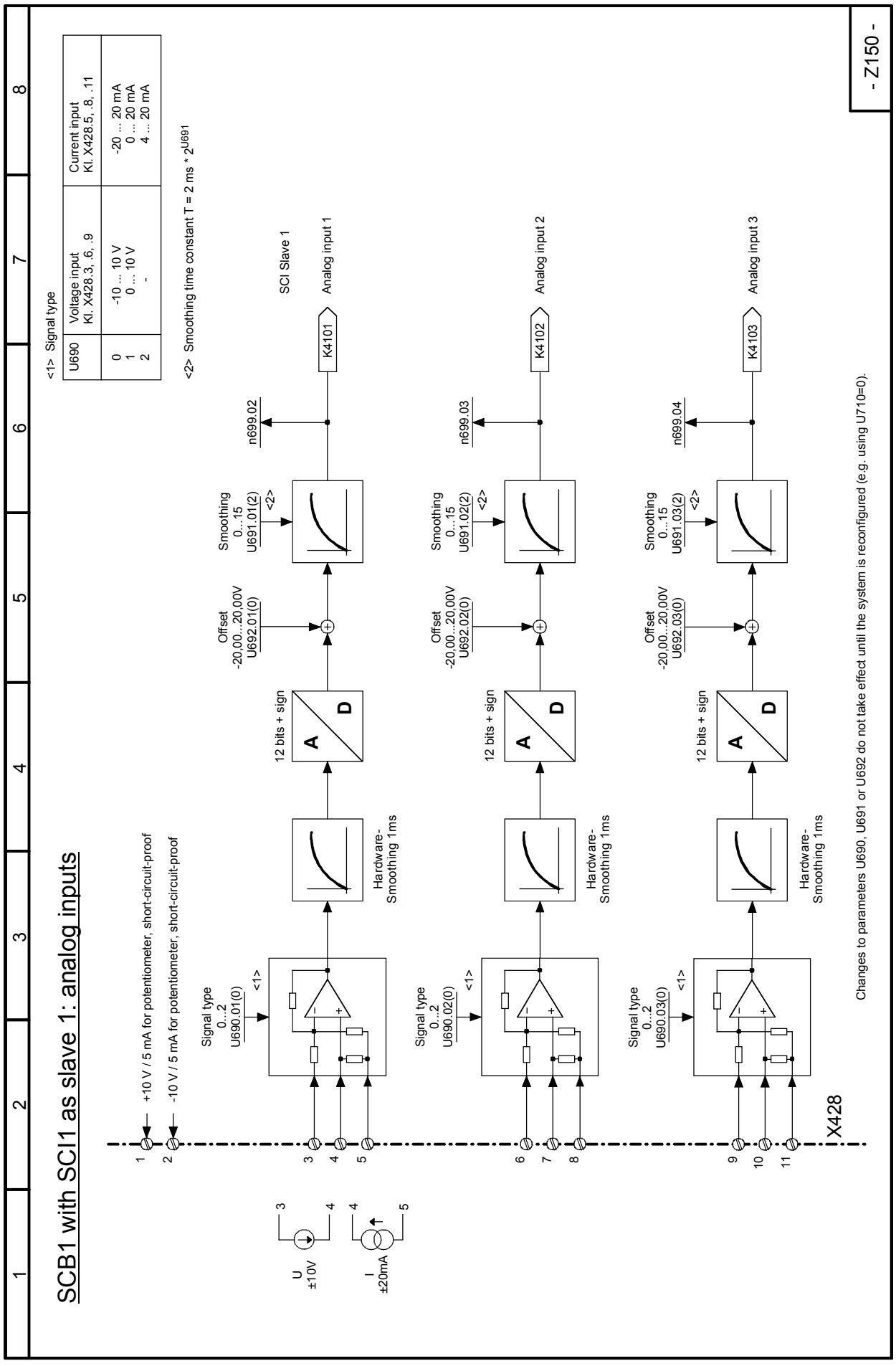

Sheet Z151 SCB1 with SCI1 as slave 2: analog inputs

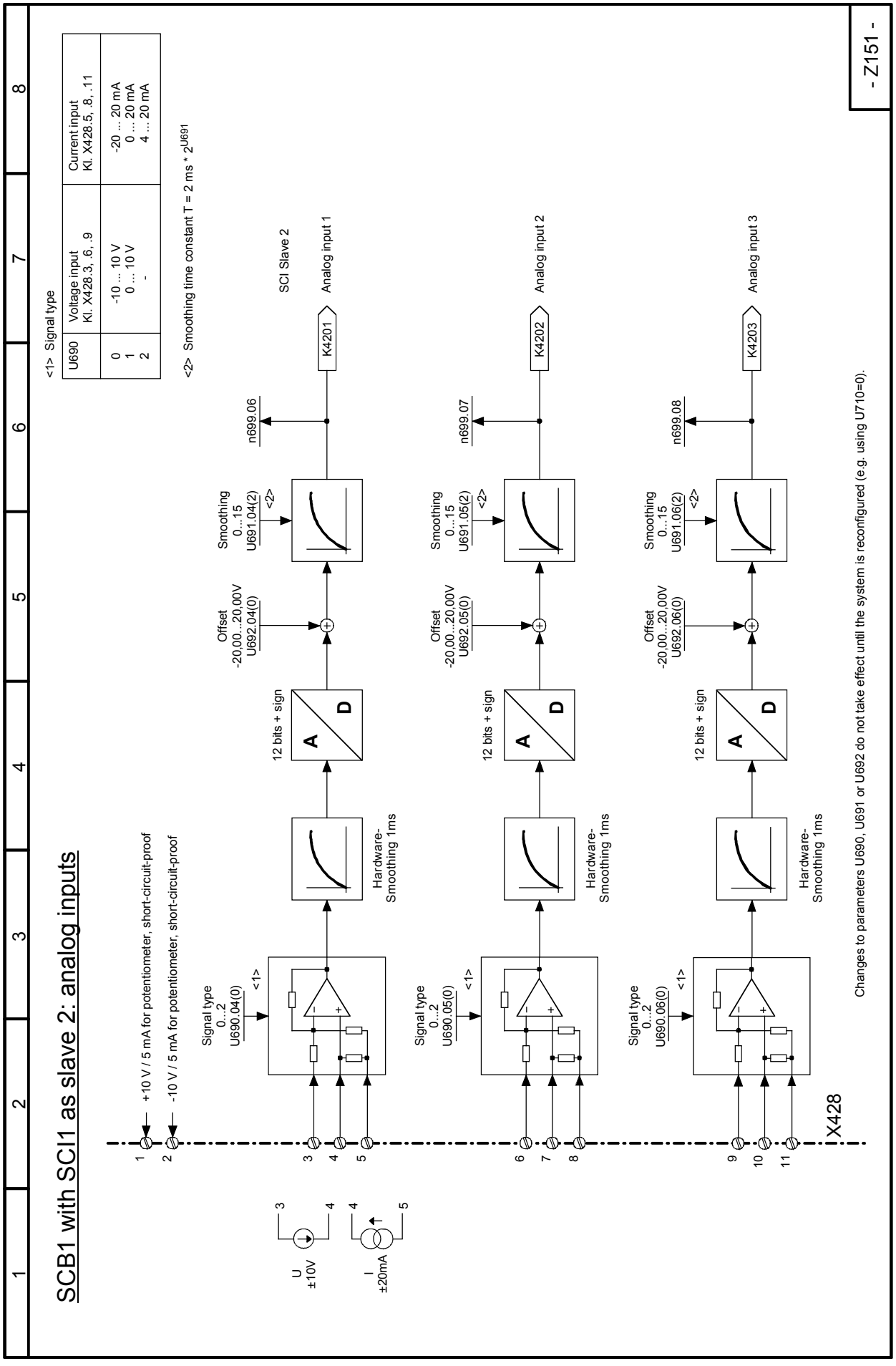

Sheet Z155 SCB1 with SCI1 as slave 1: analog outputs

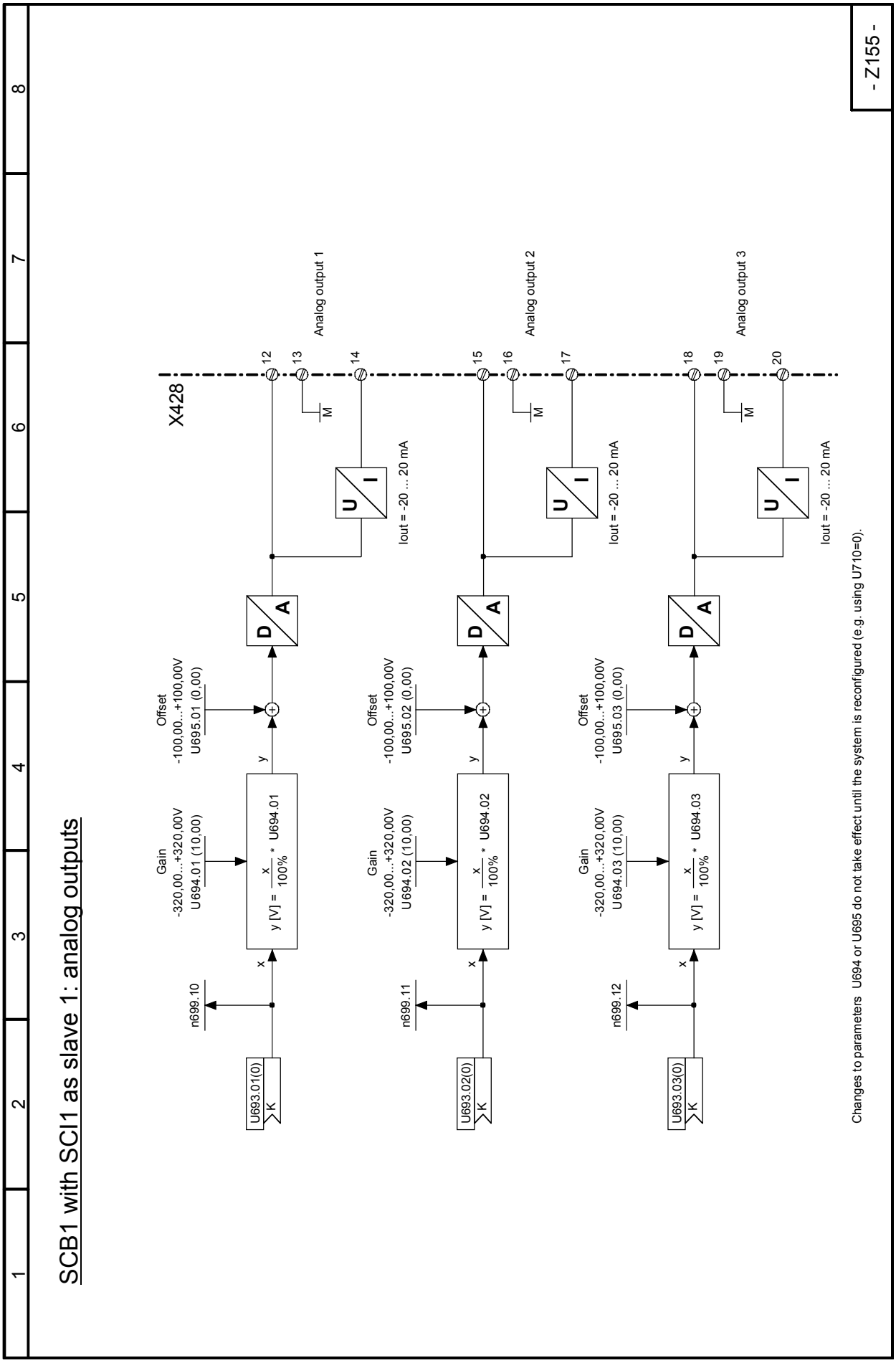

Sheet Z156 SCB1 with SCI1 as slave 2: analog outputs

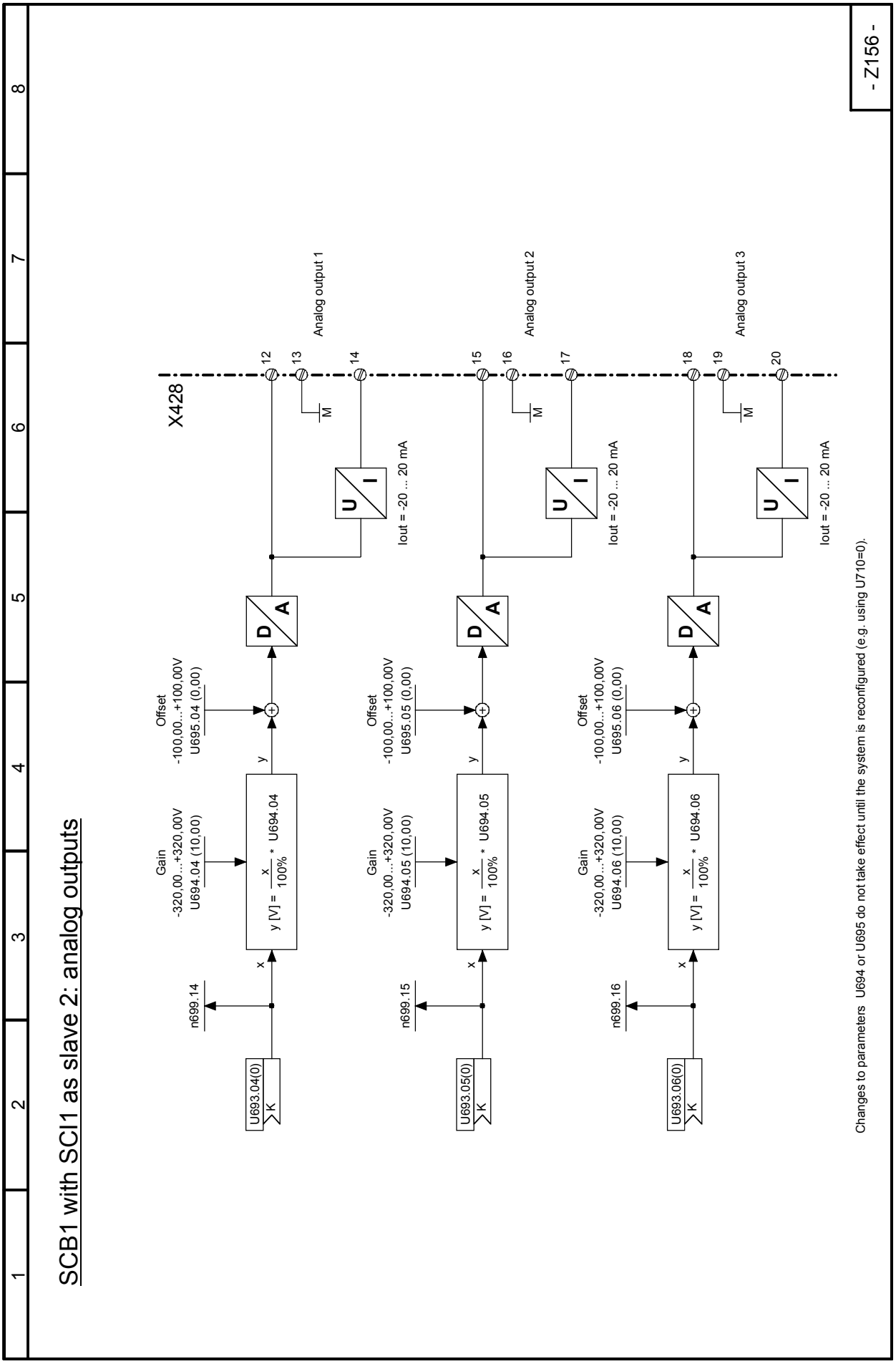

Drive-specific (crane) control, Sheets K1 to K18

see also Section 6.1

The drive-specific (crane) control is made up of the freely-assignable function blocks (S00 technology software, Sheets B100 to B216). In the factory settings for the relevant parameters, these function blocks are connected to the drive-specific (crane) controls.

Explanations

for Sheet K4, control word 1 and Sheet K5, control word 2

The control signals are assigned via the binector/connector and the connector/binector converters. The assignment should not be changed as technology boards are being used. Depending on the "control by PLC" bit (binector B3110), the sources for the two control words are selected automatically.

for Sheet K6, transmit data

Status word 1 is assigned by default to the actual speed value. The signals generated in the internal drive control unit for the technology board and the PLC are transmitted in status word 2.

for Sheet K8, enable, overload lifting gear

The "mechanical stop" signal (emergency stop, centrifugal switch, emergency limit switch) immediately disables the controller and firing pulse. This terminal signal also needs to be connected during operation via the interface in order to switch the converter off if it is no longer reacting to the interface signals.
On lifting gear drives, a measurement device is used to monitor the permissible load to be lifted and to prevent an overload being lifted. If an overload occurs, the status is saved. If the overload is lowered, the master switch will be in the zero position (no travel command) and the brake is closed, the saved overload signal is acknowledged automatically.

for Sheet K9, travel command, electrical stop, overtemperature

The travel command is enabled in direction 1 if the limit switch in this direction is not being approached, or if, in addition, there is no overload for lifting gear.
The travel command is enabled in direction 2 if the limit switch in this direction is not being approached.

Overtemperature in the machine, motor, activation of the fan monitor or a LOW signal on the binary input "electrical stop" (motor fan, thermistor relay protective switches) disables the general travel command. This cancels the speed setpoint, slows the drive electrically and closes the brake. Acknowledgement is only possible once the fault has been eliminated; an alarm message is displayed at the same time

for Sheet K10, brake control

A travel command is issued by activating the master switch, the converter is enabled (enabling of speed control, firing pulse) and the ‘Release brake’ signal is issued. Enabling of the setpoint can be delayed to prevent movement against the brake, which will still be closed for a time. The drive then accelerates to the specified speed setpoint.
If the master switch is returned to the zero position, the drive is delayed and closes the brake with the zero speed signal. The firing pulses are disabled after the delay period for the controller disable has elapsed.

for Sheet K11, enable ramp-function generator, brake

If the drive moves to one of the limit switches, the control logic disables the ramp-function generator. The brake closes at the same time and additional electrical braking is applied because of the delayed controller disable. With the master switch in the zero position (no travel command), disabling of the ramp-function generator is cancelled and movement in the opposite direction (see Sheet K9, travel command) out of the limit switch area is possible again.

If an overload occurs whilst lifting, the control logic disables the ramp-function generator immediately and the brake closes straight away. Because of the delayed shutdown of the controller enable function, electrical braking is also applied and the load is held until the brake is closed This prevents the load dropping during the time it takes for the brake to close.
It will not be possible to lift a load if an overload signal is active (see Sheet K9, travel command). If the master switch is moved to the zero position (no travel command), disabling of the ramp-function generator is cancelled and the load can be lowered with a reduced pre-limit switch speed, lowering is always possible. If there is no overload signal, lifting will be possible again.

for Sheet K12, setpoint processing

The speed setpoint can be specified using the main setpoint analog input (terminals 4/5, ±10V) or via the CBP interface (word 2). A switch causes an automatic switchover to the interface when the "control by PLC" bit is set.
The signal characteriser allows the setpoint to be specified very accurately for low speeds using a linear setpoint potentiometer or a linear interface setpoint. Small deflections of the master switch do not then produce large values (proportional to the deflection angle of the master switch), but much smaller setpoint values.
The maximum value for the controlled speed range can be set using the multiplier.

for Sheet K13, setpoint selection

The "High speed notch" signal causes the speed setpoint to be switched from the variable master switch setpoint (closed-loop speed control range) to the zero delay angle setting. The polarity of the 100% setpoint is controlled using the travel command.
It is possible to switch to a stepped speed input using the selector switch. The travel command for directions 1 and 2 specifies the polarity and the setpoint for the first stage. The other setpoint stages are controlled using three other binary inputs.

for Sheet K14/G135, pre-limit switch, setpoint reduction

The pre-limit switch function means that the limit switch is only approached at low speed. When passing a pre-limit switch in the direction of the limit switch, the machine is switched to the speed setpoint, which is multiplied by a value smaller than one (0.1 = 10%) and therefore limited to this value.
If the pre-limit switch range is left in the opposite direction, the control logic (the travel command passes back over the pre-limit switch that was approached) makes the limit ineffective so maximum speed can be used again.

for Sheet K15, ramp-down monitoring

If the drive is running at maximum speed and the master switch is quickly moved to the zero position, the drive must slow down immediately and the brake close after the specified ramp-down time has elapsed. When a fault occurs, the drive may not follow the travel command setpoint and the brake may not close. In this case, the monitoring time elapses and triggers a fault message and shutdown (time period: ramp-down time + 0.5s)

for Sheet K16, brake monitoring

The drive brake is controlled by the internal brake control system. A brake feedback signal (e.g. brake position limit switch/brake contactor feedback contact) is used to monitor whether or not the brake is also actually following the control signal. The system monitors brake releasing and closing. In the event of a fault, a mechanical stop is carried out by means of the logic, i.e. an instantaneous shut-down is triggered and a fault message is initiated.

for Sheet K17, fault acknowledgement, high-speed step

If the converter is shutdown as the result of a fault signal, the fault can only be acknowledged when the fault is no longer active, the converter is not in Run mode and the master switch is in the zero position (no travel command present).

The master switch signal for open-loop operation only takes effect when the actual speed value has reached the high-speed threshold and as long as the pre-limit switch area has not been entered. High-speed mode becomes active again on moving away from the pre-limit switch area.

for Sheet K18, limit-value monitor

Two limit-value monitors output a control signal depending on the current direction of rotation and speed. If the speed exceeds a threshold value, the flag bit is set to zero. A safety circuit can be implemented in an external control unit in connection with pre-limit monitoring limit switches.

A limit-value monitor issues the signal for switching over the ramp-up times used in the open-loop and closed-loop ranges.

for Sheet G150, start pulse, speed controller

The speed controller starts from a defined value, not 0. With lifting gear, this prevents the load dropping as the movement starts.
A lower start pulse can be used if starting off in a lowering direction.

Sheet K1 Binary inputs, terminals 36 to 39

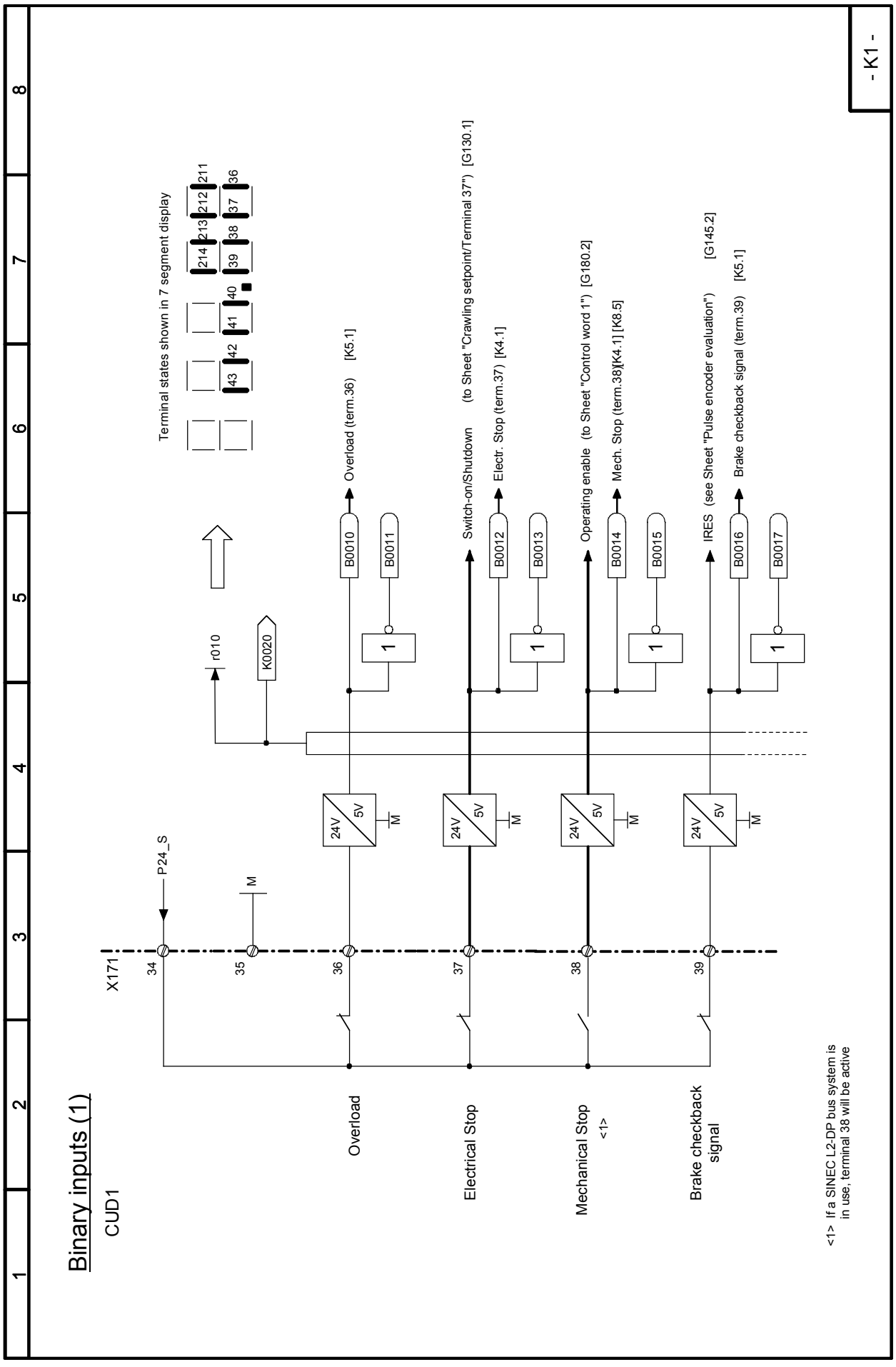

Sheet K2 Control inputs, terminals 71 to 75

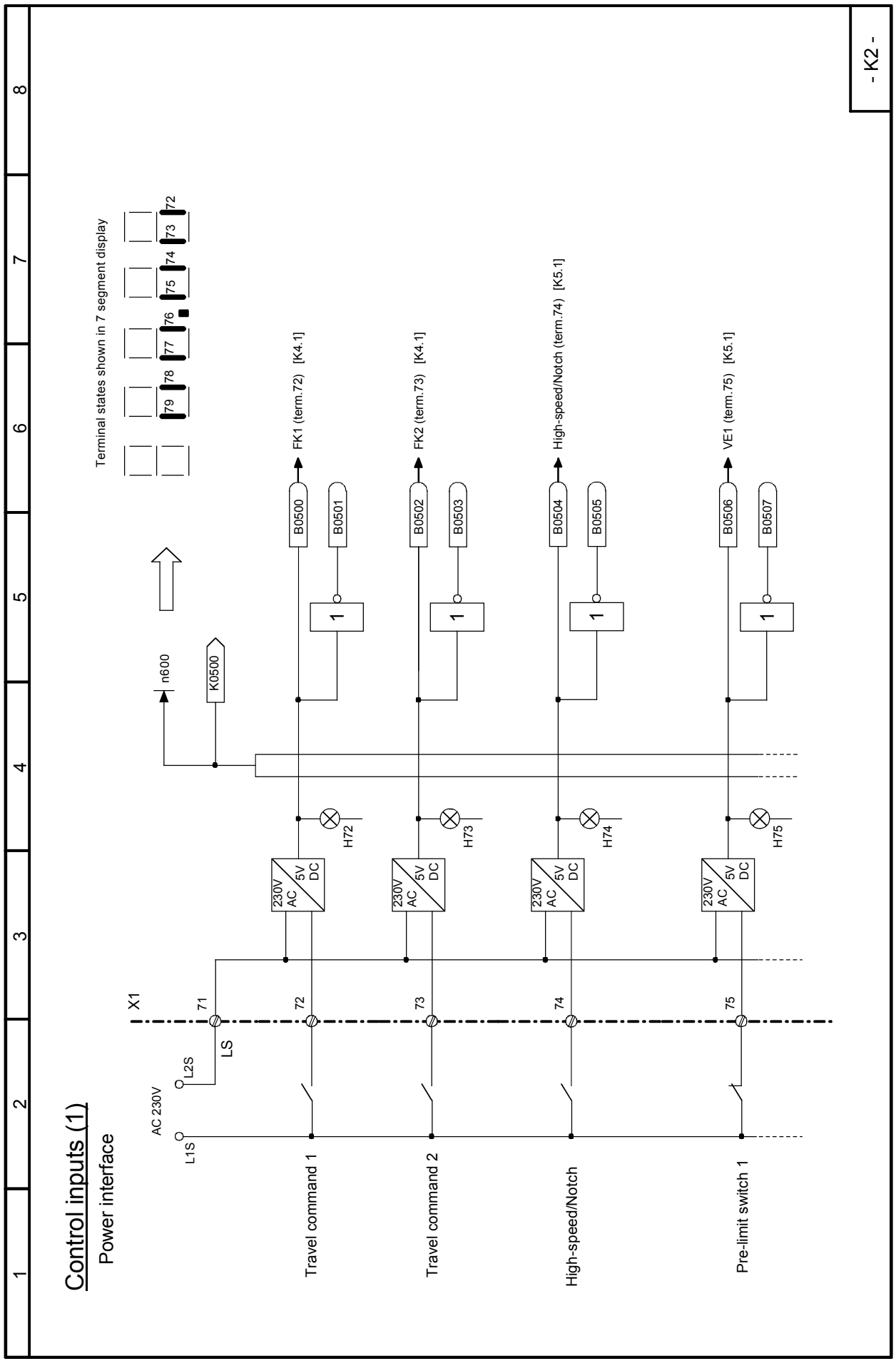

Sheet K3 Control inputs, terminals 76 to 79

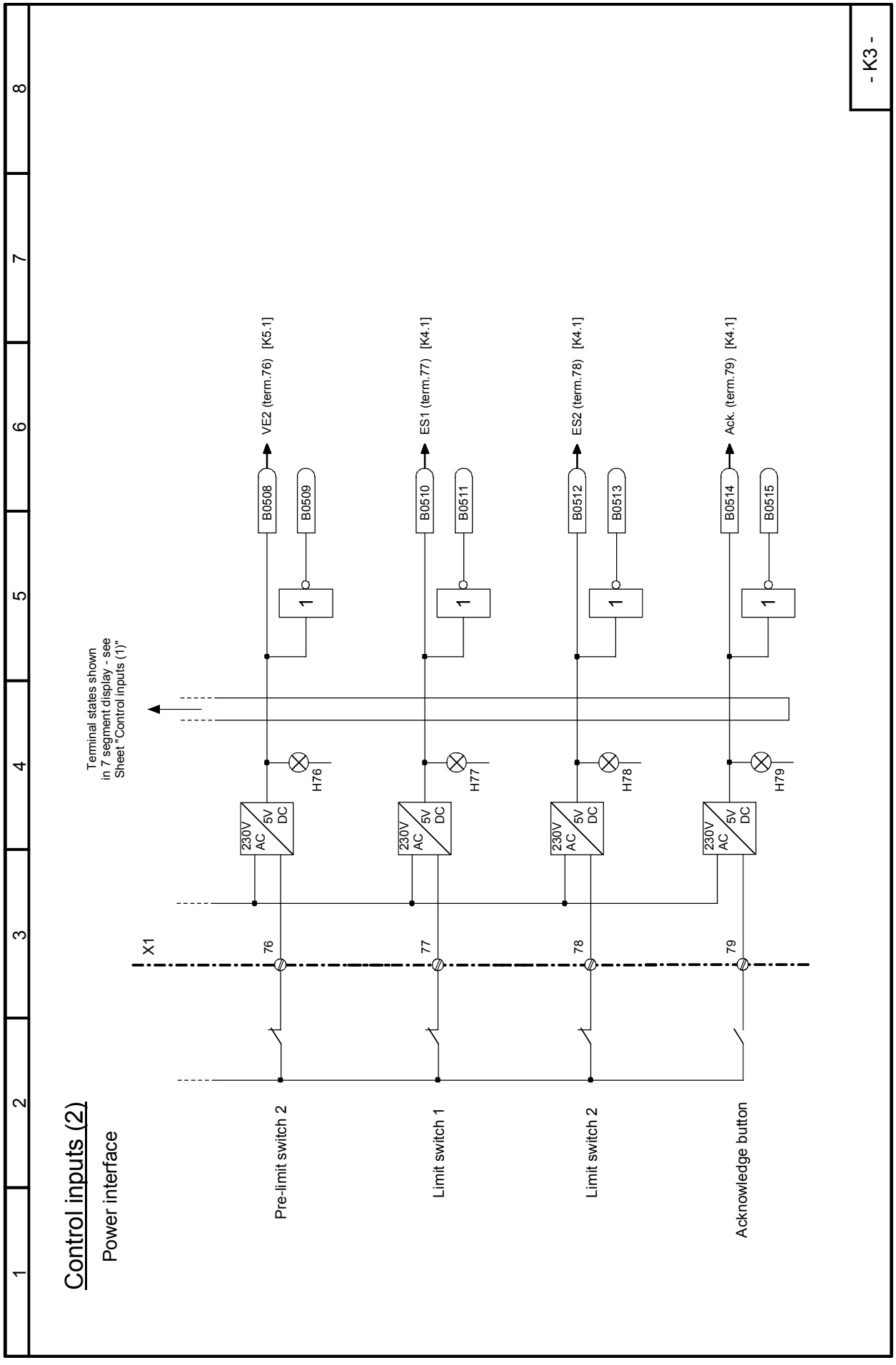

Sheet K4 Control word 1

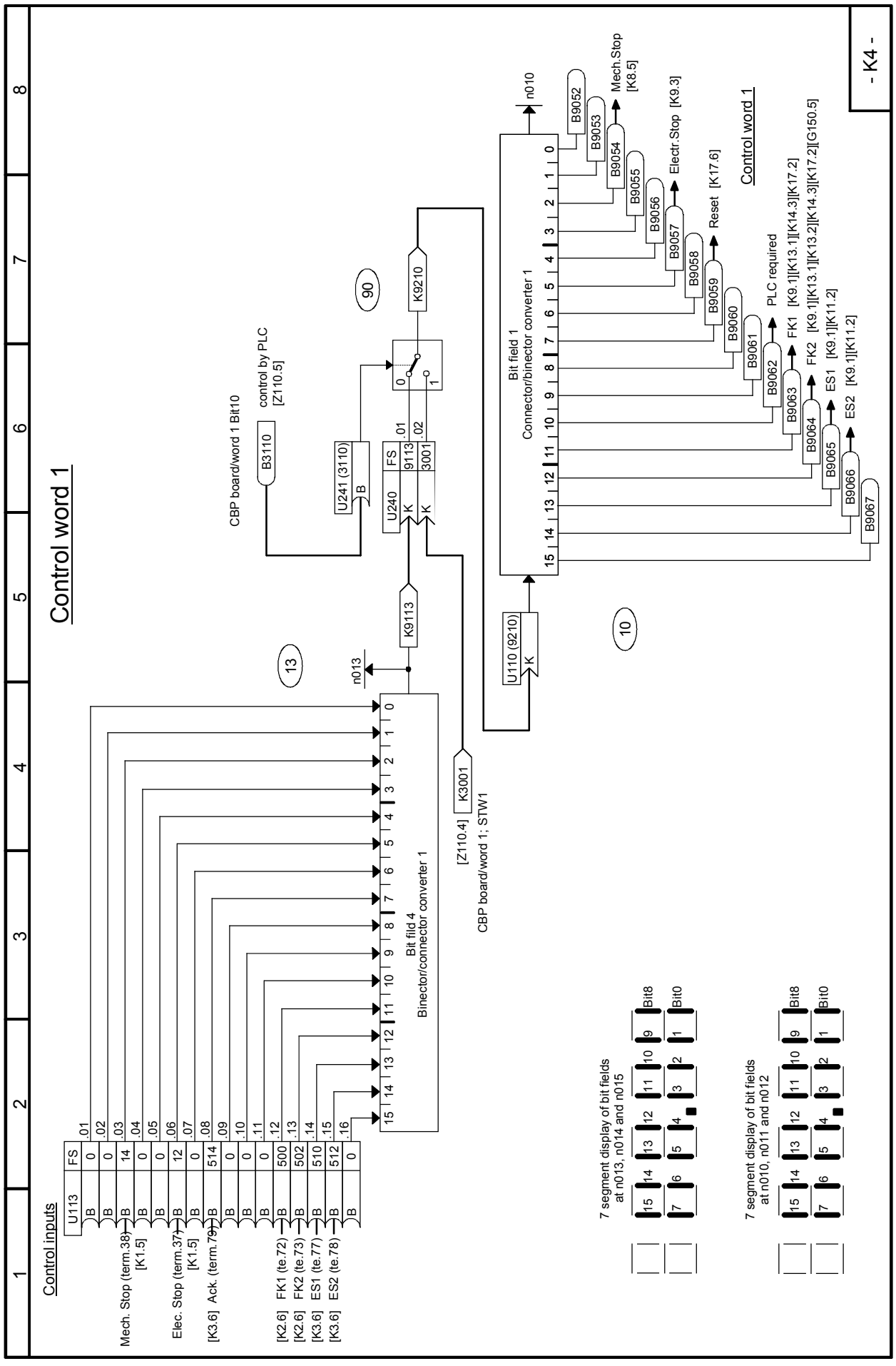

Sheet K5 Control word 2

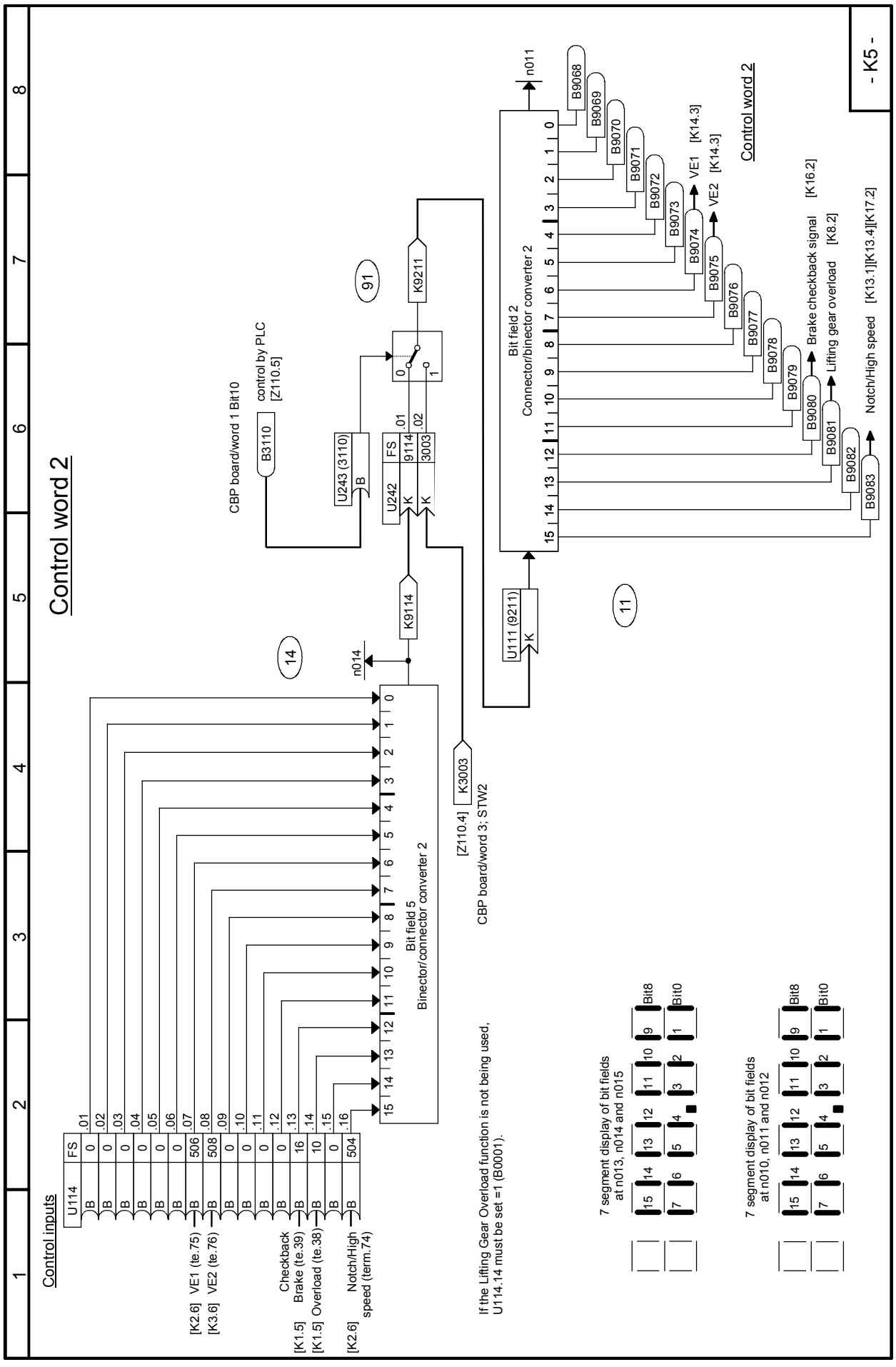

Sheet K6 Transmit data

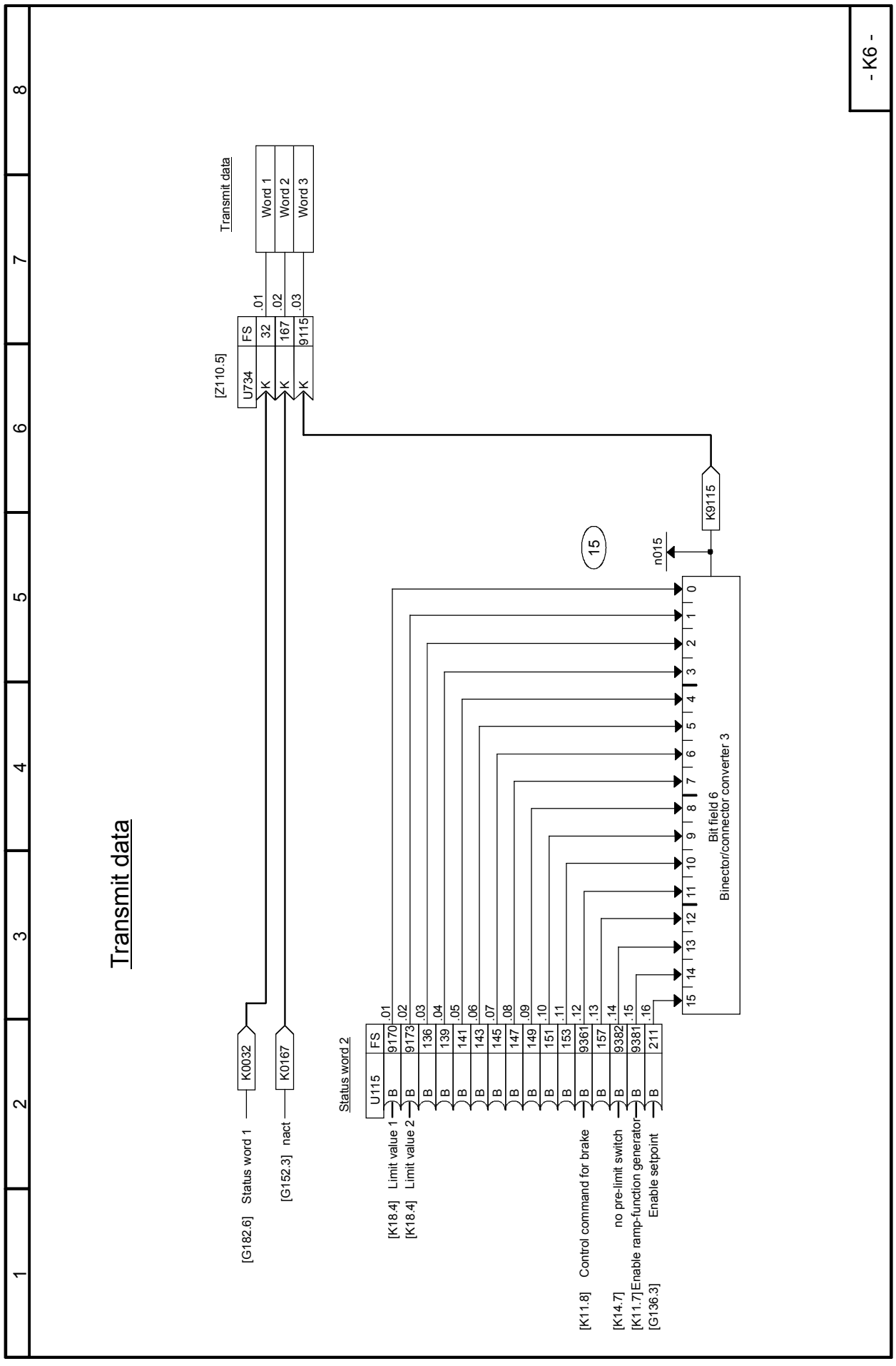

Sheet K7 Control outputs

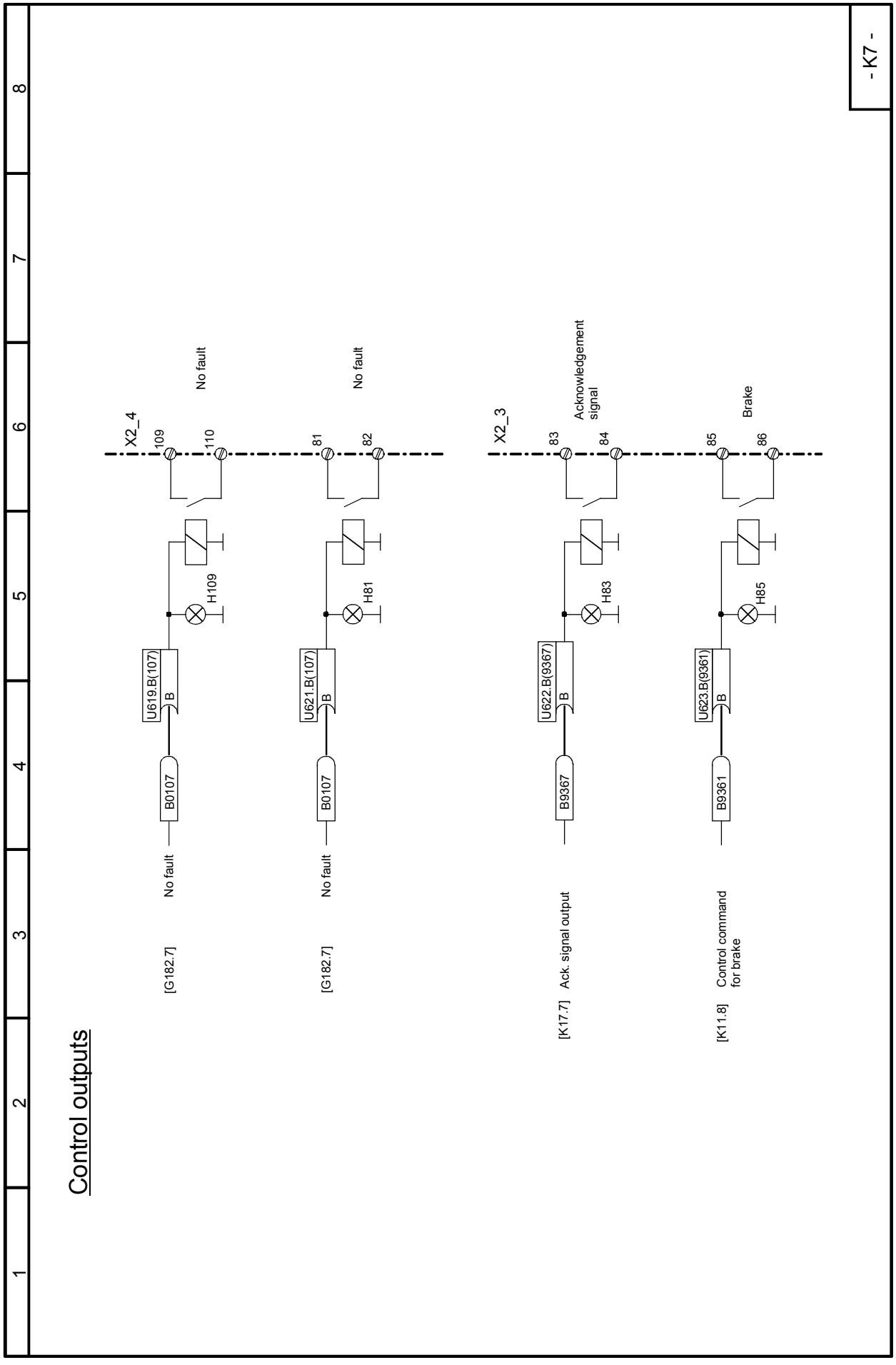

Sheet K8 Enable, lifting gear overload

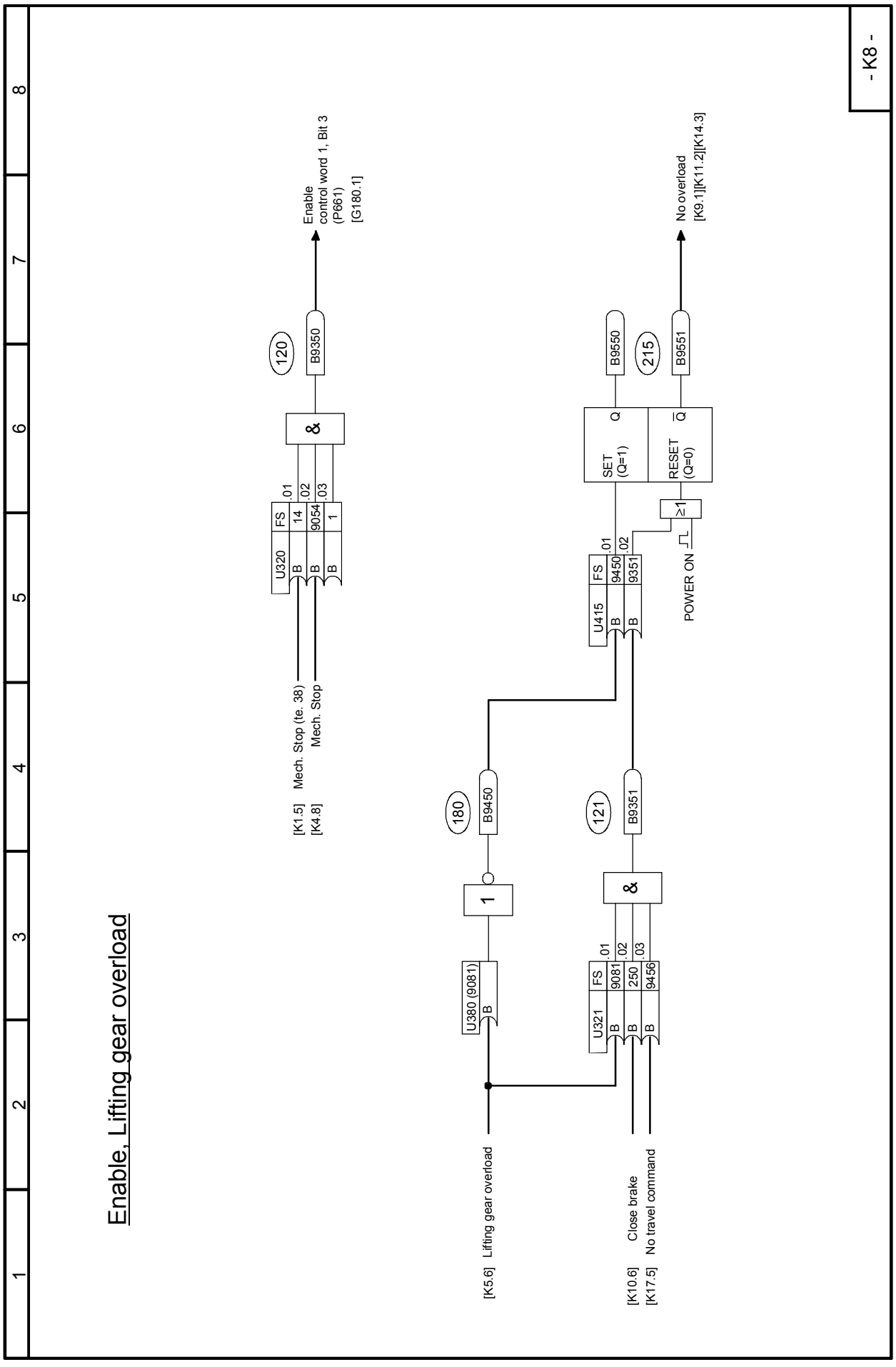

Sheet K9 Travel command, electrical stop, overtemperature

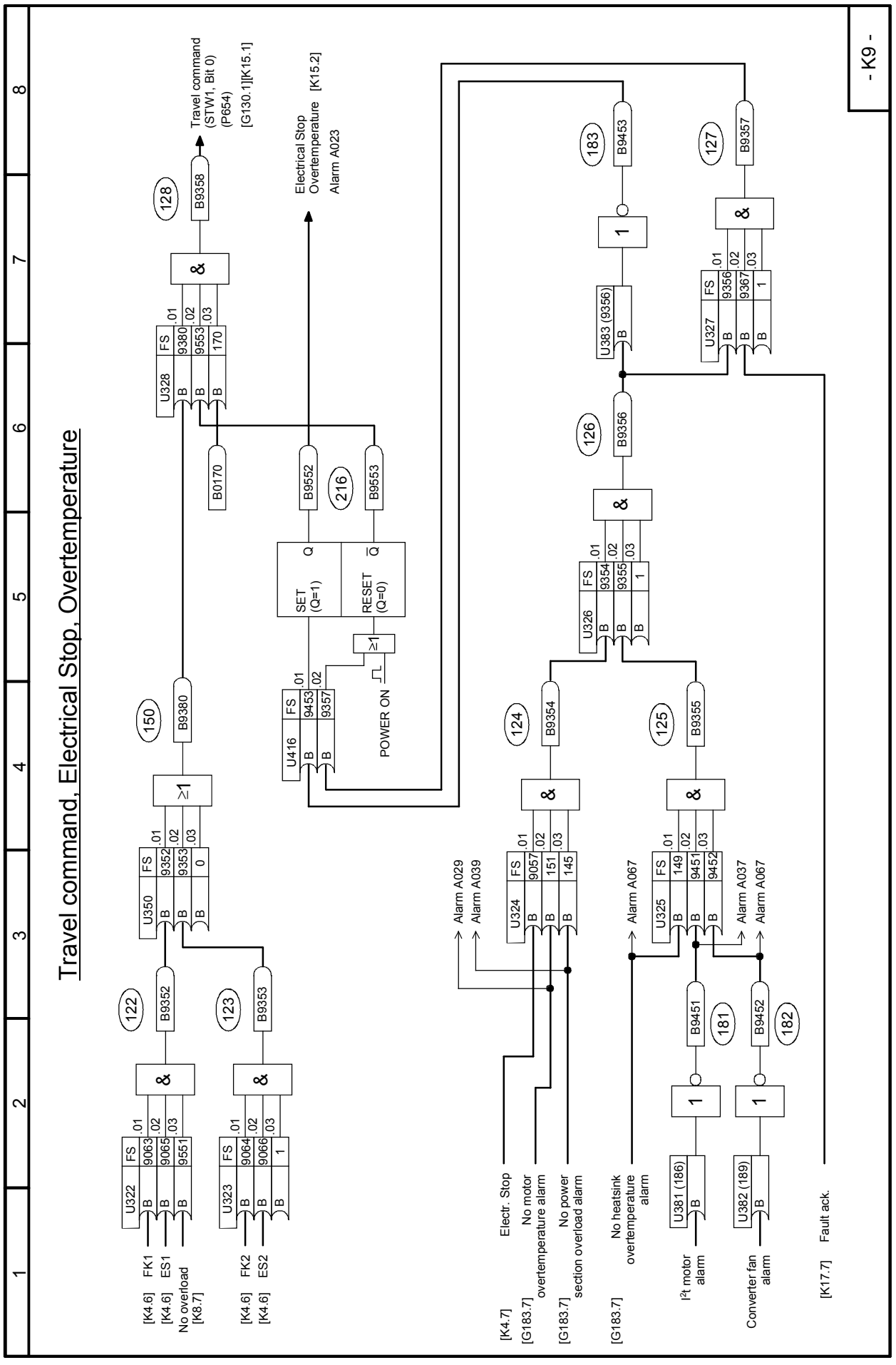

Sheet K10 Brake control

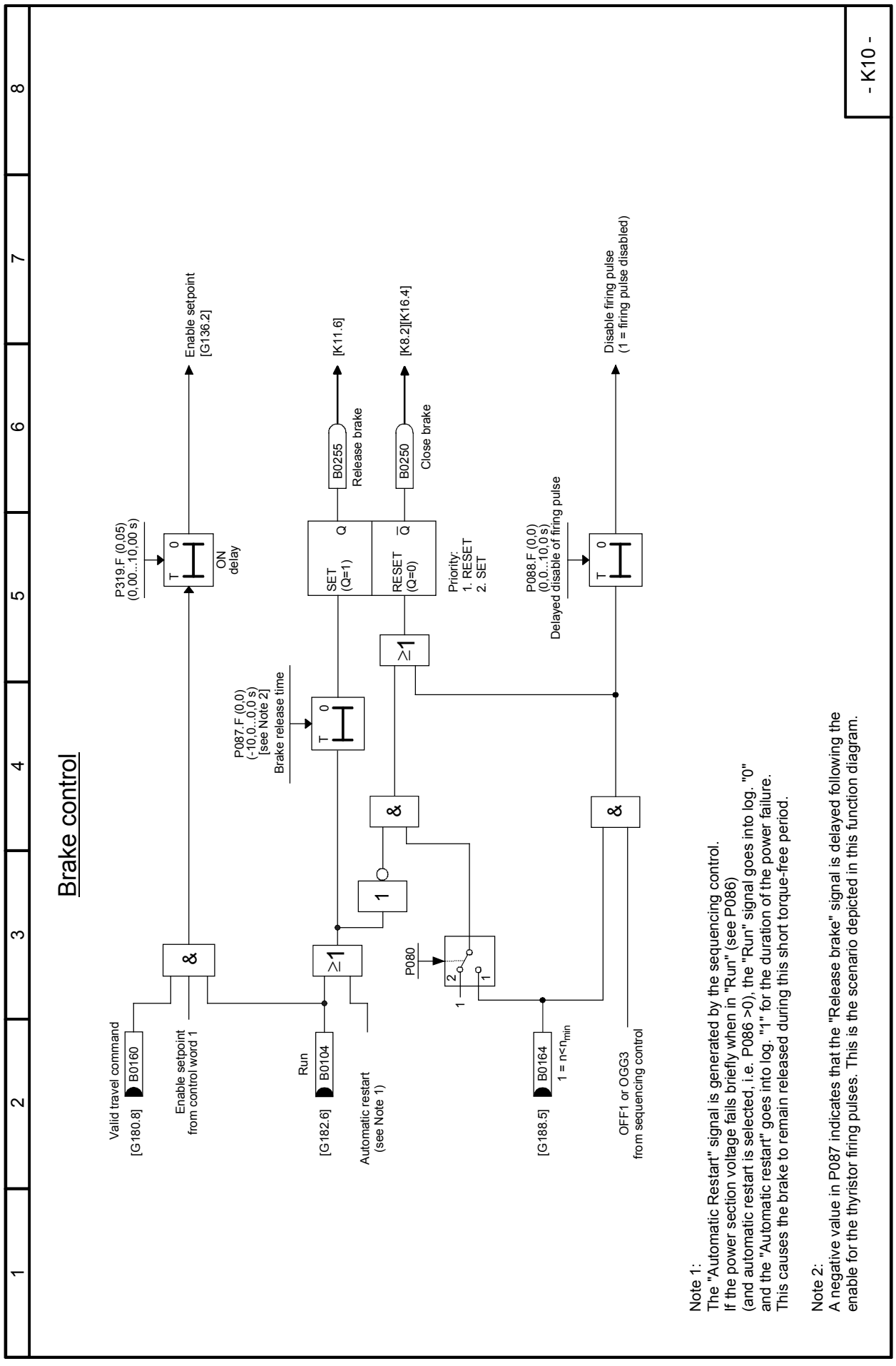

Sheet K11 Enable brake, enable ramp-function generator, starting aid limit switch

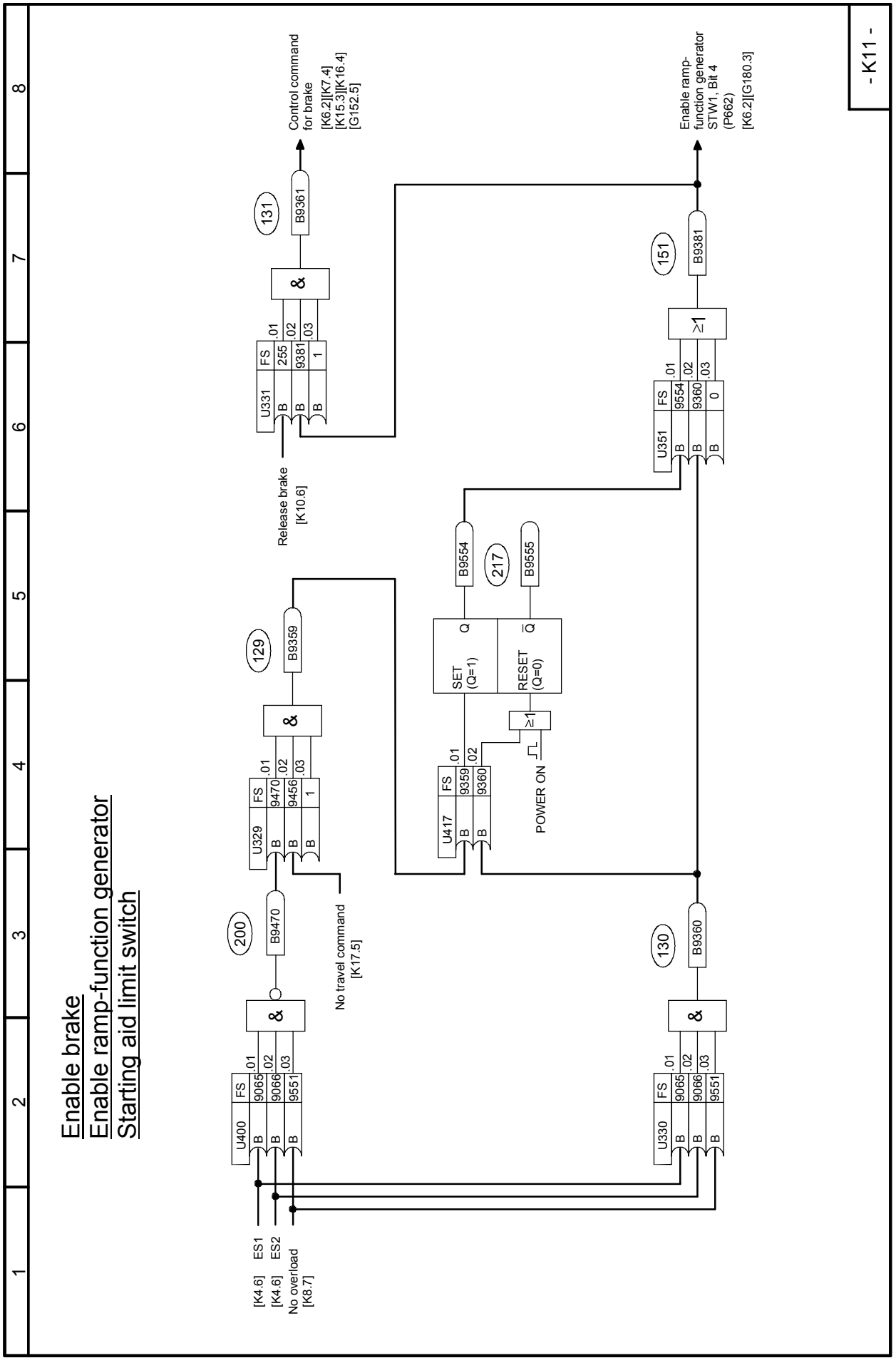

Sheet K12 Setpoint processing

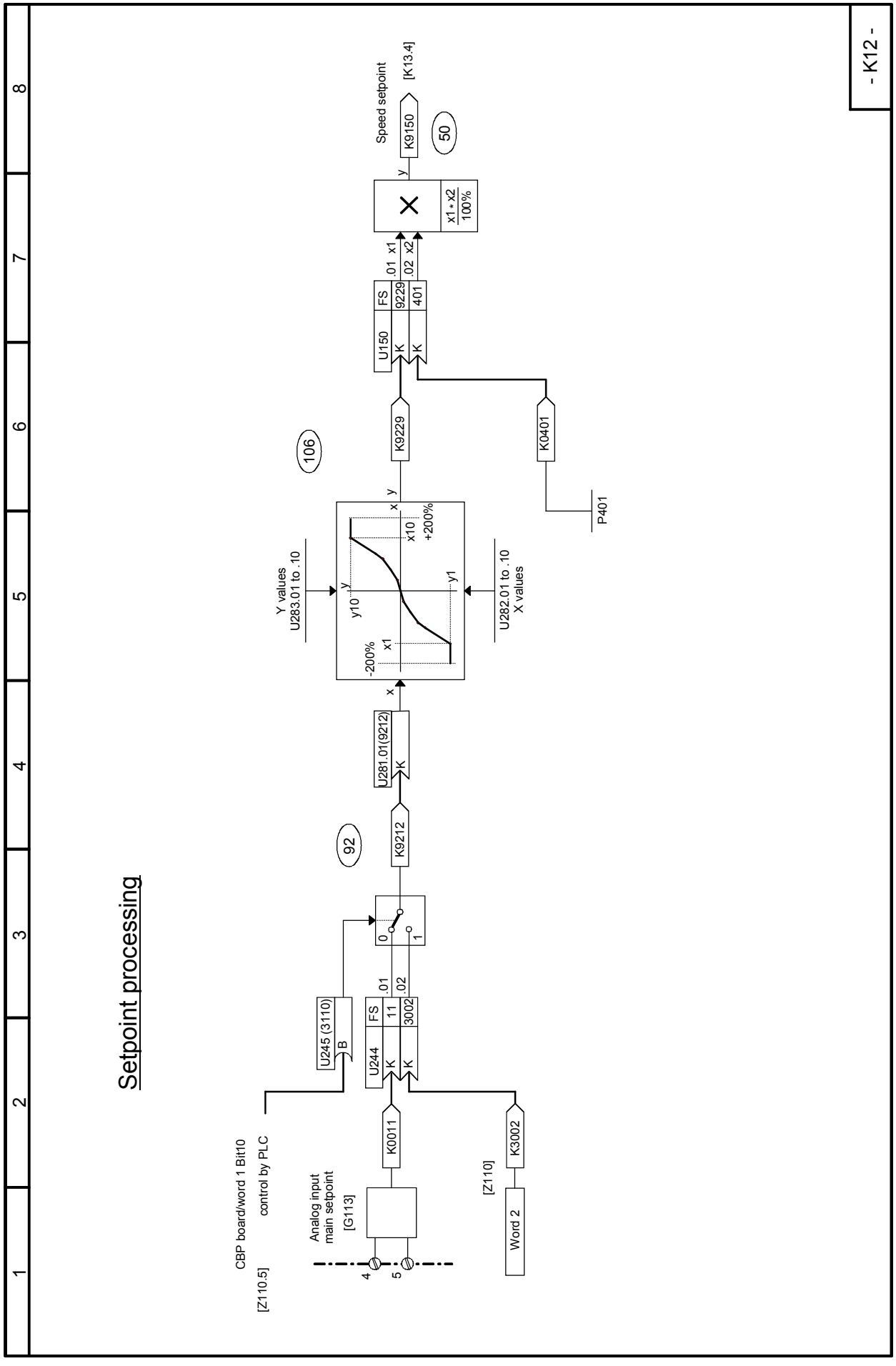

Sheet K13 Setpoint selection

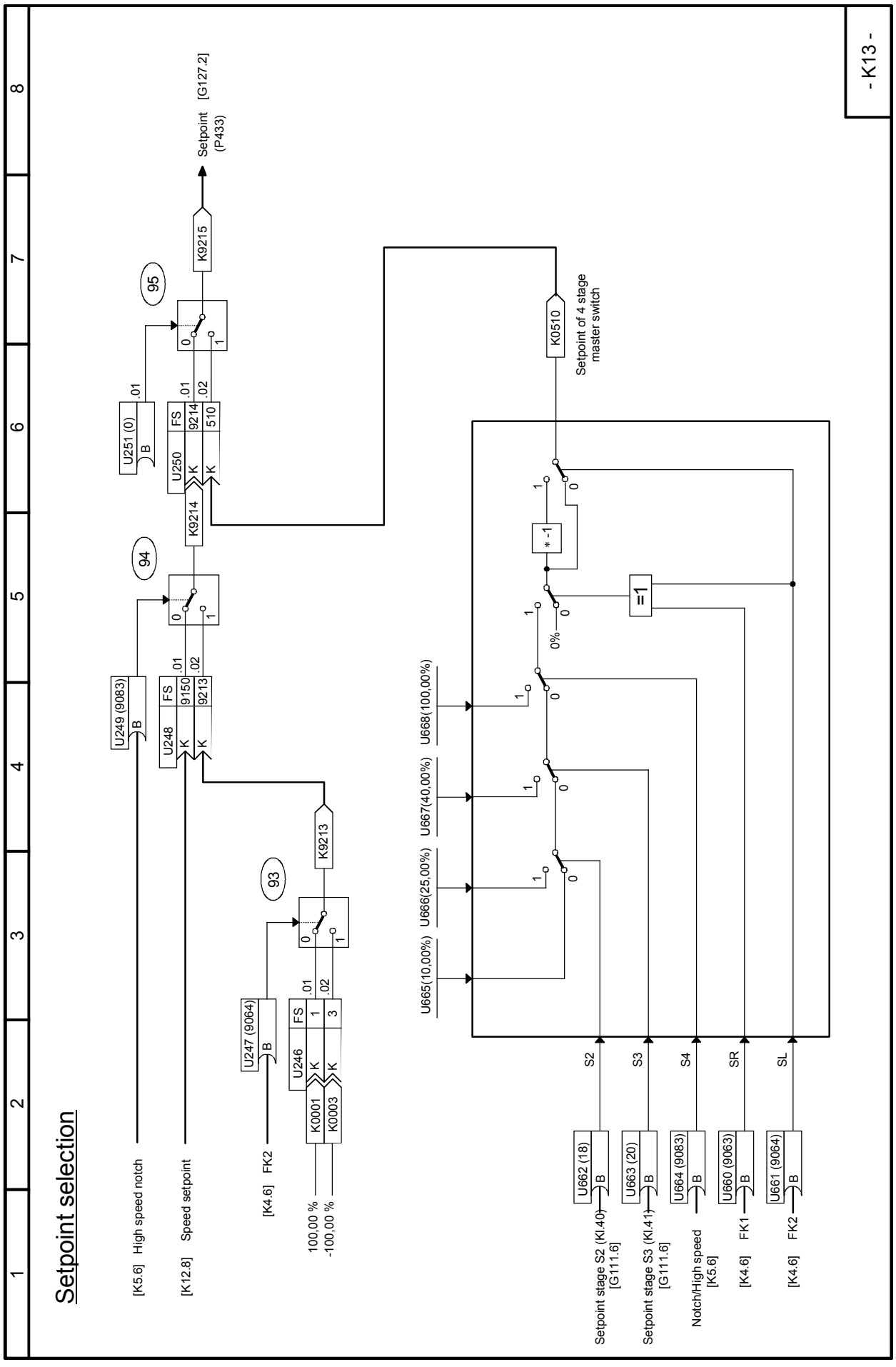

Sheet K14 Setpoint reduction on reaching a pre-limit switch

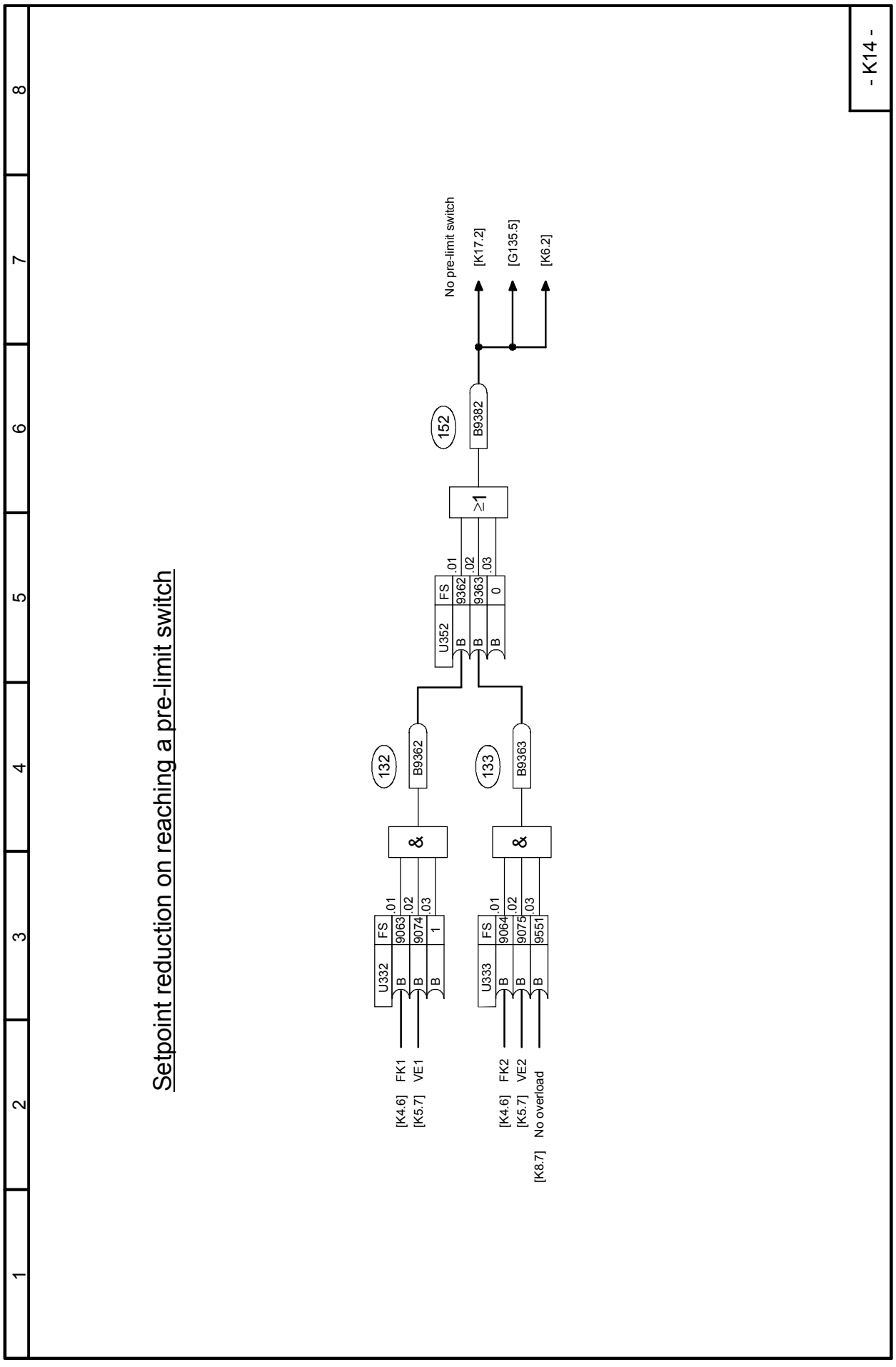

Sheet K15 Ramp-down monitoring

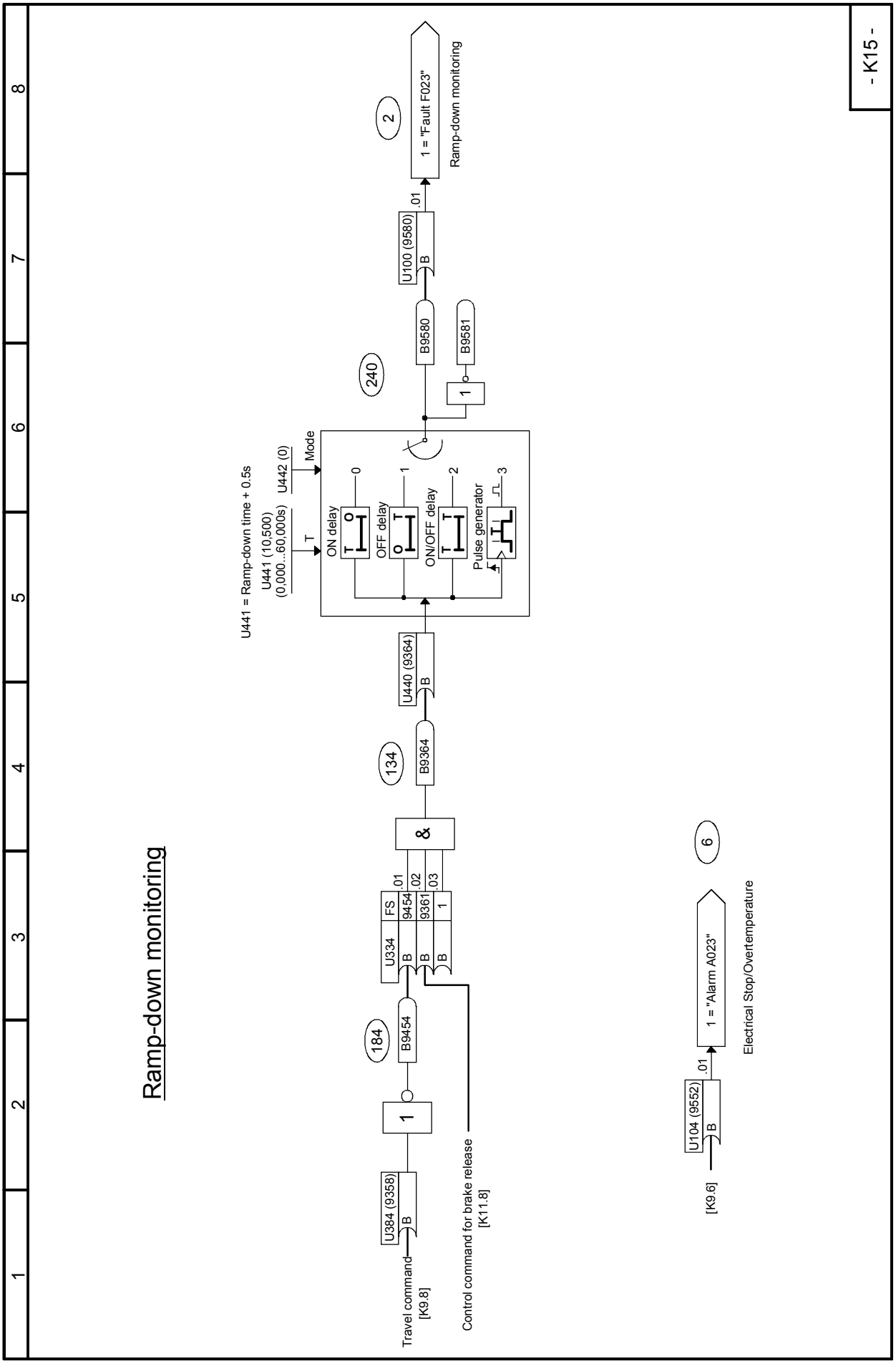

Sheet K16 Brake monitoring

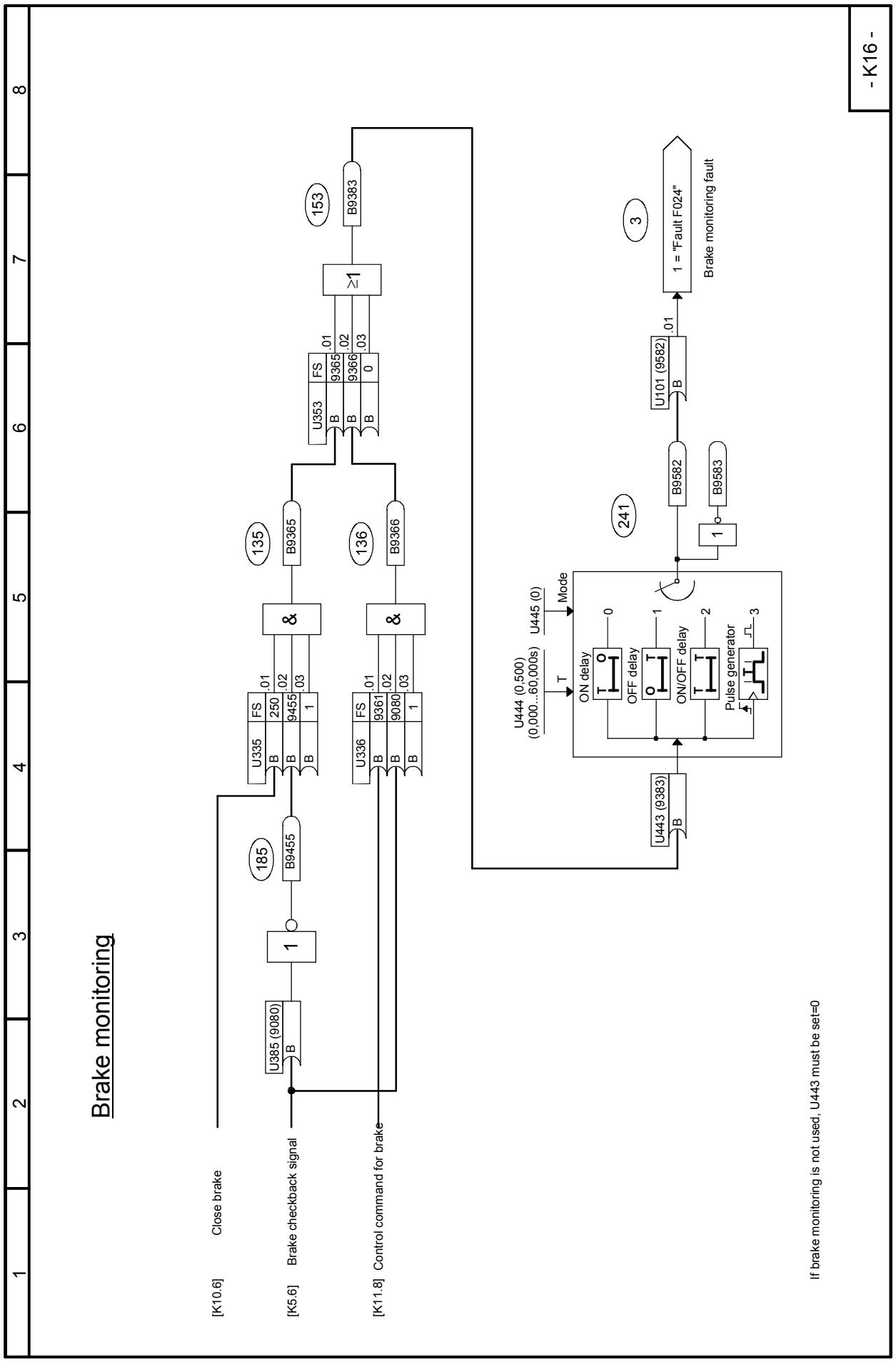

Sheet K17 Fault acknowledgement, high-speed step

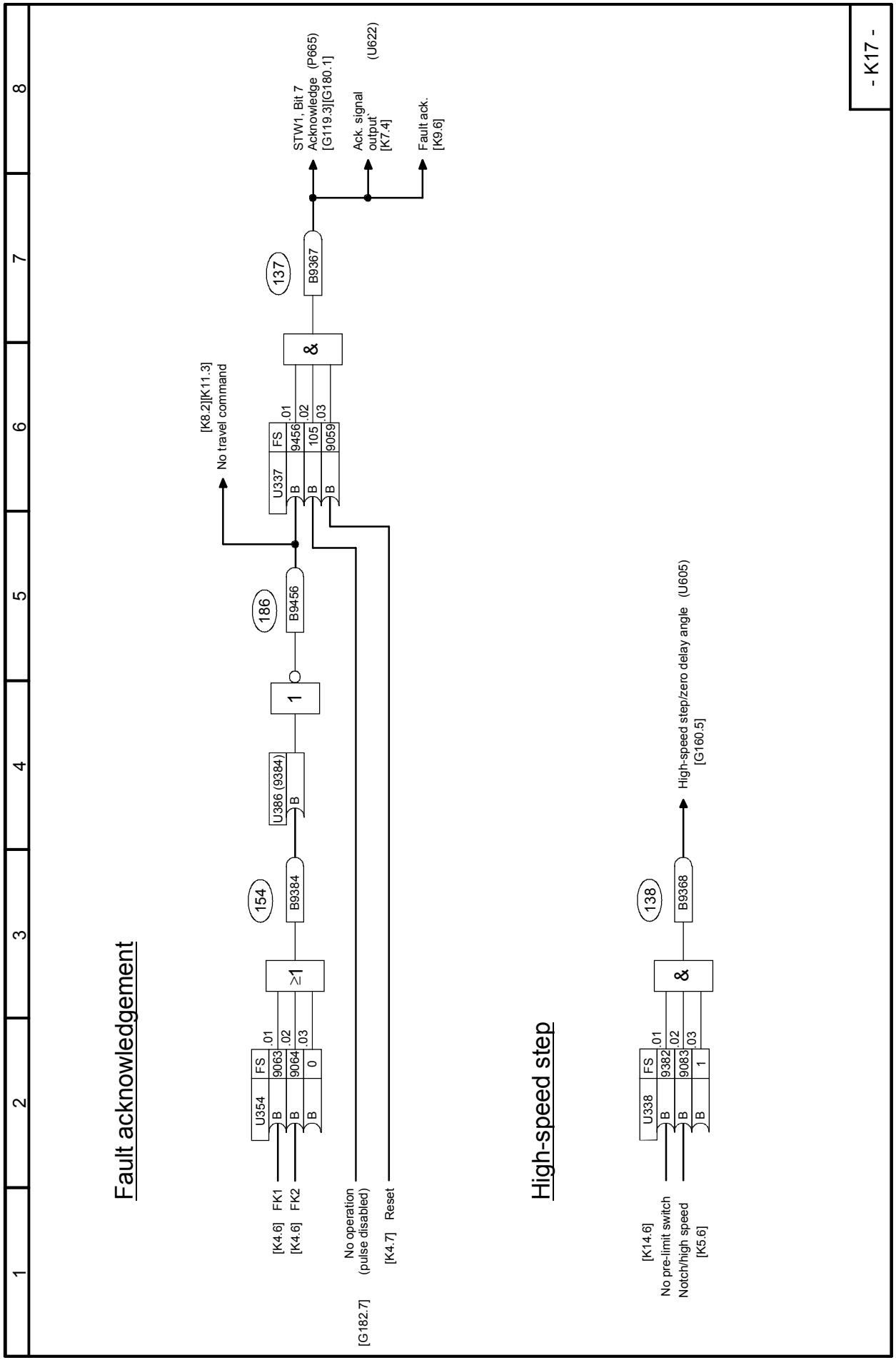

Sheet K18 Limit-value monitor

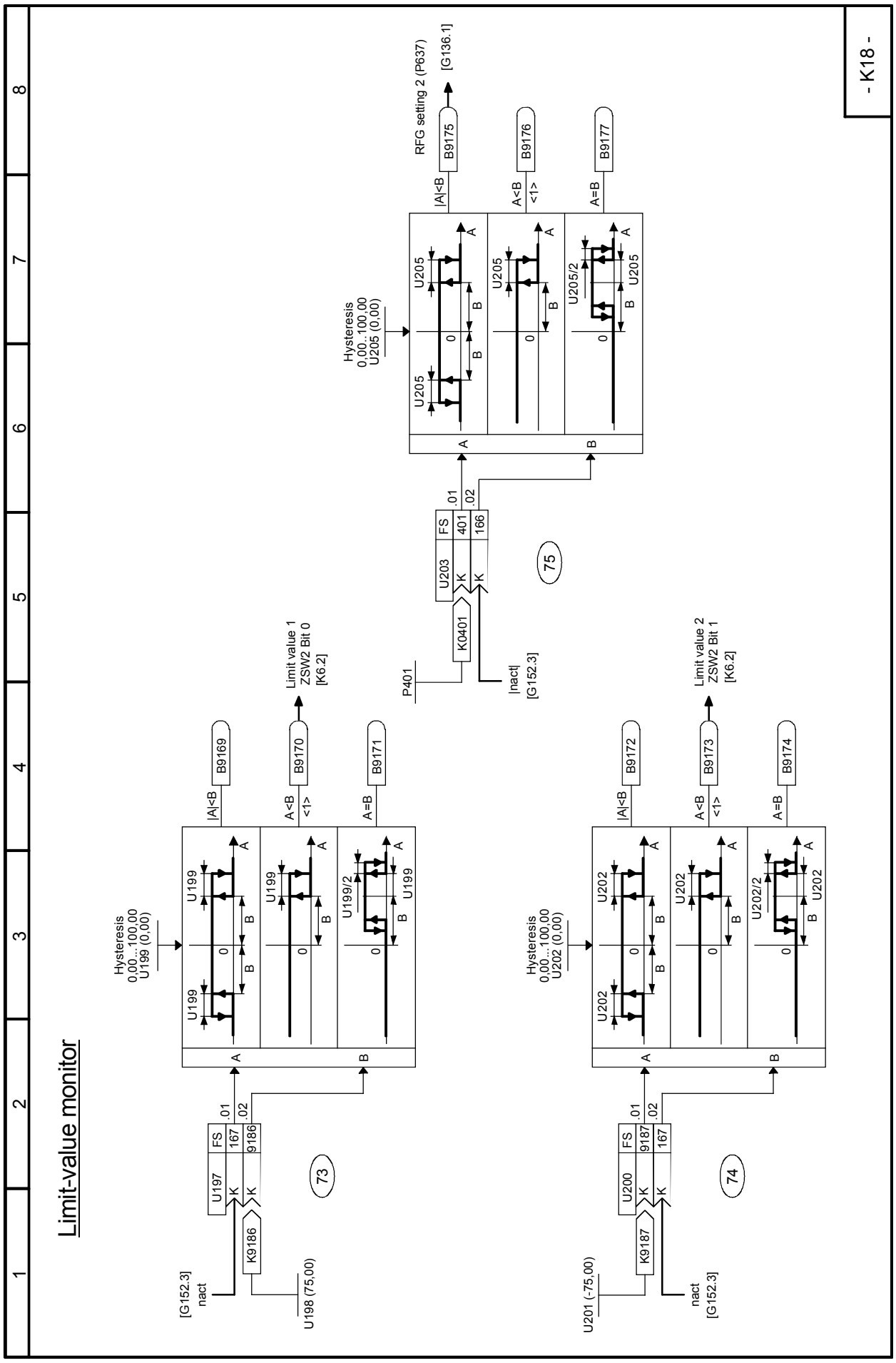

9 Function descriptions

NOTE

The converter functions available can be found in the function diagrams (block diagrams) in Section 8.
Section 9 is not intended to be a complete description of these functions, but is aimed at explaining in more detail individual features which could not be shown graphically in sufficient detail in the figures, and to explain their applications using examples.

9.1 General explanations of terms and functionality

Function blocks

Although the illustrated function blocks have been implemented in digital form (as software modules), the function diagrams can be "read" in a similar way to the circuit diagrams of analog equipment.

Configurability

The converter is characterized by the optional configurability of the function blocks provided. "Optional configurability" means that the connections between individual function blocks can be selected by means of parameters.

Connectors

All output variables and important computation quantities within the function blocks are available in the form of "connectors" (e.g. for further processing as input signals to other function blocks). The quantities accessed via connectors correspond to output signals or measuring points in an analog circuit and are identified by their "connector number" (e.g. K0003 = connector 3).

Special cases: K0000 to K0008 are fixed values with signal levels corresponding to 0, 100, 200, -100, -200, 50, 150, -50 and -150%.
K0009 is assigned to different signal quantities. Which signal quantity it actually refers to is dependent on the selector switch (parameter) at which connector number 9 is set. A description can be found under the relevant parameter number in the Parameter List. If the Parameter List or block diagram does not contain any reference to a special function in relation to selection of connector K0009, then the selector switch (parameter) concerned must not be set to "9".

The internal numerical representation of connectors in the software is generally as follows:
100% corresponds to 4000 hexadecimal = 16384 decimal. The resolution is 0.006% (step change).

Connectors have a value range of -200% to +199.99%.
For a list of available connectors, please refer to Section 12.

Example: The data received via peer-to-peer 2 are available at connectors K6001 to K6005 (Section 8, Sheet G173)

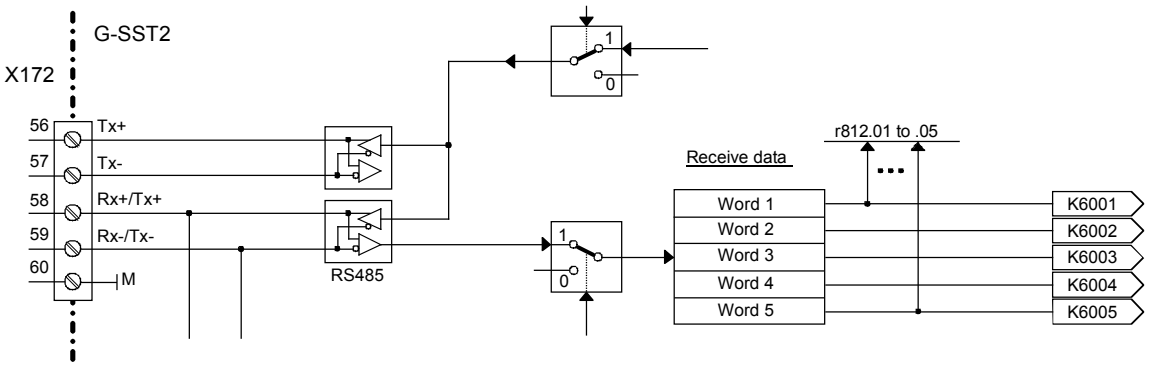

Double-word connectors (SW 1.9 and later)

Double-word connectors are connectors with a 32-bit value range (i.e. LOW word and HIGH word with a double-word value range of 00000000Hex to FFFFFFFFHex).

-100 % to +100 % corresponds to connector values of C0000000 Hex to 40000000 Hex (= -1073741824 to +1073741824 decimal). This means that the value range in the upper 16 bits (HIGH word) of a double-word connector is the same as for a "normal" connector (C000 Hex to 4000 Hex or -16384 to +16384 decimal for -100 % to +100 %). The extra 16 bits in the LOW word as compared to a "normal connector" afford, therefore, an improved resolution of the connector value by a factor of 65536. For information about how to use double-word connectors see also the section in "The following rules apply to the selection of double-word connectors" below.

Double-word connector symbol in function diagrams:

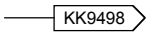

Binectors

All binary output quantities and important binary output signals of the function blocks are available as "Binectors" (connectors for binary signals). Binectors can assume states log. "0" and log."1". The quantities accessed via binectors correspond to output signals or measuring points in a digital circuit and are identified by their "Binector number" (e. g. B0003 = binector 3).

Special cases: B0000 = Fixed value log."0"
B0001 = Fixed value log."1"

A list of available binectors can be found in Section 12.

Example: The status of terminal 36 is available at B0010 and, in inverted form, at binector B0011 (Section 8, Sheet G110)

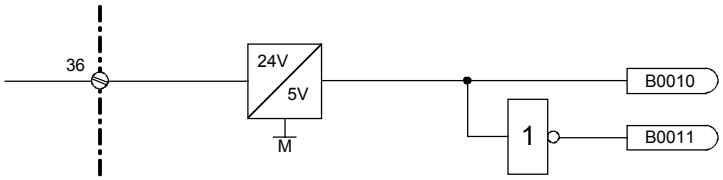

Selection switches, connections
(see also Section "Data sets")

The inputs of function blocks are defined at "selection switches" by setting the appropriate selection parameters. The input is defined by entering the number of the connector or binector to be applied as the input quantity in the parameter for the relevant selection switch.

Representation in function diagrams (examples):

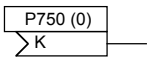

Selection of a connector
Parameter number = P750, factory setting = 0 (i. e. fixed value 0%)

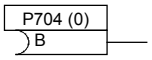

Selection of a binector
Parameter number = P704, factory setting = 0 (i. e. fixed value 0)

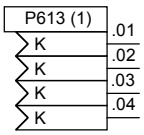

Selection of connectors ("indexed" parameter with 4 indices)
Parameter number = P613, factory setting = 1 (i. e. fixed value 100%; this factory setting applies to all the indices of P613)

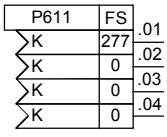

Selection of connectors ("indexed" parameter with 4 indices)
Parameter number = P611
Factory setting for index .01 = 277 (i. e. connection with connector K0277)
Factory setting for indices .02 to .04 = 0 (i. e. fixed value 0%)

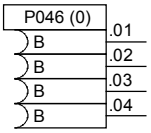

Selection of binectors ("indexed" parameter with 4 indices)
Parameter number = P046, factory setting = 0 (i. e. fixed value 0, this factory setting applies to all the indices of P046)

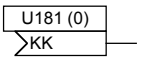

Selection of a double-word connector (SW 1.9 and later)
Parameter number = U181, factory setting = 0 (i.e. fixed value 0%)

The selected setting can be entered in the empty field (fields). The value in brackets next to the parameter number is the factory setting of the selection parameter.

The following rules apply to the selection of double-word connectors (SW 1.9 and later):

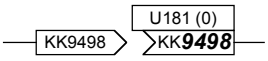

Double-word connector to double-word connector selection:

The double word for subsequent processing comprises:
LOW word = LOW word of double-word connector (KK9498)
HIGH word = HIGH word of double-word connector (KK9498)

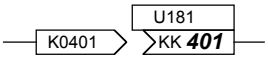

Connector to double-word connector selection:

The double word for subsequent processing comprises:
LOW word = 0
HIGH word = selected connector (K0401)

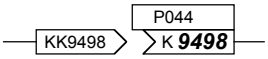

Double-word connector to connector selection:

HIGH word of the double-word connector (KK9498) is connected to another block,
the LOW word of the double-word connector (KK9498) is not used

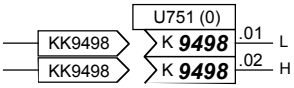

There are exceptions in the selection of transmission data for the serial interfaces and in the transmission of optional expansion modules (technology and communications modules, SIMOLINK module):
If the same double-word connector is entered in two contiguous indices of the selection parameter, the entire value (the LOW and HIGH word) will be used.

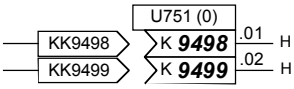

If different double-word connectors are entered in two contiguous indices of the selection parameter, in both cases only the HIGH word of the two double-word connectors will be used.

Examples: Some examples of how to handle connectors and binectors are given below.

Example 1: As a function of the status of terminal 36 (B0010 - see Section 8, Sheet G110), analog selectable input 1 (terminals 6 and 7) must be made available, either with the correct sign or inverted sign, at the function block output (= connector K0015).
This output value must then be injected as an additional setpoint and output simultaneously at analog output terminal 14.

The following settings need to be made to create the correct links:

1. P714 = 10: Selects binector B0010 (status of terminal 36) as the control signal for sign reversal. The setting for parameter P716 remains on 1 (= fixed value 1, as supplied). This means the analogue input is always connected.

Section 8, Sheet G113:

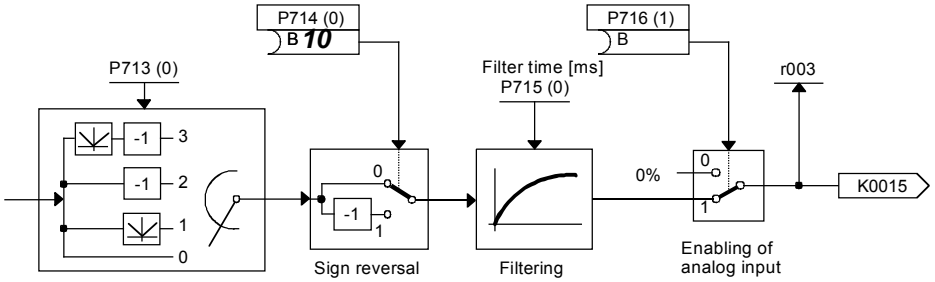

2. P645 = 15: Applies connector K0015 to the additional setpoint input when the setpoint is processed

Section 8, Sheet G135:

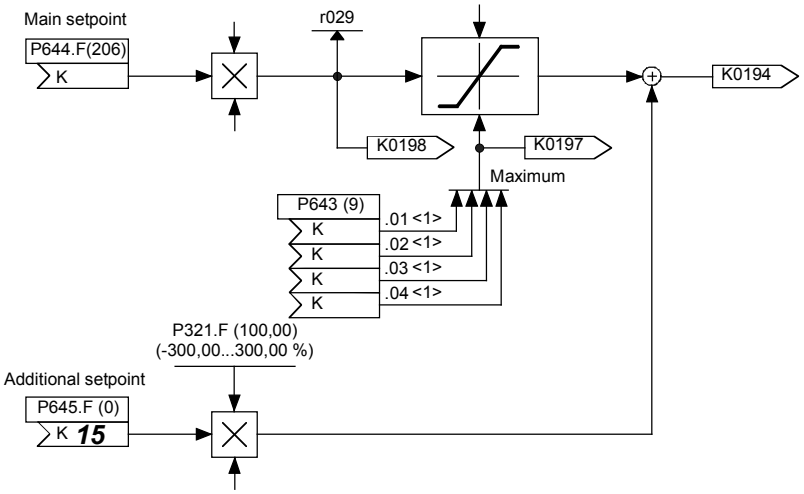

3. P750 = 15: Applies connector K0015 to the input of the function block for the analog output terminal 14. This example of K0015 illustrates how it is possible to apply a connector as an input signal to any number of function blocks.

Section 8, Sheet G115:

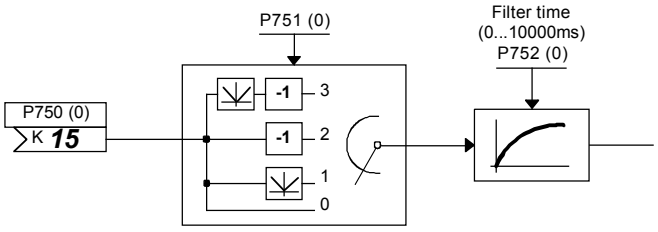

Example 2: The contents of connectors K0401 and K0402 must be output on the connector displays (parameter r043)

The following settings need to be made to create the correct links:

P044.index.01 = 401: Links connector K0401 to the 1st connector display
P044.index.02 = 402: Links connector K0402 to the 2nd connector display

Section 8, Sheet G121:

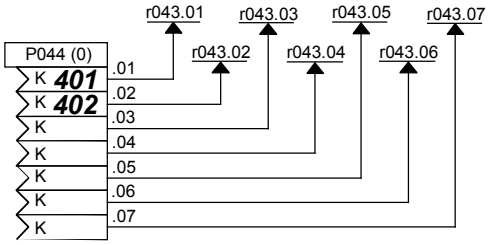

The following values are now displayed in parameter r043:

r043.index.02: Contents of connector K0401
r043.index.02: Contents of connector K0402
r043.index.03: 0
to
r043.index.07: 0

Parameter P044.index.03 to .07 remain at the works setting (0) (value in brackets next to parameter number) in this example, i. e. the contents of connector K0000 (=fixed value 0) are displayed on r043.index.03 to .07.

Setting parameters
(see also Section "Data sets")

In addition to the parameters that are used to select a signal (connector, binector), there are also parameters which define an operating mode or the parameter value of some function.

Representation in function diagrams:
Apart from parameter numbers, the function diagrams may also contain the factory setting, function and value range of parameters as supplementary information.



Setting parameter
Parameter number = P109, factory setting = 0

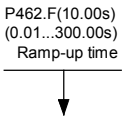

Setting parameter in function parameter set (".F" after parameter number)
Parameter number = P462, factory setting = 10.00s
Value range = 0.01...300.00s
Parameter for setting ramp-up time

Examples: P700 in function diagram Sheet G113 defines the signal type of the analog input (voltage input ±10V, current input 0...20mA, current input 4...20mA).

P705 in function diagram Sheet G113 determines the filter time for the analog input (adjustable in ms).

Parameters P520 to P530 in Section 8, Sheet G153 determine the shape of the friction characteristic.

P465 in Section 8, Sheet G126 determines whether the time settings must be multiplied by a factor of 1 or 60.

Data sets
See also Section "Switch over parameter sets"

Switch over function parameters (function data sets):

4 different sets of some parameters (function parameters) are available and can be selected by means of the "Switch over function parameters" function. The switchover operation is controlled by control word 2 (bits 16 and 17, see Section 8, Sheet G181 and G175). Index .01, .02, .03 or .04 of these parameters is operative depending on the status of the control bit.
The parameters of this parameter set are identified by an ".F" next to the parameter number in the function diagrams and by "FDS" under the parameter number in the tabulated parameter list.
The parameters belonging to the function parameter set must not be confused with other parameters which, by chance, also have 4 indices. The latter parameters are not affected by the "Switch over function parameters" function.

Switch over binector and connector parameters (Bico data sets):

2 different sets of some selection switches are available and can be selected by means of the "Switch over binector and connector parameters" function. The switchover function is controlled by control word 2 (bit 30, see Section 8, Sheet G181 and G175). The status of the control bit determines whether index.01 or index .02 of the parameter is operative.
The parameters of the Bico data set are identified by a ".B" next to the parameter number in the function diagrams and by "BDS" under the parameter number in the tabulated parameter list.
The parameters belonging to the Bico data set must not be confused with other parameters which, by chance, also have 2 indices. The latter parameters are not affected by the "Switch over binector and connector parameters" function.

Display parameter

The values of certain signals can be output using display parameters (r parameters, n parameters). Connector displays (Section 8, Sheet G121) can be used to link all connectors with display parameters so that they can be displayed.

Representation in function diagrams:
Apart from the parameter number, the function diagrams may also include a function description for the parameter as supplementary information.



Display parameter

Parameter number = r316

Display of RFG (ramp-function generator) status

9.2 Computation cycles, time delay

Functions associated with analog inputs, analog outputs, binary inputs, binary outputs and interfaces, as well as function blocks associated with the motorized potentiometer, setpoint generation, ramp-function generator and closed-loop speed and current controls, are called up and calculated in synchronism with the firing pulses (i.e. every 3.333 ms at a line frequency of 50 Hz).

The parameter settings are processed in a further computation cycle with a cycle time of 20ms.

With regard to the transfer of parameter values via interfaces, it is important to remember that some transferred parameters must be converted to this 20 ms cycle before they can be applied, for example, in the firing pulse cycle.

9.3 Commands for switch on, shutdown and disabling of the firing pulses

NOTE

The commands described here for switch on, shutdown and disabling of the firing pulses are part of the command specified using “control word 1” (see Section 8, function diagram Sheet G180)
The Switch on/Shutdown (ON/OFF1)” and “enable operation” commands are controlled by default by the crane control contained in the SIMOTRAS HD or by the external safety monitoring system (“mechanical stop”) (see Section 6.1).
The commands “Disconnect voltage (OFF2)” and “Fast stop (OFF3)” are not used in standard applications.

9.3.1 Switch-on / shutdown (ON / OFF1): terminal 37 - control word 1, bit 0

The “Shutdown” command causes the controlled braking of the drive unit to a standstill, disabling of the firing pulse and dropout of any line contactor present if controlled by binector B0124.

The switch on command (bit 0 in control word 1) is formed from the logical operations:

- ON / OFF1 from the crane control (see Section 6.1), applied by P654=9360
- "Switch-on / Shutdown" signal from terminal 37 (ext. “electrical stop”)
- Bit 0 on the connector selected via P648
- Switch on commands from INCH and CRAWL

See also Section 8 function diagrams, Sheets G130 and G180.

Operating modes:

U617 = 0: Signal from terminal 37 not active, ON command comes from the crane control

U617 = 1: AND operation between terminal 37 and ON from the crane control (ON only if both are log. 1). External "Electrical stop" via terminal 37

P648 = 9: The control bits in control word 1 are input bit-serially.
Bit 0 on the connector selected via P648 is not active.
The ON command is created depending on U617 (see above).

P648 $\neq$ 9: The connector selected via P648 is used as control word 1.
The ON command is created depending on U617 (see above). In addition, the signal generated there is ANDed with bit 0 of the connector selected via P648 (ON only if both signals are log. "1").

P445 = 0: The ON command is level-triggered.
The ON command is created depending on U617 and P648 (see above):
1=ON, 0=OFF

P445 = 1: The ON command is edge-triggered.
The ON command created depending on U617 is saved at the 0 $\rightarrow$ 1 transition. The binector selected in P444 must be in the log. "1" state. The memory and thus the OFF command is reset when this binector switches to the log. "0" state.

Sequence of operations for switching on drive:

1. Enter the "Switch-on" command (e.g. via terminal "Switch-on/shutdown")
2. The converter exits operating state 07
3. Any "line contactor" present will pull in if controlled via B0124

If "Enable operation" signal is applied:

5. With a positive brake release time (P087), output a "Release holding or operating brake" signal (binector B0250 = 1) and wait for P087 to run down in operating state o1.0, with a negative brake release time (P087 negative), go to step 6 immediately, brake remains closed (binector B0250 = 0)
6. Ramp-function generator, n and I controllers are enabled
7. When a negative brake release time (P087) has run down, output signal "Release holding or operating brake" (binector B0250 = 1).

Sequence of operations for shutting down drive:

1. Enter the "Shutdown" command (e.g. via terminal "Switch-on / shutdown")
2. Decelerate along ramp-function generator ramp
3. Wait until $n < n_{min}$ (P370, P371)
4. Output signal "Close holding or operating brake" (binector B0250 = 0)
5. Wait for brake closing time (P088) to run down
6. Input $i_{set} = 0$
7. Ramp-function generator and n controller are disabled
8. The pulses are disabled when I = 0
9. Any "line contactor" present will drop out if controlled via B0124
10. The converter reaches operating state o7.0 or higher

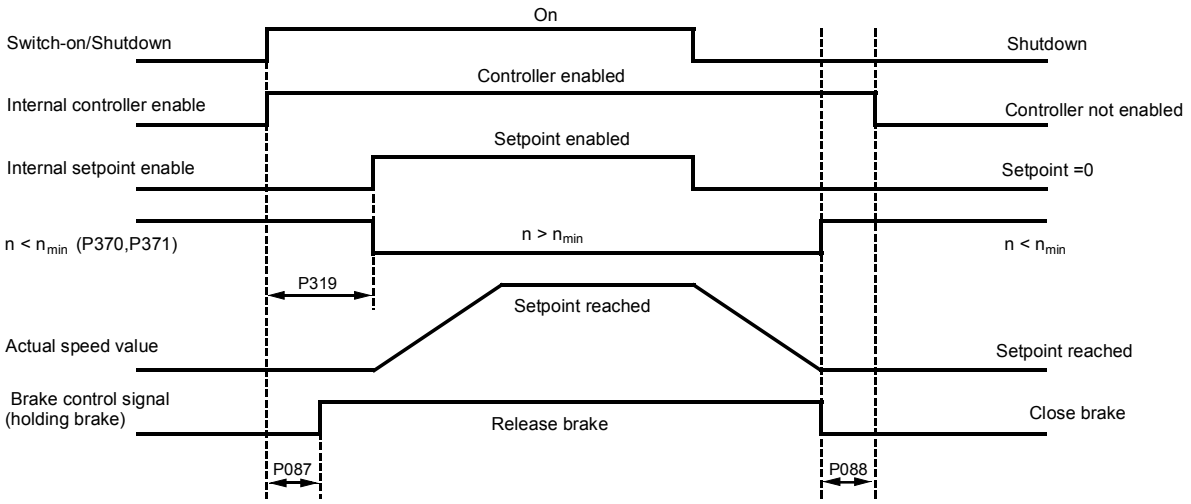

P087 Brake release time(negative in this case)
P088 Brake closing time
P319 Delay of setpoint enable

- When $n < n_{min}$ (P370, P371) is reached for the first time, an internal interlock is activated which prevents the drive from attempting to brake again if the motor is turned by external forces. The $n < n_{min}$ signal then disappears again.
- Changing the parameter setting between level and edge triggering affects the "Switch-on", "Shutdown" and "Crawl" commands.
- The "Switch-on" and "Crawl" commands are applied alternately when edge triggering is selected, i.e. a "Switch-on" edge at terminal 37 cancels a "Crawl" function triggered beforehand, and a "Crawl" edge at a binector selected in P440 cancels an active "Switch-on" edge.
- The converter cannot be restarted automatically after a brief failure of the electronics power supply when edge triggering is selected.

9.3.2 Operating enable: terminal 38 - control word 1, bit 3

The command “No enable operation” causes the fastest possible disabling of the firing pulses, but no drop out of any line contactor present, if controlled using binector B0124.

The enable operation command (bit 3 control word 1) is formed from the logical operations :

- Enable from the crane control (see Section 6.1), applied via P661=9382 and
- "Enable operation" signal from terminal 38 with crane drive control as described in Section 6 or
- Bit 3 on the connector selected via P648

See Section 8, Sheet G180.

Operating modes:

U618 = 0: Signal from terminal 38 not active, enable comes from the crane control

U618 = 1: AND operation between terminal 38 and enable from the crane control (enable only if both are log. 1).

P648 = 9: The control bits in control word 1 are input bit-serially.
Bit 3 on the connector selected via P648 is not active.
The operating enable command is generated from the AND operation between the enable signal from terminal 38 and the binector selected in P661 (see Section 8, Sheet G180).

P648 ≠ 9: The connector selected via P648 is used as control word 1. Bit 3 on this connector is ANDed with the enable operation signal as for the log. AND signal with P648=9.

To ensure that the "Operating enable" function can be activated, the conditions defined in the following diagram must be fulfilled:

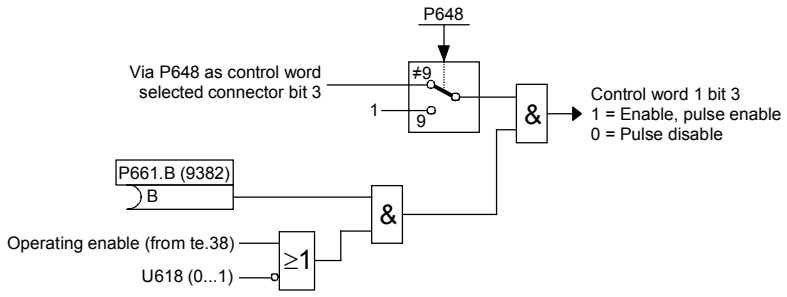

Sequence of operations for enabling operation (if a switch-on command is applied):

1. Enter the "Enable operation" command
2. With a positive brake release time (P087), output a "Release holding or operating brake" signal (binector B0250 = 1) and wait for P087 to run down in operating state o1.0, with a negative brake release time (P087 negative), go to step 3 immediately, brake remains closed (binector B0250 = 0)
3. Ramp-function generator, n and I controllers are enabled
4. Converter reaches operating state I, II or – –
5. When a negative brake release time (P087) has run down, output signal "Release holding or operating brake" (binector B0250 = 1).

Sequence of operations for cancellation of operating enable:

1. Cancel "Enable operation" command
2. Disable ramp-function generator, n and I controllers
3. Enter I_{set} = 0
4. The pulses are disabled when I = 0
5. Output signal "Close operating brake" (binector B0250 = 0, when P080 = 2)
6. The converter reaches operating state 0.10 or higher
7. Drive coasts to a standstill (or is braked by the operating brake)
8. When n < n_{min} (P370, P371) is reached, the signal "Close holding brake" is output (binector B0250, when P080 = 1)

9.3.3 OFF2 (voltage disconnection): control word 1, bit 1

The “voltage disconnection” command causes the fastest possible disabling of the firing pulses, and drop out of any line contactor present, if controlled using binector B0124.

The OFF2 signal is low active (log."0" state = voltage disconnection).

The following operating modes are possible:

P648 = 9: The control bits in control word 1 are input bit-serially. OFF2 is generated from the AND operation between the binectors selected with P655, P656 and P657 (see Section 8, Sheet G180).

P648 ≠ 9: The connector selected via P648 is used as control word 1. Bit 1 of this then controls the OFF2 function.

Sequence of operations for "Disconnect voltage":

1. Input "Disconnect voltage" command
2. Disable ramp-function generator, n and I controllers
3. I_{set} = 0 is applied
4. The pulses are disabled when I = 0
5. Output signal "Close operating brake" (binector B0250 = 0, when P080 = 2)
6. Converter reaches operating state o10.0 or higher
7. Any “line contactor” present will drop out if controlled via B0124
8. Drive coasts to a standstill (or is braked by the operating brake)
9. When n < n_{min} (P370, P371) has been reached, the "Close holding brake" signal is output (binector B0250 = 0, when P080 = 1)

9.3.4 OFF3 (Fast stop): control word 1, bit 2

The “fast stop” command causes the fastest possible braking of the drive to a standstill and then disabling of the firing pulses and drop out of any line contactor present, if controlled using binector B0124.

The OFF3 signal is LOW active (log."0" state = fast stop).

The following operating modes are possible:

P648 = 9: The control bits in control word 1 are input bit-serially. OFF3 is generated from the AND operation between the binectors selected with P658, P659 and P660 (see Section 8, Sheet G180).

P648 ≠ 9: The connector selected via P648 is used as control word 1. Bit 2 of this then controls the OFF3 function.

Sequence of operations for ”Fast stop”:

1. Input "Fast stop" command (e.g. binary input wired up to "Fast stop")
2. Ramp-function generator is disabled
3. Enter n_{set} = 0
4. up to SW 1.84: Decelerate along current limit
   from SW 1.90: Decelerate along reversal ramp acc. to P296, P297, P298 (plugging)
5. Wait until n < n_{min} (P370, P371)
6. Output signal "Close operating or holding brake" (binector B0250 = 0)
7. Wait for brake closing time (P088) to run down
8. Enter I_{set} = 0
9. Ramp-function generator and n controller are disabled
10. The pulses are disabled when I = 0
11. Any “line contactor” present will drop out if controlled via B0124
12. Converter reaches operating state o9.0 or higher

Sequence of operations for cancellation of "Fast stop":

1. Stop applying "Fast stop" command
2. Enter the "Shutdown" command (e.g. via terminal "Switch-on / shutdown")
3. Converter exits operating state o8

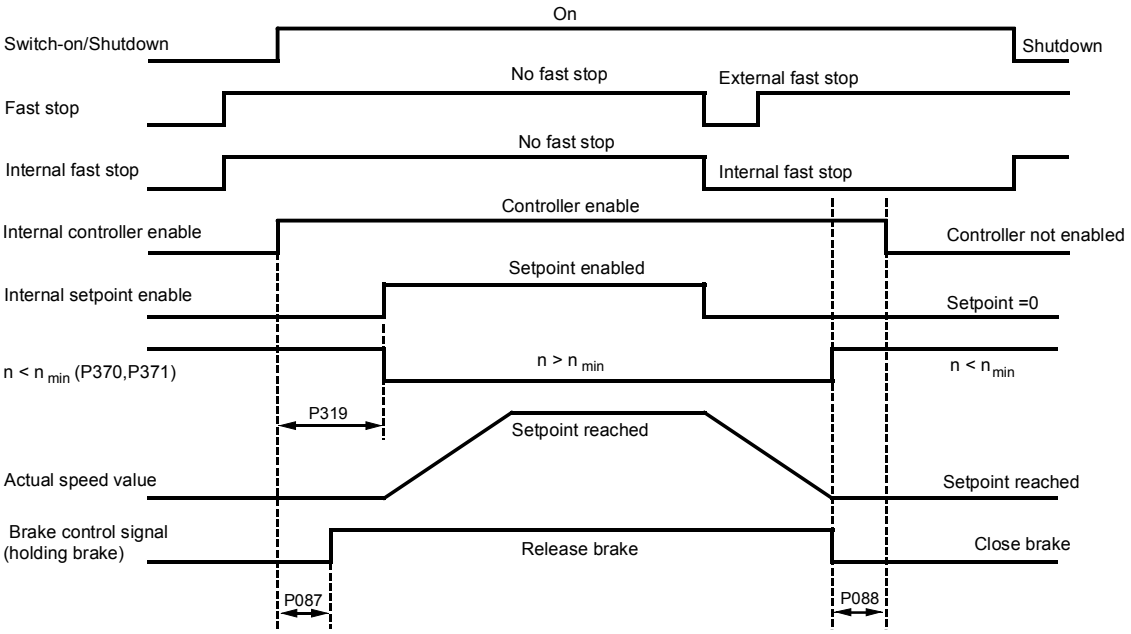

P087 Brake release time(negative in this case)
P088 Brake closing time
P319 Delay of setpoint enable

- The "Fast stop" command need only be applied as a short pulse (> 10 ms). It is then stored internally. The memory can be reset only by applying the "Shutdown" command ("0" signal on the terminal).
- All "Fast stop" commands are ANDed by the SIMOTRAS converter, i.e. all commands must be set to "No fast stop" before the function can be deactivated.
- When $n < n_{min}$ (P370, P371) is reached for the first time, an internal interlock is activated which prevents the drive from attempting to brake again if the motor is turned by external forces. The $n < n_{min}$ signal then disappears again.

9.4 Commands for specifying setpoints

NOTE

The commands described here for specifying setpoints are not used for standard applications.

9.4.1 Inching

See also Section 8, function diagram Sheet G129

The INCHING function can be preset via the binectors selected with indices .01 to .08 of parameter P435 or via bits 8 and 9 of control word 1.

When the control word option is used, the following operating modes are possible (see also function diagram, Sheet G180):

P648 = 9: The control bits in control word 1 are input bit-serially. The binectors selected in P668 and P669 determine bits 8 and 9 of control word 1 and thus the input of the INCH command.

P648 ≠ 9: The connector selected via P648 is used as control word 1.
Bits 8 and 9 of this control the INCHING input.

The “inching” function can only be executed when “Shutdown” ("0" signal on terminal 37) and “enable operation” ("1" signal on terminal 38) are applied.

The "Inch" command is input when one or several of the named sources (binectors, bits in control word) change to the log. "1" state. In this case, a setpoint selected in parameter P436 is assigned to each source.
An inching setpoint of 0 is applied if the inch command is input by two or more sources simultaneously.

Parameter P437 can be set to define for each possible inch command source (binector, bit in control word - logic operation, see block diagram in Section 8) whether or not the ramp-function generator must be bypassed. When the ramp generator is bypassed, it operates with ramp-up/down times of 0.

Sequence of operations for entering Inching command:

If “Inch” is specified, any “line contactor” which may be used is switched on (if controlled using B0124) and the inching setpoint is applied (procedure as for “Switch on / Shutdown”).

Sequence of operations for cancellation of Inching:

After the "Inch" command has been cancelled, the sequence of operations commences in the same way as for "Shutdown". After $n < n_{min}$ has been reached, the controllers are disabled and the line contactor opened after a parameterizable delay (P085) of between 0 and 60 sec. if controlled via B0124 (operating state 07.0 or higher). The drive remains in operating state 01.3 while the parameterizable delay period (max. 60.0 s) runs down.

9.4.2 Crawl

See also Section 8, function diagram Sheet G130

The "Crawling" function can be activated in operating state 07 and, with "Operation enabled", in the Run state.

The "Crawl" command is entered when one or several of the binectors selected in P440 switches to the log. "1" state. A setpoint selected in parameter P441 is assigned to each binector. If the "Crawl" command is entered via several binectors, the setpoint values are added (limited to ±200%).

Parameter P442 can be set to define for each possible crawl command source (binector) whether or not the ramp-function generator must be bypassed. When the ramp generator is bypassed, it operates with ramp-up/down times of 0.

Level / edge

P445 = 0: Level-triggered
Binector selected in P440 = 0: No crawl
Binector selected in P440 = 1: Crawl

P445 = 1: Edge-triggered
The input of "Crawl" is stored when the binector state changes from 0 → 1 (see Section 8, Sheet 130). The binector selected in P444 must be in the log. "1" state at the same time. The memory is reset when this binector switches to the log. "0" state.

Sequence of operations for entering Crawl command:

If “Crawl” is specified in operating condition o7, any “line contactor” used (if controlled via B0124) is switched on and the crawling setpoint applied via the ramp-function generator.
If the "Crawl" command is entered in the "Run" state, the drive decelerates from the operating speed to the crawling setpoint via the ramp-function generator.

Sequence of operations for cancellation of Crawling:

With "Crawling" active, but no "Switch-on" command applied:
If all bits which activate the "Crawling" function switch to log. "0", the controllers are disabled after $n < n_{min}$ is reached and any line contactor present is de-energized if controlled via B0124 (operating state o7.0 or higher).

With "Crawling" active from "Run" operating state:
If all bits which activate the "Crawling" function switch to log. "0" and if the conditions for the "Run" operating state are still fulfilled, then the drive accelerates from the set crawling speed to the operating speed via the ramp-function generator.

See also Section 9.3.1 (Switch on / Shutdown) with regard to edge triggering and automatic re-start.

9.4.3 Fixed setpoint

See also Section 8, function diagram Sheet G127

The "Fixed setpoint" function can be activated in the "Run" state with the "Enable controllers" signal applied.

The "Fixed setpoint" function can be input via the binectors selected via indices .01 to .08 of parameter P430 and via bits 4 and 5 of control word 2 (= bits 20 and 21 of complete control word) (see function diagram in Section 8 for logic operation).

When the control word method is used, the following operating modes are possible (see also Section 8, Sheet G181):

P649 = 9: The control bits in control word 2 are input bit-serially. The binectors selected via P680 and P681 determine bits 4 and 5 of control word 2 (= bits 20 and 21 of complete control word), and thus input of the "Fixed setpoint" function.

P649 ≠ 9: The connector selected via P649 is used as control word 2. Bits 4 and 5 of this word control the input of "Fixed setpoint".

The "Fixed setpoint" function is input when one or several of the named sources (binectors, bits in control word) switch to the log. "1" state. In this case, a setpoint selected in parameter P431 is assigned to each source. If "Fixed setpoint" is input via several sources simultaneously, the associated setpoints are added (limited to ±200%).

Parameter P432 can be set to define for each possible fixed setpoint source (binector, bit in control word - logic operation, see block diagram in Section 8) whether or not the ramp-function generator must be bypassed. When the ramp generator is bypassed, it operates with ramp-up/down times of 0.

Sequence for entering Fixed setpoint function:

The fixed setpoint is injected instead of the main setpoint.

Sequence for cancellation of Fixed setpoint function:

When all the possible sources for injecting the fixed setpoint (binectors, bits in control word) have changed back to log. "0", the setpoint selected in parameter P433 (main setpoint) is switched through again.

9.5 Ramp-function generator

See also Section 8, function diagram Sheet G136

NOTE

The following conditions must be fulfilled for the ramp-function generator to work:

- Ramp-function generator enable = 1 (control word 1.bit 4 = 1)
- Enable setpoint = 1 (control word 1.bit 6 = 1)

9.5.1 Definitions

Ramp-up = Acceleration from low, positive to high, positive speeds (e.g. from 10% to 90%) or from low, negative to high, negative speeds (e.g. from -10% to -90%)

Ramp-down = Deceleration from high, positive to low, positive speeds (e.g. from 90% to 10%) or from high, negative to low, negative speeds (e.g. from -90% to -10%)

On transition from negative to positive speeds, e.g. -10% to +50%:
From -10% to 0 = ramp-down and
From 0 to +50% = ramp-up and vice versa

Ramp-up time refers to the time required by the ramp-function generator to reach the 100% output value, with a lower and upper transition rounding of 0 and a step change in the input quantity from 0 to 100% or from 0 to -100%. The rate of rise at the output is the same in response to smaller step changes in the input quantity.

Ramp-down time refers to the time required by the ramp-function generator to reach the 0% output value, with a lower and upper transition rounding of 0 and a step change in the input quantity from 100% to 0 or from -100% to 0. The rate of rise at the output is the same in response to smaller step changes in the input quantity.

9.5.2 Operating principle of ramp-function generator

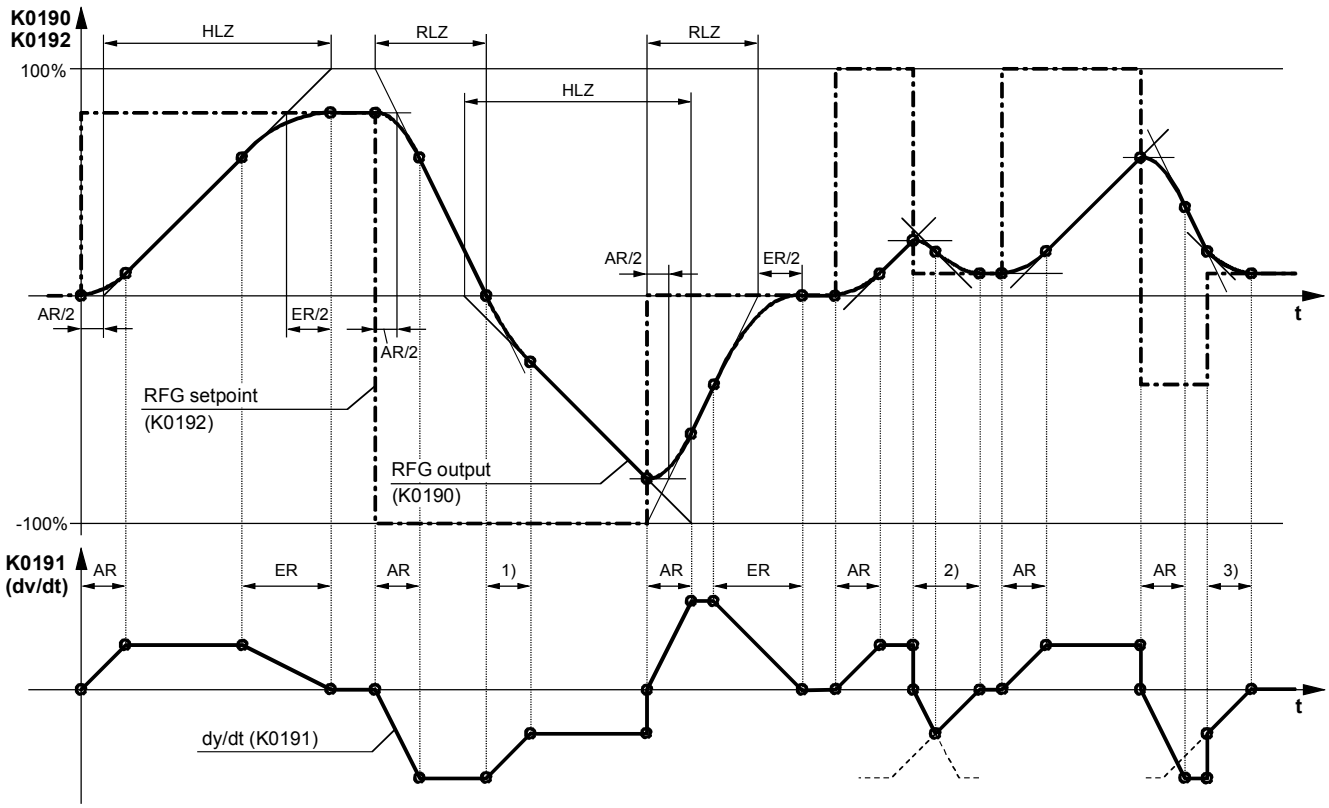

HLZ ... Ramp-up time (P303, P307, P311), RLZ ... Ramp-down time (P304, P308, P312)
AR ... Lower transition rounding (P305, P309, P313), ER ... Upper transition rounding (P306, P310, P314)

1) Transition from the ramp-down gradient to the ramp-up gradient
2) A transition from the lower rounding to upper rounding takes place before the maximum ramp-down gradient is reached
3) The ramp-function generator input step means that only the final part of the upper transition rounding is performed

9.5.3 Control signals for ramp-function generator

The ramp-function generator operating mode can be preset by the following control signals:

Ramp-function generator start (control word 1.bit 5):
1 = Setpoint is injected at ramp-function generator input
0 = Ramp-function generator is stopped at current value (generator output is injected as generator input).

Enable setpoint (control word 1.bit 6):
1 = Setpoint enabled at ramp-function generator input
0 = Ramp-function generator setting 1 is activated and 0 applied at the input (generator output is reduced to 0)

Set ramp-function generator:
1 = The ramp-function generator output is set to the setting value (selected in P639)

Enable ramp-function generator (control word 1.bit 4):
0 = Ramp generator disabled, generator output is set to 0
1 = Ramp-function generator enabled

Ramp-up integrator operation (parameter P302):
See below and Section 11, Parameter List, parameter P302

Enable switchover of ramp-up integrator (select via P646):
See below

Ramp-function generator settings 2 and 3
See below

Ramp-function generator tracking ON (parameter P317):
See below and Section 11, Parameter List, parameter P317

Set ramp-function generator on shutdown (parameter P318):
See Section 11, Parameter List, parameter P318

Bypass ramp-function generator:
1 = Ramp-function generator operates with ramp-up/ramp-down time of 0

The function is controlled via the binector selected in P641.
The ramp generator can also be bypassed in INCHING, CRAWLING and INJECTION OF FIXED SETPOINT modes.

9.5.4 Ramp-function generator settings 1, 2 and 3

Selection via binectors selected in parameters P637 and P638

Status of binector selected by parameter		Ramp function generator setting	Effective runup time	Effective rundown time	Effective lower transition rounding	Effective upper transition rounding
P637	P638					
0	0	1	P303	P304	P305	P306
1	0	2	P307	P308	P309	P310
0	1	3	P311	P312	P313	P314
1	1	Not permitted, activates fault message F041 (selection not clear)				

The ramp-function generator settings preset via the binectors selected in P637 and P638 have priority over the generator setting specified via the ramp-up integrator.

The selection parameter for the switchover to RFG setting 2 is set to 129 in the factory setting (binector B0129: 0=positive speed setpoint / hoist, 1=negative speed setpoint / lower). Thus, switching takes place automatically to RFG setting 1 for hoisting and to RFG setting 2 for lowering.

9.5.5 Ramp-up integrator

The ramp-up integrator is activated by setting P302 = 1, 2 or 3. After an "ON" command ("Switch-on", "Inching", "Crawling"), ramp-function generator setting 1 (P303 to P306) is applied until the ramp-function generator output reaches the required setpoint for the first time.

The remaining sequence of operations is controlled by the "Enable switchover of ramp-up integrator" function (binector selected in P646).

Enable switchover of ramp-up integrator = 1:
As soon as the ramp-function generator output reaches the required setpoint for the first time after the "ON" command, the ramp generator setting selected in P302 is activated automatically.

Enable switchover of ramp-up integrator = 0:
Ramp-function generator setting 1 (P303 to P306) remains active after the generator output has reached its setpoint until the "Enable switchover of ramp-up integrator" function is switched to 1. The ramp generator setting then changes to that selected in P302.

When the enable signal for ramp-up integrator switchover is cancelled ($\rightarrow$ 0), ramp-function generator setting 1 is activated again and, with a new enable command ($\rightarrow$ 1), this setting continues to remain active until the generator output has reached its setpoint again. The ramp generator setting selected in P302 is then activated again.

When a "Shutdown" command is given, the drive is shut down according to setting 1.

Note:
Activation of "Ramp-function generator setting 2" (P307 to P310, selected in P637), or "Ramp-function generator setting 3" (P311 to P314, selected in P368), has priority over the generator setting selected by means of the "Ramp-up integrator" function.

9.5.6 Ramp-function generator tracking

The ramp-function generator output (K0190) is limited to the following values when ramp-function generator tracking is activated:

$$\frac{-I_{A,limit} * 1.25}{K_p} + n_{act} \quad < \quad \text{RFG output} \quad < \quad \frac{+I_{A,limit} * 1.25}{K_p} + n_{act}$$

n_{act}	Actual speed value (K0167)
$+ I_{A, limit}$	Lowest positive current limit (K0131)
$- I_{A, limit}$	Lowest negative current limit (K0132)
K_p	Effective speed controller gain

However, if the value added to n_{act} were to correspond to less than 1%, then +1% or –1% would be added.

The purpose of the "Ramp-function generator tracking" function is to ensure that the ramp generator value cannot deviate excessively from the actual speed value once the current limit has been reached.

Note:
When ramp-function generator tracking is selected, the filter time for the speed setpoint should be set to a low value in P228 (preferably to 0).

9.5.7 Limitation after ramp-function generator

Since the input signal can be freely selected, this limiter stage can be used completely independently of the ramp-function generator.

A special feature of this limiter is that the lower limit can also be set to positive values and the upper limit to negative values (see P300 and P301). This type of limit setting then acts as a lower limit (minimum value) for the ramp generator output signal in the other sign direction.

Example: P632.01-04 = 1 (= 100.00%)
P300 = 100.00 (%)
P301 = 10.00 (%)
P633.01-04 = 9 (= -100.00%)
results in a limitation of the value range for K0170 to between +10.00% and +100.00%

9.5.8 Velocity signal dv/dt (K0191)

This signal specifies the change in the ramp-function generator output K0190 in the time period set in P542.

9.6 Speed controller

See also Section 8, function diagram Sheet G151 and G152

Control signals for speed controller

The control signals for "Enable speed controller droop", "Enable speed controller" and "Switch over master/slave drive" are supplied by control word 2. The following operating modes are possible (see also Section 8, Sheet G181):

P649 = 9: The control bits in control word 2 are input bit-serially.
The binectors selected in P684, P685 and P687 determine bits 8, 9 and 11 of control word 2 (= bits 24, 25 and 27 of complete control word), and thus the functions "Enable speed controller droop", "Enable speed controller" and "Switch over master/slave drive".

P649 ≠ 9: The connector selected in P649 is used as control word 2.
Bits 8, 9 and 11 control the functions "Enable speed controller droop", "Enable speed controller" and "Switch over master/slave drive".

Enable speed controller:

0 = Disable controller, controller output (K0160) = 0, P component (K0161) = 0, I component (K0162) = value of connector selected in P631
1 = Enable controller

Enable droop:

0 = Droop is not active
1 = Droop is active

Switch over master/slave drive:

0 = Master drive
1 = Slave drive

When "Slave drive" is selected, the I component of the speed controller is made to "track" such that M(set, n contr.) = M(set, limit.), the speed setpoint is set to equal the actual speed (K0179) (enable tracking with P229).

Set I component (selection of control signal via parameter P695):

When 0 ⇒ 1 signal transition of selected binector, the I component is set to the setting value (selected in parameter P631)

Stop I component (selection of control signal via parameter P696):

0 = I component enabled
1 = Stop I component

Limitation active:

This signal is in the log. "1" state when the upper or lower torque limitation is violated, the speed limiting controller is active, the current limitation is active or when the firing angle reaches the limit.
In this case, the I component of the speed controller is stopped.

Switch over to P controller:

The P controller function is activated (I component = 0) when the speed drops to below the changeover value.
Enabling of function via P698

D component in actual value channel or setpoint/actual value deviation channel

As a basis for selecting the correct derivative action time, it is necessary to calculate the maximum possible rate of rise at the derivative action element input, i.e. the period of time required by the input signal to change from 0 to 100% at this maximum rate of rise. The derivative action time should preferably be set to a shorter value than this period.

9.7 Switch on auxiliaries

The function acts as a switch-on command for auxiliaries (e.g. motor fan).

The "Switch on auxiliaries" signal is available at binector B0251 and inverted on B0256:

B0251 log. "0" state = Auxiliaries OFF
log. "1" state = Auxiliaries ON

To act as the auxiliaries drive signal, this binector must be "wired up" to a binary output, e.g. by setting P771 to 252 for connection to output terminals 46 / 47 (see Section 8, Sheet G112, for other possible settings).

The "Switch on auxiliaries" signal switches to "high" at the same time as the "Switch on" command. The converter then waits in operating state o6.0 for a parameterizable delay period (P093). Any “line contactor” used will then be activated if controlled via B0124
When the "Shutdown" command is entered, the firing pulses are disabled when $n < n_{min}$ is reached and any line contactor used drops out (if controlled via B0124). The "Switch on auxiliaries" signal switches to "low" after a parameterizable delay period (P094). However, if the "Switch on" command is entered again before this delay has expired, then the converter does not stay in operating state o6.0, but any line contactor used is closed immediately instead (if controlled via B0124).

9.8 Switch over parameter sets

See also in Section 9.1 under heading "Data sets"

WARNING

Parameter sets can be switched over while the converter is in operation (online). As a result, depending on the setting of the control bits when the motor is running, the configuration or functions may be altered in such a way as to produce dangerous operating conditions.

For this reason, we strongly recommend that a "basic" parameter set containing all basic parameter settings is created first and then copied into the other parameter sets (using P055 or P057) . The intentional changes vis-à-vis the "basic" version should then be entered in each parameter set.

The "Switch over parameter sets" function affects function parameters (identified by an ".F" next to parameter number in block diagrams in Section 8) and Bico parameters (identified by a ".B" next to parameter number in block diagrams in Section 8).

The following operating modes are possible (see also Section 8, Sheet G181):

P649 = 9: The control bits in control word 2 are input bit-serially.
The binectors selected in P676 and P677 determine bits 0 and 1 of control word 2 (= bits 16 and 17 of complete control word), and thus the input of the function data set.
The binector selected in P690 determines bit 14 of control word 2 (= bit 30 of complete control word), and thus the input of the Bico data set.

P649 ≠ 9: The connector selected in P649 is used as control word 2.
Bits 0 and 1 of control word 2 (bits 16 and 17 of complete control word) control the input of the function data set. Bit 14 (= bit 30 of complete control word) controls the input of the Bico data set.

Control word		Active function data set
Bit 16	Bit17	(active index)
0	0	1
1	0	2
0	1	3
1	1	4

Control word	Active Bico data set
Bit30	(active index)
0	1
1	2

Caution:

When the "Switch over parameter sets" function is activated, a time delay of up to 25ms may occur before the newly selected parameter set actually becomes operative.

For information about copying parameter sets, please see Section 11 (Parameter List), parameters P055 and P057.

9.9 Serial interfaces

The SIMOTRAS 6SG70 converter is equipped with the following serial interfaces:

- **G-SST1** (serial interface 1)
  Connector X300 on board A7005 (operator panel)
  USS® protocol
  provided for the purpose of connection the OP1S operator panel
- **G-SST2** (serial interface 2)
  Terminal strip X172 (terminals 56 to 60) on board A7001
  USS® and peer-to-peer protocol, parameterizable

Additionally if board A7006 (terminal expansion) is installed:

- **G-SST3** (serial interface 3)
  Terminal strip X162 (terminals 61 to 65)
  USS® and peer-to-peer protocol, parameterizable

Interface hardware

The hardware of G-SST1 is designed to operate in RS232 and RS485 standard / two-wire mode, and G-SST2 and G-SST3 in RS485 standard / two and four-wire mode. For connectors and terminal assignments, see Section 8, Sheets G170 to G174.
The maximum cable length for a peer-to-peer connection from the transmitter to the last receiver connected to the same transmission output is 1000 m. The same maximum cable length applies to the bus cable of a USS connection. The maximum cable length is only 500 m for both types of connection if a baud rate of 187500 bd is selected.

USS:
A maximum of 32 nodes can be connected in the bus configuration (i.e. 1 master and max. 31 slaves). The bus connector must be activated on the two bus nodes which form each end of the bus circuit.

Peer-to-peer:
Up to 31 other drives can be connected in parallel to the transmit cable of one drive. With a "parallel connection", the bus connector must be activated on the last connected drive.

9.9.1 Serial interfaces with USS® protocol

Specification for the USS® protocol: Order No. E20125-D0001-S302-A1

The SIEMENS USS® protocol is implemented in all digital converter devices supplied by SIEMENS. It can be used to provide a point-to-point or bus-type link to a master station. Any mixture of converter types can be connected up to the same bus line. The USS protocol makes it possible to access all relevant process data, diagnostic information and parameters of the SIMOTRAS converter.

The USS protocol is a pure master-slave protocol. In this case, a converter device can only ever function as slave. Converter devices will transmit a telegram to the master only if they have received one from it first. In other words, converters linked via the USS protocol cannot exchange data directly with one another (they can do this only via a peer-to-peer link).

Useful data which can be transferred via the USS protocol

Sheets G170 to G172 in Section 8 show how useful data can be interconnected and list the parameters relevant for configuring USS interfaces.

If parameters need to be read and/or written via the USS interface, then "Parameter data length" (P782, P792, P802) must be set to 3, 4 or 127 (select setting 4 only if double word parameters need to be transferred). If parameters do not need to be transferred, the "Parameter data length" must be set to 0.

The number of process data words to be transferred is basically identical for the transmit and receive directions and can be set in "Process data length" (P781, P791, P801). Numeric representation "100% equals 4000h = 16384d" applies to all connectors.

Transfer of double-word connectors:
In the receive direction, the values of any two adjacent connectors (K) are combined to form a double-word connector (KK) (e.g. K2002 and K2003 to KK2032). These double-word connectors can be connected in the usual way to other function blocks. For details of how to connect with double-word connectors, see Section 9.1, subsection "The following rules apply to the selection of double-word connectors".
In the transmission direction, a double-word connector is applied by entering the same double-word connector at two contiguous indices of the selection parameter.

Examples:

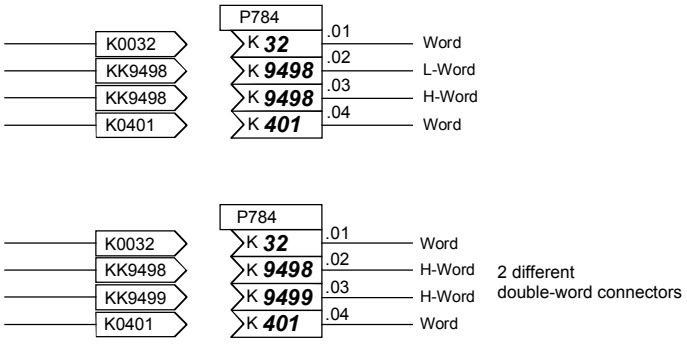

Numeric representation of parameter numbers and values on serial interfaces

The mode of numeric representation of a parameter value is determined by the parameter "type" assigned to each parameter in the Parameter List. The different types of parameter are explained at the beginning of the list. Parameters are always transmitted in the form specified in the "Value range" column of the Parameter List; any decimal point, however, is omitted (example: display value 123.45 → the number 12345d = 3039h is transferred via the serial interface).

Diagnostics and monitoring functions for USS interfaces

All transmitted and received useful data words can be checked (directly at the internal software transfer point from/to USS driver) by means of display parameters r810 / r811, r812 / r813 or r814 / r815.

Diagnostic parameters r789, r799 or r809 provide information about the chronological distribution of errored and error-free telegrams, as well as the nature of any communication errors that have occurred.

A watchdog can be set in P787, P797 or P807 which can initiate a shutdown on faults (F011, F012 or F013) in the case of timeout. By connecting binectors B2031, B6031 or B9031 to the fault message triggers (using P788=2031 / P798=6031 / P808=9031), it is possible to acknowledge these fault messages even if the fault is active continuously, thereby ensuring that the drive can still be operated manually after the USS interface has failed.

Important !

The serial interfaces for the USS protocol are parameterized with the same parameters used to configure the peer-to-peer protocol, although the setting ranges are different in some cases (see Notes for relevant parameters in Parameter List, Section 11).

USS protocol: Brief start-up guide for 6SG70 converters

	G-SST1 RS232 / RS485	G-SST1 RS485 for connection of an OP1S	G-SST2 / G-SST3 RS485
Select USS protocol	P780 = 2	P780 = 2	P790 / P800 = 2
Baud rate	P783 = 1 to 13, corresponding to 300 to 187500 baud	P783 = 6 (9600 Bd) or 7 (19200 Bd) The baud rate setting must be identical for every node in bus operation	P793 / P803 = 1 to 13, corresponding to 300 to 187500 baud
No. of process data (PZD No.) (applies to Receive and Send)	P781 = 0 to 16	P781 = 2	P791 / P801 = 0 to 16
PZD assignment for control word and setpoints (received process data)	All received process data are taken to connectors and must be wired up as required	If the control bits from the OP1S are to be used: Word 1 (connector K2001): Meaning of control bit from OP1S, see Sec. 7.2.2 Word 2 (connector K2002): Not used	All received process data are taken to connectors and must be wired up as required
No. of PKW	P782 = 0: No PKW data 3 / 4: 3 / 4 PKW data words 127: Variable data length for slave → master	P782 = 127 variable data length	P792 / P802 = 0: No PKW data 3 / 4: 3 / 4 PKW data words 127: Variable data length for slave → master
PZD assignment for actual values (transmitted process data)	Selection of transmitted values via P784	Word 1: P784.i01=32 (stat. word 1 K0032) Word 2: P784.i02=0	Selection of transmitted values via P794 / P804
Node address	P786 = 0 to 30	P786 = 0 to 30 Every node must have its own, unique address for bus operation	P796 / P806 = 0 to 30
Telegram failure time	P787 = 0.000 to 65.000s	P787 = 0.000s	P797 / P807 = 0.000 to 65.000s
Bus terminator	P785 = 0: bus terminator OFF 1: bus terminator ON	P785 = 0: bus terminator OFF 1: bus terminator ON	P795 / P805 = 0: bus terminator OFF 1: bus terminator ON
Bus / point-to-point communication	RS232: Only point-to-point operation possible RS485: Bus operation possible	Bus operation possible	Bus operation possible
2-wire / 4-wire transmission via RS485 interface	2-wire operation is selected automatically	2-wire operation is selected automatically	2-wire operation is selected automatically
Cable	Connector assignments, see Sect. 6.6 or Sheet 170 in Sect. 8	See operating instructions for OP1S operator panel	Connector assignments, see Sect. 6.6 or Sheets G171, G172 in Sect. 8

Connection example for a USS bus

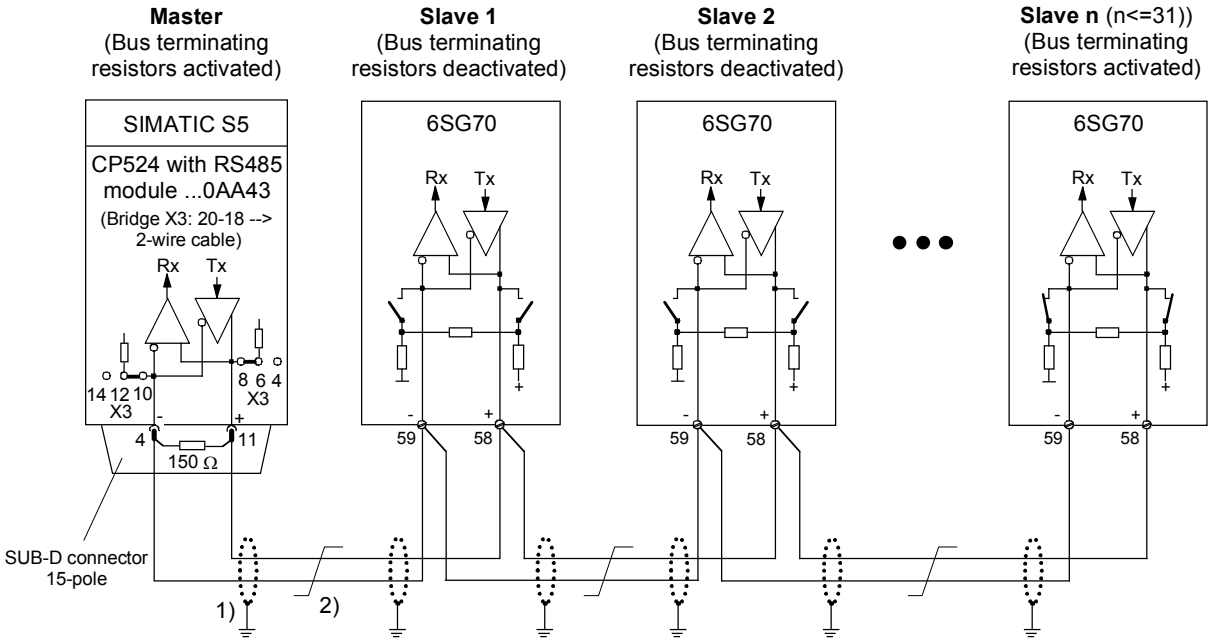

1)The interface cable shields should be connected at low impedance directly to the converters on the converter or cabinet ground (e.g. using a clamp).
2) Twisted-pair cable, e.g. LIYCY 2x0.5 qmm; in the case of longer cable runs, an equipotential bonding conductor should be used to ensure that the difference of the frame potentials between the connected units remains below 7V.

9.9.2 Serial interfaces with peer-to-peer protocol

The term "Peer-to-peer link" refers to a "Link between partners of equal status". In contrast to the classic master/slave bus system (e.g. USS and PROFIBUS), the same converter can function as both the master (setpoint source) and the slave (setpoint receiver) in a peer-to-peer link.

Signals can be transferred in fully digital form from one converter to another via the peer-to-peer link, for example:

- Velocity setpoints
- Torque setpoints
- Acceleration setpoints (dv/dt)
- Control commands

Useful data which can be transferred via the peer-to-peer link

Sheets G172 and G174 show how useful data can be interconnected and list the parameters relevant for configuring peer-to-peer links. Any connectors can be parameterized as transmit data (numeric representation: 100% equals 4000h = 16384d).

Parameters cannot be transferred via the peer-to-peer link.

Transfer of double-word connectors:
In the receive direction, the values of any two adjacent connectors (K) are combined to form a double-word connector (KK) (e.g. K6001 and K6002 to KK6081). These double-word connectors can be connected in the usual way to other function blocks. For details of how to connect with double-word connectors, see Section 9.1, subsection "The following rules apply to the selection of double-word connectors".
In the transmission direction, a double-word connector is applied by entering the same double-word connector at two contiguous indices of the selection parameter.

Examples:

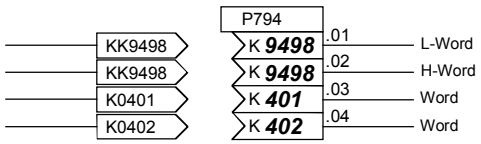

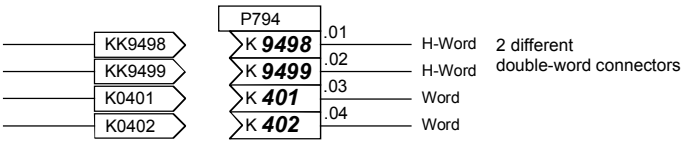

Diagnostics and monitoring functions for peer-to-peer link

All transmitted and received useful data words can be checked (directly at the internal software transfer point from/to peer driver) by means of display parameters r812 / r813 or r814 / r815. Diagnostic parameters r799 or r809 provide information about the chronological distribution of errored and error-free telegrams, as well as the nature of any communication errors that have occurred.
A watchdog can be set in P797 or P807 which can initiate a shutdown on faults (F012 or F013) in the case of timeout. By connecting binectors B6031 or B9031 to the fault message triggers (using P798=6031 / P808=9031), it is possible to acknowledge these fault messages even if the fault is active continuously, thereby ensuring that the drive can still be operated manually after the peer-to-peer interface has failed.

Important !

The serial interfaces for the peer-to-peer protocol are parameterized with the same parameters used to configure the USS protocol, although the setting ranges are different in some cases (see Notes for relevant parameters in Parameter List, Section 11).

Peer-to-peer communication, 4-wire operation

Serial linking of converter to converter (partners of equal status).
The signal flow can pass through the drives, for example, in a series connection. In this case, each drive forwards the data after processing only to the next drive (classic setpoint cascade).

Brief start-up guide for 6SG70 converters

	G-SST2 RS485	G-SST3 RS485
Select peer-to-peer protocol	P790 = 5	P800 = 5
Baud rate	P793 = 1 to 13 corresponding to 300 to 187500 baud	P803 = 1 to 13 corresponding to 300 to 187500 baud
No. of process data (PZD No.) (applies to Receive and Send)	P791 = 1 to 5	P801 = 1 to 5
PZD assignment for control word and setpoints (received process data)	All received process data are taken to connectors and must be wired up as required	All received process data are taken to connectors and must be wired up as required
No. of PKW	No parameters can be transferred	No parameters can be transferred
PZD assignment for actual values (transmitted process data)	Selection of transmitted values via P794 (indices .01 to .05)	Selection of transmitted values via P804 (indices .01 to .05)
Telegram failure time	P797 = 0.000 to 65.000s	P807 = 0.000 to 65.000s
Bus terminator	P795 = 0: bus terminator OFF 1: bus terminator ON (depending on type of link)	P805 = 0: bus terminator OFF 1: bus terminator ON (depending on type of link)
2-wire / 4-wire transmission via RS485 interface	"4-wire" operation is automatically selected	"4-wire" operation is automatically selected
Cable	Terminal assignments, see Section 6.6 or Sheet G173 in Section 8	Terminal assignments, see Section 6.6 or Sheet G174 in Section 8

Examples of peer-to-peer links

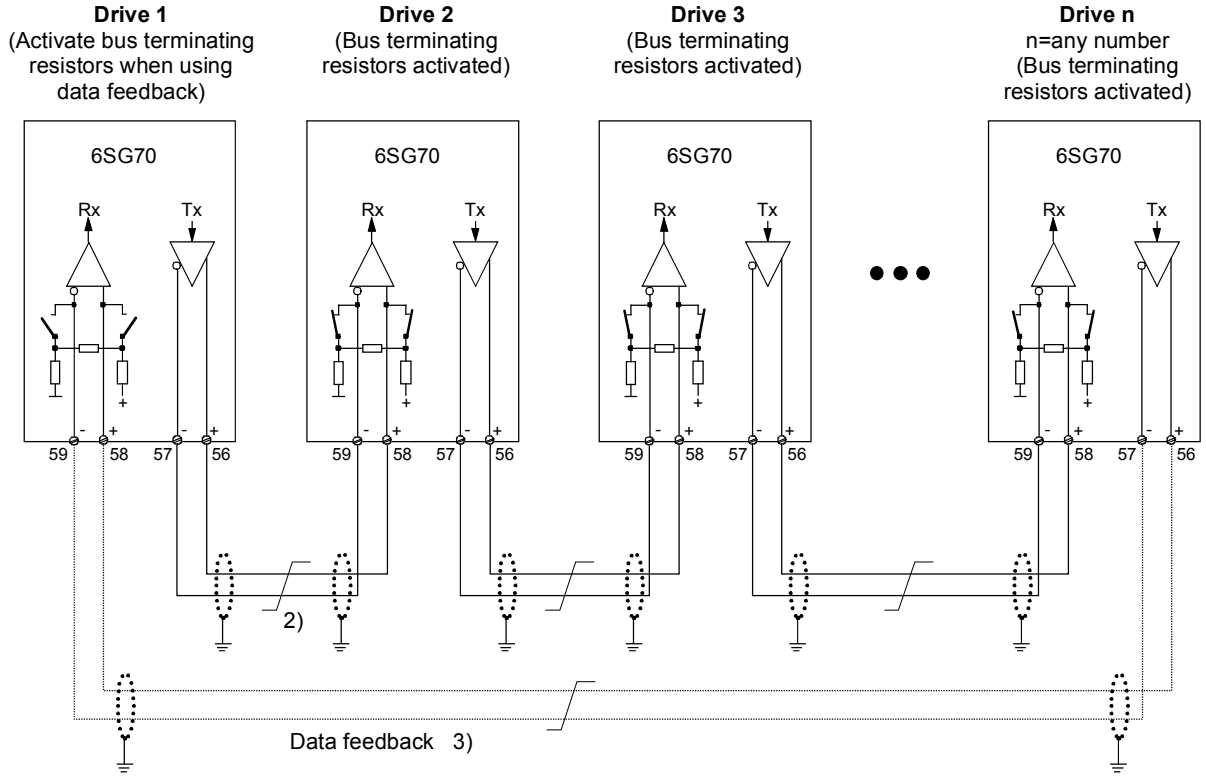

Type of peer connection "Series connection"

Each drive receives its setpoint from the preceding drive (classical setpoint cascade)

1) The interface cable shields should be connected at low impedance directly to the converters on the converter or cabinet ground (e.g. using a clamp).
2) Twisted-pair cable, e.g. LIYCY 2x0.5 qmm; in the case of longer cable runs, an equipotential bonding conductor should be used to ensure that the difference of the frame potentials between the connected units remains below 7V.
3) Optional data feedback that drive 1 uses to monitor the operation of the entire peer-to-peer network.

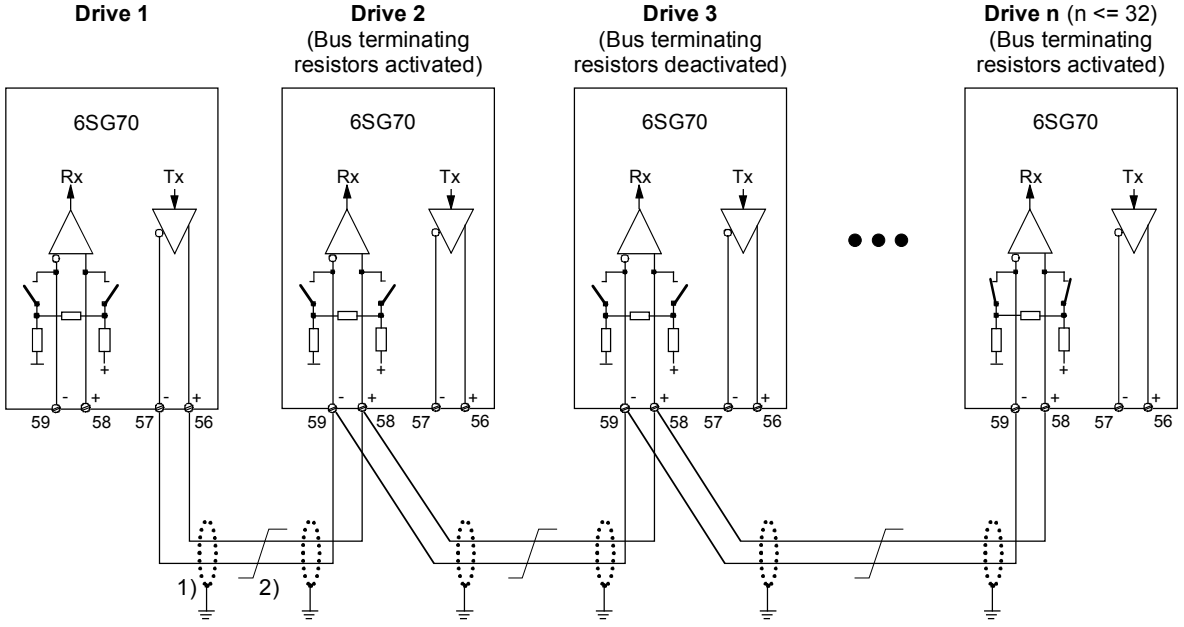

Type of peer connection "Parallel conenction"

Up to 31 drives receive identical setpoints from drive 1

1) The interface cable shields should be connected at low impedance directly to the converters on the converter or cabinet ground (e.g. using a clamp).
2) Twisted-pair cable, e.g. LIYCY 2x0.5 qmm; in the case of longer cable runs, an equipotential bonding conductor should be used to ensure that the difference of the frame potentials between the connected units remains below 7V.

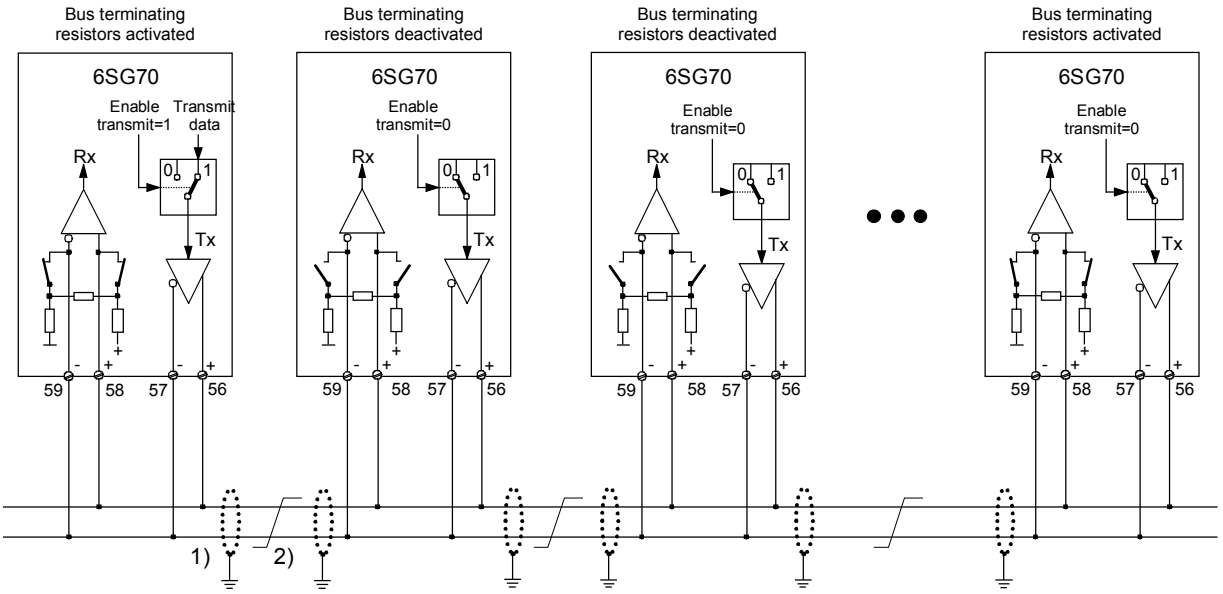

Type of peer connection "Bus connection"

Up to 31 drives receive identical setpoints from a drive. The transmitting drive is selected with "Enable transmit" = 1. "Enable transmit" must be = 0 for all other drives.

1) The interface cable shields should be connected at low impedance directly to the converters on the converter or cabinet ground (e.g. using a clamp).
2) Twisted-pair cable, e.g. LIYCY 2x0.5 qmm; in the case of longer cable runs, an equipotential bonding conductor should be used to ensure that the difference of the frame potentials between the connected units remains below 7V.

9.10 Thermal overload protection of motor (I^2t monitoring of motor)

The I^2t monitoring function is parameterized in parameters P100, P113 and P114. If these parameters are adapted correctly, the motor is protected against overloading (not all-round motor protection).

Adaptation

P114: A time constant T_{motor} in minutes for the I^2t monitoring function must be entered in parameter P114.

P113, P100: The permissible continuous current of the motor must be defined by parameters P100 and P113.
The permissible continuous current is the product of the calculation P113 * P100.

Warning characteristic / switch-off characteristic

If the motor is loaded constantly, for example, with about 125% of the permissible continuous motor current, then alarm A037 is triggered after a time constant (P114) has elapsed. If the load is not reduced, then the drive is shut down when the switch-off characteristic is reached and fault message F037 displayed.
Warning/switch-off times for other loads can be calculated from the diagram.

Alarm message triggering by motor I^2t monitoring function

This diagram shows how long it takes for an alarm message to be triggered if, after a long preloading period (> 5 * T_th), a new constant load value is injected abruptly.

T_th = P114 .. thermal time constant of motor

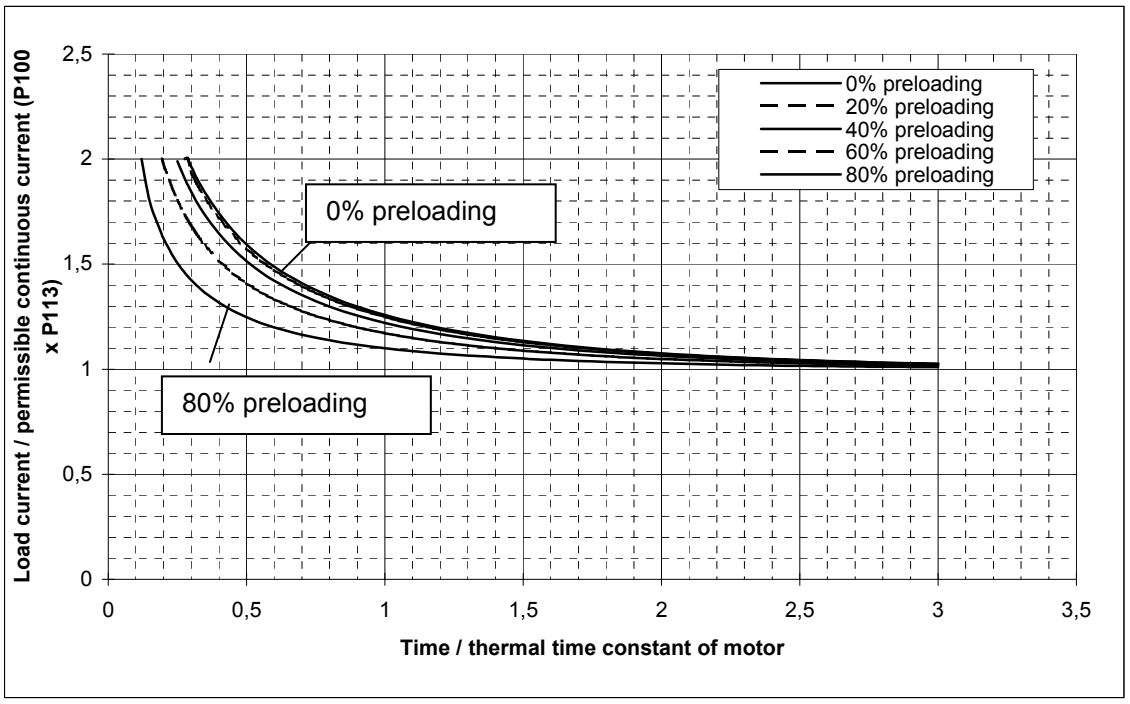

Fault message triggering by motor I²t monitoring function

This diagram shows how long it takes for a fault message to be triggered if, after a long preloading period (> 5 * T_th), a new constant load value is injected abruptly.

T_th = P114 .. thermal time constant of motor

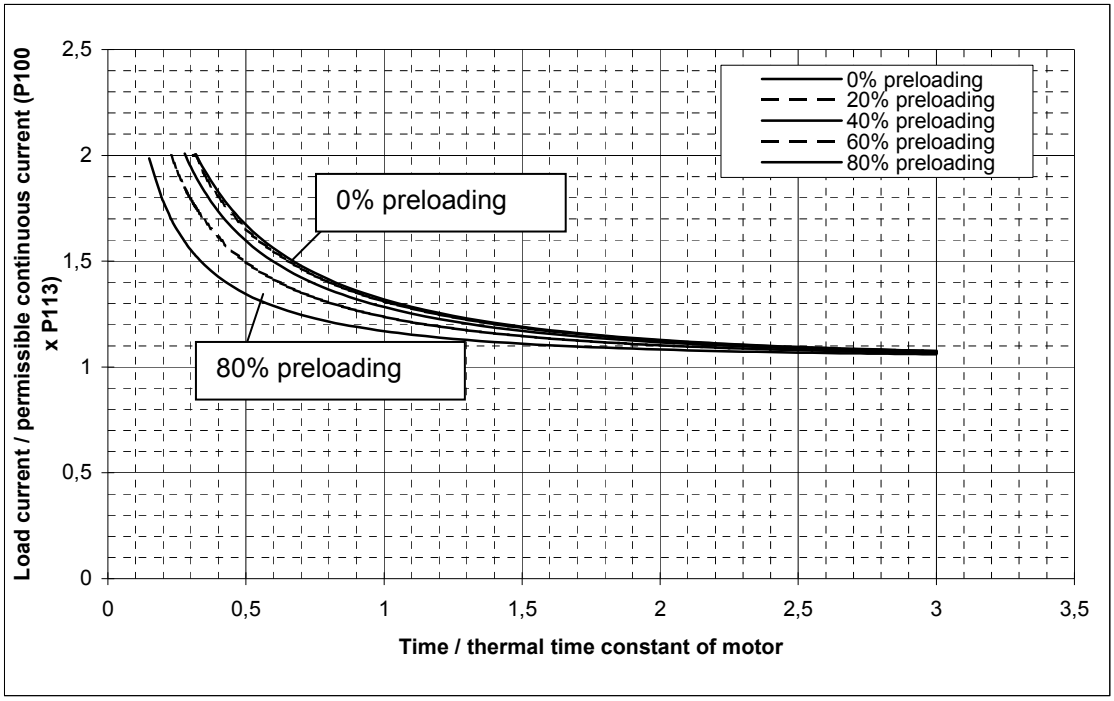

NOTE

When the electronics power supply fails for longer than 2 s, the calculated motor preloading value is lost. When the supply is reconnected, the system assumes that the connected motor has not been loaded at all!
If the converter is switched on again (e.g. with "Automatic restart function") within 2 s of the electronics power supply failing, then the last calculated I²t value of the motor is applied.

The I²t monitoring function reproduces only a rough thermal image of the motor, i.e. it does not provide all-round motor protection.

If P114 (T_{motor}) is set to zero, then the I²t monitoring function is deactivated.

9.11 Automatic restart

The "Automatic restart" function is controlled by the setting in parameter P086:

P086 = 0	No automatic restart
P086 = 0.1s to 2.0s	”Automatic restart" in seconds

The purpose of the "Automatic restart" function is to prevent the SIMOTRAS converter from switching immediately to the "FAULT" state, but allow it to return to the "Run" state after the elimination of certain fault conditions such as brief failures in supply voltages, brief undervoltage or overvoltage, excessively high or low line frequencies.

The appropriate fault message is output only if one of the following fault conditions prevails continuously for longer than the "Automatic restart time" set in P086 (maximum time delay within which fault condition must be eliminated for "Automatic restart"):

F001 Failure of electronics supply in operation (5U1, 5W1)

F004 Phase failure in the supply to the power section (1U1, 1V1, 1W1)

F006 Undervoltage in the supply to the power section

F007 Overvoltage in the supply to the power section

F008 Mains frequency below 45Hz

F009 Mains frequency above 65Hz

When one of the fault conditions associated with faults F004, F006, F008, F009 is active and the automatic restart time delay is still running, the converter dwells in operating state 04.0.

Failures in the electronics supply lasting up to several 100 ms are bridged by the back-up power supply. With longer failures, the failure time is measured by measuring the voltage across one "discharge capacitor" and, if the failure has not lasted as long as the "Restart time" set in P086, the converter restarted again immediately provided that the corresponding control signals (e.g. "Switch-on", "Operating enable") are still applied.

When the "Switch-on", "Shutdown" and "Crawl" functions are edge-triggered (see P445 = 1), the converter cannot be restarted automatically after the power supply backup has been used.

9.12 Status description of some bits of status word ZSW1

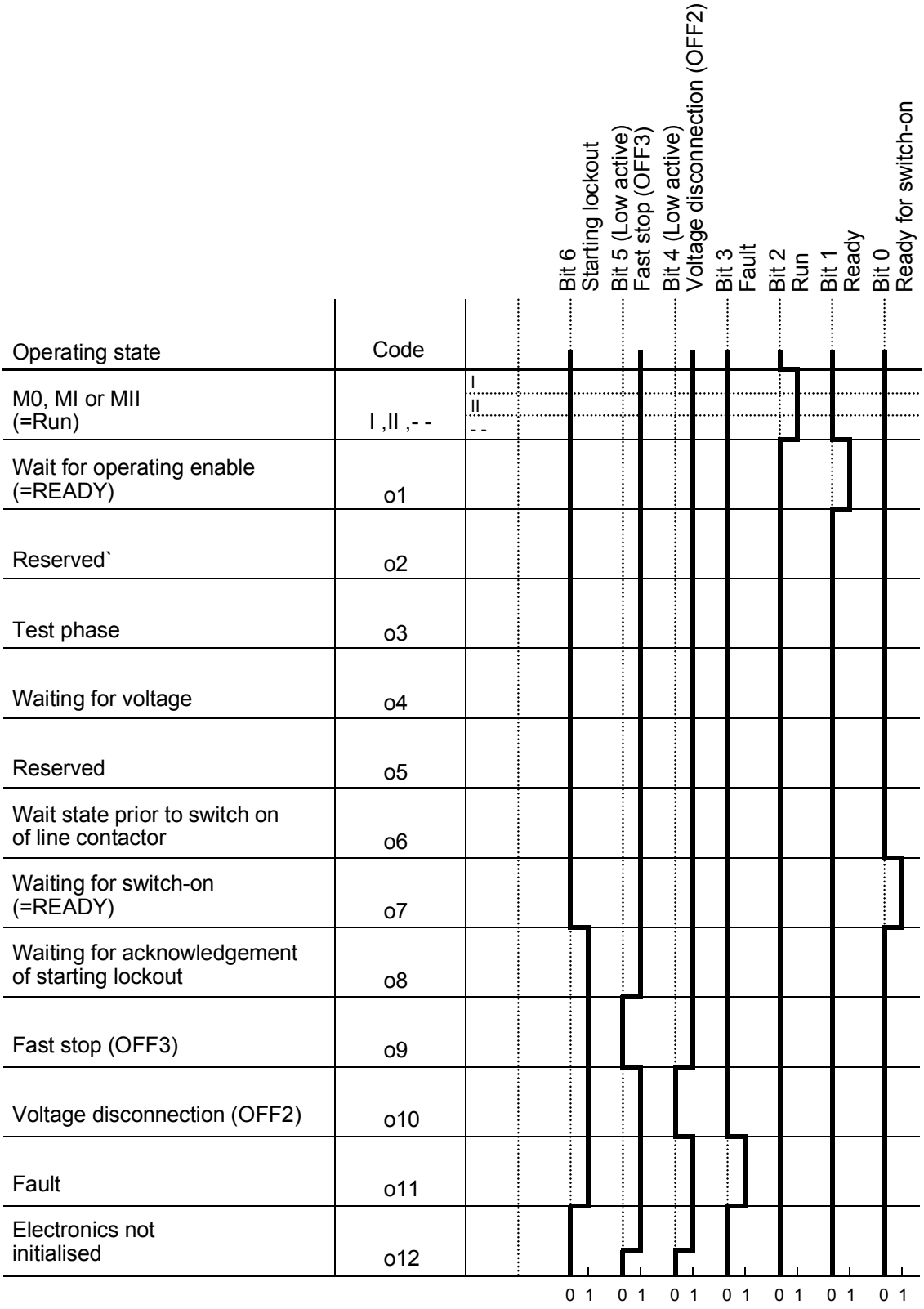

10 Faults and alarms

When a fault or alarm message is activated, it is displayed both on the simple operator control panel (PMU) and on the OP1S user-friendly operator control panel (see also Section 7.2, Operator control panels).
An alarm stops being displayed immediately the cause of the alarm signal has been eliminated.
A fault message must be cancelled by pressing the P key on the PMU or Reset key on the OP1S (panel must be in "Operational display" status) as soon as the cause has been eliminated.

NOTE

Setting parameters when fault or alarm message is active

On the PMU:
You can shift an active fault message or alarm "to the background" by pressing the P key and Higher key simultaneously on the PMU.
If you do not press any key on the PMU within a 30 s period, the fault message or active alarm in the background is automatically displayed again.
You can fetch a message back to the foreground earlier by pressing the P key and Lower key simultaneously on the PMU when the parameter number level is selected.

On the OP1S:
You can set parameters normally even if a fault message or alarm is active.

10.1 Fault messages

10.1.1 General information about faults

Fault message display:

On the PMU: F (fault) and a three-digit number. The red LED (Fault) lights up.
On the OP1S: On bottom line of operational display: The red LED (Fault) lights up.

Only one current fault message can be displayed at a time, i.e. other simultaneously active faults are ignored.

Many fault messages can only occur in certain operating states.
(see list of fault messages)

The system responses to a fault are as follows:

- The stator current is reduced, the firing pulses are disabled and the SIMOTRAS unit switches to operating state o11.0 (fault)
- Fault message is displayed on the operator panel (PMU, OP1S)
- B0106 (= status word 1, bit 3) is set and B0107 cancelled (see also alarm bits for special faults such as undervoltage, overtemperature, external faults, etc.)
- The following parameters are refreshed:
  r047 fault diagnostic memory
  (The displayed values are decimal. For bit-serial evaluation, the values must be converted from decimal to binary notation, e.g. to be able to determine the relevant terminal in the case of F018)
  r049 Fault time
  r947 fault memory, see also r947 in Section 11, Parameter List
  r949 fault value
  (The displayed values are decimal. For bit-serial evaluation, the values must be converted from decimal to binary notation, e.g. to be able to determine the relevant terminal in the case of F018)
  P952 number of faults

A text is also displayed for each individual fault in parameter r951 (fault text list). These texts can, for example, be displayed on the OP1S.

If a fault is not acknowledged before the electronics supply voltage is switched off, then fault message F040 will be displayed when the supply is next switched on.

10.1.2 List of fault messages

NOTE

Further information about the causes of fault messages

When a fault message is activated, values providing more information about the fault cause are stored in parameter r047. Where the values can be interpreted by the user, they are included in the following list of fault messages.
The value in r047.001 is referred to as the "fault value". This is also stored in r949 which also contains the fault values belonging to older fault messages. The values in r047 are overwritten when the next fault message occurs.
Values for r047 which are not included in the list below can help a SIEMENS specialist to locate a fault cause. For this reason, all indices of parameter r047 should be read out whenever a fault message occurs, even if the meaning of the individual indices of parameter r047 is not specified for every fault message listed below.

Please note: Before you contact SIEMENS with any query regarding a fault message, please make a note of the contents of all indices of parameter r047.

Fault No.	Description: Cause as a function of fault value (r047.001, r949.001 or r949.009 with acknowledged error)	Description: Further information (r047.002 to r047.016)

10.1.2.1 Supply faults

F001	**Failure of electronics power supply** (active in all operating states) Failure of the electronics supply voltage (terminals 5U1, 5W1, 5N1) in “RUN” state for longer than the “restart” time set in parameter P086 or the electronics are operating on undervoltage. Possible fault causes: • Line contactor has opened in “RUN” state • Brief supply failure • Supply voltage too low Fault value:	r047 Index 002 to 016:
	1 Electronics supply voltage in “RUN” has been interrupted for longer than setting in P086	i002 Duration of actual supply failure in 1/10 seconds
	2 Supply failure prewarning responds periodically	-
	3 Supply failure prewarning is active for longer than 1.28 s	-
F002	**Anti-clockwise field on power connections (U1, V1, W1)** (active in all operating states)	
F004	**Phase failure on power connections (U1, V1, W1)** (active in operating states of ≤ o4) The supply voltage RMS value, calculated from the area of each supply half-wave (rectified average value * peak factor), must be greater than the response value for phase failure monitoring $P078.001 * \frac{P353}{100\%}$ The distance between two identical supply zero passages of a phase must not exceed 450 degrees. If one of these two conditions remains unfulfilled for longer than the “restart time” set in P086, a fault message is activated. After switch-on, the converter waits in operating states o4 and o5 together for a period not exceeding the setting in P089 for voltage to appear at the power terminals before activating the fault message. Possible fault causes: • Parameter P353 is incorrectly set • Line contactor has opened in operation • Fuse has blown in incoming power section supply • Interruption in a thyristor firing pulse cable (auxiliary cathodes at connectors X12, X14, X16 are voltage carriers). Fault value:	
	1 Voltage failure has occurred in supply (U1, V1, W1) (when P086=0)	
	2 Delay time set in parameter P089 has expired in operating state o4	
	3 Fuse has blown in power section	
	4 Voltage failure has lasted longer than period set in P086 (if this is >0)	
	5 2-phase current (e.g. because a phase is missing); check incoming power section supply and cabling for the motor	
	6 The "Main contactor checkback" (control word 2 bit 31) [see also P691] did not switch to "1" before the time set in P095 ran out, or switched back to "0" during operation [V1.8 and later].	
F006	**Undervoltage** (active in operating states of ≤ o4) The voltage at terminals U1, V1 or W1 is lower than the response threshold for longer than the “restart time” set in P086 and the delay time according to P361 has expired. Response threshold for supply voltage: $P078.001 * (1 + \frac{P351}{100\%})$ Possible causes of fault • Line undervoltage • Monitoring values set too sensitively or incorrectly (P351, P078)	

Fault No.	Description: Cause as a function of fault value (r047.001, r949.001 or r949.009 with acknowledged error)	Description: Further information (r047.002 to r047.016)
	Fault value:	r047 Index 002 to 016:
	1 Undervoltage has occurred (when P086=0)	i002 Number of phase that has activated fault message 0 ... Phase UV 1 ... Phase VW 2 ... Phase WU i003 Incorrect voltage value (normalized to 16384)
	4 Undervoltage persists for longer than time set in parameter P086 (if this is set to >0)	-
F007	**Overvoltage** (active in operating states of ≤ o4) The voltage at terminals U1, V1 or W1 is higher than the response threshold (for longer than the "restart time" set in P086) and the delay time according to P362 has expired. Response threshold for supply voltage: $P078.001 * (1 + \frac{P352}{100\%})$ Possible causes of fault • Line overvoltage • Monitoring values set too sensitively or incorrectly (P352, P078)	
	Fault value:	r047 Index 002 to 016:
	1 Overvoltage has occurred	i002 Number of phase that has activated fault message 0 ... Phase UV 1 ... Phase VW 2 ... Phase WU i003 Incorrect voltage value (normalized to 16384)
	4 Overvoltage persists for longer than time set in parameter P086 (if this is >0)	-
F008	**Line frequency less than the minimum line frequency acc. to parameter P363** (active in operating states of ≤ o5) This fault message is activated if the line frequency is less than the minimum line frequency (for longer than the "restart time" set in parameter P086). Note: Up to software version 1.7 the threshold for activation of the fault message (minimum line frequency) is 45Hz. Fault value:	
	1 Line frequency < minimum line frequency 4 Line frequency less than the minimum line frequency for longer than set in parameter P086 (if this is >0)	
F009	**Line frequency greater than the maximum line frequency acc. to parameter P364** (active in operating states of ≤ o5) This fault message is activated if the line frequency is greater than the maximum line frequency (for longer than the "restart time" set in parameter P086). Note: Up to software version 1.7 the threshold for activation of the fault message (maximum line frequency) is 65Hz Fault value:	
	1 Line frequency > maximum line frequency 4 Line frequency greater than the maximum line frequency for longer than set in parameter P086 (if >0)	

10.1.2.2 Interface error

F011	**Telegram failure at GSST1** when P780 = 2: **USS telegram failure at G-SST1** (active from the first receipt of a valid protocol in all operating states) After the receipt of the first valid protocol, no further telegrams have been received within the time period set in parameter P787. Possible causes of fault • Cable break • Error in USS master

Fault No.	Description: Cause as a function of fault value (r047.001, r949.001 or r949.009 with acknowledged error)	Description: Further information (r047.002 to r047.016)
F012	**Telegram failure at GSST2** when P790 = 2: **USS telegram failure at G-SST2** (active from the first receipt of a valid protocol in all operating states) After the receipt of the first valid protocol, no further telegrams have been received within the time period set in parameter P797. Possible causes of fault • Cable break • Error in USS master when P790 = 4 or 5 **Peer-to-peer telegram failure at G-SST2** (active in operating states of ≤ o6) After the receipt of the first valid protocol, no further telegrams have been received within the time period set in parameter P797. Possible causes of fault • Break in connecting cable • EMC interference on connecting cable • P797 is set too low	
F013	**Telegram failure at GSST3** when P800 = 2 **USS telegram failure to G-SST3** (active from the first receipt of a valid protocol in all operating states) After the receipt of the first valid protocol, no further telegrams have been received within the time period set in parameter P807. Possible causes of fault • Cable break • Error in USS master when P800 = 4 or 5: **Peer-to-peer telegram failure at G-SST3** (active in operating states of ≤ o6) After the receipt of the first valid protocol, no further telegrams have been received within the time period set in parameter P807. Possible causes of fault • Break in connecting cable • EMC interference on connecting cable • P807 is set too low	
F014	**Telegram failure at paralleling interface** [V2.1 and later] (active when U800 = 1 or 2 from the first receipt of a valid protocol in all operating states) After the receipt of the first valid protocol, no further telegrams have been received within the time period set in parameter U807. Possible fault causes • Interruption in connecting cable • EMC interference on connecting cable • U807 is set too low	
F015	**Telegram failure on one SIMOLINK board** (active when U741 > 0 as soon as the first valid telegram is received) After receipt of one valid telegram, no further valid telegrams have arrived within the period set in parameter U741. Possible causes of fault • Break in connecting cable • Parameter setting change during telegram exchange (for parameters see Section 11 "Configuration of SIMOLINK board) • U741 is set to low Fault value: 1 Telegram failure on 1st SLB 2 Reserved	

Fault No.	Description	
	Cause as a function of fault value (r047.001, r949.001 or r949.009 with acknowledged error)	Further information (r047.002 to r047.016)
F016	**Hardware fault on expansion board EB1** Fault value:	
	1 Fault on first EB1 2 Fault on second EB1	
F017	**Hardware fault on expansion board EB2** Fault value:	
	1 Fault on first EB2 2 Fault on second EB2	
F018	**Short circuit or overloading of binary outputs** (active in all operating states) Possible causes of fault • Short circuit or overload at terminals 46, 48, 50 or 52 and 26 or 34 Fault value:	r047 Index 002 to 016:
	1 Short circuit or overload at binary outputs	i002 Bit 8 = 1: Overload at terminal 46 Bit 9 = 1: Overload at terminal 48 Bit 10 = 1: Overload at terminal 50 Bit 11 = 1: Overload at terminal 52 Bit 12 = 1: Overload at terminal 26 (15 V output) Bit 13 = 1: Overload at terminal 34, 44 or 210 (24 V output)

10.1.2.3 External faults, fault messages from free function blocks

F019	**Fault message from free function block FB286** (active in all operating states) Fault value:
	1 the binector wired via parameter U100 Index.005 is in the state log.”1” 2 the binector wired via parameter U100 Index.006 is in the state log.”1” 3 the binector wired via parameter U100 Index.007 is in the state log.”1” 4 the binector wired via parameter U100 Index.008 is in the state log.”1”
F020	**Fault message from free function block FB287** (active in all operating states) Fault value:
	1 the binector wired via parameter U101 Index.005 is in the state log.”1” 2 the binector wired via parameter U101 Index.006 is in the state log.”1” 3 the binector wired via parameter U101 Index.007 is in the state log.”1” 4 the binector wired via parameter U101 Index.008 is in the state log.”1”
F021	**External fault 1** (active in all operating states) Bit 15 control word 1 was in the log. "0" state for longer than the time set in P360 index 001.
F022	**External fault 2** (active in all operating states) Bit 26 control word 2 was in the log. "0" state for longer than the time set in P360 index 002.
F023	**Ramp-down monitoring, fault message from free function block FB2** (active in all operating states) Fault value:
	1 The travel command has been cancelled but the minimum speed (P370) has not been reached within the period specified in U441. For further details, see the description of the crane control in Section 8, Sheet K15 2 the binector wired via parameter U100 Index.002 is in the state log.”1” 3 the binector wired via parameter U100 Index.003 is in the state log.”1” 4 the binector wired via parameter U100 Index.004 is in the state log.”1”

Fault No.	Description: Cause as a function of fault value (r047.001, r949.001 or r949.009 with acknowledged error)	Description: Further information (r047.002 to r047.016)
F024	**Brake fault, fault message from free function block FB3** (active in all operating states) Fault value:	
	1 A brake fault has been detected. There was no feedback signal for "Brake Open" or "Brake Closed" within the monitoring time (U444). For further details, see the description of the crane control in Section 8, Sheet K16 2 the binector wired via parameter U101 Index.002 is in the state log.”1” 3 the binector wired via parameter U101 Index.003 is in the state log.”1” 4 the binector wired via parameter U101 Index.004 is in the state log.”1”	
F025	**External fault 5** (active in operating states of ≤ o3 if P495=2) A log. “0” signal has been on terminal 211 for more than 10s.	
F026	**External fault 6** (active in operating states of ≤ o6 if P496=2) A log. “1” signal has been on terminal 212 for more than 2s.	
F027	**External fault 7** (active in operating states of <o6 if P497=2) A log. “0” signal has been on terminal 213 for more than 40s.	
F028	**External fault 8** (active in operating states of ≤ o6 if P498=2) A log. “0” signal has been on terminal 214 for more than 10s.	

10.1.2.4 Fault messages from motor sensors

F029	**Motor overtemperature** (active in all operating states) Selection via P493=2 or 3 (temperature sensor at terminals 22 / 23) or P494=2 or 3 (temperature sensor at terminals 204 / 205) <u>When parameter P490.01=1 (KTY84 at terminals 22 / 23) or P490.02=1 (KTY84 at terminals 204 / 205):</u> The fault message is activated if the motor temperature reaches or exceeds the value set in parameter P492. <u>When parameter P490.01=2, 3, 4 or 5 (PTC thermistor at terminals 22 / 23) or P490.02=2, 3, 4 or 5 (PTC thermistor at terminals 204 / 205):</u> The fault message is activated if the motor temperature reaches or exceeds the response value of the selected PTC thermistor. Fault value:	
	1 Fault activation through temperature sensor at terminals 22 / 23 2 Fault activation through temperature sensor at terminals 204 / 205	

10.1.2.5 Drive faults

F031	**Speed controller monitoring** (active in operating states of – –, I, II) The monitor responds when the difference between the connectors selected in P590 and P591 (factory setting: Setpoint/actual value difference of speed controller) exceeds the limit set in parameter P388 for longer than the time set in parameter P390. Possible causes of fault • Control loop interrupted • Incorrect tachometer polarity • Controller is not optimized • P590 or P591 is not correctly parameterized	

Fault No.	Description	
	Cause as a function of fault value (r047.001, r949.001 or r949.009 with acknowledged error)	Further information (r047.002 to r047.016)

10.1.2.6 External faults

F033	**Fault message from free function block FB4** (active in all operating states) Fault value:
	1 the binector wired via parameter U102 Index.001 is in the state log.”1” 2 the binector wired via parameter U102 Index.002 is in the state log.”1” 3 the binector wired via parameter U102 Index.003 is in the state log.”1” 4 the binector wired via parameter U102 Index.004 is in the state log.”1”
F034	**Fault message from free function block FB5** (active in all operating states) Fault value:
	1 the binector wired via parameter U103 Index.001 is in the state log.”1” 2 the binector wired via parameter U103 Index.002 is in the state log.”1” 3 the binector wired via parameter U103 Index.003 is in the state log.”1” 4 the binector wired via parameter U103 Index.004 is in the state log.”1”

10.1.2.7 Drive faults

F035	**Drive blocked** (active in operating states of – –, I, II) The monitoring function responds if the following conditions are fulfilled for longer than the time set in parameter P355: • Positive or negative current limit reached • Stator current is greater than 1% of converter rated DC current • The actual speed value is less than 0.4% of maximum speed Possible causes of fault • Drive blocked
F036	**No stator current can flow** (active in operating states of – –, I, II) This monitoring function responds if the firing angle is at 0° for more than 500 ms and the stator current is less than 1% of the converter rated DC current. Possible causes of fault • Break in motor cable
F037	**I^2t motor monitor has responded** (active in operating states of – –, I, II) This monitoring function responds when an I^2t value is reached which corresponds to the final temperature at 110% of the rated motor current. Possible causes of fault • Parameter P114 is incorrectly set • Drive has been operating for too long at >110% of rated motor current
F038	**Overspeed** (active in operating states of – –, I, II) This fault message is activated if the actual speed value (selected in P595) exceeds the positive (P380) or negative (P381) threshold by 0.5%. Possible causes of fault • Lower current limit has been input • Current-controlled operation • P512, P513 are set too low • Tachometer cable contact fault in operation close to maximum speed

Fault No.	Description	
	Cause as a function of fault value (r047.001, r949.001 or r949.009 with acknowledged error)	Further information (r047.002 to r047.016)
F039	**I^2t power section monitor has responded** (active in operating states of – –, I, II) This monitoring function responds if the calculated I^2t value of the power section reaches the permissible value for the power section concerned (see also P075). Possible causes of fault • Drive has been operating at overload for too long • Parameter P075 is incorrectly set • Parameter P077 is incorrectly set	
F040	**Electronics supply disconnected in active fault status** (active in all operating states) This fault message is activated if the electronics power supply has been disconnected, even though a fault was displayed and not yet acknowledged. Possible causes of fault • Not all fault messages have been acknowledged Fault value:	
	Last active fault message	
F041	**Ambiguous selection of parameter set or ramp-function generator** (active in all operating states) • Check whether ramp-function generator parameter set 1 or 2 or 3 (parameters P303 to P314) is clearly selected. If parameter sets 2 and 3 are selected simultaneously for more than 0.5s, then fault message F041 is displayed. While the parameter set selection is ambiguous, the system continues to apply the last clearly identified ramp-function generator parameters. Possible causes of fault • P676 or P677 (selection of binectors which determine the active function data set in control word 2, bits 16 and 17) is incorrectly set • P637 or P638 (selection of binectors which determine ramp-function generator setting) is incorrectly set Fault value:	
	3 Ambiguous selection of ramp-function generator parameter set	
F044	**A slave connected to the paralleling interface is not operating** [V2.1 and later] (active when U800 = 1 or 2 and U806>10 (master) after receipt of the first valid protocol in operating states – –, I, II) Fault value:	
	1 A fault message is active on a slave 2 A slave is not in operation (e.g. because its enable input is set to "0")	i00x = Status word 1 from slave x
F046	**Analog select input for main setpoint (terminals 4 and 5) faulty** (active in operating states of ≤ o6) This fault message is activated when P700=2 (current input 4 to 20 mA) and an input current of less than 2mA is flowing. Possible causes of fault • Open circuit in supply cable • P700 is incorrectly set	
F047	**Analog select input 1 (terminals 6 and 7) faulty** (active in operating states of ≤ o6) This fault message is activated when P710=2 (current input 4 to 20 mA) and an input current of less than 2mA is flowing. Possible causes of fault • Open circuit in supply cable • P710 is incorrectly set	

Fault No.	Description	
	Cause as a function of fault value (r047.001, r949.001 or r949.009 with acknowledged error)	Further information (r047.002 to r047.016)

10.1.2.8 External faults

F053	**Fault message from free function block FB288** (active in all operating states) Fault value:
	1 the binector wired via parameter U102 Index.005 is in the state log.”1” 2 the binector wired via parameter U102 Index.006 is in the state log.”1” 3 the binector wired via parameter U102 Index.007 is in the state log.”1” 4 the binector wired via parameter U102 Index.008 is in the state log.”1”
F054	**Fault message from free function block FB289** (active in all operating states) Fault value:
	1 the binector wired via parameter U103 Index.005 is in the state log.”1” 2 the binector wired via parameter U103 Index.006 is in the state log.”1” 3 the binector wired via parameter U103 Index.007 is in the state log.”1” 4 the binector wired via parameter U103 Index.008 is in the state log.”1”

10.1.2.9 Start-up faults

F056	**Important parameter is not set** (active in operating states of ≤ o6) This fault message is activated if certain parameters are still set to 0. Fault value:
	1 Speed controller actual value selection in P083 is still set to 0 2 Rated motor current in P100 is still set to 0.0
F058	**Parameter settings are not consistent** (active in operating states of ≤ o6) Inconsistent values have been set in mutually dependent parameters. Fault value:
	4 The first threshold for P gain adaptation of the speed controller set in parameter P556 is higher than the second threshold setting in parameter P559 5 P557 is set to greater than P560 6 P558 is set to greater than P561 7 If P083=1 (analog tachometer), then P746 may not equal 0 (main actual value is not connected) 8 If P083=2 (pulse encoder), then P140 may not equal x0 (no pulse encoder installed) 10 P090 (stabilization time for supply voltage) ≥P086 (time for automatic restart) 11 P090 (stabilization time for supply voltage) ≥P089 (waiting time in state o4 or o5) 12 P445=1 is set (switch-on, shutdown and crawl act as a pushbutton) although no binector is parameterized as a shutdown button (P444=0) 14 Parameter U673 > U674 (this setting is not permitted; see function diagram B152)
F060	**Current total processor utilization (n009.i001, K9990) > 99.0%** (active in all operating statuses) The function blocks of the technology software, option S00 will not be calculated until this fault code has been acknowledged. The current total processor utilization can be reduced by using the function U969 = 4.

Fault No.	Description	
	Cause as a function of fault value (r047.001, r949.001 or r949.009 with acknowledged error)	Further information (r047.002 to r047.016)

10.1.2.10 Internal faults

F062 **Fault in parameter memory**
(active in all operating states)

Software monitoring of correct functioning of the EEPROM module (non-volatile memory) on the A7009 board.
The EEPROM values contains all data which must be protected in the case of a power failure (i.e. parameter values and process data which must remain stored during power failures).

The following are monitored:

- Connection between the A7001 electronics board and the EEPROM on the A7009 backplane wiring assembly
- Whether the parameter values stored on the EEPROM are within the permissible value range
- Whether data are being correctly stored on the EEPROM. For this purpose, values are read and checked for correctness after they are transferred to the module
- Whether the checksum of the non-volatile process data in the EEPROM is correct

Possible causes for all fault types:
Excessive EMC-related interference
(e.g. due to unprotected contactors, unscreened cables, loose screen connections)

Fault value:		r047 Index 002 to 016:
1	Connection to EEPROM is faulty Possible causes of fault • A7001 electronics board is defective • A7009 backplane wiring assembly is defective • Plug-in connection X109 is defective	
2	Parameter value is outside permissible value range Possible causes of fault • “Restore to default value” has never been executed with this software (e.g. after software replacement) • A7009 backplane wiring assembly is defective Possible remedy: • Acknowledge fault, execute “Restore to default value” and start up the drive again	i002 Number of faulty parameter i003 Index of faulty parameter i004 Faulty parameter value
3	Parameter value cannot be stored on EEPROM Possible causes of fault • A7001 electronics board is defective • A7009 backplane wiring assembly is defective • Plug-in connection X109 is defective	i002 Address of fault memory location i003 Faulty value in EEPROM i004 Correct parameter value
11	Checksum of non-volatile data (part 1) is not correct	i002 Calculated checksum i003 Checksum found in EEPROM
12	Checksum of non-volatile data (part 2) is not correct	
13	Checksum of non-volatile data (part 3) is not correct	
20	Checksum of configuring table of parameter values is not correct Possible causes of fault • Defective EEPROM • “Restore to default value” has never been executed with this software (e.g. after software replacement) Possible remedy: • Acknowledge fault, execute “Restore to default value” and start up the drive again! Check interference suppression measures and improve if necessary. In the case of fault value 20, the factory setting is restored automatically	

Fault No.	Description: Cause as a function of fault value (r047.001, r949.001 or r949.009 with acknowledged error)	Description: Further information (r047.002 to r047.016)
F063	**Errors in compensation data of analog inputs and outputs** (active in all operating states) This function monitors whether the factory-set compensation data for the analog inputs and outputs are plausible Possible fault cause: • Defective A7001 or A7006 electronics board	
	Fault value:	r047 Index 002 to 016:
	11 Incorrect number of words in compensation values for analog inputs and outputs of A7001	i002 Incorrect number of words
	12 Checksum error in compensation values for analog inputs and outputs of A7001	i002 Calculated checksum i003 Errored checksum
	13 Incorrect value among compensation values for analog inputs and outputs of A7001	i002 Incorrect value
	23 Incorrect value among compensation values for analog inputs and outputs of A7006	i002 Incorrect value
F064	**Watchdog timer has initiated a reset** (active in all operating states) An internal microprocessor hardware counter monitors whether the program for calculating the firing pulses runs at least once every 14 ms (program is executed on average every 2.7 to 3.3 ms). If this is not the case, the counter initiates a reset. F064 is then output. Possible causes of fault • A7001 electronics board is defective • Excessive EMC-related interference (e.g. due to unprotected contactors, unscreened cables, loose screen connections)	
F065	**Illegal microprocessor status** (active in all operating states) An internal microprocessor hardware function monitors the microprocessor for illegal operating states. Possible causes of fault • A7001 electronics board is defective • Excessive EMC-related interference (e.g. due to unprotected contactors, unscreened cables, loose screen connections)	
F067	**Converter cooling faulty** (active in operating states of ≤ o13) The heatsink temperature monitoring function is activated 6s after connection of the electronics supply. (The current heat sink temperature is indicated at parameter r013 and on connector K050) Fault value:	r047 Index 002 to 016:
	1 Heatsink temperature > permissible heatsink temperature depending on the MLFB and the Z-Option (e.g. Z=H78)	i002 Measured heatsink temperature (16384 .. 100°C)
	2 Heatsink temperature sensor is defective	i003 Measured ADC value
	3 Converter fan is defective	
F068	**Analog measuring channel faulty (main setpoint, main actual value or analog select input)** (active in all operating states) Hardware monitoring of measuring circuits Possible causes of fault • A7001 module defective • Measuring circuit saturated (input voltage at terminals 4 and 5 or 6 and 7 higher than approx. 11.3V) Fault value:	
	1 Measuring channel for main setpoint / analog select input 1 faulty (terminals 4 and 5) 2 Measuring channel for main actual value faulty (terminals 103 and 104) 3 Measuring channel for analog select input 1 faulty (terminals 6 and 7)	

Fault No.	Description: Cause as a function of fault value (r047.001, r949.001 or r949.009 with acknowledged error)	Description: Further information (r047.002 to r047.016)
F069	**MLFB data are faulty** (active in all operating states) Possible causes of fault • Excessive EMC-related interference (e.g. due to unprotected contactors, unscreened cables, loose screen connections) • A7009 backplane wiring assembly is defective Fault value:	r047 Index 002 to 016:
	1 MLFB code number (r070) = MLFB code number (r070) is illegal	i002 Incorrect MLFB code number
	2 MLFB data checksum error	-
	3 Works number checksum error	-
	4 Number of words of MLFB data is incorrect	-

10.1.2.11 Communication errors with supplementary boards

F070	**SCB1: Serious initialization error** (active in all operating states) SCB1 and SCI cannot power up correctly (see diagnostic parameter n697 for details) Fault value:	
	12 No connection to slave 1 22 No connection to slave 2	
F073	**SCB1: Current below 4mA minimum value at analog input1 of slave 1** (active in all operating states) The cause of the fault may be a cable break	
F074	**SCB1: Current below 4mA minimum value at analog input2 of slave 1** (active in all operating states) The cause of the fault may be a cable break	
F075	**SCB1: Current below 4mA minimum value at analog input3 of slave 1** (active in all operating states) The cause of the fault may be a cable break	
F076	**SCB1: Current below 4mA minimum value at analog input1 of slave 2** (active in all operating states) The cause of the fault may be a cable break	
F077	**SCB1: Current below 4mA minimum value at analog input2 of slave 2** (active in all operating states) The cause of the fault may be a cable break	
F078	**SCB1: Current below 4mA minimum value at analog input3 of slave 2** (active in all operating states) The cause of the fault may be a cable break	
F079	**SCB1: Telegram failure** (active in all operating states) Check function of SCB1 (activity LEDs) and connection to SCI slaves (fiber optics)	
F080	**Error in initialization of a CB/TB board** Possible causes for fault values 1 and 6: • CB/TB board is defective • CB/TB board is not correctly inserted • CB/TB board is taking too long to run up (e.g. due to very complex TB board configuration) Fault value:	r047 Index 002 to 016:
	1 The "Heartbeat counter" of the CB/TB has not started to count within 20 s	i015 Code number of board: 1 TB or 1st CB 2 2nd CB
	2 The product version of the installed CT/TB board is not compatible with the SIMOTRAS HD converter	i002 Code number of slot containing incompatible board: 2 Slot D 3 Slot E 4 Slot F 5 Slot G 6 CB when configuration includes TB

Fault No.	Description: Cause as a function of fault value (r047.001, r949.001 or r949.009 with acknowledged error)	Description: Further information (r047.002 to r047.016)
	5 Parameters P918, U711 to U721 are not correctly set or not accepted after a change by means of U710 = 0 setting. (The meanings of these parameters are defined in the manual for the relevant CB board, see also function diagrams, Section 8, Sheets Z110 and Z111)	i015 Code number of board: 1 TB or 1st CB 2 2nd CB
	6 The initialization run for a CB/TB board has not been completed within 40 s	i015 Code number of board: 1 TB or 1st CB 2 2nd CB
F081	**CB/TB heartbeat error** CB/TB has not incremented the monitoring counter for a period of 800 ms Possible causes of fault • CB/TB board is defective • CB/TB board is not correctly inserted	i015 Code number of board: 1 TB or 1st CB 2 2nd CB
F082	**CB/TB message timeout or error in data exchange** Possible causes of fault • CB/TB PZD message timeout (with fault value 10) • Excessive EMC-related interference (e.g. due to unprotected contactors, unscreened cables, loose screen connections) • CB/TB board is defective • CB/TB board is not correctly inserted	
	Fault value:	r047 Index 002 to 016:
	1 Fault in alarm channel from CB to basic unit	i015 Code number of board: 1 TB or 1st CB 2 2nd CB
	2 Fault in alarm channel from TB to basic unit	
	3 Fault in fault channel from TB to basic unit	
	5 Fault in parameter job channel from CB to basic unit	i015 Code number of board: 1 TB or 1st CB 2 2nd CB
	6 Fault in parameter response channel from basic unit to CB	i015 Code number of board: 1 1. TB or 1st CB 2 2nd CB
	7 Fault in parameter job channel from TB to basic unit	
	8 Fault in parameter response channel from basic unit to TB	
	10 CB/TB process data failure (message timeout period set in U722)	i015 Code number of board: 1 TB or 1st CB 2 2nd CB
	11 Fault in parameter job channel from PMU to TB	
	12 Fault in parameter response channel from TB to PMU	
	15 Fault in setpoint channel from CB/TB to basic unit	i015 Code number of board: 1 TB or 1st CB 2 2nd CB
	16 Fault in actual value channel from basic unit to CB/TB	i015 Code number of board: 1 TB or 1st CB 2 2nd CB

10.1.2.12 Fault messages from supplementary boards

F101 to F147	This group of fault messages is activated by supplementary boards Please refer to the operating manual of the relevant supplementary board for explanation of the fault messages and fault values

10.2 Alarm messages

Alarm message display:

On the PMU: A (Alarm) and a three-digit number. The red LED (Fault) flashes.
On the OP1S: On bottom line of operational display: The red LED (Fault) flashes.

An alarm message cannot be acknowledged, but disappears automatically when the cause has been eliminated.

Several alarm messages can be active at the same time, these are then displayed in succession.

Many alarm messages can only occur in certain operating states.
(see list of alarm messages)

The system responses to an alarm are as follows:

- Alarm message is displayed on the operator panel (PMU, OP1S)
- B0114 (= status word 1, bit 7) is set and B0115 is cancelled
  (see also special alarm bits in status word 2, e.g. for an external alarm, overload, etc.)
- The corresponding bit in one of the alarm words r953 (K9801) to r960 (K9808) is set

Alarm No.	Description
A015	**Simolink start** (active in all operating states) Although the board has been initialized, it cannot yet exchange telegrams (parameters have not yet been correctly configured on all nodes or the boards have not yet been linked via fiber optics to form a closed ring).
A018	**Short circuit at binary outputs** (active in all operating states) Hardware monitoring function to check for short circuit at one of the binary select outputs (see also F018 and r011).
A019	**Alarm message from free function block FB256** (active in all operating states) The binector wired via parameter U104 Index.002 is in the state log.”1”
A020	**Alarm message from free function block FB257** (active in all operating states) The binector wired via parameter U105 Index.002 is in the state log.”1”
A021	**External alarm 1** (active in all operating states) Bit 28 control word 2 was in the log. "0" state for longer than the time set in P360 index 003.
A022	**External alarm 2** (active in all operating states) Bit 29 in control word 2 was in the log. "0" state for longer than the time set in P360 index 004.
A023	**Electrical stop / overtemperature** (active in all operating states) The binector wired via parameter U104 Index.001 is in the state log.”1”. See crane control Section 8, Sheet K15
A024	**Alarm message from free function block FB7** (active in all operating states) The binector wired via parameter U105 Index.001 is in the state log.”1”
A025	**External fault 5** (active in all operating states ≤ o3 if P495=1) A log. “0” signal has been on terminal 211 for more than 10s.
A026	**External fault 6** (active in all operating states ≤ o6 if P496=1) A log. “1” signal has been on terminal 212 for more than 2s.

Alarm No.	Description
A027	**External fault 7** (active in all operating states < o6 if P497=1) A log. “0” signal has been on terminal 213 for more than 40s.
A028	**External fault 8** (active in all operating states ≤ o6 if P498=1) A log. “0” signal has been on terminal 214 for more than 10s.
A029	**Motor overtemperature** (active in all operating states) Selection via P493=1 or 3 (thermostat at terminals 22 / 23) or P494=1 or 3 (thermostat at terminals 204 / 205) When parameter P490.01=1 (KTY84 at terminals 22 / 23) or P490.02=1 (KTY84 at terminals 204 / 205): The alarm is activated if the motor temperature reaches or exceeds the values set in parameter P492. When parameter P490.01=2, 3, 4 or 5 (PTC thermistor at terminals 22 / 23) or P490.02=2, 3, 4 or 5 (PTC thermistor at terminals 204 / 205): The alarm is activated if the motor temperature reaches or exceeds the trip value of the selected PTC.
A031	**Speed controller monitoring** (active in operating states of – –, I, II) The monitor responds when the difference between the connectors selected in P590 and P591 (factory setting: Setpoint/actual value difference of speed controller) exceeds the limit set in parameter P388 for longer than the time set in parameter P390. Possible causes of fault • Control loop interrupted • Controller is not optimized • P590 or P591 is not correctly parameterized
A033	**Alarm message from free function block FB8** (active in all operating states) The binector connected via parameter U106 Index.001 is in the log. "1" state
A034	**Alarm message from free function block FB9** (active in all operating states) The binector connected via parameter U107 Index.001 is in the log. "1" state
A035	**Drive blocked** (active in operating states of – –, I, II) The monitoring function responds if the following conditions are fulfilled for longer than the time set in parameter P355: • Positive or negative current limit reached • Stator current is greater than 1% of converter rated DC current • The actual speed value is less than 0.4% of maximum speed
A036	**No stator current can flow** (active in operating states of – –, I, II) This monitoring function responds if the firing angle is at 0° for more than 500 ms and the stator current is less than 1% of the converter rated DC current.
A037	**I^2t motor monitor has responded** (active in operating states of – –, I, II) The alarm is activated when the calculated I^2t value of the motor reaches the value which corresponds to the final temperature at 100% of permissible continuous motor current (= P113*P100).
A038	**Overspeed** (active in operating states of – –, I, II) The monitoring function responds if the actual speed value (selected in P595) exceeds the positive (P512) or negative (P513) threshold by 0.5%. Possible causes • Lower current limit has been input • Current-controlled operation • P512, P513 are set too low • Tachometer cable contact fault in operation close to maximum speed

Alarm No.	Description
A039	**I^2t value of power section too high** (active in all operating states) This alarm is activated if the permissible I^2t value for the relevant power section is reached. At the same time, the current limit is set to P077 * 100% of the converter rated current. This limit is not cancelled again until the setpoint drops below 100% of the converter rated current. See also Fault F039 and Parameter P075.
A044	**An alarm is active on one slave connected to the paralleling interface** [V2.1 and later] (active in all operating states)
A046	**Analog select input for main setpoint (terminals 4 and 5) faulty** (active in operating states of ≤ o6) This alarm is activated when P700=2 (current input 4 to 20 mA) and the input current is less than 3mA.
A047	**Analog select input 1 (terminals 6 and 7) faulty** (active in operating states of ≤ o6) This alarm is activated when P710=2 (current input 4 to 20 mA) and the input current is less than 3mA.
A049	**SCB1: No SCI slave connected** (active in all operating states)
A050	**SCB1: Not all required SCI slaves are available** (active in all operating states) The SCI slave required to perform the parameterized functions is not available
A053	**Alarm message from free function block FB258** (active in all operating states) The binector connected via parameter U106 Index.002 is in the log. "1" state
A054	**Alarm message from free function block FB259** (active in all operating states) The binector connected via parameter U107 Index.002 is in the log. "1" state
A060	**Current total processor utilization (n009.i001, K9990) > 95.5%** (active in all operating states)
A067	**Converter cooling faulty** (active in all operating states) The heat sink temperature is higher than the permissible value - depending on the MLFB and the Z-Option (e.g. Z=H78) The monitoring function is activated 6s after the electronics supply is connected. (The current heat sink temperature is indicated at parameter r013 and on connector K050)
A081 to **A088**	**CB alarm of 1st CB** (active in all operating states ≤ o11) The meaning of these alarms depends on the type of board used. For further information, refer to Section 7.10, Start-Up of Optional Supplementary Boards, in the relevant board description.
A089 to **A096**	**CB alarm of 2nd CB** (active in all operating states ≤ o11) The meaning of these alarms depends on the type of board used. For further information, refer to Section 7.10, Start-Up of Optional Supplementary Boards, in the relevant board description.
A097 to **A128**	**TB alarms** (active in operating states ≤ o11) For more information about TECH BOARD alarms, please refer to Operating Instructions or Configuring Guide of the relevant board.

11 Parameter list

Overview

Range of parameter numbers	Function
r000	**Operating display**
r001 - P050	**General visualization parameters**
P051- r059	**Access authorization levels**
r060 - r065	**Definition of SIMOTRAS converter**
P068 - P078	**Definition of SIMOTRAS power section**
P080 - P096	**Setting values for converter control**
P100 - P114	**Definition of motor**
P140 - P147	**Definition of pulse encoder, speed sensing using pulse encoder**
P152 - P165	**Closed-loop current control, auto-reversing stage, gating unit**
P171 - P191	**Current limitation, torque limitation**
P200 - P234	**Speed controller** (further parameters for the speed controller P550 - P563)
P295 - P319	**Ramp-function generator**
P320 - P323	**Setpoint processing**
P330	**Ramp-function generator**
P351 - P364	**Setting values for monitoring functions and limits**
P370 - P390	**Setting values for limit-value monitors**
P401 - P416	**Settable fixed values**
P421 - P428	**Fixed control bits**
P430 - P445	**Digital setpoint input (fixed setpoint, inching and crawling setpoints)**
P450 - P453	**Position sensing with pulse encoder**
P455 - P458	**Connector selector switches**
P460 - P473	**Motorized potentiometer**
P480 - P485	**Oscillation**
P490 - P494	**Temperature sensor inputs**
P495 - P498	**Binary inputs**
P500 - P503	**Configuring of torque shell input**
P509 - P515	**Speed limiting controller**
P519 - P530	**Friction compensation**
P540 - P546	**Compensation of moment of inertia (dv/dt injection)**
P550 - P563	**Speed controller** (further parameters for the speed controller P200 - P234)
P590 - P597	**Input quantities for signals**
P600 - P647	**Configuring of closed-loop control**
P648 - P691	**Control word, status word**
P694 - P698	**Further configuring measures**
P700 - P746	**Analog inputs (main actual value, main setpoint, selectable inputs)**
P749 - P769	**Analog outputs**
P770 - P778	**Binary outputs**
P780 - P819	**Configuration of serial interfaces on basic converter**
P820 - P821	**Deactivation of monitoring functions**
r824 - r829	**Compensation values**
P831 - P899	**Parameters for DriveMonitor and OP1S**
P918 - P927	**Profile parameters**
r947 - P952	**Fault memory**
r953 - r960	**Visualization parameters: Alarms**
r964	**Device identification**
r967 - r968	**Visualization parameters: Control and status word**
P970 - r999	**Resetting and storing parameters, list of existing and modified P and r parameters**

Range of parameter numbers	Function
U005 - U007	Password protection, key/lock mechanism
n009	Processor utilization
n024 - U098	Miscellaneous
U116 - U118	Binector / connector converter for the serial interfaces
n600 - U629	Control inputs, control outputs, setpoint reduction
U630 - U649	Rotor stage stepping
U651 - U657	Start pulse, speed controller
U660 - U668	Evaluation of a four-stage master switch
U690 - n699	Configuration of SCB1 with SCI
U710 - n739	Configuration of supplementary boards in board locations 2 and 3
U740 - U753	Configuration of the SIMOLINK board
U755 - n770	Configuration of the EB1 expansion board
U773 - n788	Configuration of the EB2 expansion board
U790 - U796	Configuration of the SBP pulse encoder board
U800 - n813	Configuration of paralleling interface
U845 - U909	Parameters for DriveMonitor
U910	Slot deactivation
U911 - n949	Parameters for DriveMonitor
n953 - n959	Parameters for DriveMonitor
U979	Parameter access for experts
n980 - n999	List of existing and modified U and n parameters

Parameters for technology software in the basic converter, S00 option ("freely assignable function blocks")

Range of parameter numbers	Function
n010 - n023	Displays
U099	Settable fixed values
U100 - U107	Triggering of faults and alarms
U110 - U115	Connector/binector converters, binector/connector converters
U120 - U171	Mathematical functions
U172 - U173	Processing of connectors (averager)
U175 - U218	Limiter, limit-value monitors
U220 - U259	Processing of connectors
U260 - U299	Integrators, DT1 elements, characteristics, dead zones, setpoint branching
U300 - U303	Simple ramp-function generator
U310 - U313	Multiplexer
n314 - U317	Counter
U318 - U411	Logic functions
U415 - U474	Storage elements, timers and binary signal selector switches
U480 - U512	Technology controller
U515 - U523	Velocity/speed calculators
U525 - U529	Variable moment of inertia
U530 - U545	PI controller
U550 - U554	Closed-loop control elements
U670 - U677	Position/positional deviation acquisition
U680 - U684	Root extractor
U950 - U952	Sampling times
U960 - U969	Altering the processing sequence of function blocks

Overview of abbreviations

Example:

PNU	Description	Value range [Unit] Steps	No. indices Factory setting Type	See Change (Access / Status)
P520 * **1)** FDS **2)** **8)** **9)** (G153) **10)**	**Friction at 0% speed** Setting as % of converter rated DC current or converter rated torque	0.0 to 100.0 [%] 0.1% **4)**	Ind: 4 FS=0.0 **5)** Type: O2 **3)**	P052 = 3 P051 ≥ 20 Online **6)**

1) An * under the parameter number means that the parameter requires confirmation, i.e. the altered value does not take effect until the P key is pressed.

2) Abbreviation indicating that the parameter belongs to a data set (refers only to indexed parameters) (see Section 9.11 “Switch over parameter sets“)

FDS Parameter belongs to the function data set (see Section 9.1, subsection "Data sets")
BDS Parameter belongs to the BICO data set (see Section 9.1, subsection "Data sets")

3) Specification of parameter type
O2 Unsigned 16-bit value
I2 Signed 16-bit value
O4 Unsigned 32-bit value
I4 Signed 32-bit value
V2 Bit-coded quantity
L2 Nibble-coded quantity

4) Setting steps for access via PKW mechanism

5) Factory setting

6) Minimum setting required (P052) to allow display of the relevant parameter
Minimum access level required (P051) to allow modification of the relevant parameter
Online: The parameter can be changed in all converter operating states
Offline: The parameter can only be changed in converter operating states of ≥ o1.0

8)
S00 Parameter belongs to the technology software in the basic converter, S00 option

9) The "OP parameter number" (i.e. the number to be entered via the OP1S operator panel) is specified in brackets in the "PNU" column for all parameters which are not "P parameters" or "r parameters": e.g. (2010) under n010 or (2100) under U100.

10) The parameter is shown in the specified function diagram in Section 8 (here G153).

PNU	Description	Value range [Unit] Steps	No. indices Factory setting Type	See Change (Access / Status)

11.1 Operating status display

r000	**Operating status display** **Status display, fault and alarm messages** **Torque direction M0, MI or MII (=RUN)** **- -** No torque direction active **I** Torque direction I active (MI) **I I** Torque direction II active (MII) **o1 Waiting for operating enable (=READY)** o1.0 Brake release delay time running. o1.1 Waiting for operating enable at terminal 38. o1.2 Waiting for operating enable via binector (acc. to selection in P661) or control word, bit 3 (acc. to selection in P648) o1.3 Inching command cancellation delay time running. o1.4 Reserved o1.5 Reserved o1.6 Reserved **o2 Wait for setpoint > P091.002** o2.0 If |n-set| (|K0193|) and |n-actual| (K0166) are less than P091.002, the firing pulses are disabled and the drive goes into state o2.0. [SW 2.0 and later] **o3 Test phase** o3.0 Reserved o3.1 Waiting for completion of line symmetry check. o3.2 Waiting for a contactor in the motor circuit to pick up o3.3 Waiting for "Main contactor checkback" (control word 2 bit 31, see P691) [SW 1.8 and later] **o4 Waiting for voltage (motor)** o4.0 Waiting for voltage at power terminals U1, V1, W1 The voltage and frequency must be within the range specified with parameters P351, P352, P353, P363 and P364. See also P078.001. **NOTE** The system dwells in state o4 for no more than a time set in parameter P089. The appropriate fault message is output if the corresponding conditions are still not fulfilled at the end of this period. **o5 Reserved** **o6 Wait status before the line contactor is closed** o6.0 Waiting for auxiliaries to be switched on (delay in P093) o6.1 Waiting for a setpoint ≤ P091 to be applied to the ramp-function generator input (K0193) **o7 Waiting for switch-on command (=READY TO SWITCH ON)** o7.0 Waiting for switch-on command via terminal 37. o7.1 Waiting for switch-on command via binector (acc. to selection in P654) or control word, bit 0 (acc. to selection in P648). o7.2 Waiting for internal shutdown to be cancelled through input of an external shutdown command o7.3 Waiting for completion of "Restore factory settings" operation. o7.4 Reserved o7.5 Wait for completion of "Read in parameter set" operation. o7.6 Wait for completion of "Load MLFB" operation. (performed at factory) o7.9 reserved for firmware download for optional supplementary modules [SW 2.0 and later]		Ind: None Type: O2	P052 = 3

PNU	Description	Value range [Unit] Steps	No. indices Factory setting Type	See Change (Access / Status)
	o8 Waiting for acknowledgement of starting lockout o8.0 Waiting for acknowledgement of starting lockout through input of SHUTDOWN command (OFF1). o8.1 Reserved **o9 Fast stop (OFF3)** o9.0 Fast stop has been input via binector (acc. to selection in P658) or control word, bit 2 (acc. to selection in P648). o9.1 Fast stop has been input via binector (acc. to selection in P659). o9.2 Fast stop has been input via binector (acc. to selection in P660). o9.3 Fast stop is stored internally (memory can be reset by cancelling FAST STOP command and entering SHUTDOWN). **o10 Voltage disconnection (OFF2)** o10.0 Voltage disconnection has been input via binector (acc. to selection in P655) or control word, bit 1 (acc. to selection in P648). o10.1 Voltage disconnection has been input via binector (acc. to selection in P656). o10.2 Voltage disconnection has been input via binector (acc. to selection in P657). o10.3 Reserved o10.4 Waiting for receipt of a valid telegram on G-SST1 (only if telegram failure time monitoring is set with P787 ≠ 0) o10.5 Waiting for receipt of a valid telegram on G-SST2 (only if telegram failure time monitoring is set with P797 ≠ 0) o10.6 Waiting for receipt of a valid telegram on G-SST3 (only if telegram failure time monitoring is set with P807 ≠ 0) **o11** Fault o11.0 = Fxxx Fault message is displayed, red LED lights up. **o12 Electronics initialization in progress** o12.1 Basic converter electronics initialization in progress o12.2 Supplementary board is sought in module plug-in location 2 o12.3 Supplementary board is sought in module plug-in location 3 o12.9 Restructuring of parameters in non-volatile storage after software update (takes approx. 15s) **o13 Software update in progress** o13.0 Waiting for arrival of start command from HEXLOAD PC routine (press the DOWN key to abort this status and start a RESET) o13.1 Deletion of Flash EPROM in progress xxxxx Display of address currently being programmed o13.2 The Flash EPROM has been successfully programmed (a RESET is performed automatically after approx. 1 second) o13.3 Programming of the Flash EPROM has failed (press UP key to return to operating state o13.0) **o14 Loading of boot sector in progress** (this operation is performed only in factory) **o15 Electronics not connected to voltage** Dark display: Waiting for voltage at terminals 5U1, 5W1 (electronics supply voltage).			

PNU	Description	Value range [Unit] Steps	No. indices Factory setting Type	See Change (Access / Status)

11.2 General visualization parameters

r001 (G113)	**Display of terminals 4 and 5 (main setpoint)**	-200.0 to 199.99 [%] 0.01%	Ind: None Type: I2	P052 = 3
r002 (G113)	**Analog input, terminals 103 and 104 (main actual value)**	-200.00 to 199.99 [%] 0.01%	Ind: None Type: I2	P052 = 3
r003 (G113)	**Analog input, terminals 6 and 7 (selectable input 1)**	-200.00 to 199.99 [%] 0.01%	Ind: None Type: I2	P052 = 3
r004 (G114)	**Analog input, terminals 8 and 9 (selectable input 2)**	-200.00 to 199.99 [%] 0.01%	Ind: None Type: I2	P052 = 3
r005 (G114)	**Analog input, terminals 10 and 11 (selectable input 3)**	-200.00 to 199.99 [%] 0.01%	Ind: None Type: I2	P052 = 3
r006 (G115)	**Analog output, terminals 14 and 15** Display of output value before normalization and offset	-200.00 to 199.99 [%] 0.01%	Ind: None Type: I2	P052 = 3
r007 (G115)	**Analog output, terminals 16 and 17** Display of output value before normalization and offset	-200.00 to 199.99 [%] 0.01%	Ind: None Type: I2	P052 = 3
r008 (G116)	**Analog output, terminals 18 and 19** Display of output value before normalization and offset	-200.00 to 199.99 [%] 0.01%	Ind: None Type: I2	P052 = 3
r009 (G116)	**Analog output, terminals 20 and 21** Display of output value before normalization and offset	-200.00 to 199.99 [%] 0.01%	Ind: None Type: I2	P052 = 3
r010 (G110)	**Display of status of binary inputs** Representation on operator panel (PMU): 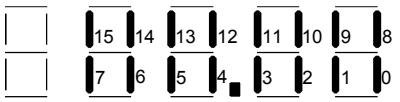 Segment ON: Corresponding terminal is activated (HIGH level is applied) Segment OFF: Corresponding terminal is not activated (LOW level is applied) Segment or bit 0 ..... Terminal 36 1 ..... Terminal 37 (switch-on) 2 ..... Terminal 38 (operating enable) 3 ..... Terminal 39 4 ..... Terminal 40 5 ..... Terminal 41 6 ..... Terminal 42 7 ..... Terminal 43 8 ..... Terminal 211 9 ..... Terminal 212 10 ..... Terminal 213 11 ..... Terminal 214 12 ..... (not used) 13 ..... (not used) 14 ..... (not used) 15 ..... (not used)		Ind: None Type: V2	P052 = 3

PNU	Description	Value range [Unit] Steps	No. indices Factory setting Type	See Change (Access / Status)
r011 (G112)	**Display of status of binary outputs** Representation on operator panel (PMU): 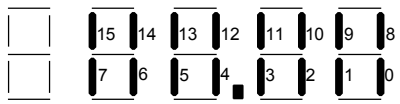 Segment ON: Corresponding terminal is activated (HIGH level is applied) or overloaded or short-circuited Segment OFF: Corresponding terminal is not activated (LOW level is applied) or not overloaded or not short-circuited Display of status of binary output terminals: Segment or bit 0 ..... Terminal 46 1 ..... Terminal 48 2 ..... Terminal 50 3 ..... Terminal 52 7 ..... Terminal 109/110 Display of overloading of binary outputs: Segment or bit 8 .... Terminal 46 9 ..... Terminal 48 10 ... Terminal 50 11 ... Terminal 52 12 ... Terminal 26 (15V output) 13 ... Terminal 34, 44 or 210 (24V output)		Ind: None Type: V2	P052 = 3
r012 (G185)	**Motor temperature** Display of motor temperature when a KTY 84 temperature sensor is connected (P490.x=1). A value of "0" is always output in r012 when a PTC thermistor or no temperature sensor is installed. i001: Motor temperature 1 (sensor at terminals 22 / 23) i002: Motor temperature 2 (sensor at terminals 204 / 205)	-58 to +^318 [°C] 1°C	Ind: 2 Type: I2	P052 = 3
r013	**Heatsink temperature** Display of heatsink temperature	-47 to +200 [°C] 1°C	Ind: None Type: I2	P052 = 3
r014	**Temperature rise** i001: Calculated motor temperature rise (see P114) i002: Calculated thyristor temperature rise (see P075)	0.0 to 200.0 [%] 0.1%	Ind: 2 Type: O2	P052 = 3
r015	**Display of line voltage** (generated as arithmetic rectification average, RMS value display applies to sinusoidal voltage, average over 3 line-to-line voltages)	0.0 to 2800.0 [V] 0.0V	Ind: None Type: O2	P052 = 3
r017	**Display of line frequency**	0.00 to 120.00 [Hz] 0.01Hz	Ind: None Type: O2	P052 = 3
r018 (G163)	**Display of firing angle**	0.00 to 180.00 [degrees] 0.01 degrees	Ind: None Type: O2	P052 = 3
r019 (G162)	**Display of actual motor current value** The internal actual motor current value is displayed (arithmetic average between 6 current peaks)	-400.0 to 400.0 [% of P100] 0.1% of P100	Ind: None Type: I2	P052 = 3
r020 (G162)	**Display of the absolute value of motor current setpoint**	0.0 to 300.0 [% of P100] 0.1% of P100	Ind: None Type: I2	P052 = 3
r021 (G160)	**Display of torque setpoint after torque limitation** Steps: 1 ≙ 0.1% of rated motor torque	-400.0 to 400.0 [%] 0.1% (see column on left)	Ind: None Type: I2	P052 = 3
r022 (G160)	**Display of torque setpoint before torque limitation** Steps: 1 ≙ 0.1% of rated motor torque	-400.0 to 400.0 [%] 0.1%(see column on left)	Ind: None Type: I2	P052 = 3

PNU	Description	Value range [Unit] Steps	No. indices Factory setting Type	See Change (Access / Status)
r023 (G152)	**Display of speed controller setpoint/actual value deviation**	-200.00 to 199.99 [%] 0.01%	Ind: None Type: I2	P052 = 3
r024 (G145)	**Display of actual speed value from pulse encoder**	-200.00 to 199.99 [%] 0.01%	Ind: None Type: I2	P052 = 3
r025 (G151)	**Display of actual speed controller value**	-200.00 to 199.99 [%] 0.01%	Ind: None Type: I2	P052 = 3
r026 (G152)	**Display of speed controller setpoint**	-200.00 to 199.99 [%] 0.01%	Ind: None Type: I2	P052 = 3
r027 (G136)	**Display of ramp-function generator output**	-200.00 to 199.99 [%] 0.01%	Ind: None Type: I2	P052 = 3
r028 (G136)	**Display of ramp-function generator input**	-200.00 to 199.99 [%] 0.01%	Ind: None Type: I2	P052 = 3
r029 (G135)	**Display of main setpoint before limitation**	-200.00 to 199.99 [%] 0.01%	Ind: None Type: I2	P052 = 3
r040	**Display of limitations:** Representation on operator panel (PMU): 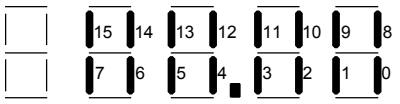 Segment ON: Corresponding limitation is reached Segment OFF: Corresponding limitation is not reached Segment or bit 0 ..... Reserved 1 ..... Reserved 2 ..... α_W limit reached 3 ..... Negative current limit reached (K0132) 4 ..... Negative maximum speed reached (P513) Speed limiting controller responds (B0201) 5 ..... Negative torque limit reached (B0203) 6 ..... Neg. limitation at ramp generator output reached . (K0182) 7 ..... Neg. limitation at ramp generator input reached . (K0197) 8 ..... Reserved 9 ..... Reserved 10 ..... α_G limit reached 11 ..... Positive current limit reached (K0131) 12 ..... Positive maximum speed reached (P512) Speed limiting controller responds (B0201) 13 ..... Positive torque limit reached (B0202) 14 ..... Pos. limitation at ramp generator output reached .(K0181) 15 ..... Pos. limitation at ramp generator input reached .(K0196) Note: This parameter has the same bit assignments as connector K0810.		Ind: None Type: V2	P052 = 3

Connector and binector displays				
r041 (G121)	**High-resolution connector display:** i001: Display of connector selected in P042.01 i002: Display of connector selected in P042.02 The display value is filtered with a time constant of 300ms (see Section 8, Sheet G121)	-200.00 to 199.99 [%] 0.01%	Ind: 2 Type: I2	P052 = 3
P042 * (G121)	**High-resolution connector display:** i001: Selection of connector to be displayed in r041.01 i002: Selection of connector to be displayed in r041.02 The display value is filtered with a time constant of 300ms (see Section 8, Sheet G121)	All connector numbers 1	Ind: 2 FS=0 Type: L2	P052 = 3 P051 = 40 Online

PNU	Description	Value range [Unit] Steps	No. indices Factory setting Type	See Change (Access / Status)
r043 (G121)	**Connector display:** i001: Display of connector selected in P044.01 i002: Display of connector selected in P044.02 i003: Display of connector selected in P044.03 i004: Display of connector selected in P044.04 i005: Display of connector selected in P044.05 i006: Display of connector selected in P044.06 i007: Display of connector selected in P044.07	-200.0 to 199.9 [%] 0.1%	Ind: 7 Type: I2	P052 = 3
P044 ***** (G121)	**Connector display:** i001: Selection of connector displayed in r043.01 i002: Selection of connector displayed in r043.02 i003: Selection of connector displayed in r043.03 i004: Selection of connector displayed in r043.04 i005: Selection of connector displayed in r043.05 i006: Selection of connector displayed in r043.06 i007: Selection of connector displayed in r043.07	All connector numbers 1	Ind: 7 FS=0 Type: L2	P052 = 3 P051 = 40 Online
r045 (G121)	**Binector display:** i001: Display of binector selected in P046.01 i002: Display of binector selected in P046.02 i003: Display of binector selected in P046.03 i004: Display of binector selected in P046.04	0 to 1	Ind: 4 Type: O2	P052 = 3
P046 ***** (G121)	**Binector display:** i001: Selection of binector displayed in r045.01 i002: Selection of binector displayed in r045.02 i003: Selection of binector displayed in r045.03 i004: Selection of binector displayed in r045.04	All binector numbers 1	Ind: 4 FS=0 Type: L2	P052 = 3 P051 = 40 Online

r047	**Display of fault diagnostic memory** Provides more detailed information about the cause of a fault after activation of a fault message (see Section 10). i001 Word 1 (fault value) i002 Word 2 **...** i016 Word 16 (fault number)	0 to 65535 1	Ind: 16 Type: O2	P052 = 3
r048 (G189)	**Hours run** Display of time (hours) in which drive has been operating in states I, II or - -. All times of ≥ approx. 0.1 s are included in the count.	0 to 65535 [hours] 1 hour	Ind: None Type: O2	P052 = 3
r049 (G189)	**Fault time** Display of time at which the current fault, and the last 7 acknowledged faults, were activated. i001: Current fault hours i002: 1st acknowledged fault hours i003: 2nd acknowledged fault hours i004: 3rd acknowledged fault hours i005: 4th acknowledged fault hours i006: 5th acknowledged fault hours i007: 6th acknowledged fault hours i008: 7th acknowledged fault hours	0 to 65535 [hours] 1 hour	Ind: 8 Type: O2	P052 = 3
P050 *****	**Language** Language of plaintext display on optional OP1S operator panel and in DriveMonitor PC service routine 0: German 1: English	0 to 1 1	Ind: None FS=0 Type: O2	P052 = 3 P051 ≥ 0 Online

PNU	Description	Value range [Unit] Steps	No. indices Factory setting Type	See Change (Access / Status)

11.3 Access authorization levels

P051 *	**Key parameters** 0 No access authorization 6 Do not set (for use by DriveMonitor) 7 Do not set (for use by DriveMonitor) 9 Do not set (for use by DriveMonitor) 21 Restore factory settings All parameters are reset to their defaults (factory settings). Parameter P051 is then automatically reset to factory setting "40". 22 Do not set 25 Do not set 26 Do not set 27 Do not set 28 Do not set 29 Do not set 30 Do not set 40 Access authorization to parameter values for authorized service personnel	see Column 2	Ind: None FS=40 Type: O2	P052 = 3 P051 ≥ 0 Online
P052 *	**Selection of display parameters** 0 0 Display only parameters that are not set to original factory settings 1 Display only parameters for simple applications 3 Display all parameters used	0, 1, 3	Ind: None FS=3 Type: O2	P052 = 3 P051 ≥ 0 Online
P053 *	**Control word for the permanent memory** [SW 1.7 and later] Disabling or enabling write accesses to the permanent memory i001: Disabling or enabling write accesses to the parameter memory 0 Only save parameter P053 in the permanent memory; parameter changes are active immediately but the changed values are only stored temporarily and are lost when the electronics supply voltage is switched off 1 Save all parameter values in the permanent memory i002: Disabling or enabling write accesses to the memory of the nonvolatile process data 0 Do not save nonvolatile process data in the permanent memory 1 Save all nonvolatile process data in the permanent memory If the nonvolatile process data are not stored (P053.002=0), data are lost when the electronics supply of the SIMOTRAS HD is switched off, i.e. they have the value 0 after the electronics supply is switched on again: K0240: Setpoint of the motor potentiometer K0309: Motor heating K0310: Thyristor heating K9195: Output of the 1st tracking/storage element K9196: Output of the 2nd tracking/storage element	0 to 1 1	Ind: 2 FS=1 Type: O2	P052 = 3 P051 = 0 Online
P054	**OP1S – Background lighting** 0 ON continuously 1 ON when panel is in use	0, 1	Ind: None FS=0 Type: O2	P052 = 3 P051 ≥ 0 Online

PNU	Description	Value range [Unit] Steps	No. indices Factory setting Type	See Change (Access / Status)
P055 * (G175)	**Copy function data set** This parameter allows parameter set 1, 2, 3 or 4 to be copied to parameter set 1, 2, 3 or 4. This function is applicable only to parameters with 4 indices in the function data set (see also Section 9.1, Data sets and Section 9.8, and Section 8, Sheet 175). 0xy Do nothing, automatic resetting value at the end of a copy operation. 1xy The contents of parameter set x (source data set, x=1, 2, 3 or 4) are copied to parameter set y (target data set, y=1, 2, 3 or 4) (parameter set x remains unchanged, the original contents of parameter set y are overwritten). x and y are the respective parameter set numbers (1, 2, 3 or 4) of the source and target parameter sets. The copy operation is started by switching P055 over into parameter mode when P055=1xy. During the copy operation, the numbers of the parameters being copied are displayed on the operator panel (PMU). At the end of the copy operation, P055 is reset to P055=0xy.	012 to 143 1	Ind: None FS=012 Type: L2	P052 = 3 P051 = 40 Offline
r056 (G175)	**Display of active function data set**	1 to 4 1	Ind: None Type: O2	P052 = 3
P057 * (G175)	**Copy Bico data set** This parameter allows parameter set 1 or 2 to be copied to parameter set 1 or 2. This function is applicable only to parameters with 2 indices in the Bico data set (see also Section 9.1, Data sets and Section 9.8, and Section 8, Sheet 175). 0xy Do nothing, automatic resetting value at the end of a copy operation. 1xy The contents of parameter set x (source data set, x=1 or 2) are copied to parameter set y (target data set, y=1 or 2) (parameter set x remains unchanged, the original contents of parameter set y are overwritten). x and y are the respective parameter set numbers (1 or 2) of the source and target parameter sets. The copy operation is started by switching P057 over into parameter mode when P057=1xy. During the copy operation, the numbers of the parameters being copied are displayed on the operator panel (PMU). At the end of the copy operation, P057 is reset to P057=0xy.	012 to 121 1	Ind: None FS=012 Type: L2	P052 = 3 P051 = 40 Offline
r058 (G175)	**Display of active Bico data set**	1 to 2 1	Ind: None Type: O2	P052 = 3
r059	**Display of operating state** Meaning as for r000	0.0 to 14.5 0.1	Ind: None Type: O2	P052 = 3

11.4 Definition of SIMOTRAS converter

r060 (G101)	**Software version** Converter software release i001: CUD i002: Slot D (board location 2) i003: Slot E (board location 2) i004: Slot F (board location 3) i005: Slot G (board location 3)	0.0 to 9.9 0.1	Ind: 5 Type: O2	P052 = 3
r061 (G101)	**Creation date of software** i001: Year i002: Month i003: Day i004: Hour i005: Minute		Ind: 5 Type: O2	P052 = 3

PNU	Description	Value range [Unit] Steps	No. indices Factory setting Type	See Change (Access / Status)
r062 (G101)	**Checksum** i001: Converter firmware checksum i002: Boot sector checksum		Ind: 2 Type: L2	P052 = 3
r063 (G101)	**Board code** Identification code of boards mounted in locations 1 to 3 of electronics box. 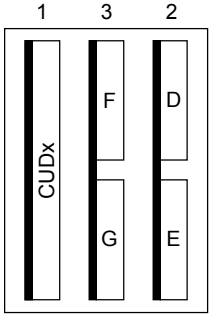 Designation of locations 1 to 3 and slots D to G in electronics box i001: Board in location 1 75: CUD1 76: CUD1 + CUD2 i002: Board in slot D (upper slot of location 2) 111: Pulse encoder board (SBP) [SW 1.8 and later] 131 to 139: Technology board 141 to 149: Communications board 151, 152, 161: Special board (EB1, EB2, SLB) i003: Board in slot E (lower slot of location 2) 111: Pulse encoder board (SBP) [SW 1.8 and later] 131 to 139: Technology board 141 to 149: Communications board 151, 152, 161: Special board (EB1, EB2, SLB) i004: Board in slot F (upper slot of location 3) 111: Pulse encoder board (SBP) [SW 1.8 and later] 141 to 149: Communications board 151, 152, 161: Special board (EB1, EB2, SLB) i005: Board in slot G (lower slot of location 3) 111: Pulse encoder board (SBP) [SW 1.8 and later] 141 to 149: Communications board 151, 152, 161: Special board (EB1, EB2, SLB)		Ind: 5 Type: O2	P052 = 3
r064 (G101)	**Board compatibility** Compatibility identifier of boards in locations 1 to 3 of electronics box. The compatibility identifier is bit-coded. To ensure the compatibility of a board, it must have a "1" setting at the same bit location of the parameter value as the CUD (in location 1 / index i001). Indices: i001: Compatibility identifier of board in location 1 i002: Compatibility identifier of board in slot D i003: Compatibility identifier of board in slot E i004: Compatibility identifier of board in slot F i005: Compatibility identifier of board in slot G Example: Index Value Bit representation Compatible with CUD i001 253 0000 0000 1111 1101 i002 002 0000 0000 0000 0010 no i003 001 0000 0000 0000 0001 yes		Ind: 5 Type: O2	P052 = 3

PNU	Description	Value range [Unit] Steps	No. indices Factory setting Type	See Change (Access / Status)
r065 (G101)	**Software identifiers** Additional software version identifiers of boards in locations 1, 2 and 3 of electronics box for internal purposes. Indices: i001: Software identifier of board in location 1 i002: Software identifier of board in slot D i003: Software identifier of board in slot E i004: Software identifier of board in slot F i005: Software identifier of board in slot G		Ind: 5 Type: O2	P052 = 3

11.5 Definition of SIMOTRAS power section

r068 (G101)	**Options according to rating plate** 0 No option 1 Option L04 (low voltage) 2 - 3 - 4 H78 (65°Celsius) 5 H78 + L04 6 - 7 -		Ind: None Type: 02	P052 = 3
r069 (G101)	**SIMOTRAS serial number** i001: 1st and 2nd places of serial number i002: 3rd and 4th places of serial number i003: 5th and 6th places of serial number i004: 7th and 8th places of serial number i005: 9th and 10th places of serial number i006: 11th and 12th places of serial number i007: 13th and 14th places of serial number i008 to i015:0 i016: Checksum for serial number The serial number ASCII code is displayed in this parameter. The number is output in plaintext on the OP1S panel.		Ind: 16 Type: L2	P052 = 3
r070 (G101)	**MLFB (order number) for SIMOTRAS** The corresponding MLFB is displayed in encoded form in this parameter. The MLFB is displayed in plaintext on the OP1S panel.	0 to 73 1	Ind: None Type: O2	P052 = 3
r071 (G101)	**Converter rated supply voltage** Converter rated supply voltage as specified on rating plate	0 to 1000 [V] 1V	Ind: None Type: O2	P052 = 3
r072 (G101)	**Converter rated current** i001: Converter rated current as specified on rating plate i002: Actual converter rated current as set in parameter P076.001	0.0 to 6553.5 [A] 0.1A	Ind: 2 Type: O2	P052 = 3

PNU	Description	Value range [Unit] Steps	No. indices Factory setting Type	See Change (Access / Status)
P075 * (G101) (G161)	**Control word for power section** Selection of operating characteristics of thermal monitor (I2t monitoring) of power section 0 Dynamic overload capability is not permitted The motor current is limited to P077 * r072.001. 1 Dynamic overload capability is permitted, alarm A039 The motor current is limited to P077 * 2 * r072.001 as long as the calculated thyristor temperature does not exceed the permitted value. If the temperature exceeds the permitted value, the SIMOTRAS HD protects itself by reducing the current limit to P077 * r072.001. Alarm A039 is output at the same time. The motor current setpoint limit is not increased to P077 * 2 * r072.001 (alarm A039 also disappears) until the calculated thyristor temperature has dropped below the limit value again and the motor current setpoint is lower than the converter rated current (r072.001). 2 Dynamic overload capability is permitted, fault F039 The motor current is limited to P077 * 2 * r072.001 as long as the calculated thyristor temperature does not exceed the permitted value. Fault message F039 is output if the permissible temperature limit is exceeded.	0 to 2 1	Ind: None FS=1 Type: O2	P052 = 3 P051 = 40 Offline
P076 * (G101)	**Reduction of converter rated current** i001: For the purpose of achieving a close match between the converter and motor, the converter rated current is reduced to the value entered here. The following values can be set: 10.0%*), 20.0%, 33.3%, 40.0%, 50.0%, 60.0%, 66.6%, 70.0%, 80.0%, 90.0% and 100.0% *) for use by works engineers only i002: irrelevant	see Column 2	Ind: 2 FS=100.0 Type: O2	P052 = 3 P051 = 40 Offline
P077 (G101) (G161)	**Total thermal reduction factor** The factor set in this parameter effects a reduction in the motor current limit (as defined by the setting in P075). The converter must be derated in the following instances: – Operation at high ambient temperatures: If the ambient temperature is higher than 45°C (on naturally air-cooled converters) or 40°C (on converters with forced air-cooling), the possible load capability of the converter decreases as a consequence of the maximum permissible thyristor junction temperature by percentage reduction "a" as specified in the table in Section 3.4, resulting in a temperature reduction factor of **k_{temp} = (100 - a) / 100** – Installation altitudes of over 1000m above sea level: In this case, the lower air density and thus less effective cooling reduce the possible load capability of the converter to the percentage load **"b1"** specified in the table in Section 3.4, resulting in an installation altitude reduction factor of **$k_{altitude}$ = b1 / 100** P077 must be set as follows: **P077 = k_{temp} * $k_{altitude}$** Note: A general reduction in the converter rated current (through appropriate setting of parameter P076.001) can be included in this calculation.	0.50 to 1.00 0.01	Ind: None FS=1.00 Type: O2	P052 = 3 P051 = 40 Offline

PNU	Description	Value range [Unit] Steps	No. indices Factory setting Type	See Change (Access / Status)
P078 (G101)	**Reduction of converter rated supply voltage** i001: Rated input voltage i002: Irrelevant The rated voltage value of the power system actually used to supply the power section must be set in this parameter. This setting acts as the reference for the undervoltage, overvoltage and phase failure monitoring functions (see also P351, P352 and P353) as well as for connectors K0285 to K0289, K0291, K0292, K0301, K0302, K0303 and K0305	10 to r071 [V] 1V	Ind: 2 FS=r071 Type: O2	P052 = 3 P051 = 40 Offline

11.6 Setting values for converter control

P080 * (G140)	**Control word for brake control** 1 The brake is a holding brake When the "Operating enable" command is cancelled and the "Voltage disconnection" command is input, the "Close brake" command is not input until $n<n_{min}$ (P370, P371) is reached. 2 The brake is an operating brake When the "Operating enable" command is cancelled and the "Voltage disconnection" is input, the "Close brake" command is input immediately, i.e. while the motor is still rotating.	1 to 2	Ind: None FS=2 Type: O2	P052 = 3 P051 = 40 Offline
P083 * FDS (G151)	**Selection of actual speed value** 0 Actual speed value is not yet selected (fixed value 0%) 1 Actual speed value supplied by "Main actual value" channel (K0013) (terminals XT.103, XT.104) 2 Actual speed value supplied by "Actual speed from pulse encoder" channel (K0040) 3 Do not set! 4 Actual speed value is wired up freely (selected in P609)	0 to 4 1	Ind: 4 FS=0 Type: O2	P052 = 3 P051 = 40 Offline
P084 * (G160)	**Selection of closed-loop speed / current or torque control** 1 Operation under closed-loop speed control 2 Operation under closed-loop current / torque control: the setpoint supplied by the ramp-function generator output is input as a current or torque setpoint (speed controller is bypassed	1 to 2 1	Ind: None FS=1 Type: O2	P052 = 3 P051 = 40 Offline
P085	**Wait period after cancellation of inching command** After an inching command has been cancelled, the drive dwells in operating state o1.3 for the time period set in this parameter with the controllers disabled. This wait period does not commence until $n<n_{min}$ (P370, P371) is reached. If a new inching command is input within this period, then the drive switches to the next operating state (o1.2 or lower). However, if the time runs out without a new inching command being entered, then the drive switches to operating state o7 (see also Section 9).	0.0 to 60.0 [s] 0.1s	Ind: None FS=10.0 Type: O2	P052 = 3 P051 = 40 Online
P086	**Voltage failure period for automatic restart** If the voltage fails (F001, F004) at one of the terminals U1, V1, W1, 5U1, or 5W1, or if it drops below a certain threshold (F006 undervoltage) or exceeds a certain threshold (F007 overvoltage), or its frequency is too low (F008 frequency < P363) or too high (F009 frequency > P364), then the corresponding fault message is activated only if the fault condition has not been eliminated within the "Automatic restart" period set in this parameter. The gating pulses and controllers are disabled while the fault conditions are present. The converter waits in operating state o4 or is in o13. Setting this parameter to 0.00s deactivates the "Automatic restart" function. NOTE: Setting values higher than 2.00s are effective only in relation to the voltages at terminals U1, V1and W1. A "restart time" of 2.00 s is operative in this case for the voltage at terminals 5U1 and 5W1 (electronics power supply).	0.00 to 10.00 [s] 0.01s	Ind: None FS=0.20 Type: O2	P052 = 3 P051 = 40 Online

PNU	Description	Value range [Unit] Steps	No. indices Factory setting Type	See Change (Access / Status)
P087 (G140)	**Brake release time** -10.00 to -0.01 s The "Release brake" command is delayed in relation to enabling of the gating pulses for thyristors and controllers (i.e. operating state I, II or --) by the delay time set in this parameter. During this period, the motor rotates against the closed brake. This setting is useful, for example, for vertical loads. 0.00 to +10.00 s When a "Switch-on" or "Inching" or "Crawling" command is input with "Operating enable", the drive dwells in operating state o1.0 for the delay period set in this parameter; the internal controller enabling signal, and thus enabling of the thyristor gating pulses, do not take effect until the delay period has elapsed so as to give the holding brake time to open.	-10.00 to 10.00 [s] 0.01s	Ind: None FS=0.00 Type: I2	P052 = 3 P051 = 40 Online
P088 (G140) (G187)	**Brake closing time** When the "Switch-on" or "Inching" or "Crawling" command is cancelled, or when the "Switch-on" command is not applied, or when the "Fast stop" command is input, the internal controller disabling signal, and thus the thyristor gating pulse disabling signal, is not actually activated after $n<n_{min}$ has been reached until the time delay set in this parameter has elapsed. During this period, the drive continues to produce a torque (operating state I, II or – –), so as to give the holding brake enough time to close.	0.00 to 100.00 [s] 0.01s	Ind: None FS=10.00 Type: O2	P052 = 3 P051 = 40 Online
P089	**Maximum wait time for voltage to appear at power section** When the line contactor has dropped out and the "Switch-on" or "Inching" or "Crawling" command is applied, the converter dwells in operating state o4 until voltage appears at the power section. The corresponding fault message is activated if no power section voltage is detected within the period specified by this parameter (response threshold for function which checks for voltage at power section, see parameter P353).	0.0 to 60.0 [s] 0.1s	Ind: None FS=2.0 Type: O2	P052 = 3 P051 = 40 Online
P090	**Stabilization time for line voltage** When the "Switch-on" or "Inching" or "Crawling" command is applied, or after a phase failure has been detected in the mains supply with active "Automatic restart" function (P086>0), the converter dwells in operating state o4 until voltage appears at the power section. Line voltage is not assumed to be applied to the power terminals until the amplitude, frequency and phase symmetry have remained within the permissible tolerance for a period exceeding the setting in this parameter. Caution: The setting in P090 must be lower than the settings in P086 (except when P086=0.0) and P089!	0.01 to 1.00 [s] 0.01s	Ind: None FS=0.02 Type: O2	P052 = 3 P051 = 40 Online
P091	**Setpoint threshold** i001: Threshold for function "Switch on only if setpoint is low" The converter can be switched on only if a setpoint $\|K0193\| \leq$ P091.001 is applied to the ramp-function generator input. If the applied setpoint is higher, the converter dwells in state o6 after "switch-on" until the absolute setpoint value is $\leq$ P091.001. i002: Threshold for function "Automatic pulse disable if setpoint is low" [SW 2.0 and later] If |n-set| (|K0193|) and |n-act| (K0166) are less than P091.002, the firing pulses are disabled and the drive goes into state o2.0.	0.00 to 199.99 [%] 0.01%	Ind: 2 FS= i001: 199.99 i002: 0.00 Type: O2	P052 = 3 P051 = 40 Online
P093	**Pick-up delay for line contactor** Pick-up of the line contactor is delayed in relation to "Switch on auxiliaries" by the time delay set in this parameter.	0.0 to 120.0 [s] 0.1s	Ind: None FS=0.0 Type: O2	P052 = 3 P051 = 40 Online
P094	**Switch-off delay for auxiliaries** Switch-off of the auxiliaries is delayed in relation to dropout of the line contactor by the time delay set in this parameter.	0.0 to 6500.0 [s] 0.1s	Ind: None FS=0.0 Type: O2	P052 = 3 P051 = 40 Online

PNU	Description	Value range [Unit] Steps	No. indices Factory setting Type	See Change (Access / Status)
P095	**Pick-up time for a contactor in the motor circuit** If the output (terminals U2, V2, W2) is switched through to the motor via a contactor, and if this contactor is controlled by the relay output terminals 109 and 110, then the gating pulses may not be enabled until the contactor has safely picked up. For this purpose, it may be necessary to parameterize an additional delay time for the pick-up operation. The timer set in P095 commences during a pick-up operation when the converter reaches operating state o4. If the timer has still not run down by the time the converter exits state o4, then the converter dwells in state o3.2 until the timer has finished. During the time period set in P095, the "Main contactor checkback" signal must also switch to "1" if this function is activated (see P691). Otherwise the converter dwells in state o3.3 until the timer has finished and fault message F004 is then output with fault value 6.	0.00 to 1.00 [s] 0.01s	Ind: None FS=0.00 Type: O2	P052 = 3 P051 = 40 Online
P096	**Run-on time for the converter fan** After the drive has stopped (an operating state ≥ 7.0 is reached), the fan continues to run until the power section has cooled down. This parameter can be used to set the minimum run-on time.	0.0 to 60.0 [min] 0.1min	Ind: None FS=4.0 Type: O2	P052 = 3 P051 = 40 Online

11.7 Definition of motor

P100 * FDS	**Rated motor current (acc. to motor rating plate)** 0.0 Parameter not yet set	0.0 to 6553.0 [A] 0.1A	Ind: 4 FS=0.0 Type: O2	P052 = 3 P051 = 40 Offline
P113 * FDS	**Continuous current factor torque control / current control** This parameter defines the current to be permitted as a continuous current by the I^2t motor monitoring function without activation of alarm message A037 or fault message F037. This current is the product of calculation P113 * P100.	0.50 to 2.00 0.01	Ind: 4 FS=1.00 Type: O2	P052 = 3 P051 = 40 Offline
P114 FDS	**Thermal time constant of motor** (see Section 9.10) 0.0 I^2t monitoring deactivated	0.0 to 80.0 [min] 0.1min	Ind: 4 FS=10.0 Type: O2	P052 = 3 P051 = 40 Online

PNU	Description	Value range [Unit] Steps	No. indices Factory setting Type	See Change (Access / Status)

11.8 Definition of pulse encoder, speed sensing using pulse encoder

The following types of pulse encoder can be used (type selection in P140):

1. Pulse encoder type 1
   Encoder with two pulse tracks mutually displaced by 90° (with/without zero marker)

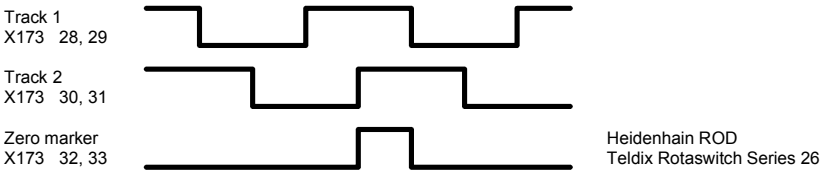

2. Pulse encoder type 1a
   Encoder with two pulse tracks mutually displaced by 90° (with/without zero marker). The zero marker is converted internally to a signal
   in the same way as on encoder type 1.

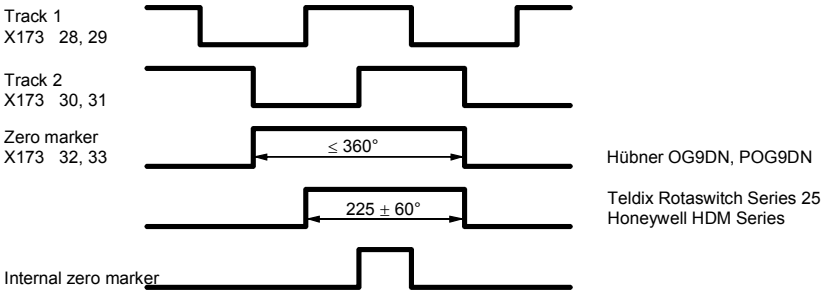

3. Pulse encoder type 2
   Encoder with one pulse track per direction of rotation (with/without zero marker).

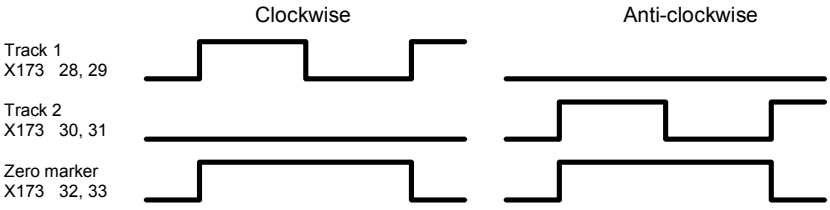

4. Pulse encoder type 3
   Encoder with one pulse track and one output for direction of rotation (with/without zero marker).

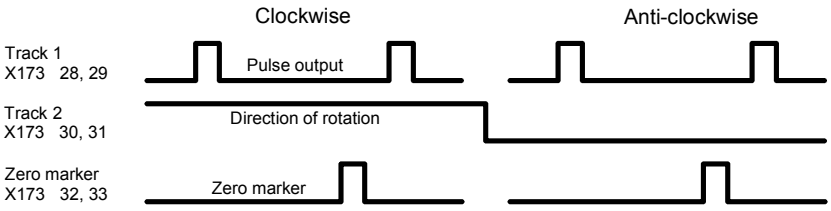

PNU	Description	Value range [Unit] Steps	No. indices Factory setting Type	See Change (Access / Status)

Notes on selecting a pulse encoder (number of pulses):

The lowest speed which can be measured by a pulse encoder is calculated with the following equation:

$$n_{min}\,[U/min] = 21973 * \frac{1}{X * P141}$$

Formula applies with a nominal measuring time of 1 ms when P146=0 and P147=0

The following applies:
X = 1 for 1x evaluation of pulse encoder signals (P144=0)
2 for 2x evaluation of pulse encoder signals (P144=1)
4 for 4x evaluation of pulse encoder signals (P144=2)
see also "Single/multiple evaluation of encoder pulses"

Lower speeds are interpreted as n=0.

The frequency of the pulse encoder signals at terminals 28 and 29 or 30 and 31 must not be higher than 300 kHz.
The highest speed which can be measured by a pulse encoder is calculated with the following equation:

$$n_{max}\,[U/min] = \frac{18000000}{P141}$$

When selecting a pulse encoder, therefore, it is important to ensure that the lowest possible speed ≠ 0 is significantly higher than n_{min} and the highest possible speed does not exceed n_{max}.

$$IM >> \frac{21973}{X * n_{min}\,[U/min]}$$

$$IM \leq \frac{18000000}{n_{max}\,[U/min]}$$

Equations for selection of pulses per revolution IM of pulse encoder

Single/multiple evaluation of encoder pulses:

The setting for single/multiple evaluation of encoder pulses is applicable for both the speed and position sensing functions.

1x evaluation:	Only the rising edges of one pulse track are evaluated (applies to all encoder types).
2x evaluation:	The rising and falling edges of one pulse track are evaluated (can be set for encoder types 1, 1a and 2).
4x evaluation:	The rising and falling edges of both pulse tracks are evaluated (can be set for encoder types 1 and 1a)

See parameters P450 and P451 for position sensing function

P140 * (G145)	**Selection of pulse encoder type** See beginning of this Section for pulse encoder types 0 No encoder/"Speed sensing with pulse encoder" function not selected 1 Pulse encoder type 1 2 Pulse encoder type 1a 3 Pulse encoder type 2 4 Pulse encoder type 3	0 to 4 1	Ind: None FS=1 Type: O2	P052 = 3 P051 = 40 Offline
P141 (G145)	**Number of pulses of pulse encoder**	1 to 32767 [pulses/rev] 1 pulse/rev	Ind: None FS=250 Type: O2	P052 = 3 P051 = 40 Offline
P142 * (G145)	**Matching to pulse encoder signal voltage** 0 Pulse encoder outputs 5 V signals 1 Pulse encoder outputs 15V signals Matching of internal operating points to signal voltage of incoming pulse encoder signals. **CAUTION** Resetting parameter P142 to the alternative setting does not switch over the supply voltage for the pulse encoder (terminals X173.26 and 27). Terminal X173.26 always supplies +15V. An external voltage supply must be provided for pulse encoders requiring a 5V supply.	0 to 1 1	Ind: None FS=1 Type: O2	P052 = 3 P051 = 40 Offline

PNU	Description	Value range [Unit] Steps	No. indices Factory setting Type	See Change (Access / Status)
P143 FDS (G145)	**Setting the maximum speed for pulse encoder operation** The speed set in this parameter corresponds to an actual speed (K0040) of 100% = rated motor speed.	1.0 to 6500.0 [rev/min] 0.1rev/min	Ind: 4 FS=1450.0 Type: O2	P052 = 3 P051 = 40 Online

Control parameters for speed sensing with pulse encoder P144 to P147:

P144 and P147 determine the basic setting for actual speed sensing by means of pulse encoder (single or multiple evaluation of pulse encoder signals and nominal measuring time) and thus also define the lowest possible measurable speed (minimum speed).

P145 and P146 can be used in special cases to extend the measurable speed range down to even lower speeds, on the basis of the minimum speed defined by the settings in P144 and P147.

P144 FDS (G145)	**Multiple evaluation of encoder signals** 0 1x evaluation of pulse encoder signals 1 2x evaluation of pulse encoder signals (for encoder types 1, 1a, 2) 2 4x evaluation of pulse encoder signals (for encoder types 1, 1a) Note: In contrast to the 1x evaluation method, 2x or 4x evaluation reduces the minimum measurable speed by a factor of 2 or 4 respectively, but may produce an "unsteady" actual speed value on encoders with unequal pulse/pause ratio or without an exact 90° displacement between encoder signals.	0 to 2 1	Ind: 4 FS=0 Type: O2	P052 = 3 P051 = 40 Online
P145 FDS (G145)	**Automatic measuring range switchover for measurement of low speeds - switchover of multiple evaluation** 0 Automatic switchover of multiple evaluation of pulse encoder signals OFF (i.e. P144 is always active) 1 Automatic switchover of multiple evaluation of pulse encoder signals ON (i.e. when P144 = 0, 2x evaluation is selected for low speeds and 4x evaluation for very low speeds. When P144 = 1, 4x evaluation is selected for low speeds) As opposed to P145 = 0, this setting reduces the minimum measurable speed by up to a factor of 4. Caution: Switching over the multiple evaluation method for encoder pulses also affects the position sensing function in the measuring channel. For this reason, this setting may not be used in conjunction with positioning operations. Connectors K0042 to K0044 are inoperative when P145 = 1.	0 to 1 1	Ind: 4 FS=1 Type: O2	P052 = 3 P051 = 40 Online
P146 FDS (G145)	**Automatic measuring range switchover for measurement of low speeds - switchover of measuring time** 0 Automatic switchover of measuring time OFF (i.e. P147 is always active) 1 Automatic switchover of measuring time ON This setting extends the measuring time for low speeds (based on the measuring time set in P147, i.e. when P147 = 0, the nominal measuring time is switched over to 2 ms for low speeds and to 4 ms for very low speeds. When P147 = 1, the nominal measuring time is switched over to 4 ms for low speeds) Caution: When P146=1, the minimum measurable speed can be reduced by up to a factor of 4 as opposed to a 0 setting. However, this setting results in a longer actual speed sensing delay in the extended minimum speed range.	0 to 1 1	Ind: 4 FS=1 Type: O2	P052 = 3 P051 = 40 Offline

PNU	Description	Value range [Unit] Steps	No. indices Factory setting Type	See Change (Access / Status)
P147 * FDS (G145)	**Nominal measuring time of pulse encoder signal evaluation** 0 Nominal measuring time 1 ms, gating-pulse-synchronized measurement 1 Nominal measuring time 2 ms, gating-pulse-synchronized measurement (produces "steadier" actual speed value than setting 0) 2 Nominal measuring time 4 ms, gating-pulse-synchronized measurement (for drives with high moment of inertia, produces "steadier" actual speed value than setting 0) 12 Nominal measuring time 0.2 ms, asynchronous measurement 13 Nominal measuring time 0.3 ms, asynchronous measurement ... 20 Nominal measuring time 1 ms, asynchronous measurement Note: 12 to 20 Nominal measuring time 0.2 ms to 1 ms reduces dead time in the actual speed value channel, but "less steady" actual speed value than achieved with setting 0 to 2 [can be set only in SW 1.9 and later] Caution: When P147=1 or 2 the minimum measurable speed can be reduced by a factor of 2 or 4 respectively as opposed to 0 or 12 to 20. However, these settings increase the actual speed sensing delay. For this reason, P200 should be parameterized to at least 5ms before optimizing the speed controller.	0 to 20 [ms] 1	Ind: 4 FS=0 Type: O2	P052 = 3 P051 = 40 Offline

11.9 Closed-loop current control, auto-reversing stage, gating unit

P152 * FDS (G163)	**Line frequency correction** The internal line synchronization for the gating pulses derived from the power terminals is averaged over the number of line periods set in this parameter. In operation on "weak" power supplies with unstable frequencies, for example, on a diesel-driven generator (isolated operation), this parameter must be set lower than for operation on "constant V/Hz" systems in order to achieve a higher frequency correction speed.	1 to 20	Ind: 4 FS=20 Type: O2	P052 = 3 P051 = 40 Offline
P153 * FDS (G162)	**Control word for precontrol** 0 Precontrol disabled, precontrol output=180° 1 Precontrol active 2 Precontrol active 3 Precontrol active [SW 1.7 and later] Note: With P153 = 2 or 3 and if no “zero delay-angle setting“, the output of the precontrol is limited to P167.	0 to 3 1	Ind: 4 FS=2 Type: O2	P052 = 3 P051 = 40 Offline
P154 * FDS (G162)	**Set current controller I component to zero** 0 Set controller I component to zero (i.e. to obtain pure P controller) 1 Controller I component is active	0 to 1 1	Ind: 4 FS=1 Type: O2	P052 = 3 P051 = 40 Offline
P155 FDS (G162)	**Current controller P gain** Proportional gain of current controller	0.01 to 200.00 0.01	Ind: 4 FS=0.20 Type: O2	P052 = 3 P051 = 40 Online
P156 FDS (G162)	**Current controller reset time**	0.001 to 10.000 [s] 0.001s	Ind: 4 FS=0.020 Type: O2	P052 = 3 P051 = 40 Online
P157 * FDS (G162)	**Control word for current setpoint integrator** 0 Reduced gearbox stressing The integrator is active only after a change in torque direction (acts as ramp-function generator for current setpoint only until the output reaches the setpoint at the integrator input for the 1st time after a change in torque direction). 1 Current setpoint integrator The integrator is always active (acts as ramp-function generator for the current setpoint)	0 to 1 1	Ind: 4 FS=1 Type: O2	P052 = 3 P051 = 40 Offline
P158 FDS (G162)	**Ramp-up time for current setpoint integrator (reduced gearbox stressing)** Period of an acceleration ramp with a setpoint step change from 0% to 100% at r072.002.	0.000 to 1.000 [s] 0.001s	Ind: 4 FS=0.000 Type: O2	P052 = 3 P051 = 40 Online

PNU	Description	Value range [Unit] Steps	No. indices Factory setting Type	See Change (Access / Status)
P159 FDS (G163)	**Switchover threshold for auto-reversing stage** 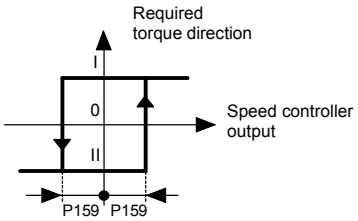 	0.00 to 100.00 [%] 0.01% of n controller output	Ind: 4 FS=5.00 Type: O2	P052 = 3 P051 = 40 Online
P160 FDS (G163)	**Additional torque-free interval** Additional torque-free interval for torque direction change in 4Q operation.	0.000 to 2.000 [s] 0.001s	Ind: 4 FS=0.000 Type: O2	P052 = 3 P051 = 40 Online
P164 * FDS (G162)	**Set current controller P component to zero** 0 Set controller P component to zero (i.e. to obtain pure I controller) 1 Controller P component is active	0 to 1 1	Ind: 4 FS=1 Type: O2	P052 = 3 P051 = 40 Offline
P166 FDS (G162)	**Filter time for precontrol** The precontrol input signal is applied via a filtering element	0 to 10000 [ms]	Ind: 4 FS=40 Type: O2	P052 = 3 P051 = 40 Online
P167 FDS (G162)	**Minimum firing angle** With P153 = 2 or 3 and if no “zero delay-angle setting“, the output of the precontrol is limited to P167.	0 to 165 [°]	Ind: 4 FS=45 Type: O2	P052 = 3 P051 = 40 Online
P168 FDS (G163)	**Maximum change to firing angle** The change of the firing angle from one firing instant to the next is limited.	1 to 179 [°]	Ind: 4 FS=15 Type: O2	P052 = 3 P051 = 40 Online

11.10 Current limitation, torque limitation

P171 FDS (G160) (G161)	**System current limit in torque direction I**	0.0 to 300.0 [% of P100] 0.1% of P100	Ind: 4 FS=200.0 Type: O2	P052 = 3 P051 = 40 Online
P172 FDS (G160) (G161)	**System current limit in torque direction II**	-300.0 to 0.0 [% of P100] 0.1% of P100	Ind: 4 FS=-200.0 Type: I2	P052 = 3 P051 = 40 Online
P174 * (G161) (G163)	**Control word root generator** [SW 2.1 and later] 0 Root generator not active recommended for current-controlled operation (P084=2) 1 Root generator active	0 to 1 1	Ind: None FS=1 Type: O2	P052 = 3 P051 = 40 Online
P175 * FDS (G162)	**Source for variable P gain** [SW 1.8 and later] The content of the selected connector acts as the P gain for the current controller after multiplication with P155.	All connector numbers 1	Ind: 4 FS=1 Type: L2	P052 = 3 P051 = 40 Offline
P176 * FDS (G162)	**Source for variable Integration time** [SW 1.8 and later] The content of the selected connector acts as the integration time for the current controller after multiplication with P156.	All connector numbers 1	Ind: 4 FS=1 Type: L2	P052 = 3 P051 = 40 Offline
P180 FDS (G160)	**Positive torque limit 1**	-300.00 to 300.00 [%] 0.01% of rated motor torque	Ind: 4 FS=300.00 Type: I2	P052 = 3 P051 = 40 Online
P181 FDS (G160)	**Negative torque limit 1**	-300.00 to 300.00 [%] 0.01% of rated motor torque	Ind: 4 FS=-300.00 Type: I2	P052 = 3 P051 = 40 Online

PNU	Description	Value range [Unit] Steps	No. indices Factory setting Type	See Change (Access / Status)
P182 FDS (G160)	**Positive torque limit 2** If "Torque limit switchover" is selected (state of binector selected in P694 =1) and the speed is higher than the threshold speed set in parameter P184, then torque limit 2 is activated in place of torque limit 1.	-300.00 to 300.00 [%] 0.01% of rated motor torque	Ind: 4 FS=300.00 Type: I2	P052 = 3 P051 = 40 Online
P183 FDS	**Negative torque limit 2** If "Torque limit switchover" is selected (state of binector selected in P694 =1) and the speed is higher than the threshold speed set in parameter P184, then torque limit 2 is activated in place of torque limit 1.	-300.00 to 300.00 [%] 0.01% of rated motor torque	Ind: 4 FS=-300.00 Type: I2	P052 = 3 P051 = 40 Online
P184 FDS (G160)	**Threshold speed for torque limits** If "Torque limit switchover" is selected (state of binector selected in P694 =1) and the speed (K0166) is higher than the threshold speed set in parameter P184, then torque limit 2 (P182, P183) is activated in place of torque limit 1 (P180, P181).	0.00 to 120.00 [%] 0.01% of maximum speed	Ind: 4 FS=0.00 Type: O2	P052 = 3 P051 = 40 Online

P191 FDS (G162)	**Filter time for setpoint for current controller** [SW 1.9 and later] Filtering of the current setpoint at the input of the current controller. The purpose of this filter is to decouple the current precontrol from the current controller.	0 to 10000 [ms] 1ms	Ind: 4 FS=0 Type: O2	P052 = 3 P051 = 40 Online

11.11 Speed controller

further parameters for the speed controller P550 - P563

Setting values for speed controller - actual value/setpoint processing				
P200 FDS (G152)	**Filter time for actual speed controller value** Filtering of the actual speed value by means of a PT1 element.	0 to 10000 [ms] 1ms	Ind: 4 FS=10 Type: O2	P052 = 3 P051 = 40 Online
P201 FDS (G152)	**Band-stop 1: Resonant frequency**	1 to 140 [Hz] 1Hz	Ind: 4 FS=1 Type: O2	P052 = 3 P051 = 40 Online
P202 FDS (G152)	**Band-stop 1: Quality** 0 Quality = 0.5 1 Quality = 1 2 Quality = 2 3 Quality = 3	0 to 3 1	Ind: 4 FS=0 Type: O2	P052 = 3 P051 = 40 Online
P203 FDS (G152)	**Band-stop 2: Resonant frequency**	1 to 140 [Hz] 1Hz	Ind: 4 FS=1 Type: O2	P052 = 3 P051 = 40 Online
P204 FDS (G152)	**Band-stop 2: Quality** 0 Quality = 0.5 1 Quality = 1 2 Quality = 2 3 Quality = 3	0 to 3 1	Ind: 4 FS=0 Type: O2	P052 = 3 P051 = 40 Online
P205 FDS (G152)	**D element: Derivative-action time**	0 to 1000 [ms] 1ms	Ind: 4 FS=0 Type: O2	P052 = 3 P051 = 40 Online
P206 FDS (G152)	**D element: Filter time**	0 to 100 [ms] 1ms	Ind: 4 FS=0 Type: O2	P052 = 3 P051 = 40 Online

r217 (G152)	**Indication of the active droop of the speed controller** [SW 1.7 and later]	0.0 to 10.0 [%] 0.1%	Ind: None Type: O2	P052 = 3
r218 (G151) (G152)	**Indication of the active integration time of the speed controller** [SW 1.7 and later]	0.010 to 10.000 [s] 0.001s	Ind: None Type: O2	P052 = 3
r219 (G151) (G152)	**Display of effective P gain of speed controller**	0.10 to 200.00 0.01	Ind: None Type: O2	P052 = 3

P221 FDS (G152)	**Speed controller: Hysteresis for speed-dependent PI/P controller switchover** [SW 1.9 and later] See P222 for further details.	0.00 to 100.00 [%] 0.01% of maximum speed	Ind: 4 FS=2.00 Type: O2	P052 = 3 P051 = 40 Online

PNU	Description	Value range [Unit] Steps	No. indices Factory setting Type	See Change (Access / Status)
P222 FDS (G152)	**Speed controller: Speed-dependent switchover threshold for PI / P controller** 0.00 Automatic switchover from PI to P controller deactivated. > 0.00 Depending on the actual speed (K0166), the PI controller switches over to a P controller if the speed drops below the threshold set in parameter P222. The integrator is not switched in again (with value of 0) until the actual speed is > P222 + P221. This function allows the drive to be stopped without overshoot using a zero setpoint with the controllers enabled. This function is active only if the binector selected in P698 is in the log. "1" state.	0.00 to 10.00 [%] 0.01% of maximum speed	Ind: 4 FS=0.00 Type: O2	P052 = 3 P051 = 40 Online

Setting values for speed controller				
P223 * FDS (G152)	**Control word for speed controller precontrol** 0 Speed controller precontrol disabled 1 Speed controller precontrol acts as torque setpoint (is added to n controller output)	0 to 1 1	Ind: 4 FS=0 Type: O2	P052 = 3 P051 = 40 Offline
P224 * FDS (G152)	**Control word for speed controller I component** 0 Set controller I component to zero (i.e. to obtain pure P controller) 1 Controller I component is active The I component is stopped when a torque or current limit is reached 2 Controller I component is active The I component is stopped when a torque limit is reached 3 Controller I component is active The I component is stopped only when ±199.99% is reached	0 to 3 1	Ind: 4 FS=1 Type: O2	P052 = 3 P051 = 40 Offline
P225 FDS (G151)	**Speed controller P gain** See also setting values for "Speed controller adaptation" function (P550 to P559). See also U645 to U649 for factors relating to the speed controller P gain.	0.10 to 200.00 0.01	Ind: 4 FS=3.00 Type: O2	P052 = 3 P051 = 40 Online
P226 FDS (G151)	**Speed controller reset time**	0.010 to 10.000 [s] 0.001s	Ind: 4 FS=0.200 Type: O2	P052 = 3 P051 = 40 Online

Speed controller droop				
Function: A parameterizable feedback loop can be connected in parallel to the I and P components of the speed controller (acts on summation point of setpoint and actual value).				
P227 FDS (G151)	**Speed controller droop** A 10% speed droop setting causes a 10% deviation in the speed from the setpoint at a 100% controller output (100% torque or current setpoint) ("softening" of closed-loop control). See also P562, P563, P630 and P684	0.0 to 10.0 [%] 0.1%	Ind: 4 FS=0.0 Type: O2	P052 = 3 P051 = 40 Online

P228 FDS (G152)	**Filter time for speed setpoint** Filtering of setpoint by means of a PT1 element. It may be useful to parameterize lower values when the ramp-function generator is in use.	0 to 10000 [ms] 1ms	Ind: 4 FS=0 Type: O2	P052 = 3 P051 = 40 Online
P229 * FDS (G152)	**Control of I component tracking for slave drive** 0 On a slave drive, the I component of the speed controller is made to follow such that M(set, ncontr.) = M(set, limit), the speed setpoint is set to the actual speed value 1 Tracking deactivated	0 to 1 1	Ind: 4 FS=0 Type: O2	P052 = 3 P051 = 40 Offline
P230 FDS (G152)	**Setting period of speed controller integrator** [SW 1.9 and later] After a positive edge at the binector set in P695, the integrator of the speed controller is set to the instantaneous value of the connector set in P631. If a time of > 0 is set on P230, this setting operation is not performed just once, but the speed controller integrator is set continually to the setting value for the parameterized time period.	0 to 10000 [ms] 1ms	Ind: 4 FS=0 Type: O2	P052 = 3 P051 = 40 Online

PNU	Description	Value range [Unit] Steps	No. indices Factory setting Type	See Change (Access / Status)
P234 FDS (G152)	**Set speed controller P component to zero** 0 Set controller P component to zero (i.e. to obtain pure I controller) 1 Controller P component is active	0 to 1 1	Ind: 4 FS=1 Type: O2	P052 = 3 P051 = 40 Offline

11.12 Ramp-function generator

(see also Section 8, Sheet G136 and Section 9)

See P639 and P640 for ramp-function generator setting parameters

P295 FDS (G136)	**Mode for rounding the ramp-function generator** [SW 1.9 and later] 0 If the setpoint is reversed during ramp-up (or ramp-down), acceleration (deceleration) is aborted and initial rounding of the deceleration (acceleration) process begins immediately. The setpoint is not increased (decreased) any further, but the signal at the ramp-function generator output has a breakpoint (i.e. a step change in the acceleration rate). 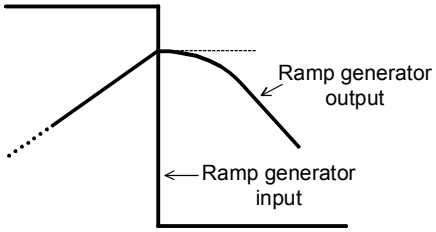 1 If the setpoint is reversed during ramp-up or ramp-down, acceleration/deceleration gradually changes to deceleration/acceleration. The setpoint increases/decreases further, but there is no breakpoint in the signal at the generator output (i.e. there is no step change in the acceleration rate). 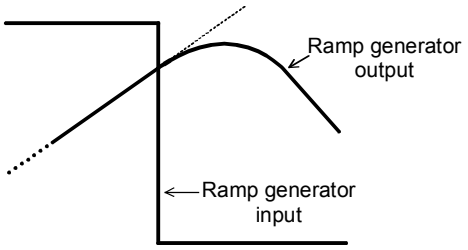 	0 to 1 1	Ind: 4 FS=0 Type: O2	P052 = 3 P051 = 40 Online
P296 FDS (G136)	**Ramp-down time of ramp generator with emergency stop (OFF3)** [SW 1.9 and later] When the "Emergency stop" command is issued, the drive must normally brake down to 0 speed along the current limit. If the mechanical design of the drive makes this option impermissible or undesirable, then a value of > 0 can be set here. In this case, the drive brakes along the deceleration ramp programmed here when the "Emergency stop" command is issued. see also parameter P330	0.00 to 650.00 [s] 0.01 s	Ind: 4 FS=0.00 Type: O2	P052 = 3 P051 = 40 Online
P297 FDS (G136)	**Lower transition rounding of ramp generator with emergency stop (OFF3)** [SW 1.9 and later] see also parameter P330	0.00 to 100.00 [s] 0.01s	Ind: 4 FS=0.00 Type: O2	P052 = 3 P051 = 40 Online
P298 FDS (G136)	**Upper transition rounding of ramp generator with emergency stop (OFF3)** [SW 1.9 and later] see also parameter P330	0.00 to 100.00 [s] 0.01s	Ind: 4 FS=0.00 Type: O2	P052 = 3 P051 = 40 Online

PNU	Description	Value range [Unit] Steps	No. indices Factory setting Type	See Change (Access / Status)
Limitation at ramp-function generator output (setpoint limitation) The effective limitations are: Upper limit: Minimum value of P300 and the four connectors selected with P632 Lower limit: Maximum value of P301 and the four connectors selected with P633 Note: The limiting values for both the positive and negative setpoint limits can have a positive or negative sign. The negative setpoint limit, for example, can therefore be parameterized to a positive value and the positive setpoint limit to a negative value.				
P300 FDS (G137)	**Positive limitation at ramp-function generator output**	-200.00 to 199.99 [%] 0.01%	Ind: 4 FS=105.00 Type: I2	P052 = 3 P051 = 40 Offline
P301 FDS (G137)	**Negative limitation at ramp-function generator output**	-200.00 to 199.99 [%] 0.01%	Ind: 4 FS=-105.00 Type: I2	P052 = 3 P051 = 40 Offline
P302 * FDS (G136)	**Select ramp-function generator / ramp-up integrator mode** 0 Normal ramp-function generator operation: Ramp-function generator setting 1 (P303 to P306) is applied. When a binary selectable input parameterized as "Ramp-function generator setting 2" (P307 to P310)" (selected in P637) or "Ramp-function generator setting 3" (P311 to P314)" (selected in P638), generator setting 2 or 3 is applied as appropriate. 1 Ramp-up integrator operation: When the setpoint is reached for the first time, ramp-function generator setting 1 is switched over to a ramp-up/down times=0 2 Ramp-up integrator operation: When the setpoint is reached for the first time, ramp-function generator setting 1 is switched over to generator setting 2 (P307 to P310) 3 Ramp-up integrator operation: When the setpoint is reached for the first time, ramp-function generator setting 1 is switched over to generator setting 3 (P311 to P314)	0 to 3 1	Ind: 4 FS=0 Type: O2	P052 = 3 P051 = 40 Offline

Ramp-function generator parameter set 1 (see also parameter P330)				
P303 FDS (G136)	**Ramp-up time 1**	0.00 to 650.00 [s] 0.01s	Ind: 4 FS=10.00 Type: O2	P052 = 3 P051 = 40 Online
P304 FDS (G136)	**Ramp-down time 1**	0.00 to 650.00 [s] 0.01s	Ind: 4 FS=10.00 Type: O2	P052 = 3 P051 = 40 Online
P305 FDS (G136)	**Lower transition rounding 1**	0.00 to 100.00 [s] 0.01s	Ind: 4 FS=0.00 Type: O2	P052 = 3 P051 = 40 Online
P306 FDS (G136)	**Upper transition rounding 1**	0.00 to 100.00 [s] 0.01s	Ind: 4 FS=0.00 Type: O2	P052 = 3 P051 = 40 Online

Ramp-function generator parameter set 2 (see also parameter P330) Ramp-function generator parameter set 2 is selected via the binector parameterized in P637.				
P307 FDS (G136)	**Ramp-up time 2**	0.00 to 650.00 [s] 0.01s	Ind: 4 FS=10.00 Type: O2	P052 = 3 P051 = 40 Online
P308 FDS (G136)	**Ramp-down time 2**	0.00 to 650.00 [s] 0.01s	Ind: 4 FS=10.00 Type: O2	P052 = 3 P051 = 40 Online
P309 FDS (G136)	**Lower transition rounding 2**	0.00 to 100.00 [s] 0.01s	Ind: 4 FS=0.00 Type: O2	P052 = 3 P051 = 40 Online
P310 FDS (G136)	**Upper transition rounding 2**	0.00 to 100.00 [s] 0.01s	Ind: 4 FS=0.00 Type: O2	P052 = 3 P051 = 40 Online

Ramp-function generator parameter set 3 (see also parameter P330) Ramp-function generator parameter set 3 is selected via the binector parameterized in P638.				
P311 FDS (G136)	**Ramp-up time 3**	0.00 to 650.00 [s] 0.01s	Ind: 4 FS=10.00 Type: O2	P052 = 3 P051 = 40 Online

PNU	Description	Value range [Unit] Steps	No. indices Factory setting Type	See Change (Access / Status)
P312 FDS (G136)	**Ramp-down time 3**	0.00 to 650.00 [s] 0.01s	Ind: 4 FS=10.00 Type: O2	P052 = 3 P051 = 40 Online
P313 FDS (G136)	**Lower transition rounding 3**	0.00 to 100.00 [s] 0.01s	Ind: 4 FS=0.00 Type: O2	P052 = 3 P051 = 40 Online
P314 FDS (G136)	**Upper transition rounding 3**	0.00 to 100.00 [s] 0.01s	Ind: 4 FS=0.00 Type: O2	P052 = 3 P051 = 40 Online

Displays				
r315 (G136)	**Display of effective times** i001: Display of effective ramp-up time i002: Display of effective ramp-down time i003: Display of effective lower transition rounding i004: Display of effective upper transition rounding	0.00 to 650.00 / 10.00 [s] 0.01s	Ind: 4 Type: O2	P052 = 3
r316 (G136)	**Display of ramp-function generator status** Representation on operator panel (PMU): 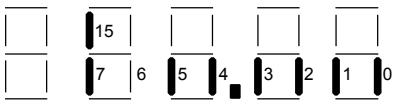 Segment: 0 RFG enable 1 RFG start 2 Setpoint enable & /OFF1 3 Set RFG 4 RFG tracking 5 Bypass RFG 7 Ramp-down 15 Ramp-up		Ind: None Type: V2	P052 = 3

P317 * FDS (G136)	**Ramp-function generator tracking** 0 Ramp-function generator tracking is not active 1 Ramp-function generator tracking is active	0 to 1 1	Ind: 4 FS=0 Type: O2	P052 = 3 P051 = 40 Offline
P318 * FDS (G136)	**Set ramp-function generator output** This parameter determines how the ramp-function generator output is set at the commencement of a "Shutdown" process: 0 The ramp-function generator output is not set at the commencement of a "Shutdown" process" 1 At the commencement of "Shutdown", the output is set to the actual speed value K0167 (actual speed value K0167 is "unfiltered") 2 At the commencement of "Shutdown", the output is set to the actual speed value K0179 (value is filtered by PT1 in P200, other filters may also be active) (setting may not be used in conjunction with P205 > 0) During a "Shutdown" process, the limitation at the ramp-function generator output is not effective. P318 must be set to 1 or 2 to prevent any (temporary) excess speed during "Shutdown" when the generator output is limited.	0 to 2 1	Ind: 4 FS=0 Type: O2	P052 = 3 P051 = 40 Offline

P319 FDS (G136)	**Delay time for enabling ramp-function generator**	0.00 to 10.00 [s] 0.01s	Ind: 4 FS=0.50 Type: O2	P052 = 3 P051 = 40 Online

11.13 Setpoint processing

P320 FDS (G135)	**Multiplier for main setpoint**	-300.00 to 300.00 [%] 0.01%	Ind: 4 FS=100.00 Type: I2	P052 = 3 P051 = 40 Online

PNU	Description	Value range [Unit] Steps	No. indices Factory setting Type	See Change (Access / Status)
P321 FDS (G135)	**Multiplier for additional setpoint**	-300.00 to 300.00 [%] 0.01%	Ind: 4 FS=100.00 Type: I2	P052 = 3 P051 = 40 Online
P322 * FDS (G135)	**Source for multiplier for main setpoint** 0 = connector K0000 1 = connector K0001 etc.	All connector numbers 1	Ind: 4 FS=1 Type: L2	P052 = 3 P051 = 40 Offline
P323 * FDS (G135)	**Source for multiplier for additional setpoint** 0 = connector K0000 1 = connector K0001 etc.	All connector numbers 1	Ind: 4 FS=1 Type: L2	P052 = 3 P051 = 40 Offline

11.14 Ramp-function generator

P330 * FDS (G136)	**Factor for ramp-function generator times** [SW 2.1 and later] Selection of a factor for the values set in parameters P296, P297, P298, P303 to P314 and P542 (ramp-function generator times). 0 Factor = 1 1 Factor = 60 i.e. effective ramp-function generator times = values set in [minutes] instead of in [seconds]	0 to 1 1	Ind: 4 FS=0 Type: O2	P052 = 3 P051 = 40 Offline

11.15 Setting values for monitoring functions and limits

Setting values for monitoring functions				
P351 FDS	**Threshold for undervoltage trip** If the line voltage exceeds a specific value and does not return to the permissible tolerance range within the "Restart time" set in P086, fault message F006 is activated. The drive dwells in operating state o4 while the line undervoltage persists.	-90 to 0 [%] 1% of P078.001	Ind: 4 FS=-80 Type: I2	P052 = 3 P051 = 40 Online
P352 FDS	**Source for overvoltage trip** If the line voltage exceeds a specific value and does not return to the permissible tolerance range within the "Restart time" set in P086, fault message F007 is activated.	0 to 99 [%] 1% of P078.001	Ind: 4 FS=40 Type: O2	P052 = 3 P051 = 40 Online
P353 FDS	**Response threshold for phase failure monitoring** If the line voltage drops below the permissible value in operating states of ≤ o4 and does not return to an "acceptable" value within the "Restart time" set in P086, fault message F004 is activated. The drive dwells in operating state o4 for the period that the line voltage remains below the threshold and during the subsequent voltage stabilization period set in P090. When a switch-on command is entered, the converter dwells in operating state o4 for a maximum delay period set in P089 until the voltages in all phases exceed the threshold set in this parameter before fault message F004 is activated.	10 to 100 [%] 1% of P078.001	Ind: 4 FS=20 Type: O2	P052 = 3 P051 = 40 Online
P355 FDS	**Stall protection time** F035 is activated if the conditions for the "Stall protection" fault message are fulfilled for longer than the period set in P355. When P355=0.0, the "Drive blocked" monitoring function (F035) is deactivated and alarm A035 is likewise suppressed.	0.0 to 600.0 [s] 0.1s	Ind: 4 FS=0.5 Type: O2	P052 = 3 P051 = 40 Online
P360 (G180) (G181)	**Response delay for external faults and alarms** The fault message or alarm is not activated on the converter until the appropriate input or corresponding control word bit (as selected in P675, P686, P688 or P689) has been in the LOW state for at least the time period set in this parameter (see also Section 8, Sheets G180 and G181). i001: Delay for external fault 1 i002: Delay for external fault 2 i003: Delay for external alarm 1 i004: Delay for external alarm 2	0 to 10000 [ms] 1ms	Ind: 4 FS=0 Type: O2	P052 = 3 P051 = 40 Online

PNU	Description	Value range [Unit] Steps	No. indices Factory setting Type	See Change (Access / Status)
P361 FDS	**Delay time for the undervoltage monitoring** [SW 1.7 and later] Activation of the fault message F006 (line undervoltage) is delayed by the time that can be set in this parameter. During this delay time firing pulses are output! Another time which is parameterized for automatic restarting (P086) only begins after the time set here has elapsed.	0 to 60000 [ms] 1ms	Ind: 4 FS=0 Type: O2	P052 = 3 P051 = 40 Online
P362 FDS	**Delay time for the overvoltage monitoring** [SW 1.7 and later] Activation of the fault message F007 (line overvoltage) is delayed by the time that can be set in this parameter. During this delay time firing pulses are output! Another time which is parameterized for automatic restarting (P086) only begins after the time set here has elapsed.	0 to 60000 [ms] 1ms	Ind: 4 FS=10000 Type: O2	P052 = 3 P051 = 40 Online
P363 FDS	**Threshold for the minimum line frequency** [SW 1.8 and later] If the line frequency falls below the value set here and does not rise above it again within the "restart" time set in P086, the fault message F008 is activated. As long as the line frequency is below the value set here, the drive is kept in operating state o4. [values < 45.0 Hz can be set in SW 1.9 and later] **CAUTION** Operation in the extended frequency range between 23 Hz and 110 Hz is available on request.	23.0 to 60.0 [Hz] 0.1 Hz	Ind: 4 FS=45.0 Type: O2	P052 = 3 P051 = 40 Online
P364 FDS	**Threshold for the maximum line frequency** [SW 1.8 and later] If the line frequency rises above the value set here and does not fall below it again within the "restart" time set in P086, the fault message F009 is activated. As long as the line frequency is above the value set here, the drive is kept in operating state o4. **CAUTION** Operation in the extended frequency range between 23 Hz and 110 Hz is available on request.	50.0 to 110.0 [Hz] 0.1 Hz	Ind: 4 FS=65.0 Type: O2	P052 = 3 P051 = 40 Online

11.16 Setting values for limit-value monitors

(see also Section 8, Sheet G187 and G188)

$n < n_{min}$ signal				
P370 FDS (G188)	**Speed threshold n_{min}** Speed threshold for $n < n_{min}$ limit-value monitor. Note: This threshold also affects the sequence of control operations at ”shutdown”, ”fast stop”, cancellation of ”Inch” or ”Crawl” command (see section 9).	0.00 to 199.99 [%] 0.01% of maximum speed	Ind: 4 FS=5.00 Type: O2	P052 = 3 P051 = 40 Online
P371 FDS (G188)	**Hysteresis for $n < n_{min}$ signal** This value is added to the response threshold if $n < n_{min}$ is active.	0.00 to 199.99 [%] 0.01% of maximum speed	Ind: 4 FS=0.50 Type: O2	P052 = 3 P051 = 40 Online

$n < n_{comp.}$ signal				
P373 FDS (G187)	**Speed threshold $n_{comp.}$** Speed threshold for $n < n_{comp.}$ signal	0.00 to 199.99 [%] 0.01% of maximum speed	Ind: 4 FS=100.00 Type: O2	P052 = 3 P051 = 40 Online
P374 FDS (G187)	**Hysteresis for < $n_{comp.}$ signal ($n < n_{comp.}$ signal)** This value is added to the response threshold if $n < n_{comp.}$ is active.	0.00 to 199.99 [%] 0.01% of maximum speed	Ind: 4 FS=3.00 Type: O2	P052 = 3 P051 = 40 Online
P375 FDS (G187)	**OFF delay for $n < n_{comp.}$ signal**	0.0 to 100.0 [s] 0.1s	Ind: 4 FS=3.0 Type: O2	P052 = 3 P051 = 40 Online

PNU	Description	Value range [Unit] Steps	No. indices Factory setting Type	See Change (Access / Status)
Setpoint/actual value deviation 2				
P376 FDS (G187)	**Permissible setpoint/actual value deviation 2** [SW 1.9 and later]	0.00 to 199.99 [%] 0.01% of maximum speed	Ind: 4 FD=3.00 Type: O2	P052 = 3 P051 = 40 Online
P377 FDS (G187)	**Hysteresis for setpoint/actual value deviation 2 signal** [SW 1.9 and later] This value is added to the response threshold if a setpoint/actual value deviation signal is active	0.00 to 199.99 [%] 0.01% of maximum speed	Ind: 4 FS=1.00 Type: O2	P052 = 3 P051 = 40 Online
P378 FDS (G187)	**Response delay for setpoint/actual value deviation signal 2** [SW 1.9 and later]	0.0 to 100.0 [s] 0.1s	Ind: 4 FS=3.0 Type: O2	P052 = 3 P051 = 40 Online
Overspeed				
P380 FDS (G188)	**Maximum speed in positive direction of rotation**	0.0 to 199.9 [%] 0.1% of maximum speed	Ind: 4 FS=120.0 Type: O2	P052 = 3 P051 = 40 Online
P381 FDS (G188)	**Maximum speed in negative direction of rotation**	-199.9 to 0.0 [%] 0.1% of maximum speed	Ind: 4 FS=-120.0 Type: I2	P052 = 3 P051 = 40 Online
Setpoint/actual value deviation				
P387 FDS (G187)	**OFF delay** If the system leaves the state “Setpoint in the controlled range“, the system waits for the time set here until the setpoint/actual value comparison for the “setpoint/actual deviation“ signal (status word 1 bit 8)becomes active again	0.0 to 100.0 [s] 0.1s	Ind: 4 FS=2.0 Type: O2	P052 = 3 P051 = 40 Online
P388 FDS (G187)	**Permissible deviation between setpoint and actual value**	0.00 to 199.99 [%] 0.01% of maximum speed	Ind: 4 FS=5.00 Type: O2	P052 = 3 P051 = 40 Online
P389 FDS (G187)	**Hysteresis for setpoint/actual value deviation signal** This value is added to the response threshold if a setpoint/actual value deviation signal is active	0.00 to 199.99 [%] 0.01% of maximum speed	Ind: 4 FS=1.00 Type: O2	P052 = 3 P051 = 40 Online
P390 FDS (G187)	**Response delay for setpoint/actual value deviation signal**	0.0 to 100.0 [s] 0.1s	Ind: 4 FS=1.0 Type: O2	P052 = 3 P051 = 40 Online

11.17 Settable fixed values

Function: The value set in the parameter is applied to the specified connector				
P401 FDS (G120)	**K401 fixed value** is applied to connector K0401	-199.99 to 199.99 [%] 0.01%	Ind: 4 FS=60.00 Type: I2	P052 = 3 P051 = 40 Online
P402 FDS (G120)	**K402 fixed value** is applied to connector K0402	-199.99 to 199.99 [%] 0.01%	Ind: 4 FS=0.00 Type: I2	P052 = 3 P051 = 40 Online
P403 FDS (G120)	**K403 fixed value** is applied to connector K0403	-199.99 to 199.99 [%] 0.01%	Ind: 4 FS=0.00 Type: I2	P052 = 3 P051 = 40 Online
P404 FDS (G120)	**K404 fixed value** is applied to connector K0404	-199.99 to 199.99 [%] 0.01%	Ind: 4 FS=0.00 Type: I2	P052 = 3 P051 = 40 Online
P405 FDS (G120)	**K405 fixed value** is applied to connector K0405	-199.99 to 199.99 [%] 0.01%	Ind: 4 FS=0.00 Type: I2	P052 = 3 P051 = 40 Online
P406 FDS (G120)	**K406 fixed value** is applied to connector K0406	-199.99 to 199.99 [%] 0.01%	Ind: 4 FS=0.00 Type: I2	P052 = 3 P051 = 40 Online
P407 FDS (G120)	**K407 fixed value** is applied to connector K0407	-199.99 to 199.99 [%] 0.01%	Ind: 4 FS=0.00 Type: I2	P052 = 3 P051 = 40 Online
P408 FDS (G120)	**K408 fixed value** is applied to connector K0408	-199.99 to 199.99 [%] 0.01%	Ind: 4 FS=0.00 Type: I2	P052 = 3 P051 = 40 Online

PNU	Description	Value range [Unit] Steps	No. indices Factory setting Type	See Change (Access / Status)
P409 FDS (G120)	**K409 fixed value** is applied to connector K0409	-199.99 to 199.99 [%] 0.01%	Ind: 4 FS=0.00 Type: I2	P052 = 3 P051 = 40 Online
P410 FDS (G120)	**K410 fixed value** is applied to connector K0410	-199.99 to 199.99 [%] 0.01%	Ind: 4 FS=0.00 Type: I2	P052 = 3 P051 = 40 Online
P411 FDS (G120)	**K411 fixed value** is applied to connector K0411	-199.99 to 199.99 [%] 0.01%	Ind: 4 FS=0.00 Type: I2	P052 = 3 P051 = 40 Online
P412 FDS (G120)	**K412 fixed value** is applied to connector K0412	-32768 to 32767 1	Ind: 4 FS=0 Type: I2	P052 = 3 P051 = 40 Online
P413 FDS (G120)	**K413 fixed value** is applied to connector K0413	-32768 to 32767 1	Ind: 4 FS=0 Type: I2	P052 = 3 P051 = 40 Online
P414 FDS (G120)	**K414 fixed value** is applied to connector K0414	-32768 to 32767 1	Ind: 4 FS=0 Type: I2	P052 = 3 P051 = 40 Online
P415 FDS (G120)	**K415 fixed value** is applied to connector K0415	-32768 to 32767 1	Ind: 4 FS=0 Type: I2	P052 = 3 P051 = 40 Online
P416 FDS (G120)	**K416 fixed value** is applied to connector K0416	-32768 to 32767 1	Ind: 4 FS=0 Type: I2	P052 = 3 P051 = 40 Online

11.18 Fixed control bits

Function: The value set in the parameter is applied to the specified binector				
P421 FDS (G120)	**B421 fixed bit** is applied to binector B0421	0 to 1 1	Ind: 4 FS=0 Type: O2	P052 = 3 P051 = 40 Online
P422 FDS (G120)	**B422 fixed bit** is applied to binector B0422	0 to 1 1	Ind: 4 FS=0 Type: O2	P052 = 3 P051 = 40 Online
P423 FDS (G120)	**B423 fixed bit** is applied to binector B0423	0 to 1 1	Ind: 4 FS=0 Type: O2	P052 = 3 P051 = 40 Online
P424 FDS (G120)	**B424 fixed bit** is applied to binector B0424	0 to 1 1	Ind: 4 FS=0 Type: O2	P052 = 3 P051 = 40 Online
P425 FDS (G120)	**B425 fixed bit** is applied to binector B0425	0 to 1 1	Ind: 4 FS=0 Type: O2	P052 = 3 P051 = 40 Online
P426 FDS (G120)	**B426 fixed bit** is applied to binector B0426	0 to 1 1	Ind: 4 FS=0 Type: O2	P052 = 3 P051 = 40 Online
P427 FDS (G120)	**B427 fixed bit** is applied to binector B0427	0 to 1 1	Ind: 4 FS=0 Type: O2	P052 = 3 P051 = 40 Online
P428 FDS (G120)	**B428 fixed bit** is applied to binector B0428	0 to 1 1	Ind: 4 FS=0 Type: O2	P052 = 3 P051 = 40 Online

11.19 Digital setpoint input (fixed setpoint, inching and crawling setpoints)

(see also Section 8, Sheets G127, G129 and G130)

Fixed setpoint

Function: Up to 8 connectors can be selected in P431 indices .01 to .08. These can be applied as an additional fixed setpoint (K0204, K0209) via the binectors selected in P430, indices .01 to .08 (setpoint is applied when binector switches to log. "1" state). P432 indices .01 to .08 can be set to define for each setpoint individually whether the ramp-function generator must be bypassed on setpoint injection.

If fixed setpoint injection is not selected, the connector set in P433 is applied to K0209.

PNU	Description	Value range [Unit] Steps	No. indices Factory setting Type	See Change (Access / Status)
P430 * (G127)	**Source for fixed-setpoint injection** Selection of binector to control injection of the fixed setpoint ("1" state = inching setpoint injected). 0 = binector B0000 1 = binector B0001 etc.	All binector numbers 1	Ind: 8 FS=0 Type: L2	P052 = 3 P051 = 40 Offline
P431 * (G127)	**Source for fixed setpoint** Selection of connector to be injected as the fixed setpoint 0 = connector K0000 1 = connector K0001 etc.	All connector numbers 1	Ind: 8 FS=0 Type: L2	P052 = 3 P051 = 40 Offline
P432 * (G127)	**Bypassing the ramp-function generator when the fixed setpoint is injected** Selection as to whether or not ramp-function generator must be bypassed when the fixed setpoint is injected. The ramp-function generator is bypassed if the AND operation between the binector selected via an index of P430 and the setting in the same index of P432 produces a log. "1"	0 to 1 1	Ind: 8 FS=0 Type: O2	P052 = 3 P051 = 40 Offline
P433 * FDS (G127)	**Source for standard setpoint** Selection of the connector to be applied if fixed-setpoint injection is not selected 0 = connector K0000 1 = connector K0001 etc.	All connector numbers 1	Ind: 4 FS=9215 Type: L2	P052 = 3 P051 = 40 Offline

Inching setpoint

Function: Up to 8 connectors can be selected in P436 indices .01 to .08. These can be applied as an inching setpoint (K0202, K0207) via the binectors selected in P435, indices .01 to .08 (setpoint is applied when binector switches to log. "1" state). P437 indices .01 to .08 can be set to define for each setpoint individually whether the ramp-function generator must be bypassed on setpoint injection. If more than one inching setpoint is injected, an output value corresponding to inching setpoint = 0% is applied.

If inching setpoint injection is not selected, the connector set in P438 is applied to K0207.

P435 * (G129)	**Source for injection of inching setpoint** Selection of binector to control injection of the inching setpoint ("1" state = inching setpoint injected). 0 = binector B0000 1 = binector B0001 etc.	All binector numbers 1	Ind: 8 FS=0 Type: L2	P052 = 3 P051 = 40 Offline
P436 * (G129)	**Source for inching setpoint** Selection of connector to be injected as the inching setpoint 0 = connector K0000 1 = connector K0001 etc.	All connector numbers 1	Ind: 8 FS=0 Type: L2	P052 = 3 P051 = 40 Offline
P437 * (G129)	**Source for selection of ramp-function generator bypass** Selection as to whether or not ramp-function generator must be bypassed when the inching setpoint is injected. The ramp-function generator is bypassed if the AND operation between the binector selected via an index of P435 and the setting in the same index of P437 produces a log. "1"	0 to 1 1	Ind: 8 FS=0 Type: O2	P052 = 3 P051 = 40 Offline
P438 * FDS (G129)	**Source for standard setpoint** Selection of the connector to be applied if inching-setpoint injection is not selected 0 = connector K0000 1 = connector K0001 etc.	All connector numbers 1	Ind: 4 FS=208 Type: L2	P052 = 3 P051 = 40 Offline

PNU	Description	Value range [Unit] Steps	No. indices Factory setting Type	See Change (Access / Status)
Crawling setpoint				
Function:	Up to 8 connectors can be selected in P441 indices .01 to .08. These can be applied as an additional crawling setpoint (K0201, K0206) via the binectors selected in P440, indices .01 to .08. P445 can be set to define whether the setpoint must be applied when the selected binectors have reached the log. "1" state ("level" when P445=0) or in response to a 0 → 1 transition ("edge" when P445=1). When setpoint injection in response to a 0 → 1 transition is selected, the setpoint injection function is reset when the binector selected in P444 switches to the log. "0" state. P442 indices .01 to .08 can be set to define for each setpoint individually whether the ramp-function generator must be bypassed on setpoint injection.			
Note:	The level/edge selection performed using P445 also applies to the switch-on command of terminal 37 or the crane control. If crawling setpoint injection is not selected, the connector set in P443 is applied to K0206.			
P440 * (G130)	**Source for injection of crawling setpoint** Selection of binector to control injection of the crawling setpoint. 0 = binector B0000 1 = binector B0001 etc.	All binector numbers 1	Ind: 8 FS=0 Type: L2	P052 = 3 P051 = 40 Offline
P441 * (G130)	**Source for crawling setpoint** Selection of connector to be injected as the crawling setpoint 0 = connector K0000 1 = connector K0001 etc.	All connector numbers 1	Ind: 8 FS=0 Type: L2	P052 = 3 P051 = 40 Offline
P442 * (G130)	**Source for selection of ramp-function generator bypass** Selection as to whether or not ramp-function generator must be bypassed when the crawling setpoint is injected. The ramp-function generator is bypassed if the AND operation between the binector selected via an index of P440 and the setting in the same index of P442 produces a log. "1"	0 to 1 1	Ind: 8 FS=0 Type: O2	P052 = 3 P051 = 40 Offline
P443 * FDS (G130)	**Source for standard setpoint** Selection of the connector to be applied if crawling-setpoint injection is not selected 0 = connector K0000 1 = connector K0001 etc.	All connector numbers 1	Ind: 4 FS=207 Type: L2	P052 = 3 P051 = 40 Offline
P444 * BDS (G130)	**Source for standstill command** Selection of the binector to control the standstill operation (OFF1) or resetting of crawling setpoint injection when P445=1 (log. "0" state = reset). 0 = binector B0000 1 = binector B0001 etc.	All binector numbers 1	Ind: 2 FS=0 Type: L2	P052 = 3 P051 = 40 Offline
P445 * (G130)	**Selection of level/edge for switch-on/crawling** Selection to define whether ON command must be input via terminal 37 or the crane control and the crawling setpoint injected in response to a log. "1" level or to a 0 → 1 transition 0 ON with log. "1" state at terminal 37 and injection of crawling setpoint with binectors selected in P440 in log. "1" state 1 ON in response to 0 → 1 transition at terminal 37 and injection of crawling setpoint in response to 0 → 1 transition of binectors selected in P440 With this setting, the ON command or injection command for the crawling setpoint is stored. The memory is reset when the binector selected in P444 switches to the log. "0" state.	0 to 1 1	Ind: None FS=0 Type: O2	P052 = 3 P051 = 40 Offline

PNU	Description	Value range [Unit] Steps	No. indices Factory setting Type	See Change (Access / Status)

11.20 Position sensing with pulse encoder

See parameters P140 to P147 for pulse encoder definition				
P450 * FDS (G145)	**Resetting of position counter** 0 Reset position counter OFF 1 Reset position counter with zero marker 2 Reset position counter with zero marker when LOW signal is applied to terminal 39 3 Reset position counter when LOW signal is applied to terminal 39 Note: Counter resetting with P450 = 2 and 3 is executed in the hardware and is not affected by how the binectors controlled by terminal 39 are interconnected	0 to 3 1	Ind: 4 FS=1 Type: O2	P052 = 3 P051 = 40 Offline
P451 * FDS (G145)	**Position counter hysteresis** 0 Hysteresis for rotational direction reversal OFF 1 Hysteresis for rotational direction reversal ON (the first pulse encoder input pulse after a change in rotational direction is not counted)	0 to 1 1	Ind: 4 FS=0 Type: O2	P052 = 3 P051 = 40 Offline
P452 * BDS (G145)	**Source for "Reset position counter" command** [SW 1.9 and later] Selection of binector to control **resetting of the position counter**. 0 = binector B0000 1 = binector B0001 etc.	All binector numbers 1	Ind: 2 FS=0 Type: L2	P052 = 3 P051 = 40 Offline
P453 * BDS (G145)	**Source for "Enable zero marker counter" command** [SW 1.9 and later] Selection of binector to control **enabling of the zero marker counter** 0 = binector B0000 1 = binector B0001 etc.	All binector numbers 1	Ind: 2 FS=1 Type: L2	P052 = 3 P051 = 40 Offline

11.21 Connector selector switches

(see also Section 8, Function Diagram Sheet G124)

P455 * (G124)	**Source for inputs of connector selector switch 1** [SW 1.9 and later] Selection of connectors for the input signals for connector selector switch 1. 0 = connector K0000 1 = connector K0001 etc.	All connector numbers 1	Ind: 3 FS=0 Type: L2	P052 = 3 P051 = 40 Offline
P456 * (G124)	**Source for control of connector selector switch 1** [SW 1.9 and later] Selection of binectors to control connector selector switch 1. 0 = binector B0000 1 = binector B0001 etc.	All binector numbers 1	Ind: 2 FS=0 Type: L2	P052 = 3 P051 = 40 Offline
P457 * (G124)	**Source for inputs of connector selector switch 2** [SW 1.9 and later] Selection of connectors for the input signals for connector selector switch 2. 0 = connector K0000 1 = connector K0001 etc.	All connector numbers 1	Ind: 3 FS=0 Type: L2	P052 = 3 P051 = 40 Offline
P458 * (G124)	**Source for control of connector selector switch 2** [SW 1.9 and later] Selection of binectors to control connector selector switch 2. 0 = binector B0000 1 = binector B0001 etc.	All binector numbers 1	Ind: 2 FS=0 Type: L2	P052 = 3 P051 = 40 Offline

PNU	Description	Value range [Unit] Steps	No. indices Factory setting Type	See Change (Access / Status)

11.22 Motorized potentiometer

(see also Section 8, Sheet G126)

P460 * FDS (G126)	**Control word for motorized potentiometer ramp-function generator** 0 The motorized potentiometer ramp generator is bypassed in Automatic mode (same effect as for P462 and P463 = 0.01, i.e. the generator output is made to follow the automatic setpoint without delay) 1 Motorized potentiometer ramp generator is active in Manual and Automatic modes	0 to 1 1	Ind: 4 FS=1 Type: O2	P052 = 3 P051 = 40 Offline
P461 * FDS (G126)	**Source for setpoint in Automatic mode** Selection of the connector to be applied as the **Automatic setpoint** to the ramp-function generator in the motorized potentiometer 0 = connector K0000 1 = connector K0001 etc.	All connector numbers 1	Ind: 4 FS=0 Type: L2	P052 = 3 P051 = 40 Offline
P462 FDS (G126)	**Ramp-up time for motorized potentiometer**	0.01 to 300.00 [s] 0.01s	Ind: 4 FS=10.00 Type: O2	P052 = 3 P051 = 40 Online
P463 FDS (G126)	**Ramp-down time for motorized potentiometer**	0.01 to 300.00 [s] 0.01s	Ind: 4 FS=10.00 Type: O2	P052 = 3 P051 = 40 Online
P464 FDS (G126)	**Time difference for dy/dt** Setting of dt for the output of dy/dt at a connector, i.e. on K0241 the change in the output quantity (K0240) is output within the time set in P464, multiplied by the factor set in P465 (unit of time setting is [s] if P465=0 or [min] if P465=1) Example: - The ramp-function generator is currently ramping up with a ramp-up time of P462=5s, i.e. a ramp-up operation from y=0% to y=100% takes 5s. - A time difference dt of P464=2s is set. - ⇒ A dy/dt of 40% appears at connector K0241 since the dy within the set dt of 2 s equals (2s/5s)*100%..	0.01 to 300.00 [s] 0.01s	Ind: 4 FS=10.00 Type: O2	P052 = 3 P051 = 40 Online
P465 * FDS (G126)	**Factor of expansion for motorized potentiometer** The effective ramp-up time, ramp-down time or time difference for dy/dt is the product of the time setting in parameter P462, P463 and P464 respectively, multiplied by the factor set in this parameter. 0 Parameters P462, P463 and P464 are multiplied by a factor of 1 1 Parameters P462, P463 and P464 are multiplied by a factor of 60	0 to 1 1	Ind: 4 FS=0 Type: O2	P052 = 3 P051 = 40 Online
P466 * FDS (G126)	**Source for motorized potentiometer setting value** Selection of the connector to be injected as the **motorized potentiometer setting value** 0 = connector K0000 1 = connector K0001 etc.	All connector numbers 1	Ind: 4 FS=0 Type: L2	P052 = 3 P051 = 40 Offline
P467 FDS (G126)	**Motorized potentiometer starting value** Starting value of motorized potentiometer after ON when P473 = 0	-199.9 to 199.9 [%] 0.1%	Ind: 4 FS=0.0 Type: I2	P052 = 3 P051 = 40 Online
P468 FDS (G126)	**Setpoint for "Raise motorized potentiometer"** Motorized potentiometer manual operation: Setpoint for "Raise motorized potentiometer"	-199.99 to 199.99 [%] 0.01%	Ind: 4 FS=100.00 Type: I2	P052 = 3 P051 = 40 Online
P469 FDS (G126)	**Setpoint for "Lower motorized potentiometer"** Motorized potentiometer manual operation: Setpoint for "Lower motorized potentiometer"	-199.99 to 199.99 [%] 0.01%	Ind: 4 FS=-100.00 Type: I2	P052 = 3 P051 = 40 Online
P470 * BDS (G126)	**Source for clockwise/counter-clockwise switchover** Selection of binector to control **"Clockwise/counter-clockwise switchover"** ("0" state = clockwise). 0 = binector B0000 1 = binector B0001 etc.	All binector numbers 1	Ind: 2 FS=0 Type: L2	P052 = 3 P051 = 40 Offline

PNU	Description	Value range [Unit] Steps	No. indices Factory setting Type	See Change (Access / Status)
P471 * BDS (G126)	**Source for manual/automatic switchover** Selection of binector to control **"Manual/automatic switchover"** ("0" state = manual). 0 = binector B0000 1 = binector B0001 etc.	All binector numbers 1	Ind: 2 FS=0 Type: L2	P052 = 3 P051 = 40 Offline
P472 * BDS (G126)	**Source for set motorized potentiometer** Selection of binector to control **"Set motorized potentiometer"** ("0" to "1" transition = set motorized potentiometer). 0 = binector B0000 1 = binector B0001 etc.	All binector numbers 1	Ind: 2 FS=0 Type: L2	P052 = 3 P051 = 40 Offline
P473 * FDS (G126)	**Storage of output value** 0 No storage of output value: The output is set to 0 in all operating states of >o5. The starting point after ON is determined by P467 (MOP starting value). 1 Non-volatile storage of output value: The output value remains stored in all operating states and after voltage disconnection or failure. The last value stored is output again after voltage recovery/reconnection.	0 to 1 1	Ind: 4 FS=0 Type: O2	P052 = 3 P051 = 40 Offline

11.23 Oscillation

Function:
Parameters P480 to P483 define the waveshape of a rectangular signal (oscillation setpoint K0203). The value set in P480 determines the signal level for the time period set in P481 and the value set in P482 the signal level for the time period set in P483.
Oscillation: Selected in P485. The free-running rectangular signal is switched through to the output K0208.

P480 FDS (G128)	**Oscillation setpoint 1**	-199.9 to 199.9 [%] 0.1% of maximum speed	Ind: 4 FS=5.0 Type: I2	P052 = 3 P051 = 40 Online
P481 FDS (G128)	**Oscillation time 1**	0.1 to 300.0 [s] 0.1s	Ind: 4 FS=2.0 Type: O2	P052 = 3 P051 = 40 Online
P482 FDS (G128)	**Oscillation setpoint 2**	-199.9 to 199.9 [%] 0.1% of maximum speed	Ind: 4 FS=-0.0 Type: I2	P052 = 3 P051 = 40 Online
P483 FDS (G128)	**Oscillation time 2**	0.1 to 300.0 [s] 0.1s	Ind: 4 FS=2.0 Type: O2	P052 = 3 P051 = 40 Online
P484 * FDS (G128)	**Source for standard setpoint** Selection of connector to be injected as the output value when the "Oscillation" function is not selected 0 = connector K0000 1 = connector K0001 etc.	All connector numbers 1	Ind: 4 FS=209 Type: L2	P052 = 3 P051 = 40 Offline
P485 * BDS (G128)	**Source for oscillation selection** Selection of binector to control activation of the "Oscillation" function (log. "1" state = oscillation active) 0 = binector B0000 1 = binector B0001 etc.	All binector numbers 1	Ind: 2 FS=0 Type: L2	P052 = 3 P051 = 40 Offline

PNU	Description	Value range [Unit] Steps	No. indices Factory setting Type	See Change (Access / Status)

11.24 Temperature sensor inputs

(see also Section 8, Sheet G185)

CAUTION!
The encoders for measuring and monitoring the motor temperature must be safely isolated from the power circuit.

P490 (G185)	**Selection of temperature sensor for monitoring of motor temperature** i001: Temperature sensor at terminals 22 / 23: i002: Temperature sensor at terminals 204 / 205: Settings: 0 No temperature sensor 1 KTY84 2 PTC thermistor with R=600Ω 1) 2) 3 PTC thermistor with R=1200Ω 1) 2) 4 PTC thermistor with R=1330Ω 1) 2) 5 PTC thermistor with R=2660Ω 1) 2) 1) PTC thermistor according to DIN 44081 / 44082 with specified R at rated response temperature, 1330Ω on Siemens motors (setting 4 must be selected). When a PTC thermistor is selected as the temperature sensor, it is not necessary to set parameters P491 and P492 (alarm and trip temperatures). These two temperatures are predetermined by the type of PTC thermistor installed. Whether an alarm or fault is output when the operating point of the PTC thermistor is reached depends on how the relevant input is parameterized (P493.F or P494.F). 2) R_n = resistance at switching point when R < R_n: B0184 or B0185 = 0 when R > R_n: B0184 or B0185 = 1	0 to 5 1	Ind: 2 FS=1 Type: O2	P052 = 3 P051 = 40 Online
P491 FDS (G185)	**Monitoring of motor temperature: Alarm temperature** Operative only when P490.x=1.	0 to 200 [°C] 1°C	Ind: 4 FS=20 Type: O2	P052 = 3 P051 = 40 Online
P492 FDS (G185)	**Monitoring of motor temperature: Trip temperature** Operative only when P490.x=1.	0 to 200 [°C] 1°C	Ind: 4 FS=0 Type: O2	P052 = 3 P051 = 40 Online
P493 * FDS (G185)	**Motor temperature 1 (temperature sensor at terminals 22 / 23): Tripping of alarm or fault message** Motor temperature grasped with PTC thermistor KTY64: 0 Monitoring deactivated 1 Alarm (A029) at temperature > P491 2 Fault message (F029) at temperature > P492 3 Alarm (A029) at temperature > P491 and fault message (F029) at temperature > P492 Motor temperature grasped with PTC thermistor 0 Monitoring deactivated 1 Alarm message (A029) when operating point of PTC thermistor is reached 2 Fault message (F029) when operating point of PTC thermistor is reached 3 Illegal setting	0 to 3 1	Ind: 4 FS=1 Type: O2	P052 = 3 P051 = 40 Offline

PNU	Description	Value range [Unit] Steps	No. indices Factory setting Type	See Change (Access / Status)
P494 * FDS (G185)	**Motor temperature 2 (temperature sensor at terminals 204 / 205): Tripping of alarm or fault message** Motor temperature grasped with KTY84 0 Monitoring deactivated 1 Alarm (A029) at temperature > P491 2 Fault message (F029) at temperature > P492 3 Alarm (A029) at temperature > P491 and fault message (F029) at temperature > P492 Motor temperature grasped with PTC thermistor 0 Monitoring deactivated 1 Alarm message (A029) when operating point of PTC thermistor is reached 2 Fault message (F029) when operating point of PTC thermistor is reached 3 Illegal setting	0 to 3 1	Ind: 4 FS=1 Type: O2	P052 = 3 P051 = 40 Offline

11.25 Binary inputs

(see also Section 8, Sheet G186)

P495 * FDS (G186)	**Alarm A025 / Fault F025 from terminal 211** 0 Terminal 211 is not scanned: no tripping of alarm or fault message 1 Terminal 211 is scanned: alarm (A025) if 0 signal 2 Terminal 211 is scanned: fault message (F025) if 0 signal	0 to 2 1	Ind: 4 FS=0 Type: O2	P052 = 3 P051 = 40 Offline
P496 * FDS (G186)	**Alarm A025 / Fault F026 from terminal 212** 0 Terminal 212 is not scanned: no tripping of alarm or fault message 1 Terminal 212 is scanned: alarm (A026) if 1 signal 2 Terminal 212 is scanned: fault message (F026) if 1 signal	0 to 2 1	Ind: 4 FS=0 Type: O2	P052 = 3 P051 = 40 Offline
P497 * FDS (G186)	**Alarm A027 / Fault F027 from terminal 213** 0 Terminal 213 is not scanned: no tripping of alarm or fault message 1 Terminal 213 is scanned: alarm (A027) if 0 signal 2 Terminal 213 is scanned: fault message (F027) if 0 signal	0 to 2 1	Ind: 4 FS=0 Type: O2	P052 = 3 P051 = 40 Offline
P498 * FDS (G186)	**Alarm A028 / Fault F028 from terminal 214** 0 Terminal 214 is not scanned: no tripping of alarm or fault message 1 Terminal 214 is scanned: alarm (A028) if 0 signal 2 Terminal 214 is scanned: fault message (F028) if 0 signal	0 to 2 1	Ind: 4 FS=0 Type: O2	P052 = 3 P051 = 40 Offline

11.26 Configuring of torque shell input

P500 * BDS (G160)	**Source for torque setpoint for slave drive** Selection of the connector to be injected as the **torque setpoint for a slave drive** 0 = connector K0000 1 = connector K0001 etc.	All connector numbers 1	Ind: 2 FS=203 Type: L2	P052 = 3 P051 = 40 Offline
P501 * BDS (G160)	**Source for additional torque setpoint** Selection of connector to be injected as the **additional torque setpoint** 0 = connector K0000 1 = connector K0001 etc.	All connector numbers 1	Ind: 2 FS=0 Type: L2	P052 = 3 P051 = 40 Offline

PNU	Description	Value range [Unit] Steps	No. indices Factory setting Type	See Change (Access / Status)
P502 * (G152)	**Source for value to be added to speed controller output** Selection of connector to be injected as the value to be added to the speed controller output (in addition to friction and moment of inertia compensation) 0 = connector K0000 1 = connector K0001 etc.	All connector numbers 1	Ind: None FS=0 Type: L2	P052 = 3 P051 = 40 Offline
P503 FDS (G160)	**Multiplier for torque setpoint in slave mode**	-300.00 to 300.00 [%] 0.01%	Ind: 4 FS=100.00 Type: I2	P052 = 3 P051 = 40 Online

11.27 Speed limiting controller

(see also Section 8, Sheet G160)

The output of the speed limiting controller comprises a positive (K0136) and a negative (K0137) torque limit. These limits are applied to the torque limitation.

P509 * (G160)	**Source for input quantity (n-act) of speed limiting controller** 0 = connector K0000 1 = connector K0001 etc.	All connector numbers 1	Ind: None FS=167 Type: L2	P052 = 3 P051 = 40 Offline
P510 * (G160)	**Source for pos. torque limit of speed limiting controller** Selection of the connector to be injected as the **limit value for torque limitation 1** 0 = connector K0000 1 = connector K0001 etc.	All connector numbers 1	Ind: None FS=2 Type: L2	P052 = 3 P051 = 40 Offline
P511 * (G160)	**Source for neg. torque limit of speed limiting controller** Selection of the connector to be injected as the **limit value for torque limitation 2** 0 = connector K0000 1 = connector K0001 etc.	All connector numbers 1	Ind: None FS=4 Type: L2	P052 = 3 P051 = 40 Offline
P512 FDS (G160)	**Maximum speed in positive direction of rotation**	0.0 to 199.9 [%] 0.1% of rated speed	Ind: 4 FS=105.0 Type: O2	P052 = 3 P051 = 40 Online
P513 FDS (G160)	**Maximum speed in negative direction of rotation**	-199.9 to 0.0 [%] 0.1% of rated speed	Ind: 4 FS=-105.0 Type: I2	P052 = 3 P051 = 40 Online
P515 FDS (G160)	**P gain of speed limiting controller**	0.10 to 200.00 0.01	Ind: 4 FS=3.00 Type: O2	P052 = 3 P051 = 40 Online

11.28 Friction compensation

(see also Section 8, Sheet G153)

Parameters P520 to P530 are the motor current and torque setpoint required for a stationary input signal (factory setting: speed controller actual value K0179) of 0%, 10% to 100% of the maximum value (in steps of 10%).
These parameters are intermediate points along the friction curve. Depending on P170 (0 or 1) they are either a current or a torque setpoint. The intermediate points are interpolated linearly during which the output of the friction compensation assumes the sign of the input signal.

P530 is specified by the friction compensation even for input signals >100% of the maximum signal.
During operation in both directions we recommend leaving P520 at 0.0% in order to avoid current vibration at 0% of the input signal.

PNU	Description	Value range [Unit] Steps	No. indices Factory setting Type	See Change (Access / Status)
P519 * (G153)	**Source for input signal of the friction compensation** [SW 2.0 and later] Selection of the input signals that are added and led to the input of the friction compensation. i001 Input signal, with sign i002 Input signal with absolute value generator Settings: 0 = Connector K0000 1 = Connector K0001 etc.	All connector numbers 1	Ind: 2 FS= i001: 179 i002: 0 Type: L2	P052 = 3 P051 = 40 Offline
P520 FDS (G153)	**Friction at 0% speed** Setting as % of converter rated current or rated torque	0.0 to 100.0 [%] 0.1%	Ind: 4 FS=0.0 Type: O2	P052 = 3 P051 = 40 Online
P521 FDS (G153)	**Friction at 10% speed** Setting as % of converter rated current or rated torque	0.0 to 100.0 [%] 0.1%	Ind: 4 FS=0.0 Type: O2	P052 = 3 P051 = 40 Online
P522 FDS (G153)	**Friction at 20% speed** Setting as % of converter rated current or rated torque	0.0 to 100.0 [%] 0.1%	Ind: 4 FS=0.0 Type: O2	P052 = 3 P051 = 40 Online
P523 FDS (G153)	**Friction at 30% speed** Setting as % of converter rated current or rated torque	0.0 to 100.0 [%] 0.1%	Ind: 4 FS=0.0 Type: O2	P052 = 3 P051 = 40 Online
P524 FDS (G153)	**Friction at 40% speed** Setting as % of converter rated current or rated torque	0.0 to 100.0 [%] 0.1%	Ind: 4 FS=0.0 Type: O2	P052 = 3 P051 = 40 Online
P525 FDS (G153)	**Friction at 50% speed** Setting as % of converter rated current or rated torque	0.0 to 100.0 [%] 0.1%	Ind: 4 FS=0.0 Type: O2	P052 = 3 P051 = 40 Online
P526 FDS (G153)	**Friction at 60% speed** Setting as % of converter rated current or rated torque	0.0 to 100.0 [%] 0.1%	Ind: 4 FS=0.0 Type: O2	P052 = 3 P051 = 40 Online
P527 FDS (G153)	**Friction at 70% speed** Setting as % of converter rated current or rated torque	0.0 to 100.0 [%] 0.1%	Ind: 4 FS=0.0 Type: O2	P052 = 3 P051 = 40 Online
P528 FDS (G153)	**Friction at 80% speed** Setting as % of converter rated current or rated torque	0.0 to 100.0 [%] 0.1%	Ind: 4 FS=0.0 Type: O2	P052 = 3 P051 = 40 Online
P529 FDS (G153)	**Friction at 90% speed** Setting as % of converter rated current or rated torque	0.0 to 100.0 [%] 0.1%	Ind: 4 FS=0.0 Type: O2	P052 = 3 P051 = 40 Online
P530 FDS (G153)	**Friction at 100% speed and higher** Setting as % of converter rated current or rated torque	0.0 to 100.0 [%] 0.1%	Ind: 4 FS=0.0 Type: O2	P052 = 3 P051 = 40 Online

11.29 Compensation of moment of inertia (dv/dt injection)

(see also Section 8, Sheet G153)

P540 FDS (G153)	**Acceleration time** The acceleration time is the time which would be necessary to accelerate the drive with 100% converter rated current from 0% to 100% of maximum speed (where no friction is present). It is a measure of the moment of inertia on the motor shaft.	0.00 to 650.00 [s] 0.01s	Ind: 4 FS=0.00 Type: O2	P052 = 3 P051 = 40 Online
P541 FDS (G153)	**P gain of acceleration** Proportional gain for "SAD-dependent acceleration" function (see also parameter P543)	0.00 to 650.00 0.01	Ind: 4 FS=0.00 Type: O2	P052 = 3 P051 = 40 Online

PNU	Description	Value range [Unit] Steps	No. indices Factory setting Type	See Change (Access / Status)
P542 FDS (G136)	**Time difference for dy/dt of ramp-function generator** Ramp-function generator: Setting of dt for the output of dy/dt at a connector, i.e. at K0191, the change in the output quantity of the ramp-function generator (K0190) is output within the period set in P542 Example: - The ramp-function generator is currently ramping up with a ramp-up time of P311=5s, i.e. a ramp-up operation from y=0% to y=100% takes 5s. - A time difference dt of P542=2s is set. - ⇒ A dy/dt of 40% appears at connector K0191 since the dy within the set dt of 2 s equals (2s/5s)*100%.. (see also parameter P330)	0.01 to 300.00 [s] 0.01s	Ind: 4 FS=0.01 Type: O2	P052 = 3 P051 = 40 Online
P543 FDS (G153)	**Threshold for SAD-dependent acceleration** With respect to the SAD-dependent acceleration function, only the component of the speed controller setpoint/actual value difference which has an absolute value in excess of the threshold set in this parameter is switched through (see also parameter P541). 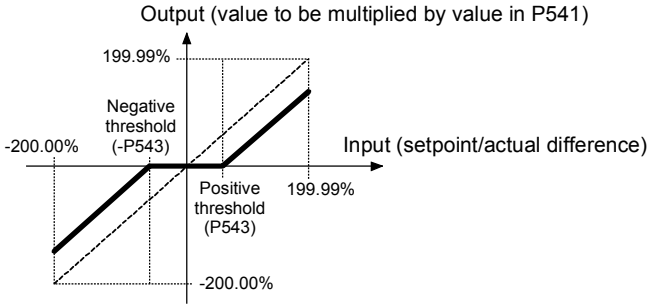	0.00 to 100.00 [%] 0.01% of maximum speed	Ind: 4 FS=0.00 Type: O2	P052 = 3 P051 = 40 Online
P546 FDS (G153)	**Filter time for compensation of moment of inertia**	0 to 10000 [ms] 1ms	Ind: 4 FS=0 Type: O2	P052 = 3 P051 = 40 Online

PNU	Description	Value range [Unit] Steps	No. indices Factory setting Type	See Change (Access / Status)

11.30 Speed controller

(see also Section 8, Sheet G151)

further parameters for the speed controller P200 - P234

Speed controller adaptation

The parameters of the speed controller (Kp, Tn, droop) can be altered as a function of any connector to adapt the speed controller optimally to a changing controlled system.
The diagrams below show the active P gain, the active Integration time and the active droop depending on the value of the set connector.

Adaptation of the P gain:

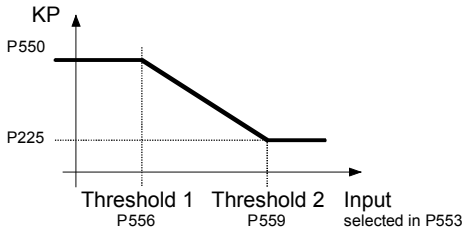

Adaptation of the integration time:

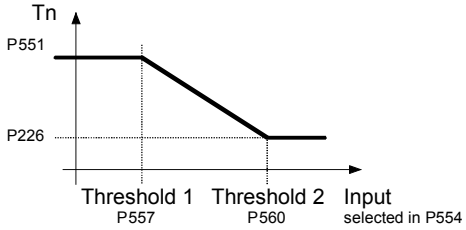

Adaptation of the droop:

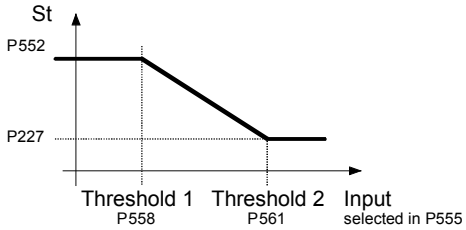

For parameter pairs P225/P550, P226/P551 and P227/P552 all values can be set completely mutually independently, e.g., P550 does not have to be greater than P225. The above diagrams show only the effect of the individual parameters.
Threshold 1 must always be set smaller than threshold 2, otherwise the fault message F058 is activated.

P550 FDS (G151)	**P gain in adaptation range** Maximum value of KP if influencing quantity ≤ threshold 1	0.10 to 200.00 0.01	Ind: 4 FS=3.00 Type: O2	P052 = 3 P051 = 40 Online
P551 FDS (G151)	**Integration time in the adaptation range** [SW 1.7 and later] Value of Tn, if Influencing quantity ≤ Threshold 1	0.010 to 10.000 [s] 0.001s	Ind: 4 FS=0.200 Type: O2	P052 = 3 P051 = 40 Online
P552 FDS (G151)	**Droop in the adaptation range** [SW 1.7 and later] Value of droop, if Influencing quantity ≤ Threshold 1	0.0 to 10.0 [%] 0.1%	Ind: 4 FS=0.0 Type: O2	P052 = 3 P051 = 40 Online
P553 * FDS (G151)	**Source for influencing quantity for adaptation** Selection of the connector to be injected as the influencing quantity for adaptation of the n controller P gain 0 = connector K0000 1 = connector K0001 etc.	All connector numbers 1	Ind: 4 FS=0 Type: L2	P052 = 3 P051 = 40 Offline
P554 * FDS (G151)	**Source for the Influencing quantity of the Tn-adaptation** [SW 1.7 and later] Selection of which connector is connected at the influencing quantity for adaptation of the n controllers integration time 0 = connector K0000 1 = connector K0001 etc.	All connector numbers 1	Ind: 4 FS=0 Type: L2	P052 = 3 P051 = 40 Offline

PNU	Description	Value range [Unit] Steps	No. indices Factory setting Type	See Change (Access / Status)
P555 * FDS (G151)	**Source for the Influencing quantity of the droop adaptation** [SW 1.7 and later] Selection of which connector is connected at the influencing quantity for adaptation of the n controllers droop 0 = Connector K0000 1 = Connector K0001 etc.	All connector numbers 1	Ind: 4 FS=0 Type: L2	P052 = 3 P051 = 40 Offline
P556 FDS (G151)	**Adaptation of n controller P gain: Threshold 1**	0.00 to 100.00 [%] 0.01%	Ind: 4 FS=0.00 Type: O2	P052 = 3 P051 = 40 Online
P557 FDS (G151)	**Adaptation n controller integration time: Threshold 1** [SW 1.7 and later]	0.00 to 100.00 [%] 0.01%	Ind: 4 FS=0.00 Type: O2	P052 = 3 P051 = 40 Online
P558 FDS (G151)	**Adaptation n controller droop: Threshold 1** [SW 1.7 and later]	0.00 to 100.00 [%] 0.01%	Ind: 4 FS=0.00 Type: O2	P052 = 3 P051 = 40 Online
P559 FDS (G151)	**Adaptation of n controller P gain: Threshold 2**	0.00 to 100.00 [%] 0.01%	Ind: 4 FS=0.00 Type: O2	P052 = 3 P051 = 40 Online
P560 FDS (G151)	**Adaptation n controller integration time: Threshold 2** [SW 1.7 and later]	0.00 to 100.00 [%] 0.01%	Ind: 4 FS=0.00 Type: O2	P052 = 3 P051 = 40 Online
P561 FDS (G151)	**Adaptation n controller droop: Threshold 2** [SW 1.7 and later]	0.00 to 100.00 [%] 0.01%	Ind: 4 FS=0.00 Type: O2	P052 = 3 P051 = 40 Online

Speed controller - speed droop limitation				
P562 FDS (G151)	**Positive speed droop limitation**	0.00 to 199.99 [%] 0.01%	Ind: 4 FS=100.00 Type: O2	P052 = 3 P051 = 40 Online
P563 FDS (G151)	**Negative speed droop limitation**	-199.99 to 0.00 [%] 0.01%	Ind: 4 FS=-100.00 Type: I2	P052 = 3 P051 = 40 Online

11.31 Input quantities for signals

(see also Section 8, Sheets G187 and G188)

P590 * (G187)	**Source for setpoint of "nset = nact signal 1"** Setpoint/actual value deviation signal: Selection of connector to be injected as input quantity "n_{set}" for the setpoint/actual value deviation signal. 0 = connector K0000 1 = connector K0001 etc.	All connector numbers 1	Ind: None FS=174 Type: L2	P052 = 3 P051 = 40 Offline
P591 * (G187)	**Source for actual value of "n-set = n-act signal 1"** Setpoint/actual value deviation signal: Selection of connector to be injected as input quantity "n_{act}" for the setpoint/actual value deviation signal. 0 = connector K0000 1 = connector K0001 etc.	All connector numbers 1	Ind: None FS=167 Type: L2	P052 = 3 P051 = 40 Offline
P592 * (G187)	**Source for actual value of "n < $n_{comp.}$ signal"** n < $n_{comp.}$ signal: Selection of connector to be injected as input quantity (n) for the n < $n_{comp.}$ signal. 0 = connector K0000 1 = connector K0001 etc.	All connector numbers 1	Ind: None FS=167 Type: L2	P052 = 3 P051 = 40 Offline
P593 * (G188)	**Source for actual value of "n < n_{min} signal"** n < n_{min} signal: Selection of connector to be injected as input quantity (n) for the n < n_{min} signal. 0 = connector K0000 1 = connector K0001 etc.	All connector numbers 1	Ind: None FS=167 Type: L2	P052 = 3 P051 = 40 Offline

PNU	Description	Value range [Unit] Steps	No. indices Factory setting Type	See Change (Access / Status)
P594 * (G188)	**Source for input quantity of "Polarity signal"** Polarity signal of speed setpoint: Selection of connector to be injected as input quantity "n_{set}" for the polarity signal of the speed setpoint. 0 = connector K0000 1 = connector K0001 etc.	All connector numbers 1	Ind: None FS=170 Type: L2	P052 = 3 P051 = 40 Offline
P595 * (G188)	**Source for actual value of "Overspeed signal"** Overspeed signal: Selection of connector to be injected as input quantity "n_{act}" for the overspeed signal. 0 = connector K0000 1 = connector K0001 etc.	All connector numbers 1	Ind: None FS=167 Type: L2	P052 = 3 P051 = 40 Offline
P596 * (G187)	**Source for setpoint of "nset = nact signal 2"** [SW 1.9 and later] Setpoint/actual value deviation signal: Selection of connector to be injected as input quantity "n_{set}" for the setpoint/actual value deviation signal. 0 = connector K0000 1 = connector K0001 etc.	All connector numbers 1	Ind: None FS=174 Type: L2	P052 = 3 P051 = 40 Offline
P597 * (G187)	**Source for actual value of "nset = nact signal 2"** [SW 1.9 and later] Setpoint/actual value deviation signal: Selection of connector to be injected as input quantity "n_{act}" for the setpoint/actual value deviation signal. 0 = connector K0000 1 = connector K0001 etc.	All connector numbers 1	Ind: None FS=167 Type: L2	P052 = 3 P051 = 40 Offline

11.32 Configuring of closed-loop control

Setting values for configuring of torque shell				
P600 * (G163)	**Source for gating unit input** i001 to i004: Selects which connectors are applied as the **gating unit input .** All four values are added. Settings: 0 = connector K0000 1 = connector K0001 etc.	All connector numbers 1	Ind: 4 FS= i001: 102 i002: 0 i003: 0 i004: 0 Typ: L2	P052 = 3 P051 = 40 Offline
P601 * (G160) (G161) (G162)	**Source for current controller setpoint** i001,i002 Speed limiting controller: Selection of connectors to be injected as **input quantities for the speed limiting controller**. Both values are added. i003,i004 Current limitation: Selection of connectors to be injected as **current controller setpoint** (before current limitation). Both values are added. i005,i006 Current control: [SW 1.8 and later] Selection of which connectors are connected as the **current controller setpoint** (before current controller). The two values are added. The magnitude is formed from the value selected with index 6. Settings: 0 = connector K0000 1 = connector K0001 etc.	All connector numbers 1	Ind: 6 FS= i001: 141 i002: 0 i003: 134 i004: 0 i005: 125 i006: 0 Type: L2	P052 = 3 P051 = 40 Offline

PNU	Description	Value range [Unit] Steps	No. indices Factory setting Type	See Change (Access / Status)
P602 * (G162)	**Source for actual current controller value** Selection of connector to be injected as **current controller actual value** 0 = connector K0000 1 = connector K0001 etc.	All connector numbers 1	Ind: None FS=117 Type: L2	P052 = 3 P051 = 40 Offline
P603 * (G161)	**Source for variable current limit in torque direction I** i001..i004 Selection of connector to be injected as variable current limit in torque direction I Normalization: +100% corresponds to P100*P171 i005 Selection of connector to be injected as current limit in torque direction I with Fast Stop or Shutdown Normalization: +100% corresponds to P100*P171 i006 Selection of connector to be injected as variable current limit in torque direction I Normalization: +100% corresponds to r072.002 [can be set in SW 1.9 and later] i007 Selection of connector to be injected as current limit in torque direction I with Emergency Stop or Shutdown Normalization: +100% corresponds to r072.002 [can be set in SW 1.9 and later] Settings: 0 = connector K0000 1 = connector K0001 etc.	All connector numbers 1	Ind: 7 FS= i001: 1 i002: 1 i003: 1 i004: 1 i005: 1 i006: 2 i007: 2 Type: L2	P052 = 3 P051 = 40 Offline
P604 * (G161)	**Source for variable current limit in torque direction II** i001..i004 Selection of connector to be injected as variable current limit in torque direction II Normalization: -100% corresponds to P100*P172 i005 Selection of connector to be injected as current limit in torque direction II with Fast Stop or Shutdown Normalization: -100% corresponds to P100*P172 i006 Selection of connector to be injected as variable current limit in torque direction II Normalization: -100% corresponds to r072.002 [can be set in SW 1.9 and later] i007 Selection of connector to be injected as current limit in torque direction II with Emergency Stop or Shutdown Normalization: -100% corresponds to r072.002 [can be set in SW 1.9 and later] Settings: 0 = connector K0000 ... 8 = connector K0008 9 = value as set in parameter P603.ixx ∗ (−1) 10 = connector K0010 etc.	All connector numbers 1	Ind: 7 FS=9 Type: L2	P052 = 3 P051 = 40 Offline

PNU	Description	Value range [Unit] Steps	No. indices Factory setting Type	See Change (Access / Status)
P605 * (G160)	**Source for variable positive torque limit** Torque limitation: Selection of connectors to be injected as the **variable positive torque limit** i001..i004 Normalization: 100% of the connector value corresponds to the positive system torque limit according to I_a=P171 i005 Normalization: 100% of the connector value corresponds to the positive torque limit according to Ia=r072.002 [can be set in SW 1.9 and later] 0 = connector K0000 1 = connector K0001 etc.	All connector numbers 1	Ind: 5 FS=2 Type: L2	P052 = 3 P051 = 40 Offline
P606 * (G160)	**Source for variable negative torque limit** Torque limitation: Selection of connectors to be injected as the **variable negative torque limit** i001..i004 Normalization: 100% of the connector value corresponds to the negative system torque limit according to Ia=P172 i005 Normalization: 100% of the connector value corresponds to the negative torque limit according to Ia=r072.002 [can be set in SW 1.9 and later] 0 = connector K0000 ... 8 = connector K0008 9 = value as set in parameter P605 ∗ (−1) 10 = connector K0010 etc.	All connector numbers 1	Ind: 5 FS=9 Type: L2	P052 = 3 P051 = 40 Offline
P607 * BDS (G160)	**Source for torque setpoint for master drive** Torque limitation: Selection of connector to be injected as the torque setpoint for a master drive 0 = connector K0000 1 = connector K0001 etc.	All connector numbers 1	Ind: 2 FS=148 Type: L2	P052 = 3 P051 = 40 Offline
Speed controller				
P609 * (G151)	**Source for actual speed controller value** Selection of connector to be injected as the **actual speed controller value** when P083=4 0 = connector K0000 1 = connector K0001 etc.	All connector numbers 1	Ind: None FS=0 Type: L2	P052 = 3 P051 = 40 Offline
Configuring of injection of acceleration value				
P619 * (G153)	**Source for acceleration injection value** Selection of connector to be applied as the **acceleration injection value** 0 = connector K0000 1 = connector K0001 etc.	All connector numbers 1	Ind: None FS=191 Type: L2	P052 = 3 P051 = 40 Offline

PNU	Description	Value range [Unit] Steps	No. indices Factory setting Type	See Change (Access / Status)
Speed controller				
Speed controller, setpoint/actual value deviation				
Function: The connectors selected in parameters P621 and P622 are added and those selected in P623 and 624 subtracted				
P620 * (G152)	**Source for speed controller setpoint/actual value deviation** Selection of connector to be injected as the control deviation 0 = connector K0000 1 = connector K0001 etc.	All connector numbers 1	Ind: None FS=165 Type: L2	P052 = 3 P051 = 40 Offline
P621 * (G152)	**Source for speed controller setpoint** 0 = connector K0000 1 = connector K0001 etc.	All connector numbers 1	Ind: None FS=176 Type: L2	P052 = 3 P051 = 40 Offline
P622 * (G152)	**Source for speed controller setpoint** 0 = connector K0000 1 = connector K0001 etc.	All connector numbers 1	Ind: None FS=174 Type: L2	P052 = 3 P051 = 40 Offline
P623 * (G152)	**Source for actual speed controller value** 0 = connector K0000 1 = connector K0001 etc.	All connector numbers 1	Ind: None FS=179 Type: L2	P052 = 3 P051 = 40 Offline
P624 * (G152)	**Source for actual speed controller value** 0 = connector K0000 1 = connector K0001 etc.	All connector numbers 1	Ind: None FS=0 Type: L2	P052 = 3 P051 = 40 Offline
Speed controller: Filtering of setpoint and actual value, band-stop filters				
P625 * FDS (G152)	**Source for speed controller setpoint** Selection of connector to be injected as the input signal for speed setpoint filtering 0 = connector K0000 1 = connector K0001 etc.	All connector numbers 1	Ind: 4 FS=170 Type: L2	P052 = 3 P051 = 40 Offline
P626 * FDS (G152)	**Source for actual speed controller value** Selection of connector to be injected as the input signal for actual speed value filtering 0 = connector K0000 1 = connector K0001 etc.	All connector numbers 1	Ind: 4 FS=167 Type: L2	P052 = 3 P051 = 40 Offline
P627 * (G152)	**Source for input of D element** Selection of connector to be injected as the input signal for the D element 0 = connector K0000 1 = connector K0001 etc.	All connector numbers 1	Ind: None FS=178 Type: L2	P052 = 3 P051 = 40 Offline
P628 * (G152)	**Source for band-stop filter 1** Selection of connector to be injected as the input signal for band-stop filter 1 0 = connector K0000 1 = connector K0001 etc.	All connector numbers 1	Ind: None FS=179 Type: L2	P052 = 3 P051 = 40 Offline
P629 * (G152)	**Source for band-stop filter 2** Selection of connector to be injected as the input signal for band-stop filter 2 0 = connector K0000 1 = connector K0001 etc.	All connector numbers 1	Ind: None FS=177 Type: L2	P052 = 3 P051 = 40 Offline

PNU	Description	Value range [Unit] Steps	No. indices Factory setting Type	See Change (Access / Status)
Speed controller droop				
P630 * (G151)	**Source for influencing quantity for speed droop** Selection of connector to be injected as the influencing quantity 0 = connector K0000 1 = connector K0001 etc.	All connector numbers 1	Ind: None FS=162 Type: L2	P052 = 3 P051 = 40 Offline
Setting the speed controller I component				
Function: When the binector selected in P695 switches from log. "0" to log. "1", the I component of the speed controller is set to the value of the connector selected in P631. With this function it is possible, for example, to use the same signal (binector) to control controller enabling commands and setting of the I component.				
P631 * (G152)	**Source for setting value for speed controller integrator** Selection of connector to be injected as the setting value for the I component 0 = connector K0000 1 = connector K0001 etc.	All connector numbers 1	Ind: None FS=454 Type: L2	P052 = 3 P051 = 40 Offline

Setting values for configuring the setpoint processing function and ramp-function generator				
Limitation at ramp-function generator output (setpoint limitation) (see also Section 8, Sheet G136) The effective limitations are: Upper limit: Minimum value of P300 and the four connectors selected with P632 Lower limit: Maximum value of P301 and the four connectors selected with P633 Note: The limiting values for both the positive and negative setpoint limits can have a positive or negative sign. The negative setpoint limit, for example, can therefore be parameterized to a positive value and the positive setpoint limit to a negative value.				
P632 * (G137)	**Source for variable positive limitation at ramp-function generator output** Selection of connectors to be injected at the **variable positive limitation at the ramp-function generator output** (setpoint limitation). 0 = connector K0000 1 = connector K0001 etc.	All connector numbers 1	Ind: 4 FS=6 Type: L2	P052 = 3 P051 = 40 Offline
P633 * (G137)	**Source for variable negative limitation at ramp-function generator output** Selection of connectors to be injected at the **variable negative limitation at the ramp-function generator output** (setpoint limitation). 0 = connector K0000 ... 8 = connector K0008 9 = value as set in parameter P632 ∗ (−1) 10 = connector K0010 etc.	All connector numbers 1	Ind: 4 FS=9 Type: L2	P052 = 3 P051 = 40 Offline
P634 * (G137)	**Source for limitation input at ramp-function generator output** Selection of connectors which must be added up to provide the **limitation input at the ramp-function generator output** (setpoint limitation). 0 = connector K0000 1 = connector K0001 etc.	All connector numbers 1	Ind: 2 FS= i001: 190 i002: 0 Type: L2	P052 = 3 P051 = 40 Offline
P635 * FDS (G135)	**Source for ramp-function generator setpoint** Selection of connector to be injected as the ramp-function generator setpoint 0 = connector K0000 1 = connector K0001 etc.	All connector numbers 1	Ind: 4 FS=194 Type: L2	P052 = 3 P051 = 40 Offline

PNU	Description	Value range [Unit] Steps	No. indices Factory setting Type	See Change (Access / Status)
P636 * (G136)	**Source for reduction signal for ramp-function generator times** Selection of connector to be injected as the **reduction signal for the ramp-function generator times** i001 acts on ramp-up and ramp-down time (P303, P304) i002 acts on lower and upper transition roundings (P305, P306) i003 acts on ramp-up time (P303) i004 acts on ramp-down time (P304) i005 acts on lower transition rounding (P305) i006 acts on upper transition rounding (P306) 0 = connector K0000 1 = connector K0001 etc.	All connector numbers 1	Ind: 6 FS=1 Type: L2	P052 = 3 P051 = 40 Offline
P637 * BDS (G136)	**Source for selection of "Ramp-function generator setting 2"** Selection of binector to control switchover to "**Ramp-function generator setting 2**". With a log. "1" signal at the binector, ramp-function generator parameter set 2 (P307 - P310) is selected. This function has a higher priority than the ramp-up integrator function. 0 = binector B0000 1 = binector B0001 etc.	All binector numbers 1	Ind: 2 FS=9175 Type: L2	P052 = 3 P051 = 40 Offline
P638 * BDS (G136)	**Source for selection of "Ramp-function generator setting 3"** Selection of binector to control switchover to "**Ramp-function generator setting 3**". With a log. "1" signal at the binector, ramp-function generator parameter set 3 (P311 - P314) is selected. This function has a higher priority than the ramp-up integrator function. 0 = binector B0000 1 = binector B0001 etc.	All binector numbers 1	Ind: 2 FS=0 Type: L2	P052 = 3 P051 = 40 Offline
P639 * (G136)	**Source for ramp-function generator setting values** Selection of connectors to be injected as the **ramp-function generator setting values**. i001 Setting value for the ramp-function generator output when the binector selected via P640 has the log. "1" signal i002 Setting value for the ramp-function generator output when the drive is not in the "Run" state (B0104=0) and the binector selected via P640 has the log. "0" signal 0 = connector K0000 1 = connector K0001 etc.	All connector numbers 1	Ind: 2 FS=0 Type: L2	P052 = 3 P051 = 40 ≥Offline
P640 * BDS (G136)	**Source for selection of "Set ramp-function generator"** Selection of binector to control the **"Set ramp-function generator"** function 0 = binector B0000 1 = binector B0001 etc.	All binector numbers 1	Ind: 2 FS=0 Type: L2	P052 = 3 P051 = 40 Offline
P641 * BDS (G136)	**Source for selection of "Bypass ramp-function generator"** Selection of binector to control the **"Bypass ramp-function generator"** function 0 = binector B0000 1 = binector B0001 etc.	All binector numbers 1	Ind: 2 FS=0 Type: L2	P052 = 3 P051 = 40 Offline

PNU	Description	Value range [Unit] Steps	No. indices Factory setting Type	See Change (Access / Status)
P642 * (G135)	**Source for variable positive limitation of main setpoint** Selection of connectors to be injected at the **variable positive limitation of the main setpoint**. The lowest value in each case of the connectors selected via the 4 indices is applied as the limit. Note: Negative values at the selected connectors result in a negative maximum value at the output of the limitation. 0 = connector K0000 1 = connector K0001 etc.	All connector numbers 1	Ind: 4 FS=2 Type: L2	P052 = 3 P051 = 40 Offline
P643 * (G135)	**Source for variable negative limitation of main setpoint** Selection of connectors to be injected at the **variable negative limitation of the main setpoint**. The lowest value in each case of the connectors selected via the 4 indices is applied as the limit. Note: Positive values at the selected connectors result in a positive minimum value at the output of the limitation. 0 = connector K0000 ... 8 = connector K0008 9 = value as set in parameter P642 ∗ (−1) 10 = connector K0010 etc.	All connector numbers 1	Ind: 4 FS=9 Type: L2	P052 = 3 P051 = 40 Offline
P644 * FDS (G135)	**Source for main setpoint** Selection of connector to be injected as the main setpoint 0 = connector K0000 1 = connector K0001 etc.	All connector numbers 1	Ind: 4 FS=206 Type: L2	P052 = 3 P051 = 40 Offline
P645 * FDS (G135)	**Source for additional setpoint** Selection of connector to be injected as an additional setpoint 0 = connector K0000 1 = connector K0001 etc.	All connector numbers 1	Ind: 4 FS=0 Type: L2	P052 = 3 P051 = 40 Offline
P646 * BDS (G135)	**Source for enable signal for ramp-up integrator switchover** Selection of binector to control enabling of the **ramp-function integrator switchover function**. 0 = binector B0000 1 = binector B0001 etc.	All binector numbers 1	Ind: 2 FS=1 Type: L2	P052 = 3 P051 = 40 Offline
P647 * BDS (G136)	**Source for enable signal for ramp-function generator tracking** [SW 2.1 and later] Selection of binector to control enabling of the **ramp-function generator tracking function**. 0 = binector B0000 1 = binector B0001 etc.	All binector numbers 1	Ind: 2 FS=1 Type: L2	P052 = 3 P051 = 40 Offline

PNU	Description	Value range [Unit] Steps	No. indices Factory setting Type	See Change (Access / Status)

11.33 Control word, status word

Selection of sources of control words 1 and 2				
P648 * BDS (G180)	**Source for control word 1** Selection of connector to act as the source for control word 1. 0 = connector K0000 ... 8 = connector K0008 9 = parameters P654 to P675 are effective (every individual bit of control word 1 is input by a binector) 10 = connector K0010 etc.	All connector numbers 1	Ind: 2 FS=9 Type: L2	P052 = 3 P051 = 40 Offline
P649 * BDS (G181)	**Source for control word 2** Selection of connector to act as the source for control word 2. 0 = connector K0000 ... 8 = connector K0008 9 = parameters P676 to P691 are effective (every individual bit of control word 2 is input by a binector) 10 = connector K0010 etc.	All connector numbers 1	Ind: 2 FS=9 Type: L2	P052 = 3 P051 = 40 Offline

Display of control words 1 and 2				
r650 (G180)	**Display of control word 1** Representation on operator panel (PMU): 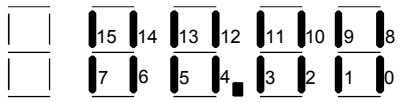 Segments 0 to 15 correspond to bits 0 to 15 of the status word Segment ON: Corresponding bit is in log. "1" state Segment OFF: Corresponding bit is in log. "0" state		Ind: None Type: V2	P052 = 3
r651 (G181)	**Display of control word 2** Representation on operator panel (PMU): 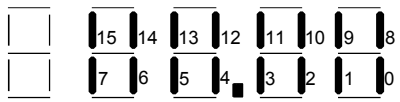 Segments 0 to 15 correspond to bits 16 to 31 of the status word Segment ON: Corresponding bit is in log. "1" state Segment OFF: Corresponding bit is in log. "0" state		Ind: None Type: V2	P052 = 3

Display of status words 1 and 2				
r652 (G182)	**Display of status word 1** Representation on operator panel (PMU): 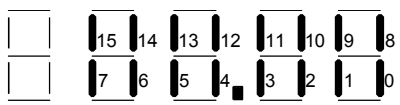 Segments 0 to 15 correspond to bits 0 to 15 of the status word Segment ON: Corresponding bit is in log. "1" state Segment OFF: Corresponding bit is in log. "0" state		Ind: None Type: V2	P052 = 3

PNU	Description	Value range [Unit] Steps	No. indices Factory setting Type	See Change (Access / Status)
r653 (G183)	**Display of status word 2** Representation on operator panel (PMU): 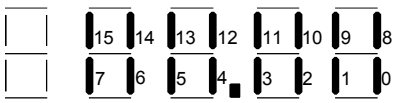 Segments 0 to 15 correspond to bits 16 to 31 of the status word Segment ON: Corresponding bit is in log. "1" state Segment OFF: Corresponding bit is in log. "0" state		Ind: None Type: V2	P052 = 3

The following parameters are used to select the binectors (some of which are gated with one another or with other signals) to be applied to the individual bits of the control word.

The settings of all these parameters are as follows:

0 = binector B0000
1 = binector B0001
etc.

The functions and logic operations are also shown on Sheets G180 and G181 in Section 8.

Control word 1

P654 * BDS (G130)	**Source for control word 1, bit0** (0=OFF1, 1=ON; ANDed with terminal 37)	All binector numbers 1	Ind: 2 FS=9358 Type: L2	P052 = 3 P051 = 40 Offline
P655 * BDS (G180)	**1. 3rd source for control word 1, bit1** (0=OFF2; ANDed with 2nd and 3rd sources for bit1)	All binector numbers 1	Ind: 2 FS=1 Type: L2	P052 = 3 P051 = 40 Offline
P656 * BDS (G180)	**2. 3rd source for control word 1, bit1** (0=OFF2; ANDed with 1st and 3rd sources for bit1)	All binector numbers 1	Ind: 2 FS=1 Type: L2	P052 = 3 P051 = 40 Offline
P657 * BDS (G180)	**3. 3rd source for control word 1, bit1** (0=OFF2; ANDed with 1st and 2nd sources for bit1)	All binector numbers 1	Ind: 2 FS=1 Type: L2	P052 = 3 P051 = 40 Offline
P658 * BDS (G180)	**1. 3rd source for control word 1, bit2** (0=OFF3=Fast stop; ANDed with 2nd and 3rd sources for bit2)	All binector numbers 1	Ind: 2 FS=1 Type: L2	P052 = 3 P051 = 40 Offline
P659 * BDS (G180)	**2. 3rd source for control word 1, bit2** (0=OFF3=Fast stop; ANDed with 1st and 3rd sources for bit2)	All binector numbers 1	Ind: 2 FS=1 Type: L2	P052 = 3 P051 = 40 Offline
P660 * BDS (G180)	**3. 3rd source for control word 1, bit2** (0=OFF3=Fast stop; ANDed with 1st and 2nd sources for bit2)	All binector numbers 1	Ind: 2 FS=1 Type: L2	P052 = 3 P051 = 40 Offline
P661 * BDS (G180)	**Source for control word 1, bit3** (0=pulse disable, 1=enable; ANDed with terminal 38)	All binector numbers 1	Ind: 2 FS=9350 Type: L2	P052 = 3 P051 = 40 Offline
P662 * BDS (G180)	**Source for control word 1, bit4** (0=set ramp-function generator to zero, 1=enable ramp-function generator)	All binector numbers 1	Ind: 2 FS=9381 Type: L2	P052 = 3 P051 = 40 Offline
P663 * BDS (G180)	**Source for control word 1, bit5** (0=ramp-function generator stop, 1=ramp-function generator start)	All binector numbers 1	Ind: 2 FS=1 Type: L2	P052 = 3 P051 = 40 Offline
P664 * BDS (G180)	**Source for control word 1, bit6** (0=enable setpoint, 1=disable setpoint)	All binector numbers 1	Ind: 2 FS=1 Type: L2	P052 = 3 P051 = 40 Offline
P665 * BDS (G180)	**1. 3rd source for control word 1, bit7** (0→1 transition=acknowledge; ORed with 2nd and 3rd sources for bit7)	All binector numbers 1	Ind: 2 FS=9367 Type: L2	P052 = 3 P051 = 40 Offline

PNU	Description	Value range [Unit] Steps	No. indices Factory setting Type	See Change (Access / Status)
P666 * BDS (G180)	**2. 3rd source for control word 1, bit7** (0→1 transition=acknowledge; ORed with 1st and 3rd sources for bit7)	All binector numbers 1	Ind: 2 FS=0 Type: L2	P052 = 3 P051 = 40 Offline
P667 * BDS (G180)	**3. 3rd source for control word 1, bit7** (0→1 transition=acknowledge; ORed with 1st and 2nd sources for bit7)	All binector numbers 1	Ind: 2 FS=0 Type: L2	P052 = 3 P051 = 40 Offline
P668 * BDS (G180)	**Source for control word 1, bit8** (1=inching bit0)	All binector numbers 1	Ind: 2 FS=0 Type: L2	P052 = 3 P051 = 40 Offline
P669 * BDS (G180)	**Source for control word 1, bit9** (1=inching bit1)	All binector numbers 1	Ind: 2 FS=0 Type: L2	P052 = 3 P051 = 40 Offline
P671 * BDS (G180)	**Source for control word 1, bit11** (0=pos. direction of rotation disabled, 1=pos. direction of rotation enabled)	All binector numbers 1	Ind: 2 FS=1 Type: L2	P052 = 3 P051 = 40 Offline
P672 * BDS (G180)	**Source for control word 1, bit12** (0= neg. direction of rotation disabled, 1= neg. direction of rotation enabled)	All binector numbers 1	Ind: 2 FS=1 Type: L2	P052 = 3 P051 = 40 Offline
P673 * BDS (G180)	**Source for control word 1, bit13** (1=raise motorized potentiometer)	All binector numbers 1	Ind: 2 FS=0 Type: L2	P052 = 3 P051 = 40 Offline
P674 * BDS (G180)	**Source for control word 1, bit14** (1=lower motorized potentiometer)	All binector numbers 1	Ind: 2 FS=0 Type: L2	P052 = 3 P051 = 40 Offline
P675 * BDS (G180)	**Source for control word 1, bit15** (0=external fault, 1=no external fault)	All binector numbers 1	Ind: 2 FS=1 Type: L2	P052 = 3 P051 = 40 Offline
Control word 2				
P676 * BDS (G181)	**Source for control word 2, bit16** (select function data set bit 0)	All binector numbers 1	Ind: 2 FS=0 Type: L2	P052 = 3 P051 = 40 Offline
P677 * BDS (G181)	**Source for control word 2, bit17** (select function data set bit 1)	All binector numbers 1	Ind: 2 FS=0 Type: L2	P052 = 3 P051 = 40 Offline
P680 * BDS (G181)	**Source for control word 2, bit20** (select fixed setpoint 0)	All binector numbers 1	Ind: 2 FS=0 Type: L2	P052 = 3 P051 = 40 Offline
P681 * BDS (G181)	**Source for control word 2, bit21** (select fixed setpoint 1)	All binector numbers 1	Ind: 2 FS=0 Type: L2	P052 = 3 P051 = 40 Offline
P684 * BDS (G181)	**Source for control word 2, bit24** (0=n controller speed droop disabled, 1=enabled)	All binector numbers 1	Ind: 2 FS=1 Type: L2	P052 = 3 P051 = 40 Offline
P685 * BDS (G181)	**Source for control word 2, bit25** (0=n controller disabled, 1=n controller enabled)	All binector numbers 1	Ind: 2 FS=1 Type: L2	P052 = 3 P051 = 40 Offline
P686 * BDS (G181)	**Source for control word 2, bit26** (0=external fault 2, 1=no external fault 2)	All binector numbers 1	Ind: 2 FS=1 Type: L2	P052 = 3 P051 = 40 Offline
P687 * BDS (G181)	**Source for control word 2, bit27** (0=master drive, speed control, 1=slave drive, torque control)	All binector numbers 1	Ind: 2 FS=0 Type: L2	P052 = 3 P051 = 40 Offline

PNU	Description	Value range [Unit] Steps	No. indices Factory setting Type	See Change (Access / Status)
P688 * BDS (G181)	**Source for control word 2, bit28** (0=external alarm 1, 1=no external alarm 1)	All binector numbers 1	Ind: 2 FS=1 Type: L2	P052 = 3 P051 = 40 Offline
P689 * BDS (G181)	**Source for control word 2, bit29** (0=external alarm 2, 1=no external alarm 2)	All binector numbers 1	Ind: 2 FS=1 Type: L2	P052 = 3 P051 = 40 Offline
P690 * (G181)	**Source for control word 2, bit30** (0=select Bico data set 1, 1=select Bico data set 2)	All binector numbers 1	Ind: None FS=0 Type: L2	P052 = 3 P051 = 40 Offline
P691 * BDS (G181)	**Source for control word 2, Bit31** [SW 1.8 and later] Main contactor checkback signal: (0 = main contactor dropped out, 1 = main contactor picked up) This control input is intended as a means of looping an auxiliary contact of the main contactor into the device control. During the Power ON routine, this signal must switch to "1" within the time period set in P095. If it does not, or it disappears during operation, fault message F004 with fault value 6 is activated. P691 = 0: Bit 31 of control word 2 is inoperative. (This setting of P691 is always active, regardless of whether control word 2 is input in word mode [P649 <> 9] or bit mode [P649 = 9]) P691 = 1: Bit 31 of control word 2 is inoperative. (This setting of P691 is active only when control word 2 is input in bit mode, i.e. when P649 = 9) P691 >= 2: The function of bit 31 of control word 2 has an effect in the case of P649=9.	All binector numbers 1	Ind: 2 FS=0 Type: L2	P052 = 3 P051 = 40 Offline

11.34 Further configuring measures

P694 * BDS (G160)	**Source for selection of enabling command for "Torque limit switchover"** Selection of binector which is to control enabling of the "Torque limit switchover" function (1=enable, see also P180 to P183) 0 = binector B0000 1 = binector B0001 etc.	All binector numbers 1	Ind: 2 FS=0 Type: L2	P052 = 3 P051 = 40 Offline
P695 * BDS (G152)	**Source for selection of "Set speed controller I component" function** Selection of binector to control the "Set I component" function 0 = binector B0000 1 = binector B0001 etc. When the binector selected in P695 switches from log. "0" to log. "1", the I component of the speed controller is set to the value of the connector selected in P631. With this function it is possible, for example, to use the same signal (binector) to control controller enabling commands and setting of the I component.	All binector numbers 1	Ind: 2 FS= i001: 9361 i002: 0 Type: L2	P052 = 3 P051 = 40 Offline
P696 * BDS (G152)	**Source for selection of "Stop speed controller I component" function** Selection of binector to control the "Stop I component" function 0 = binector B0000 1 = binector B0001 etc. When the binector selected in P696 changes to the log. "1" state, the I component of the speed controller is stopped.	All binector numbers 1	Ind: 2 FS=0 Type: L2	P052 = 3 P051 = 40 Offline

PNU	Description	Value range [Unit] Steps	No. indices Factory setting Type	See Change (Access / Status)
P697 * BDS (G153)	**Source for selection of enabling of dv/dt injection** Selection of binector to control **enabling of dv/dt injection** (state "1" = enable) 0 = binector B0000 1 = binector B0001 etc.	All binector numbers 1	Ind: 2 FS=1 Type: L2	P052 = 3 P051 = 40 Offline
P698 * BDS (G152)	**Source for selection of enabling command for speed-dependent speed controller PI / P function switchover** Selection of binector to control enabling of the speed-dependent PI / P controller switchover function (see also P222 0 = binector B0000 1 = binector B0001 etc.	All binector numbers 1	Ind: 2 FS=1 Type: L2	P052 = 3 P051 = 40 Offline

11.35 Analog inputs (main actual value, main setpoint, selectable inputs)

(see also Section 8, Sheets G113 and G114)

Analog input terminals 4 / 5 (main setpoint)				
P700 * (G113)	**Signal type of "Main setpoint" analog input** 0 = Voltage input 0 to ±10 V 1 = Current input 0 to ±20 mA 2 = Current input 4 to 20 mA	0 to 2 1	Ind: None FS=0 Type: O2	P052 = 3 P051 = 40 Offline
P701 FDS (G113)	**Normalization of "Main setpoint" analog input** This parameter specifies the percentage value which is generated for an input voltage of 10V (or an input current of 20mA) at the analog input. The following general rule applies: With a voltage input: $P701\,[\%] = 10\,V * \frac{Y}{X}$ X .. Input voltage in volts Y .. % value which is generated for input current X With a current input: $P701\,[\%] = 20\,mA * \frac{Y}{X}$ X .. Input current in mA Y .. % value which is generated for input current X	-1000.0 to 1000.0 [%] 0.1%	Ind: 4 FS=100.0 Type: I2	P052 = 3 P051 = 40 Online
P702 (G113)	**Offset for "Main setpoint" analog input**	-200.00 to 199.99 [%] 0.01%	Ind: None FS=0.00 Type: I2	P052 = 3 P051 = 40 Online
P703 * (G113)	**Mode of signal injection at "Main setpoint" analog input** 0 = Injection of signal with sign 1 = Injection of absolute value of signal 2 = Injection of signal with sign, inverted 3 = Injection of absolute value of signal, inverted	0 to 3 1	Ind: None FS=0 Type: O2	P052 = 3 P051 = 40 Offline
P704 * (G113)	**Source for selection of sign reversal at "Main setpoint" analog input** Selected binector in "1" state = sign reversal 0 = binector B0000 1 = binector B0001 etc.	All binector numbers 1	Ind: None FS=0 Type: L2	P052 = 3 P051 = 40 Offline
P705 (G113)	**Filtering time for "Main setpoint" analog input** Note: Hardware filtering of approximately 1 ms is applied as standard	0 to 10000 [ms] 1ms	Ind: None FS=0 Type: O2	P052 = 3 P051 = 40 Online
P706 * (G113)	**Source for enabling of "Main setpoint" analog input** Selected binector in "1" state = enabled 0 = binector B0000 1 = binector B0001 etc.	All binector numbers 1	Ind: None FS=1 Type: L2	P052 = 3 P051 = 40 Offline

PNU	Description	Value range [Unit] Steps	No. indices Factory setting Type	See Change (Access / Status)
P707 * (G113)	**Resolution of "Main setpoint" analog input** The voltage applied to the analog input is converted to a digital value (A/D conversion) for further processing. The method used calculates an average value of the input voltage over a specific measuring time. The A/D conversion process produces a scale for the voltage range of 0 to ± 10V, the number of steps (divisions) along this scale can be set in P707 (i.e. the smallest possible differentiable change in the input voltage (quantization) can be set in this parameter). The number of scale steps or intervals is referred to as "Resolution". The resolution is normally specified in bits: ± 11 bits means 2 * 2048 scale divisions ± 12 bits means 2 * 4096 scale divisions ± 13 bits means 2 * 8192 scale divisions ± 14 bits means 2 * 16384 scale divisions The following applies: The higher the resolution, the longer the averaging time and thus also the delay period between the application of an analog step change and the earliest possible moment of availability of the digital value for further processing. For this reason, it is important to find a compromise between the resolution and delay period. Param. value / Resolution better than / Quantization / Delay period 11 / ± 11 bits / 4.4 mV / 0.53 ms 12 / ± 12 bits / 2.2 mV / 0.95 ms 13 / ± 13 bits / 1.1 mV / 1.81 ms 14 / ± 14 bits / 0.56 mV / 3.51 ms If the analog input is operating as a current input (0 to 20 mA or 4 to 20 mA), the above applies analogously.	11 to 14 [Bit] 1 bit	Ind: None FS=12 Type: O2	P052 = 3 P051 = 40 Offline

Analog input terminals 6 / 7 (analog selectable input 1)				
P710 * (G113)	**Signal type of "Analog selectable input 1"** 0 = Voltage input 0 to ±10 V 1 = Current input 0 to ±20 mA 2 = Current input 4 to 20 mA	0 to 2 1	Ind: None FS=0 Type: O2	P052 = 3 P051 = 40 Offline
P711 FDS (G113)	**Normalization of "Analog selectable input 1"** This parameter specifies the percentage value which is generated for an input voltage of 10V (or an input current of 20mA) at the analog input. The following general rule applies: With a voltage input: $P711\,[\%] = 10\,V * \frac{Y}{X}$ X .. Input voltage in volts Y .. % value which is generated for input current X With a current input: $P711\,[\%] = 20\,mA * \frac{Y}{X}$ X .. Input current in mA Y .. % value which is generated for input current X	-1000.0 to 1000.0 [%] 0.1%	Ind: 4 FS=100.0 Type: I2	P052 = 3 P051 = 40 Online
P712 (G113)	**Offset for "Analog selectable input 1"**	-200.00 to 199.99 [%] 0.01%	Ind: None FS=0.00 Type: I2	P052 = 3 P051 = 40 Online
P713 * (G113)	**Mode of signal injection at "Analog selectable input 1"** 0 = Injection of signal with sign 1 = Injection of absolute value of signal 2 = Injection of signal with sign, inverted 3 = Injection of absolute value of signal, inverted	0 to 3 1	Ind: None FS=0 Type: O2	P052 = 3 P051 = 40 Offline
P714 * (G113)	**Source for selection of sign reversal at "Analog selectable input 1"** Selected binector in "1" state = sign reversal 0 = binector B0000 1 = binector B0001 etc.	All binector numbers 1	Ind: None FS=0 Type: L2	P052 = 3 P051 = 40 Offline

PNU	Description	Value range [Unit] Steps	No. indices Factory setting Type	See Change (Access / Status)
P715 (G113)	**Filtering time for "Analog selectable input 1"** Note: Hardware filtering of approximately 1 ms is applied as standard	0 to 10000 [ms] 1ms	Ind: None FS=0 Type: O2	P052 = 3 P051 = 40 Online
P716 * (G113)	**Source for enabling of "Analog selectable input 1"** Selected binector in “1” state = enabled 0 = binector B0000 1 = binector B0001 etc.	All binector numbers 1	Ind: None FS=1 Type: L2	P052 = 3 P051 = 40 Offline
P717 * (G113)	**Resolution of "Analog selectable input 1"** See P707	10 to 14 [Bit] 1 bit	Ind: None FS=12 Type: O2	P052 = 3 P051 = 40 Offline

Analog input terminals 8 / 9 (analog selectable input 2)				
P721 FDS (G114)	**Normalization of "Analog selectable input 2"** This parameter specifies the percentage value which is generated for an input voltage of 10V (or an input current of 20mA) at the analog input. The following general rule applies: With a voltage input: $P721\,[\%] = 10\,V * \frac{Y}{X}$ X .. Input voltage in volts Y .. % value which is generated for input current X With a current input: $P721\,[\%] = 20\,mA * \frac{Y}{X}$ X .. Input current in mA Y .. % value which is generated for input current X	-1000.0 to 1000.0 [%] 0.1%	Ind: 4 FS=100.0 Type: I2	P052 = 3 P051 = 40 Online
P722 (G114)	**Offset for "Analog selectable input 2"**	-200.00 to 199.99 [%] 0.01%	Ind: None FS=0.00 Type: I2	P052 = 3 P051 = 40 Online
P723 * (G114)	**Mode of signal injection at "Analog selectable input 2"** 0 = Injection of signal with sign 1 = Injection of absolute value of signal 2 = Injection of signal with sign, inverted 3 = Injection of absolute value of signal, inverted	0 to 3 1	Ind: None FS=0 Type: O2	P052 = 3 P051 = 40 Offline
P724 * (G114)	**Source for selection of sign reversal at "Analog selectable input 2"** Selected binector in “1” state = sign reversal 0 = binector B0000 1 = binector B0001 etc.	All binector numbers 1	Ind: None FS=0 Type: L2	P052 = 3 P051 = 40 Offline
P725 (G114)	**Filtering time for "Analog selectable input 2"** Note: Hardware filtering of approximately 1 ms is applied as standard	0 to 10000 [ms] 1ms	Ind: None FS=0 Type: O2	P052 = 3 P051 = 40 Online
P726 * (G114)	**Source for enabling of "Analog selectable input 2"** Selected binector in “1” state = enabled 0 = binector B0000 1 = binector B0001 etc.	All binector numbers 1	Ind: None FS=1 Type: L2	P052 = 3 P051 = 40 Offline

PNU	Description	Value range [Unit] Steps	No. indices Factory setting Type	See Change (Access / Status)
Analog input terminals 10 / 11 (analog selectable input 3)				
P731 FDS (G114)	**Normalization of "Analog selectable input 3"** This parameter specifies the percentage value which is generated for an input voltage of 10V (or an input current of 20mA) at the analog input. The following general rule applies: With a voltage input: $P731\,[\%] = 10\,V * \frac{Y}{X}$ X .. Input voltage in volts Y .. % value which is generated for input current X With a current input: $P731\,[\%] = 20\,mA * \frac{Y}{X}$ X .. Input current in mA Y .. % value which is generated for input current X	-1000.0 to 1000.0 [%] 0.1%	Ind: 4 FS=100.0 Type: I2	P052 = 3 P051 = 40 Online
P732 (G114)	**Offset for "Analog selectable input 3"**	-200.00 to 199.99 [%] 0.01%	Ind: None FS=0.00 Type: I2	P052 = 3 P051 = 40 Online
P733 * (G114)	**Mode of signal injection at "Analog selectable input 3"** 0 = Injection of signal with sign 1 = Injection of absolute value of signal 2 = Injection of signal with sign, inverted 3 = Injection of absolute value of signal, inverted	0 to 3 1	Ind: None FS=0 Type: O2	P052 = 3 P051 = 40 Offline
P734 * (G114)	**Source for selection of sign reversal at "Analog selectable input 3"** Selected binector in "1" state = sign reversal 0 = binector B0000 1 = binector B0001 etc.	All binector numbers 1	Ind: None FS=0 Type: L2	P052 = 3 P051 = 40 Offline
P735 (G114)	**Filtering time for "Analog selectable input 3"** Note: Hardware filtering of approximately 1 ms is applied as standard	0 to 10000 [ms] 1ms	Ind: None FS=0 Type: O2	P052 = 3 P051 = 40 Online
P736 * (G114)	**Source for enabling of "Analog selectable input 3"** Selected binector in "1" state = enabled 0 = binector B0000 1 = binector B0001 etc.	All binector numbers 1	Ind: None FS=1 Type: L2	P052 = 3 P051 = 40 Offline

Analog input terminals 103 / 104 (main actual value)				
P741 FDS (G113)	**Normalization for "Main actual value"** Rated value of input voltage at n_{max} (=tachometer voltage at maximum speed) This parameter defines the maximum speed when P083=1.	-270.00 to 270.00 [V] 0.01V	Ind: 4 FS=60.00 Type: I2	P052 = 3 P051 = 40 Online
P742 (G113)	**Offset for "Main actual value" analog input**	-200.00 to 199.99 [%] 0.01%	Ind: None FS=0.00 Type: I2	P052 = 3 P051 = 40 Online
P743 * (G113)	**Mode of signal injection at "Main actual value" analog input** 0 = Injection of signal with sign 1 = Injection of absolute value of signal 2 = Injection of signal with sign, inverted 3 = Injection of absolute value of signal, inverted	0 to 3 1	Ind: None FS=0 Type: O2	P052 = 3 P051 = 40 Offline
P744 * (G113)	**Source for selection of sign reversal at "Main actual value" analog input** Selected binector in "1" state = sign reversal 0 = binector B0000 1 = binector B0001 etc.	All binector numbers 1	Ind: None FS=0 Type: L2	P052 = 3 P051 = 40 Offline
P745 (G113)	**Filtering time for "Main actual value" analog input** Note: Hardware filtering of approximately 1 ms is applied as standard	0 to 10000 [ms] 1ms	Ind: None FS=0 Type: O2	P052 = 3 P051 = 40 Online

PNU	Description	Value range [Unit] Steps	No. indices Factory setting Type	See Change (Access / Status)
P746 * (G113)	**Source for enabling of "Main actual value" analog input** Selected binector in “1” state = enabled 0 = binector B0000 1 = binector B0001 etc.	All binector numbers 1	Ind: None FS=1 Type: L2	P052 = 3 P051 = 40 Offline

11.36 Analog outputs

(see also Section 8, Sheets G115 and G116)

Analog output terminals 12 / 13 (actual current display)				
P749 * (G115)	**Control word for terminal 12 (actual current display)** 0 Output with correct sign (positive voltage: Current in torque direction MI) (negative voltage: Current in torque direction MII) 1 Output of absolute value (positive voltage only) 2 Output with sign, inverted (positive voltage: Current in torque direction MII) (negative voltage: Current in torque direction MI) 3 Output of absolute value, inverted (negative voltage only)	0 to 3 1	Ind: None FS=0 Type: O2	P052 = 3 P051 = 40 Online

Analog output, terminal 14 / 15				
P750 * (G115)	**Source for output value at analog output 1** 0 = connector K0000 1 = connector K0001 etc.	All connector numbers 1	Ind: None FS=170 Type: L2	P052 = 3 P051 = 40 Online
P751 * (G115)	**Mode of signal injection at analog output 1** 0 = Injection of signal with sign 1 = Injection of absolute value of signal 2 = Injection of signal with sign, inverted 3 = Injection of absolute value of signal, inverted	0 to 3 1	Ind: None FS=0 Type: O2	P052 = 3 P051 = 40 Online
P752 (G115)	**Filtering time for analog output 1**	0 to 10000 [ms] 1ms	Ind: None FS=0 Type: O2	P052 = 3 P051 = 40 Online
P753 (G115)	**Normalization of analog output 1** $y[V] = x * \frac{P753}{100\,\%}$ x = normalization input (corresponds to filtering output) y = normalization output (corresponds to output voltage at analog output with an offset of 0)	-200.00 to 199.99 [V] 0.01V	Ind: None FS=10.00 Type: I2	P052 = 3 P051 = 40 Online
P754 (G115)	**Offset for analog output 1**	-10.00 to 10.00 [V] 0.01V	Ind: None FS=0.00 Type: I2	P052 = 3 P051 = 40 Online

Analog output, terminal 16 / 17				
P755 * (G115)	**Source for output value at analog output 2** 0 = connector K0000 1 = connector K0001 etc.	All connector numbers 1	Ind: None FS=167 Type: L2	P052 = 3 P051 = 40 Online
P756 * (G115)	**Mode of signal injection at analog output 2** 0 = Injection of signal with sign 1 = Injection of absolute value of signal 2 = Injection of signal with sign, inverted 3 = Injection of absolute value of signal, inverted	0 to 3 1	Ind: None FS=0 Type: O2	P052 = 3 P051 = 40 Online
P757 (G115)	**Filtering time for analog output 2**	0 to 10000 [ms] 1ms	Ind: None FS=0 Type: O2	P052 = 3 P051 = 40 Online

PNU	Description	Value range [Unit] Steps	No. indices Factory setting Type	See Change (Access / Status)
P758 (G115)	**Normalization of analog output 2** $y[V] = x * \frac{P758}{100\,\%}$ x = normalization input (corresponds to filtering output) y = normalization output (corresponds to output voltage at analog output with an offset of 0)	-200.00 to 199.99 [V] 0.01V	Ind: None FS=10.00 Type: I2	P052 = 3 P051 = 40 Online
P759 (G115)	**Offset for analog output 2**	-10.00 to 10.00 [V] 0.01V	Ind: None FS=0.00 Type: I2	P052 = 3 P051 = 40 Online
Analog output, terminal 18 / 19				
P760 * (G116)	**Source for output value at analog output 3** 0 = connector K0000 1 = connector K0001 etc.	All connector numbers 1	Ind: None FS=0 Type: L2	P052 = 3 P051 = 40 Online
P761 * (G116)	**Mode of signal injection at analog output 3** 0 = Injection of signal with sign 1 = Injection of absolute value of signal 2 = Injection of signal with sign, inverted 3 = Injection of absolute value of signal, inverted	0 to 3 1	Ind: None FS=0 Type: O2	P052 = 3 P051 = 40 Online
P762 (G116)	**Filtering time for analog output 3**	0 to 10000 [ms] 1ms	Ind: None FS=0 Type: O2	P052 = 3 P051 = 40 Online
P763 (G116)	**Normalization of analog output 3** $y[V] = x * \frac{P763}{100\,\%}$ x = normalization input (corresponds to filtering output) y = normalization output (corresponds to output voltage at analog output with an offset of 0)	-200.00 to 199.99 [V] 0.01V	Ind: None FS=10.00 Type: I2	P052 = 3 P051 = 40 Online
P764 (G116)	**Offset for analog output 3**	-10.00 to 10.00 [V] 0.01V	Ind: None FS=0.00 Type: I2	P052 = 3 P051 = 40 Online
Analog output, terminal 20 / 21				
P765 * (G116)	**Source for output value at analog output 4** 0 = connector K0000 1 = connector K0001 etc.	All connector numbers 1	Ind: None FS=0 Type: L2	P052 = 3 P051 = 40 Online
P766 * (G116)	**Mode of signal injection at analog output 4** 0 = Injection of signal with sign 1 = Injection of absolute value of signal 2 = Injection of signal with sign, inverted 3 = Injection of absolute value of signal, inverted	0 to 3 1	Ind: None FS=0 Type: O2	P052 = 3 P051 = 40 Online
P767 (G116)	**Filtering time for analog output 4**	0 to 10000 [ms] 1ms	Ind: None FS=0 Type: O2	P052 = 3 P051 = 40 Online
P768 (G116)	**Normalization of analog output 4** $y[V] = x * \frac{P768}{100\,\%}$ x = normalization input (corresponds to filtering output) y = normalization output (corresponds to output voltage at analog output with an offset of 0)	-200.00 to 199.99 [V] 0.01V	Ind: None FS=10.00 Type: I2	P052 = 3 P051 = 40 Online
P769 (G116)	**Offset for analog output 4**	-10.00 to 10.00 [V] 0.01V	Ind: None FS=0.00 Type: I2	P052 = 3 P051 = 40 Online

PNU	Description	Value range [Unit] Steps	No. indices Factory setting Type	See Change (Access / Status)

11.37 Binary outputs

(see also Section 8, Sheet G112)

P770 * (G112)	**Control word for binary selectable outputs** i001: 0 Binary selectable output at terminal 46 is not inverted 1 Binary selectable output at terminal 46 is inverted i002: 0 Binary selectable output at terminal 48 is not inverted 1 Binary selectable output at terminal 48 is inverted i003: 0 Binary selectable output at terminal 50 is not inverted 1 Binary selectable output at terminal 50 is inverted i004: 0 Binary selectable output at terminal 52 is not inverted 1 Binary selectable output at terminal 52 is inverted	0 to 1 1	Ind: 4 FS=0 Type: O2	P052 = 3 P051 = 40 Online
P771 * (G112)	**Source for output value at binary output terminal 46** 0 = binector B0000 1 = binector B0001 etc.	All binector numbers 1	Ind: None FS=252 Type: L2	P052 = 3 P051 = 40 Online
P772 *	**Source for output value at binary output terminal 48** 0 = binector B0000 1 = binector B0001 etc.	All binector numbers 1	Ind: None FS=0 Type: L2	P052 = 3 P051 = 40 Online
P773 * (G112)	**Source for output value at binary output terminal 50** 0 = binector B0000 1 = binector B0001 etc.	All binector numbers 1	Ind: None FS=0 Type: L2	P052 = 3 P051 = 40 Online
P774 * (G112)	**Source for output value at binary output terminal 52** 0 = binector B0000 1 = binector B0001 etc.	All binector numbers 1	Ind: None FS=0 Type: L2	P052 = 3 P051 = 40 Online
P775 (G112)	**Delay for output value at binary output 1** The logic level at the binary selectable output changes only if the internal signal level remains constant for the set delay period (internal signal level changes which do not last as long as this delay period are not switched through to the output)	0 to 10000 [ms] 1ms	Ind: None FS=0 Type: O2	P052 = 3 P051 = 40 Online
P776 (G112)	**Delay for output value at binary output 2** The logic level at the binary selectable output changes only if the internal signal level remains constant for the set delay period (internal signal level changes which do not last as long as this delay period are not switched through to the output)	0 to 10000 [ms] 1ms	Ind: None FS=0 Type: O2	P052 = 3 P051 = 40 Online
P777 (G112)	**Delay for output value at binary output 3** The logic level at the binary selectable output changes only if the internal signal level remains constant for the set delay period (internal signal level changes which do not last as long as this delay period are not switched through to the output)	0 to 10000 [ms] 1ms	Ind: None FS=0 Type: O2	P052 = 3 P051 = 40 Online
P778 (G112)	**Delay for output value at binary output 4** The logic level at the binary selectable output changes only if the internal signal level remains constant for the set delay period (internal signal level changes which do not last as long as this delay period are not switched through to the output)	0 to 10000 [ms] 1ms	Ind: None FS=0 Type: O2	P052 = 3 P051 = 40 Online

11.38 Configuration of serial interfaces on basic converter

G-SST 1 (RS485 / RS232 on X300) (see also Section 8, Sheet G170 and Section 9)				
P780 * (G170)	**Selection of protocol for G-SST1 basic converter interface** 0 Setting has no function 2 USS protocol 8 for factory purposes 9 For internal factory test purposes	0, 2, 8, 9 1	Ind: None FS=2 Type: O2	P052 = 3 P051 = 40 Offline

PNU	Description	Value range [Unit] Steps	No. indices Factory setting Type	See Change (Access / Status)
P781 * (G170)	**Number of process data for G-SST1** When P790 = 0 or 9 is selected: Parameter is irrelevant When USS protocol (P780=2) is selected: Number of **PZD elements** 0 No process data are expected or sent in the USS protocol 1...16 Number of process data words in USS protocol (same number applies to transmission and receipt) The received PZD elements (1 to max. 16) are available at connectors (K2001 to K2016) and, in some cases, bit-serially at binectors for "internal wiring" purposes. The PZD elements to be transmitted (1 to max. 16) are selected in parameters P784.01 to P784.16.	0 to 16 1	Ind: None FS=2 Type: O2	P052 = 3 P051 = 40 Offline
P782 * (G170)	**Length of parameter jobs for G-SST1** This parameter is functional only when P780=2 (USS protocol). 0 No PKW data are expected or sent in the USS protocol. 3, 4 3 or 4 PKW data words are expected in the USS protocol and 3 or 4 PKW data words are also sent (for transmission of parameter values). 127 Number of PKWs is determined by the telegram length	0, 3, 4, 127 1	Ind: None FS=127 Type: O2	P052 = 3 P051 = 40 Offline
P783 * (G170)	**Baud rate for G-SST1** 1 300 baud 2 600 baud 3 1200 baud 4 2400 baud 5 4800 baud 6 9600 baud 7 19200 baud 8 38400 baud 9 56700 baud 11 93750 baud 13 187500 baud	1 to 13 1	Ind: None FS=6 Type: O2	P052 = 3 P051 = 40 Offline
P784 * (G170)	**Source for transmit data for G-SST1** Selection of connectors to be transferred as transmit data to the USS master via USS interface 1. i001: Selection for word 1 i002: Selection for word 2 **...** i016: Selection for word 16 Applicable settings: 0 = connector K0000 1 = connector K0001 etc.	All connector numbers 1	Ind: 16 FS= i001: 32 i002: 167 i003: 0 i004: 33 i005-i016: 0 Type: L2	P052 = 3 P051 = 40 Offline
P785 (G170)	**Options for G-SST1** i001: 0 = Bus terminator OFF 1 = Bus terminator ON i002: 0 = Bit 10 of the 1st receive word does not function as "Control by PLC". 1 = Bit 10 of the 1st receive word does function as "Control by PLC", i.e. when bit 10 = 0, all other bits of the 1st receive word, as well as receive words 2 to 16, are not written to connectors K2001 to K2016, or to binectors B2100 to B2915. All these connectors and binectors retain their old values.	0 to 1 1	Ind: 2 FS=0 Type: O2	P052 = 3 P051 = 40 Offline
P786 * (G170)	**USS bus address for G-SST1** This parameter is functional only when P780=2 (USS protocol). Address via which the unit can be addressed in USS bus operation.	0 to 30 1	Ind: None FS=0 Type: O2	P052 = 3 P051 = 40 Offline

PNU	Description	Value range [Unit] Steps	No. indices Factory setting Type	See Change (Access / Status)
P787 (G170)	**Telegram failure time for G-SST1** The failure time set in this parameter is valid when setting P780=2 (USS protocol) is selected. 0.000 No time monitoring 0.001...65.000 Time which may elapse between the receipt of two telegrams addressed to the unit before a fault message is activated. Fault message F011 is activated if no valid telegram is received within this time period. Note: The telegram monitoring function is active • from the receipt of the first error-free telegram after connection of the electronics power supply • from the receipt of the first error-free telegram after the telegram monitor has responded (i.e. monitoring timeout).	0.000 to 65.000 [s] 0.001s	Ind: None FS=0.000 Type: O2	P052 = 3 P051 = 40 Offline
P788 * (G170)	**Source for triggering of message F011** Selection of binector which must trigger message F011 when it switches to log. "1" 2030 = binector B2030 2031 = binector B2031	2030, 2031	Ind: None FS=2030 Type: L2	P052 = 3 P051 = 40 Offline
r789 (G170)	**Diagnostic information for G-SST1** Free-running counter, overflow at 65535 i001: Number of error-free telegrams i002: Number of errored telegrams: Byte frame, parity, overrun or BCC error i003: Number of byte frame errors i004: Number of overrun errors i005: Parity error i006: STX error: Start interval before STX not observed, telegram residual transfer time not observed, delay time of LGE character too long, erroneous STX, i.e. ≠ 02 i007: Violation of telegram residual transfer time i008: Block check error i009: Incorrect telegram length: With P782=3 or 4 only: The length of the received telegram is ≠ P781 + P782 (Note: If the received values are correct, they will be processed even when this error has been detected) i010: Timeout error: No valid telegram has been received for a period exceeding the setting in P787. After the occurrence of a timeout error, this counter is not activated again until the next valid telegram is received.		Ind: 10 Type: O2	P052 = 3

G-SST 2 (RS485 on X172) (see also Section 8, Sheets G171 and G173 and Section 9)				
P790 * (G171) (G173)	**Selection of protocol for G-SST2 basic converter interface** 0 Setting has no function 2 USS protocol 5 ”Peer-to-peer” communication 6 For internal factory test purposes 9 For internal factory test purposes	0, 2, 5, 6, 9 1	Ind: None FS=0 Type: O2	P052 = 3 P051 = 40 Offline

PNU	Description	Value range [Unit] Steps	No. indices Factory setting Type	See Change (Access / Status)
P791 * (G171) (G173)	**Number of process data for G-SST2** When P790 = 0 or 9 is selected: Parameter is irrelevant When USS protocol (P790=2) is selected: Number of **PZD elements** 0 No process data are expected or sent in the USS protocol 1...16 Number of process data words in USS protocol (same number applies to transmission and receipt) The received PZD elements (1 to max. 16) are available at connectors (K6001 to K6016) and, in some cases, bit-serially at binectors for "internal wiring" purposes. The PZD elements to be transmitted (1 to max. 16) are selected in parameters P794.01 to P794.16. When peer-to-peer (P790= 5) is selected: Number of **transferred words** 0 Illegal setting 1...5 Number of transferred words 6...16 Illegal setting	0 to 16 1	Ind: None FS=2 Type: O2	P052 = 3 P051 = 40 Offline
P792 * (G171)	**Length of parameter jobs for G-SST2** This parameter is functional only when P790=2 (USS protocol). 0 No PKW data are expected or sent in the USS protocol. 3, 4 3 or 4 PKW data words are expected in the USS protocol and 3 or 4 PKW data words are also sent (for transmission of parameter values). 127 Number of PKWs is determined by the telegram length	0, 3, 4, 127 1	Ind: None FS=127 Type: O2	P052 = 3 P051 = 40 Offline
P793 * (G171) (G173)	**Baud rate for G-SST2** 1 300 baud 2 600 baud 3 1200 baud 4 2400 baud 5 4800 baud 6 9600 baud 7 19200 baud 8 38400 baud 9 56700 baud 11 93750 baud 13 187500 baud	1 to 13 1	Ind: None FS=6 Type: O2	P052 = 3 P051 = 40 Offline
P794 * (G171) (G173)	**Source for transmit data for G-SST2** Selection of connectors to be transferred as transmit data via basic converter interface 3 When USS protocol (P790=2) is selected: i001: Selection for word 1 i002: Selection for word 2 ... i016: Selection for word 16 When peer-to-peer (P790=5) is selected: i001: Selection for word 1 i002: Selection for word 2 ... i005: Selection for word 5 i006: Not in use ... i016: Not in use Applicable settings: 0 = connector K0000 1 = connector K0001 etc.	All connector numbers 1	Ind: 16 FS= i001: 32 i002: 167 i003: 0 i004: 33 i005-i016: 0 Type: L2	P052 = 3 P051 = 40 Offline

PNU	Description	Value range [Unit] Steps	No. indices Factory setting Type	See Change (Access / Status)
P795 (G171) (G173)	**Options for G-SST2** i001: 0 = Bus terminator OFF 1 = Bus terminator ON i002: 0 = Bit 10 of the 1st receive word does not function as "Control by PLC". 1 = Bit 10 of the 1st receive word does function as "Control by PLC", i.e. when bit 10 = 0, all other bits of the 1st receive word, as well as receive words 2 to 16, are not written to connectors K6001 to K6016, or to binectors B6100 to B6915. All these connectors and binectors retain their old values	0 to 1 1	Ind: 2 FS=0 Type: O2	P052 = 3 P051 = 40 Offline
P796 * (G171)	**USS bus address for G-SST2** This parameter is functional only when P790=2 (USS protocol). Address via which the unit can be addressed in USS bus operation.	0 to 30 1	Ind: None FS=0 Type: O2	P052 = 3 P051 = 40 Offline
P797 (G171) (G173)	**Telegram failure time for G-SST2** The failure time set in this parameter is valid when setting P790=2 (USS protocol) or P790=5 (peer-to-peer) is selected. 0.000 No time monitoring 0.001...65.000 Time which may elapse between the receipt of two telegrams addressed to the unit before a fault message is activated. Fault message F012 is activated if no valid telegram is received within this time period. Note: The telegram monitoring function is active • from the receipt of the first error-free telegram after connection of the electronics power supply • from the receipt of the first error-free telegram after the telegram monitor has responded (i.e. monitoring timeout). Since the telegram transfer time is dependent on the set baud rate, the following minimum setting values for P797 are recommended: Baud rate as set in P793: Recommended minimum value for P797: 300 baud 0.520s 600 baud 0.260s 1200 baud 0.140s 2400 baud 0.080s ≥ 4800 baud 0.040s Note: If the "Automatic restart" function is selected (P086>0) on the peer-to-peer communication partner, then only a parameter setting of P797>P086 (on the communication partner) is meaningful.	0.000 to 65.000 [s] 0.001s	Ind: None FS=0.000 Type: O2	P052 = 3 P051 = 40 Offline
P798 * (G171) (G173)	**Source for triggering of message F012** Selection of binector which must trigger message F012 when it switches to log. "1" 6030 = binector B6030 6031 = binector B6031	6030, 6031	Ind: None FS=6030 Type: L2	P052 = 3 P051 = 40 Offline

PNU	Description	Value range [Unit] Steps	No. indices Factory setting Type	See Change (Access / Status)
r799 (G171) (G173)	**Diagnostic information for G-SST2** Free-running counter, overflow at 65535 i001: Number of error-free telegrams i002: Number of errored telegrams: Byte frame, parity, overrun or BCC error i003: Number of byte frame errors i004: Number of overrun errors i005: Parity error i006: STX error: Start interval before STX not observed, telegram residual transfer time not observed, delay time of LGE character too long, erroneous STX, i.e. ≠ 02 i007: Violation of telegram residual transfer time (USS prot. only) i008: Block check error i009: Incorrect telegram length: With P792=3 or 4 only: The length of the received telegram is ≠ P791 + P792 (Note: If the received values are correct, they will be processed even when this error has been detected) i010: Timeout error: No valid telegram has been received for a period exceeding the setting in P797. After the occurrence of a timeout error, this counter is not activated again until the next valid telegram is received.		Ind: 10 Type: O2	P052 = 3

G-SST 3 (RS485 on X162) (see also Section 8, Sheets G172 and G174 and Section 9)				
P800 * (G172) (G174)	**Selection of protocol for G-SST3 basic converter interface** 0 Setting has no function 2 USS protocol 5 "Peer-to-peer" communication 9 For internal factory test purposes	0, 2, 5, 9 1	Ind: None FS=0 Type: O2	P052 = 3 P051 = 40 Offline
P801 * (G172) (G174)	**Number of process data for G-SST3** When P800 = 0 or 9 is selected: Parameter is irrelevant When USS protocol (P800=2) is selected: Number of **PZD elements** 0 No process data are expected or sent in the USS protocol 1...16 Number of process data words in USS protocol (same number applies to transmission and receipt) The received PZD elements (1 to max. 16) are available at connectors (K6001 to K6016) and, in some cases, bit-serially at binectors for "internal wiring" purposes. The PZD elements to be transmitted (1 to max. 16) are selected in parameters P804.01 to P804.16. When peer-to-peer (P800=5) is selected: Number of **transferred words** 0 Illegal setting 1...5 Number of transferred words 6...16 Illegal setting	0 to 16 1	Ind: None FS=2 Type: O2	P052 = 3 P051 = 40 Offline
P802 * (G172)	**Length of parameter jobs for G-SST3** This parameter is functional only when P800=2 (USS protocol). 0 No PKW data are expected or sent in the USS protocol. 3, 4 3 or 4 PKW data words are expected in the USS protocol and 3 or 4 PKW data words are also sent (for transmission of parameter values). 127 Number of PKWs is determined by the telegram length	0, 3, 4, 127 1	Ind: None FS=127 Type: O2	P052 = 3 P051 = 40 Offline

PNU	Description	Value range [Unit] Steps	No. indices Factory setting Type	See Change (Access / Status)
P803 * (G172) (G174)	**Baud rate for G-SST3** 1 300 baud 2 600 baud 3 1200 baud 4 2400 baud 5 4800 baud 6 9600 baud 7 19200 baud 8 38400 baud 9 56700 baud 11 93750 baud 13 187500 baud	1 to 13 1	Ind: None FS=13 Type: O2	P052 = 3 P051 = 40 Offline
P804 * (G172) (G174)	**Source for transmit data for G-SST3** Selection of connectors to be transferred as transmit data via basic converter interface 3 When USS protocol (P800=2) is selected: i001: Selection for word 1 i002: Selection for word 2 ... i016: Selection for word 16 When peer-to-peer (P800=5) is selected: i001: Selection for word 1 i002: Selection for word 2 ... i005: Selection for word 5 i006: Not in use ... i016: Not in use Applicable settings: 0 = connector K0000 1 = connector K0001 etc.	All connector numbers 1	Ind: 16 FS= i001: 32 i002: 167 i003: 0 i004: 33 i005-i016: 0 Type: L2	P052 = 3 P051 = 40 Offline
P805 (G172) (G174)	**Options for G-SST3** i001: 0 = Bus terminator OFF 1 = Bus terminator ON i002: 0 = Bit 10 of the 1st receive word does not function as "Control by PLC". 1 = Bit 10 of the 1st receive word does function as "Control by PLC“, i.e. when bit 10 = 0, all other bits of the 1st receive word, as well as receive words 2 to 16, are not written to connectors K9001 to K9016, or to binectors B9100 to B9915. All these connectors and binectors retain their old values.	0 to 1 1	Ind: 2 FS=0 Type: O2	P052 = 3 P051 = 40 Offline
P806 * (G172)	**USS bus address for G-SST3** This parameter is functional only when P800=2 (USS protocol). Address via which the unit can be addressed in USS bus operation.	0 to 30 1	Ind: None FS=0 Type: O2	P052 = 3 P051 = 40 Offline

PNU	Description	Value range [Unit] Steps	No. indices Factory setting Type	See Change (Access / Status)
P807 (G172) (G174)	**Telegram failure time for G-SST3** The failure time set in this parameter is valid when setting P800=2 (USS protocol) or P800=5 (peer-to-peer) is selected. 0.000 No time monitoring 0.001...65.000 Time which may elapse between the receipt of two telegrams addressed to the unit before a fault message is activated. Fault message F013 is activated if no valid telegram is received within this time period. Note: The telegram monitoring function is active • from the receipt of the first error-free telegram after connection of the electronics power supply • from the receipt of the first error-free telegram after the telegram monitor has responded (i.e. monitoring timeout). Since the telegram transfer time is dependent on the set baud rate, the following minimum setting values for P807 are recommended: Baud rate as set in P803: Recommended minimum value for P807: 300 baud 0.520s 600 baud 0.260s 1200 baud 0.140s 2400 baud 0.080s ≥ 4800 baud 0.040s Note: If the "Automatic restart" function is selected (P086>0) on the peer-to-peer communication partner, then only a parameter setting of P807>P086 (on the communication partner) is meaningful.	0.000 to 65.000 [s] 0.001s	Ind: None FS=0.000 Type: O2	P052 = 3 P051 = 40 Offline
P808 * (G172) (G174)	**Source for triggering of message F013** Selection of binector which must trigger message F013 when it switches to log. "1" 9030 = binector B9030 9031 = binector B9031	9030, 9031	Ind: None FS=9030 Type: L2	P052 = 3 P051 = 40 Offline
r809	**Diagnostic information for G-SST3** Free-running counter, overflow at 65535 i001: Number of error-free telegrams i002: Number of errored telegrams: Byte frame, parity, overrun or BCC error i003: Number of byte frame errors i004: Number of overrun errors i005: Parity error i006: STX error: Start interval before STX not observed, telegram residual transfer time not observed, delay time of LGE character too long, erroneous STX, i.e. ≠ 02 i007: Violation of telegram residual transfer time (USS prot. only) i008: Block check error i009: Incorrect telegram length: With PP802=3 or 4 only: The length of the received telegram is ≠ P801 + P802 (Note: If the received values are correct, they will be processed even when this error has been detected) i010: Timeout error: No valid telegram has been received for a period exceeding the setting in P807. After the occurrence of a timeout error, this counter is not activated again until the next valid telegram is received.		Ind: 10 Type: O2	P052 = 3

PNU	Description	Value range [Unit] Steps	No. indices Factory setting Type	See Change (Access / Status)
r810 (G170)	**Receive data on G-SST1** Display of data received via **USS interface 1** i001: Display process data word 1 ... i016 Display process data word 16 i017: Display parameter data word 1 ... i020: Display parameter data word 4	0000 to FFFF H 1	Ind: 20 Type: L2	P052 = 3
r811 (G170)	**Transmit data on G-SST1** Display of the data to be transmitted via **USS interface 1** i001: Display process data word 1 ... i016 Display process data word 16 i017: Display parameter data word 1 ... i020: Display parameter data word 4		Ind: 20 Type: L2	P052 = 3
r812 (G171) (G173)	**Receive data on G-SST2** When USS protocol (P790=2) is selected: Display of data received via **USS interface 2** i001: Display process data word 1 ... i016 Display process data word 16 i017: Display parameter data word 1 ... i020: Display parameter data word 4 When peer-to-peer (P790=5) is selected: Display of data received via **peer-to-peer interface 2** i001: Receive data word 1 ... i005 Receive data word 5 i006: Not in use ... i020 Not in use		Ind: 20 Type: L2	P052 = 3
r813 (G171) (G173)	**Transmit data on G-SST2** When USS protocol (P790=2) is selected: Display of the data to be transmitted via **USS interface 2** i001: Display process data word 1 ... i016 Display process data word 16 i017: Display parameter data word 1 ... i020: Display parameter data word 4 When peer-to-peer (P790=5) is selected: Display of the data to be transmitted via **peer-to-peer interface 2** i001: Transmit data word 1 ... i005 Transmit data word 5 i006: Not in use ... i020 Not in use		Ind: 20 Type: L2	P052 = 3

PNU	Description	Value range [Unit] Steps	No. indices Factory setting Type	See Change (Access / Status)
r814 (G172) (G174)	**Receive data on G-SST3** When USS protocol (P800=2) is selected: Display of data received via **USS interface 3** i001: Display process data word 1 **...** i016 Display process data word 16 i017: Display parameter data word 1 **...** i020: Display parameter data word 4 When peer-to-peer (P800=5) is selected: Display of data received via **peer-to-peer interface 3** i001: Receive data word 1 **...** i005 Receive data word 5 i006: Not in use **...** i020 Not in use	0000 to FFFF H 1	Ind: 20 Type: L2	P052 = 3
r815 (G172) (G174)	**Transmit data on G-SST3** When USS protocol (P800=2) is selected: Display of the data to be transmitted via **USS interface 3** i001: Display process data word 1 **...** i016 Display process data word 16 i017: Display parameter data word 1 **...** i020: Display parameter data word 4 When peer-to-peer (P800=5) is selected: Display of the data to be transmitted via **peer-to-peer interface 3** i001: Transmit data word 1 **...** i005 Transmit data word 5 i006: Not in use **...** i020 Not in use	0000 to FFFF H 1	Ind: 20 Type: L2	P052 = 3

Peer-to-peer interfaces: Enable transmission and receipt of telegrams: If transmission on a peer-to-peer interface is disabled, the associated output drivers are connected to high impedance. If reception is disabled on a peer-to-peer interface, then the telegram failure monitoring function is deactivated.				
P816 * (G173)	**Peer-to-peer 2: Source for data reception enabling command** 0 = binector B0000 1 = binector B0001 etc.	All binector numbers 1	Ind: None FS=1 Type: L2	P052 = 3 P051 = 40 Offline
P817 * (G173)	**Peer-to-peer 2: Source for data transmission enabling command** 0 = binector B0000 1 = binector B0001 etc.	All binector numbers 1	Ind: None FS=1 Type: L2	P052 = 3 P051 = 40 Offline
P818 * (G174)	**Peer-to-peer 3: Source for data reception enabling command** 0 = binector B0000 1 = binector B0001 etc.	All binector numbers 1	Ind: None FS=1 Type: L2	P052 = 3 P051 = 40 Offline
P819 * (G174)	**Peer-to-peer 3: Source for data transmission enabling command** 0 = binector B0000 1 = binector B0001 etc.	All binector numbers 1	Ind: None FS=1 Type: L2	P052 = 3 P051 = 40 Offline

PNU	Description	Value range [Unit] Steps	No. indices Factory setting Type	See Change (Access / Status)

11.39 Deactivation of monitoring functions

WARNING

If monitoring functions are deactivated, there may be a risk to the safety of operating personnel or of substantial property damage if a fault or error actually occurs!

P820 *	**Deactivation of fault messages** The numbers of all fault messages to be deactivated must be entered in this parameter. Fault numbers can be entered in any order. 0 must be entered for any unused indices of the parameter.	0 to 147 1	Ind: 99 FS=0 Type: O2	P052 = 3 P051 = 40 Online
P821 *	**Deactivation of alarms** The numbers of all alarm messages to be deactivated must be entered in this parameter. Alarm numbers can be entered in any order. 0 must be entered for any unused indices of the parameter.	0 to 147 1	Ind: 99 FS=0 Type: O2	P052 = 3 P051 = 40 Online

11.40 Compensation values

r824	**A7006 compensation values** These data contain compensation values for the analog section of electronics board A7006	0 to 65535 1	Ind: 10 Type: O2	P052 = 3
P826 (G163)	**Correction of natural commutation timing** If there is a variation in the current peak value (in spite of a constant firing angle), it can be corrected by offsetting the firing angle reference time of the appropriate line phase in parameter P826. One line phase (UV, UW, VW, VU, WU, WV) is assigned to each parameter index (i001 to i006). Increasing the parameter setting by a value of 1 corresponds to an increase of 1.333 µs in the firing angle (0.024 degrees at 50Hz line frequency), consequently reducing the current peak in the appropriate line phase. Caution: Even an asymmetrical system causes variations in the magnitude of current peaks. However, the system asymmetry may also change.	-100 to 100 * 1.333 [µs] 1.333µs	Ind: 6 FS=0 Type: I2	P052 = 3 P051 = 40 Online
r827	**Internal diagnosis** i001: Number of write access operations to EEPROM i002: Number of Page-Write access operations to EEPROM i003: Counter for DUAL-PORT RAM timeouts	0 to 65535 1	Ind: 3 Type: O2	P052 = 3
r828	**MLFB data** These data contain details about the power section design (model)	0 to 65535 1	Ind: 16 Type: O2	P052 = 3
r829	**A7001 compensation values** These data contain compensation values for the analog section of electronics board A7001	0 to 65535 1	Ind: 68 Type: O2	P052 = 3

11.41 Parameters for DriveMonitor and OP1S

P831 to r849	**Parameters for the Trace function of DriveMonitor** These parameters are settings for the data exchange between DriveMonitor and the SIMOTRAS converter. They must not be changed!			P052 = 3
r850 to P899	**Parameters for the OP1S** These parameters are settings for the data exchange between OP1S and the SIMOTRAS converter. They must not be changed!			P052 = 3

PNU	Description	Value range [Unit] Steps	No. indices Factory setting Type	See Change (Access / Status)

11.42 Profile parameters

P918 (Z110) (Z111)	**CB bus address** Protocol-dependent bus address for communication boards Note: The validity of the bus address is monitored by the communication board. (Bus addresses 0 to 2 are reserved for Master stations on PROFIBUS boards and must not therefore be set for other purposes). If the value is not accepted by the COM BOARD, fault F080 is displayed with fault value 5	0 to 200 1	Ind: 2 FS=3 Type: O2	P052 = 3 P051 = 40 Offline
P927 * (G170) (G171) (G172) (Z110) (Z111)	**Parameterization enable** Enabling of interfaces for parameterization. A parameter value can only be altered via an enabled interface. 0: None 1: Communications board (CB) 2: Parameterizing unit (PMU) 4: G-SST1 serial interface and OP1S 8: Reserved 16: Technology board (TB) 32: G-SST2 serial interface 64: G-SST3 serial interface Setting information: Every interface has a numeric code. The number for one specific interface, or the sum of various numbers assigned to several interfaces, must be entered in this parameter in order to enable the relevant interface(s) for use as a parameterization interface. Example: Factory setting value 6 (=4+2) means that the PMU and G-SST1 interfaces are enabled for parameterization purposes.	0 to 127 1	Ind: None FS=6 Type: V2	P052 = 3 P051 = 40 Offline

PNU	Description	Value range [Unit] Steps	No. indices Factory setting Type	See Change (Access / Status)

11.43 Fault memory, alarm parameters

r947 (G189)	**Fault memory** Display of fault messages generated in response to 8 recent faults. A fault value and fault time is assigned to each fault number (see Section 10 for details of fault numbers and fault values). The interrelationship between the associated parameters is shown in the diagram below. The fault numbers of the last (maximum 8) fault events are stored under the indices of parameter P947. r947.001 displays the fault number of the current (still not acknowledged) fault, index 9 displays the number of the most recent acknowledged fault, index 17 the fault number of the second most recent acknowledged fault, etc. An entry of "0" means that no "earlier" fault has occurred. Since only one fault message can be stored with respect to any fault event on the SIMOTRAS 6SG70, only indices 1, 9, 17, 25, 33, 41, 49 and 57 are relevant. A fault value is assigned to each fault number in the corresponding index of parameter r949. This provides further information about the nature of the fault. In addition, the fault time (the current reading of the hours run counter as the fault occurred (r048)), is stored for each fault in r049. The data for the current (not yet acknowledged) fault are stored as the "Hours run counter reading" in index 1. The data for earlier, already acknowledged faults are stored under the following indices. 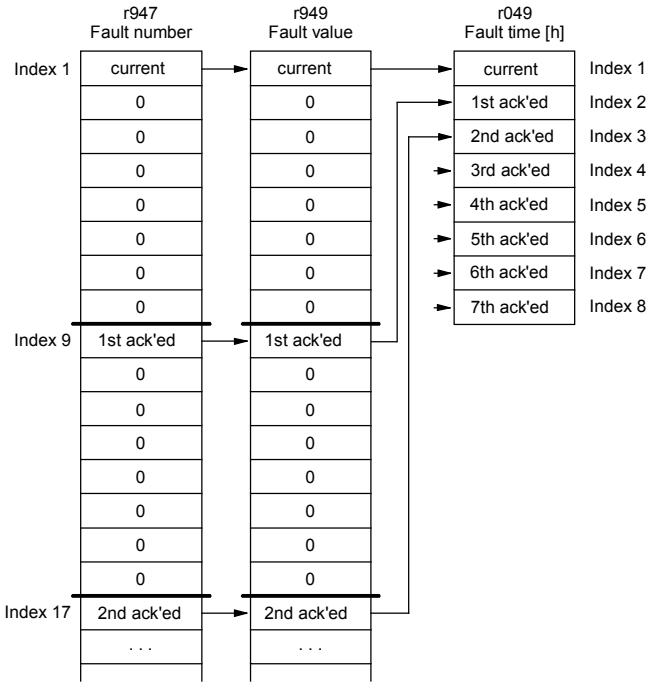 Plaintext information about the fault numbers is available under the corresponding index of parameter r951.		Ind: 64 Type: O2	P052 = 3
r949 (G189)	**Fault value** Fault value of faults, allows more detailed diagnosis for a variety of parameters. The fault values are stored in the same indices as the associated fault numbers (r947) - see parameter r947.		Ind: 64 Type: O2	P052 = 3
r951	**Fault text**	0 to 65535 1	Ind: 101 Type: O2	P052 = 3

PNU	Description	Value range [Unit] Steps	No. indices Factory setting Type	See Change (Access / Status)
r952	**Number of faults** Settings: 0 Deletes the entire fault memory (r947, r949 and r049) by resetting to 0 Note: P952 cannot be reset while a fault is pending >0 Display of the faults stored in the fault memory (r947, r949 and r049)	0 to 65535 1	Ind: None FS=0 Type: O2	P052 = 3 P051 = 40 Offline

11.44 Visualization parameters: Alarms

r953	**Alarm parameter 1** Display of active alarms in bit-coded form (A001 to A016). If one of the alarms between 1 and 16 is generated, the corresponding segment in the display lights up. 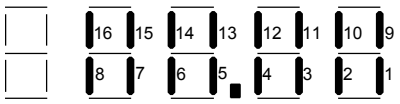 See Section 10.2 for meaning of individual alarms		Ind: None Type: V2	P052 = 3
r954	**Alarm parameter 2** Display of active alarms in bit-coded form (A017 to A032). If one of the alarms between 17 and 32 is generated, the corresponding segment in the display lights up. 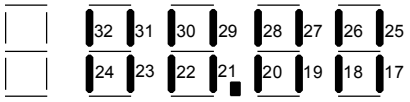 See Section 10.2 for meaning of individual alarms		Ind: None Type: V2	P052 = 3
r955	**Alarm parameter 3** Parameter alarms 3 If one of the alarms between 33 and 48 is generated, the corresponding segment in the display lights up. 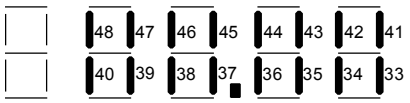		Ind: None Type: V2	P052 = 3
r956	**Alarm parameter 4** Parameter alarms 4 If one of the alarms between 49 and 64 is generated, the corresponding segment in the display lights up. 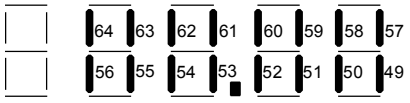		Ind: None Type: V2	P052 = 3
r957	**Alarm parameter 5** Parameter alarms 5 If one of the alarms between 65 and 80 is generated, the corresponding segment in the display lights up. 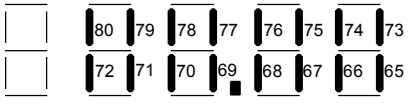		Ind: None Type: V2	P052 = 3

PNU	Description	Value range [Unit] Steps	No. indices Factory setting Type	See Change (Access / Status)
r958	**Alarm parameter 6** Parameter alarms 6 (CB alarms) If one of the alarms between 81 and 96 is generated, the corresponding segment in the display lights up. 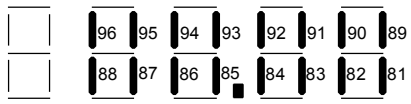		Ind: None Type: V2	P052 = 3
r959	**Alarm parameter 7** Parameter alarms 7 (TB alarms 1) If one of the alarms between 97 and 112 is generated, the corresponding segment in the display lights up. 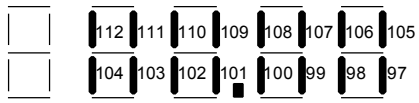		Ind: None Type: V2	P052 = 3
r960	**Alarm parameter 8** Parameter alarms 8 (TB alarms 2) If one of the alarms between 113 and 128 is generated, the corresponding segment in the display lights up. 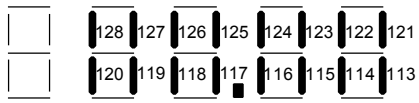		Ind: None Type: V2	P052 = 3

11.45 Device identification

r964	**Parameters for device identification on the PROFIBUS** [SW 2.0 and later] Display parameters to support overview and diagnosis of all nodes on the PROFIBUS-DP during and after commissioning (coding according to PROFIBUS profile V3) i001: Display of the manufacturer of the SIMOTRAS HD 6SG70: SIEMENS = 42 i002: Display of device type: SIMOTRAS HD 6SG70 = 4120 i003: Display of the software version of the SIMOTRAS HD 6SG70 (see r060.001) i004: Display of year of generation of the software of the SIMOTRAS HD 6SG70: y y y y (see r061.001) i005: Display of the month and day of generation of the software of the SIMOTRAS HD 6SG70: d d m m (see r061.003 and r061.002) i006: Display of the controlled axes of the SIMOTRAS HD 6SG70: 1	0 to 65535 1	Ind: 6 Typ: O2	P052 = 1

11.46 Visualization parameters: Control and status word

r967	**Display of control word 1** Visualization parameter for control word 1 (bits 0-15) Identical to r650 (control word 1)		Ind: None Type: V2	P052 = 3
r968	**Display of status word 1** Visualization parameter for status word 1 (bits 0 - 15) Identical to r652 (status word 1)		Ind: None Type: V2	P052 = 3

PNU	Description	Value range [Unit] Steps	No. indices Factory setting Type	See Change (Access / Status)

11.47 Resetting and storing parameters, list of existing and modified P and r parameters

P970 *	**Restore factory setting** Reset parameters to factory setting (default) 0: Parameter reset: All parameters are reset to their original values (factory setting). The parameter is then set automatically to 1. 1: No parameter reset Note: Function can also be selected by setting P051=21.	0 to 1 1	Ind: None FS=1 Type: O2	P052 = 3 P051 = 40 Offline
P971 *	**EEPROM transfer** Transfer of parameter values from RAM to EERPROM on switchover from 0 to 1. It takes approximately 15s to process all values. The PMU remains in value mode for this period.	0 to 1 1	Ind: None FS=0 Type: O2	P052 = 3 P051 = 40 Offline
r980	**List of existing parameter numbers, start** Visualization parameter for displaying the first 100 parameter numbers in the P or r parameter range (0 to 999). The parameters are arranged in ascending sequence. Repetition of a number over several indices means that there are no further parameter numbers in the 0 to 999 range. The list is continued at the parameter whose number is displayed under index 101. See also r989		Ind: 101 Type: O2	P052 = 3
r981	**List of existing parameter numbers, continuation** See r980.		Ind: 101 Type: O2	P052 = 3
r982	**List of existing parameter numbers, continuation** See r980.		Ind: 101 Type: O2	P052 = 3
r983	**List of existing parameter numbers, continuation** See r980.		Ind: 101 Type: O2	P052 = 3
r984	**List of existing parameter numbers, continuation** See r980.		Ind: 101 Type: O2	P052 = 3
r985	**List of existing parameter numbers, continuation** See r980.		Ind: 101 Type: O2	P052 = 3
r986	**List of existing parameter numbers, continuation** See r980.		Ind: 101 Type: O2	P052 = 3
r987	**List of existing parameter numbers, continuation** See r980.		Ind: 101 Type: O2	P052 = 3
r988	**List of existing parameter numbers, continuation** See r980.		Ind: 101 Type: O2	P052 = 3
r989	**List of existing parameter numbers, continuation** Continuation of the list can be found under index 101. Please note 860 = r860 (TECH BOARD installed) 2980 = n980 See also r980.		Ind: 101 Type: O2	P052 = 3
r990	**List of modified parameter numbers, start** Visualization parameter for displaying the first 100 modified parameters in the P or r parameter range (0 to 999). The parameters are arranged in ascending sequence. Repetition of a number over several indices means that there are no further modified parameters in the 0 to 999 range. The list is continued at the parameter whose number is displayed under index 101. See also r999.		Ind: 101 Type: O2	P052 = 3

PNU	Description	Value range [Unit] Steps	No. indices Factory setting Type	See Change (Access / Status)
r991	**List of modified parameter numbers, continuation** See r990.		Ind: 101 Type: O2	P052 = 3
r992	**List of modified parameter numbers, continuation** See r990.		Ind: 101 Type: O2	P052 = 3
r993	**List of modified parameter numbers, continuation** See r990.		Ind: 101 Type: O2	P052 = 3
r994	**List of modified parameter numbers, continuation** See r990.		Ind: 101 Type: O2	P052 = 3
r995	**List of modified parameter numbers, continuation** See r990.		Ind: 101 Type: O2	P052 = 3
r996	**List of modified parameter numbers, continuation** See r990.		Ind: 101 Type: O2	P052 = 3
r997	**List of modified parameter numbers, continuation** See r990.		Ind: 101 Type: O2	P052 = 3
r998	**List of modified parameter numbers, continuation** See r990.		Ind: 101 Type: O2	P052 = 3
r999	**List of modified parameter numbers, continuation** Continuation of the list can be found under index 101. Please note 2990 = n990 See also r990.		Ind: 101 Type: O2	P052 = 3

11.48 Password protection, key/lock mechanism

Key/lock mechanism

To prevent unintended parameterization of the devices and to protect the know-how stored in the parameterization, you can restrict access to the (basic converter) parameters and define your own passwords (=pairs of numbers that you can choose). This done in parameters:

- **U005** key and
- **U006** lock.

If U005 and U006 are parameterized differently, it is only possible to access the following parameters:

- All visualization parameters (rxxx, nxxx)
- All parameters that can be changed with P051 = 0 (See parameter list)
- All "user parameters" (see Parameter U007)

All other parameters neither be read nor altered.
Only when U005 and U006 are parameterized to the same values, are these restrictions removed again.

When using the key-lock-mechanism you should follow this procedure:

1. Program the den lock parameter U006 in both parameter indices with your specific password.
2. Set Parameter P051 to the value 0. This activates the password you have just set (in U006).
   After that, P051 can be set to 40 again and the password protection remains active.

Examples:

Lock	Key	Result
U006.1 = 0 (factory setting) U006.2 = 0	U005.1 = 0 (factory setting) U005.2 = 0	The key and lock are parameterized identically, all parameters are accessible
U006.1 = 12345 U006.2 = 54321	U005.1 = 0 U005.2 = 0	The key and lock are parameterized differently, only the visualization parameters, the parameters that can be altered with P051=0, and the "user parameters" are accessible
U006.1 = 12345 U006.2 = 54321	U005.1 = 12345 U005.2 = 54321	The key and lock are parameterized identically, all parameters are accessible

NOTE: If you forget or lose your password, you can only regain access to all parameters by restoring the factory setting (P051=21).

U005 (2005) *	**Key** [SW 1.7 and later] Parameter for entering the keys for the key/lock mechanism	0 to 65535 1	Ind: 2 FS=0 Type: O2	P052 = 3 P051 = 0 Online

PNU	Description	Value range [Unit] Steps	No. indices Factory setting Type	See Change (Access / Status)
U006 (2006) *	**Lock** [SW 1.7 and later] Parameter for entering the password for the key/lock mechanism	0 to 65535 1	Ind: 2 FS=0 Type: O2	P052 = 3 P051 = 40 Online
U007 (2007) *	**Numbers of the user parameters** [SW 1.7 and later] Parameters for entering the numbers of those parameters that are to be accessible if the key and lock are set differently. NOTE: Parameters U000 to U999 must be entered as 2000 to 2999	0 to 999 2000 to 2005 2008 to 2999 1	Ind: 100 FS=0 Type: O2	P052 = 3 P051 = 40 Online

11.49 Processor utilization

n009 (2009)	**Processor utilization** This parameter is particularly relevant as regards the selection of function blocks of technology software in the basic unit (option S00) and the definition of the time slices in which these function blocks are processed (see also Section 8, Function Diagram B101 and parameters U950 to U952). i001: Current total processor utilization (=K9990) i002: Extrapolated total processor utilization for line frequency = 65Hz (=K9991) i003: Current total processor utilization by programs in time slice 10 (=K9992) i004: Current total processor utilization by programs in time slice 4 (=K9993) i005: Current total processor utilization by programs in time slice 2 (=K9994) i006: Current total processor utilization by programs in time slice 1 (=K9995)	0.0 to 100.0 [%] 0.1%	Ind: 6 Type: O2	P052 = 3

11.50 Display parameters for technology functions with S00

Connector/binector converters				
n010 (2010) S00 (B120)	**Connector/binector converter 1** (bit field 1) **FB 10** Displays the status of the bits in the bit field on the bars of the 7-segment display 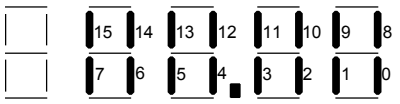 Segment ON: Bit (binector) = log. "1" state Segment OFF: Bit (binector) = log. "0" state		Ind: None Type: V2	P052 = 3
n011 (2011) S00 (B120)	**Connector/binector converter 2** (bit field 2) **FB 11** As for n010		Ind: None Type: V2	P052 = 3
n012 (2012) S00 (B120)	**Connector/binector converter 3** (bit field 3) **FB 12** As for n010		Ind: None Type: V2	P052 = 3

Binector/connector converters				
n013 (2013) S00 (B121)	**Binector/connector converter 1 (bit field 4)** **FB 13** Displays the status of the bits in the bit field on the bars of the 7-segment display 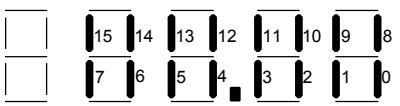 Segment ON: Bit = log. "1" state Segment OFF: Bit = log. "0" state		Ind: None Type: V2	P052 = 3

PNU	Description	Value range [Unit] Steps	No. indices Factory setting Type	See Change (Access / Status)
n014 (2014) S00 (B121)	**Binector/connector converter 2** (bit field 5) **FB 14** As for n013		Ind: None Type: V2	P052 = 3
n015 (2015) S00 (B121)	**Binector/connector converter 3** (bit field 6) **FB 15** As for n013		Ind: None Type: V2	P052 = 3
Technology controller				
n016 (2016) S00 (B170)	**Actual value display** **FB 260**	-200.0 to 199.9 [%] 0.1	Ind: None Type: I2	P052 = 3
n017 (2017) S00 (B170)	**Setpoint display** **FB 260**	-200.0 to 199.9 [%] 0.1	Ind: None Type: I2	P052 = 3
n018 (2018) S00 (B170)	**Display of effective Kp factor** **FB 260**	0.00 to 30.00 0.01	Ind: None Type: O2	P052 = 3
n019 (2019) S00 (B170)	**Display of technology controller output** **FB 260**	-200.0 to 199.9 [%] 0.1	Ind: None Type: I2	P052 = 3
Velocity/speed calculator				
n020 (2020) S00 (B190)	**Display of actual speed** **FB 261**	-200.0 to 199.9 [%] 0.1	Ind: None Type: I2	P052 = 3
n021 (2021) S00 (B190)	**Display of actual velocity** **FB 261**	-32768 to 32767 [m/s] 0.001	Ind: None Type: I2	P052 = 3
n022 (2022) S00 (B190)	**Display of setpoint velocity** **FB 261**	-32768 to 32767 [m/s] 0.001	Ind: None Type: I2	P052 = 3
n023 (2023) S00 (B190)	**Display of setpoint speed** **FB 261**	-200.0 to 199.9 [%] 0.1	Ind: None Type: I2	P052 = 3

11.51 Miscellaneous

n024 (2024) (G145) (Z120)	**Display of the speed actual value in rpm** [SW 2.0 and later] i001: Display of the speed actual value from the pulse generator input of basic device X173 i002: Display of speed actual value from tacho module SBP	-32768 to 32767 [rpm] 1	Ind: 2 Type: I2	P052 = 2
U040 **U041** (2040) (2041)	**Reserved for later use** [SW 2.0 and later] These parameters must not be changed by the user!			P052 = 3

PNU	Description	Value range [Unit] Steps	No. indices Factory setting Type	See Change (Access / Status)
n042 (2042)	**Warning memory** [SW 2.0 and later] Warning memory for flagging warnings that have occurred since the electronics supply voltage was last switched on. The contents of the warning memory are lost when the electronics supply voltage is switched off and can be deleted with U043. The warnings are displayed in bit code as for r953 to r960 i001: Display of warnings 1 to 16 i002: Display of warnings 17 to 32 i003: Display of warnings 33 to 48 i004: Display of warnings 49 to 64 i005: Display of warnings 65 to 80 i006: Display of warnings 81 to 96 i007: Display of warnings 97 to 112 i008: Display of warnings 113 to 128 See Section 10.2 for the meaning of the individual warnings		Ind: 8 Type: V2	P052 = 2
U043 * (2043)	**Deleting the warning memory** [SW 2.0 and later] Settings: 0 Deletes the entire warning memory n042 by resetting it to 0. Subsequently the parameter is automatically set back to value 1. 1 Not active	0 to 1 1	Ind: none FS=1 Type: O2	P052 = 3

U044 (2044) * (G121)	**Connector display, decimal** [SW 2.0 and later] Selects those connectors whose value is to be displayed as a decimal with n045 i001: Selects the connector to be displayed with n045.01 i002: Selects the connector to be displayed with n045.02 i003: Selects the connector to be displayed with n045.03 i004: Selects the connector to be displayed with n045.04 i005: Selects the connector to be displayed with n045.05	All connector numbers 1	Ind: 5 FS=0 Type: L2	P052 = 3 P051 =40 Online
n045 (2045) (G121)	**Connector display, decimal** [SW 2.0 and later] Decimal display with sign of the values of the connectors selected with U044. In the case of double-word connectors the H word is displayed. i001: Display of the connector selected with U044.01 i002: Display of the connector selected with U044.02 i003: Display of the connector selected with U044.03 i004: Display of the connector selected with U044.04 i005: Display of the connector selected with U044.05	-32768 to 32767 1	Ind:5 Type: I2	P052 = 3
U046 (2046) * (G121)	**Connector display, hexadecimal** [SW 2.0 and later] Selection of connectors whose value is to be displayed as a hexadecimal value with n047l i001: Selection of the connector to be displayed with n047.01 i002: Selection of the connector to be displayed with n047.02 i003: Selection of the connector to be displayed with n047.03 i004: Selection of the connector to be displayed with n047.04 i005: Selection of the connector to be displayed with n047.05	All connector numbers 1	Ind: 5 FS=0 Type: L2	P052 = 3 P051 =40 Online
n047 (2047) (G121)	**Connector display, hexadecimal** [SW 2.0 and later] Hexadecimal display of values of connectors selected with U046. In the case of double-word connectors the H word is displayed. i001: Display of the connector selected with U046.01 i002: Display of the connector selected with U046.02 i003: Display of the connector selected with U046.03 i004: Display of the connector selected with U046.04 i005: Display of the connector selected with U046.05	0000h to FFFFh 1	Ind:5 Type: L2	P052 = 3

PNU	Description	Value range [Unit] Steps	No. indices Factory setting Type	See Change (Access / Status)
U049 (2049)	**OP1S operating display** [SW 1.9 and later] Function parameter for selecting parameters whose values must be included in the operating display of the optional OP1S convenience operator panel. i001: 1st line on left i002: 1st line on right i003: 2nd line (actual value), visualization parameter only i004: 3rd line (setpoint) i005: 4th line	0 to 3999 1	Ind:5 FS= i001: 19 i002: 38 i003: 25 i004: 28 i005: 59 Type: O2	P052 = 3 P051 =40 Online

Connector type converters 2 connectors are converted into one double word connector.				
U098 (2098) * S00 (B151)	**Operands for 1st connector type converter** (result = KK9498) **FB 298** **Operands for 2nd connector type converter** (result = KK9499) **FB 299** [SW 1.9 and later] i001: Source for the low word of output connector KK9498 i002: Source for the high word of output connector KK9498 i003: Source for the low word of output connector KK9499 i004: Source for the high word of output connector KK9499 Settings: 0 = connector K0000 1 = connector K0001 etc.	All connector numbers 1	Ind: 4 FS=0 Type: L2	P052 = 3 P051 = 40 Offline

11.52 Settable fixed values

U099 (2099) S00 (B110)	**Fixed value** [SW 1.8 and later] The values set in Index .001 to .100 are connected to connectors K9501 to K9600	-199.99 to 199.99 [%] 0.01%	Ind: 100 FS=0.00 Type: I2	P052 = 3 P051 = 40 Online

11.53 Triggering of faults and alarms

U100 (2100) * S00 (B115)	**Source for the activation of F023 and F019** **FB 2, FB 286** Selection of the binectors that activate fault messages F023 or F019 on log. "1" 0 = Binector B0000 1 = Binector B0001 etc. Up to SW 1.7: F023 (without fault value) if binector = 1 (FB 2) SW 1.8 and later: i001: F023 with fault value 1 (FB 2) i002: F023 with fault value 2 i003: F023 with fault value 3 i004: F023 with fault value 4 i005: F019 with fault value 1 (FB 286) i006: F019 with fault value 2 i007: F019 with fault value 3 i008: F019 with fault value 4	All binector numbers 1	Ind: 8 FS= i001: 9580 i002: 0 i003: 0 i004: 0 i005: 0 i006: 0 i007: 0 i008: 0 Type: L2	P052 = 3 P051 = 40 Offline

PNU	Description	Value range [Unit] Steps	No. indices Factory setting Type	See Change (Access / Status)
U101 (2101) * S00 (B115)	**Source for the activation of F024 and F020 FB 3, FB 287** Selection of the binectors that activate fault messages F024 or F020 on log. "1" 0 = Binector B0000 1 = Binector B0001 etc. Up to SW 1.7: F024 (without fault value) if binector = 1 (FB 3) SW 1.8 and later: i001: F024 with fault value 1 (FB 3) i002: F024 with fault value 2 i003: F024 with fault value 3 i004: F024 with fault value 4 i005: F020 with fault value 1 (FB 287) i006: F020 with fault value 2 i007: F020 with fault value 3 i008: F020 with fault value 4	All binector numbers 1	Ind: 8 FS= i001: 9582 i002: 0 i003: 0 i004: 0 i005: 0 i006: 0 i007: 0 i008: 0 Type: L2	P052 = 3 P051 = 40 Offline
U102 (2102) * S00 (B115)	**Source for the activation of F033 and F053 FB 4, FB 288** Selection of the binectors that activate fault messages F033 or F053 on log. "1" 0 = Binector B0000 1 = Binector B0001 etc. Up to SW 1.7: F033 (without fault value) if binector = 1 (FB 4) SW 1.8 and later: i001: F033 with fault value 1 (FB 4) i002: F033 with fault value 2 i003: F033 with fault value 3 i004: F033 with fault value 4 i005: F053 with fault value 1 (FB 288) i006: F053 with fault value 2 i007: F053 with fault value 3 i008: F053 with fault value 4	All binector numbers 1	Ind: 8 FS=0 Type: L2	P052 = 3 P051 = 40 Offline
U103 (2103) * S00 (B115)	**Source for the activation of F034 and F054 FB 5, FB 289** Selection of the binectors that activate fault messages F034 or F054 on log. "1" 0 = Binector B0000 1 = Binector B0001 etc. Up to SW 1.7: F034 (without Fault value) if binector = 1 (FB 5) SW 1.8 and later: i001: F034 with fault value 1 (FB 5) i002: F034 with fault value 2 i003: F034 with fault value 3 i004: F034 with fault value 4 i005: F054 with fault value 1 (FB 289) i006: F054 with fault value 2 i007: F054 with fault value 3 i008: F054 with fault value 4	All binector numbers 1	Ind: 8 FS=0 Type: L2	P052 = 3 P051 = 40 Offline
U104 (2104) * S00 (B115)	**Source for the activation of A023 and A019 FB 6, FB 256** Selection of the binectors that activate alarm A023 or A019 on log. "1" 0 = Binector B0000 1 = Binector B0001 etc. Up to SW 1.7: A023 (FB 6) SW 1.8 and later: i001: A023 (FB 6) i002: A019 (FB 256)	All binector numbers 1	Ind: 2 FS= i001: 9552 i002: 0 Type: L2	P052 = 3 P051 = 40 Offline

PNU	Description	Value range [Unit] Steps	No. indices Factory setting Type	See Change (Access / Status)
U105 (2105) * S00 (B115)	**Source for the activation of A024 and A020** **FB 7, FB 257** Selection of the binectors that activate alarm A024 or A020 on log. "1" 0 = Binector B0000 1 = Binector B0001 etc. Up to SW 1.7: A024 (FB 7) SW 1.8 and later: i001: A024 (FB 7) i002: A020 (FB 257)	All binector numbers 1	Ind: 2 FS=0 Type: L2	P052 = 3 P051 = 40 Offline
U106 (2106) * S00 (B115)	**Source for the activation of A033 and A053** **FB 8, FB 258** Selection of the binectors that activate alarm A033 or A053 on log. "1" 0 = Binector B0000 1 = Binector B0001 etc. Up to SW 1.7: A033 (FB 8) SW 1.8 and later: i001: A033 (FB 8) i002: A053 (FB 258)	All binector numbers 1	Ind: 2 FS=0 Type: L2	P052 = 3 P051 = 40 Offline
U107 (2107) * S00 (B115)	**Source for the activation of A034 and A054** **FB 9, FB 259** Selection of the binectors that activate alarm A034 or A054 on log. "1" 0 = Binector B0000 1 = Binector B0001 etc. Up to SW 1.7: A034 (FB 9) SW 1.8 and later: i001: A034 (FB 9) i002: A054 (FB 259)	All binector numbers 1	Ind: 2 FS=0 Type: L2	P052 = 3 P051 = 40 Offline

11.54 Connector/binector converters, binector/connector converters

U110 (2110) * S00 (B120)	**Source for connector/binector converter 1** **FB 10** Connector which must be converted to binectors B9052 (bit 0) to B9067 (bit 15) 0 = connector K0000 1 = connector K0001 etc.	All connector numbers 1	Ind: None FS=9210 Type: L2	P052 = 3 P051 = 40 Offline
U111 (2111) * S00 (B120)	**Source for connector/binector converter 2** **FB 11** Connector which must be converted to binectors B9068 (bit 0) to B9083 (bit 15) 0 = connector K0000 1 = connector K0001 etc.	All connector numbers 1	Ind: None FS=9211 Type: L2	P052 = 3 P051 = 40 Offline
U112 (2112) * S00 (B120)	**Source for connector/binector converter 3** **FB 12** Connector which must be converted to binectors B9084 (bit 0) to B9099 (bit 15) 0 = connector K0000 1 = connector K0001 etc.	All connector numbers 1	Ind: None FS=0 Type: L2	P052 = 3 P051 = 40 Offline

PNU	Description	Value range [Unit] Steps	No. indices Factory setting Type	See Change (Access / Status)
U113 (2113) * S00 (B121)	**Source for binector/connector converter 1** **FB 13** Binectors which must be converted to connector K9113 i001: 1st binector (bit 0) i002: 2nd binector (bit 1) ... i016: 16th binector (bit 15) Settings: 0 = binector B0000 1 = binector B0001 etc.	All binector numbers 1	Ind: 16 FS= i001: 0 i002: 0 i003: 14 i004: 0 i005: 0 i006: 12 i007: 0 i008: 514 i009: 0 i010: 0 i011: 0 i012: 500 i013: 502 i014: 510 i015: 512 i016: 0 Type: L2	P052 = 3 P051 = 40 Offline
U114 (2114) * S00 (B121)	**Source for binector/connector converter 2** **FB 14** Binectors which must be converted to connector K9114 i001: 1st binector (bit 0) i002: 2nd binector (bit 1) ... i016: 16th binector (bit 15) Settings: 0 = binector B0000 1 = binector B0001 etc.	All binector numbers 1	Ind: 16 FS= i001: 0 i002: 0 i003: 0 i004: 0 i005: 0 i006: 0 i007: 506 i008: 508 i009: 0 i010: 0 i011: 0 i012: 0 i013: 16 i014: 10 i015: 0 i016: 504 Type: L2	P052 = 3 P051 = 40 Offline
U115 (2115) * S00 (B121)	**Source for binector/connector converter 3** **FB 15** Binectors which must be converted to connector K9115 i001: 1st binector (bit 0) i002: 2nd binector (bit 1) ... i016: 16th binector (bit 15) Settings: 0 = binector B0000 1 = binector B0001 etc.	All binector numbers 1	Ind: 16 FS= i001: 9170 i002: 9173 i003: 136 i004: 139 i005: 141 i006: 143 i007: 145 i008: 147 i009: 149 i010: 151 i011: 153 i012: 9361 i013: 157 i014: 9382 i015: 9381 i016: 211 Type: L2	P052 = 3 P051 = 40 Offline

11.55 Binector/connector converter for serial interfaces

U116 (2116) * (G170)	**Source for binector/connector converter for GSST1** Binectors which must be converted to connector K2020 i001: 1st binector (bit 0) i002: 2nd binector (bit 1) ... i016: 16th binector (bit 15) Settings: 0 = binector B0000 1 = binector B0001 etc.	All binector numbers 1	Ind: 16 FS=0 Type: L2	P052 = 3 P051 = 40 Offline

PNU	Description	Value range [Unit] Steps	No. indices Factory setting Type	See Change (Access / Status)
U117 (2117) * (G171) (G173)	**Source for binector/connector converter for GSST2** Binectors which must be converted to connector K6020 i001: 1st binector (bit 0) i002: 2nd binector (bit 1) ... i016: 16th binector (bit 15) Settings: 0 = binector B0000 1 = binector B0001 etc.	All binector numbers 1	Ind: 16 FS=0 Type: L2	P052 = 3 P051 = 40 Offline
U118 (2118) * (G172) (G174)	**Source for binector/connector converter for GSST3** Binectors which must be converted to connector K9020 i001: 1st binector (bit 0) i002: 2nd binector (bit 1) ... i016: 16th binector (bit 15) Settings: 0 = binector B0000 1 = binector B0001 etc.	All binector numbers 1	Ind: 16 FS=0 Type: L2	P052 = 3 P051 = 40 Offline

U119 (2119) *	**Parameters for the Trace function of DriveMonitor** This parameter is a setting for the exchange of process data between DriveMonitor and the SIMOTRAS converter. It must not be changed!			

11.56 Mathematical functions

Adder / subtractor

The 3 operands of a function block are selected by 3 indices each of a parameter.

U120 to U131:
The connectors selected via indices i001 and i002 are added, the connector selected via index i003 is subtracted.

U120 to U122 [SW 1.8 and later]:
The connectors selected via indices i004 and i005 are added, the connector selected via index i006 is subtracted.

The result is limited to -200.00 to +199.99% and applied to the connector stated.

U120 (2120) * S00 (B125)	**Operands for 1st adder / subtractor** (result = K9120) **Operands for 13th adder / subtractor** (result = K9132) (SW 1.8 and later) 0 = Connector K0000 1 = Connector K0001 etc.	**FB 20** **FB 32**	All connector numbers 1	Ind: 6 FS=0 Type: L2	P052 = 3 P051 = 40 Offline
U121 (2121) * S00 (B125)	**Operands for 2nd adder / subtractor** (result = K9121) **Operands for 14th adder / subtractor** (result = K9133) [SW 1.8 and later] 0 = Connector K0000 1 = Connector K0001 etc.	**FB 21** **FB 33**	All connector numbers 1	Ind: 6 FS=0 Type: L2	P052 = 3 P051 = 40 Offline
U122 (2122) * S00 (B125)	**Operands for 3rd adder / subtractor** (result = K9122) **Operands for 14th adder / subtractor** (result = K9134) [SW 1.8 and later] 0 = Connector K0000 1 = Connector K0001 etc.	**FB 22** **FB 34**	All connector numbers 1	Ind: 6 FS=0 Type: L2	P052 = 3 P051 = 40 Offline
U123 (2123) * S00 (B125)	**Operands for 4th adder / subtracter** (result = K9123) 0 = connector K0000 1 = connector K0001 etc.	**FB 23**	All connector numbers 1	Ind: 3 FS=0 Type: L2	P052 = 3 P051 = 40 Offline

PNU	Description	Value range [Unit] Steps	No. indices Factory setting Type	See Change (Access / Status)
U124 (2124) * S00 (B125)	**Operands for 5th adder / subtracter** (result = K9124) **FB 24** 0 = connector K0000 1 = connector K0001 etc.	All connector numbers 1	Ind: 3 FS=0 Type: L2	P052 = 3 P051 = 40 Offline
U125 (2125) * S00 (B125)	**Operands for 6th adder / subtracter** (result = K9125) **FB 25** 0 = connector K0000 1 = connector K0001 etc.	All connector numbers 1	Ind: 3 FS=0 Type: L2	P052 = 3 P051 = 40 Offline
U126 (2126) * S00 (B125)	**Operands for 7th adder / subtracter** (result = K9126) **FB 26** 0 = connector K0000 1 = connector K0001 etc.	All connector numbers 1	Ind: 3 FS=0 Type: L2	P052 = 3 P051 = 40 Offline
U127 (2127) * S00 (B125)	**Operands for 8th adder / subtracter** (result = K9127) **FB 27** 0 = connector K0000 1 = connector K0001 etc.	All connector numbers 1	Ind: 3 FS=0 Type: L2	P052 = 3 P051 = 40 Offline
U128 (2128) * S00 (B125)	**Operands for 9th adder / subtracter** (result = K9128) **FB 28** 0 = connector K0000 1 = connector K0001 etc.	All connector numbers 1	Ind: 3 FS=0 Type: L2	P052 = 3 P051 = 40 Offline
U129 (2129) * S00 (B125	**Operands for 10th adder / subtracter** (result = K9129) **FB 29** 0 = connector K0000 1 = connector K0001 etc.	All connector numbers 1	Ind: 3 FS=0 Type: L2	P052 = 3 P051 = 40 Offline
U130 (2130) * S00 (B125)	**Operands for 11th adder / subtracter** (result = K9130) **FB 30** 0 = connector K0000 1 = connector K0001 etc.	All connector numbers 1	Ind: 3 FS=0 Type: L2	P052 = 3 P051 = 40 Offline
U131 (2131) * S00 (B125)	**Operands for 12th adder / subtracter** (result = K9131) **FB 31** 0 = connector K0000 1 = connector K0001 etc.	All connector numbers 1	Ind: 3 FS=0 Type: L2	P052 = 3 P051 = 40 Offline

Adders / subtracters for double word connectors

The 3 operands of a function block are selected in each case via the three indices of a parameter.

The result is switched to a double word connector and a connector.
The double word connector is limited to between -200.00 and +199.99%.
The connector is limited to between –0.003052 and +0.003052% (= value range of LOW word of a double word connector = ±200% / 65536)

U132 (2132) * S00 (B151)	**Operands for 1st adder / subtracter** **FB 48** **Operands for 2nd adder / subtracter** **FB 49** [SW 1.9 and later] 1st adder / subtracter: result **=** KK9490 and K9491 2nd adder / subtracter: result **=** KK9492 and K9493 i001: Addition value for 1st adder/subtracter i002: Addition value for 1st adder/subtracter i003: Subtraction value for 1st adder/subtracter i004: Addition value for 2nd adder/subtracter i005: Addition value for 2nd adder/subtracter i006: Subtraction value for 2nd adder/subtracter Settings: 0 = connector K0000 1 = connector K0001 etc.	All connector numbers 1	Ind: 6 FS=0 Type: L2	P052 = 3 P051 = 40 Offline

PNU	Description	Value range [Unit] Steps	No. indices Factory setting Type	See Change (Access / Status)
Sign inverters	The contents of the connector selected in the parameter are negated (two's complement). The result is applied to the specified connector.			
U135 (2135) * S00 (B125)	**Source for 1st sign inverter** (result = K9135) **FB 35** 0 = connector K0000 1 = connector K0001 etc.	All connector numbers 1	Ind: None FS=0 Type: L2	P052 = 3 P051 = 40 Offline
U136 (2136) * S00 (B125)	**Source for 2nd sign inverter** (result = K9136) **FB 36** 0 = connector K0000 1 = connector K0001 etc.	All connector numbers 1	Ind: None FS=0 Type: L2	P052 = 3 P051 = 40 Offline
U137 (2137) * S00 (B125)	**Source for 3rd sign inverter** (result = K9137) **FB 37** 0 = connector K0000 1 = connector K0001 etc.	All connector numbers 1	Ind: None FS=0 Type: L2	P052 = 3 P051 = 40 Offline
U138 (2138) * S00 (B125)	**Source for 4th sign inverter** (result = K9138) **FB 38** 0 = connector K0000 1 = connector K0001 etc.	All connector numbers 1	Ind: None FS=0 Type: L2	P052 = 3 P051 = 40 Offline
Switchable sign inverters	The contents of the connector entered in the parameter for selection of a source is switched through, depending on the state of the binector entered in the parameter for control bit selection, as an unchanged value (when control bit = 0) or as a negated value (two's complement, when control bit = 1). The result is applied to the specified connector.			
U140 (2140) * S00 (B125)	**Source for 1st switchable sign inverter** **FB 40** Result = K9140 0 = connector K0000 1 = connector K0001 etc.	All connector numbers 1	Ind: None FS=0 Type: L2	P052 = 3 P051 = 40 Offline
U141 (2141) * S00 (B125)	**Control bit for 1st switchable sign inverter** **FB 40** 0 = binector B0000 1 = binector B0001 etc.	All binector numbers 1	Ind: None FS=0 Type: L2	P052 = 3 P051 = 40 Offline
U142 (2142) * S00 (B125)	**Source for 2nd switchable sign inverter** **FB 41** Result = K9141 0 = connector K0000 1 = connector K0001 etc.	All connector numbers 1	Ind: None FS=0 Type: L2	P052 = 3 P051 = 40 Offline
U143 (2143) * S00 (B125)	**Control bit for 2nd switchable sign inverter** **FB 41** 0 = binector B0000 1 = binector B0001 etc.	All binector numbers 1	Ind: None FS=0 Type: L2	P052 = 3 P051 = 40 Offline
Divider	The two operands (x1, x2) for each divider are selected via 2 indices each of the parameter: Index i001 = x1, index i002 = x2 Index i003 = x1, index i004 = x2 [SW 1.8 and later] Formula: $y = \frac{x1 * 100\%}{x2}$ For division by 0 (x2=0) the following applies: for x1 > 0: y = +199.99% for x1 = 0: y = 0.00% for x1 < 0: y = -200.00% y is limited to -200.00 to +199.99% and applied to the connector stated.			
U145 (2145) * S00 (B131)	**Operands for 1st divider** (result = K9145) **FB 45** **Operands for 4th divider** (result = K9142) **FB 42** 0 = Connector K0000 1 = Connector K0001 etc.	All connector numbers 1	Ind: 4 FS=1 Type: L2	P052 = 3 P051 = 40 Offline

PNU	Description		Value range [Unit] Steps	No. indices Factory setting Type	See Change (Access / Status)
U146 (2146) * S00 (B131)	**Operands for 2nd divider** (result = K9146) **Operands for 5th divider** (result = K9143) 0 = Connector K0000 1 = Connector K0001 etc.	**FB 46** **FB 43**	All connector numbers 1	Ind: 4 FS=1 Type: L2	P052 = 3 P051 = 40 Offline
U147 (2147) * S00 (B131)	**Operands for 3rd divider** (result = K9147) **Operands for 6th divider** (result = K9144) 0 = Connector K0000 1 = Connector K0001 etc.	**FB 47** **FB 44**	All connector numbers 1	Ind: 4 FS=1 Type: L2	P052 = 3 P051 = 40 Offline

Multipliers

The two operands (x1, x2) for each multiplier are selected via 2 indices of the parameter each:
Index i001 = x1, Index i002 = x2
Index i003 = x1, Index i004 = x2 [SW 1.8 and later]
Index i005 = x1, Index i006 = x2 [SW 1.8 and later]

Formula: $y = \frac{x1 * x2}{100\%}$

y is limited to -200.00 to +199.99% and applied to the connector stated.

PNU	Description		Value range [Unit] Steps	No. indices Factory setting Type	See Change (Access / Status)
U150 (2150) * S00 (B130)	**Operands for 1st multiplier** (result = K9150) **Operands for 5th multiplier** (result = K9430) **Operands for 9th multiplier** (result = K9431) 0 = Connector K0000 1 = Connector K0001 etc.	**FB 50** **FB 290** **FB 291**	All connector numbers 1	Ind: 6 FS= i001: 9229 i002: 401 i003: 0 i004: 0 i005: 0 i006: 0 Type: L2	P052 = 3 P051 = 40 Offline
U151 (2151) * S00 (B130)	**Operands for 2nd multiplier** (result = K9151) **Operands for 6th multiplier** (result = K9432) **Operands for 10th multiplier** (result = K9433) 0 = Connector K0000 1 = Connector K0001 etc.	**FB 51** **FB 292** **FB 293**	All connector numbers 1	Ind: 6 FS=0 Type: L2	P052 = 3 P051 = 40 Offline
U152 (2152) * S00 (B130)	**Operands for 3rd multiplier** (result = K9152) **Operands for 7th multiplier** (result = K9434) **Operands for 11th multiplier** (result = K9435) 0 = Connector K0000 1 = Connector K0001 etc.	**FB 52** **FB 294** **FB 295**	All connector numbers 1	Ind: 6 FS=0 Type: L2	P052 = 3 P051 = 40 Offline
U153 (2153) * S00 (B130)	**Operands for 4th multiplier** (result = K9153) **Operands for 8th multiplier** (result = K9436) **Operands for 12th multiplier** (result = K9437) 0 = Connector K0000 1 = Connector K0001 etc.	**FB 53** **FB 296** **FB 297**	All connector numbers 1	Ind: 6 FS=0 Type: L2	P052 = 3 P051 = 40 Offline

High-resolution multipliers/dividers

The three operands are selected via the three indices of the parameter

i.e. index i001 = x1, index i002 = x2, index i003 = x3

Equations: $x4(32bit) = x1 * x2$, $y = \frac{x4}{x3} = \frac{x1 * x2}{x3}$

Applicable for division by 0 (x2=0):

When x1 > 0: y = +199.99%
When x1 = 0: y = 0.00%
When x1 < 0: y = -200.00%

y is limited to -200.00 to +199.99% and applied to the specified connector.

PNU	Description		Value range [Unit] Steps	No. indices Factory setting Type	See Change (Access / Status)
U155 (2155) * S00 (B131)	**Operands for 1st multiplier/divider** (result = K9155) 0 = connector K0000 1 = connector K0001 etc.	**FB 55**	All connector numbers 1	Ind: 3 FS=1 Type: L2	P052 = 3 P051 = 40 Offline

PNU	Description		Value range [Unit] Steps	No. indices Factory setting Type	See Change (Access / Status)
U156 (2156) * S00 (B131)	**Operands for 2nd multiplier/divider** (result = K9156) 0 = connector K0000 1 = connector K0001 etc.	**FB 56**	All connector numbers 1	Ind: 3 FS=1 Type: L2	P052 = 3 P051 = 40 Offline
U157 (2157) * S00 (B131)	**Operands for 3rd multiplier/divider** (result = K9157) 0 = connector K0000 1 = connector K0001 etc.	**FB 57**	All connector numbers 1	Ind: 3 FS=1 Type: L2	P052 = 3 P051 = 40 Offline
Absolute-value generator with filter					
U160 (2160) * S00 (B135)	**Source for input quantity for 1st abs.-value generator with filter** 0 = connector K0000 1 = connector K0001 etc.	**FB 60**	All connector numbers 1	Ind: None FS=0 Type: L2	P052 = 3 P051 = 40 Offline
U161 (2161) * S00 (B135)	**Signal injection mode for 1st abs.-value generator with filter** 0 Injection of signal with correct sign 1 Injection of absolute value of signal 2 Injection of signal with sign, inverted 3 Injection of absolute value of signal, inverted	**FB 60**	0 to 3 1	Ind: None FS=0 Type: O2	P052 = 3 P051 = 40 Offline
U162 (2162) S00 (B135)	**Filter time for 1st abs.-value generator with filter**	**FB 60**	0 to 10000 [ms] 1	Ind: None FS=0 Type: O2	P052 = 3 P051 = 40 Offline
U163 (2163) * S00 (B135)	**Source for input quantity for 2nd abs.-value generator with filter** 0 = connector K0000 1 = connector K0001 etc.	**FB 61**	All connector numbers 1	Ind: None FS=0 Type: L2	P052 = 3 P051 = 40 Offline
U164 (2164) * S00 (B135)	**Signal injection mode for 2nd abs.-value generator with filter** 0 Injection of signal with correct sign 1 Injection of absolute value of signal 2 Injection of signal with sign, inverted 3 Injection of absolute value of signal, inverted	**FB 61**	0 to 3 1	Ind: None FS=0 Type: O2	P052 = 3 P051 = 40 Offline
U165 (2165) S00 (B135)	**Filter time for 2nd abs.-value generator with filter**	**FB 61**	0 to 10000 [ms] 1	Ind: None FS=0 Type: O2	P052 = 3 P051 = 40 Offline
U166 (2166) * S00 (B135)	**Source for input quantity for 3rd abs.-value generator with filter** 0 = connector K0000 1 = connector K0001 etc.	**FB 62**	All connector numbers 1	Ind: None FS=0 Type: L2	P052 = 3 P051 = 40 Offline
U167 (2167) * S00 (B135)	**Signal injection mode for 3rd abs.-value generator with filter** 0 Injection of signal with correct sign 1 Injection of absolute value of signal 2 Injection of signal with sign, inverted 3 Injection of absolute value of signal, inverted	**FB 62**	0 to 3 1	Ind: None FS=0 Type: O2	P052 = 3 P051 = 40 Offline
U168 (2168) S00 (B135)	**Filter time for 3rd abs.-value generator with filter**	**FB 62**	0 to 10000 [ms] 1	Ind: None FS=0 Type: O2	P052 = 3 P051 = 40 Offline
U169 (2169) * S00 (B135)	**Source for input quantity for 4th abs.-value generator with filter** 0 = connector K0000 1 = connector K0001 etc.	**FB 63**	All connector numbers 1	Ind: None FS=0 Type: L2	P052 = 3 P051 = 40 Offline
U170 (2170) * S00 (B135)	**Signal injection mode for 4th abs.-value generator with filter** 0 Injection of signal with correct sign 1 Injection of absolute value of signal 2 Injection of signal with sign, inverted 3 Injection of absolute value of signal, inverted	**FB 63**	0 to 3 1	Ind: None FS=0 Type: O2	P052 = 3 P051 = 40 Offline

PNU	Description	Value range [Unit] Steps	No. indices Factory setting Type	See Change (Access / Status)
U171 (2171) S00 (B135)	**Filter time for 4th abs.-value generator with filter** **FB 63**	0 to 10000 [ms] 1	Ind: None FS=0 Type: O2	P052 = 3 P051 = 40 Offline

11.57 Processing of connectors

Averager [SW 1.8 and later]				**FB 16, FB 17, FB 18, FB 19**
U172 (2172) * S00 (B139)	**Source for input signal** [SW 1.8 and later] i001: 1st averager (FB 16) i002: 2nd averager (FB 17) i003: 3rd averager (FB 18) i004: 4th averager (FB 19) Settings: 0 = Connector K0000 1 = Connector K0001 etc.	All connector numbers 1	Ind: 4 FS=0 Type: L2	P052 = 3 P051 = 40 Offline
U173 (2173) S00 (B139)	**Number of sampling cycles** [SW 1.8 and later] i001: 1st averager (FB 16) i002: 2nd averager (FB 17) i003: 3rd averager (FB 18) i004: 4th averager (FB 19)	1 to 100 1	Ind: 4 FS=1 Type: O2	P052 = 3 P051 = 40 Online

11.58 Limiters, limit-value monitors

Limiters The input variable selected with index i001 or i004 of the 1st parameter is limited to the limit values selected with indices i002 and i003 or i005 and i006 and applied to the specified connector. Violation of the limit values is signaled by means of two binectors.				
U175 (2175) * S00 (B134) (B135)	**Source for input signal and limits for limiter 1** **FB 65** Output = connector K9167 i001: Input signal i002: Upper limiting value (L+) i003: Lower limiting value (L-) **Source for input signal and limits for limiter 4** **FB 212** [SW2.0 and later] Output = connector K9176 i004: Input signal i005: Upper limiting value (L+) i006: Lower limiting value (L-) Settings: 0 = connector K0000 1 = connector K0001 etc.	All connector numbers 1	Ind: 6 FS= i001: 0 i002: 9165 i003: 9166 i004: 0 i005: 9174 i006: 9175 Type: L2	P052 = 3 P051 = 40 Offline
U176 (2176) S00 (B134) (B135)	**Limit value for limiter** **FB 65, FB212** i001: Applied to connector K9165 (FB 65) i002: Applied to connector K9174 (FB 212) [SW2.0 and later]	-199.99 to 199.99 [%] 0.01%	Ind: 2 FS=100.00 Type: I2	P052 = 3 P051 = 40 Offline

PNU	Description	Value range [Unit] Steps	No. indices Factory setting Type	See Change (Access / Status)
U177 (2177) * S00 (B134) (B135)	**Source for input signal and limits for limiter 2** **FB 66** Output = connector K9170 i001: Input signal i002: Upper limiting value (L+) i003: Lower limiting value (L-) **Source for input signal and limits for limiter 5** **FB 213** [SW2.0 and later] Output = connector K9179 i004: Input signal i005: Upper limiting value (L+) i006: Lower limiting value (L-) Settings: 0 = connector K0000 1 = connector K0001 etc	All connector numbers 1	Ind: 3 FS= i001: 0 i002: 9168 i003: 9169 i004: 0 i005: 9177 i006: 9178 Type: L2	P052 = 3 P051 = 40 Offline
U178 (2178) S00 (B134) (B135)	**Limit value for limiter** **FB 66, FB213** i001: Applied to connector K9168 (FB 66) i002: Applied to connector K9177 (FB 213) [SW2.0 and later]	-199.99 to 199.99 [%] 0.01%	Ind: 2 FS=100.00 Type: I2	P052 = 3 P051 = 40 Offline

PNU	Description	Value range [Unit] Steps	No. indices Factory setting Type	See Change (Access / Status)
U179 (2179) * S00 (B134) (B135)	**Source for input signal and limits for limiter 3** **FB 67** Output = connector K9173 i001: Input signal i002: Upper limiting value (L+) i003: Lower limiting value (L-) **Source for input signal and limits for limiter 6** **FB 214** [SW2.0 and later] Output = connector K9262 i004: Input signal i005: Upper limiting value (L+) i006: Lower limiting value (L-) Settings: 0 = connector K0000 1 = connector K0001 etc.	All connector numbers 1	Ind: 6 FS= i001: 0 i002: 9171 i003: 9172 i004: 0 i005: 9260 i006: 9261 Type: L2	P052 = 3 P051 = 40 Offline
U180 (2180) S00 (B134) (B135)	**Limit value for limiter** **FB 67, FB214** i001: Applied to connector K9171 (FB 67) i002: Applied to connector K9260 (FB 214) [SW2.0 and later]	-199.99 to 199.99 [%] 0.01%	Ind: 2 FS=100.00 Type: I2	P052 = 3 P051 = 40 Offline

Limit-value monitors for double word connectors				
U181 (2181) * S00 (B151)	**Source for input signal (A) and operating threshold (B) for 1st limit-value monitor for double word connectors** **FB 68** **for 2nd limit-value monitor for double word connectors** **FB 69** [SW 1.9 and later] i001: Input signal for 1st limit-value monitor i002: Operating threshold for 1st limit-value monitor i003: Input signal for 2nd limit-value monitor i004: Operating threshold for 2nd limit-value monitor Settings: 0 = connector K0000 1 = connector K0001 etc.	All connector numbers 1	Ind: 4 FS=0 Type: L2	P052 = 3 P051 = 40 Offline
U182 (2182) S00 (B151)	**Hysteresis for 1st limit-value monitor for double word connectors FB 68** **Hysteresis for 2nd limit-value monitor for double word connectors FB69** [SW 1.9 and later] i001: Hysteresis for 1st limit-value monitor i002: Hysteresis for 2nd limit-value monitor The hysteresis relates to the HIGH word of the double word connector	0.00 to 100.00 [%] 0.01%	Ind: 2 FS=0.00 Type: O2	P052 = 3 P051 = 40 Offline

PNU	Description		Value range [Unit] Steps	No. indices Factory setting Type	See Change (Access / Status)
Limit-value monitor with filter					
U185 (2185) * S00 (B136)	**Source for input signal (A) and operating point (B) for 1. Limit-value monitor with filter** i001: Input signal i002: Operating point Settings: 0 = connector K0000 1 = connector K0001 etc.	**FB 70**	All connector numbers 1	Ind: 2 FS= i001: 0 i002: 9181 Type: L2	P052 = 3 P051 = 40 Offline
U186 (2186) S00 (B136)	**Settable operating point for limit-value monitor** Applied to connector K9181	**FB 70**	-200.00 to 199.99 [%] 0.01%	Ind: None FS=0.00 Type: I2	P052 = 3 P051 = 40 Offline
U187 (2187) S00 (B136)	**Filter time for 1st limit-value monitor with filtering**	**FB 70**	0 to 10000 [ms] 1	Ind: None FS=0 Type: O2	P052 = 3 P051 = 40 Offline
U188 (2188) S00 (B136)	**Hysteresis for 1st limit-value monitor with filtering**	**FB 70**	0.00 to 100.00 [%] 0.01%	Ind: None FS=0.00 Type: O2	P052 = 3 P051 = 40 Offline
U189 (2189) * S00 (B136)	**Source for input signal (A) and operating point (B) for 2. Limit-value monitor with filter** i001: Input signal i002: Operating point Settings: 0 = connector K0000 1 = connector K0001 etc.	**FB 71**	All connector numbers 1	Ind: 2 FS= i001: 0 i002: 9183 Type: L2	P052 = 3 P051 = 40 Offline
U190 (2190) S00 (B136)	**Settable operating point for limit-value monitor** Applied to connector K9183	**FB 71**	-200.00 to 199.99 [%] 0.01%	Ind: None FS=0.00 Type: I2	P052 = 3 P051 = 40 Offline
U191 (2191) S00 (B136)	**Filter time for 2nd limit-value monitor with filtering**	**FB 71**	0 to 10000 [ms] 1	Ind: None FS=0 Type: O2	P052 = 3 P051 = 40 Offline
U192 (2192) S00 (B136)	**Hysteresis for 2nd limit-value monitor with filtering**	**FB 71**	0.00 to 100.00 [%] 0.01%	Ind: None FS=0.00 Type: O2	P052 = 3 P051 = 40 Offline
U193 (2193) * S00 (B136)	**Source for input signal (A) and operating point (B) for 3. Limit-value monitor with filter** i001: Input signal i002: Operating point Settings: 0 = connector K0000 1 = connector K0001 etc.	**FB 72**	All connector numbers 1	Ind: 2 FS= i001: 0 i002: 9185 Type: L2	P052 = 3 P051 = 40 Offline
U194 (2194) S00 (B136)	**Settable operating point for limit-value monitor** Applied to connector K9185	**FB 72**	-200.00 to 199.99 [%] 0.01%	Ind: None FS=0.00 Type: I2	P052 = 3 P051 = 40 Offline
U195 (2195) S00 (B136)	**Filter time for 3rd limit-value monitor with filtering**	**FB 72**	0 to 10000 [ms] 1	Ind: None FS=0 Type: O2	P052 = 3 P051 = 40 Offline
U196 (2196) S00 (B136)	**Hysteresis for 3rd limit-value monitor with filtering**	**FB 72**	0.00 to 100.00 [%] 0.01%	Ind: None FS=0.00 Type: O2	P052 = 3 P051 = 40 Offline

PNU	Description		Value range [Unit] Steps	No. indices Factory setting Type	See Change (Access / Status)
Limit-value monitor without filter					
U197 (2197) * S00 (B137)	**Source for input signal (A) and operating point (B) for 1. Limit-value monitor without filter** i001: Input signal i002: Operating point Settings: 0 = connector K0000 1 = connector K0001 etc.	**FB 73**	All connector numbers 1	Ind: 2 FS= i001: 167 i002: 9186 Type: L2	P052 = 3 P051 = 40 Offline
U198 (2198) S00 (B137)	**Settable operating point for limit-value monitor** Applied to connector K9186	**FB 73**	-200.00 to 199.99 [%] 0.01%	Ind: None FS=75.00 Type: I2	P052 = 3 P051 = 40 Offline
U199 (2199) S00 (B137)	**Hysteresis for 1st limit-value monitor without filtering**	**FB 73**	0.00 to 100.00 [%] 0.01%	Ind: None FS=0.00 Type: O2	P052 = 3 P051 = 40 Offline
U200 (2200) * S00 (B137)	**Source for input signal (A) and operating point (B) for 2. Limit-value monitor without filter** i001: Input signal i002: Operating point Settings: 0 = connector K0000 1 = connector K0001 etc.	**FB 74**	All connector numbers 1	Ind: 2 FS= i001: 9187 i002: 167 Type: L2	P052 = 3 P051 = 40 Offline
U201 (2201) S00 (B137)	**Settable operating point for limit-value monitor** Applied to connector K9187	**FB 74**	-200.00 to 199.99 [%] 0.01%	Ind: None FS=-75.00 Type: I2	P052 = 3 P051 = 40 Offline
U202 (2202) S00 (B137)	**Hysteresis for 2nd limit-value monitor without filtering**	**FB 74**	0.00 to 100.00 [%] 0.01%	Ind: None FS=0.00 Type: O2	P052 = 3 P051 = 40 Offline
U203 (2203) * S00 (B137)	**Source for input signal (A) and operating point (B) for 3. Limit-value monitor without filter** i001: Input signal i002: Operating point Settings: 0 = connector K0000 1 = connector K0001 etc.	**FB 75**	All connector numbers 1	Ind: 2 FS= i001: 401 i002: 166 Type: L2	P052 = 3 P051 = 40 Offline
U204 (2204) S00 (B137)	**Settable operating point for limit-value monitor** Applied to connector K9188	**FB 75**	-200.00 to 199.99 [%] 0.01%	Ind: None FS=0.00 Type: I2	P052 = 3 P051 = 40 Offline
U205 (2205) S00 (B137)	**Hysteresis for 3rd limit-value monitor without filtering**	**FB 75**	0.00 to 100.00 [%] 0.01%	Ind: None FS=0.00 Type: O2	P052 = 3 P051 = 40 Offline
U206 (2206) * S00 (B137)	**Source for input signal (A) and operating point (B) for 4. Limit-value monitor without filter** i001: Input signal i002: Operating point Settings: 0 = connector K0000 1 = connector K0001 etc.	**FB 76**	All connector numbers 1	Ind: 2 FS= i001: 0 i002: 9189 Type: L2	P052 = 3 P051 = 40 Offline

PNU	Description		Value range [Unit] Steps	No. indices Factory setting Type	See Change (Access / Status)
U207 (2207) S00 (B137)	**Settable operating point for limit-value monitor** Applied to connector K9189	**FB 76**	-200.00 to 199.99 [%] 0.01%	Ind: None FS=0.00 Type: I2	P052 = 3 P051 = 40 Offline
U208 (2208) S00 (B137)	**Hysteresis for 4th limit-value monitor without filtering**	**FB 76**	0.00 to 100.00 [%] 0.01%	Ind: None FS=0.00 Type: O2	P052 = 3 P051 = 40 Offline
U210 (2210) * S00 (B138)	**Source for input signal (A) and operating point (B) for 5. Limit-value monitor without filter** i001: Input signal i002: Operating point Settings: 0 = connector K0000 1 = connector K0001 etc.	**FB 77**	All connector numbers 1	Ind: 2 FS= i001: 0 i002: 9190 Type: L2	P052 = 3 P051 = 40 Offline
U211 (2211) S00 (B138)	**Settable operating point for limit-value monitor** Applied to connector K9190	**FB 77**	-200.00 to 199.99 [%] 0.01%	Ind: None FS=0.00 Type: I2	P052 = 3 P051 = 40 Offline
U212 (2212) S00 (B138)	**Hysteresis for 5th limit-value monitor without filtering**	**FB 77**	0.00 to 100.00 [%] 0.01%	Ind: None FS=0.00 Type: O2	P052 = 3 P051 = 40 Offline
U213 (2213) * S00 (B138)	**Source for input signal (A) and operating point (B) for 6. Limit-value monitor without filter** i001: Input signal i002: Operating point Settings: 0 = connector K0000 1 = connector K0001 etc.	**FB 78**	All connector numbers 1	Ind: 2 FS= i001: 0 i002: 9191 Type: L2	P052 = 3 P051 = 40 Offline
U214 (2214) S00 (B138)	**Settable operating point for limit-value monitor** Applied to connector K9191	**FB 78**	-200.00 to 199.99 [%] 0.01%	Ind: None FS=0.00 Type: I2	P052 = 3 P051 = 40 Offline
U215 (2215) S00 (B138)	**Hysteresis for 6th limit-value monitor without filtering**	**FB 78**	0.00 to 100.00 [%] 0.01%	Ind: None FS=0.00 Type: O2	P052 = 3 P051 = 40 Offline
U216 (2216) * S00 (B138)	**Source for input signal (A) and operating point (B) for 7. Limit-value monitor without filter** i001: Input signal i002: Operating point Settings: 0 = connector K0000 1 = connector K0001 etc.	**FB 79**	All connector numbers 1	Ind: 2 FS= i001: 0 i002: 9192 Type: L2	P052 = 3 P051 = 40 Offline
U217 (2217) S00 (B138)	**Settable operating point for limit-value monitor** Applied to connector K9192	**FB 79**	-200.00 to 199.99 [%] 0.01%	Ind: None FS=0.00 Type: I2	P052 = 3 P051 = 40 Offline
U218 (2218) S00 (B138)	**Hysteresis for 7th limit-value monitor without filtering**	**FB 79**	0.00 to 100.00 [%] 0.01%	Ind: None FS=0.00 Type: O2	P052 = 3 P051 = 40 Offline

PNU	Description	Value range [Unit] Steps	No. indices Factory setting Type	See Change (Access / Status)

11.59 Processing of connectors

Maximum selection				**FB 80, FB 174, FB 175, FB 176**
The largest of the input values selected by 3 indices each of the parameter (x1, x2, x3) is applied to the output.				
U220 (2220) * S00 (B140)	**Source for maximum selection** 0 = Connector K0000 1 = Connector K0001 etc. i001: x1 Maximum selection 1 (FB 80, Output = K9193) i002: x2 Maximum selection 1 i003: x3 Maximum selection 1 SW 1.8 and later: i004: x1 Maximum selection 2 (FB 174, Output = K9460) i005: x2 Maximum selection 2 i006: x3 Maximum selection 2 i007: x1 Maximum selection 3 (FB 175, Output = K9461) i008: x2 Maximum selection 3 i009: x3 Maximum selection 3 i010: x1 Maximum selection 4 (FB 176, Output = K9462) i011: x2 Maximum selection 4 i012: x3 Maximum selection 4	All connector numbers 1	Ind: 12 FS=0 Type: L2	P052 = 3 P051 = 40 Offline

Minimum selection				**FB 81, FB 177, FB 178, FB 179**
The smallest of the input values selected by 3 indices each of the parameter (x1, x2, x3) is applied to the output.				
U221 (2221) * S00 (B140)	**Source for minimum selection** 0 = Connector K0000 1 = Connector K0001 etc. i001: x1 Minimum selection 1 (FB 81, Output = K9194) i002: x2 Minimum selection 1 i003: x3 Minimum selection 1 SW 1.8 and later: i004: x1 Minimum selection 2 (FB 177, Output = K9463) i005: x2 Minimum selection 2 i006: x3 Minimum selection 2 i007: x1 Minimum selection 3 (FB 178, Output = K9464) i008: x2 Minimum selection 3 i009: x3 Minimum selection 3 i010: x1 Minimum selection 4 (FB 179, Output = K9465) i011: x2 Minimum selection 4 i012: x3 Minimum selection 4	All connector numbers 1	Ind: 12 FS=0 Type: L2	P052 = 3 P051 = 40 Offline

Tracking/storage elements

The tracking/storage elements are storage elements for the parameterized input quantity. The outputs are linked to connectors.

Transfer of the input quantity is controlled via the RESET, TRACK and STORE functions:

RESET: When the controlling binector reaches log. "1", the output is set to 0.00% (y=0)

TRACK: When the controlling binector reaches log. "1", the output is set to the input value and then tracks it continuously (y=x). If the TRACK signal switches from "1" to "0", the last value applied to the y output is "frozen"

STORE: With a "0" to "1" transition of the controlling binector signal, the output is permanently set to the current input value (y=x). This value then remains stored

Priority1. RESET, 2. TRACK, 3. STORE

Tracking/storage element 1

U222 (2222) * S00 (B145)	**Source for input quantity (x)** **FB 82** 0 = connector K0000 1 = connector K0001 etc.	All connector numbers 1	Ind: None FS=0 Type: L2	P052 = 3 P051 = 40 Offline

PNU	Description	Value range [Unit] Steps	No. indices Factory setting Type	See Change (Access / Status)
U223 (2223) * S00 (B145)	**Source for control signals RESET, TRACK and STORE** **FB 82** i001: TRACK i002: STORE i003: RESET Settings: 0 = binector B0000 1 = binector B0001 etc.	All binector numbers 1	Ind: 3 FS=0 Type: L2	P052 = 3 P051 = 40 Offline
U224 (2224) * S00 (B145)	**Control word for Power On Mode** **FB 82** 0 Volatile storage: Zero appears at output when voltage recovers 1 Non-volatile storage: When the voltage is disconnected or fails, the current output value is stored and then output when the voltage recovers/is reconnected	0 to 1 1	Ind: None FS=0 Type: O2	P052 = 3 P051 = 40 Offline

Tracking/storage element 2				
U225 (2225) * S00 (B145)	**Source for input quantity (x)** **FB 83** 0 = connector K0000 1 = connector K0001 etc.	All connector numbers 1	Ind: None FS=0 Type: L2	P052 = 3 P051 = 40 Offline
U226 (2226) * S00 (B145)	**Source for control signals RESET, TRACK and STORE** **FB 83** i001: TRACK i002: STORE i003: RESET Settings: 0 = binector B0000 1 = binector B0001 etc.	All binector numbers 1	Ind: 3 FS=0 Type: L2	P052 = 3 P051 = 40 Offline
U227 (2227) * S00 (B145)	**Control word for Power On Mode** **FB 83** 0 Volatile storage: Zero appears at output when voltage recovers 1 Non-volatile storage: When the voltage is disconnected or fails, the current output value is stored and then output when the voltage recovers/is reconnected	0 to 1 1	Ind: None FS=0 Type: O2	P052 = 3 P051 = 40 Offline

Connector memories

The connector memories are memory elements for the input quantities selected via the parameters. The outputs are linked to connectors.

While the SET input is in the log. "1" state, output quantity y tracks input quantity x continuously. If the SET input changes state from log. "1" to log. "0", the current value of x is stored and output continuously at y.

Output (y) = 0 is set on POWER ON.

Connector memory 1				
U228 (2228) * S00 (B145)	**Source for input quantity (x)** **FB 84** 0 = connector K0000 1 = connector K0001 etc.	All connector numbers 1	Ind: None FS=0 Type: L2	P052 = 3 P051 = 40 Offline
U229 (2229) * S00 (B145)	**Source for control signal SET** **FB 84** 0 = binector B0000 1 = binector B0001 etc.	All binector numbers 1	Ind: None FS=0 Type: L2	P052 = 3 P051 = 40 Offline

Connector memory 2				
U230 (2230) * S00 (B145)	**Source for input quantity (x)** **FB 85** 0 = connector K0000 1 = connector K0001 etc.	All connector numbers 1	Ind: None FS=0 Type: L2	P052 = 3 P051 = 40 Offline

PNU	Description		Value range [Unit] Steps	No. indices Factory setting Type	See Change (Access / Status)
U231 (2231) * S00 (B145)	**Source for control signal SET** 0 = binector B0000 1 = binector B0001 etc.	**FB 85**	All binector numbers 1	Ind: None FS=0 Type: L2	P052 = 3 P051 = 40 Offline

Connector changeover switches

Depending on the state of the control signal, one of the two input quantities is applied to the output (connector):
Control signal = 0: The input quantity selected in index i001 is applied to the output
Control signal = 1: The input quantity selected in index i002 is applied to the output

Connector changeover switch 1 (output = K9210)

U240 (2240) * S00 (B150)	**Source for input quantities** 0 = connector K0000 1 = connector K0001 etc.	**FB 90**	All connector numbers 1	Ind: 2 FS= i001: 9113 i002: 3001 Type: L2	P052 = 3 P051 = 40 Offline
U241 (2241) * S00 (B150)	**Source for control signal** 0 = binector B0000 1 = binector B0001 etc.	**FB 90**	All binector numbers 1	Ind: None FS=3110 Type: L2	P052 = 3 P051 = 40 Offline

Connector changeover switch 2 (output = K9211)

U242 (2242) * S00 (B150)	**Source for input quantities** 0 = connector K0000 1 = connector K0001 etc.	**FB 91**	All connector numbers 1	Ind: 2 FS= i001: 9114 i002: 3003 Type: L2	P052 = 3 P051 = 40 Offline
U243 (2243) * S00 (B150)	**Source for control signal** 0 = binector B0000 1 = binector B0001 etc.	**FB 91**	All binector numbers 1	Ind: None FS=3110 Type: L2	P052 = 3 P051 = 40 Offline

Connector changeover switch 3 (output = K9212)

U244 (2244) * S00 (B150)	**Source for input quantities** 0 = connector K0000 1 = connector K0001 etc.	**FB 92**	All connector numbers 1	Ind: 2 FS= i001: 11 i002: 3002 Type: L2	P052 = 3 P051 = 40 Offline
U245 (2245) * S00 (B150)	**Source for control signal** 0 = binector B0000 1 = binector B0001 etc.	**FB 92**	All binector numbers 1	Ind: None FS=3110 Type: L2	P052 = 3 P051 = 40 Offline

Connector changeover switch 4 (output = K9213)

U246 (2246) * S00 (B150)	**Source for input quantities** 0 = connector K0000 1 = connector K0001 etc.	**FB 93**	All connector numbers 1	Ind: 2 FS= i001: 1 i002: 3 Type: L2	P052 = 3 P051 = 40 Offline
U247 (2247) * S00 (B150)	**Source for control signal** 0 = binector B0000 1 = binector B0001 etc.	**FB 93**	All binector numbers 1	Ind: None FS=9064 Type: L2	P052 = 3 P051 = 40 Offline

Connector changeover switch 5 (output = K9214)

U248 (2248) * S00 (B150)	**Source for input quantities** 0 = connector K0000 1 = connector K0001 etc.	**FB 94**	All connector numbers 1	Ind: 2 FS= i001: 9150 i002: 9213 Type: L2	P052 = 3 P051 = 40 Offline

PNU	Description	Value range [Unit] Steps	No. indices Factory setting Type	See Change (Access / Status)
U249 (2249) * S00 (B150)	**Source for control signal** **FB 94** 0 = binector B0000 1 = binector B0001 etc.	All binector numbers 1	Ind: None FS=9083 Type: L2	P052 = 3 P051 = 40 Offline
Connector changeover switches 6 and 11				
U250 (2250) * S00 (B150)	**Source for input quantities** **FB 95 and FB 196** Output 6 = Connector K9215 i001: 1st input signal i002: 2nd input signal Output 11 = Connector K9265 [SW2.0 and later] i003: 1st input signal i004: 2nd input signal Settings: 0 = Connector K0000 1 = Connector K0001 etc.	All connector numbers 1	Ind: 4 FS= i001: 9214 i002: 510 i003: 0 i004: 0 Type: L2	P052 = 3 P051 = 40 Offline
U251 (2251) * S00 (B150)	**Source for control signal** **FB 95 and FB 196** i001: Switchover for output 6 i002: Switchover for output 11 [SW2.0 and later] Settings: 0 = Binector B0000 1 = Binector B0001 etc.	All binector numbers 1	Ind: 2 FS=0 Type: L2	P052 = 3 P051 = 40 Offline
Connector changeover switches 7 and 12				
U252 (2252) * S00 (B150)	**Source for input quantities** **FB 96 and FB 197** Output 7 = Connector K9216 i001: 1st input signal i002: 2nd input signal Output 12 = Connector K9266 [SW2.0 and later] i003: 1st input signal i004: 2nd input signal Settings: 0 = Connector K0000 1 = Connector K0001 etc.	All connector numbers 1	Ind: 4 FS=0 Type: L2	P052 = 3 P051 = 40 Offline
U253 (2253) * S00 (B150)	**Source for control signal** **FB 96 and FB 197** i001: Switchover for output 7 i002: Switchover for output 12 [SW2.0 and later] Settings: 0 = Binector B0000 1 = Binector B0001 etc.	All binector numbers 1	Ind: 2 FS=0 Type: L2	P052 = 3 P051 = 40 Offline
Connector changeover switches 8 and 13				
U254 (2254) * S00 (B150)	**Source for input quantities** **FB 97 and FB 198** Output 8 = Connector K9217 i001: 1st input signal i002: 2nd input signal Output 13 = Connector K9267 [SW2.0 and later] i003: 1st input signal i004: 2nd input signal Settings: 0 = Connector K0000 1 = Connector K0001 etc.	All connector numbers 1	Ind: 4 FS=0 Type: L2	P052 = 3 P051 = 40 Offline

PNU	Description		Value range [Unit] Steps	No. indices Factory setting Type	See Change (Access / Status)
U255 (2255) * S00 (B150)	**Source for control signal** i001: Switchover for output 8 i002: Switchover for output 13 Settings: 0 = Binector B0000 1 = Binector B0001 etc..	**FB 97 and FB 198** [SW2.0 and later]	All binector numbers 1	Ind: 2 FS=0 Type: L2	P052 = 3 P051 = 40 Offline

Connector changeover switches 9 and 14					
U256 (2256) * S00 (B150)	**Source for input quantities** Output 9 = Connector K9218 i001: 1st input signal i002: 2nd input signal Output 14 = Connector K9268 i003: 1st input signal i004: 2nd input signal Settings: 0 = Connector K0000 1 = Connector K0001 etc.	**FB 98 and FB 199** [SW2.0 and later]	All connector numbers 1	Ind: 4 FS=0 Type: L2	P052 = 3 P051 = 40 Offline
U257 (2257) * S00 (B150)	**Source for control signal** i001: Switchover for output 9 i002: Switchover for output 14 Settings: 0 = Binector B0000 1 = Binector B0001 etc.	**FB 98 and FB 199** [SW2.0 and later]	All binector numbers 1	Ind: 2 FS=0 Type: L2	P052 = 3 P051 = 40 Offline

Connector changeover switches 10 and 15					
U258 (2258) * S00 (B150)	**Source for input quantities** Output 10 = Connector K9219 i001: 1st input signal i002: 2nd input signal Output 15 = Connector K9269 i003: 1st input signal i004: 2nd input signal Settings: 0 = Connector K0000 1 = Connector K0001 etc.	**FB 99 and FB 229** [SW2.0 and later]	All connector numbers 1	Ind: 4 FS=0 Type: L2	P052 = 3 P051 = 40 Offline
U259 (2259) * S00 (B150)	**Source for control signal** i001: Switchover for output 10 i002: Switchover for output 15 Settings: 0 = Binector B0000 1 = Binector B0001 etc.	**FB 99 and FB 229** [SW2.0 and later]	All binector numbers 1	Ind: 2 FS=0 Type: L2	P052 = 3 P051 = 40 Offline

11.60 Integrators, DT1 elements, characteristics, dead zones, setpoint branching

Integrator 1 (output = K9220)					
U260 (2260) * S00 (B155)	**Source for input quantity** 0 = connector K0000 1 = connector K0001 etc.	**FB 100**	All connector numbers 1	Ind: None FS=0 Type: L2	P052 = 3 P051 = 40 Offline
U261 (2261) S00 (B155)	**Integral-action time**	**FB 100**	10 to 65000 [ms] 1	Ind: None FS=10 Type: O2	P052 = 3 P051 = 40 Online

PNU	Description	Value range [Unit] Steps	No. indices Factory setting Type	See Change (Access / Status)
U262 (2262) * S00 (B155)	**Source for control signals** **FB 100** i001 Source for "Stop integrator" signal (integrator is stopped when binector reaches log. "1" state) i002 Source for "Set integrator" signal (when binector reaches log. "1" state, the integrator is set to the value entered in parameter U263) Settings: 0 = binector B0000 1 = binector B0001 etc.	All binector numbers 1	Ind: 2 FS=0 Type: L2	P052 = 3 P051 = 40 Offline
U263 (2263) * S00 (B155)	**Source for setting value** **FB 100** 0 = connector K0000 1 = connector K0001 etc.	All connector numbers 1	Ind: None FS=0 Type: L2	P052 = 3 P051 = 40 Offline
Integrator 2 (output = K9221)				
U264 (2264) * S00 (B155)	**Source for input quantity** **FB 101** 0 = connector K0000 1 = connector K0001 etc.	All connector numbers 1	Ind: None FS=0 Type: L2	P052 = 3 P051 = 40 Offline
U265 (2265) S00 (B155)	**Integral-action time** **FB 101**	10 to 65000 [ms] 1	Ind: None FS=10 Type: O2	P052 = 3 P051 = 40 Online
U266 (2266) * S00 (B155)	**Source for control signals** **FB 101** i001 Source for "Stop integrator" signal (integrator is stopped when binector reaches log. "1" state) i002 Source for "Set integrator" signal (when binector reaches log. "1" state, the integrator is set to the value entered in parameter U267) Settings: 0 = binector B0000 1 = binector B0001 etc.	All binector numbers 1	Ind: 2 FS=0 Type: L2	P052 = 3 P051 = 40 Offline
U267 (2267) * S00 (B155)	**Source for setting value** **FB 101** 0 = connector K0000 1 = connector K0001 etc.	All connector numbers 1	Ind: None FS=0 Type: L2	P052 = 3 P051 = 40 Offline
Integrator 3 (output = K9222)				
U268 (2268) * S00 (B155)	**Source for input quantity** **FB 102** 0 = connector K0000 1 = connector K0001 etc.	All connector numbers 1	Ind: None FS=0 Type: L2	P052 = 3 P051 = 40 Offline
U269 (2269) S00 (B155)	**Integral-action time** **FB 102**	10 to 65000 [ms] 1	Ind: None FS=10 Type: O2	P052 = 3 P051 = 40 Online
U270 (2270) * S00 (B155)	**Source for control signals** **FB 102** i001 Source for "Stop integrator" signal (integrator is stopped when binector reaches log. "1" state) i002 Source for "Set integrator" signal (when binector reaches log. "1" state, the integrator is set to the value entered in parameter U271) Settings: 0 = binector B0000 1 = binector B0001 etc.	All binector numbers 1	Ind: 2 FS=0 Type: L2	P052 = 3 P051 = 40 Offline

PNU	Description		Value range [Unit] Steps	No. indices Factory setting Type	See Change (Access / Status)
U271 (2271) * S00 (B155)	**Source for setting value** 0 = connector K0000 1 = connector K0001 etc.	**FB 102**	All connector numbers 1	Ind: None FS=0 Type: L2	P052 = 3 P051 = 40 Offline

DT1 element 1 (output = K9223, inverted: K9224)					
U272 (2272) * S00 (B155)	**Source for input quantity** 0 = connector K0000 1 = connector K0001 etc.	**FB 103**	All connector numbers 1	Ind: None FS=0 Type: L2	P052 = 3 P051 = 40 Offline
U273 (2273) S00 (B155)	**Derivative-action time**	**FB 103**	0 to 1000 [ms] 1	Ind: None FS=0 Type: O2	P052 = 3 P051 = 40 Online
U274 (2274) S00 (B155)	**Filter time**	**FB 103**	0 to 1000 [ms] 1	Ind: None FS=0 Type: O2	P052 = 3 P051 = 40 Online

DT1 element 2 (output = K9225, inverted: K9226)					
U275 (2275) * S00 (B155)	**Source for input quantity** 0 = connector K0000 1 = connector K0001 etc.	**FB 104**	All connector numbers 1	Ind: None FS=0 Type: L2	P052 = 3 P051 = 40 Offline
U276 (2276) S00 (B155)	**Derivative-action time**	**FB 104**	0 to 1000 [ms] 1	Ind: None FS=0 Type: O2	P052 = 3 P051 = 40 Online
U277 (2277) S00 (B155)	**Filter time**	**FB 104**	0 to 1000 [ms] 1	Ind: None FS=0 Type: O2	P052 = 3 P051 = 40 Online

DT1 element 3 (output = K9227, inverted: K9228)					
U278 (2278) * S00 (B155)	**Source for input quantity** 0 = connector K0000 1 = connector K0001 etc.	**FB 105**	All connector numbers 1	Ind: None FS=0 Type: L2	P052 = 3 P051 = 40 Offline
U279 (2279) S00 (B155)	**Derivative-action time**	**FB 105**	0 to 1000 [ms] 1	Ind: None FS=0 Type: O2	P052 = 3 P051 = 40 Online
U280 (2280) S00 (B155)	**Filter time**	**FB 105**	0 to 1000 [ms] 1	Ind: None FS=0 Type: O2	P052 = 3 P051 = 40 Online

PNU	Description	Value range [Unit] Steps	No. indices Factory setting Type	See Change (Access / Status)
Characteristic blocks				
	The curve of the characteristics can be defined by 10 points each: Index i001 to i010 of the parameters for the x values (U282, U285, U288): x values for FB 106, FB 107, FB 108 Index i001 to i010 of the parameters for the y values (U283, U286, U289): associated y values SW1.8 and later: Index i011 to i020 of the parameters for the x values (U282, U285, U288): x values for FB 280, FB 282, FB 284 Index i011 to i020 of the parameters for the y values (U283, U286, U289): associated y values Index i021 to i030 of the parameters for the x values (U282, U285, U288): x values for FB 281, FB 283, FB 285 Index i021 to i030 of the parameters for the y values (U283, U286, U289): associated y values for x = -200.00% up to x value acc. to index i001 (or i011 or i021) of the parameter for the x values gilt: y = value acc. to index i001 (or i011 or i021) of the parameter for the y values for x = x value acc. to index i010 (or i020 or i030) of the parameter for the x values to x = 200.00% gilt: y = value acc. to index i010 (or i020 or i030) of the parameter for the y values The distance between two adjacent x or y values must not be more than 199.99% otherwise deviations from the required shape of the characteristic can arise.			
Characteristic block 1 (output = K9229) **Characteristic block 4** (output = K9410) [SW1.8 and later] **Characteristic block 5** (output = K9411) [SW1.8 and later]				**FB 106** **FB 280** **FB 281**
U281 (2281) * S00 (B160)	**Source for input quantity** 0 = Connector K0000 1 = Connector K0001 etc. Up to SW 1.7: Selected connector = input quantity for FB106 SW 1.8 and later: i001 Input quantity for FB106 i002 Input quantity for FB280 i003 Input quantity for FB281	All connector numbers 1	Ind: 3 FS= i001: 9212 i002: 0 i003: 0 Type: L2	P052 = 3 P051 = 40 Offline
U282 (2282) S00 (B160)	**x values** i001 1st characteristic point for FB106 i002 2nd characteristic point for FB106 ... i010 10th characteristic point for FB106 SW 1.8 and later: i011 1st characteristic point for FB280 i012 2nd characteristic point for FB280 ... i020 10th characteristic point for FB280 i021 1st characteristic point for FB281 i022 2nd characteristic point for FB281 ... i030 10th characteristic point for FB281	-200.00 to 199.99 [%] 0.01	Ind: 30 FS= i001:-100.00 i002: -70.00 i003: -60.00 i004: -40.00 i005: -20.00 i006: 20.00 i007: 40.00 i008: 60.00 i009: 70.00 i010: 100.00 i011-i030: 0.00 Type: I2	P052 = 3 P051 = 40 Online
U283 (2283) S00 (B160)	**y values** i001 1st characteristic point for FB106 i002 2nd characteristic point for FB106 ... i010 10th characteristic point for FB106 SW 1.8 and later: i011 1st characteristic point for FB280 i012 2nd characteristic point for FB280 ... i020 10th characteristic point for FB280 i021 1st characteristic point for FB281 i022 2nd characteristic point for FB281 ... i030 10th characteristic point for FB281	-200.00 to 199.99 [%] 0.01	Ind: 30 FS= i001:-100.00 i002: -50.00 i003: -35.00 i004: -20.00 i005: -6.00 i006: 6.00 i007: 20.00 i008: 35.00 i009: 50.00 i010: 100.00 i011-i030: 0.00 Type: I2	P052 = 3 P051 = 40 Online

PNU	Description	Value range [Unit] Steps	No. indices Factory setting Type	See Change (Access / Status)
Characteristic block 2 (output = K9230) **FB 107** **Characteristic block 6** (output = K9412) [SW1.8 and later] **FB 282** **Characteristic block 7** (output = K9413) [SW1.8 and later] **FB 283**				
U284 (2284) * S00 (B160)	**Source for input quantity** 0 = Connector K0000 1 = Connector K0001 etc. up to SW 1.7: Selected connector = input quantity for FB107 SW 1.8 and later: i001 input quantity for FB107 i002 input quantity for FB282 i003 input quantity for FB283.	All connector numbers 1	Ind: 3 FS=0 Type: L2	P052 = 3 P051 = 40 Offline
U285 (2285) S00 (B160)	**x values** i001 1st characteristic point for FB107 i002 2nd characteristic point for FB107 ... i010 10th characteristic point for FB107 SW 1.8 and later: i011 1st characteristic point for FB282 i012 2nd characteristic point for FB282 ... i020 10th characteristic point for FB282 i021 1st characteristic point for FB283 i022 2nd characteristic point for FB283 ... i030 10th characteristic point for FB283	-200.00 to 199.99 [%] 0.01	Ind: 30 FS=0.00 Type: I2	P052 = 3 P051 = 40 Online
U286 (2286) S00 (B160)	**y values** i001 1st characteristic point for FB107 i002 2nd characteristic point for FB107 ... i010 10th characteristic point for FB107 SW 1.8 and later: i011 1st characteristic point for FB282 i012 2nd characteristic point for FB282 ... i020 10th characteristic point for FB282 i021 1st characteristic point for FB283 i022 2nd characteristic point for FB283 ... i030 10th characteristic point for FB283	-200.00 to 199.99 [%] 0.01	Ind: 30 FS=0.00 Type: I2	P052 = 3 P051 = 40 Online

Characteristic block 3 (Output = K9231) **FB 108** **Characteristic block 8** (Output = K9414) [SW1.8 and later] **FB 284** **Characteristic block 9** (Output = K9415) [SW1.8 and later] **FB 285**				
U287 (2287) * S00 (B160)	**Source for input quantity** 0 = Connector K0000 1 = Connector K0001 etc. up to SW 1.7: Selected connector = input quantity for FB108 SW 1.8 and later: i001 Input quantity for FB108 i002 Input quantity for FB284 i003 Input quantity for FB285	All connector numbers 1	Ind: 3 FS=0 Type: L2	P052 = 3 P051 = 40 Offline

PNU	Description	Value range [Unit] Steps	No. indices Factory setting Type	See Change (Access / Status)
U288 (2288) S00 (B160)	**x values** i001 1st characteristic point for FB108 i002 2nd characteristic point for FB108 ... i010 10th characteristic point for FB108 SW 1.8 and later: i011 1st characteristic point for FB284 i012 2nd characteristic point for FB284 ... i020 10th characteristic point for FB284 i021 1st characteristic point for FB285 i022 2nd characteristic point for FB285 ... i030 10th characteristic point for FB285	-200.00 to 199.99 [%] 0.01	Ind: 30 FS=0.00 Type: I2	P052 = 3 P051 = 40 Online
U289 (2289) S00 (B160)	**y values** i001 1st characteristic point for FB108 i002 2nd characteristic point for FB108 ... i010 10th characteristic point for FB108 SW 1.8 and later: i011 1st characteristic point for FB284 i012 2nd characteristic point for FB284 ... i020 10th characteristic point for FB284 i021 1st characteristic point for FB285 i022 2nd characteristic point for FB285 ... i030 10th characteristic point for FB285	-200.00 to 199.99 [%] 0.01	Ind: 30 FS=0.00 Type: I2	P052 = 3 P051 = 40 Online

Dead zones

The component of the input quantity (x) whose absolute value exceeds the threshold for the dead zone is applied to the output (y).

Dead zone 1 (output = K9232)

U290 (2290) * S00 (B161)	**Source for input quantity** **FB 109** 0 = connector K0000 1 = connector K0001 etc.		All connector numbers 1	Ind: None FS=0 Type: L2	P052 = 3 P051 = 40 Offline
U291 (2291) S00 (B161)	**Dead zone** **FB 109**		0.00 to 100.00 [%] 0.01	Ind: None FS=0.00 Type: O2	P052 = 3 P051 = 40 Online

Dead zone 2 (output = K9233)

U292 (2292) * S00 (B161)	**Source for input quantity** **FB 110** 0 = connector K0000 1 = connector K0001 etc.		All connector numbers 1	Ind: None FS=0 Type: L2	P052 = 3 P051 = 40 Offline
U293 (2293) S00 (B161)	**Dead zone** **FB 110**		0.00 to 100.00 [%] 0.01	Ind: None FS=0.00 Type: O2	P052 = 3 P051 = 40 Online

Dead zone 3 (output = K9234)

U294 (2294) * S00 (B161)	**Source for input quantity** **FB 111** 0 = connector K0000 1 = connector K0001 etc.		All connector numbers 1	Ind: None FS=0 Type: L2	P052 = 3 P051 = 40 Offline
U295 (2295) S00 (B161)	**Dead zone** **FB 111**		0.00 to 100.00 [%] 0.01	Ind: None FS=0.00 Type: O2	P052 = 3 P051 = 40 Online

PNU	Description	Value range [Unit] Steps	No. indices Factory setting Type	See Change (Access / Status)
Setpoint branching (output = K9235) The input quantity is weighted with 2 parameters: Parameter U297 determines the output value with an input = 0% Parameter U298 determines the output value with an input = +100% -U297 and -U298 apply in the case of negative input values. The hysteresis set in parameter U299 is applied for transitions from negative to positive input values and vice versa				
U296 (2296) * S00 (B161)	**Source for input quantity** **FB 112** 0 = connector K0000 1 = connector K0001 etc.	All connector numbers 1	Ind: None FS=0 Type: L2	P052 = 3 P051 = 40 Offline
U297 (2297) S00 (B161)	**Minimum speed** **FB 112**	0.00 to 199.99 [%] 0.01	Ind: None FS=0.00 Type: O2	P052 = 3 P051 = 40 Online
U298 (2298) S00 (B161)	**Maximum speed** **FB 112**	0.00 to 199.99 [%] 0.01	Ind: None FS=100.00 Type: O2	P052 = 3 P051 = 40 Online
U299 (2299) S00 (B161)	**Hysteresis** **FB 112**	0.00 to 100.00 [%] 0.01	Ind: None FS=0.00 Type: O2	P052 = 3 P051 = 40 Online

11.61 Simple ramp-function generator

Please note: The output (y) = 0 is set in response to "Set simple ramp-function generator to zero" and POWER ON The output (y) is frozen at the current value in response to "Stop simple ramp-function generator" The ramp-up and ramp-down times are set to zero in response to "Bypass simple ramp-function generator" Ramp-up integrator: The simple ramp-function generator contains a flip-flop whose output is set to log. "0" (ramp generator initial run) after POWER ON or when the ramp-function generator has been enabled. When the ramp-function generator output reaches a value corresponding to the input quantity (y=x) for the first time, the flip-flop output switches to log. "1" and remains in this state until the next enabling command. This output is linked to binector B9191. By parameterizing U301, index i001=919, it is possible to apply this binector to the "Bypass simple ramp-function generator" function and thus to implement a ramp-up integrator function.				
U300 (2300) * S00 (B165)	**Source for input quantity** **FB 113** 0 = connector K0000 1 = connector K0001 etc.	All connector numbers 1	Ind: None FS=0 Type: L2	P052 = 3 P051 = 40 Offline
U301 (2301) * S00 (B165)	**Source for control signals** **FB 113** i001 Source for "Bypass simple ramp-function generator" signal i002 Source for "Stop simple ramp-function generator" signal i003 Source for "Reset / enable simple ramp-function generator" signal (0 = reset to zero, 1 = enable) Settings: 0 = binector B0000 1 = binector B0001 etc.	All binector numbers 1	Ind: 3 FS= i001: 0 i002: 0 i003: 1 Type: L2	P052 = 3 P051 = 40 Offline
U302 (2302) S00 (B165)	**Ramp-up time** **FB 113**	0.00 to 300.00 [s] 0.01	Ind: None FS=0.00 Type: O2	P052 = 3 P051 = 40 Online
U303 (2303) S00 (B165)	**Ramp-down time** **FB 113**	0.00 to 300.00 [s] 0.01	Ind: None FS=0.00 Type: O2	P052 = 3 P051 = 40 Online

PNU	Description	Value range [Unit] Steps	No. indices Factory setting Type	See Change (Access / Status)

11.62 Multiplexer

FB86 = 1st multiplexer (output = K9450)
FB87 = 2nd multiplexer (output = K9451)
FB88 = 3rd multiplexer (output = K9452)

Function:
An input quantity is connected through to the output depending on the control bits:

B3	B2	B1	Output y
0	0	0	X0
0	0	1	X1
0	1	0	X2
0	1	1	X3
1	0	0	X4
1	0	1	X5
1	1	0	X6
1	1	1	X7

U310 (2310) * S00 (B195)	**Source for control bits for the multiplexer** 0 = Binector B0000 1 = Binector B0001 etc. i001: Control bit B1 for 1st multiplexer i002: Control bit B2 i003: Control bit B3 i004: Control bit B1 for 2nd multiplexer i005: Control bit B2 i006: Control bit B3 i007: Control bit B1 for 3rd multiplexer i008: Control bit B2 i009: Control bit B3	[SW 1.8 and later]	All binector numbers 1	Ind: 9 FS=0 Type: L2	P052 = 3 P051 = 40 Offline
U311 (2311) * S00 (B195)	**Source for input quantities for 1st multiplexer** 0 = Connector K0000 1 = Connector K0001 etc. i001 Input quantity X0 i002 Input quantity X1 i003 Input quantity X2 i004 Input quantity X3 i005 Input quantity X4 i006 Input quantity X5 i007 Input quantity X6 i008 Input quantity X7	[SW 1.8 and later]	All connector numbers 1	Ind: 8 FS=0 Type: L2	P052 = 3 P051 = 40 Offline
U312 (2312) * S00 (B195)	**Source for input quantities for 2nd multiplexer** 0 = Connector K0000 1 = Connector K0001 etc. i001 Input quantity X0 i002 Input quantity X1 i003 Input quantity X2 i004 Input quantity X3 i005 Input quantity X4 i006 Input quantity X5 i007 Input quantity X6 i008 Input quantity X7	[SW 1.8 and later]	All connector numbers 1	Ind: 8 FS=0 Type: L2	P052 = 3 P051 = 40 Offline

PNU	Description	Value range [Unit] Steps	No. indices Factory setting Type	See Change (Access / Status)
U313 (2313) * S00 (B195)	**Source for input quantities for 3rd multiplexer** [SW 1.8 and later] 0 = Connector K0000 1 = Connector K0001 etc. i001 Input quantity X0 i002 Input quantity X1 i003 Input quantity X2 i004 Input quantity X3 i005 Input quantity X4 i006 Input quantity X5 i007 Input quantity X6 i008 Input quantity X7	All connector numbers 1	Ind: 8 FS=0 Type: L2	P052 = 3 P051 = 40 Offline

11.63 Counters

Software counter				**FB 89**
n314 (2314) S00 (B196)	**Display of output of software counter** **FB 89** [SW 1.9 and later]	0 to 65535	Ind: None Type: O2	P052 = 3
U315 (2315) * S00 (B196)	**Fixed values for setting/limiting inputs of software counter** **FB 89** [SW 1.9 and later] i001: Minimum value i002: Maximum value i003: Setting value i004: Start value	0 to 65535 1	Ind: 4 FS= i001: 0 i002: 65535 i003: 0 i004: 0 Type: O2	P052 = 3 P051 = 40 Offline
U316 (2316) * S00 (B196)	**Source for setting/limiting inputs of software counter** **FB 89** [SW 1.9 and later] i001: Minimum value i002: Maximum value i003: Setting value i004: Start value Settings: 0 = connector K0000 1 = connector K0001 etc.	All connector numbers 1	Ind: 4 FS= i001: 9441 i002: 9442 i003: 9443 i004: 9444 Type: L2	P052 = 3 P051 = 40 Offline
U317 (2317) * S00 (B196)	**Source for control signals of software counter** **FB 89** [SW 1.9 and later] i001: Positive edge: Count up i002: Positive edge: Count down i003: Stop counter i004: Set counter i005: Enable counter Settings: 0 = binector B0000 1 = binector B0001 etc.	All binector numbers 1	Ind: 5 FS= i001: 0 i002: 0 i003: 0 i004: 0 i005: 1 Type: L2	P052 = 3 P051 = 40 Offline

11.64 Logic functions

Decoders / demultiplexers, binary to 1 of 8				
U318 (2318) * S00 (B200)	**Source for input signals for decoder/demultiplexer 1** **FB 118** i001 Source for input signal, bit 0 i002 Source for input signal, bit 1 i003 Source for input signal, bit 2 Settings: 0 = binector B0000 1 = binector B0001 etc.	All binector numbers 1	Ind: 3 FS=0 Type: L2	P052 = 3 P051 = 40 Offline

PNU	Description		Value range [Unit] Steps	No. indices Factory setting Type	See Change (Access / Status)
U319 (2319) * S00 (B200)	**Source for input signals for decoder/demultiplexer 2** i001 Source for input signal, bit 0 i002 Source for input signal, bit 1 i003 Source for input signal, bit 2 Settings: 0 = binector B0000 1 = binector B0001 etc.	**FB 119**	All binector numbers 1	Ind: 3 FS=0 Type: L2	P052 = 3 P051 = 40 Offline

AND elements with 3 inputs each The input signals selected via the 3 indices of the parameter are ANDed and the result of the logic operation applied to the specified binector.					
U320 (2320) * S00 (B205)	**Source for input signals, AND element 1** (output = B9350) i001 Source for input 1 i002 Source for input 2 i003 Source for input 3 Settings: 0 = binector B0000 1 = binector B0001 etc.	**FB 120**	All binector numbers 1	Ind: 3 FS= i001: 14 i002: 9054 i003: 1 Type: L2	P052 = 3 P051 = 40 Offline
U321 (2321) * S00 (B205)	**Source for input signals, AND element 2** (output = B9351) As for U320	**FB 121**	All binector numbers 1	Ind: 3 FS= i001: 9081 i002: 250 i003: 9456 Type: L2	P052 = 3 P051 = 40 Offline
U322 (2322) * S00 (B205)	**Source for input signals, AND element 3** (output = B9352) As for U320	**FB 122**	All binector numbers 1	Ind: 3 FS= i001: 9063 i002: 9065 i003: 9551 Type: L2	P052 = 3 P051 = 40 Offline
U323 (2323) * S00 (B205)	**Source for input signals, AND element 4** (output = B9353) As for U320	**FB 123**	All binector numbers 1	Ind: 3 FS= i001: 9064 i002: 9066 i003: 1 Type: L2	P052 = 3 P051 = 40 Offline
U324 (2324) * S00 (B205)	**Source for input signals, AND element 5** (output = B9354) As for U320	**FB 124**	All binector numbers 1	Ind: 3 FS= i001: 9057 i002: 151 i003: 145 Type: L2	P052 = 3 P051 = 40 Offline
U325 (2325) * S00 (B205)	**Source for input signals, AND element 6** (output = B9355) As for U320	**FB 125**	All binector numbers 1	Ind: 3 FS= i001: 149 i002: 9451 i003: 9452 Type: L2	P052 = 3 P051 = 40 Offline
U326 (2326) * S00 (B205)	**Source for input signals, AND element 7** (output = B9356) As for U320	**FB 126**	All binector numbers 1	Ind: 3 FS= i001: 9354 i002: 9355 i003: 1 Type: L2	P052 = 3 P051 = 40 Offline
U327 (2327) * S00 (B205)	**Source for input signals, AND element 8** (output = B9357) As for U320	**FB 127**	All binector numbers 1	Ind: 3 FS= i001: 9356 i002: 9367 i003: 1 Type: L2	P052 = 3 P051 = 40 Offline
U328 (2328) * S00 (B205)	**Source for input signals, AND element 9** (output = B9358) As for U320	**FB 128**	All binector numbers 1	Ind: 3 FS= i001: 9380 i002: 9553 i003: 170 Type: L2	P052 = 3 P051 = 40 Offline

PNU	Description		Value range [Unit] Steps	No. indices Factory setting Type	See Change (Access / Status)
U329 (2329) * S00 (B205)	**Source for input signals, AND element 10** (output = B9359) As for U320	**FB 129**	All binector numbers 1	Ind: 3 FS= i001: 9470 i002: 9456 i003: 1 Type: L2	P052 = 3 P051 = 40 Offline
U330 (2330) * S00 (B205)	**Source for input signals, AND element 11** (output = B9360) As for U320	**FB 130**	All binector numbers 1	Ind: 3 FS= i001: 9065 i002: 9066 i003: 9551 Type: L2	P052 = 3 P051 = 40 Offline
U331 (2331) * S00 (B205)	**Source for input signals, AND element 12** (output = B9361) As for U320	**FB 131**	All binector numbers 1	Ind: 3 FS= i001: 255 i002: 9381 i003: 1 Type: L2	P052 = 3 P051 = 40 Offline
U332 (2332) * S00 (B205)	**Source for input signals, AND element 13** (output = B9362) As for U320	**FB 132**	All binector numbers 1	Ind: 3 FS= i001: 9063 i002: 9074 i003: 1 Type: L2	P052 = 3 P051 = 40 Offline
U333 (2333) * S00 (B205)	**Source for input signals, AND element 14** (output = B9363) As for U320	**FB 133**	All binector numbers 1	Ind: 3 FS= i001: 9064 i002: 9075 i003: 9551 Type: L2	P052 = 3 P051 = 40 Offline
U334 (2334) * S00 (B205)	**Source for input signals, AND element 15** (output = B9364) As for U320	**FB 134**	All binector numbers 1	Ind: 3 FS= i001: 9454 i002: 9361 i003: 1 Type: L2	P052 = 3 P051 = 40 Offline
U335 (2335) * S00 (B205)	**Source for input signals, AND element 16** (output = B9365) As for U320	**FB 135**	All binector numbers 1	Ind: 3 FS= i001: 250 i002: 9455 i003: 1 Type: L2	P052 = 3 P051 = 40 Offline
U336 (2336) * S00 (B205)	**Source for input signals, AND element 17** (output = B9366) As for U320	**FB 136**	All binector numbers 1	Ind: 3 FS= i001: 9361 i002: 9080 i003: 1 Type: L2	P052 = 3 P051 = 40 Offline
U337 (2337) * S00 (B205)	**Source for input signals, AND element 18** (output = B9367) As for U320	**FB 137**	All binector numbers 1	Ind: 3 FS= i001: 9456 i002: 105 i003: 9059 Type: L2	P052 = 3 P051 = 40 Offline
U338 (2338) * S00 (B205)	**Source for input signals, AND element 19** (output = B9368) As for U320	**FB 138**	All binector numbers 1	Ind: 3 FS= i001: 9382 i002: 9083 i003: 1 Type: L2	P052 = 3 P051 = 40 Offline
U339 (2339) * S00 (B205)	**Source for input signals, AND element 20** (output = B9369) As for U320	**FB 139**	All binector numbers 1	Ind: 3 FS=1 Type: L2	P052 = 3 P051 = 40 Offline
U340 (2340) * S00 (B205)	**Source for input signals, AND element 21** (output = B9370) As for U320	**FB 140**	All binector numbers 1	Ind: 3 FS=1 Type: L2	P052 = 3 P051 = 40 Offline

PNU	Description		Value range [Unit] Steps	No. indices Factory setting Type	See Change (Access / Status)
U341 (2341) * S00 (B205)	**Source for input signals, AND element 22** (output = B9371) As for U320	**FB 141**	All binector numbers 1	Ind: 3 FS=1 Type: L2	P052 = 3 P051 = 40 Offline
U342 (2342) * S00 (B205)	**Source for input signals, AND element 23** (output = B9372) As for U320	**FB 142**	All binector numbers 1	Ind: 3 FS=1 Type: L2	P052 = 3 P051 = 40 Offline
U343 (2343) * S00 (B205)	**Source for input signals, AND element 24** (output = B9373) As for U320	**FB 143**	All binector numbers 1	Ind: 3 FS=1 Type: L2	P052 = 3 P051 = 40 Offline
U344 (2344) * S00 (B205)	**Source for input signals, AND element 25** (output = B9374) As for U320	**FB 144**	All binector numbers 1	Ind: 3 FS=1 Type: L2	P052 = 3 P051 = 40 Offline
U345 (2345) * S00 (B205)	**Source for input signals, AND element 26** (output = B9375) As for U320	**FB 145**	All binector numbers 1	Ind: 3 FS=1 Type: L2	P052 = 3 P051 = 40 Offline
U346 (2346) * S00 (B205)	**Source for input signals, AND element 27** (output = B9376) As for U320	**FB 146**	All binector numbers 1	Ind: 3 FS=1 Type: L2	P052 = 3 P051 = 40 Offline
U347 (2347) * S00 (B205)	**Source for input signals, AND element 28** (output = B9377) As for U320	**FB 147**	All binector numbers 1	Ind: 3 FS=1 Type: L2	P052 = 3 P051 = 40 Offline

OR elements with 3 inputs each

The input signals selected via the 3 indices of the parameter are ORed and the result of the logic operation applied to the specified binector.

U350 (2350) * S00 (B206)	**Source for input signals, OR element 1** (output = B9380) i001 Source for input 1 i002 Source for input 2 i003 Source for input 3 Settings: 0 = binector B0000 1 = binector B0001 etc.	**FB 150**	All binector numbers 1	Ind: 3 FS= i001: 9352 i002: 9353 i003: 0 Type: L2	P052 = 3 P051 = 40 Offline
U351 (2351) * S00 (B206)	**Source for input signals, OR element 2** (output = B9381) As for U350	**FB 151**	All binector numbers 1	Ind: 3 FS= i001: 9554 i002: 9360 i003: 0 Type: L2	P052 = 3 P051 = 40 Offline
U352 (2352) * S00 (B206)	**Source for input signals, OR element 3** (output = B9382) As for U350	**FB 152**	All binector numbers 1	Ind: 3 FS= i001: 9362 i002: 9363 i003: 0 Type: L2	P052 = 3 P051 = 40 Offline
U353 (2353) * S00 (B206)	**Source for input signals, OR element 4** (output = B9383) As for U350	**FB 153**	All binector numbers 1	Ind: 3 FS= i001: 9365 i002: 9366 i003: 0 Type: L2	P052 = 3 P051 = 40 Offline
U354 (2354) * S00 (B206)	**Source for input signals, OR element 5** (output = B9384) As for U350	**FB 154**	All binector numbers 1	Ind: 3 FS= i001: 9063 i002: 9064 i003: 0 Type: L2	P052 = 3 P051 = 40 Offline

PNU	Description		Value range [Unit] Steps	No. indices Factory setting Type	See Change (Access / Status)
U355 (2355) * S00 (B206)	**Source for input signals, OR element 6** (output = B9385) As for U350	**FB 155**	All binector numbers 1	Ind: 3 FS=0 Type: L2	P052 = 3 P051 = 40 Offline
U356 (2356) * S00 (B206)	**Source for input signals, OR element 7** (output = B9386) As for U350	**FB 156**	All binector numbers 1	Ind: 3 FS=0 Type: L2	P052 = 3 P051 = 40 Offline
U357 (2357) * S00 (B206)	**Source for input signals, OR element 8** (output = B9387) As for U350	**FB 157**	All binector numbers 1	Ind: 3 FS=0 Type: L2	P052 = 3 P051 = 40 Offline
U358 (2358) * S00 (B206)	**Source for input signals, OR element 9** (output = B9388) As for U350	**FB 158**	All binector numbers 1	Ind: 3 FS=0 Type: L2	P052 = 3 P051 = 40 Offline
U359 (2359) * S00	**Source for input signals, OR element 10** (output = B9389) As for U350	**FB 159**	All binector numbers 1	Ind: 3 FS=0 Type: L2	P052 = 3 P051 = 40 Offline
U360 (2360) * S00 (B206)	**Source for input signals, OR element 11** (output = B9390) As for U350	**FB 160**	All binector numbers 1	Ind: 3 FS=0 Type: L2	P052 = 3 P051 = 40 Offline
U361 (2361) * S00 (B206)	**Source for input signals, OR element 12** (output = B9391) As for U350	**FB 161**	All binector numbers 1	Ind: 3 FS=0 Type: L2	P052 = 3 P051 = 40 Offline
U362 (2362) * S00 (B206)	**Source for input signals, OR element 13** (output = B9392) As for U350	**FB 162**	All binector numbers 1	Ind: 3 FS=0 Type: L2	P052 = 3 P051 = 40 Offline
U363 (2363) * S00 (B206)	**Source for input signals, OR element 14** (output = B9393) As for U350	**FB 163**	All binector numbers 1	Ind: 3 FS=0 Type: L2	P052 = 3 P051 = 40 Offline
U364 (2364) * S00 (B206)	**Source for input signals, OR element 15** (output = B9394) As for U350	**FB 164**	All binector numbers 1	Ind: 3 FS=0 Type: L2	P052 = 3 P051 = 40 Offline
U365 (2365) * S00 (B206)	**Source for input signals, OR element 16** (output = B9395) As for U350	**FB 165**	All binector numbers 1	Ind: 3 FS=0 Type: L2	P052 = 3 P051 = 40 Offline
U366 (2366) * S00 (B206)	**Source for input signals, OR element 17** (output = B9396) As for U350	**FB 166**	All binector numbers 1	Ind: 3 FS=0 Type: L2	P052 = 3 P051 = 40 Offline
U367 (2367) * S00 (B206)	**Source for input signals, OR element 18** (output = B9397) As for U350	**FB 167**	All binector numbers 1	Ind: 3 FS=0 Type: L2	P052 = 3 P051 = 40 Offline
U368 (2368) * S00 (B206)	**Source for input signals, OR element 19** (output = B9398) As for U350	**FB 168**	All binector numbers 1	Ind: 3 FS=0 Type: L2	P052 = 3 P051 = 40 Offline

PNU	Description		Value range [Unit] Steps	No. indices Factory setting Type	See Change (Access / Status)
U369 (2369) * S00 (B206)	**Source for input signals, OR element 20** (output = B9399) As for U350	**FB 169**	All binector numbers 1	Ind: 3 FS=0 Type: L2	P052 = 3 P051 = 40 Offline

EXCLUSIVE OR elements with 2 inputs each

The input signals selected via the 2 indices of the parameter are combined in an EXCLUSIVE OR (XOR) operation and the result applied to the specified binector.

U370 (2370) * S00 (B206)	**Source for input signals, XOR element 1** (output = B9195) i001 Source for input 1 i002 Source for input 2 Settings: 0 = binector B0000 1 = binector B0001 etc.	**FB 170**	All binector numbers 1	Ind: 2 FS=0 Type: L2	P052 = 3 P051 = 40 Offline
U371 (2371) * S00 (B206)	**Source for input signals, XOR element 2** (output = B9196) As for U370	**FB 171**	All binector numbers 1	Ind: 2 FS=0 Type: L2	P052 = 3 P051 = 40 Offline
U372 (2372) * S00 (B206)	**Source for input signals, XOR element 3** (output = B9197) As for U370	**FB 172**	All binector numbers 1	Ind: 2 FS=0 Type: L2	P052 = 3 P051 = 40 Offline
U373 (2373) * S00 (B206)	**Source for input signals, XOR element 4** (output = B9198) As for U370	**FB 173**	All binector numbers 1	Ind: 2 FS=0 Type: L2	P052 = 3 P051 = 40 Offline

Inverters

The input signal is inverted and the result applied to the specified binector.

U380 (2380) * S00 (B207)	**Source for input signal, inverter 1** (output = B9450) 0 = binector B0000 1 = binector B0001 etc.	**FB 180**	All binector numbers 1	Ind: None FS=9081 Type: L2	P052 = 3 P051 = 40 Offline
U381 (2381) * S00 (B207)	**Source for input signal, inverter 2** (output = B9451) As for U380	**FB 181**	All binector numbers 1	Ind: None FS=186 Type: L2	P052 = 3 P051 = 40 Offline
U382 (2382) * S00 (B207)	**Source for input signal, inverter 3** (output = B9452) As for U380	**FB 182**	All binector numbers 1	Ind: None FS=189 Type: L2	P052 = 3 P051 = 40 Offline
U383 (2383) * S00 (B207)	**Source for input signal, inverter 4** (output = B9453) As for U380	**FB 183**	All binector numbers 1	Ind: None FS=9356 Type: L2	P052 = 3 P051 = 40 Offline
U384 (2384) * S00 (B207)	**Source for input signal, inverter 5** (output = B9454) As for U380	**FB 184**	All binector numbers 1	Ind: None FS=9358 Type: L2	P052 = 3 P051 = 40 Offline
U385 (2385) * S00 (B207)	**Source for input signal, inverter 6** (output = B9455) As for U380	**FB 185**	All binector numbers 1	Ind: None FS=9080 Type: L2	P052 = 3 P051 = 40 Offline
U386 (2386) * S00 (B207)	**Source for input signal, inverter 7** (output = B9456) As for U380	**FB 186**	All binector numbers 1	Ind: None FS=9384 Type: L2	P052 = 3 P051 = 40 Offline

PNU	Description		Value range [Unit] Steps	No. indices Factory setting Type	See Change (Access / Status)
U387 (2387) * S00 (B207)	**Source for input signal, inverter 8** (output = B9457) As for U380	**FB 187**	All binector numbers 1	Ind: None FS=0 Type: L2	P052 = 3 P051 = 40 Offline
U388 (2388) * S00 (B207)	**Source for input signal, inverter 9** (output = B9458) As for U380	**FB 188**	All binector numbers 1	Ind: None FS=0 Type: L2	P052 = 3 P051 = 40 Offline
U389 (2389) * S00 (B207)	**Source for input signal, inverter 10** (output = B9459) As for U380	**FB 189**	All binector numbers 1	Ind: None FS=0 Type: L2	P052 = 3 P051 = 40 Offline
U390 (2390) * S00 (B207)	**Source for input signal, inverter 11** (output = B9460) As for U380	**FB 190**	All binector numbers 1	Ind: None FS=0 Type: L2	P052 = 3 P051 = 40 Offline
U391 (2391) * S00 (B207)	**Source for input signal, inverter 12** (output = B9461) As for U380	**FB 191**	All binector numbers 1	Ind: None FS=0 Type: L2	P052 = 3 P051 = 40 Offline
U392 (2392) * S00 (B207)	**Source for input signal, inverter 13** (output = B9462) As for U380	**FB 192**	All binector numbers 1	Ind: None FS=0 Type: L2	P052 = 3 P051 = 40 Offline
U393 (2393) * S00 (B207)	**Source for input signal, inverter 14** (output = B9463) As for U380	**FB 193**	All binector numbers 1	Ind: None FS=0 Type: L2	P052 = 3 P051 = 40 Offline
U394 (2394) * S00 (B207)	**Source for input signal, inverter 15** (output = B9464) As for U380	**FB 194**	All binector numbers 1	Ind: None FS=0 Type: L2	P052 = 3 P051 = 40 Offline
U395 (2395) * S00 (B207)	**Source for input signal, inverter 16** (output = B9465) As for U380	**FB 195**	All binector numbers 1	Ind: None FS=0 Type: L2	P052 = 3 P051 = 40 Offline

NAND elements with 3 inputs each

The input signals selected via the 3 indices of the parameter are combined in an NAND operation and the result applied to the specified binector.

U400 (2400) * S00 (B207)	**Source for input signals, NAND element 1** (output = B9470) i001 Source for input 1 i002 Source for input 2 i003 Source for input 3 Settings: 0 = binector B0000 1 = binector B0001 etc.	**FB 200**	All binector numbers 1	Ind: 3 FS= i001: 9065 i002: 9066 i003: 9551 Type: L2	P052 = 3 P051 = 40 Offline
U401 (2401) * S00 (B207)	**Source for input signals, NAND element 2** (output = B9471) As for U400	**FB 201**	All binector numbers 1	Ind: 3 FS=1 Type: L2	P052 = 3 P051 = 40 Offline
U402 (2402) * S00 (B207)	**Source for input signals, NAND element 3** (output = B9472) As for U400	**FB 202**	All binector numbers 1	Ind: 3 FS=1 Type: L2	P052 = 3 P051 = 40 Offline

PNU	Description		Value range [Unit] Steps	No. indices Factory setting Type	See Change (Access / Status)
U403 (2403) * S00 (B207)	**Source for input signals, NAND element 4** (output = B9473) As for U400	**FB 203**	All binector numbers 1	Ind: 3 FS=1 Type: L2	P052 = 3 P051 = 40 Offline
U404 (2404) * S00 (B207)	**Source for input signals, NAND element 5** (output = B9474) As for U400	**FB 204**	All binector numbers 1	Ind: 3 FS=1 Type: L2	P052 = 3 P051 = 40 Offline
U405 (2405) * S00 (B207)	**Source for input signals, NAND element 6** (output = B9475) As for U400	**FB 205**	All binector numbers 1	Ind: 3 FS=1 Type: L2	P052 = 3 P051 = 40 Offline
U406 (2406) * S00 (B207)	**Source for input signals, NAND element 7** (output = B9476) As for U400	**FB 206**	All binector numbers 1	Ind: 3 FS=1 Type: L2	P052 = 3 P051 = 40 Offline
U407 (2407) * S00 (B207)	**Source for input signals, NAND element 8** (output = B9477) As for U400	**FB 207**	All binector numbers 1	Ind: 3 FS=1 Type: L2	P052 = 3 P051 = 40 Offline
U408 (2408) * S00 (B207)	**Source for input signals, NAND element 9** (output = B9478) As for U400	**FB 208**	All binector numbers 1	Ind: 3 FS=1 Type: L2	P052 = 3 P051 = 40 Offline
U409 (2409) * S00 (B207)	**Source for input signals, NAND element 10** (output = B9479) As for U400	**FB 209**	All binector numbers 1	Ind: 3 FS=1 Type: L2	P052 = 3 P051 = 40 Offline
U410 (2410) * S00 (B207)	**Source for input signals, NAND element 11** (output = B9480) As for U400	**FB 210**	All binector numbers 1	Ind: 3 FS=1 Type: L2	P052 = 3 P051 = 40 Offline
U411 (2411) * S00 (B207)	**Source for input signals, NAND element 12** (output = B9481) As for U400	**FB 211**	All binector numbers 1	Ind: 3 FS=1 Type: L2	P052 = 3 P051 = 40 Offline

11.65 Storage elements, timers and binary signal selector switches

RS flipflops RS flipflops with SET (Q=1) and RESET (Q=0) (priority: 1st RESET, 2nd SET). RESET setting is enabled on POWER ON.					
U415 (2415) * S00 (B210)	**Source for SET and RESET for RS flipflop 1** (outputs: Q = B9550, /Q = B9551) i001 Source for SET i002 Source for RESET Settings: 0 = binector B0000 1 = binector B0001 etc.	**FB 215**	All binector numbers 1	Ind: 2 FS= i001: 9450 i002: 9351 Type: L2	P052 = 3 P051 = 40 Offline
U416 (2416) * S00 (B210)	**Source for SET and RESET for RS flipflop 2** (outputs: Q = B9552, /Q = B9553) As for U415	**FB 216**	All binector numbers 1	Ind: 2 FS= i001: 9453 i002: 9357 Type: L2	P052 = 3 P051 = 40 Offline
U417 (2417) * S00 (B210)	**Source for SET and RESET for RS flipflop 3** (outputs: Q = B9554, /Q = B9555) As for U415	**FB 217**	All binector numbers 1	Ind: 2 FS= i001: 9359 i002: 9360 Type: L2	P052 = 3 P051 = 40 Offline

PNU	Description		Value range [Unit] Steps	No. indices Factory setting Type	See Change (Access / Status)
U418 (2418) * S00 (B210)	**Source for SET and RESET for RS flipflop 4** (outputs: Q = B9556, /Q = B9557) As for U415	**FB 218**	All binector numbers 1	Ind: 2 FS=0 Type: L2	P052 = 3 P051 = 40 Offline
U419 (2419) * S00 (B210)	**Source for SET and RESET for RS flipflop 5** (outputs: Q = B9558, /Q = B9559) As for U415	**FB 219**	All binector numbers 1	Ind: 2 FS=0 Type: L2	P052 = 3 P051 = 40 Offline
U420 (2420) * S00 (B210)	**Source for SET and RESET for RS flipflop 6** (outputs: Q = B9560, /Q = B9561) As for U415	**FB 220**	All binector numbers 1	Ind: 2 FS=0 Type: L2	P052 = 3 P051 = 40 Offline
U421 (2421) * S00 (B210)	**Source for SET and RESET for RS flipflop 7** (outputs: Q = B9562, /Q = B9563) As for U415	**FB 221**	All binector numbers 1	Ind: 2 FS=0 Type: L2	P052 = 3 P051 = 40 Offline
U422 (2422) * S00 (B210)	**Source for SET and RESET for RS flipflop 8** (outputs: Q = B9564, /Q = B9565) As for U415	**FB 222**	All binector numbers 1	Ind: 2 FS=0 Type: L2	P052 = 3 P051 = 40 Offline
U423 (2423) * S00 (B210)	**Source for SET and RESET for RS flipflop 9** (outputs: Q = B9566, /Q = B9567) As for U415	**FB 223**	All binector numbers 1	Ind: 2 FS=0 Type: L2	P052 = 3 P051 = 40 Offline
U424 (2424) * S00 (B210)	**Source for SET and RESET for RS flipflop 10** (outputs: Q = B9568, /Q = B9569) As for U415	**FB 224**	All binector numbers 1	Ind: 2 FS=0 Type: L2	P052 = 3 P051 = 40 Offline
U425 (2425) * S00 (B210)	**Source for SET and RESET for RS flipflop 11** (outputs: Q = B9570, /Q = B9571) As for U415	**FB 225**	All binector numbers 1	Ind: 2 FS=0 Type: L2	P052 = 3 P051 = 40 Offline
U426 (2426) * S00 (B210)	**Source for SET and RESET for RS flipflop 12** (outputs: Q = B9572, /Q = B9573) As for U415	**FB 226**	All binector numbers 1	Ind: 2 FS=0 Type: L2	P052 = 3 P051 = 40 Offline
U427 (2427) * S00 (B210)	**Source for SET and RESET for RS flipflop 13** (outputs: Q = B9574, /Q = B9575) As for U415	**FB 227**	All binector numbers 1	Ind: 2 FS=0 Type: L2	P052 = 3 P051 = 40 Offline
U428 (2428) * S00 (B210)	**Source for SET and RESET for RS flipflop 14** (outputs: Q = B9576, /Q = B9577) As for U415	**FB 228**	All binector numbers 1	Ind: 2 FS=0 Type: L2	P052 = 3 P051 = 40 Offline

D flipflops D flipflops with RESET (Q=0), SET (Q=1) and STORE (Q=D on transition from 0 to 1) (priority: 1st RESET, 2nd SET, 3rd STORE). RESET setting is enabled on POWER ON.					
U430 (2430) * S00 (B211)	**Source for SET, D, STORE and RESET for D flipflop 1** (outputs: Q = B9490, /Q = B9491) i001 Source for SET i002 Source for D i003 Source for STORE i004 Source for RESET Settings: 0 = binector B0000 1 = binector B0001 etc.	**FB 230**	All binector numbers 1	Ind: 4 FS=0 Type: L2	P052 = 3 P051 = 40 Offline

PNU	Description		Value range [Unit] Steps	No. indices Factory setting Type	See Change (Access / Status)
U431 (2431) * S00 (B211)	**Source for SET, D, STORE and RESET for D flipflop 2** (outputs: Q = B9492, /Q = B9493) As for U430	**FB 231**	All binector numbers 1	Ind: 4 FS=0 Type: L2	P052 = 3 P051 = 40 Offline
U432 (2432) * S00 (B211)	**Source for SET, D, STORE and RESET for D flipflop 3** (outputs: Q = B9494, /Q = B9495) As for U430	**FB 232**	All binector numbers 1	Ind: 4 FS=0 Type: L2	P052 = 3 P051 = 40 Offline
U433 (2433) * S00 (B211)	**Source for SET, D, STORE and RESET for D flipflop 4** (outputs: Q = B9496, /Q = B9497) As for U430	**FB 233**	All binector numbers 1	Ind: 4 FS=0 Type: L2	P052 = 3 P051 = 40 Offline
Timer 1 (0.000 to 60.000s) (output = B9580, inverted: B9581)					
U440 (2440) * S00 (B215)	**Source for input signal and reset signal for timer element 1** i001 Source for input signal i002 Source for reset signal for the pulse generator (if U442=3) (in state "1", the pulse generator is set to "0") Settings: 0 = Binector B0000 1 = Binector B0001 etc.	**FB 240**	All binector numbers 1	Ind: 2 FS= i001: 9364 i002: 0 Type: L2	P052 = 3 P051 = 40 Offline
U441 (2441) S00 (B215)	**Time for timer 1**	**FB 240**	0.000 to 60.000 [s] 0.001	Ind: None FS=10.500 Type: O2	P052 = 3 P051 = 40 Offline
U442 (2442) * S00 (B215)	**Mode for timer 1** 0 ON delay 1 OFF delay 2 ON / OFF delay 3 Pulse generator with positive edge triggering	**FB 240**	0 to 3 1	Ind: None FS=0 Type: O2	P052 = 3 P051 = 40 Offline
Timer 2 (0.000 to 60.000s) (output = B9582, inverted: B9583)					
U443 (2443) * S00 (B215)	**Source for input signal for timer 2** As for U440	**FB 241**	All binector numbers 1	Ind: 2 FS= i001: 9383 i002: 0 Type: L2	P052 = 3 P051 = 40 Offline
U444 (2444) S00 (B215)	**Time for timer 2**	**FB 241**	0.000 to 60.000 [s] 0.001	Ind: None FS=0.500 Type: O2	P052 = 3 P051 = 40 Offline
U445 (2445) * S00 (B215)	**Mode for timer 2** As for U442	**FB 241**	0 to 3 1	Ind: None FS=0 Type: O2	P052 = 3 P051 = 40 Offline
Timer 3 (0.000 to 60.000s) (output = B9584, inverted: B9585)					
U446 (2446) * S00 (B215)	**Source for input signal for timer 3** As for U440	**FB 242**	All binector numbers 1	Ind: 2 FS=0 Type: L2	P052 = 3 P051 = 40 Offline
U447 (2447) S00 (B215)	**Time for timer 3**	**FB 242**	0.000 to 60.000 [s] 0.001	Ind: None FS=0.000 Type: O2	P052 = 3 P051 = 40 Offline
U448 (2448) * S00 (B215)	**Mode for timer 3** As for U442	**FB 242**	0 to 3 1	Ind: None FS=0 Type: O2	P052 = 3 P051 = 40 Offline

PNU	Description		Value range [Unit] Steps	No. indices Factory setting Type	See Change (Access / Status)
Timer 4 (0.000 to 60.000s) (output = B9586, inverted: B9587)					
U449 (2449) * S00 (B215)	**Source for input signal for timer 4** As for U440	**FB 243**	All binector numbers 1	Ind: None FS=0 Type: L2	P052 = 3 P051 = 40 Offline
U450 (2450) S00 (B215)	**Time for timer 4**	**FB 243**	0.000 to 60.000 [s] 0.001	Ind: None FS=0.000 Type: O2	P052 = 3 P051 = 40 Offline
U451 (2451) * S00 (B215)	**Mode for timer 4** As for U442	**FB 243**	0 to 3 1	Ind: None FS=0 Type: O2	P052 = 3 P051 = 40 Offline
Timer 5 (0.000 to 60.000s) (output = B9588, inverted: B9589)					
U452 (2452) * S00 (B215)	**Source for input signal for timer 5** As for U440	**FB 244**	All binector numbers 1	Ind: 2 FS=0 Type: L2	P052 = 3 P051 = 40 Offline
U453 (2453) S00 (B215)	**Time for timer 5**	**FB 244**	0.000 to 60.000 [s] 0.001	Ind: None FS=0.000 Type: O2	P052 = 3 P051 = 40 Offline
U454 (2454) * S00 (B215)	**Mode for timer 5** As for U442	**FB 244**	0 to 3 1	Ind: None FS=0 Type: O2	P052 = 3 P051 = 40 Offline
Timer 6 (0.000 to 60.000s) (output = B9590, inverted: B9591)					
U455 (2455) * S00 (B215)	**Source for input signal for timer 6** As for U440	**FB 245**	All binector numbers 1	Ind: 2 FS=0 Type: L2	P052 = 3 P051 = 40 Offline
U456 (2456) S00 (B215)	**Time for timer 6**	**FB 245**	0.000 to 60.000 [s] 0.001	Ind: None FS=0.000 Type: O2	P052 = 3 P051 = 40 Offline
U457 (2457) * S00 (B215)	**Mode for timer 6** As for U442	**FB 245**	0 to 3 1	Ind: None FS=0 Type: O2	P052 = 3 P051 = 40 Offline
Timer 7 (0.00 to 600.00s) (output = B9592, inverted: B9593)					
U458 (2458) * S00 (B216)	**Source for input signal for timer 7** As for U440	**FB 246**	All binector numbers 1	Ind: 2 FS=0 Type: L2	P052 = 3 P051 = 40 Offline
U459 (2459) S00 (B216)	**Time for timer 7**	**FB 246**	0.00 to 600.00 [s] 0.01	Ind: None FS=0.00 Type: O2	P052 = 3 P051 = 40 Offline
U460 (2460) * S00 (B216)	**Mode for timer 7** As for U442	**FB 246**	0 to 3 1	Ind: None FS=0 Type: O2	P052 = 3 P051 = 40 Offline

PNU	Description		Value range [Unit] Steps	No. indices Factory setting Type	See Change (Access / Status)
Timer 8 (0.00 to 600.00s) (output = B9594, inverted: B9595)					
U461 (2461) * S00 (B216)	**Source for input signal for timer 8** As for U440	**FB 247**	All binector numbers 1	Ind: 2 FS=0 Type: L2	P052 = 3 P051 = 40 Offline
U462 (2462) S00 (B216)	**Time for timer 8**	**FB 247**	0.00 to 600.00 [s] 0.01	Ind: None FS=0.00 Type: O2	P052 = 3 P051 = 40 Offline
U463 (2463) * S00 (B216)	**Mode for timer 8** As for U442	**FB 247**	0 to 3 1	Ind: None FS=0 Type: O2	P052 = 3 P051 = 40 Offline
Timer 9 (0.00 to 600.00s) (output = B9596, inverted: B9597)					
U464 (2464) * S00 (B216)	**Source for input signal for timer 9** As for U440	**FB 248**	All binector numbers 1	Ind: 2 FS=0 Type: L2	P052 = 3 P051 = 40 Offline
U465 (2465) S00 (B216)	**Time for timer 9**	**FB 248**	0.00 to 600.00 [s] 0.01	Ind: None FS=0.00 Type: O2	P052 = 3 P051 = 40 Offline
U466 (2466) * S00 (B216)	**Mode for timer 9** As for U442	**FB 248**	0 to 3 1	Ind: None FS=0 Type: O2	P052 = 3 P051 = 40 Offline
Timer 10 (0.00 to 600.00s) (output = B9598, inverted: B9599)					
U467 (2467) * S00 (B216)	**Source for input signal for timer 10** As for U440	**FB 249**	All binector numbers 1	Ind: 2 FS=0 Type: L2	P052 = 3 P051 = 40 Offline
U468 (2468) S00 (B216)	**Time for timer 10**	**FB 249**	0.00 to 600.00 [s] 0.01	Ind: None FS=0.00 Type: O2	P052 = 3 P051 = 40 Offline
U469 (2469) * S00 (B216)	**Mode for timer 10** As for U442	**FB 249**	0 to 3 1	Ind: None FS=0 Type: O2	P052 = 3 P051 = 40 Offline
Binary signal selector switches The control signal (binector) is selected via index i001 of the parameter. Control signal = 0: Binector as set in index i002 is applied to the output Control signal = 1: Binector as set in index i003 is applied to the output					
U470 (2470) * S00 (B216)	**Source for input signals for binary signal selector switch 1** (output = B9482) i001 Source for control signal i002 Source for output signal when control signal = 0 i003 Source for output signal when control signal = 1 Settings: 0 = binector B0000 1 = binector B0001 etc.	**FB 250**	All binector numbers 1	Ind: 3 FS=0 Type: L2	P052 = 3 P051 = 40 Offline
U471 (2471) * S00 (B216)	**Source for input signals for binary signal selector switch 2** (output = B9483) As for U470	**FB 251**	All binector numbers 1	Ind: 3 FS=0 Type: L2	P052 = 3 P051 = 40 Offline

PNU	Description		Value range [Unit] Steps	No. indices Factory setting Type	See Change (Access / Status)
U472 (2472) * S00 (B216)	**Source for input signals for binary signal selector switch 3** (output = B9484) As for U470	**FB 252**	All binector numbers 1	Ind: 3 FS=0 Type: L2	P052 = 3 P051 = 40 Offline
U473 (2473) * S00 (B216)	**Source for input signals for binary signal selector switch 4** (output = B9485) As for U470	**FB 253**	All binector numbers 1	Ind: 3 FS=0 Type: L2	P052 = 3 P051 = 40 Offline
U474 (2474) * S00 (B216)	**Source for input signals for binary signal selector switch 5** (output = B9486) As for U470	**FB 254**	All binector numbers 1	Ind: 3 FS=0 Type: L2	P052 = 3 P051 = 40 Offline

11.66 Technology controller

Technology controller: Actual value					
U480 (2480) * S00 (B170)	**Source for actual value** Selection of connectors to be added as the actual value 0 = connector K0000 1 = connector K0001 etc.	**FB 114**	All connector numbers 1	Ind: 4 FS=0 Type: L2	P052 = 3 P051 = 40 Offline
U481 (2481) S00 FDS (B170)	**Filter time for actual value**	**FB 114**	0.00 to 600.00 [s] 0.01	Ind: 4 FS=0.00 Type: O2	P052 = 3 P051 = 40 Online
U482 (2482) S00 FDS (B170)	**Derivative-action time for actual value (D component)** 0.000 = D component deactivated See also U483	**FB 114**	0.000 to 30.000 [s] 0.001	Ind: 4 FS=0.000 Type: O2	P052 = 3 P051 = 40 Online
U483 (2483) * S00 FDS (B170)	**Factor for derivative-action time** 0 Derivative-action time = U482 * 1 1 Derivative-action time = U482 * 1000	**FB 114**	0 to 1 1	Ind: 4 FS=0 Type: O2	P052 = 3 P051 = 40 Offline

Technology controller: Setpoint					
U484 (2484) * S00 (B170)	**Source for setpoint** Selection of connectors to be added as the setpoint 0 = connector K0000 1 = connector K0001 etc.	**FB 114**	All connector numbers 1	Ind: 4 FS=0 Type: L2	P052 = 3 P051 = 40 Offline
U485 (2485) S00 FDS (B170)	**Injectable additional setpoint** This parameter setting is added to the setpoint when the binector selected in U486 changes to the log. "1" state	**FB 114**	-200.00 to 199.99 [%] 0.01	Ind: 4 FS=0.00 Type: I2	P052 = 3 P051 = 40 Online
U486 (2486) * S00 (B170)	**Source for control bit for injection of additional setpoint** 0 = binector B0000 1 = binector B0001 etc.	**FB 114**	All binector numbers 1	Ind: None FS=0 Type: L2	P052 = 3 P051 = 40 Offline
U487 (2487) S00 FDS (B170)	**Filter time for setpoint**	**FB 114**	0.00 to 600.00 [s] 0.01	Ind: 4 FS=0.00 Type: O2	P052 = 3 P051 = 40 Online

PNU	Description		Value range [Unit] Steps	No. indices Factory setting Type	See Change (Access / Status)
Technology controller: Controller parameters					
U488 (2488) S00 FDS (B170)	**P gain**	**FB 114**	0.10 to 200.00 0.01	Ind: 4 FS=3.00 Type: O2	P052 = 3 P051 = 40 Online
U489 (2489) * S00 (B170)	**Source for input quantity (x) for Kp adaptation** 0 = connector K0000 1 = connector K0001 etc.	**FB 114**	All connector numbers 1	Ind: None FS=0 Type: L2	P052 = 3 P051 = 40 Offline
U490 (2490) S00 FDS (B170)	**Characteristic for Kp adaptation: Threshold 1 (x1)**	**FB 114**	0.00 to 200.00 [%] 0.01	Ind: 4 FS=0.00 Type: O2	P052 = 3 P051 = 40 Online
U491 (2491) S00 FDS (B170)	**Characteristic for Kp adaptation: Threshold 2 (x2)**	**FB 114**	0.00 to 200.00 [%] 0.01	Ind: 4 FS=100.00 Type: O2	P052 = 3 P051 = 40 Online
U492 (2492) S00 FDS (B170)	**Characteristic for Kp adaptation: Minimum value (y1)** Minimum value of Kp factor (y) when x ≤ x1	**FB 114**	0.10 to 30.00 0.01	Ind: 4 FS=1.00 Type: O2	P052 = 3 P051 = 40 Online
U493 (2493) S00 FDS (B170)	**Characteristic for Kp adaptation: Maximum value (y2)** Maximum value of Kp factor (y) when x ≥ x2	**FB 114**	0.10 to 30.00 0.01	Ind: 4 FS=1.00 Type: O2	P052 = 3 P051 = 40 Online
U494 (2494) S00 FDS (B170)	**Reset time** See also U495	**FB 114**	0.010 to 60.000 [s] 0.001	Ind: 4 FS=3.000 Type: O2	P052 = 3 P051 = 40 Online
U495 (2495) * S00 FDS (B170)	**Factor for reset time** 0 Reset time = U494 * 1 1 Reset time = U494 * 1000	**FB 114**	0 to 1 1	Ind: 4 FS=0 Type: O2	P052 = 3 P051 = 40 Offline

Technology controller: Speed droop A parameterizable feedback loop can be connected in parallel to the I and P components of the technology controller (acts on summation point of setpoint and actual value). This loop can be activated and deactivated by settings in parameter U496 (loop can also be deactivated by setting U497 = 0).					
U496 (2496) * S00 (B170)	**Source for control bit for speed droop injection** 0 = binector B0000 1 = binector B0001 etc.	**FB 114**	All binector numbers 1	Ind: None FS=0 Type: L2	P052 = 3 P051 = 40 Offline
U497 (2497) S00 FDS (B170)	**Speed droop** Example: A 10% speed droop setting causes a 10% reduction in the setpoint at a 100% controller output ("softening" of closed-loop control).	**FB 114**	0.0 to 60.0 [%] 0.1	Ind: 4 FS=0.0 Type: O2	P052 = 3 P051 = 40 Online
U498 (2498) S00 FDS (B170)	**Positive limit for speed droop**	**FB 114**	0.00 to 199.99 [%] 0.01	Ind: 4 FS=100.00 Type: O2	P052 = 3 P051 = 40 Online
U499 (2499) S00 FDS (B170)	**Negative limit for speed droop**	**FB 114**	-200.00 to 0.00 [%] 0.01	Ind: 4 FS=-100.00 Type: I2	P052 = 3 P051 = 40 Online

PNU	Description	Value range [Unit] Steps	No. indices Factory setting Type	See Change (Access / Status)
Technology controller: Control bits				
U500 (2500) * S00 (B170)	**Source for technology controller enabling command** **FB 114** 0 = binector B0000 1 = binector B0001 etc.	All binector numbers 1	Ind: None FS=0 Type: L2	P052 = 3 P051 = 40 Offline
U502 (2502) * S00 FDS (B170)	**PI/PID controller switchover** **FB 114** 0 PI controller (D component is applied only in actual-value channel) 1 PID controller (D component is applied for control deviation)	0 to 1 1	Ind: 4 FS=0 Type: O2	P052 = 3 P051 = 40 Offline
U503 (2503) * S00 FDS (B170)	**Set P component to zero** **FB 114** 0 Set controller P component to zero (i.e. to obtain pure I controller) 1 Controller P component is active	0 to 1 1	Ind: 4 FS=1 Type: O2	P052 = 3 P051 = 40 Offline
U504 (2504) * S00 FDS (B170)	**Set I component to zero** **FB 114** 0 Set controller I component to zero (i.e. to obtain pure P controller) 1 Controller I component is active	0 to 1 1	Ind: 4 FS=1 Type: O2	P052 = 3 P051 = 40 Offline
Technology controller: Set I component When the state of the binector selected in U506 switches from log. "0" to "1", the I component of the technology controller is set to the value parameterized in U505. With this function it is possible, for example, to use the same signal (binector) to control controller enabling commands and setting of the I component.				
U505 (2505) * S00 (B170)	**Source for setting value for I component** **FB 114** 0 = connector K0000 1 = connector K0001 etc.	All connector numbers 1	Ind: None FS=0 Type: L2	P052 = 3 P051 = 40 Offline
U506 (2506) * S00 (B170)	**Source for control bit "Set I component"** **FB 114** 0 = binector B0000 1 = binector B0001 etc.	All binector numbers 1	Ind: None FS=0 Type: L2	P052 = 3 P051 = 40 Offline
Technology controller: Output, limitation				
U507 (2507) * S00 (B170)	**Source for variable positive limit** **FB 114** After multiplication with U508, the contents of the selected connector act as a positive limit for the technology controller output. 0 = connector K0000 1 = connector K0001 etc. Note: If the selected connector contains a negative value, a negative maximum value is applied to the output of this limiter stage.	All connector numbers 1	Ind: None FS=1 Type: L2	P052 = 3 P051 = 40 Offline
U508 (2508) S00 FDS (B170)	**Positive limit for technology controller output** **FB 114** See also U507	0.0 to 199.9 [%] 0.1	Ind: 4 FS=100.0 Type: O2	P052 = 3 P051 = 40 Online

PNU	Description	Value range [Unit] Steps	No. indices Factory setting Type	See Change (Access / Status)
U509 (2509) * S00 (B170)	**Source for variable negative limit** **FB 114** After multiplication with U510, the contents of the selected connector act as a negative limit for the technology controller output. 0 = connector K0000 1 = connector K0001 etc. Note: If the selected connector contains a positive value, a positive minimum value is applied to the output of this limiter stage. Note: Connector K9252 contains the positive limiting value with inverted sign generated by U507 and U508. By setting U509=9252 and U510=100.0, therefore, it is possible to set the negative and positive limits symmetrically.	All connector numbers 1	Ind: None FS=9252 Type: L2	P052 = 3 P051 = 40 Offline
U510 (2510) S00 FDS (B170)	**Negative limit for technology controller output** **FB 114** See also U509	0.0 to 199.9 [%] 0.1	Ind: 4 FS=100.0 Type: O2	P052 = 3 P051 = 40 Online
U511 (2511) * S00 (B170)	**Source for variable weighting factor for output** **FB 114** After multiplication with U512, the contents of the selected connector act as a weighting factor for the technology controller output. 0 = connector K0000 1 = connector K0001 etc.	All connector numbers 1	Ind: None FS=1 Type: L2	P052 = 3 P051 = 40 Offline
U512 (2512) S00 FDS (B170)	**Weighting factor for output** **FB 114** See also U511	-100.0 to 100.0 [%] 0.01	Ind: 4 FS=100.0 Type: I2	P052 = 3 P051 = 40 Online

11.67 Velocity/speed calculator

Speed/velocity calculator

Function: $v_act = \frac{D * \pi * n_rated}{i} * \frac{n_act}{100\%}$

v_act	Actual velocity	(n021, U521, K9256)
D	Diameter	(U517, U518)
n_rated	Rated speed	(U520)
i	Gear ratio	(U519)
n_act	Actual speed	(U515)

PNU	Description	Value range [Unit] Steps	No. indices Factory setting Type	See Change (Access / Status)
U515 (2515) * S00 (B190)	**Source for actual speed** **FB 115** 0 = connector K0000 1 = connector K0001 etc.	All connector numbers 1	Ind: None FS=0 Type: L2	P052 = 3 P051 = 40 Offline

Velocity/speed calculator

Function: $n_set = \frac{v_set * i}{D * \pi * n_rated} * 100\%$

n_set	Setpoint speed	(n023, K9257)
D	Diameter	(U517, U518, U523)
n_rated	Rated speed	(U520)
i	Gear ratio	(U519)
v_set	Setpoint velocity	(U516, U522)

PNU	Description	Value range [Unit] Steps	No. indices Factory setting Type	See Change (Access / Status)
U516 (2516) * S00 (B190)	**Source for set velocity** **FB 115** A value of 16384 in the selected connector is equivalent to the set velocity set in U522 0 = Connector K0000 1 = Connector K0001 etc.	All connector numbers 1	Ind: None FS=0 Type: L2	P052 = 3 P051 = 40 Offline

PNU	Description	Value range [Unit] Steps	No. indices Factory setting Type	See Change (Access / Status)
U517 (2517) * S00 (B190)	**Source for diameter** **FB 115** A value of 16384 in the selected connector is equivalent to the diameter set in U523 0 = Connector K0000 1 = Connector K0001 etc.	All connector numbers 1	Ind: None FS=0 Type: L2	P052 = 3 P051 = 40 Offline
U518 (2518) S00 FDS (B190)	**Minimum diameter** **FB 115** Lower limit for diameter set in U517	10.0 to 6553.5 [mm] 0.1	Ind: 4 FS=6500.0 Type: O2	P052 = 3 P051 = 40 Online
U519 (2519) S00 FDS (B190)	**Gear ratio (i)** **FB 115**	1.00 to 300.00 0.01	Ind: 4 FS=1.00 Type: O2	P052 = 3 P051 = 40 Online
U520 (2520) S00 FDS (B190)	**Rated speed (n_rated)** **FB 115**	100 to 4000 [rev/m] 1	Ind: 4 FS=1450 Type: O2	P052 = 3 P051 = 40 Online
U521 (2521) S00 (B190)	**Normalization for actual velocity** [SW 1.8 and later] 16384 in K9256 correspond to the actual velocity set here	0.01 to 327.67 [m/s] 0.01	Ind: None FS=16.38 Type: O2	P052 = 3 P051 = 40 Online
U522 (2522) S00 (B190)	**Normalization for set velocity** [SW 1.8 and later] See parameter U516	0.01 to 327.67 [m/s] 0.01	Ind: None FS=16.38 Type: O2	P052 = 3 P051 = 40 Online
U523 (2523) S00 (B190)	**Normalization for diameter** [SW 1.8 and later] See parameter U517	10 to 60000 [mm] 1	Ind: None FS=1638 Type: O2	P052 = 3 P051 = 40 Online

11.68 Variable moment of inertia

Calculation of the variable moment of inertia **FB 115**

Function: $J_V = \frac{D^4 - D_{Hülse}{}^4}{D_{max}{}^4} * K$

J_V	Variable moment of inertia
D	Diameter
$D_{Hülse}$	Diameter of the sleeve
D_{max}	Maximum diameter
K	Constant

U525 (2525) * S00 (B191)	**Source for input quantities** [SW 1.8 and later] 0 = Connector K0000 1 = Connector K0001 etc. i001 Diameter (16384 are equivalent to set diameter U526) i002 Diameter of the sleeve (16384 are equivalent to set diameter U527) i003 Maximum diameter (16384 are equivalent to set diameter U528) i004 Constant (16384 are equivalent to set factor U529)	All connector numbers 1	Ind: 4 FS=1 Type: L2	P052 = 3 P051 = 40 Offline
U526 (2526) S00 (B191)	**Normalization for diameter** [SW 1.8 and later] See parameter U525	10 to 60000 [mm] 1	Ind: None FS=10000 Type: O2	P052 = 3 P051 = 40 Online
U527 (2527) S00 (B191)	**Normalization for diameter of the sleeve** [SW 1.8 and later] See parameter U525	10 to 60000 [mm] 1	Ind: None FS=10000 Type: O2	P052 = 3 P051 = 40 Online

PNU	Description	Value range [Unit] Steps	No. indices Factory setting Type	See Change (Access / Status)
U528 (2528) S00 (B191)	**Normalization for maximum diameter** [SW 1.8 and later] See parameter U525	10 to 60000 [mm] 1	Ind: None FS=10000 Type: O2	P052 = 3 P051 = 40 Online
U529 (2529) S00 (B191)	**Normalization for constant K** [SW 1.8 and later] See parameter U525	0.01 to 100.00 0.01	Ind: None FS=1.00 Type: O2	P052 = 3 P051 = 40 Online

11.69 PI controller

PI controller 1 = FB260
PI controller 2 = FB261
PI controller 3 = FB262
PI controller 4 = FB263
PI controller 5 = FB264
PI controller 6 = FB265
PI controller 7 = FB266
PI controller 8 = FB267
PI controller 9 = FB268
PI controller 10 = FB269

U530 (2530) * S00 (B180... B189)	**Source for input quantity** [SW 1.8 and later] 0 = Connector K0000 1 = Connector K0001 etc. i001: input quantity PI controller 1 i002: input quantity PI controller 2 ... i010: input quantity PI controller 10	All connector numbers 1	Ind: 10 FS=0 Type: L2	P052 = 3 P051 = 40 Offline

Enable and setting of the PI controllers				
U531 (2531) * S00 (B180... B189)	**Source for control signals (enable PI controller)** [SW 1.8 and later] 0 = Binector B0000 1 = Binector B0001 etc. i001: 0 = Disable controller PI controller 1 i002: 0 = Disable controller PI controller 2 ... i010: 0 = Disable controller PI controller 10 i011: 1 = Freeze I component PI controller 1 i012: 1 = Freeze I component PI controller 2 ... i020: 1 = Freeze I component PI controller 10 i021: 1 = Freeze output PI controller 1 i022: 1 = Freeze output PI controller 2 ... i030: 1 = Freeze output PI controller 10 i031: 1 = Freeze I component in pos.direction PI controller 1 i032: 1 = Freeze I component in pos.direction PI controller 2 ... i040: 1 = Freeze I component in pos.direction PI controller 10 i041: 1 = Freeze I component in neg.direction PI controller 1 i042: 1 = Freeze I component in neg.direction PI controller 2 ... i050: 1 = Freeze I component in neg.direction PI controller 10	All binector numbers 1	Ind: 50 FS=0 Type: L2	P052 = 3 P051 = 40 Offline

PNU	Description	Value range [Unit] Steps	No. indices Factory setting Type	See Change (Access / Status)
U532 (2532) * S00 (B180... B189)	**Source for control signals (set PI controller)** [SW 1.8 and later] 0 = Binector B0000 1 = Binector B0001 etc. i001: 0 = Set I component PI controller 1 i002: 0 = Set I component PI controller 2 ... i010: 0 = Set I component PI controller 10 i011: 0 = Set output PI controller 1 i012: 0 = Set output PI controller 2 ... i020: 0 = Set output PI controller 10	All binector numbers 1	Ind: 20 FS=0 Type: L2	P052 = 3 P051 = 40 Offline
U533 (2533) * S00 (B180... B189)	**Source for Setting values** [SW 1.8 and later] 0 = Connector K0000 1 = Connector K0001 etc. i001: Setting value for I component PI controller 1 i002: Setting value for I component PI controller 2 ... i010: Setting value for I component PI controller 10 i011: Setting value for Output PI controller 1 i012: Setting value for Output PI controller 2 ... i020: Setting value for Output PI controller 10	All connector numbers 1	Ind: 20 FS=0 Type: L2	P052 = 3 P051 = 40 Offline
Filtering of the input signals				
U534 (2534) * S00 (B180... B189)	**Source for variable filtering time for the input signal** [SW 1.8 and later] The content of the selected connector acts as filtering time for the PI controller after multiplication with U535. 0 = Connector K0000 1 = Connector K0001 etc. i001: variable filtering time PI controller 1 i002: variable filtering time PI controller 2 ... i010: variable filtering time PI controller 10	All connector numbers 1	Ind: 10 FS=1 Type: L2	P052 = 3 P051 = 40 Offline
U535 (2535) S00 (B180... B189)	**Filtering time for the input signal** [SW 1.8 and later] i001: filtering time PI controller 1 i002: filtering time PI controller 2 ... i010: filtering time PI controller 10	0 to 10000 [ms] 1	Ind: 10 FS=0 Type: O2	P052 = 3 P051 = 40 Online
Controller parameters				
U536 (2536) * S00 (B180... B189)	**Source for variable P gain** [SW 1.8 and later] The content of the selected connector acts as the P gain for the PI controller after multiplication with U537. 0 = Connector K0000 1 = Connector K0001 etc. i001: variable P gain PI controller 1 i002: variable P gain PI controller 2 ... i010: variable P gain PI controller 10	All connector numbers 1	Ind: 10 FS=1 Type: L2	P052 = 3 P051 = 40 Offline
U537 (2537) S00 (B180... B189)	**PI controller P gain** [SW 1.8 and later] i001: P gain PI controller 1 i002: P gain PI controller 2 ... i010: P gain PI controller 10	0.10 to 200.00 0.01	Ind: 10 FS=3.00 Type: O2	P052 = 3 P051 = 40 Online

PNU	Description	Value range [Unit] Steps	No. indices Factory setting Type	See Change (Access / Status)
U538 (2538) * S00 (B180... B189)	**Source for variable Integration time** [SW 1.8 and later] The content of the selected connector acts as the integration time for the PI controller after multiplication with U539. 0 = Connector K0000 1 = Connector K0001 etc. i001: variable Integration time PI controller 1 i002: variable Integration time PI controller 2 ... i010: variable Integration time PI controller 10	All connector numbers 1	Ind: 10 FS=1 Type: L2	P052 = 3 P051 = 40 Offline
U539 (2539) S00 (B180... B189)	**PI controller integration time** [SW 1.8 and later] i001: Integration time PI controller 1 i002: Integration time PI controller 2 ... i010: Integration time PI controller 10	0.010 to 10.000 [s] 0.001	Ind: 10 FS=3.000 Type: O2	P052 = 3 P051 = 40 Online
Control bits				
U540 (2540) * S00 (B180... B189)	**Freeze P component** [SW 1.8 and later] 0 Controller P component frozen (i.e. pure I controller) 1 Controller P component active i001: PI controller 1 i002: PI controller 2 ... i010: PI controller 10	0 to 1 1	Ind: 10 FS=1 Type: O2	P052 = 3 P051 = 40 Offline
U541 (2541) * S00 (B180... B189)	**Freeze I component** [SW 1.8 and later] 0 Controller I component frozen (i.e. pure P controller) 1 Controller I component active i001: PI controller 1 i002: PI controller 2 ... i010: PI controller 10	0 to 1 1	Ind: 10 FS=1 Type: O2	P052 = 3 P051 = 40 Offline
Output, Limitation				
U542 (2542) * S00 (B180... B189)	**Source for variable positive limit** [SW 1.8 and later] The content of the selected connector acts as the positive limit for the output of the PI controller after multiplication with U543. 0 = Connector K0000 1 = Connector K0001 etc. i001: PI controller 1 i002: PI controller 2 ... i010: PI controller 10 Note: If the content of the selected connector has a negative value, this causes a negative maximum value at the output of this limiter stage.	All connector numbers 1	Ind: 10 FS=1 Type: L2	P052 = 3 P051 = 40 Offline
U543 (2543) S00 (B180... B189)	**Positive limit for the output of the PI controller** [SW 1.8 and later] See also U542	0.0 to 199.9 [%] 0.1	Ind: 10 FS=100.0 Type: O2	P052 = 3 P051 = 40 Online

PNU	Description	Value range [Unit] Steps	No. indices Factory setting Type	See Change (Access / Status)
U544 (2544) * S00 (B180... B189)	**Source for variable negative Limit** [SW 1.8 and later] The content of the selected connector acts as the negative limit for the output of the technology controller after multiplication with U510. 0 = Connector K0000 1 = Connector K0001 etc. i001: PI controller 1 i002: PI controller 2 ... i010: PI controller 10 Note: If the content of the selected connector has a positive value, this causes a positive minimum value at the output of this limiter stage. Note: Connectors K9306 to K9396 contain for PI controllers 1 to 10 the positive limitation values formed by U542 and U543 with an inverted sign. In this way it is possible to set the negative limitation symmetrically to the positive limitation by setting U544= 9306 to 9396 and U545=100.0.	All connector numbers 1	Ind: 10 FS= i001: 9306 i002: 9316 i003: 9326 i004: 9336 i005: 9346 i006: 9356 i007: 9366 i008: 9376 i009: 9386 i010: 9396 Type: L2	P052 = 3 P051 = 40 Offline
U545 (2545) S00 (B180... B189)	**Negative limit for the output of the PI controller** [SW 1.8 and later] See also U544	0.0 to 199.9 [%] 0.1	Ind: 10 FS=100.0 Type: O2	P052 = 3 P051 = 40 Online

11.70 Closed-loop control elements

Derivative / delay elements [SW 1.8 and later}					**FB 270 to FB 279**		
U550 (2550) * S00 (B156) (B157) (B158)	**Source for input quantity** [SW 1.8 and later] 0 = Connector K0000 1 = Connector K0001 etc.				All connector numbers 1	Ind: 10 FS=0 Type: L2	P052 = 3 P051 = 40 Offline
	i001:	Input quantity	derivative/delay element 1	(FB 270)			
	i002:	Input quantity	derivative/delay element 2	(FB 271)			
	i003:	Input quantity	derivative/delay element 3	(FB 272)			
	i004:	Input quantity	derivative/delay element 4	(FB 273)			
	i005:	Input quantity	derivative/delay element 5	(FB 274)			
	i006:	Input quantity	derivative/delay element 6	(FB 275)			
	i007:	Input quantity	derivative/delay element 7	(FB 276)			
	i008:	Input quantity	derivative/delay element 8	(FB 277)			
	i009:	Input quantity	derivative/delay element 9	(FB 278)			
	i010:	Input quantity	derivative/delay element 10	(FB 279)			
U551 (2551) * S00 (B156) (B157) (B158)	**Source for multiplier for derivative-action time** [SW 1.8 and later] 0 = Connector K0000 1 = Connector K0001 etc.				All connector numbers 1	Ind: 10 FS=1 Type: L2	P052 = 3 P051 = 40 Offline
	i001:	Multiplier	derivative/delay element 1	(FB 270)			
	i002:	Multiplier	derivative/delay element 2	(FB 271)			
	I003:	Multiplier	derivative/delay element 3	(FB 272)			
	i004:	Multiplier	derivative/delay element 4	(FB 273)			
	i005:	Multiplier	derivative/delay element 5	(FB 274)			
	i006:	Multiplier	derivative/delay element 6	(FB 275)			
	i007:	Multiplier	derivative/delay element 7	(FB 276)			
	i008:	Multiplier	derivative/delay element 8	(FB 277)			
	i009:	Multiplier	derivative/delay element 9	(FB 278)			
	i010:	Multiplier	derivative/delay element 10	(FB 279)			

PNU	Description	Value range [Unit] Steps	No. indices Factory setting Type	See Change (Access / Status)
U552 (2552) S00 (B156) (B157) (B158)	**Derivative-action time** [SW 1.8 and later] i001: Der.-act.time deriv./delay element 1 (FB 270) i002: Der.-act.time deriv./delay element 2 (FB 271) i003: Der.-act.time deriv./delay element 3 (FB 272) i004: Der.-act.time deriv./delay element 4 (FB 273) i005: Der.-act.time deriv./delay element 5 (FB 274) i006: Der.-act.time deriv./delay element 7 (FB 276) i008: Der.-act.time deriv./delay element 8 (FB 277) i009: Der.-act.time deriv./delay element 9 (FB 278) i010: Der.-act.time deriv./delay element 10 (FB 279)	0 to 10000 [ms] 1	Ind: 10 FS=100 Type: O2	P052 = 3 P051 = 40 Online
U553 (2553) * S00 (B156) (B157) (B158)	**Source for multiplier for filtering time** [SW 1.8 and later] 0 = Connector K0000 1 = Connector K0001 etc. i001: Multiplier derivative/delay element 1 (FB 270) i002: Multiplier derivative/delay element 2 (FB 271) i003: Multiplier derivative/delay element 3 (FB 272) i004: Multiplier derivative/delay element 4 (FB 273) i005: Multiplier derivative/delay element 5 (FB 274) i006: Multiplier derivative/delay element 6 (FB 275) i007: Multiplier derivative/delay element 7 (FB 276) i008: Multiplier derivative/delay element 8 (FB 277) i009: Multiplier derivative/delay element 9 (FB 278) i010: Multiplier derivative/delay element 10 (FB 279)	All connector numbers 1	Ind: 10 FS=1 Type: L2	P052 = 3 P051 = 40 Offline
U554 (2554) S00 (B156) (B157) (B158)	**Filtering time** [SW 1.8 and later] i001: Filtering time derivative/delay element 1 (FB 270) i002: Filtering time derivative/delay element 2 (FB 271) i003: Filtering time derivative/delay element 3 (FB 272) i004: Filtering time derivative/delay element 4 (FB 273) i005: Filtering time derivative/delay element 5 (FB 274) i006: Filtering time derivative/delay element 6 (FB 275) i007: Filtering time derivative/delay element 7 (FB 276) i008: Filtering time derivative/delay element 8 (FB 277) i009: Filtering time derivative/delay element 9 (FB 278) i010: Filtering time derivative/delay element 10 (FB 279)	0 to 10000 [ms] 1	Ind: 10 FS=100 Type: O2	P052 = 3 P051 = 40 Online

11.71 Control inputs, control outputs, setpoint reduction

n600 (2600) (G117)	**Display of status of control inputs** Representation on operator panel (PMU): 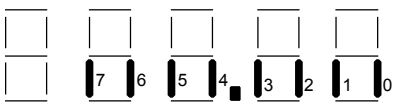 Segment ON: corresponding terminal is activated Segment OFF: corresponding terminal is not activated Segment or bit 0 ..... Terminal 72 1 ..... Terminal 73 2 ..... Terminal 74 3 ..... Terminal 75 4 ..... Terminal 76 5 ..... Terminal 77 6 ..... Terminal 78 7 ..... Terminal 79		Ind: None Type: V2	P052 = 3

U605 (2605) * (G160)	**Source for zero delay-angle command** 0 = binector B0000 1 = binector B0001 etc.	All binector numbers 1	Ind: None FS=9368 Type: L2	P052 = 3 P051 = 40 Offline

PNU	Description	Value range [Unit] Steps	No. indices Factory setting Type	See Change (Access / Status)
Setpoint reduction				
U607 (2607) * BDS (G135)	**Source for activation of the setpoint reduction** 0 = Binector B0000 1 = Binector B0001 etc. 0 Setpoint reduction active The Setpoint (before the ramp-function generator) is multiplied by the factor set in parameter U608 1 No setpoint reduction	All binector numbers 1	Ind: 2 FS=9382 Type: L2	P052 = 3 P051 = 40 Offline
U608 (2608) FDS (G135)	**Multiplier for speed setpoint when setpoint reduction is activated**	0.00 to 100.00 [%] 0.01%	Ind: 4 FS=15.00 Type: O2	P052 = 3 P051 = 40 Online
U614 (2614) (G160)	**Ramp-up time for setpoint with zero delay-angle**	0 to 1000 [ms] 1ms	Ind: None FS=100 Type: O2	P052 = 3 P051 = 40 Online
U617 (2617) (G135)	**Enable terminal 37** 0 terminal 37 inactive 1 terminal 37 active	0 to 1 1	Ind: None FS=0 Type: O2	P052 = 3 P051 = 40 Online
U618 (2618) (G180)	**Enable terminal 38** 0 terminal 38 inactive 1 terminal 38 active	0 to 1 1	Ind: None FS=0 Type: O2	P052 = 3 P051 = 40 Online
U619 (2619) * BDS (G112)	**Source for "No fault" signal (terminals 109/110)** 0 = binector B0000 1 = binector B0001 etc.	All binector numbers 1	Ind: 2 FS=107 Type: L2	P052 = 3 P051 = 40 Offline
n620 (2620) (G119)	**Display of status of control outputs** Representation on operator panel (PMU): 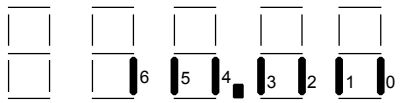 Segment ON: corresponding terminal is activated (relay contact closed) Segment OFF: corresponding terminal is not activated (relay contact open) Segment or bit 0 .... "No fault" signal (terminal 81/82) 1 .... Acknowledgement signal (terminal 83/84) 2 .... Brake contactor (terminal 85/86) 3 .... Rotor contactor stage 1 (terminal 87/88) 4 ..... Rotor contactor stage 2 (terminal 89/90) 5 ..... Rotor contactor stage 3 (terminal 91/92) 6 ..... Rotor contactor stage 4 (terminal 93/94)		Ind: None Type: V2	P052 = 3
U621 (2621) * BDS (G119)	**Source for "No fault" signal (terminals 81/82)** 0 = binector B0000 1 = binector B0001 etc.	All binector numbers 1	Ind: 2 FS=107 Type: L2	P052 = 3 P051 = 40 Offline
U622 (2622) * BDS (G119)	**Source for acknowledgement signal (terminals 83/84)** 0 = binector B0000 1 = binector B0001 etc.	All binector numbers 1	Ind: 2 FS=9367 Type: L2	P052 = 3 P051 = 40 Offline
U623 (2623) * BDS (G119)	**Source for brake contactor (terminals 85/86)** 0 = binector B0000 1 = binector B0001 etc.	All binector numbers 1	Ind: 2 FS=9361 Type: L2	P052 = 3 P051 = 40 Offline

PNU	Description	Value range [Unit] Steps	No. indices Factory setting Type	See Change (Access / Status)
U627 (2627) FDS (G119)	**Filter time for actual speed value for switch over of rotor stages**	0 to 10000 [ms] 1ms	Ind: 4 FS=0 Type: O2	P052 = 3 P051 = 40 Online
U628 (2628) FDS (G136) (G160)	**Threshold for "Setpoint in the controlled range" signal**	10.0 to 199.9 [%] 0.1%	Ind: 4 FS=-55.0 Type: O2	P052 = 3 P051 = 40 Online
U629 (2629) FDS (G136)	**Hysteresis for "Setpoint in the controlled range" signal**	0.1 to 10.0 [%] 0.1%	Ind: 4 FS=5.0 Type: O2	P052 = 3 P051 = 40 Online

11.72 Rotor stage stepping

U630 (2630) FDS (G119)	**Setpoint for premature switch over to controlled torque characteristic – MI**	0.0 to -100.0 [%] 0.1%	Ind: 4 FS=-1.0 Type: I2	P052 = 3 P051 = 40 Online
U631 (2631) FDS (G119)	**Hysteresis for premature switch over to controlled torque characteristic – MI**	0.1 to 10.0 [%] 0.1%	Ind: 4 FS=5.0 Type: O2	P052 = 3 P051 = 40 Online
U632 (2632) FDS (G119)	**Setpoint for premature switch over to controlled torque characteristic – MII**	0.0 to 100.0 [%] 0.1%	Ind: 4 FS=1.0 Type: O2	P052 = 3 P051 = 40 Online
U633 (2633) FDS (G119)	**Hysteresis for premature switch over to controlled torque characteristic – MII**	0.1 to 10.0 [%] 0.1%	Ind: 4 FS=5.0 Type: O2	P052 = 3 P051 = 40 Online
U634 (2634) FDS (G119)	**Threshold for switch over to rotor contactor stage 2** Switching of rotor contactor 2 when specified actual speed value reaches the controlled range	10.0 to 100.0 [%] 0.1%	Ind: 4 FS=50.0 Type: O2	P052 = 3 P051 = 40 Online
U635 (2635) FDS (G119)	**Hysteresis for switch over to rotor contactor stage 2**	0.1 to 50.0 [%] 0.1%	Ind: 4 FS=5.0 Type: O2	P052 = 3 P051 = 40 Online
U636 (2636) FDS (G119)	**Threshold for switch over to rotor contactor stage 3** Switching of rotor contactor 3 when specified actual speed value reaches the controlled range	10.0 to 100.0 [%] 0.1%	Ind: 4 FS=75.0 Type: O2	P052 = 3 P051 = 40 Online
U637 (2637) FDS (G119)	**Hysteresis for switch over to rotor contactor stage 3**	0.1 to 50.0 [%] 0.1%	Ind: 4 FS=5.0 Type: O2	P052 = 3 P051 = 40 Online
U638 (2638) FDS (G119)	**Threshold for switch over to rotor contactor stage 4** Switching of rotor contactor 4 when specified actual speed value reaches the controlled range	10.0 to 100.0 [%] 0.1%	Ind: 4 FS=90.0 Type: O2	P052 = 3 P051 = 40 Online
U639 (2639) FDS (G119)	**Hysteresis for switch over to rotor contactor stage 4**	0.1 to 50.0 [%] 0.1%	Ind: 4 FS=5.0 Type: O2	P052 = 3 P051 = 40 Online

PNU	Description	Value range [Unit] Steps	No. indices Factory setting Type	See Change (Access / Status)
U640 (2640)	**Wait period when switching rotor contactors** i 001: Pick-up time of rotor contactors i 002: Drop-out time of rotor contactors i 003: Pick-up time of rotor contactors (see header for parameter U641 ff.) Off-load switching is recommended to increase the service life of the rotor contactors. A disadvantage of off-load switching of rotor contactors: there is a torque-free interval, and this may lead to a deviation in the speed. Whenever a rotor contactor is switched in, the firing pulses are disabled for the time set at index 001 (zero current interval). Whenever a rotor contactor is switched out, the firing pulses are disabled for the time set at index 002 (zero current interval).	0 to 2000 [ms] 1ms	Ind: 3 FS= i001: 0 i002: 0 i003: 50 Type: O2	P052 = 3 P051 = 40 Online

Preventing current peaks during rotor stage stepping:

To prevent excessive stator current values occurring when switching in the next rotor contactor, it is desirable, at the same time as the contactor is switched in (delayed by the time set at U640 index 003), to reduce the I component of the speed controller by roughly the same proportion by which the rotor resistance is also reduced.

U641 (2641) FDS	**Factor for I component n controller with rotor stage 1** R (stage 1) / R (counter-torque stage)	0.0 to 100.0 [%] 0.1%	Ind: 4 FS=50.0 Type: O2	P052 = 3 P051 = 40 Online
U642 (2642) FDS	**Factor for I component n controller with rotor stage 2** R (stage 2) / R (stage 1)	0.0 to 100.0 [%] 0.1%	Ind: 4 FS=50.0 Type: O2	P052 = 3 P051 = 40 Online
U643 (2643) FDS	**Factor for I component n controller with rotor stage 3** R (stage 3) / R (stage 2)	0.0 to 100.0 [%] 0.1%	Ind: 4 FS=50.0 Type: O2	P052 = 3 P051 = 40 Online
U644 (2644) FDS	**Factor for I component n controller with rotor stage 4** R (stage 4) / R (stage 4)	0.0 to 100.0 [%] 0.1%	Ind: 4 FS=50.0 Type: O2	P052 = 3 P051 = 40 Online

U645 (2645) FDS (G151)	**Factor for P component n controller with counter-torque operation** effective P gain for speed controller with counter-torque operation = P225 * U645	1 to 1000 [%] 1%	Ind: 4 FS=100 Type: O2	P052 = 3 P051 = 40 Online
U646 (2646) FDS (G151)	**Factor for P component n controller with rotor stage 1** effective P gain for speed controller with rotor stage 1 = P225 * U646	1 to 1000 [%] 1%	Ind: 4 FS=100 Type: O2	P052 = 3 P051 = 40 Online
U647 (2647) FDS (G151)	**Factor for P component n controller with rotor stage 2** effective P gain for speed controller with rotor stage 2 = P225 * U647	1 to 1000 [%] 1%	Ind: 4 FS=100 Type: O2	P052 = 3 P051 = 40 Online
U648 (2648) FDS (G151)	**Factor for P component n controller with rotor stage 3** effective P gain for speed controller with rotor stage 3 = P225 * U648	1 to 1000 [%] 1%	Ind: 4 FS=100 Type: O2	P052 = 3 P051 = 40 Online
U649 (2649) FDS (G151)	**Factor for P component n controller with rotor stage 4** effective P gain for speed controller with rotor stage 4 = P225 * U649	1 to 1000 [%] 1%	Ind: 4 FS=100 Type: O2	P052 = 3 P051 = 40 Online

11.73 Start pulse, speed controller

(see also Section 8, Sheet G150)

U651 (2651) FDS (G150)	**Start pulse** (integrator setting value for the speed controller)	-100.00 to 100.00 [%] 0.01%	Ind: 4 FS=0.00 Type: I2	P052 = 3 P051 = 40 Online
U652 (2652) FDS (G150)	**Multiplier for start pulse when lowering** when start pulse as in U651 is also used for a positive setpoint (lowering)	0.00 to 100.00 [%] 0.01%	Ind: 4 FS=50.00 Type: O2	P052 = 3 P051 = 40 Online

PNU	Description	Value range [Unit] Steps	No. indices Factory setting Type	See Change (Access / Status)
U653 (2653) FDS (G150)	**Start pulse lowering**	-100.00 to 100.00 [%] 0.01%	Ind: 4 FS=0.00 Type: I2	P052 = 3 P051 = 40 Online
U655 (2655) * (G150)	**Source for start pulse** 0 = connector K0000 1 = connector K0001 etc.	All connector numbers 1	Ind: None FS=451 Type: L2	P052 = 3 P051 = 40 Offline
U656 (2656) * (G150)	**Source for start pulse lowering** 0 = connector K0000 1 = connector K0001 etc.	All connector numbers 1	Ind: None FS=452 Type: L2	P052 = 3 P051 = 40 Offline
U657 (2657) * BDS (G150)	**Source for switch over of start pulse lifting/lowering** 0 = binector B0000 1 = binector B0001 etc.	All binector numbers 1	Ind: 2 FS=9064 Type: L2	P052 = 3 P051 = 40 Offline

11.74 Evaluation of a four-stage master switch

(see also Section 8, Sheet G125)

U660 (2660) * (G125)	**Source for travel command 1** 0 = binector B0000 1 = binector B0001 etc.	All binector numbers 1	Ind: None FS=9063 Type: L2	P052 = 3 P051 = 40 Offline
U661 (2661) * (G125)	**Source for travel command 2** 0 = binector B0000 1 = binector B0001 etc.	All binector numbers 1	Ind: None FS=9064 Type: L2	P052 = 3 P051 = 40 Offline
U662 (2662) * (G125)	**Source for switch over to setpoint stage S2** 0 = binector B0000 1 = binector B0001 etc.	All binector numbers 1	Ind: None FS=18 Type: L2	P052 = 3 P051 = 40 Offline
U663 (2663) * (G125)	**Source for switch over to setpoint stage S3** 0 = binector B0000 1 = binector B0001 etc.	All binector numbers 1	Ind: None FS=20 Type: L2	P052 = 3 P051 = 40 Offline
U664 (2664) * (G125)	**Source for switch over to setpoint stage S4** 0 = binector B0000 1 = binector B0001 etc.	All binector numbers 1	Ind: None FS=9083 Type: L2	P052 = 3 P051 = 40 Offline
U665 (2665) (G125)	**Setpoint for setpoint stage S1**	0.00 to 110.00 [%] 0.01%	Ind: None FS=10.00 Type: O2	P052 = 3 P051 = 40 Online
U666 (2666) (G125)	**Setpoint for setpoint stage S2**	0.00 to 110.00 [%] 0.01%	Ind: None FS=25.00 Type: O2	P052 = 3 P051 = 40 Online
U667 (2667) (G125)	**Setpoint for setpoint stage S3**	0.00 to 110.00 [%] 0.01%	Ind: None FS=40.00 Type: O2	P052 = 3 P051 = 40 Online
U668 (2668) (G125)	**Setpoint for setpoint stage S4**	0.00 to 110.00 [%] 0.01%	Ind: None FS=100.00 Type: O2	P052 = 3 P051 = 40 Online

PNU	Description	Value range [Unit] Steps	No. indices Factory setting Type	See Change (Access / Status)

11.75 Position/positional deviation acquisition

U670 (2670) * S00 (B152)	**Source for actual position values** **FB 54** [SW 2.0 and later] Selection of connector whose values are to be used as actual position values. i001: Actual position value 1 i002: Actual position value 2 Settings: 0 = Connector K0000 1 = Connector K0001 etc.	All connector numbers 1	Ind: 2 FS= i001: 46 i002: 0 Type: L2	P052 = 2 P051 = 40 Offline
U671 (2671) * S00 (B152)	**Source for setting/resetting signal for position acquisition** **FB 54** [SW 2.0 and later] Selection of binector whose value is to be used as the setting or resetting signals. i001: Reset actual position value 1 i002: Set actual position value 1 i003: Reset actual position value 2 i004: Set actual position value 2 i005: Reset positional deviation i006: Set positional deviation Settings: 0 = Binector B0000 1 = Binector B0001 etc.	All binector numbers 1	Ind: 6 FS=0 Type: L2	P052 = 2 P051 = 40 Offline
U672 (2672) * S00 (B152)	**Source for setting values** **FB 54** [SW 2.0 and later] Selection of connectors whose values are to be used as setting values i001: Setting value for position 1 i002: Setting value for position 2 i003: Setting value for positional deviation Settings: 0 = Connector K0000 1 = Connector K0001 etc.	All connector numbers 1	Ind: 3 FS= i001: 9471 i002: 9472 i003: 9473 Type: L2	P052 = 2 P051 = 40 Offline
U673 (2673) * FDS S00 (B152)	**Numerator of transformation ratio for actual position value 2** **FB 54** [SW 2.0 and later] U673 must be less than or equal to U674, otherwise F058 is output with fault value 14	-32766 to 32766 1	Ind: 4 FS=10000 Type: I2	P052 = 2 P051 = 40 Offline
U674 (2674) * FDS S00 (B152)	**Denominator of transformation ratio for actual position value 2** **FB 54** [SW 2.0 and later]	1 to 32767 1	Ind: 4 FS=10000 Type: O2	P052 = 2 P051 = 40 Offline
U675 (2675) * S00 (B152)	**Source for connecting the positional deviation offset** **FB 54** [SW 2.0 and later] Selection of the binector whose value connects the offset of the positional deviation Settings: 0 = Binector B0000 1 = Binector B0001 etc.	All binector numbers 1	Ind: none FS=0 Type: L2	P052 = 2 P051 = 40 Offline

PNU	Description	Value range [Unit] Steps	No. indices Factory setting Type	See Change (Access / Status)
U676 (2676) * S00 (B152)	**Source for positional deviation offset** **FB 54** [SW 2.0 and later] Selection of the connector whose value is to be used as the offset of the positional deviation Settings: 0 = Connector K0000 1 = Connector K0001 etc.	All connector numbers 1	Ind: none FS=9474 Type: L2	P052 = 2 P051 = 40 Offline
U677 (2677) * S00 (B152)	**Fixed values for position acquisition** **FB 54** [SW 2.0 and later] i001: LOW word of double-word connector KK9471 i002: HIGH word of double-word connector KK9471 i003: LOW word of double-word connector KK9472 i004: HIGH word of double-word connector KK9472 i005: LOW word of double-word connector KK9473 i006: HIGH word of double-word connector KK9473 i007: LOW word of double-word connector KK9474 i008: HIGH word of double-word connector KK9474	-32768 to 32767 1	Ind: 8 FS=0 Type: I2	P052 = 2 P051 = 40 Offline
U678 (2678) * S00 (B152)	**Memory for actual position values: Initial value at POWER ON** **FB 54** [SW 2.1 and later] 0 Initial value = 0 1 Initial value is set such that on POWER ON KK9481 or KK9482 assumes whatever its setting value was before the electronics supply was disconnected.	0 to 1 1	Ind: none FS=0 Type: O2	P052 = 2 P051 = 40 online

11.76 Root extractor

U680 (2680) * S00 (B153)	**Source for the input of the root extractor** **FB 58** [SW 2.0 and later] Selection of the connector whose value is to be used for the root extractor input. Settings: 0 = Connector K0000 1 = Connector K0001 etc.	All connector numbers 1	Ind: none FS=9483 Type: L2	P052 = 2 P051 = 40 Offline
U681 (2681) S00 (B153)	**Operating point for limit monitoring indicator of the root extractor** **FB 58** [SW 2.0 and later] applied to connector KK9483	1 to 65535 1	Ind: none FS=1 Type: O2	P052 = 2 P051 = 40 Online
U682 (2682) S00 (B153)	**Hysteresis for limit monitoring indicator of the root extractor** **FB 58** [SW 2.0 and later]	1 to 65535 1	Ind: none FS=1 Type: O2	P052 = 2 P051 = 40 Online
U683 (2683) S00 (B153)	**x value for root function and gradient** **FB 58** [SW 2.0 and later] Definition of input values i001: Distance between input value of root function and fictitious passage through zero for y value U684.001 i002: x value of gradient for y value U684.002	1 to 65535 1	Ind: 2 FS=1000 Type: O2	P052 = 2 P051 = 40 Online
U684 (2684) S00 (B153)	**y value for root function and gradient** **FB 58** [SW 2.0 and later] Definition of output values i001: y value of root function for distance U683.001 i002: y value of gradient for x value U683.002	0.01 to 199.99 [%] 0.01	Ind: 2 FS=100.00 Type: O2	P052 = 2 P051 = 40 Online

PNU	Description	Value range [Unit] Steps	No. indices Factory setting Type	See Change (Access / Status)

11.77 Configuration of SCB1 with SCI

U690 (2690) (Z150) (Z151)	**Configuration of analog inputs of SCI1** [SW 1.9 and later] Definition of type of input signals Parameter value / Terminals X428/3, 6, 9 / Terminals X428/5, 8, 11 0: -10 V ... + 10 V / - 20 mA ... + 20 mA 1: 0 V ... + 10 V / 0 mA ... + 20 mA 2: / 4 mA ... + 20 mA Notes: - Only one signal can be processed per input. Voltage or current signals can be evaluated. - Voltage and current signals must be connected to different terminals. - Only unipolar signals are permitted with settings 1 and 2, i.e. the internal process quantities are also unipolar. - When setting 2 is selected, an input current of < 2 mA causes shutdown on faults (open-circuit monitoring) - The offset compensation for the analog inputs is set in parameter U692. i001: Slave 1, analog input 1 i002: Slave 1, analog input 2 i003: Slave 1, analog input 3 i004: Slave 2, analog input 1 i005: Slave 2, analog input 2 i006: Slave 2, analog input 3	0 to 2 1	Ind:6 FS= 0 Type O2	P052 = 3 P051 =40 Online
U691 (2691) (Z150) (Z151)	**Smoothing time constant for analog inputs of SCI1** [SW 1.9 and later] Formula: T = 2ms * 2 to the power of U691 i001: Slave 1, analog input 1 i002: Slave 1, analog input 2 i003: Slave 1, analog input 3 i004: Slave 2, analog input 1 i005: Slave 2, analog input 2 i006: Slave 2, analog input 3	0 to 15 1	Ind:6 FS= 2 Type O2	P052 = 3 P051 =40 Online
U692 (2692) (Z150) (Z151)	**Offset compensation for analog inputs of SCI1** [SW 1.9 and later] Setting instructions, see Operating Instructions for SCI1 i001: Slave 1, analog input 1 i002: Slave 1, analog input 2 i003: Slave 1, analog input 3 i004: Slave 2, analog input 1 i005: Slave 2, analog input 2 i006: Slave 2, analog input 3	-20.00 to 20.00 [V] 0.01V	Ind:6 FS= 0 Type I2	P052 = 3 P051 =40 Online
U693 (2693) (Z155) (Z156)	**Actual value output via analog outputs of SCI1** [SW 1.9 and later] Selection of connectors whose values are to be output (for details, see Operating Instructions for SCI1) i001: Slave 1, analog output 1 i002: Slave 1, analog output 2 i003: Slave 1, analog output 3 i004: Slave 2, analog output 1 i005: Slave 2, analog output 2 i006: Slave 2, analog output 3	All connector numbers 1	Ind:6 FS= 0 Type L2	P052 = 3 P051 =40 Online
U694 (2694) (Z155) (Z156)	**Gain for analog outputs of SCI1** [SW 1.9 and later] Setting instructions, see Operating Instructions for SCI1 i001: Slave 1, analog output 1 i002: Slave 1, analog output 2 i003: Slave 1, analog output 3 i004: Slave 2, analog output 1 i005: Slave 2, analog output 2 i006: Slave 2, analog output 3	-320.00 to 320.00 [V] 0.01V	Ind:6 FS= 10.00 Type I2	P052 = 3 P051 =40 Online

PNU	Description	Value range [Unit] Steps	No. indices Factory setting Type	See Change (Access / Status)
U695 (2695) (Z155) (Z156)	**Offset compensation for analog outputs of SCI1** [SW 1.9 and later] Setting instructions, see Operating Instructions for SCI1 i001: Slave 1, analog output 1 i002: Slave 1, analog output 2 i003: Slave 1, analog output 3 i004: Slave 2, analog output 1 i005: Slave 2, analog output 2 i006: Slave 2, analog output 3	-100.00 to 100.00 [V] 0.01V	Ind:6 FS= 0 Type I2	P052 = 3 P051 =40 Online
U696 (2696)	**Telegram failure time for SCB1** [SW 1.9 and later] Fault message F079 is displayed if no process data are exchanged with the supplementary board within this delay period. The monitoring function is implemented within a 20 ms cycle. For this reason, only setting values which constitute a multiple of 20 ms are meaningful. Settings: 0 No time monitoring 1...65000 Permissible time interval between two process data exchange operations before a fault message is output. Note: The telegram monitoring function is active • from the receipt of the first error-free telegram after connection of the electronics power supply • from the receipt of the first error-free telegram after the telegram monitor has responded (i.e. monitoring timeout).	0 to 65000 [ms] 1ms	Ind: None FS=0 Type: O2	P052 = 3 P051 =40 Online
n697 (2697)	**Diagnostic information of SCB1** [SW 1.9 and later] Visualization parameter for displaying diagnostic info relating to SCB1. The displayed values overflow at "255“ (e.g. the number of telegrams begins at "0" again after "255"). i001: Number of error-free telegrams i002: Number of errored telegrams i003: Number of voltage failures on slaves i004: Number of interruptions in fiber-optic connection i005: Number of missing response telegrams i006: Number of search telegrams for slave location i007: ETX error i008: Number of configuration telegrams i009: Highest terminal numbers needed according to PZD connection (parameterization of connectors or binectors) i010: Analog inputs/outputs required according to PZD connection of setpoint channel and actual value output via SCI (parameterization of appropriate connectors) i011: Reserved i012: Reserved i013: SCB1 alarm word i014: Setting defining whether slave no. 1 is needed and type if applicable 0: No slave required 1: SCI1 2: SCI2 i015: Setting defining whether slave no. 2 is needed and type if applicable 0: No slave required 1: SCI1 2: SCI2 i016: SCI board: Initialization error i017: SCB1 generation: Year i018: SCB1 generation: Day and month i019: SCI slave1: Software version i020: SCI slave1: Year of generation i021: SCI slave1: Day and month of generation i022: SCI slave2: Software version i023: SCI slave2: Year of generation i024: SCI slave2: Day and month of generation		Ind:24 Type O2	P052 = 3 P051 =40 Online

PNU	Description	Value range [Unit] Steps	No. indices Factory setting Type	See Change (Access / Status)
U698 (2698) (Z135) (Z136) (Z145) (Z146)	**Binector selection for binary outputs of SCI** [SW 1.9 and later] Selection of binectors whose states are output via the binary outputs of the SCIs i001: Binector selection for SCI slave1, binary output 1 i002: Binector selection for SCI slave1, binary output 2 i003: Binector selection for SCI slave1, binary output 3 i004: Binector selection for SCI slave1, binary output 4 i005: Binector selection for SCI slave1, binary output 5 i006: Binector selection for SCI slave1, binary output 6 i007: Binector selection for SCI slave1, binary output 7 i008: Binector selection for SCI slave1, binary output 8 i009: Binector selection for SCI slave1, binary output 9 i010: Binector selection for SCI slave1, binary output 10 i011: Binector selection for SCI slave1, binary output 11 i012: Binector selection for SCI slave1, binary output12 i013: Binector selection for SCI slave2, binary output 1 i014: Binector selection for SCI slave2, binary output 2 i015: Binector selection for SCI slave2, binary output 3 i016: Binector selection for SCI slave2, binary output 4 i017: Binector selection for SCI slave2, binary output 5 i018: Binector selection for SCI slave2, binary output 6 i019: Binector selection for SCI slave2, binary output 7 i020: Binector selection for SCI slave2, binary output 8 i021: Binector selection for SCI slave2, binary output 9 i022: Binector selection for SCI slave2, binary output 10 i023: Binector selection for SCI slave2, binary output 11 i024: Binector selection for SCI slave2, binary output12	All binector numbers 1	Ind:24 FS= 0 Type L2	P052 = 3 P051 =40 Online
n699 (2699) (Z130) (Z131) (Z135) (Z136) (Z140) (Z141) (Z145) (Z146) (Z150) (Z151) (Z155) (Z156)	**Display of SCB1/SCI process data** [SW 1.9 and later] All values in hexadecimal representation i001: SCI slave1, binary inputs i002: SCI slave1, analog input1 i003: SCI slave1, analog input2 i004: SCI slave1, analog input3 i005: SCI slave2, binary inputs i006: SCI slave2, analog input1 i007: SCI slave2, analog input2 i008: SCI slave2, analog input3 i009: SCI slave1, binary outputs i010: SCI slave1, analog output1 i011: SCI slave1, analog output2 i012: SCI slave1, analog output3 i013: SCI slave2, binary outputs i014: SCI slave2, binary outputs i015: SCI slave2, analog output2 i016: SCI slave2, analog output3		Ind:16 Type L2	P052 = 3 P051 =40 Online

11.78 Configuration of supplementary boards in board locations 2 and 3

U710 (2710) * (Z110) (Z111)	**Initialize link to supplementary boards** i001 Initialization of 1st communications board (in slot with lower ID letter) i002 Initialization of 2nd communications board (in slot with higher ID letter Settings: 0 The link to supplementary boards is re-initialized. After the configuration parameters for supplementary boards have been changed, U710 must be set to 0 so that the new settings can take effect. The parameter is then set automatically to 1. Note: Data transmission is interrupted while initialization is in progress. 1 Deactivated	0 to 1 1	Ind: 2 FS=1 Type: O2	P052 = 3 P051 = 40 Offline

PNU	Description	Value range [Unit] Steps	No. indices Factory setting Type	See Change (Access / Status)
U711 (2711) * (Z110) (Z111)	**Communications board parameter 1 (CB parameter 1)** See documentation for installed COM BOARD. This parameter is relevant only if a communications board is installed. The validity of the setting is monitored by the CB. If the CB rejects the setting, fault message F080 is displayed with fault value 5 Index 1 is used to parameterize the 1st CB (including CB behind TB) and index 2 to parameterize the 2nd CB.	0 to 65535 1	Ind: 2 FS=0 Type: O2	P052 = 3 Online
U712 (2712) * (Z110) (Z111)	**Communications board parameter 2 (CB parameter 2)** See U711	0 to 65535 1	Ind: 2 FS=0 Type: O2	P052 = 3 Online
U713 (2713) * (Z110) (Z111)	**Communications board parameter 3 (CB parameter 3)** See U711	0 to 65535 1	Ind: 2 FS=0 Type: O2	P052 = 3 Online
U714 (2714) * (Z110) (Z111)	**Communications board parameter 4 (CB parameter 4)** See U711	0 to 65535 1	Ind: 2 FS=0 Type: O2	P052 = 3 Online
U715 (2715) * (Z110) (Z111)	**Communications board parameter 5 (CB parameter 5)** See U711	0 to 65535 1	Ind: 2 FS=0 Type: O2	P052 = 3 Online
U716 (2716) * (Z110) (Z111)	**Communications board parameter 6 (CB parameter 6)** See U711	0 to 65535 1	Ind: 2 FS=0 Type: O2	P052 = 3 Online
U717 (2717) * (Z110) (Z111)	**Communications board parameter 7 (CB parameter 7)** See U711	0 to 65535 1	Ind: 2 FS=0 Type: O2	P052 = 3 Online
U718 (2718) * (Z110) (Z111)	**Communications board parameter 8 (CB parameter 8)** See U711	0 to 65535 1	Ind: 2 FS=0 Type: O2	P052 = 3 Online
U719 (2719) * (Z110) (Z111)	**Communications board parameter 9 (CB parameter 9)** See U711	0 to 65535 1	Ind: 2 FS=0 Type: O2	P052 = 3 Online
U720 (2720) * (Z110) (Z111)	**Communications board parameter 10 (CB parameter 10)** See U711	0 to 65535 1	Ind: 2 FS=0 Type: O2	P052 = 3 Online
U721 (2721) * (Z110) (Z111)	**Communications board parameter 11 (CB parameter 11)** See U711	0 to 65535 1	Ind: 10 FS=0 Type: O2	P052 = 3 Online

PNU	Description	Value range [Unit] Steps	No. indices Factory setting Type	See Change (Access / Status)
U722 (2722) * (Z110) (Z111)	**Telegram failure time for CB and TB** i001: Telegram failure time for board location 2 i002: Telegram failure time for board location 3 i003: Fault delay time for 1st CB or TB i004: Fault delay time for 2nd CB Settings for telegram failure time: 0 No time monitoring; must be parameterized for sporadic (acyclic) telegrams 1...65500 Maximum permissible time interval between 2 data exchanges before fault message F082 can be output Settings for fault delay time: 0 Instantaneous activation of F082 1...65499 Fault delay time before F082 is activated. 65500 F082 is never activated If no process data are exchanged with the supplementary board for a period in excess of the telegram failure time, fault message F082 is activated as a function of the fault delay time. Monitoring takes place in a 20 ms cycle. For this reason, it is only meaningful to set values that are multiples of 20 ms. 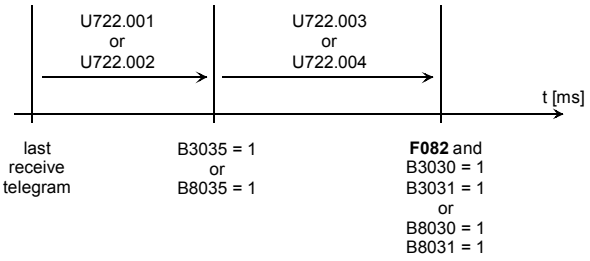 Note: The telegram monitoring function is active • from the receipt of the first error-free telegram after connection of the electronics power supply • from the receipt of the first error-free telegram after the telegram monitor has responded (i.e. monitoring timeout).	0 to 65000 [ms] 1ms	Ind: 2 FS=100 Type: O2	P052 = 3 Online
U723 (2723) *	**Timeout period for technology boards** [SW 2.1 and later] i001: Timeout period until F080 fault value 1 (no heartbeat) i002: Timeout period until F080 fault value 6 (delay until initialization is complete). Additional permissible period after expiry of time set in index 001 for completion of initialization. Example U732.001 = 30, U732.002 = 20: When the electronics supply is switched on, F080 fault value 1 is delayed by 30 s and F080 fault value 6 by 30s + 20s = 50s.	20 to 60 [s] 1s	Ind: 2 FS=20 Type: O2	P052 = 3 P051 = 40 on-line

PNU	Description	Value range [Unit] Steps	No. indices Factory setting Type	See Change (Access / Status)
U728 (2728) * (Z110)	**Source for binector/connector converter for 1st CB/TB** [SW 1.9 and later] Binectors to be converted to connector K3020 i001: 1st binector (bit 0) i002: 2nd binector (bit 1) ... i016: 16th binector (bit 15) Settings: 0 = binector B0000 1 = binector B0001 etc.	All binector numbers 1	Ind: 16 FS=0 Type: L2	P052 = 3 P051 = 40 Offline

PNU	Description	Value range [Unit] Steps	No. indices Factory setting Type	See Change (Access / Status)
U729 (2729) * (Z111)	**Source for binector/connector converter for 2nd CB** [SW 1.9 and later] Binectors to be converted to connector K8020 i001: 1st binector (bit 0) i002: 2nd binector (bit 1) ... i016: 16th binector (bit 15) Settings: 0 = binector B0000 1 = binector B0001 etc	All binector numbers 1	Ind: 16 FS=0 Type: L2	P052 = 3 P051 = 40 Offline
n732 (2732) (Z110) (Z111)	**CB/TB diagnostics** Diagnostic information about an installed communications board (CB) or technology board (TB). i001 - i032: 1. CB/TB (lower slot ID letter) i033 - i064: 2. CB (higher slot ID letter) i065, i066: 1. CB/TB (internal diagnostic data) i067, i068: 2. CB (internal diagnostic data) For detailed information, please refer to operating instructions of relevant CB or TB.		Ind: 68 Type: L2	P052 = 3
n733 (2733) (Z110) (Z111)	**CB/TB receive data** Display of control words and setpoints (process data) that are transferred to the basic converter from a communications board (CB) or technology board (TB). i001: 1st process data word from 1st CB/TB ... i016 16th process data word from 1st CB/TB i017: 1st process data word from 2nd CB/TB ... i032: 16th process data word from 2nd CB/TB		Ind: 32 Type: L2	P052 = 3
U734 (2734) * (Z110)	**Transmit data for first CB/TB (lower slot ID letter)** Selection of connectors whose contents must be injected as transmit data to the first communications board (CB) or technology board (TB). 0 = connector K0000 1 = connector K0001 etc. This parameter not only defines the transmit data, but also their position in the transmit telegram. i001: Word 1 PZD section of telegram i002: Word 2 PZD section of telegram ... i016: Word 16 in PZD section of telegram Status word 1 (K0032) should be linked to word 1.	All connector numbers 1	Ind: 16 FS= i001: 32 i002: 167 i003: 9115 i004: 0 to i016: 0 Type: L2	P052 = 3 Online
n735 (2735) (Z110) (Z111)	**Display of transmit data to CB/TB** i001: 1st process data word to 1st CB or TB ... i016 16th process data word to 1st CB or TB i017: 1st process data word to 2nd CB ... i032: 16th process data word to 2nd CB	0000 to FFFF H 1	Ind: 32 Type: L2	P052 = 3

PNU	Description	Value range [Unit] Steps	No. indices Factory setting Type	See Change (Access / Status)
U736 (2736) * (Z111)	**Transmit data for second CB (higher slot letter)** Selection of connectors whose contents must be injected as transmit data to a communications board (CB) with a higher slot ID letter. 0 = connector K0000 1 = connector K0001 etc. This parameter not only defines the transmit data, but also their position in the transmit telegram. i001: Word 1 PZD section of telegram i002: Word 2 PZD section of telegram ... i016: Word 16 in PZD section of telegram Status word 1 (K0032) should be linked to word 1.	All connector numbers 1	Ind: 16 FS=0 Type: L2	P052 = 3 Online
n738 (2738) (Z110) (Z111)	**Display of PKW job from supplementary boards in locations 2 and 3** i001: 1st word of PKW job from 1st CB ... i004 4th word of PKW job from 1st CB i005: 1st word of PKW job from 2nd CB ... i008: 4th word of PKW job from 2nd CB i009: 1st word of PKW job from TB ... i012: 4th word of PKW job from TB Details refer to “Function diagrams”, Section 8 Sheets Z110 and Z111.		Ind: 12 Type: L2	P052 = 3
n739 (2739) (Z110) (Z111)	**Display of PKW response to supplementary boards in locations 2 and 3** i001: 1st word of PKW job from 1st CB ... i004 4th word of PKW job from 1st CB i005: 1st word of PKW job from 2nd CB ... i008: 4th word of PKW job from 2nd CB i009: 1st word of PKW job from TB ... i012: 4th word of PKW job from TB Details refer to “Function diagrams”, Section 8 Sheets Z110 and Z111.		Ind: 12 Type: L2	P052 = 3

11.79 Configuring the SIMOLINK board

U740 (2740) * (Z121)	**SLB Node address** Node address of SIMOLINK board (SLB) on bus. The node address defines which telegrams the relevant converter may write to. The node address also defines whether a node is to perform the additional function of dispatcher. 0 = Dispatcher (generates telegram circulation) Not 0 = Transceiver Only one node in a SIMOLINK ring may perform the function of dispatcher. Node address 0 may not be assigned to any node if a higher-level PLC is performing the dispatcher function as the SIMOLINK master. When an SLB is selected to operate as dispatcher, all nodes must be assigned consecutive addresses, starting with address 0 for the dispatcher. i001: For first SLB in unit i002: Reserved	0 to 200 1	Ind: 2 FS=0 Type: O2	P052 = 3 P051 = 40 Offline

PNU	Description	Value range [Unit] Steps	No. indices Factory setting Type	See Change (Access / Status)
U741 (2741) * (Z121)	**SLB Telegram failure time** The telegram failure time defines the period within which a valid synchronizing telegram (SYNC telegram) must be received. Failure of any SYNC telegram to arrive within the set period indicates a communications error. The unit activates fault message F015 (see also U753) as a function of U741. 0 = No telegram failure monitoring i001: For first SLB in unit i002: Reserved	0 to 6500 [ms] 1	Ind: 2 FS=0 Type: O2	P052 = 3 P051 = 40 Online
U742 (2742) * (Z121)	**SLB Transmitter power** Setting of power of fiber optic transmitter 1 = 0m to 15m (length of plastic fiber optic cable) 2 = 15m to 25m (length of plastic fiber optic cable) 3 = 25m to 40m (length of plastic fiber optic cable) Operation at a lower transmitter power increases the service life of the transmitter and receiver modules. Reducing the transmitter power also allows hidden fault sources on the transmission path (e.g. poor contacts on fiber optics) to be detected. i001: For first SLB in unit i002: Reserved	1 to 3 1	Ind: 2 FS=3 Type: O2	P052 = 3 P051 = 40 Online
U744 (2744) *	**SLB Selection of active SLB board** Selection of the active SIMOLINK board (SLB) when two SLBs are installed in one unit. 0 = binector B0000 1 = Binector B0001 etc. A binector value of 0 means "SLB in low slot is active“. A binector value of 1 is reserved for "SLB in high slot is active".	All binector numbers	Ind: None FS=0 Type: L2	P052 = 3 P051 = 40 Online
U745 (2745) * (Z121)	**SLB No. of channels** Number of channels which dispatcher provides for each transceiver. Together with U746, the number of channels determines the number of addressable nodes. This parameter is relevant only for the dispatcher. i001: For first SLB in unit i002: Reserved	1 to 8 1	Ind: 2 FS=3 Type: O2	P052 = 3 P051 = 40 Offline
U746 (2746) * (Z121)	**SLB Cycle time** The cycle time is the period required for all telegrams to be passed around the SIMOLINK ring. Together with U745, the cycle time determines the number of addressable nodes. This parameter is relevant only for the dispatcher. i001: For first SLB in unit i002: Reserved NOTICE! The values 0.20ms to 0.99ms are reserved and must not be set here.	0.20 to 6.50 [ms] 0.01	Ind:2 FS=1.20 Type: O2	P052 = 3 P051 = 40 Offline
n748 (2748) (Z121)	**SLB Diagnosis** Visualization parameter which displays diagnostic information for an installed SIMOLINK board (SLB) i001: Number of error-free synchronizing telegrams i002: Number of CRC errors i003: Number of timeout errors i004: Last accessible bus address i005: Address of node sending the special telegram "Timeout“ i006: Implemented bus cycle time i007: Number of new configurations i008: Reserved ... i016: Reserved		Ind: 16 Type: O2	P052 = 3

PNU	Description	Value range [Unit] Steps	No. indices Factory setting Type	See Change (Access / Status)
U749 (2749) *	**SLB Read address** Definition of node addresses and channels from which the SLB must read data (a total of 8 channels can be read according to the index entries). The digits before the decimal point in the input value define the node address and those after the point the channel number (see also Section 7 "Starting up SIMOLINK boards" and Section 8 Sheet Z122). Example: 2.0 = address 2 channel 0	0.0 to 200.7 0.1	Ind: 8 FS=0.0 Type: O2	P052 = 3 P051 = 40 Offline
n750 (2750) (Z122)	**SLB Receive data** Visualization parameter for data received via the SIMOLINK board (see also Section 7 "Starting up SIMOLINK boards" and Section 8 Sheet Z122) i001: Word 1 PZD section of telegram ... i016: Word 16 in PZD section of telegram		Ind: 16 Type: L2	P052 = 3
U751 (2751) * (Z122)	**SLB Transmit data selection** Selection of connectors whose contents must be transferred as transmit data by the SLB (see also Section 7 "Starting up SIMOLINK boards" and Section 8 Sheet Z122). 0 = connector K0000 1 = connector K0001 etc. This parameter not only defines the transmit data, but also their position in the transmit telegram. i001: Channel0, low word i002: Channel0, high word ... i015: Channel7, low word i016: Channel7, high word	All connector numbers	Ind: 16 FS=0 Type: L2	P052 = 3 P051 = 40 Offline
n752 (2752) (Z122)	**SLB Display of transmit data** Process data transmitted by SLB via SIMOLINK in hexadecimal notation (see also Section 7 "Starting up SIMOLINK boards" and Section 8 Sheet Z122)		Ind: 16 Type: L2	P052 = 3
U753 (2753) * (Z121)	**SLB Fault delay** Delay in activation of fault message F015 (see also U741) 0 = fault message is activated immediately the telegram failure monitor responds	0.0 to 100.0 [s] 0.1	Ind: None FS=0.0 Type: O2	P052 = 3 P051 = 40 Offline

11.80 Configuring the EB1 expansion boards

U755 (2755) * (Z112) (Z115)	**Signal type of analog inputs on EB1** 0 = voltage input 0 to ± 10 V 1 = current input 0 to ± 20 mA i001: AI1 of the first EB2 i002: AI1 of the second EB2	0 to 1 1	Ind: 2 FS=0 Type: O2	P052 = 3 P051 = 40 Online

PNU	Description	Value range [Unit] Steps	No. indices Factory setting Type	See Change (Access / Status)
U756 (2756) (Z112) (Z115)	**Normalization of analog inputs on EB1** This parameter specifies the percentage value which is generated for an input voltage of 10V (or an input current of 20mA) at the analog input. The following general rule applies: With a voltage input: $U756\,[\%] = 10\,V * \frac{Y}{X}$ X .. Input voltage in volts Y .. % value which is generated for input current X With a current input: $U756\,[\%] = 20\,mA * \frac{Y}{X}$ X .. Input current in mA Y .. % value which is generated for input current X i001: AI1 of the first EB1 i002: AI2 of the first EB1 i003: AI3 of the first EB1 i004: AI1 of the second EB1 i005: AI2 of the second EB1 i006: AI3 of the second EB1	-1000.0 to 1000.0 [%] 0.1%	Ind: 6 FS=100.0 Type: I2	P052 = 3 P051 = 40 Online
U757 (2757) (Z112) (Z115)	**Offset for analog inputs on EB1** i001: AI1 of the first EB1 i002: AI2 of the first EB1 i003: AI3 of the first EB1 i004: AI1 of the second EB1 i005: AI2 of the second EB1 i006: AI3 of the second EB1	-100.00 to 100.00 [%] 0.01%	Ind: 6 FS=0.00 Type: I2	P052 = 3 P051 = 40 Online
U758 (2758) * (Z112) (Z115)	**Mode of signal injection at analog inputs on EB1** 0 = Injection of signal with sign 1 = Injection of absolute value of signal 2 = Injection of signal with sign, inverted 3 = Injection of absolute value of signal, inverted i001: AI1 of the first EB2 i002: AI2 of the first EB1 i003: AI3 of the first EB1 i004: AI1 of the second EB2 i005: AI2 of the second EB1 i006: AI3 of the second EB1	0 to 3 1	Ind: 6 FS=0 Type: O2	P052 = 3 P051 = 40 Offline
U759 (2759) * (Z112) (Z115)	**Source for selecting sign reversal of analog inputs on EB1** Selection of binector to control **sign reversal at the analog input** ("1" state = reverse sign) 0 = binector B0000 1 = binector B0001 etc. i001: AI1 of the first EB1 i002: AI2 of the first EB1 i003: AI3 of the first EB1 i004: AI1 of the second EB1 i005: AI2 of the second EB1 i006: AI3 of the second EB1	All binector numbers 1	Ind: 6 FS=0 Type: L2	P052 = 3 P051 = 40 Offline
U760 (2760) * (Z112) (Z115)	**Filtering time for analog inputs on EB1** Note: Hardware filtering of approximately 0.2 ms is applied as standard i001: AI1 of the first EB1 i002: AI2 of the first EB1 i003: AI3 of the first EB1 i004: AI1 of the second EB1 i005: AI2 of the second EB1 i006: AI3 of the second EB1	0 to 10000 [ms] 1ms	Ind: 6 FS=0 Type: O2	P052 = 3 P051 = 40 Online

PNU	Description	Value range [Unit] Steps	No. indices Factory setting Type	See Change (Access / Status)
U761 (2761) * (Z112) (Z115)	**Source for enabling of analog inputs on EB1** Selection of binector to control **enabling of the analog input** ("1" state = enabled) 0 = binector B0000 1 = binector B0001 etc. i001: AI1 of the first EB1 i002: AI2 of the first EB1 i003: AI3 of the first EB1 i004: AI1 of the second EB1 i005: AI2 of the second EB1 i006: AI3 of the second EB1	All binector numbers 1	Ind: 6 FS=1 Type: L2	P052 = 3 P051 = 40 Offline
n762 (2762) (Z112) (Z115)	**Display of analog inputs on EB1** i001: AI1 of the first EB1 i002: AI2 of the first EB1 i003: AI3 of the first EB1 i004: AI1 of the second EB1 i005: AI2 of the second EB1 i006: AI3 of the second EB1	-200.00 to 199.99 [%] 0.01%	Ind: 6 Type: I2	P052 = 3
U763 (2763) * (Z113) (Z116)	**Source for output value at analog outputs on EB1** Selection of connector whose value must be output at the analog output 0 = connector K0000 1 = connector K0001 etc. i001: AO1 of the first EB1 i002: AO2 of the first EB1 i003: AO1 of the second EB1 i004: AO2 of the second EB1	All connector numbers 1	Ind: 4 FS=0 Type: L2	P052 = 3 P051 = 40 Online
U764 (2764) * (Z113) (Z116)	**Mode of signal injection at analog outputs on EB1** 0 = Injection of signal with sign 1 = Injection of absolute value of signal 2 = Injection of signal with sign, inverted 3 = Injection of absolute value of signal, inverted i001: AO1 of the first EB1 i002: AO2 of the first EB1 i003: AO1 of the second EB1 i004: AO2 of the second EB1	0 to 3 1	Ind: 4 FS=0 Type: O2	P052 = 3 P051 = 40 Online
U765 (2765) * (Z113) (Z116)	**Filtering time for analog outputs on EB1** i001: AO1 of the first EB1 i002: AO2 of the first EB1 i003: AO1 of the second EB1 i004: AO2 of the second EB1	0 to 10000 [ms] 1ms	Ind: 4 FS=0 Type: O2	P052 = 3 P051 = 40 Online
U766 (2766) (Z113) (Z116)	**Normalization of analog outputs on EB1** $y[V] = x * \frac{U766}{100\%}$ x = normalization input (corresponds to filtering output) y = normalization output (corresponds to output voltage at analog output with an offset of 0) i001: AO1 of the first EB1 i002: AO2 of the first EB1 i003: AO1 of the second EB1 i004: AO2 of the second EB1	-200.00 to 199.99 [V] 0.01V	Ind: 4 FS=10.00 Type: I2	P052 = 3 P051 = 40 Online
U767 (2767) (Z113) (Z116)	**Offset for analog outputs on EB1** i001: AO1 of the first EB1 i002: AO2 of the first EB1 i003: AO1 of the second EB1 i004: AO2 of the second EB1	-10.00 to 10.00 [V] 0.01V	Ind: 4 FS=0.00 Type: I2	P052 = 3 P051 = 40 Online

PNU	Description	Value range [Unit] Steps	No. indices Factory setting Type	See Change (Access / Status)
n768 (2768) (Z113) (Z116)	**Display of analog outputs on EB1** i001: AO1 of the first EB1 i002: AO2 of the first EB1 i003: AO1 of the second EB1 i004: AO2 of the second EB1	-200.00 to 199.99 [%] 0.01%	Ind: 4 Type: I2	P052 = 3
U769 (2769) * (Z114) (Z117)	**Source for output values at binary outputs on EB1** Selection of binectors to be applied to binary outputs at terminals 43 - 46. 0 = binector B0000 1 = binector B0001 etc. i001: BO1 of the first EB1 i002: BO2 of the first EB1 i003: BO3 of the first EB1 i004: BO4 of the first EB1 i005: BO1 of the second EB1 i006: BO2 of the second EB1 i007: BO3 of the second EB1 i008: BO4 of the second EB1	All binector numbers 1	Ind: 8 FS=0 Type: L2	P052 = 3 P051 = 40 Offline
n770 (2770) (Z114) (Z117)	**Display of status of binary inputs and outputs on EB1** Representation on operator panel (PMU): 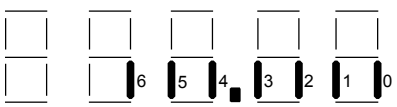 Segment ON: Corresponding terminal is activated (HIGH level is applied) Segment OFF: Corresponding terminal is not activated (LOW level is applied) Segment or bit 0 ..... Terminal 40 1 ..... Terminal 41 2 ..... Terminal 42 3 ..... Terminal 43 4 ..... Terminal 44 5 ..... Terminal 45 6 ..... Terminal 46 i001: Terminal states of first EB1 i002: Terminal states of second EB1		Ind: 2 Type: V2	P052 = 3

PNU	Description	Value range [Unit] Steps	No. indices Factory setting Type	See Change (Access / Status)

11.81 Configuring the EB2 expansion boards

n773 (2773) (Z118) (Z119)	**Display of status of binary inputs and outputs on EB2** Representation on operator panel (PMU): 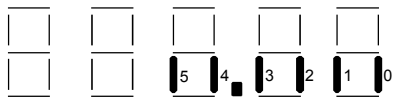 Segment ON: Corresponding terminal is activated (HIGH level is applied) Segment OFF: Corresponding terminal is not activated (LOW level is applied) Segment or bit 0 ..... Terminal 53 1 ..... Terminal 54 2 ..... Terminal 39 3 ..... Terminal 41 4 ..... Terminal 43 5 ..... Terminal 45 i001: Terminal states of first EB2 i002: Terminal states of second EB2		Ind: 2 Type: V2	P052 = 3
U774 (2774) * (Z118) (Z119)	**Source for output values at binary outputs on EB2** Selection of binectors to be applied to binary outputs at terminals 39 - 46. 0 = binector B0000 1 = binector B0001 etc. i001: BO1 of the first EB2 i002: BO2 of the first EB2 i003: BO3 of the first EB2 i004: BO4 of the first EB2 i005: BO1 of the second EB2 i006: BO2 of the second EB2 i007: BO3 of the second EB2 i008: BO4 of the second EB2	All binector numbers 1	Ind: 8 FS=0 Type: L2	P052 = 3 P051 = 40 Online
U775 (2775) * (Z118) (Z119)	**Signal type of analog input on EB2** 0 = voltage input 0 to ± 10 V 1 = current input 0 to ± 20 mA i001: AI1 of the first EB2 i002: AI1 of the second EB2	0 to 1 1	Ind: 2 FS=0 Type: O2	P052 = 3 P051 = 40 Online
U776 (2776) (Z118) (Z119)	**Normalization of analog input on EB2** This parameter specifies the percentage value which is generated for an input voltage of 10V (or an input current of 20mA) at the analog input. The following general rule applies: With a voltage input: $U776\,[\%] = 10\,V * \frac{Y}{X}$ X .. Input voltage in volts Y .. % value which is generated for input current X With a current input: $U776\,[\%] = 20\,mA * \frac{Y}{X}$ X .. Input current in mA Y .. % value which is generated for input current X i001: AI of the first EB2 i002: AI of the second EB2	-1000.0 to 1000.0 [%] 0.1%	Ind: 2 FS=100.0 Type: I2	P052 = 3 P051 = 40 Online

PNU	Description	Value range [Unit] Steps	No. indices Factory setting Type	See Change (Access / Status)
U777 (2777) (Z118) (Z119)	**Offset for analog input on EB2** i001: AI of the first EB2 i002: AI of the second EB2	-100.00 to 100.00 [%] 0.01%	Ind: 2 FS=0.00 Type: I2	P052 = 3 P051 = 40 Online
U778 (2778) * (Z118) (Z119)	**Mode of signal injection at analog input on EB2** 0 = Injection of signal with sign 1 = Injection of absolute value of signal 2 = Injection of signal with sign, inverted 3 = Injection of absolute value of signal, inverted i001: AI of the first EB2 i002: AI of the second EB2	0 to 3 1	Ind: 2 FS=0 Type: O2	P052 = 3 P051 = 40 Offline
U779 (2779) * (Z118) (Z119)	**Source for selection of sign reversal at** Selection of binector to control **sign reversal at the analog input** ("1" state = reverse sign) 0 = binector B0000 1 = binector B0001 etc. i001: AI of the first EB2 i002: AI of the second EB2	All binector numbers 1	Ind: 2 FS=0 Type: L2	P052 = 3 P051 = 40 Offline
U780 (2780) (Z118) (Z119)	**Filtering time for analog input on EB2** Note: Hardware filtering of approximately 0.2 ms is applied as standard i001: AI of the first EB2 i002: AI of the second EB2	0 to 10000 [ms] 1ms	Ind: 2 FS=0 Type: O2	P052 = 3 P051 = 40 Online
U781 (2781) * (Z118) (Z119)	**Source for enabling of analog inputs on EB2** Selection of binector to control **enabling of the analog input** ("1" state = enabled) 0 = binector B0000 1 = binector B0001 etc. i001: AI of the first EB2 i002: AI of the second EB2	All binector numbers 1	Ind: 2 FS=1 Type: L2	P052 = 3 P051 = 40 Offline
n782 (2782) (Z118) (Z119)	**Display of analog input on EB2** i001: AI of the first EB2 i002: AI of the second EB2	-200.0 to 199.99 [%] 0.01%	Ind: 2 Type: I2	P052 = 3
U783 (2783) * (Z118) (Z119)	**Source for output value at analog output on EB2** Selection of connector whose value must be output at the analog output 0 = connector K0000 1 = connector K0001 etc. i001: AO of the first EB2 i002: AO of the second EB2	All connector numbers 1	Ind: 2 FS=0 Type: L2	P052 = 3 P051 = 40 Online
U784 (2784) * (Z118) (Z119)	**Mode of signal injection at analog output on EB2** 0 = Injection of signal with sign 1 = Injection of absolute value of signal 2 = Injection of signal with sign, inverted 3 = Injection of absolute value of signal, inverted i001: AO of the first EB2 i002: AO of the second EB2	0 to 3 1	Ind: 2 FS=0 Type: O2	P052 = 3 P051 = 40 Online
U785 (2785) (Z118) (Z119)	**Filtering time for analog outputs on EB1** i001: AO of the first EB2 i002: AO of the second EB2	0 to 10000 [ms] 1ms	Ind: 2 FS=0 Type: O2	P052 = 3 P051 = 40 Online

PNU	Description	Value range [Unit] Steps	No. indices Factory setting Type	See Change (Access / Status)
U786 (2786) (Z118) (Z119)	**Normalization of analog outputs on EB2** $y[V]=x * \frac{U786}{100\%}$ x = normalization input (corresponds to filtering output) y = normalization output (corresponds to output voltage at analog output with an offset of 0) i001: AO of the first EB2 i002: AO of the second EB2	-200.00 to 199.99 [V] 0.01V	Ind: 2 FS=10.00 Type: I2	P052 = 3 P051 = 40 Online
U787 (2787) (Z118) (Z119)	**Offset for analog output on EB2** i001: AO of the first EB2 i002: AO of the second EB2	-10.00 to 10.00 [V] 0.01V	Ind: 2 FS=0.00 Type: I2	P052 = 3 P051 = 40 Online
n788 (2788) (Z118) (Z119)	**Display of analog outputs on EB2** i001: AO of the first EB2 i002: AO of the second EB2	-200.0 to 199.99 [%] 0.01%	Ind: 2 Type: I2	P052 = 3

11.82 Configuring the SBP pulse encoder board

U790 (2790) * (Z120)	**Configuration of input level of A/B and CRTL tracks** i001: A/B and CRTL track i002: Zero pulse 0: HTL unipolar 1: TTL unipolar 2: HTL differential input 3: TTL/RS422 differential input	0 to 3 1	Ind: 2 FS=1 Type: O2	P052 = 3 P051 = 40 Offline
U791 (2791) * (Z120)	**Configuration of encoder supply voltage** The supply is subject to a current limit of 250mA **Caution:** Setting the parameter incorrectly can damage the encoder (i.e. 15 V voltage for an encoder which requires a 5 V supply). 0: 5V voltage supply 1: 15V voltage supply	0 to 1 1	Ind: None FS=0 Type: O2	P052 = 3 P051 = 40 Offline
U792 (2792) * (Z120)	**Number of pulses per revolution** Number of lines on one track around circumference of disk	100 to 20000 1	Ind: None FS=1024 Type: O2	P052 = 3 P051 = 40 Offline
U793 (2793) * (Z120)	**Encoder type** 0: Encoder with A/B track (two tracks displaced by 90 degrees) 1: Encoder with separate forward and reverse tracks	0 to 1 1	Ind: None FS=0 Type: O2	P052 = 3 P051 = 40 Offline
U794 (2794) (Z120)	**Reference speed** When actual speed = reference speed a value of 100% is output in the appropriate diagnostic parameter (n795) and connector	50.0 to 6500.0 [rev/min]	Ind: None FS=500.0 Type: O2	P052 = 3 P051 = 40 Online
n795 (2795) (Z120)	**Display of actual speed in % of reference speed**	-200.00 to 199.99 [%]	Ind: None Type: I2	P052 = 3
U796 (2796) * S00 (Z120)	**Resetting the position counter** [SW 2.0 and later] Setting the type of resetting for position acquisition 0 = free-running (no reset) 1 = see function diagram Z120 2 = see function diagram Z120	0 to 2 1	Ind: none FS=0 Type: O2	P052 = 2 P051 = 40 Online

PNU	Description	Value range [Unit] Steps	No. indices Factory setting Type	See Change (Access / Status)

11.83 Configuration of paralleling interface

Notes about parameterization of the paralleling interface see Chapter 6.3.2

U800 (2800) * (G195)	**Control word for parallel connection of SIMOTRAS converters** [SW 2.1 and later] 0: Paralleling interface not active 1: Paralleling interface active The gating pulses are generated by this SIMOTRAS converter 2: Paralleling interface active The gating pulses of the master are used	0 to 2 1	Ind: None FS=0 Type: O2	P052 = 3 P051 = 40 Offline
U803 (2803) * (G195)	**Operating mode for the parallel connection** [SW 2.1 and later] 0 Standard mode 1 Do not set	0 to 1 1	Ind: None FS=0 Type: O2	P052 = 3 P051 = 40 off-line
U804 (2804) * (G195)	**Transmit data on paralleling interface** [SW 2.1 and later] Selection of connectors whose contents must be injected as transmit data (master to slaves or slave to master) for the paralleling interface. 0 = connector K0000 1 = connector K0001 etc. This parameter not only defines the transmit data, but also their position in the transmit telegram. i001: Word 1 of telegram ... i005: Word 5 of telegram i006: Do not change the adjusting! ... i010: Do not change the adjusting!	All connector numbers 1	Ind: 10 FS=0 Type: L2	P052 = 3 P051 = 40 Online
U805 (2805) (G195)	**Control word for bus terminator of paralleling interface** [SW 2.1 and later] 0: No bus terminator 1: Bus terminator active	0 to 1 1	Ind: None FS=0 Type: O2	P052 = 3 P051 = 40 Online
U806 (2806) * (G195)	**Address for the parallel connection of SIMOTRAS devices** [SW 2.1 and later] i001: Address of the masters or of the slaves i002: Address of the masters or of the slaves (i001 and i002 must be set to the same value) 2: Slave device with address 2 3: Slave device with address 3 4: Slave device with address 4 5: Slave device with address 5 6: Slave device with address 6 12: Master device for 1 slave device with address 2 13: Master device for 2 slave devices with addresses 2 and 3 14: Master device for 3 slave devices with addresses 2, 3 and 4 15: Master device for 4 slave devices with addresses 2, 3, 4 and 5 16: Master device for 5 slave devices with addresses 2, 3, 4, 5 and 6	see column on left	Ind: 2 FS=2 Type: O2	P052 = 3 P051 = 40 off-line

PNU	Description	Value range [Unit] Steps	No. indices Factory setting Type	See Change (Access / Status)
U807 (2807) (G195)	**Telegram failure time on paralleling interface** [SW 2.1 and later] 0 No time monitoring 0.001...65.000 Permissible time interval between two data exchange operations before a fault message is output. Fault message F014 is displayed if no data are exchanged with the parallel-connected converter within this delay period. The monitoring function is implemented within a 20 ms cycle. For this reason, only setting values which constitute a multiple of 20 ms are meaningful. Note: The telegram monitoring function is active • from the receipt of the first error-free telegram after connection of the electronics power supply • from the receipt of the first error-free telegram after the telegram monitor has responded (i.e. monitoring timeout).	0.000 to 65.000 [s] 0.001s	Ind: None FS=0.100 Type: O2	P052 = 3 P051 = 40 Online
U808 (2808) * (G195)	**Source for triggering of message** F014 [SW 2.1 and later] Selection of binector which must trigger message F014 when it switches to log. "1" 6040 = binector B6040 6041 = binector B6041	6040, 6041	Ind: None FS=6040 Type: L2	P052 = 3 P051 = 40 Offline
n809 (2809) (G195)	**Diagnostic information for paralleling interface** [SW 2.1 and later] i001 to i009 = Free-running counter, overflow at 65535 i001: Number of error-free telegrams i002: Number of errored telegrams i003: Transmit Error Counter i004: Receive Error Counter i005: Phase Error Counter i006: Baud rate Error Counter i007: Bad BCC Counter i008: Timeout Counter i009: Number of telegrams with unknown identifier	0 to 65535	Ind: 9 Type: O2	P052 ≥ 0

PNU	Description	Value range [Unit] Steps	No. indices Factory setting Type	See Change (Access / Status)
n810 (2810) (G195)	**Diagnostic information for the paralleling interface** [SW 2.1 and later] 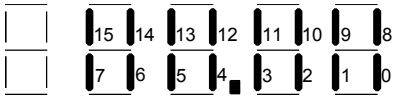 Unit with active “master” function Segment 0 ..... 1 ..... 2 ..... ON: Slave with address 2 responding 3 ..... ON: Slave with address 3 responding 4 ..... ON: Slave with address 4 responding 5 ..... ON: Slave with address 5 responding 6 ..... ON: Slave with address 6 responding 7 ..... 8 ..... OFF 9 ..... OFF 10 ..... 11 ..... 12 ..... 13 ..... 14 ..... 15 ..... ON: Master function active Unit with “slave” function Segment 0 ..... 1 ..... 2 ..... ON: Data for slave with address 2 are ok 3 ..... ON: Data for slave with address 3 are ok 4 ..... ON: Data for slave with address 4 are ok 5 ..... ON: Data for slave with address 5 are ok 6 ..... ON: Data for slave with address 6 are ok 7 ..... 8 ..... ON: Slave function active 9 ..... ON: Firing pulses of master are used 10 ..... 11 ..... 12 ..... 13 ..... 14 ..... 15 ..... OFF		Ind: None Type: V2	P052 = 3

PNU	Description	Value range [Unit] Steps	No. indices Factory setting Type	See Change (Access / Status)
n812 (2812) (G195)	**Receive data on paralleling interface** [SW 2.1 and later] When U806=1 (master) is selected i001 Receive data from slave with address 2, word 1 ... i005 Receive data from slave with address 2, word 5 i006 Receive data from slave with address 3, word 1 ... i010 Receive data from slave with address 3, word 5 i011 Receive data from slave with address 4, word 1 ... i015 Receive data from slave with address 4, word 5 i016 Receive data from slave with address 5, word 1 ... i020 Receive data from slave with address 5, word 5 i021 Receive data from slave with address 6, word 1 ... i025 Receive data from slave with address 6, word 5 When U806=2 to 6 (slave) is selected: i001 Receive data from master, word 1 ... i005 Receive data from master, word 5 i006 Not in use ... i025 Not in use	0000 to FFFFH 1	Ind: 25 Type: L2	P052 ≥ 0
n813 (2813) (G195)	**Transmit data on paralleling interface** [SW 2.1 and later] When U806=1 (master) is selected i001 Transmit data to slaves, word 1 ... i005 Transmit data to slaves, word 5 When U806=2 to 6 (slave) is selected: i001 Transmit data to master, word 1 ... i005 Transmit data to master, word 5	0 to FFFFH	Ind: 5 Type: L2	P052 ≥ 0

11.84 Parameter for DriveMonitor

n845 to n909 (2840 to 2909)	**These parameters are used by DriveMonitor**			

PNU	Description	Value range [Unit] Steps	No. indices Factory setting Type	See Change (Access / Status)

11.85 Slot deactivation

U910 (2910) * (G101)	**Slot deactivation parameter** [SW 1.9 and later] Parameter for deactivating supplementary boards, e.g. during start-up or troubleshooting (for details of slot identification codes, see diagram under parameter r063) i001: - i002: Slot D i003: Slot E i004: Slot F i005: Slot G 0 Board in slot active 1 Board in slot not active The deactivated slot is ignored during the search for installed supplementary boards when the supply voltage is next switched on. Likewise, activation of a slot does not take effect until the supply voltage has been switched off and on again. Note: Slot E can simply be deactivated to conceal a technology board (large format). If a communications board is installed in addition to the technology board, and the technology board is concealed, then the communications board will not be processed either.	0 and 1 1	Ind: 5 FS=0 Type: O2	P052 = 3 P051 = 40 Offline

11.86 Parameter for DriveMonitor

U911 to n949 (2911 to 2949)	**These parameters are used by DriveMonitor**			

PNU	Description	Value range [Unit] Steps	No. indices Factory setting Type	See Change (Access / Status)

11.87 Technology software S00: Sampling times

Sampling times
For each function block of the technology software S00, it is necessary to define in which "time slice" (i.e. with which sampling time) it is processed.

5 time slices are available:

Time slice	Sampling time
1	1 * T0 (firing-pulse-synchronous time slice)
2	2 * T0 (firing-pulse-synchronous time slice)
4	4 * T0 (firing-pulse-synchronous time slice)
10	20 ms (not firing-pulse-synchronous)
20	Block is not calculated

T0 = Mean distance between 2 firing pulses
T0 = 3.33 ms at 50 Hz line frequency
T0 = 2.78 ms at 60 Hz line frequency

U950 (2950) * S00 — **Selection of time slices for function blocks FB1 to FB100**

1, 2, 4, 10, 20 | Ind: 100 FS= see column on left Type: O2 | P052 = 3 P051 = 40 Offline

Index	Function block	Time slice (FS)	Index	Function block	Time slice (FS)
i001	FB1	20	i051	FB51	1
i002	FB2	1	i052	FB52	1
i003	FB3	1	i053	FB53	1
i004	FB4	1	i054	FB54	10
i005	FB5	1	i055	FB55	1
i006	FB6	1	i056	FB56	1
i007	FB7	1	i057	FB57	1
i008	FB8	1	i058	FB58	10
i009	FB9	1	i059	FB59	20
i010	FB10	1	i060	FB60	1
i011	FB11	1	i061	FB61	1
i012	FB12	1	i062	FB62	1
i013	FB13	1	i063	FB63	1
i014	FB14	1	i064	FB64	20
i015	FB15	1	i065	FB65	1
i016	FB16	10	i066	FB66	1
i017	FB17	10	i067	FB67	1
i018	FB18	10	i068	FB68	10
i019	FB19	10	i069	FB69	10
i020	FB20	1	i070	FB70	1
i021	FB21	1	i071	FB71	1
i022	FB22	1	i072	FB72	1
i023	FB23	1	i073	FB73	1
i024	FB24	1	i074	FB74	1
i025	FB25	1	i075	FB75	1
i026	FB26	1	i076	FB76	1
i027	FB27	1	i077	FB77	1
i028	FB28	1	i078	FB78	1
i029	FB29	1	i079	FB79	1
i030	FB30	1	i080	FB80	1
i031	FB31	1	i081	FB81	1
i032	FB32	2	i082	FB82	1
i033	FB33	2	i083	FB83	1
i034	FB34	2	i084	FB84	1
i035	FB35	1	i085	FB85	1
i036	FB36	1	i086	FB86	1
i037	FB37	1	i087	FB87	1
i038	FB38	1	i088	FB88	1
i039	FB39	20	i089	FB89	10
i040	FB40	1	i090	FB90	1
i041	FB41	1	i091	FB91	1
i042	FB42	2	i092	FB92	1
i043	FB43	2	i093	FB93	1
i044	FB44	2	i094	FB94	1
i045	FB45	1	i095	FB95	1
i046	FB46	1	i096	FB96	1
i047	FB47	1	i097	FB97	1
i048	FB48	10	i098	FB98	1
i049	FB49	10	i099	FB99	1
i050	FB50	1	i100	FB100	1

PNU	Description						Value range [Unit] Steps	No. indices Factory setting Type	See Change (Access / Status)
U951 (2951) * S00	**Selection of time slices for function blocks FB101 to FB200**						1, 2, 4, 10, 20	Ind: 100 FS= see column on left Type: O2	P052 = 3 P051 = 40 Offline
	Index	Function block	Time slice (FS)	Index	Function block	Time slice (FS)			
	i001	FB101	1	i051	FB151	1			
	i002	FB102	1	i052	FB152	1			
	i003	FB103	1	i053	FB153	1			
	i004	FB104	1	i054	FB154	1			
	i005	FB105	1	i055	FB155	1			
	i006	FB106	1	i056	FB156	1			
	i007	FB107	1	i057	FB157	1			
	i008	FB108	1	i058	FB158	1			
	i009	FB109	1	i059	FB159	1			
	i010	FB110	1	i060	FB160	1			
	i011	FB111	1	i061	FB161	1			
	i012	FB112	1	i062	FB162	1			
	i013	FB113	1	i063	FB163	1			
	i014	FB114	1	i064	FB164	1			
	i015	FB115	1	i065	FB165	1			
	i016	FB116	2	i066	FB166	1			
	i017	FB117	20	i067	FB167	1			
	i018	FB118	1	i068	FB168	1			
	i019	FB119	1	i069	FB169	1			
	i020	FB120	1	i070	FB170	1			
	i021	FB121	1	i071	FB171	1			
	i022	FB122	1	i072	FB172	1			
	i023	FB123	1	i073	FB173	1			
	i024	FB124	1	i074	FB174	1			
	i025	FB125	1	i075	FB175	1			
	i026	FB126	1	i076	FB176	1			
	i027	FB127	1	i077	FB177	1			
	i028	FB128	1	i078	FB178	1			
	i029	FB129	1	i079	FB179	1			
	i030	FB130	1	i080	FB180	1			
	i031	FB131	1	i081	FB181	1			
	i032	FB132	1	i082	FB182	1			
	i033	FB133	1	i083	FB183	1			
	i034	FB134	1	i084	FB184	1			
	i035	FB135	1	i085	FB185	1			
	i036	FB136	1	i086	FB186	1			
	i037	FB137	1	i087	FB187	1			
	i038	FB138	1	i088	FB188	1			
	i039	FB139	1	i089	FB189	1			
	i040	FB140	1	i090	FB190	1			
	i041	FB141	1	i091	FB191	1			
	i042	FB142	1	i092	FB192	1			
	i043	FB143	1	i093	FB193	1			
	i044	FB144	1	i094	FB194	1			
	i045	FB145	1	i095	FB195	1			
	i046	FB146	1	i096	FB196	10			
	i047	FB147	1	i097	FB197	10			
	i048	FB148	20	i098	FB198	10			
	i049	FB149	20	i099	FB199	10			
	i050	FB150	1	i100	FB200	1			

PNU	Description						Value range [Unit] Steps	No. indices Factory setting Type	See Change (Access / Status)
U952 (2952) * S00	**Selection of time slices for function blocks FB201 to FB300**						1, 2, 4, 10, 20	Ind: 100 FS= see column on left Type: O2	P052 = 3 P051 = 40 Offline
	Index	Function block	Time slice (FS)	Index	Function block	Time slice (FS)			
	i001	FB201	1	i051	FB251	1			
	i002	FB202	1	i052	FB252	1			
	i003	FB203	1	i053	FB253	1			
	i004	FB204	1	i054	FB254	1			
	i005	FB205	1	i055	FB255	20			
	i006	FB206	1	i056	FB256	1			
	i007	FB207	1	i057	FB257	1			
	i008	FB208	1	i058	FB258	1			
	i009	FB209	1	i059	FB259	1			
	i010	FB210	1	i060	FB260	10			
	i011	FB211	1	i061	FB261	10			
	i012	FB212	10	i062	FB262	10			
	i013	FB213	10	i063	FB263	10			
	i014	FB214	10	i064	FB264	10			
	i015	FB215	1	i065	FB265	10			
	i016	FB216	1	i066	FB266	10			
	i017	FB217	1	i067	FB267	10			
	i018	FB218	1	i068	FB268	10			
	i019	FB219	1	i069	FB269	10			
	i020	FB220	1	i070	FB270	10			
	i021	FB221	1	i071	FB271	10			
	i022	FB222	1	i072	FB272	10			
	i023	FB223	1	i073	FB273	10			
	i024	FB224	1	i074	FB274	10			
	i025	FB225	1	i075	FB275	10			
	i026	FB226	1	i076	FB276	10			
	i027	FB227	1	i077	FB277	10			
	i028	FB228	1	i078	FB278	10			
	i029	FB229	10	i079	FB279	10			
	i030	FB230	1	i080	FB280	10			
	i031	FB231	1	i081	FB281	10			
	i032	FB232	1	i082	FB282	10			
	i033	FB233	1	i083	FB283	10			
	i034	FB234	20	i084	FB284	10			
	i035	FB235	20	i085	FB285	10			
	i036	FB236	20	i086	FB286	10			
	i037	FB237	20	i087	FB287	10			
	i038	FB238	20	i088	FB288	10			
	i039	FB239	20	i089	FB289	10			
	i040	FB240	1	i090	FB290	10			
	i041	FB241	1	i091	FB291	10			
	i042	FB242	1	i092	FB292	10			
	i043	FB243	1	i093	FB293	10			
	i044	FB244	1	i094	FB294	10			
	i045	FB245	1	i095	FB295	10			
	i046	FB246	10	i096	FB296	10			
	i047	FB247	10	i097	FB297	10			
	i048	FB248	10	i098	FB298	10			
	i049	FB249	10	i099	FB299	10			
	i050	FB250	1	i100	FB300	20			

11.88 Parameter for DriveMonitor

n953 to n959 (2953 to 2959)	**These parameters are used by DriveMonitor**			

PNU	Description	Value range [Unit] Steps	No. indices Factory setting Type	See Change (Access / Status)

11.89 Technology software S00: Altering the processing sequence of function blocks

Processing sequence of function blocks

The function blocks of the S00 technology software are processed within the computational cycle in the sequence defined in parameters U960 to U962:

1. Function block with number set in U960 index.001
...
100. Function block with number set in U960 index.100
101. Function block with number set in U961 index.001
...
200. Function block with number set in U961 index.100
201. Function block with number set in U962 index.001
etc.

The numbers are parameterized in ascending sequence (1, 2, 3, …) in the factory setting (standard sequence).

Altering the processing sequence:

If a new function block number is entered (i.e. moved from another location) in a certain index of parameter U960, U961 or U962, then the new processing sequence is defined such that the function block previously entered in this index will be processed after the newly entered block. The gap which may be left at the old location of the moved (newly entered) function block is closed by shifting the function block numbers behind the space forward by one position.

Example 1:

Starting with the standard sequence setting, the processing sequence must be altered such that function block 90 (analog signal selector switch) will be processed immediately after function block 83 (tracking/storage element):

Function block no. 90 must be entered in the index in which the number of the function block previously processed after block 83 (84 in U960.9065) is currently stored. Function block numbers (84 and 85) in the following indices of U960 will be shifted up to the next index automatically.

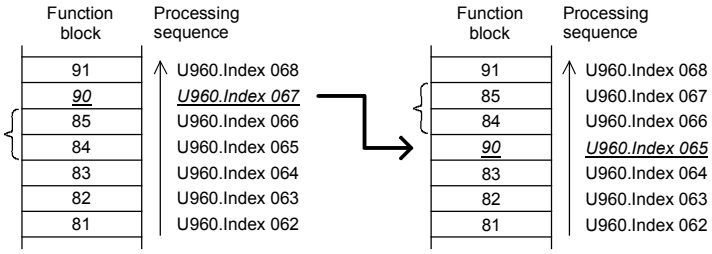

Example 2:

Starting with the standard sequence setting, the processing sequence must be altered such that function block 38 (sign inverter) will be processed immediately after function block 45 (divider):

Function block number 38 must be entered in the index in which the number of the function block previously processed after function block 45 (46 in U960.i035) is currently stored. The function block numbers stored in the indices immediately above this position shift up by one index, then all numbers immediately above the gap left shift down automatically by one index.

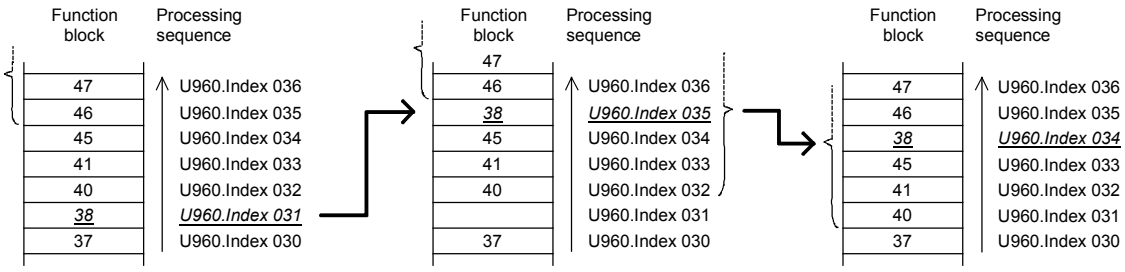

PNU	Description	Value range [Unit] Steps	No. indices Factory setting Type	See Change (Access / Status)
U960 (2960) * S00	**Processing sequence of function blocks of S00 technology software (1)** i001: Number of function block for 1st place in processing sequence i002: Number of function block for 2nd place in processing sequence etc.	Numbers of all function blocks	Ind: 100 FS= Standard sequence Type: O2	P052 = 3 P051 = 40 Offline
U961 (2961) * S00	**Processing sequence of function blocks of S00 technology software (2)** i001: Number of function block for 101st place in processing sequence i002: Number of function block for 102nd place in processing sequence etc.	Numbers of all function blocks	Ind: 100 FS= Standard sequence Type: O2	P052 = 3 P051 = 40 Offline
U962 (2962) * S00	**Processing sequence of function blocks of S00 technology software (3)** i001: Number of function block for 201st place in processing sequence i002: Number of function block for 202nd place in processing sequence etc.	Numbers of all function blocks	Ind: 100 FS= Standard sequence Type: O2	P052 = 3 P051 = 40 Offline
U969 (2969) * S00	**Automatic setting and activation of the execution sequence** 0 Return 1 Set standard sequence: The numbers of the function blocks are entered in ascending order in Parameters U960, U961 and U962. The parameter is then automatically set to value 0. 2 Set optimum sequence: U960, U961, and U962 are set in such a way that as few deadtimes as possible occur. After that, the parameter is automatically set to value 0 again. 3 Set standard setting of the sampling times. U950, U951, and U952 are set to the factory setting. 4 Automatic activation / deactivation: U950, U951 and U952 are set in such a way that the unwired function blocks are deselected and the wired function blocks are selected (activated), if they are not yet selected. The time slice 10 (sampling time 20 ms) is set for all function blocks not previously activated, the time slice is left unchanged for all previously activated function blocks. In order to ensure that this function also functions correctly for function blocks FB261 to FB269 (PI controllers 2 to 10), the value 0 is to be set for PI controllers 2 to 10 which are not used and this must be done at the corresponding indices U544.i002 to i010 before this function is used.	0 to 4 1	Ind: None FS=0 Type: O2	P052 = 3 P051 = 40 Offline

11.90 Parameter access for experts

U979 (2979) *	**Parameter access for experts** [SW 1.9 and later] 999 Parameter access for experts is activated. This means that even Offline parameters can be modified in operation. Notes: The value of this parameter is lost when the electronics power supply is switched off. Parameters can be modified only if both P051 and P052 as well as P927 are set to the correct values.	0 to 2000 1	Ind: None FS=0 Type: O2	P052 = 3 P051 = 40 Online

PNU	Description	Value range [Unit] Steps	No. indices Factory setting Type	See Change (Access / Status)

11.91 List of existing and modified U and n parameters

n980 (2980)	**List of existing parameter numbers, continuation** Viewing parameter for displaying the first 100 parameter numbers in the U or n parameter range (numbers 2000 to 2999). The parameters are arranged in ascending sequence. The list is continued at the parameter whose number is displayed under index 101. For example: 2981 = n981 The first 0 to be displayed signals that no further parameter numbers are stored.		Ind: 101 Type: O2	P052 = 3
n981 (2981)	**List of existing parameter numbers, continuation** See n980.		Ind: 101 Type: O2	P052 = 3
n982 (2982)	**List of existing parameter numbers, continuation** See n980.		Ind: 101 Type: O2	P052 = 3
n983 (2983)	**List of existing parameter numbers, continuation** See n980.		Ind: 101 Type: O2	P052 = 3
n984 (2984)	**List of existing parameter numbers, continuation** See n980.		Ind: 101 Type: O2	P052 = 3
n985 (2985)	**List of existing parameter numbers, continuation** See n980.		Ind: 101 Type: O2	P052 = 3
n986 (2986)	**List of existing parameter numbers, continuation** See n980.		Ind: 101 Type: O2	P052 = 3
n987 (2987)	**List of existing parameter numbers, continuation** See n980.		Ind: 101 Type: O2	P052 = 3
n988 (2988)	**List of existing parameter numbers, continuation** See n980.		Ind: 101 Type: O2	P052 = 3
n989 (2989)	**List of existing parameter numbers, continuation** See n980.		Ind: 101 Type: O2	P052 = 3
n990 (2990)	**List of modified parameters, continuation** Viewing parameter for displaying the first 100 modified parameters in the U or n parameter range (numbers 2000 to 2999). The parameters are arranged in ascending sequence. The list is continued at the parameter whose number is displayed under index 101. For example: 2991 = n991 The first 0 to be displayed signals that there are no further modified parameters.		Ind: 101 Type: O2	P052 = 3
n991 (2991)	**List of modified parameters, continuation** See n990.		Ind: 101 Type: O2	P052 = 3
n992 (2992)	**List of modified parameters, continuation** See n990.		Ind: 101 Type: O2	P052 = 3
n993 (2993)	**List of modified parameters, continuation** See n990.		Ind: 101 Type: O2	P052 = 3
n994 (2994)	**List of modified parameters, continuation** See n990.		Ind: 101 Type: O2	P052 = 3
n995 (2995)	**List of modified parameters, continuation** See n990.		Ind: 101 Type: O2	P052 = 3
n996 (2996)	**List of modified parameters, continuation** See n990.		Ind: 101 Type: O2	P052 = 3
n997 (2997)	**List of modified parameters, continuation** See n990.		Ind: 101 Type: O2	P052 = 3

PNU	Description	Value range [Unit] Steps	No. indices Factory setting Type	See Change (Access / Status)
n998 (2998)	**List of modified parameters, continuation** See n990.		Ind: 101 Type: O2	P052 = 3
n999 (2999)	**List of modified parameters, continuation** See n990.		Ind: 101 Type: O2	P052 = 3

12 List of connectors and binectors

12.1 Connector list

Display:
The values of connectors can be displayed via parameters r041, r042, r043 and P044.

Normalization: The following applies unless stated otherwise:
100% corresponds
for currents, to the converter rated current (r072.i002),
for voltages, to the converter rated voltage (P078.i001)
or, for speeds, to the parameterized maximum speed (P741 or P143).

Numeric representation:
The following numeric representation applies to all connectors:
In the internal software representation, 100% corresponds to the number 4000 hex = 16384 dec. The value range is -200.00% ... +199.99%, corresponding to 8000 hex ... 7FFF hex. The connectors are transferred via the serial interfaces in this internal mode of representation.

The following numeric representation applies to all double-word connectors:
In the internal software representation, 100% corresponds to the number 4000 0000 hex = 16384*65536 dec.
The value range is -200.00% ... +199.9999999%, corresponding to -2^{31} dec ... $+(2^{31} - 1)$ dec or 8000 0000 hex ... 7FFF FFFF hex.
If a double-word connector is the input of a connector selection parameter, or if a connector is the input of a double-word connector selection parameter, this may be equivalent to division or multiplication by the value 65536. For details of the connection to double-word connectors, see Section 9.1, "The following rules apply to the selection of double-word connectors“.

Connector	Description	Normalization	Function diag., Sheet
Fixed values			
K0000	Fixed value 0		G120
K0001	Fixed value 100.00%	16384 ≙ 100%	G120
K0002	Fixed value 200.00%	16384 ≙ 100%	G120
K0003	Fixed value -100.00%	16384 ≙ 100%	G120
K0004	Fixed value -200.00%	16384 ≙ 100%	G120
K0005	Fixed value 50.00%	16384 ≙ 100%	G120
K0006	Fixed value 150.00%	16384 ≙ 100%	G120
K0007	Fixed value -50.00%	16384 ≙ 100%	G120
K0008	Fixed value -150.00%	16384 ≙ 100%	G120
K0009	Fixed value 0 or special function specified in each case		

Analog inputs			
K0010	Analog input, terminal 4 / 5 (main setpoint) Raw value after A/D conversion (unfiltered, not normalized)	16384 ≙ 100%	G113
K0011	Analog input, terminal 4 / 5 (main setpoint) After normalization, offset injection, filtering	16384 ≙ 100%	G113
K0012	Analog input, terminal 103 / 104 (main actual value) Raw value after A/D conversion (unfiltered, not normalized)	16384 ≙ 100%	G113
K0013	Analog input, terminal 103 / 104 (main actual value) After normalization, offset injection, filtering	16384 ≙ 100%	G113
K0014	Analog input, terminal 6 / 7 (analog selectable input 1) Raw value after A/D conversion (unfiltered, not normalized)	16384 ≙ 100%	G113
K0015	Analog input, terminal 6 / 7 (analog selectable input 1) After normalization, offset injection, filtering	16384 ≙ 100%	G113
K0016	Analog input, terminal 8 / 9 (analog selectable input 2) Raw value after A/D conversion (unfiltered, not normalized)	16384 ≙ 100%	G114

Connector	Description	Normalization	Function diag., Sheet
K0017	Analog input, terminal 8 / 9 (analog selectable input 2) After normalization, offset injection, filtering	16384 ≙ 100%	G114
K0018	Analog input, terminal 10 / 11 (analog selectable input 3) Raw value after A/D conversion (unfiltered, not normalized)	16384 ≙ 100%	G114
K0019	Analog input, terminal 10 / 11 (analog selectable input 3) After normalization, offset injection, filtering	16384 ≙ 100%	G114

Binary inputs, binary outputs			
K0020	Binary inputs, terminals 36 to 43 and 211 to 214 Bit0 = Status of terminal 36 Bit1 = Status of terminal 37 Bit2 = Status of terminal 38 Bit3 = Status of terminal 39 Bit4 = Status of terminal 40 Bit5 = Status of terminal 41 Bit6 = Status of terminal 42 Bit7 = Status of terminal 43 Bit8 = Status of terminal 211 Bit9 = Status of terminal 212 Bit10 = Status of terminal 213 Bit11 = Status of terminal 214	1 ≙ 1	G110
K0021	Binary outputs, terminals 46 to 52, 109/110 Bit0 = Status of terminal 46 Bit1 = Status of terminal 48 Bit2 = Status of terminal 50 Bit3 = Status of terminal 52 Bit7 = Status of terminal 109/110 Bit8 = Overload at terminal 46 Bit9 = Overload at terminal 48 Bit10 = Overload at terminal 50 Bit11 = Overload at terminal 52 Bit12 = Overload at terminal 26 (15V output) Bit13 = Overload at terminal 34, 44 and/or 210 (24V output)	1 ≙ 1	G112

Analog outputs			
K0026	Analog output, terminal 14 / 15	16384 ≙ 100%	G115
K0027	Analog output, terminal 16 / 17	16384 ≙ 100%	G115
K0028	Analog output, terminal 18 / 19	16384 ≙ 100%	G116
K0029	Analog output, terminal 20 / 21	16384 ≙ 100%	G116

Control word, status word			
K0030	Control word 1	1 ≙ 1	G180
K0031	Control word 2	1 ≙ 1	G181
K0032	Status word 1	1 ≙ 1	G182
K0033	Status word 2	1 ≙ 1	G183
K0034	Active function data set [SW 2.0 and later]	1 ≙ 1	G175
K0035	Active BICO data set [SW 2.0 and later]	1 ≙ 1	G175

Evaluation of the pulse encoder board SBP			
KK0036	Position actual value of SBP [SW 2.0 and later]	1 ≙ 1	Z120
K0038	Actual speed value of SBP in rev./min [SW 2.0 and later]	1 ≙ 1 rpm	Z120
K0039	Actual speed value from SBP pulse encoder board	16384 ≙ 100%	Z120

Connector	Description	Normalization	Function diag., Sheet
Pulse encoder evaluation The pulse encoder evaluation function supplies an actual speed value (K0040 und K0041) and an actual position value (K0042, K0043, K0044, KK0046). The pulses of the pulse encoder are counted according to sign to generate the actual position value (a hardware counter is used for this purpose.) The setting in parameter P144 (multiple evaluation) is also relevant, i.e. when P144 = 0, every positive edge of the first track of the pulse encoder is counted, when P144 = 1, every edge of the first track of the encoder is counted, when P144 = 2, every edge of both tracks of the encoder is counted. When P145 =1 (automatic switchover of multiple evaluation), the position sensor (K0042, K0043, K0044, KK0046) produces invalid data! K0042 and K0043 together form a signed 24-bit actual position value. (value range: FF80 0000H to 007F FFFFH or -2^{23} to $+2^{23}$ -1)			
K0040	Actual speed value from pulse encoder	16384 ≙ 100%	G145
K0041	Absolute actual speed value from pulse encoder	16384 ≙ 100%	G145
K0042	Actual position value, LOW word LOW word of 24-bit actual position value	1 ≙ 1	G145
K0043	Actual position value, HIGH word HIGH word of 24-bit actual position value	1 ≙ 1	G145
K0044	Actual position value, number of zero markers	1 ≙ 1	G145
KK0046	Actual position value [SW 1.9 and later] Actual position value extended in the software to a 32-bit value (value range: 8000 0000H to 7FFF FFFFH or -2^{31} to $+2^{31}$ -1)	1 ≙ 1	G145
KK0047	Deceleration distance [SW 1.9 and later] When setpoint 0 is applied to the ramp-function generator input, the speed setpoint at the generator output is reduced to zero according to the current settings for ramp-down and transition roundings. This double-word connector specifies the requisite deceleration distance as the number of increments of the pulse encoder (defined in parameters P140 ff.). This deceleration distance calculation is correct only on the condition that the parameterized ramp-down time and transition roundings do not change during the braking operation.	1 ≙ 1	G136
K0048	Actual speed value from pulse encoder in rpm [SW 2.0 and later]	1 ≙ 1 rpm	G145

Heatsink temperature			
K0050	Heatsink temperature	16384 ≙ 100°C	

Temperature sensor inputs K0051 or K0052 is always set to 0 when a PTC thermistor or no temperature sensor is connected (P490.x ≠ 1).			
K0051	Motor temperature 1 (from sensor to terminal 22 / 23)	16384 ≙ 100°C	G185
K0052	Motor temperature 2 (from sensor to terminal 204 / 205)	16384 ≙ 100°C	G185

Closed-loop current control, auto-reversing stage, gating unit			
K0100	Firing angle	16384 ≙ 0° 0 ≙ 90° -16384 ≙ 180°	G163
K0101	Firing angle before limitation	16384 ≙ 0° 0 ≙ 90° -16384 ≙ 180°	G163
K0102	Precontrol value + current controller output (gating unit input)	16384 ≙ 0° 0 ≙ 90° -16384 ≙ 180°	G162
K0103	$100\% * \frac{\text{duration of current flow}}{\text{time between 2 firing pulses}}$ [SW 2.0 and later]	16384 ≙ 100%	G162

Connector	Description	Normalization	Function diag., Sheet
K0105	Code of triggered thyristor pair in a thyristor bridge for switching through the corresponding line phase: 0 UV 2 UW 4 VW 6 VU 8 WU 10 WV	1 ≙ 1	
K0106	Requested torque direction	0 = No torque direction 1 = Torque direction I 2 = Torque direction II	G163
K0107	Internal actual current value, signed, averaged over the last 6 current peaks in each case, normalized to rated motor current [SW 1.9 and later]	16384 ≙ 100% of P100	G162
K0108	RMS value of stator current, averaged over one line period	16384 ≙ 100%	
K0109	Internal signed actual current value, averaged over the last 6 current peaks in each case	16384 ≙ 100%	G162
K0110	Current controller output	16384 ≙ 100%	G162
K0111	Current controller output, P component	16384 ≙ 100%	G162
K0112	Current controller output, I component	16384 ≙ 100%	G162
K0113	Current controller, setpoint/actual value deviation	16384 ≙ 100%	G162
K0114	Internal signed actual current value, averaged over one firing cycle	16384 ≙ 100%	G162
K0115	Current controller actual value	16384 ≙ 100%	G162
K0116	Absolute value of internal actual current	16384 ≙ 100%	G162
K0117	Internal signed actual current value	16384 ≙ 100%	G162
K0118	Current controller setpoint	16384 ≙ 100%	G162
K0119	Current controller setpoint before absolute-value generation	16384 ≙ 100%	G162
K0120	Current setpoint before reduced gear stressing	16384 ≙ 100%	G161
K0121	Precontrol output	16384 ≙ 0° 0 ≙ 90° -16384 ≙ 180°	G162

Current limitation, torque limitation, speed limiting controller			
K0131	Lowest positive current limit	16384 ≙ 100%	G161
K0132	Highest negative current limit	16384 ≙ 100%	G161
K0133	Current setpoint before limitation (incl. additional setpoint)	16384 ≙ 100%	G161
K0134	Torque setpoint (after speed limiting controller) (= K0140)	16384 ≙ 100%	G160
K0136	Speed limiting controller: Active torque limit 1	16384 ≙ 100%	G160
K0137	Speed limiting controller: Active torque limit 2	16384 ≙ 100%	G160
K0140	Torque setpoint (after speed limiting controller) (= K0134)	16384 ≙ 100%	G160
K0141	Torque setpoint (after torque limitation)	16384 ≙ 100%	G160
K0143	Upper torque limit	16384 ≙ 100%	G160
K0144	Lower torque limit	16384 ≙ 100%	G160
K0145	Torque setpoint before limitation (incl. additional setpoint)	16384 ≙ 100%	G160
K0147	Torque setpoint before limitation (without additional setpoint)	16384 ≙ 100%	G160
K0148	Torque setpoint (from speed controller)	16384 ≙ 100%	G152

Compensation of moment of inertia (dv/dt injection)			
K0150	Component of precontrol for speed controller calculated from d(K0168)/dt * P540	16384 ≙ 100%	G153
K0152	Component of precontrol for speed controller calculated from f(K0164) * P541 (= function of speed actual value/setpoint deviation in K0164)	16384 ≙ 100%	G153

Speed controller **Setpoint processing, ramp-function generator, friction and moment of inertia compensation**			
K0160	Speed controller output	16384 ≙ 100%	G152

Connector	Description	Normalization	Function diag., Sheet
K0161	P component	16384 ≙ 100%	G152
K0162	I component	16384 ≙ 100%	G152
K0164	Setpoint/actual value deviation	16384 ≙ 100%	G152
K0165	Generation of setpoint/actual value deviation output	16384 ≙ 100%	G152
K0166	Selected actual speed value (absolute value)	16384 ≙ 100%	G151
K0167	Selected actual speed value (signed)	16384 ≙ 100%	G151
K0168	D component output * (-1)	16384 ≙ 100%	G152
K0169	D component output	16384 ≙ 100%	G152
K0170	Speed setpoint from ramp-function generator after limitation	16384 ≙ 100%	G137
K0171	Precontrol for speed controller (friction and moment of inertia compensation)	16384 ≙ 100%	G153
K0172	Component of precontrol determined by friction for speed controller	16384 ≙ 100%	G153
K0173	Filtered component of precontrol determined by moment of inertia for speed controller	16384 ≙ 100%	G153
K0174	Filtering element output for nset filtering	16384 ≙ 100%	G152
K0176	Speed droop	16384 ≙ 100%	G151
K0177	Band-stop output 1	16384 ≙ 100%	G152
K0178	Band-stop output 2	16384 ≙ 100%	G152
K0179	Filtering element output for nact filtering	16384 ≙ 100%	G152
K0181	Lowest positive setpoint limit	16384 ≙ 100%	G137
K0182	Highest negative setpoint limit	16384 ≙ 100%	G137
K0183	Speed setpoint before limitation	16384 ≙ 100%	G137
K0190	Ramp-function generator output (before speed setpoint limitation)	16384 ≙ 100%	G136
K0191	dv/dt (rise in ramp-function generator output in time period set in P542)	16384 ≙ 100%	G136
K0192	Effective ramp-function generator input variable	16384 ≙ 100%	G136
K0193	Setpoint input for ramp-function generator	16384 ≙ 100%	G135
K0194	Total of main setpoint (limited) + additional setpoint	16384 ≙ 100%	G135
K0195	Ramp-function generator input before setpoint reduction	16384 ≙ 100%	G135
K0196	Effective positive limit for main setpoint	16384 ≙ 100%	G135
K0197	Effective negative limit for main setpoint	16384 ≙ 100%	G135
K0198	Main setpoint before limitation	16384 ≙ 100%	G135

Crawling setpoint, inching setpoint, oscillation, fixed setpoint			
K0201	Crawling setpoint	16384 ≙ 100%	G130
K0202	Inching setpoint	16384 ≙ 100%	G129
K0203	Oscillation setpoint	16384 ≙ 100%	G128
K0204	Fixed setpoint	16384 ≙ 100%	G127
K0206	Crawling setpoint: Output value of function block	16384 ≙ 100%	G130
K0207	Inching setpoint: Output value of function block	16384 ≙ 100%	G129
K0208	Oscillation/square wave generator: Output value of function block	16384 ≙ 100%	G128
K0209	Fixed setpoint: Output value of function block	16384 ≙ 100%	G127

Connector selector switches				
K0230	Output of connector selector switch 1	[SW 1.9 and later]	1 ≙ 1	G124
K0231	Output of connector selector switch 2	[SW 1.9 and later]	1 ≙ 1	G124

Motorized potentiometer			
K0240	Motorized potentiometer output (setpoint from potentiometer)	16384 ≙ 100%	G126

Connector	Description	Normalization	Function diag., Sheet
K0241	dy/dt (rise in ramp-function generator output in time period set in P542 + P465)	16384 ≙ 100%	G126
K0242	Ramp-function generator input in motorized potentiometer (setpoint)	16384 ≙ 100%	G126

General connectors			
K0301	Line voltage U-V	16384 ≙ P078.001	
K0302	Line voltage V-W	16384 ≙ P078.001	
K0303	Line voltage W-U	16384 ≙ P078.001	
K0305	Average line voltage, filtered	16384 ≙ P078.001	
K0306	Line frequency	16384 ≙ 50.0Hz	
K0309	Calculated motor temperature rise Normalization: 16384 ≙ the overtemperature which is reached at a continuous current corresponding to the rated motor current	see Column 2	
K0310	Calculated thyristor temperature rise as % of maximum permissible thyristor temperature rise	16384 ≙ 100%	
K0311	Hours run [SW 1.9 and later]	1 ≙ 1h	G189
K0312	Hours run / 10 [SW 2.25 and later]	1 ≙ 10h	

Fixed setpoints			
K0401	Fixed value 1 (P401)	16384 ≙ 100%	G120
K0402	Fixed value 2 (P402)	16384 ≙ 100%	G120
K0403	Fixed value 3 (P403)	16384 ≙ 100%	G120
K0404	Fixed value 4 (P404)	16384 ≙ 100%	G120
K0405	Fixed value 5 (P405)	16384 ≙ 100%	G120
K0406	Fixed value 6 (P406)	16384 ≙ 100%	G120
K0407	Fixed value 7 (P407)	16384 ≙ 100%	G120
K0408	Fixed value 8 (P408)	16384 ≙ 100%	G120
K0409	Fixed value 9 (P409)	16384 ≙ 100%	G120
K0410	Fixed value 10 (P410)	16384 ≙ 100%	G120
K0411	Fixed value 11 (P411)	16384 ≙ 100%	G120
K0412	Fixed value 12 (P412)	16384 ≙ 100%	G120
K0413	Fixed value 13 (P413)	16384 ≙ 100%	G120
K0414	Fixed value 14 (P414)	16384 ≙ 100%	G120
K0415	Fixed value 15 (P415)	16384 ≙ 100%	G120
K0416	Fixed value 16 (P416)	16384 ≙ 100%	G120

Start pulse for speed controller			
K0451	Fixed setting value 1 for n controller I component	16384 ≙ 100% of P100	G150
K0452	Fixed setting value 1 for n controller I component, weighted	16384 ≙ 100% of P100	G150
K0453	Fixed setting value 2 for n controller I component	16384 ≙ 100% of P100	G150
K0454	Setting value 1 for n controller I component	16384 ≙ 100% of P100	G150

Control inputs, control outputs			
K0500	Binary inputs, terminals 72 to 79 Bit0 = Status of terminal 72 Bit1 = Status of terminal 73 Bit2 = Status of terminal 74 Bit3 = Status of terminal 75 Bit4 = Status of terminal 76 Bit5 = Status of terminal 77 Bit6 = Status of terminal 78 Bit7 = Status of terminal 79	Bit = 0: Input is LOW (not activated) Bit = 1: Input is HIGH (activated)	G117

Connector	Description	Normalization	Function diag., Sheet
K0501	Binary outputs terminals 81/82 to 93/94 Bit0 = Status of terminal 81/82 Bit1 = Status of terminal 83/84 Bit2 = Status of terminal 85/86 Bit3 = Status of terminal 87/88 Bit4 = Status of terminal 89/90 Bit5 = Status of terminal 91/92 Bit6 = Status of terminal 93/94	Bit = 0: Output relay has not picked up Bit = 1: Output relay has picked up	G119

4 stage master switch			
K0510	Setpoint of 4-stage master switch	16384 ≙ 100%	G125

General connectors			
K0800	Operating status (code number) with one decimal place		
K0801	Latest fault and alarm message Low byte: Latest alarm message If several alarms are active simultaneously, the alarm with the lowest number if displayed here. Value "0" means that no alarm is active. High byte: Latest fault message Value "0" means that no fault is active.		G189
K0810	Limitation bits The meaning of these bits is described in Section 11, Parameter List, under parameter r040.		

Connectors for raw data of pulse encoder evaluation			
K0910	Measuring time for speed evaluation of pulse encoder 1 corresponds to 41.6666 ns if K0912 = xxxx xx0x (divisor 1:1) 1 corresponds to 83.3333 ns if K0912 = xxxx x01x (divisor 1:2) 1 corresponds to 166.666 ns if K0912 = xxxx x11x (divisor 1:4) This value is always slightly higher than the measuring time set in P147.		G145
K0911	Number of pulses during measuring time set in K0910 The speed of the pulse encoder can be calculated from connectors K0910, K0911 and K0912 by the following equation: $n_{act}[rev/s] = \frac{K0911 * 24\,000\,000}{Pulse\ no.\ of\ encoder * Meas.\ time}$ Pulse number of encoder = 1*P141, if K0912 = xx0x xxxx (1x evaluation) Pulse number of encoder = 2*P141, if K0912 = x01x xxxx (2x evaluation) Pulse number of encoder = 4*P141, if K0912 = x11x xxxx (4x evaluation) Meas. time = 1* K0910 if K0912 = xxxx xx0x (divisor 1:1) Meas. time = 2* K0910 if K0912 = xxxx x01x (divisor 1:2) Meas. time = 4* K0910 if K0912 = xxxx x11x (divisor 1:4)		G145

Connector	Description	Normalization	Function diag., Sheet
K0912	Status of speed evaluation of pulse encoder xxxx xxx0 = asynchronous measurement xxxx xxx1 = (gating-pulse-)synchronized measurement xxxx xx0x = divisor 1:1 xxxx x01x = divisor 1:2 xxxx x11x = divisor 1:4 xxx0 0xxx = pulse encoder type1 (P140 = 1) xxx1 0xxx = pulse encoder type1a (P140 = 2) xxx0 1xxx = pulse encoder type2 (P140 = 3) xxx1 1xxx = pulse encoder type3 (P140 = 4) xx0x xxxx = 1x evaluation x01x xxxx = 2x evaluation x11x xxxx = 4x evaluation 0xxx xxxx = No pulse encoder error 1xxx xxxx = Pulse encoder signal states occurred during the measurement which may not occur on a rotating pulse encoder. They indicate a signal short circuit or an interruption in a pulse encoder signal. When the pulse encoder is stationary or oscillating around one position, signal states of this type are perfectly normal and do not indicate a signal fault.		G145

K0960	Time interval between averaged line synchronization time reference point and "unfiltered" zero crossing of scanned and software-filtered line voltage in 1.334 µs (when P152 = 1 to 20)	1 ≙ 1.334 µs	
K0970	Positive line zero crossing of phase U-V (as T1 instant)		
K0971	Negative line zero crossing of phase W-U (as T1 instant)		
K0972	Positive line zero crossing of phase V-W (as T1 instant)		
K0973	Negative line zero crossing of phase U-V (as T1 instant)		
K0974	Positive line zero crossing of phase W-U (as T1 instant)		
K0975	Negative line zero crossing of phase V-W (as T1 instant)		
K0980	Cycle time of the asynchronous part of the firing interrupt (at the C167 processor) and, at the same time, the cycle time of the fastest time slot (time slot 1) at the C163/C165 processor [as of SW2.22]		
K0981	Filtered C163/C165 total processor utilization K9990, which is also used to control the processor utilization through variation of the cycle time of the asynchronous part of the firing interrupt [as of SW2.22]		
K0982	Filtered C167 total processor utilization K0990, which is also used to control the processor utilization through variation of the cycle time of the asynchronous part of the firing interrupt [as of SW2.22]		
K0986	Last line zero crossing used (as T1 instant)		
K0987	Firing instant (as T1 instant)		
K0988	Firing pulse cycle time (time difference between current and previous firing instant) in T1 increments of 1.334 µs each		

Connector	Description	Normalization	Function diag., Sheet
K0989	Information about torque direction and firing angle Nibble 0 .. Torque direction 0 = M0 (--) 1 = MI 2 = MII 9 = Reserved Nibble 1 .. Code number for firing angle 1 = Requested firing angle has been implemented 2 = Reserved 3 = Firing angle at 180° 4 = Firing angle at 180° 5 = Requested firing angle cannot be implemented because of strong pulse compression 6 = Reserved 7 = Reserved 8 = Reserved Nibble 2 .. Code number for requested torque direction 0: Not RUN (≥ o1.0) 1: Torque direction acc. to current setpoint (==> M0, MI, MII) 2: Reserved 3: Reserved 4: Additional wait time in auto-reversing stage (==> M0) 5: Current has reached 0 (==> M0), phase reversal permitted 6: Current not yet 0 (==>M0), phase reversal not permitted yet 7: Reserved 8: Reserved 9: Reserved A: Wait for rotor contactor to switch (==> M0) B: Reserved C: Reserved D: Reserved E: Reserved F: Reserved Nibble 3 .. Code number for zero current signal [SW 1.9 and later] 0: The "I=0" signal is not evaluated because no change in torque direction is required 1: I <> 0 2: I = 0 for less than 0.1 msec 3: I = 0 for more than 0.1 msec 4: I = 0 for more than 0.6 msec 5: Ia-act (K116) is < 1 % for more than 6 current peaks		
K0990	Current total processor capacity utilization (C167)		
K0991	Projected total processor capacity utilization (C167) for line frequency = 65Hz		
K0992	Current total processor capacity (C167) utilized by background routines		
K0994	Total processor capacity (C167) currently utilized by routines synchronized with firing pulses		

Serial interface 1 (USS1 on G-SST1)			
K2001	USS1 receive data, word 1	1 ≙ 1	G170
K2002	USS1 receive data, word 2	1 ≙ 1	G170
K2003	USS1 receive data, word 3	1 ≙ 1	G170
K2004	USS1 receive data, word 4	1 ≙ 1	G170
K2005	USS1 receive data, word 5	1 ≙ 1	G170
K2006	USS1 receive data, word 6	1 ≙ 1	G170
K2007	USS1 receive data, word 7	1 ≙ 1	G170
K2008	USS1 receive data, word 8	1 ≙ 1	G170
K2009	USS1 receive data, word 9	1 ≙ 1	G170
K2010	USS1 receive data, word 10	1 ≙ 1	G170
K2011	USS1 receive data, word 11	1 ≙ 1	G170
K2012	USS1 receive data, word 12	1 ≙ 1	G170
K2013	USS1 receive data, word 13	1 ≙ 1	G170
K2014	USS1 receive data, word 14	1 ≙ 1	G170

Connector	Description		Normalization	Function diag., Sheet
K2015	USS1 receive data, word 15		1 ≙ 1	G170
K2016	USS1 receive data, word 16		1 ≙ 1	G170
K2020	Output of binector/connector converter for G-SST1		1 ≙ 1	G170
KK2031	USS1 receive data, word 1 and 2	[SW 2.0 and later]	1 ≙ 1	G169
KK2032	USS1 receive data, word 2 and 3	[SW 2.0 and later]	1 ≙ 1	G169
KK2033	USS1 receive data, word 3 and 4	[SW 2.0 and later]	1 ≙ 1	G169
KK2034	USS1 receive data, word 4 and 5	[SW 2.0 and later]	1 ≙ 1	G169
KK2035	USS1 receive data, word 5 and 6	[SW 2.0 and later]	1 ≙ 1	G169
KK2036	USS1 receive data, word 6 and 7	[SW 2.0 and later]	1 ≙ 1	G169
KK2037	USS1 receive data, word 7 and 8	[SW 2.0 and later]	1 ≙ 1	G169
KK2038	USS1 receive data, word 8 and 9	[SW 2.0 and later]	1 ≙ 1	G169
KK2039	USS1 receive data, word 9 and 10	[SW 2.0 and later]	1 ≙ 1	G169
KK2040	USS1 receive data, word 10 and 11	[SW 2.0 and later]	1 ≙ 1	G169
KK2041	USS1 receive data, word 11 and 12	[SW 2.0 and later]	1 ≙ 1	G169
KK2042	USS1 receive data, word 12 and 13	[SW 2.0 and later]	1 ≙ 1	G169
KK2043	USS1 receive data, word 13 and 14	[SW 2.0 and later]	1 ≙ 1	G169
KK2044	USS1 receive data, word 14 and 15	[SW 2.0 and later]	1 ≙ 1	G169
KK2045	USS1 receive data, word 15 and 16	[SW 2.0 and later]	1 ≙ 1	G169

Process data exchange with 1st CB/TB				
K3001	Receive data from 1st CB/TB, word 1		1 ≙ 1	Z110
K3002	Receive data from 1st CB/TB, word 2		1 ≙ 1	Z110
K3003	Receive data from 1st CB/TB, word 3		1 ≙ 1	Z110
K3004	Receive data from 1st CB/TB, word 4		1 ≙ 1	Z110
K3005	Receive data from 1st CB/TB, word 5		1 ≙ 1	Z110
K3006	Receive data from 1st CB/TB, word 6		1 ≙ 1	Z110
K3007	Receive data from 1st CB/TB, word 7		1 ≙ 1	Z110
K3008	Receive data from 1st CB/TB, word 8		1 ≙ 1	Z110
K3009	Receive data from 1st CB/TB, word 9		1 ≙ 1	Z110
K3010	Receive data from 1st CB/TB, word 10		1 ≙ 1	Z110
K3011	Receive data from 1st CB/TB, word 11		1 ≙ 1	Z110
K3012	Receive data from 1st CB/TB, word 12		1 ≙ 1	Z110
K3013	Receive data from 1st CB/TB, word 13		1 ≙ 1	Z110
K3014	Receive data from 1st CB/TB, word 14		1 ≙ 1	Z110
K3015	Receive data from 1st CB/TB, word 15		1 ≙ 1	Z110
K3016	Receive data from 1st CB/TB, word 16		1 ≙ 1	Z110
K3020	Output of binector/connector converter for 1st CB/TB	[SW 1.9 and later]	1 ≙ 1	Z124
KK3031	Receive data from 1st CB/TB, word 1 and 2	[SW 2.0 and later]	1 ≙ 1	Z124
KK3032	Receive data from 1st CB/TB, word 2 and 3	[SW 2.0 and later]	1 ≙ 1	Z124
KK3033	Receive data from 1st CB/TB, word 3 and 4	[SW 2.0 and later]	1 ≙ 1	Z124
KK3034	Receive data from 1st CB/TB, word 4 and 5	[SW 2.0 and later]	1 ≙ 1	Z124
KK3035	Receive data from 1st CB/TB, word 5 and 6	[SW 2.0 and later]	1 ≙ 1	Z124
KK3036	Receive data from 1st CB/TB, word 6 and 7	[SW 2.0 and later]	1 ≙ 1	Z124
KK3037	Receive data from 1st CB/TB, word 7 and 8	[SW 2.0 and later]	1 ≙ 1	Z124
KK3038	Receive data from 1st CB/TB, word 8 and 9	[SW 2.0 and later]	1 ≙ 1	Z124
KK3039	Receive data from 1st CB/TB, word 9 and 10	[SW 2.0 and later]	1 ≙ 1	Z124
KK3040	Receive data from 1st CB/TB, word 10 and 11	[SW 2.0 and later]	1 ≙ 1	Z124
KK3041	Receive data from 1st CB/TB, word 11 and 12	[SW 2.0 and later]	1 ≙ 1	Z124
KK3042	Receive data from 1st CB/TB, word 12 and 13	[SW 2.0 and later]	1 ≙ 1	Z124
KK3043	Receive data from 1st CB/TB, word 13 and 14	[SW 2.0 and later]	1 ≙ 1	Z124

Connector	Description		Normalization	Function diag., Sheet
KK3044	Receive data from 1st CB/TB, word 14 and 15	[SW 2.0 and later]	1 ≙ 1	Z124
KK3045	Receive data from 1st CB/TB, word 15 and 16	[SW 2.0 and later]	1 ≙ 1	Z124

SCB1 with SCI1				
K4101	SCI, slave 1, analog input 1	[SW 1.9 and later]	1 ≙ 1	Z150
K4102	SCI, slave 1, analog input 2	[SW 1.9 and later]	1 ≙ 1	Z150
K4103	SCI, slave 1, analog input 3	[SW 1.9 and later]	1 ≙ 1	Z150
K4201	SCI, slave 2, analog input 1	[SW 1.9 and later]	1 ≙ 1	Z151
K4202	SCI, slave 2, analog input 2	[SW 1.9 and later]	1 ≙ 1	Z151
K4203	SCI, slave 2, analog input 3	[SW 1.9 and later]	1 ≙ 1	Z151

Expansion boards			
K5101	1st analog input of 1st plugged EB1	16384 ≙ 100%	Z112
K5102	2nd analog input of 1st plugged EB1	16384 ≙ 100%	Z112
K5103	3rd analog input of 1st plugged EB1	16384 ≙ 100%	Z112
K5104	1st analog output of 1st plugged EB1	16384 ≙ 100%	Z113
K5105	2nd analog output of 1st plugged EB1	16384 ≙ 100%	Z113
K5106	Binary inputs and outputs of 1st plugged EB1	1 ≙ 1	Z114
K5111	Analog input of 1st plugged EB2	16384 ≙ 100%	Z118
K5112	Analog output of 1st plugged EB2	16384 ≙ 100%	Z118
K5113	Binary inputs and outputs of 1st plugged EB2	1 ≙ 1	Z118
K5201	1st analog input of 2nd plugged EB1	16384 ≙ 100%	Z115
K5202	2nd analog input of 2nd plugged EB1	16384 ≙ 100%	Z115
K5203	3rd analog input of 2nd plugged EB1	16384 ≙ 100%	Z115
K5204	1st analog output of 2nd plugged EB1	16384 ≙ 100%	Z116
K5205	2nd analog output of 2nd plugged EB1	16384 ≙ 100%	Z116
K5206	Binary inputs and outputs of 2nd plugged EB1	1 ≙ 1	Z117
K5211	Analog input of 2nd plugged EB2	16384 ≙ 100%	Z119
K5212	Analog output of 2nd plugged EB2	16384 ≙ 100%	Z119
K5213	Binary inputs and outputs of 2nd plugged EB2	1 ≙ 1	Z119

Serial interface 2 (USS2 / Peer-to-peer 2 on G-SST2)			
K6001	USS2 / Peer2 receive data, word 1	1 ≙ 1	G171, G173
K6002	USS2 / Peer2 receive data, word 2	1 ≙ 1	G171, G173
K6003	USS2 / Peer2 receive data, word 3	1 ≙ 1	G171, G173
K6004	USS2 / Peer2 receive data, word 4	1 ≙ 1	G171, G173
K6005	USS2 / Peer2 receive data, word 5	1 ≙ 1	G171, G173
K6006	USS2 receive data, word 6	1 ≙ 1	G171
K6007	USS2 receive data, word 7	1 ≙ 1	G171
K6008	USS2 receive data, word 8	1 ≙ 1	G171
K6009	USS2 receive data, word 9	1 ≙ 1	G171
K6010	USS2 receive data, word 10	1 ≙ 1	G171
K6011	USS2 receive data, word 11	1 ≙ 1	G171
K6012	USS2 receive data, word 12	1 ≙ 1	G171
K6013	USS2 receive data, word 13	1 ≙ 1	G171
K6014	USS2 receive data, word 14	1 ≙ 1	G171
K6015	USS2 receive data, word 15	1 ≙ 1	G171
K6016	USS2 receive data, word 16	1 ≙ 1	G171
K6020	Output of binector/connector converter for G-SST2	1 ≙ 1	G171, G173

Connector	Description	Normalization	Function diag., Sheet
Paralleling interface			
K6021	Word 1 from master / Word 1 from slave with address 2	1 ≙ 1	G195
K6022	Word 2 from master / Word 2 from slave with address 2	1 ≙ 1	G195
K6023	Word 3 from master / Word 3 from slave with address 2	1 ≙ 1	G195
K6024	Word 4 from master / Word 4 from slave with address 2	1 ≙ 1	G195
K6025	Word 5 from master / Word 5 from slave with address 2	1 ≙ 1	G195
K6031	Word 1 from slave with address 3	1 ≙ 1	G195
K6032	Word 2 from slave with address 3	1 ≙ 1	G195
K6033	Word 3 from slave with address 3	1 ≙ 1	G195
K6034	Word 4 from slave with address 3	1 ≙ 1	G195
K6035	Word 5 from slave with address 3	1 ≙ 1	G195
K6041	Word 1 from slave with address 4	1 ≙ 1	G195
K6042	Word 2 from slave with address 4	1 ≙ 1	G195
K6043	Word 3 from slave with address 4	1 ≙ 1	G195
K6044	Word 4 from slave with address 4	1 ≙ 1	G195
K6045	Word 5 from slave with address 4	1 ≙ 1	G195
K6051	Word 1 from slave with address 5	1 ≙ 1	G195
K6052	Word 2 from slave with address 5	1 ≙ 1	G195
K6053	Word 3 from slave with address 5	1 ≙ 1	G195
K6054	Word 4 from slave with address 5	1 ≙ 1	G195
K6055	Word 5 from slave with address 5	1 ≙ 1	G195
K6061	Word 1 from slave with address 6	1 ≙ 1	G195
K6062	Word 2 from slave with address 6	1 ≙ 1	G195
K6063	Word 3 from slave with address 6	1 ≙ 1	G195
K6064	Word 4 from slave with address 6	1 ≙ 1	G195
K6065	Word 5 from slave with address 6	1 ≙ 1	G195

Serial interface 2 (USS2 / Peer-to-peer 2 on G-SST2)				
KK6081	USS2 / Peer2 receive data, word 1 and 2	[SW 2.0 and later]	1 ≙ 1	G169
KK6082	USS2 / Peer2 receive data, word 2 and 3	[SW 2.0 and later]	1 ≙ 1	G169
KK6083	USS2 / Peer2 receive data, word 3 and 4	[SW 2.0 and later]	1 ≙ 1	G169
KK6084	USS2 / Peer2 receive data, word 4 and 5	[SW 2.0 and later]	1 ≙ 1	G169
KK6085	USS2 receive data, word 5 and 6	[SW 2.0 and later]	1 ≙ 1	G169
KK6086	USS2 receive data, word 6 and 7	[SW 2.0 and later]	1 ≙ 1	G169
KK6087	USS2 receive data, word 7 and 8	[SW 2.0 and later]	1 ≙ 1	G169
KK6088	USS2 receive data, word 8 and 9	[SW 2.0 and later]	1 ≙ 1	G169
KK6089	USS2 receive data, word 9 and 10	[SW 2.0 and later]	1 ≙ 1	G169
KK6090	USS2 receive data, word 10 and 11	[SW 2.0 and later]	1 ≙ 1	G169
KK6091	USS2 receive data, word 11 and 12	[SW 2.0 and later]	1 ≙ 1	G169
KK6092	USS2 receive data, word 12 and 13	[SW 2.0 and later]	1 ≙ 1	G169
KK6093	USS2 receive data, word 13 and 14	[SW 2.0 and later]	1 ≙ 1	G169
KK6094	USS2 receive data, word 14 and 15	[SW 2.0 and later]	1 ≙ 1	G169
KK6095	USS2 receive data, word 15 and 16	[SW 2.0 and later]	1 ≙ 1	G169

Process data exchange with SIMOLINK			
K7001	Receive data from SIMOLINK, word 1	1 ≙ 1	Z122
K7002	Receive data from SIMOLINK, word 2	1 ≙ 1	Z122
K7003	Receive data from SIMOLINK, word 3	1 ≙ 1	Z122
K7004	Receive data from SIMOLINK, word 4	1 ≙ 1	Z122
K7005	Receive data from SIMOLINK, word 5	1 ≙ 1	Z122

Connector	Description	Normalization	Function diag., Sheet
K7006	Receive data from SIMOLINK, word 6	1 ≙ 1	Z122
K7007	Receive data from SIMOLINK, word 7	1 ≙ 1	Z122
K7008	Receive data from SIMOLINK, word 8	1 ≙ 1	Z122
K7009	Receive data from SIMOLINK, word 9	1 ≙ 1	Z122
K7010	Receive data from SIMOLINK, word 10	1 ≙ 1	Z122
K7011	Receive data from SIMOLINK, word 11	1 ≙ 1	Z122
K7012	Receive data from SIMOLINK, word 12	1 ≙ 1	Z122
K7013	Receive data from SIMOLINK, word 13	1 ≙ 1	Z122
K7014	Receive data from SIMOLINK, word 14	1 ≙ 1	Z122
K7015	Receive data from SIMOLINK, word 15	1 ≙ 1	Z122
K7016	Receive data from SIMOLINK, word 16	1 ≙ 1	Z122
KK7031	Receive data from SIMOLINK, word 1 and 2 [SW 2.0 and later]	1 ≙ 1	Z124
KK7032	Receive data from SIMOLINK, word 2 and 3 [SW 2.0 and later]	1 ≙ 1	Z124
KK7033	Receive data from SIMOLINK, word 3 and 4 [SW 2.0 and later]	1 ≙ 1	Z124
KK7034	Receive data from SIMOLINK, word 4 and 5 [SW 2.0 and later]	1 ≙ 1	Z124
KK7035	Receive data from SIMOLINK, word 5 and 6 [SW 2.0 and later]	1 ≙ 1	Z124
KK7036	Receive data from SIMOLINK, word 6 and 7 [SW 2.0 and later]	1 ≙ 1	Z124
KK7037	Receive data from SIMOLINK, word 7 and 8 [SW 2.0 and later]	1 ≙ 1	Z124
K7101	Receive data from SIMOLINK, special data word 1	1 ≙ 1	Z122
K7102	Receive data from SIMOLINK, special data word 2	1 ≙ 1	Z122
K7103	Receive data from SIMOLINK, special data word 3	1 ≙ 1	Z122
K7104	Receive data from SIMOLINK, special data word 4	1 ≙ 1	Z122
K7105	Receive data from SIMOLINK, special data word 5	1 ≙ 1	Z122
K7106	Receive data from SIMOLINK, special data word 6	1 ≙ 1	Z122
K7107	Receive data from SIMOLINK, special data word 7	1 ≙ 1	Z122
K7108	Receive data from SIMOLINK, special data word 8	1 ≙ 1	Z122
KK7131	Receive data from SIMOLINK, special data word 1 and 2 [SW 2.0 and later]	1 ≙ 1	Z124
KK7132	Receive data from SIMOLINK, special data word 2 and 3 [SW 2.0 and later]	1 ≙ 1	Z124
KK7133	Receive data from SIMOLINK, special data word 3 and 4 [SW 2.0 and later]	1 ≙ 1	Z124
KK7134	Receive data from SIMOLINK, special data word 4 and 5 [SW 2.0 and later]	1 ≙ 1	Z124
KK7135	Receive data from SIMOLINK, special data word 5 and 6 [SW 2.0 and later]	1 ≙ 1	Z124
KK7136	Receive data from SIMOLINK, special data word 6 and 7 [SW 2.0 and later]	1 ≙ 1	Z124
KK7137	Receive data from SIMOLINK, special data word 7 and 8 [SW 2.0 and later]	1 ≙ 1	Z124

Process data exchange with 2nd CB			
K8001	Receive data from 2nd CB, word 1	1 ≙ 1	Z111
K8002	Receive data from 2nd CB, word 2	1 ≙ 1	Z111
K8003	Receive data from 2nd CB, word 3	1 ≙ 1	Z111
K8004	Receive data from 2nd CB, word 4	1 ≙ 1	Z111
K8005	Receive data from 2nd CB, word 5	1 ≙ 1	Z111
K8006	Receive data from 2nd CB, word 6	1 ≙ 1	Z111
K8007	Receive data from 2nd CB, word 7	1 ≙ 1	Z111
K8008	Receive data from 2nd CB, word 8	1 ≙ 1	Z111
K8009	Receive data from 2nd CB, word 9	1 ≙ 1	Z111
K8010	Receive data from 2nd CB, word 10	1 ≙ 1	Z111
K8011	Receive data from 2nd CB, word 11	1 ≙ 1	Z111
K8012	Receive data from 2nd CB, word 12	1 ≙ 1	Z111
K8013	Receive data from 2nd CB, word 13	1 ≙ 1	Z111
K8014	Receive data from 2nd CB, word 14	1 ≙ 1	Z111
K8015	Receive data from 2nd CB, word 15	1 ≙ 1	Z111

Connector	Description		Normalization	Function diag., Sheet
K8016	Receive data from 2nd CB, word 16		1 ≙ 1	Z111
K8020	Output of binector/connector converter for 2nd CB	[SW 1.9 and later]	1 ≙ 1	Z111
KK8031	Receive data from 2nd CB, word 1 and 2	[SW 2.0 and later]	1 ≙ 1	Z124
KK8032	Receive data from 2nd CB, word 2 and 3	[SW 2.0 and later]	1 ≙ 1	Z124
KK8033	Receive data from 2nd CB, word 3 and 4	[SW 2.0 and later]	1 ≙ 1	Z124
KK8034	Receive data from 2nd CB, word 4 and 5	[SW 2.0 and later]	1 ≙ 1	Z124
KK8035	Receive data from 2nd CB, word 5 and 6	[SW 2.0 and later]	1 ≙ 1	Z124
KK8036	Receive data from 2nd CB, word 6 and 7	[SW 2.0 and later]	1 ≙ 1	Z124
KK8037	Receive data from 2nd CB, word 7 and 8	[SW 2.0 and later]	1 ≙ 1	Z124
KK8038	Receive data from 2nd CB, word 8 and 9	[SW 2.0 and later]	1 ≙ 1	Z124
KK8039	Receive data from 2nd CB, word 9 and 10	[SW 2.0 and later]	1 ≙ 1	Z124
KK8040	Receive data from 2nd CB, word 10 and 11	[SW 2.0 and later]	1 ≙ 1	Z124
KK8041	Receive data from 2nd CB, word 11 and 12	[SW 2.0 and later]	1 ≙ 1	Z124
KK8042	Receive data from 2nd CB, word 12 and 13	[SW 2.0 and later]	1 ≙ 1	Z124
KK8043	Receive data from 2nd CB, word 13 and 14	[SW 2.0 and later]	1 ≙ 1	Z124
KK8044	Receive data from 2nd CB, word 14 and 15	[SW 2.0 and later]	1 ≙ 1	Z124
KK8045	Receive data from 2nd CB, word 15 and 16	[SW 2.0 and later]	1 ≙ 1	Z124

Serial interface 3 (USS3 / Peer-to-peer 3 on G-SST3)				
K9001	USS3 / Peer3 receive data, word 1		1 ≙ 1	G172, G174
K9002	USS3 / Peer3 receive data, word 2		1 ≙ 1	G172, G174
K9003	USS3 / Peer3 receive data, word 3		1 ≙ 1	G172, G174
K9004	USS3 / Peer3 receive data, word 4		1 ≙ 1	G172, G174
K9005	USS3 / Peer3 receive data, word 5		1 ≙ 1	G172, G174
K9006	USS3 receive data, word 6		1 ≙ 1	G172
K9007	USS3 receive data, word 7		1 ≙ 1	G172
K9008	USS3 receive data, word 8		1 ≙ 1	G172
K9009	USS3 receive data, word 9		1 ≙ 1	G172
K9010	USS3 receive data, word 10		1 ≙ 1	G172
K9011	USS3 receive data, word 11		1 ≙ 1	G172
K9012	USS3 receive data, word 12		1 ≙ 1	G172
K9013	USS3 receive data, word 13		1 ≙ 1	G172
K9014	USS3 receive data, word 14		1 ≙ 1	G172
K9015	USS3 receive data, word 15		1 ≙ 1	G172
K9016	USS3 receive data, word 16		1 ≙ 1	G172
K9020	Output of binector/connector converter for G-SST3		1 ≙ 1	G172, G174
KK9081	USS3 / Peer3 receive data, word 1 and 2	[SW 2.0 and later]	1 ≙ 1	G169
KK9082	USS3 / Peer3 receive data, word 2 and 3	[SW 2.0 and later]	1 ≙ 1	G169
KK9083	USS3 / Peer3 receive data, word 3 and 4	[SW 2.0 and later]	1 ≙ 1	G169
KK9084	USS3 / Peer3 receive data, word 4 and 5	[SW 2.0 and later]	1 ≙ 1	G169
KK9085	USS3 receive data, word 5 and 6	[SW 2.0 and later]	1 ≙ 1	G169
KK9086	USS3 receive data, word 6 and 7	[SW 2.0 and later]	1 ≙ 1	G169
KK9087	USS3 receive data, word 7 and 8	[SW 2.0 and later]	1 ≙ 1	G169
KK9088	USS3 receive data, word 8 and 9	[SW 2.0 and later]	1 ≙ 1	G169
KK9089	USS3 receive data, word 9 and 10	[SW 2.0 and later]	1 ≙ 1	G169
KK9090	USS2 receive data, word 10 and 11	[SW 2.0 and later]	1 ≙ 1	G169
KK9091	USS3 receive data, word 11 and 12	[SW 2.0 and later]	1 ≙ 1	G169
KK9092	USS3 receive data, word 12 and 13	[SW 2.0 and later]	1 ≙ 1	G169
KK9093	USS3 receive data, word 13 and 14	[SW 2.0 and later]	1 ≙ 1	G169
KK9094	USS3 receive data, word 14 and 15	[SW 2.0 and later]	1 ≙ 1	G169

Connector	Description		Normalization	Function diag., Sheet
KK9095	USS3 receive data, word 15 and 16	[SW 2.0 and later]	1 ≙ 1	G169

Technology software S00: Binector/connector converters				
K9113	Output of binector/connector converter 1	FB 13	1 ≙ 1	B3
K9114	Output of binector/connector converter 2	FB 14	1 ≙ 1	B3
K9115	Output of binector/connector converter 3	FB 14	1 ≙ 1	B3

Technology software S00: Adders / Subtracters				
K9120	Output of adder/subtracter 1	FB 20	16384 ≙ 100%	B125
K9121	Output of adder/subtracter 2	FB 21	16384 ≙ 100%	B125
K9122	Output of adder/subtracter 3	FB 22	16384 ≙ 100%	B125
K9123	Output of adder/subtracter 4	FB 23	16384 ≙ 100%	B125
K9124	Output of adder/subtracter 5	FB 24	16384 ≙ 100%	B125
K9125	Output of adder/subtracter 6	FB 25	16384 ≙ 100%	B125
K9126	Output of adder/subtracter 7	FB 26	16384 ≙ 100%	B125
K9127	Output of adder/subtracter 8	FB 27	16384 ≙ 100%	B125
K9128	Output of adder/subtracter 9	FB 28	16384 ≙ 100%	B125
K9129	Output of adder/subtracter 10	FB 29	16384 ≙ 100%	B125
K9130	Output of adder/subtracter 11	FB 30	16384 ≙ 100%	B125
K9131	Output of adder/subtracter 12	FB 31	16384 ≙ 100%	B125
K9132	Output of adder/subtracter 13 [SW 1.8 and later]	FB 32	16384 ≙ 100%	B125
K9133	Output of adder/subtracter 14 [SW 1.8 and later]	FB 33	16384 ≙ 100%	B125
K9134	Output of adder/subtracter 15 [SW 1.8 and later]	FB 34	16384 ≙ 100%	B125

Technology software S00: Sign inverters, switchable sign inverters				
K9135	Output of sign inverter 1	FB 35	16384 ≙ 100%	B125
K9136	Output of sign inverter 2	FB 36	16384 ≙ 100%	B125
K9137	Output of sign inverter 3	FB 37	16384 ≙ 100%	B125
K9138	Output of sign inverter 4	FB 38	16384 ≙ 100%	B125
K9140	Output of switchable sign inverter 1	FB 40	16384 ≙ 100%	B125
K9141	Output of switchable sign inverter 2	FB 41	16384 ≙ 100%	B125

Technology software S00: Dividers, multipliers, high-resolution multipliers/dividers				
K9142	Output of divider 4 [SW 1.8 and later]	FB 42	16384 ≙ 100%	B131
K9143	Output of divider 5 [SW 1.8 and later]	FB 43	16384 ≙ 100%	B131
K9144	Output of divider 6 [SW 1.8 and later]	FB 44	16384 ≙ 100%	B131
K9145	Output of divider 1	FB 45	16384 ≙ 100%	B131
K9146	Output of divider 2	FB 46	16384 ≙ 100%	B131
K9147	Output of divider 3	FB 47	16384 ≙ 100%	B131
K9150	Output of multiplier 1	FB 50	16384 ≙ 100%	B130
K9151	Output of multiplier 2	FB 51	16384 ≙ 100%	B130
K9152	Output of multiplier 3	FB 52	16384 ≙ 100%	B130
K9153	Output of multiplier 4	FB 53	16384 ≙ 100%	B130
K9155	Output of high-resolution multiplier/divider 1	FB 55	16384 ≙ 100%	B131
K9156	Output of high-resolution multiplier/divider 2	FB 56	16384 ≙ 100%	B131
K9157	Output of high-resolution multiplier/divider 3	FB 57	16384 ≙ 100%	B131

Technology software S00: Absolute-value generator with filter				
K9160	Output of absolute-value generator with filter 1	FB 60	16384 ≙ 100%	B135
K9161	Output of absolute-value generator with filter 2	FB 61	16384 ≙ 100%	B135

Connector	Description			Normalization	Function diag., Sheet
K9162	Output of absolute-value generator with filter 3		FB 62	16384 ≙ 100%	B135
K9163	Output of absolute-value generator with filter 4		FB 63	16384 ≙ 100%	B135
Technology software S00: Limiters					
K9165	Limiter 1: Fixed limiting value		FB 65	16384 ≙ 100%	B135
K9166	Limiter 1: Positive limiting value * (-1)		FB 65	16384 ≙ 100%	B135
K9167	Limiter 1: Output		FB 65	16384 ≙ 100%	B135
K9168	Limiter 2: Fixed limiting value		FB 66	16384 ≙ 100%	B135
K9169	Limiter 2: Positive limiting value * (-1)		FB 66	16384 ≙ 100%	B135
K9170	Limiter 2: Output		FB 66	16384 ≙ 100%	B135
K9171	Limiter 3: Fixed limiting value		FB 67	16384 ≙ 100%	B135
K9172	Limiter 3: Positive limiting value * (-1)		FB 67	16384 ≙ 100%	B135
K9173	Limiter 3: Output		FB 67	16384 ≙ 100%	B135
K9174	Limiter 4: Fixed limiting value	[SW 2.0 and later]	FB 212	16384 ≙ 100%	B134
K9175	Limiter 4: Positive limiting value * (-1)	[SW 2.0 and later]	FB 212	16384 ≙ 100%	B134
K9176	Limiter 4: Output	[SW 2.0 and later]	FB 212	16384 ≙ 100%	B134
K9177	Limiter 5: Fixed limiting value	[SW 2.0 and later]	FB 213	16384 ≙ 100%	B134
K9178	Limiter 5: Positive limiting value * (-1)	[SW 2.0 and later]	FB 213	16384 ≙ 100%	B134
K9179	Limiter 5: Output	[SW 2.0 and later]	FB 213	16384 ≙ 100%	B134
Technology software S00: Limit-value monitor with filter					
K9180	Limit-value monitor with filter 1: Filtered input quantity		FB 70	16384 ≙ 100%	B136
K9181	Limit-value monitor with filter 1: Fixed operating point		FB 70	16384 ≙ 100%	B136
K9182	Limit-value monitor with filter 2: Filtered input quantity		FB 71	16384 ≙ 100%	B136
K9183	Limit-value monitor with filter 2: Fixed operating point		FB 71	16384 ≙ 100%	B136
K9184	Limit-value monitor with filter 3: Filtered input quantity		FB 72	16384 ≙ 100%	B136
K9185	Limit-value monitor with filter 3: Fixed operating point		FB 72	16384 ≙ 100%	B136
Technology software S00: Limit-value monitor without filter					
K9186	Limit-value monitor without filter 1: Fixed operating point		FB 73	16384 ≙ 100%	B137
K9187	Limit-value monitor without filter 2: Fixed operating point		FB 74	16384 ≙ 100%	B137
K9188	Limit-value monitor without filter 3: Fixed operating point		FB 75	16384 ≙ 100%	B137
K9189	Limit-value monitor without filter 4: Fixed operating point		FB 76	16384 ≙ 100%	B137
K9190	Limit-value monitor without filter 5: Fixed operating point		FB 77	16384 ≙ 100%	B138
K9191	Limit-value monitor without filter 6: Fixed operating point		FB 78	16384 ≙ 100%	B138
K9192	Limit-value monitor without filter 7: Fixed operating point		FB 79	16384 ≙ 100%	B138
Technology software S00: Minimum selection, maximum selection					
K9193	Minimum selection output		FB 80	16384 ≙ 100%	B140
K9194	Maximum selection output		FB 81	16384 ≙ 100%	B140
Technology software S00: Tracking/storage elements					
K9195	Output of tracking/storage element 1		FB 82	16384 ≙ 100%	B145
K9196	Output of tracking/storage element 2		FB 83	16384 ≙ 100%	B145
Technology software S00: Connector memories					
K9197	Output connector memory 1		FB 84	16384 ≙ 100%	B145
K9198	Output connector memory 2		FB 85	16384 ≙ 100%	B145

Connector	Description		Normalization	Function diag., Sheet
Technology software S00: Connector changeover switches				
K9210	Output connector changeover switch 1	FB 90	16384 ≙ 100%	B150
K9211	Output connector changeover switch 2	FB 91	16384 ≙ 100%	B150
K9212	Output connector changeover switch 3	FB 92	16384 ≙ 100%	B150
K9213	Output connector changeover switch 4	FB 93	16384 ≙ 100%	B150
K9214	Output connector changeover switch 5	FB 94	16384 ≙ 100%	B150
K9215	Output connector changeover switch 6	FB 95	16384 ≙ 100%	B150
K9216	Output connector changeover switch 7	FB 96	16384 ≙ 100%	B150
K9217	Output connector changeover switch 8	FB 97	16384 ≙ 100%	B150
K9218	Output connector changeover switch 9	FB 98	16384 ≙ 100%	B150
K9219	Output connector changeover switch 10	FB 99	16384 ≙ 100%	B150
Technology software S00: Integrators				
K9220	Output of integrator 1	FB 100	16384 ≙ 100%	B155
K9221	Output of integrator 2	FB 101	16384 ≙ 100%	B155
K9222	Output of integrator 3	FB 102	16384 ≙ 100%	B155
Technology software S00: DT1 elements				
K9223	Output of DT1 element 1	FB 103	16384 ≙ 100%	B155
K9224	Output of DT1 element 1, inverted	FB 103	16384 ≙ 100%	B155
K9225	Output of DT1 element 2	FB 104	16384 ≙ 100%	B155
K9226	Output of DT1 element 2, inverted	FB 104	16384 ≙ 100%	B155
K9227	Output of DT1 element 3	FB 105	16384 ≙ 100%	B155
K9228	Output of DT1 element 3, inverted	FB 105	16384 ≙ 100%	B155
Technology software S00: Characteristic blocks				
K9229	Output of characteristic block 1	FB 106	16384 ≙ 100%	B160
K9230	Output of characteristic block 2	FB 107	16384 ≙ 100%	B160
K9231	Output of characteristic block 3	FB 108	16384 ≙ 100%	B160
Technology software S00: Dead zones				
K9232	Output of dead zone 1	FB 109	16384 ≙ 100%	B161
K9233	Output of dead zone 2	FB 110	16384 ≙ 100%	B161
K9234	Output of dead zone 3	FB 111	16384 ≙ 100%	B161
Technology software S00: Setpoint branching				
K9235	Setpoint branching output	FB 112	16384 ≙ 100%	B161
Technology software S00: Simple ramp-function generator				
K9236	Simple ramp-function generator output	FB 113	16384 ≙ 100%	B165
Technology software S00: Technology controller				
K9240	Technology controller, signed actual value	FB 114	16384 ≙ 100%	B170
K9241	Technology controller, absolute actual value	FB 114	16384 ≙ 100%	B170
K9242	D component	FB 114	16384 ≙ 100%	B170
K9243	Technology controller, setpoint	FB 114	16384 ≙ 100%	B170
K9244	Technology controller, filtered setpoint	FB 114	16384 ≙ 100%	B170
K9245	Setpoint/actual value deviation	FB 114	16384 ≙ 100%	B170
K9246	Setpoint/actual value deviation after droop	FB 114	16384 ≙ 100%	B170
K9247	P component	FB 114	16384 ≙ 100%	B170

Connector	Description		Normalization	Function diag., Sheet
K9248	I component	FB 114	16384 ≙ 100%	B170
K9249	Technology controller output before limitation	FB 114	16384 ≙ 100%	B170
K9250	Positive limit for technology controller output	FB 114	16384 ≙ 100%	B170
K9251	Negative limit for technology controller output	FB 114	16384 ≙ 100%	B170
K9252	Positive limit for technology controller output * (-1)	FB 114	16384 ≙ 100%	B170
K9253	Technology controller output after limitation	FB 114	16384 ≙ 100%	B170
K9254	Technology controller output after multiplication with weighting factor	FB 114	16384 ≙ 100%	B170

Technology software S00: Speed/velocity calculator, velocity/speed calculator				
K9256	Speed/velocity calculator: Actual velocity	FB 115	16384 ≙ 100%	B190
K9257	Velocity/speed calculator: Speed setpoint	FB 115	16384 ≙ 100%	B190

Technology software S00: Variable moment of inertia [SW 1.8 and later]			**FB 116**
K9258	Variable moment of inertia (output)	16384 ≙ 100%	B191

Technology software S00: Limiters					
K9260	Limiter 6: Fixed limiting value	[SW 2.0 and later]	FB 214	16384 ≙ 100%	B134
K9261	Limiter 6: Positive limiting value * (-1)	[SW 2.0 and later]	FB 214	16384 ≙ 100%	B134
K9262	Limiter 6: Output	[SW 2.0 and later]	FB 214	16384 ≙ 100%	B134

Technology software S00: Connector changeover switches					
K9265	Output connector changeover switch 11	[SW 2.0 and later]	FB 196	16384 ≙ 100%	B150
K9266	Output connector changeover switch 12	[SW 2.0 and later]	FB 197	16384 ≙ 100%	B150
K9267	Output connector changeover switch 13	[SW 2.0 and later]	FB 198	16384 ≙ 100%	B150
K9268	Output connector changeover switch 14	[SW 2.0 and later]	FB 199	16384 ≙ 100%	B150
K9269	Output connector changeover switch 15	[SW 2.0 and later]	FB 229	16384 ≙ 100%	B150

Technology software S00: PI controller 1 [SW 1.8 and later]			**FB260**
K9300	Input quantity filtered	16384 ≙ 100%	B180
K9301	P component	16384 ≙ 100%	B180
K9302	I component	16384 ≙ 100%	B180
K9303	Output PI controller before limitation	16384 ≙ 100%	B180
K9304	Output PI controller after limitation	16384 ≙ 100%	B180
K9305	Positive limit for the output of the PI controller	16384 ≙ 100%	B180
K9306	Positive limit for the output of the PI controller (K9305) ∗ -1	16384 ≙ 100%	B180
K9307	Negative limit for the output of the PI controller	16384 ≙ 100%	B180

Technology software S00: PI controller 2 [SW 1.8 and later]			**FB261**
K9310	Input quantity filtered	16384 ≙ 100%	B181
K9311	P component	16384 ≙ 100%	B181
K9312	I component	16384 ≙ 100%	B181
K9313	Output PI controller before limitation	16384 ≙ 100%	B181
K9314	Output PI controller after limitation	16384 ≙ 100%	B181
K9315	Positive limit for the output of the PI controller	16384 ≙ 100%	B181
K9316	Positive limit for the output of the PI controller (K9315) ∗ -1	16384 ≙ 100%	B181
K9317	Negative limit for the output of the PI controller	16384 ≙ 100%	B181

Technology software S00: PI controller 3 [SW 1.8 and later]			**FB262**
K9320	Input quantity filtered	16384 ≙ 100%	B182
K9321	P component	16384 ≙ 100%	B182

Connector	Description	Normalization	Function diag., Sheet
K9322	I component	16384 ≙ 100%	B182
K9323	Output PI controller before limitation	16384 ≙ 100%	B182
K9324	Output PI controller after limitation	16384 ≙ 100%	B182
K9325	Positive limit for the output of the PI controller	16384 ≙ 100%	B182
K9326	Positive limit for the output of the PI controller (K9325) ∗ -1	16384 ≙ 100%	B182
K9327	Negative limit for the output of the PI controller	16384 ≙ 100%	B182

Technology software S00: PI controller 4 [SW 1.8 and later]			**FB263**
K9330	Input quantity filtered	16384 ≙ 100%	B183
K9331	P component	16384 ≙ 100%	B183
K9332	I component	16384 ≙ 100%	B183
K9333	Output PI controller before limitation	16384 ≙ 100%	B183
K9334	Output PI controller after limitation	16384 ≙ 100%	B183
K9335	Positive limit for the output of the PI controller	16384 ≙ 100%	B183
K9336	Positive limit for the output of the PI controller (K9335) ∗ -1	16384 ≙ 100%	B183
K9337	Negative limit for the output of the PI controller	16384 ≙ 100%	B183

Technology software S00: PI controller 5 [SW 1.8 and later]			**FB264**
K9340	Input quantity filtered	16384 ≙ 100%	B184
K9341	P component	16384 ≙ 100%	B184
K9342	I component	16384 ≙ 100%	B184
K9343	Output PI controller before limitation	16384 ≙ 100%	B184
K9344	Output PI controller after limitation	16384 ≙ 100%	B184
K9345	Positive limit for the output of the PI controller	16384 ≙ 100%	B184
K9346	Positive limit for the output of the PI controller (K9345) ∗ -1	16384 ≙ 100%	B184
K9347	Negative limit for the output of the PI controller	16384 ≙ 100%	B184

Technology software S00: PI controller 6 [SW 1.8 and later]			**FB265**
K9350	Input quantity filtered	16384 ≙ 100%	B185
K9351	P component	16384 ≙ 100%	B185
K9352	I component	16384 ≙ 100%	B185
K9353	Output PI controller before limitation	16384 ≙ 100%	B185
K9354	Output PI controller after limitation	16384 ≙ 100%	B185
K9355	Positive limit for the output of the PI controller	16384 ≙ 100%	B185
K9356	Positive limit for the output of the PI controller (K9355) ∗ -1	16384 ≙ 100%	B185
K9357	Negative limit for the output of the PI controller	16384 ≙ 100%	B185

Technology software S00: PI controller 7 [SW 1.8 and later]			**FB266**
K9360	Input quantity filtered	16384 ≙ 100%	B186
K9361	P component	16384 ≙ 100%	B186
K9362	I component	16384 ≙ 100%	B186
K9363	Output PI controller before limitation	16384 ≙ 100%	B186
K9364	Output PI controller after limitation	16384 ≙ 100%	B186
K9365	Positive limit for the output of the PI controller	16384 ≙ 100%	B186
K9366	Positive limit for the output of the PI controller (K9365) ∗ -1	16384 ≙ 100%	B186
K9367	Negative limit for the output of the PI controller	16384 ≙ 100%	B186

Technology software S00: PI controller 8 [SW 1.8 and later]			**FB267**
K9370	Input quantity filtered	16384 ≙ 100%	B187
K9371	P component	16384 ≙ 100%	B187

Connector	Description	Normalization	Function diag., Sheet
K9372	I component	16384 ≙ 100%	B187
K9373	Output PI controller before limitation	16384 ≙ 100%	B187
K9374	Output PI controller after limitation	16384 ≙ 100%	B187
K9375	Positive limit for the output of the PI controller	16384 ≙ 100%	B187
K9376	Positive limit for the output of the PI controller (K9375) ∗ -1	16384 ≙ 100%	B187
K9377	Negative limit for the output of the PI controller	16384 ≙ 100%	B187

Technology software S00: PI controller 9 [SW 1.8 and later]			**FB268**
K9380	Input quantity filtered	16384 ≙ 100%	B188
K9381	P component	16384 ≙ 100%	B188
K9382	I component	16384 ≙ 100%	B188
K9383	Output PI controller before limitation	16384 ≙ 100%	B188
K9384	Output PI controller after limitation	16384 ≙ 100%	B188
K9385	Positive limit for the output of the PI controller	16384 ≙ 100%	B188
K9386	Positive limit for the output of the PI controller (K9385) ∗ -1	16384 ≙ 100%	B188
K9387	Negative limit for the output of the PI controller	16384 ≙ 100%	B188

Technology software S00: PI controller 10 [SW 1.8 and later]			**FB269**
K9390	Input quantity filtered	16384 ≙ 100%	B189
K9391	P component	16384 ≙ 100%	B189
K9392	I component	16384 ≙ 100%	B189
K9393	Output PI controller before limitation	16384 ≙ 100%	B189
K9394	Output PI controller after limitation	16384 ≙ 100%	B189
K9395	Positive limit for the output of the PI controller	16384 ≙ 100%	B189
K9396	Positive limit for the output of the PI controller (K9395) ∗ -1	16384 ≙ 100%	B189
K9397	Negative limit for the output of the PI controller	16384 ≙ 100%	B189

Technology software S00: Derivative/delay elements					
K9400	Derivative/delay element 1 output	[SW 1.8 and later]	FB 270	16384 ≙ 100%	B156
K9401	Derivative/delay element 2 output	[SW 1.8 and later]	FB 271	16384 ≙ 100%	B156
K9402	Derivative/delay element 3 output	[SW 1.8 and later]	FB 272	16384 ≙ 100%	B156
K9403	Derivative/delay element 4 output	[SW 1.8 and later]	FB 273	16384 ≙ 100%	B156
K9404	Derivative/delay element 5 output	[SW 1.8 and later]	FB 274	16384 ≙ 100%	B157
K9405	Derivative/delay element 6 output	[SW 1.8 and later]	FB 275	16384 ≙ 100%	B157
K9406	Derivative/delay element 7 output	[SW 1.8 and later]	FB 276	16384 ≙ 100%	B157
K9407	Derivative/delay element 8 output	[SW 1.8 and later]	FB 277	16384 ≙ 100%	B157
K9408	Derivative/delay element 9 output	[SW 1.8 and later]	FB 278	16384 ≙ 100%	B158
K9409	Derivative/delay element 10 output	[SW 1.8 and later]	FB 279	16384 ≙ 100%	B158

Technology software S00: Characteristic blocks					
K9410	Output characteristic block 4	[SW 1.8 and later]	FB 280	16384 ≙ 100%	B160
K9411	Output characteristic block 5	[SW 1.8 and later]	FB 281	16384 ≙ 100%	B160
K9412	Output characteristic block 6	[SW 1.8 and later]	FB 282	16384 ≙ 100%	B160
K9413	Output characteristic block 7	[SW 1.8 and later]	FB 283	16384 ≙ 100%	B160
K9414	Output characteristic block 8	[SW 1.8 and later]	FB 284	16384 ≙ 100%	B160
K9415	Output characteristic block 9	[SW 1.8 and later]	FB 285	16384 ≙ 100%	B160

Technology software S00: Multiplier					
K9430	Output multiplier 5	[SW 1.8 and later]	FB 290	16384 ≙ 100%	B130
K9431	Output multiplier 6	[SW 1.8 and later]	FB 291	16384 ≙ 100%	B130

Connector	Description			Normalization	Function diag., Sheet
K9432	Output multiplier 7	[SW 1.8 and later]	FB 292	16384 ≙ 100%	B130
K9433	Output multiplier 8	[SW 1.8 and later]	FB 293	16384 ≙ 100%	B130
K9434	Output multiplier 9	[SW 1.8 and later]	FB 294	16384 ≙ 100%	B130
K9435	Output multiplier 10	[SW 1.8 and later]	FB 295	16384 ≙ 100%	B130
K9436	Output multiplier 11	[SW 1.8 and later]	FB 296	16384 ≙ 100%	B130
K9437	Output multiplier 12	[SW 1.8 and later]	FB 297	16384 ≙ 100%	B130

S00 technology software: Software counter					
K9441	Minimum value for software counter	[SW 1.9 and later]	FB 89	1 ≙ 1	B196
K9442	Maximum value for software counter	[SW 1.9 and later]	FB 89	1 ≙ 1	B196
K9443	Setting value for software counter	[SW 1.9 and later]	FB 89	1 ≙ 1	B196
K9444	Start value for software counter	[SW 1.9 and later]	FB 89	1 ≙ 1	B196
K9445	Software counter output	[SW 1.9 and later]	FB 89	1 ≙ 1	B196

Technology software S00: Multiplexer					
K9450	Output multiplexer 1	[SW 1.8 and later]	FB 86	16384 ≙ 100%	B195
K9451	Output multiplexer 2	[SW 1.8 and later]	FB 87	16384 ≙ 100%	B195
K9452	Output multiplexer 3	[SW 1.8 and later]	FB 88	16384 ≙ 100%	B195

Technology software S00: Averagers					
K9455	Output averager 1	[SW 1.8 and later]	FB 16	16384 ≙ 100%	B139
K9456	Output averager 2	[SW 1.8 and later]	FB 17	16384 ≙ 100%	B139
K9457	Output averager 3	[SW 1.8 and later]	FB 18	16384 ≙ 100%	B139
K9458	Output averager 4	[SW 1.8 and later]	FB 19	16384 ≙ 100%	B139

Technology software S00: Minimum selections, Maximum selections					
K9460	Output Maximum selection 2	[SW 1.8 and later]	FB 174	16384 ≙ 100%	B140
K9461	Output Maximum selection 3	[SW 1.8 and later]	FB 175	16384 ≙ 100%	B140
K9462	Output Maximum selection 4	[SW 1.8 and later]	FB 176	16384 ≙ 100%	B140
K9463	Output Minimum selection 2	[SW 1.8 and later]	FB 177	16384 ≙ 100%	B140
K9464	Output Minimum selection 3	[SW 1.8 and later]	FB 178	16384 ≙ 100%	B140
K9465	Output Minimum selection 4	[SW 1.8 and later]	FB 179	16384 ≙ 100%	B140

Technology software S00: position fixed value, position actual value, positional deviation					
KK9471	Position fixed value1	[SW 2.0 and later]	FB 54	1 ≙ 1	B152
KK9472	Position fixed value2	[SW 2.0 and later]	FB 54	1 ≙ 1	B152
KK9473	Position fixed value3	[SW 2.0 and later]	FB 54	1 ≙ 1	B152
KK9474	Position fixed value4	[SW 2.0 and later]	FB 54	1 ≙ 1	B152
KK9481	Position actual value 1	[SW 2.0 and later]	FB 54	1 ≙ 1	B152
KK9482	Position actual value 2	[SW 2.0 and later]	FB 54	1 ≙ 1	B152
KK9483	Positional deviation	[SW 2.0 and later]	FB 54	1 ≙ 1	B152
K9484	Positional deviation limited	[SW 2.0 and later]	FB 54	1 ≙ 1	B152

Technology software S00: root extractor					
KK9485	Root extractor output	[SW 2.0 and later]	FB 58	16384 ≙ 100%	B153

S00 technology software: Adders / subtracters for double-word connectors					
KK9490	Output of 1st adder / subtracter	[SW 1.9 and later]	FB 48	16384*65536 ≙ 100%	B151
K9491	Output of 1st adder / subtracter (limited)	[SW 1.9 and later]	FB 48	16384 ≙ 100%/65536	B151
KK9492	Output of 2nd adder / subtracter	[SW 1.9 and later]	FB 49	16384*65536 ≙ 100%	B151

Connector	Description			Normalization	Function diag., Sheet
K9493	Output of 2nd adder / subtracter (limited)	[SW 1.9 and later]	FB 49	16384 ≙ 100%/65536	B151

S00 technology software: Connector type converters					
KK9498	Output of 1st connector type converter	[SW 1.9 and later]	FB 298	16384*65536 ≙ 100%	B151
KK9499	Output of 2nd connector type converter	[SW 1.9 and later]	FB 299	16384*65536 ≙ 100%	B151

Technology software S00: Fixed values			[SW 1.8 and later]
K9501	Fixed value 1 (U099.01)	[SW 1.8 and later]	16384 ≙ 100%	B110
K9502	Fixed value 2 (U099.02)	[SW 1.8 and later]	16384 ≙ 100%	B110
K9503	Fixed value 3 (U099.03)	[SW 1.8 and later]	16384 ≙ 100%	B110
K9504	Fixed value 4 (U099.04)	[SW 1.8 and later]	16384 ≙ 100%	B110
K9505	Fixed value 5 (U099.05)	[SW 1.8 and later]	16384 ≙ 100%	B110
K9506	Fixed value 6 (U099.06)	[SW 1.8 and later]	16384 ≙ 100%	B110
K9507	Fixed value 7 (U099.07)	[SW 1.8 and later]	16384 ≙ 100%	B110
K9508	Fixed value 8 (U099.08)	[SW 1.8 and later]	16384 ≙ 100%	B110
K9509	Fixed value 9 (U099.09)	[SW 1.8 and later]	16384 ≙ 100%	B110
K9510	Fixed value 10 (U099.10)	[SW 1.8 and later]	16384 ≙ 100%	B110
K9511	Fixed value 11 (U099.11)	[SW 1.8 and later]	16384 ≙ 100%	B110
K9512	Fixed value 12 (U099.12)	[SW 1.8 and later]	16384 ≙ 100%	B110
K9513	Fixed value 13 (U099.13)	[SW 1.8 and later]	16384 ≙ 100%	B110
K9514	Fixed value 14 (U099.14)	[SW 1.8 and later]	16384 ≙ 100%	B110
K9515	Fixed value 15 (U099.15)	[SW 1.8 and later]	16384 ≙ 100%	B110
K9516	Fixed value 16 (U099.16)	[SW 1.8 and later]	16384 ≙ 100%	B110
K9517	Fixed value 17 (U099.17)	[SW 1.8 and later]	16384 ≙ 100%	B110
K9518	Fixed value 18 (U099.18)	[SW 1.8 and later]	16384 ≙ 100%	B110
K9519	Fixed value 19 (U099.19)	[SW 1.8 and later]	16384 ≙ 100%	B110
K9520	Fixed value 20 (U099.20)	[SW 1.8 and later]	16384 ≙ 100%	B110
K9521	Fixed value 21 (U099.21)	[SW 1.8 and later]	16384 ≙ 100%	B110
K9522	Fixed value 22 (U099.22)	[SW 1.8 and later]	16384 ≙ 100%	B110
K9523	Fixed value 23 (U099.23)	[SW 1.8 and later]	16384 ≙ 100%	B110
K9524	Fixed value 24 (U099.24)	[SW 1.8 and later]	16384 ≙ 100%	B110
K9525	Fixed value 25 (U099.25)	[SW 1.8 and later]	16384 ≙ 100%	B110
K9526	Fixed value 26 (U099.26)	[SW 1.8 and later]	16384 ≙ 100%	B110
K9527	Fixed value 27 (U099.27)	[SW 1.8 and later]	16384 ≙ 100%	B110
K9528	Fixed value 28 (U099.28)	[SW 1.8 and later]	16384 ≙ 100%	B110
K9529	Fixed value 29 (U099.29)	[SW 1.8 and later]	16384 ≙ 100%	B110
K9530	Fixed value 30 (U099.30)	[SW 1.8 and later]	16384 ≙ 100%	B110
K9531	Fixed value 31 (U099.31)	[SW 1.8 and later]	16384 ≙ 100%	B110
K9532	Fixed value 32 (U099.32)	[SW 1.8 and later]	16384 ≙ 100%	B110
K9533	Fixed value 33 (U099.33)	[SW 1.8 and later]	16384 ≙ 100%	B110
K9534	Fixed value 34 (U099.34)	[SW 1.8 and later]	16384 ≙ 100%	B110
K9535	Fixed value 35 (U099.35)	[SW 1.8 and later]	16384 ≙ 100%	B110
K9536	Fixed value 36 (U099.36)	[SW 1.8 and later]	16384 ≙ 100%	B110
K9537	Fixed value 37 (U099.37)	[SW 1.8 and later]	16384 ≙ 100%	B110
K9538	Fixed value 38 (U099.38)	[SW 1.8 and later]	16384 ≙ 100%	B110
K9539	Fixed value 39 (U099.39)	[SW 1.8 and later]	16384 ≙ 100%	B110
K9540	Fixed value 40 (U099.40)	[SW 1.8 and later]	16384 ≙ 100%	B110
K9541	Fixed value 41 (U099.41)	[SW 1.8 and later]	16384 ≙ 100%	B110
K9542	Fixed value 42 (U099.42)	[SW 1.8 and later]	16384 ≙ 100%	B110
K9543	Fixed value 43 (U099.43)	[SW 1.8 and later]	16384 ≙ 100%	B110

Connector	Description	Normalization	Function diag., Sheet
K9544	Fixed value 44 (U099.44) [SW 1.8 and later]	16384 ≙ 100%	B110
K9545	Fixed value 45 (U099.45) [SW 1.8 and later]	16384 ≙ 100%	B110
K9546	Fixed value 46 (U099.46) [SW 1.8 and later]	16384 ≙ 100%	B110
K9547	Fixed value 47 (U099.47) [SW 1.8 and later]	16384 ≙ 100%	B110
K9548	Fixed value 48 (U099.48) [SW 1.8 and later]	16384 ≙ 100%	B110
K9549	Fixed value 49 (U099.49) [SW 1.8 and later]	16384 ≙ 100%	B110
K9550	Fixed value 50 (U099.50) [SW 1.8 and later]	16384 ≙ 100%	B110
K9551	Fixed value 51 (U099.51) [SW 1.8 and later]	16384 ≙ 100%	B110
K9552	Fixed value 52 (U099.52) [SW 1.8 and later]	16384 ≙ 100%	B110
K9553	Fixed value 53 (U099.53) [SW 1.8 and later]	16384 ≙ 100%	B110
K9554	Fixed value 54 (U099.54) [SW 1.8 and later]	16384 ≙ 100%	B110
K9555	Fixed value 55 (U099.55) [SW 1.8 and later]	16384 ≙ 100%	B110
K9556	Fixed value 56 (U099.56) [SW 1.8 and later]	16384 ≙ 100%	B110
K9557	Fixed value 57 (U099.57) [SW 1.8 and later]	16384 ≙ 100%	B110
K9558	Fixed value 58 (U099.58) [SW 1.8 and later]	16384 ≙ 100%	B110
K9559	Fixed value 59 (U099.59) [SW 1.8 and later]	16384 ≙ 100%	B110
K9560	Fixed value 60 (U099.60) [SW 1.8 and later]	16384 ≙ 100%	B110
K9561	Fixed value 61 (U099.61) [SW 1.8 and later]	16384 ≙ 100%	B110
K9562	Fixed value 62 (U099.62) [SW 1.8 and later]	16384 ≙ 100%	B110
K9563	Fixed value 63 (U099.63) [SW 1.8 and later]	16384 ≙ 100%	B110
K9564	Fixed value 64 (U099.64) [SW 1.8 and later]	16384 ≙ 100%	B110
K9565	Fixed value 65 (U099.65) [SW 1.8 and later]	16384 ≙ 100%	B110
K9566	Fixed value 66 (U099.66) [SW 1.8 and later]	16384 ≙ 100%	B110
K9567	Fixed value 67 (U099.67) [SW 1.8 and later]	16384 ≙ 100%	B110
K9568	Fixed value 68 (U099.68) [SW 1.8 and later]	16384 ≙ 100%	B110
K9569	Fixed value 69 (U099.69) [SW 1.8 and later]	16384 ≙ 100%	B110
K9570	Fixed value 70 (U099.70) [SW 1.8 and later]	16384 ≙ 100%	B110
K9571	Fixed value 71 (U099.71) [SW 1.8 and later]	16384 ≙ 100%	B110
K9572	Fixed value 72 (U099.72) [SW 1.8 and later]	16384 ≙ 100%	B110
K9573	Fixed value 73 (U099.73) [SW 1.8 and later]	16384 ≙ 100%	B110
K9574	Fixed value 74 (U099.74) [SW 1.8 and later]	16384 ≙ 100%	B110
K9575	Fixed value 75 (U099.75) [SW 1.8 and later]	16384 ≙ 100%	B110
K9576	Fixed value 76 (U099.76) [SW 1.8 and later]	16384 ≙ 100%	B110
K9577	Fixed value 77 (U099.77) [SW 1.8 and later]	16384 ≙ 100%	B110
K9578	Fixed value 78 (U099.78) [SW 1.8 and later]	16384 ≙ 100%	B110
K9579	Fixed value 79 (U099.79) [SW 1.8 and later]	16384 ≙ 100%	B110
K9580	Fixed value 80 (U099.80) [SW 1.8 and later]	16384 ≙ 100%	B110
K9581	Fixed value 81 (U099.81) [SW 1.8 and later]	16384 ≙ 100%	B110
K9582	Fixed value 82 (U099.82) [SW 1.8 and later]	16384 ≙ 100%	B110
K9583	Fixed value 83 (U099.83) [SW 1.8 and later]	16384 ≙ 100%	B110
K9584	Fixed value 84 (U099.84) [SW 1.8 and later]	16384 ≙ 100%	B110
K9585	Fixed value 85 (U099.85) [SW 1.8 and later]	16384 ≙ 100%	B110
K9586	Fixed value 86 (U099.86) [SW 1.8 and later]	16384 ≙ 100%	B110
K9587	Fixed value 87 (U099.87) [SW 1.8 and later]	16384 ≙ 100%	B110
K9588	Fixed value 88 (U099.88) [SW 1.8 and later]	16384 ≙ 100%	B110
K9589	Fixed value 89 (U099.89) [SW 1.8 and later]	16384 ≙ 100%	B110
K9590	Fixed value 90 (U099.90) [SW 1.8 and later]	16384 ≙ 100%	B110
K9591	Fixed value 91 (U099.91) [SW 1.8 and later]	16384 ≙ 100%	B110
K9592	Fixed value 92 (U099.92) [SW 1.8 and later]	16384 ≙ 100%	B110

Connector	Description	Normalization	Function diag., Sheet
K9593	Fixed value 93 (U099.93) [SW 1.8 and later]	16384 ≙ 100%	B110
K9594	Fixed value 94 (U099.94) [SW 1.8 and later]	16384 ≙ 100%	B110
K9595	Fixed value 95 (U099.95) [SW 1.8 and later]	16384 ≙ 100%	B110
K9596	Fixed value 96 (U099.96) [SW 1.8 and later]	16384 ≙ 100%	B110
K9597	Fixed value 97 (U099.97) [SW 1.8 and later]	16384 ≙ 100%	B110
K9598	Fixed value 98 (U099.98) [SW 1.8 and later]	16384 ≙ 100%	B110
K9599	Fixed value 99 (U099.99) [SW 1.8 and later]	16384 ≙ 100%	B110
K9600	Fixed value 100 (U099.100) [SW 1.8 and later]	16384 ≙ 100%	B110

General connectors			
K9801	Alarm word 1 (= parameter r953)		
K9802	Alarm word 2 (= parameter r954)		
K9803	Alarm word 3 (= parameter r955)		
K9804	Alarm word 4 (= parameter r956)		
K9805	Alarm word 5 (= parameter r957)		
K9806	Alarm word 6 (= parameter r958)		
K9807	Alarm word 7 (= parameter r959)		
K9808	Alarm word 8 (= parameter r960)		
K9811	Fault number 1 (= parameter r947.01, last fault number)		G189
K9812	Fault number 2 (= parameter r947.09, second last fault number)		G189
K9813	Fault number 3 (= parameter r947.17, third last fault number)		G189
K9814	Fault number 4 (= parameter r947.25, fourth last fault number)		G189
K9815	Fault number 5 (= parameter r947.33)		G189
K9816	Fault number 6 (= parameter r947.41)		G189
K9817	Fault number 7 (= parameter r947.49)		G189
K9818	Fault number 8 (= parameter r947.57)		G189

K9990	Current total processor capacity utilization (C163/C165) (= parameter n009.01)		
K9991	Projected total processor capacity utilization (C163/C165) for line frequency = 65Hz (= parameter n009.02)		
K9992	Current total processor capacity (C163/C165) utilized by background routines (= parameter n009.03)		
K9993	Current total processor capacity (C163/C165) utilized by routines in foreground cycle 4 (= parameter n009.04)		
K9994	Current total processor capacity (C163/C165) utilized by routines in foreground cycle 2 (= parameter n009.05)		
K9995	Current total processor capacity (C163/C165) utilized by routines in foreground cycle 1 (= parameter n009.06)		
K9999	Output of binary connector converter for DriveMonitor Trace function		

12.2 Binector list

The states of binectors can be displayed via parameters r045 and P046.

Binector	Name, description	Function diag., Sheet
Fixed values		
B0000	Fixed value 0	G120
B0001	Fixed value 1	G120

Binary inputs, terminals 36 to 43		
B0010	Status of terminal 36	G110
B0011	Status of terminal 36, inverted	G110
B0012	Status of terminal 37	G110
B0013	Status of terminal 37, inverted	G110
B0014	Status of terminal 38	G110
B0015	Status of terminal 38, inverted	G110
B0016	Status of terminal 39	G110
B0017	Status of terminal 39, inverted	G110
B0018	Status of terminal 40	G110
B0019	Status of terminal 40, inverted	G110
B0020	Status of terminal 41	G110
B0021	Status of terminal 41, inverted	G110
B0022	Status of terminal 42	G110
B0023	Status of terminal 42, inverted	G110
B0024	Status of terminal 43	G110
B0025	Status of terminal 43, inverted	G110

Binary inputs, terminals 211 to 214		
B0040	Status of terminal 211	G186
B0041	Status of terminal 211, inverted	G186
B0042	Status of terminal 212	G186
B0043	Status of terminal 212, inverted	G186
B0044	Status of terminal 213	G186
B0045	Status of terminal 213, inverted	G186
B0046	Status of terminal 214	G186
B0047	Status of terminal 214, inverted	G186

Analog inputs		
B0050	Analog input, terminal 4: 1 = Open circuit ($i \leq 2$ mA)	G113
B0051	Analog input, terminal 6: 1 = Open circuit ($i \leq 2$ mA)	G113

Pulse encoder evaluation		
B0052	Fault in digital speed sensing circuit	G145
B0053	Underflow of actual position value [SW 1.9 and later] This binector changes to 1 when connector KK0046 (actual position value extended in software to a 32-bit value) counts from value 8000 0000H (= -2^{31}) to value 7FFF FFFFH (= $+2^{31}-1$). Binector B0053 does not change back to 0 until connector KK0046 assumes a value other than 7FFF FFFFH (= $+2^{31}-1$) again.	G145
B0054	Overrflow of actual position value [SW 1.9 and later] This binector changes to 1 when connector KK0046 (actual position value extended in software to a 32-bit value) counts from value 7FFF FFFFH (= $+2^{31}-1$) to value 8000 0000H (= -2^{31}). Binector B0054 does not change back to 0 until connector KK0046 assumes a value other than 8000 0000H (= -2^{31}) again.	G145

Binector	Name, description	Function diag., Sheet
Evaluation of the pulse encoder board SBP		
B0055	Position acquisition of SBP, underflow [SW 2.0 and later]	Z120
B0056	Position acquisition of SBP, overflow [SW 2.0 and later]	Z120

Status word 1		
B0100	Stat.word 1, bit 0: 0=not ready to switch on, 1=ready to switch on	G182
B0101	Stat.word 1, bit 0 inverted	G182
B0102	Stat.word 1, bit 1: 0=not ready, 1=ready (pulses disabled)	G182
B0103	Stat.word 1, bit 1 inverted	G182
B0104	Stat.word 1, bit 2: 0=pulses disabled, 1=Run (output terminals energized)	G182
B0105	Stat.word 1, bit 2 inverted	G182
B0106	Stat.word 1, bit 3: 0=no active fault, 1=active fault (pulses disabled)	G182
B0107	Stat.word 1, bit 3 inverted	G182
B0108	Stat.word 1, bit 4: 0=OFF2 active, 1=no active OFF2	G182
B0109	Stat.word 1, bit 4 inverted	G182
B0110	Stat.word 1, bit 5: 0=OFF3 active, 1=no active OFF3	G182
B0111	Stat.word 1, bit 5 inverted	G182
B0112	Stat.word 1, bit 6: 0=no starting lockout (unit can be switched on), 1=starting lockout active	G182
B0113	Stat.word 1, bit 6 inverted	G182
B0114	Stat.word 1, bit 7: 0=no active alarm, 1=alarm active	G182
B0115	Stat.word 1, bit 7 inverted	G182
B0116	Stat.word 1, bit 8: 0=setp./act. val. deviation detected, 1=no setp./act. val. deviation	G182
B0117	Stat.word 1, bit 8 inverted	G182
B0120	Stat.word 1, bit 10: 0=comparison setpoint not reached, 1=comparison setpoint reached	G182
B0121	Stat.word 1, bit 10 inverted	G182
B0122	Stat.word 1, bit 11: 0=undervoltage fault not active, 1=undervoltage fault active	G182
B0123	Stat.word 1, bit 11 inverted	G182
B0124	Stat.word 1, bit 12: 0=main contactor request not active, 1=request to energize main contactor active	G182
B0125	Stat.word 1, bit 12 inverted	G182
B0126	Stat.word 1, bit 13: 0=ramp-function generator not active, 1=ramp-function generator active	G182
B0127	Stat.word 1, bit 13 inverted	G182
B0128	Stat.word 1, bit 14: 0=negative speed setpoint, 1=positive speed setpoint	G182
B0129	Stat.word 1, bit 14 inverted	G182

Status word 2		
B0136	Stat.word 2, bit 18: 0=overspeed, 1=no overspeed	G183
B0137	Stat.word 2, bit 18 inverted	G183
B0138	Stat.word 2, bit 19: 0=no external fault 1 active, 1=external fault 1 active	G183
B0139	Stat.word 2, bit 19 inverted	G183
B0140	Stat.word 2, bit 20: 0=no external fault 2 active, 1=external fault 2 active	G183
B0141	Stat.word 2, bit 20 inverted	G183
B0142	Stat.word 2, bit 21: 0=no external alarm active, 1=external alarm active	G183
B0143	Stat.word 2, bit 21 inverted	G183
B0144	Stat.word 2, bit 22: 0=no overload alarm active, 1=overload alarm active	G183
B0145	Stat.word 2, bit 22 inverted	G183
B0146	Stat.word 2, bit 23: 0=no overtemperature fault active, 1=overtemperature fault active	G183
B0147	Stat.word 2, bit 23 inverted	G183
B0148	Stat.word 2, bit 24: 0=no overtemperature alarm active, 1=overtemperature alarm active	G183
B0149	Stat.word 2, bit 24 inverted	G183
B0150	Stat.word 2, bit 25: 0=no motor overtemperature alarm active, 1=motor overtemperature alarm active	G183

Binector	Name, description	Function diag., Sheet
B0151	Stat.word 2, bit 25 inverted	G183
B0152	Stat.word 2, bit 26: 0=no motor overtemperature fault active, 1=motor overtemperature fault active	G183
B0153	Stat.word 2, bit 26 inverted	G183
B0156	Stat.word 2, bit 28: 0=no motor blocked fault active, 1=motor blocked fault active	G183

Messages		
B0160	0=AUS1 or AUS3 active, 1=no AUS1 and no AUS3 is pending	G180
B0161	B0160 inverted	G180
B0164	1 = n < n_{min}	G188
B0165	B0164 inverted	G188
B0166	1 = Voltage at power section is active	
B0167	B0166 inverted	
B0170	1=Voltage at power section AND operating state <= o7	G119
B0171	B0170 inverted	G119
B0172	Output of "Setpoint-actual value deviation 2" signal [SW 1.9 and later]	G187
B0173	B0172 inverted [SW 1.9 and later]	G187

Acknowledgement of fault codes [SW 2.1 and later]		
B0179	Acknowledgement of control word or P key on PMU (pulse)	G180

Binary inputs		
B0180	1=Terminal 211 not activated for more than 10 s.	G186
B0181	1=Terminal 212 activated for more than 2 s.	G186
B0182	1=Terminal 213 not activated for more than 40 s while in operating state < o6	G186
B0183	1=Terminal 214 not activated for more than 10 s.	G186

Temperature sensor inputs		
B0184	1=Alarm motor temperature 1	G185
B0185	1=Alarm motor temperature 2	G185

Alarm messages		
B0186	1=Alarm A037 (I2t motor) active	
B0187	1=Alarm A039 (I2t power section) active	
B0188	1=Alarm A067 (heatsink temperature) active	
B0189	1=Alarm A067 (converter fan) active	

Torque limitation, current limitation, current controller		
B0190	0 = pulsating current, 1 = continuous current [SW 2.0 and later]	G162
B0192	Speed limitation controller: Positive speed limit reached [SW 1.8 and later]	G160
B0193	Speed limitation controller: Negative speed limit reached [SW 1.8 and later]	G160
B0194	Current limitation: Positive current limit reached [SW 1.8 and later]	G161
B0195	Current limitation: Negative current limit reached [SW 1.8 and later]	G161
B0198	Any positive limit (speed, torque, current) reached [SW 2.0 and later]	
B0199	Any positive limit (speed, torque, current) reached [SW 2.0 and later]	
B0200	Current limitation active	G161
B0201	Speed limiting controller active	G160
B0202	Upper torque limitation active	G160
B0203	Lower torque limitation active	G160
B0204	Torque or current limitation active or current controller at limitation	G163

Binector	Name, description	Function diag., Sheet
Speed controller		
B0205	Speed controller enabling by sequencing control	G152

Setpoint processing, ramp-function generator		
B0206	Limitation after ramp-function generator (setpoint limitation) has responded	G137
B0207	Ramp-function generator output = 0 (y = 0)	G136
B0208	Ramp-function generator, ramp-up	G136
B0209	Ramp-function generator, ramp-down	G136
B0210	1 = no direction of rotation enabled	G135
B0211	Ramp-function generator: Enable setpoint (1 = setpoint enabled)	G136

Torque limitation		
B0212	“Zero delay-angle” command	G160

Gating unit			
B0220	Enabled torque direction for parallel drive		G163
B0221	1 = Torque direction I active	[SW 2.1 and later]	G163
B0222	1 = Torque direction II active	[SW 2.1 and later]	G163
B0225	1 = active paralleling master	[SW 2.1 and later]	G195
B0230	1 = No torque direction requested	[SW 2.1 and later]	G163
B0231	1 = Torque direction I requested	[SW 2.1 and later]	G163
B0232	1 = Torque direction II requested	[SW 2.1 and later]	G163

Motorized potentiometer		
B0240	Motorized potentiometer output = 0 (y = 0)	G126
B0241	Ramp-up/ramp-down finished (y = x)	G126

Brake control		
B0250	Brake control (1=close brake, 0=release brake)	G140
B0251	1=auxiliaries ON, 0=auxiliaries OFF	see Sect. 9.7
B0252	1=converter fan ON, 0=converter fan OFF	
B0255	B0250 inverted	G140
B0256	B0251 inverted	

Fixed control bits		
B0421	Control bit 1 (P421)	G120
B0422	Control bit 2 (P422)	G120
B0423	Control bit 3 (P423)	G120
B0424	Control bit 4 (P424)	G120
B0425	Control bit 5 (P425)	G120
B0426	Control bit 6 (P426)	G120
B0427	Control bit 7 (P427)	G120
B0428	Control bit 8 (P428)	G120

Control inputs		
B0500	Status of terminal 72	G117
B0501	Status of terminal 72, inverted	G117
B0502	Status of terminal 73	G117
B0503	Status of terminal 73, inverted	G117
B0504	Status of terminal 74	G117
B0505	Status of terminal 74, inverted	G117

Binector	Name, description	Function diag., Sheet
B0506	Status of terminal 75	G117
B0507	Status of terminal 75, inverted	G117
B0508	Status of terminal 76	G118
B0509	Status of terminal 76, inverted	G118
B0510	Status of terminal 77	G118
B0511	Status of terminal 77, inverted	G118
B0512	Status of terminal 78	G118
B0513	Status of terminal 78, inverted	G118
B0514	Status of terminal 79	G118
B0515	Status of terminal 79, inverted	G118

Control outputs		
B0520	Status of relay at terminal 81/82	G119
B0521	Status of relay at terminal 81/82, inverted	G119
B0522	Status of relay at terminal 83/84	G119
B0523	Status of relay at terminal 83/84, inverted	G119
B0524	Status of relay at terminal 85/86	G119
B0525	Status of relay at terminal 85/86, inverted	G119
B0526	Status of relay at terminal 87/88	G119
B0527	Status of relay at terminal 87/88, inverted	G119
B0528	Status of relay at terminal 89/90	G119
B0529	Status of relay at terminal 89/90, inverted	G119
B0530	Status of relay at terminal 91/92	G119
B0531	Status of relay at terminal 91/92, inverted	G119
B0532	Status of relay at terminal 93/94	G119
B0533	Status of relay at terminal 93/94, inverted	G119

Messages		
B0540	1=nset on ramp-function generator (K0160) is greater than U628	G136
B0541	B0540 inverted	G136

Serial interface 1 (USS1 on G-SST1)		
B2030	USS1 telegram monitoring timeout - maintained signal	G170
B2031	USS1 telegram monitoring timeout - 1s pulse	G170

Serial interface 1 (USS1 on G-SST1)		
B2100	USS1 receive data, word 1, bit 0	G170
B2101	USS1 receive data, word 1, bit 1	G170
B2102	USS1 receive data, word 1, bit 2	G170
B2103	USS1 receive data, word 1, bit 3	G170
B2104	USS1 receive data, word 1, bit 4	G170
B2105	USS1 receive data, word 1, bit 5	G170
B2106	USS1 receive data, word 1, bit 6	G170
B2107	USS1 receive data, word 1, bit 7	G170
B2108	USS1 receive data, word 1, bit 8	G170
B2109	USS1 receive data, word 1, bit 9	G170
B2110	USS1 receive data, word 1, bit 10	G170
B2111	USS1 receive data, word 1, bit 11	G170
B2112	USS1 receive data, word 1, bit 12	G170
B2113	USS1 receive data, word 1, bit 13	G170

Binector	Name, description	Function diag., Sheet
B2114	USS1 receive data, word 1, bit 14	G170
B2115	USS1 receive data, word 1, bit 15	G170
B2200	USS1 receive data, word 2, bit 0	G170
B2201	USS1 receive data, word 2, bit 1	G170
B2202	USS1 receive data, word 2, bit 2	G170
B2203	USS1 receive data, word 2, bit 3	G170
B2204	USS1 receive data, word 2, bit 4	G170
B2205	USS1 receive data, word 2, bit 5	G170
B2206	USS1 receive data, word 2, bit 6	G170
B2207	USS1 receive data, word 2, bit 7	G170
B2208	USS1 receive data, word 2, bit 8	G170
B2209	USS1 receive data, word 2, bit 9	G170
B2210	USS1 receive data, word 2, bit 10	G170
B2211	USS1 receive data, word 2, bit 11	G170
B2212	USS1 receive data, word 2, bit 12	G170
B2213	USS1 receive data, word 2, bit 13	G170
B2214	USS1 receive data, word 2, bit 14	G170
B2215	USS1 receive data, word 2, bit 15	G170
B2300	USS1 receive data, word 3, bit 0	G170
B2301	USS1 receive data, word 3, bit 1	G170
B2302	USS1 receive data, word 3, bit 2	G170
B2303	USS1 receive data, word 3, bit 3	G170
B2304	USS1 receive data, word 3, bit 4	G170
B2305	USS1 receive data, word 3, bit 5	G170
B2306	USS1 receive data, word 3, bit 6	G170
B2307	USS1 receive data, word 3, bit 7	G170
B2308	USS1 receive data, word 3, bit 8	G170
B2309	USS1 receive data, word 3, bit 9	G170
B2310	USS1 receive data, word 3, bit 10	G170
B2311	USS1 receive data, word 3, bit 11	G170
B2312	USS1 receive data, word 3, bit 12	G170
B2313	USS1 receive data, word 3, bit 13	G170
B2314	USS1 receive data, word 3, bit 14	G170
B2315	USS1 receive data, word 3, bit 15	G170
B2400	USS1 receive data, word 4, bit 0	G170
B2401	USS1 receive data, word 4, bit 1	G170
B2402	USS1 receive data, word 4, bit 2	G170
B2403	USS1 receive data, word 4, bit 3	G170
B2404	USS1 receive data, word 4, bit 4	G170
B2405	USS1 receive data, word 4, bit 5	G170
B2406	USS1 receive data, word 4, bit 6	G170
B2407	USS1 receive data, word 4, bit 7	G170
B2408	USS1 receive data, word 4, bit 8	G170
B2409	USS1 receive data, word 4, bit 9	G170
B2410	USS1 receive data, word 4, bit 10	G170
B2411	USS1 receive data, word 4, bit 11	G170
B2412	USS1 receive data, word 4, bit 12	G170
B2413	USS1 receive data, word 4, bit 13	G170
B2414	USS1 receive data, word 4, bit 14	G170
B2415	USS1 receive data, word 4, bit 15	G170

Binector	Name, description	Function diag., Sheet
B2500	USS1 receive data, word 5, bit 0	G170
B2501	USS1 receive data, word 5, bit 1	G170
B2502	USS1 receive data, word 5, bit 2	G170
B2503	USS1 receive data, word 5, bit 3	G170
B2504	USS1 receive data, word 5, bit 4	G170
B2505	USS1 receive data, word 5, bit 5	G170
B2506	USS1 receive data, word 5, bit 6	G170
B2507	USS1 receive data, word 5, bit 7	G170
B2508	USS1 receive data, word 5, bit 8	G170
B2509	USS1 receive data, word 5, bit 9	G170
B2510	USS1 receive data, word 5, bit 10	G170
B2511	USS1 receive data, word 5, bit 11	G170
B2512	USS1 receive data, word 5, bit 12	G170
B2513	USS1 receive data, word 5, bit 13	G170
B2514	USS1 receive data, word 5, bit 14	G170
B2515	USS1 receive data, word 5, bit 15	G170
B2600	USS1 receive data, word 6, bit 0	G170
B2601	USS1 receive data, word 6, bit 1	G170
B2602	USS1 receive data, word 6, bit 2	G170
B2603	USS1 receive data, word 6, bit 3	G170
B2604	USS1 receive data, word 6, bit 4	G170
B2605	USS1 receive data, word 6, bit 5	G170
B2606	USS1 receive data, word 6, bit 6	G170
B2607	USS1 receive data, word 6, bit 7	G170
B2608	USS1 receive data, word 6, bit 8	G170
B2609	USS1 receive data, word 6, bit 9	G170
B2610	USS1 receive data, word 6, bit 10	G170
B2611	USS1 receive data, word 6, bit 11	G170
B2612	USS1 receive data, word 6, bit 12	G170
B2613	USS1 receive data, word 6, bit 13	G170
B2614	USS1 receive data, word 6, bit 14	G170
B2615	USS1 receive data, word 6, bit 15	G170
B2700	USS1 receive data, word 7, bit 0	G170
B2701	USS1 receive data, word 7, bit 1	G170
B2702	USS1 receive data, word 7, bit 2	G170
B2703	USS1 receive data, word 7, bit 3	G170
B2704	USS1 receive data, word 7, bit 4	G170
B2705	USS1 receive data, word 7, bit 5	G170
B2706	USS1 receive data, word 7, bit 6	G170
B2707	USS1 receive data, word 7, bit 7	G170
B2708	USS1 receive data, word 7, bit 8	G170
B2709	USS1 receive data, word 7, bit 9	G170
B2710	USS1 receive data, word 7, bit 10	G170
B2711	USS1 receive data, word 7, bit 11	G170
B2712	USS1 receive data, word 7, bit 12	G170
B2713	USS1 receive data, word 7, bit 13	G170
B2714	USS1 receive data, word 7, bit 14	G170
B2715	USS1 receive data, word 7, bit 15	G170
B2800	USS1 receive data, word 8, bit 0	G170
B2801	USS1 receive data, word 8, bit 1	G170

Binector	Name, description	Function diag., Sheet
B2802	USS1 receive data, word 8, bit 2	G170
B2803	USS1 receive data, word 8, bit 3	G170
B2804	USS1 receive data, word 8, bit 4	G170
B2805	USS1 receive data, word 8, bit 5	G170
B2806	USS1 receive data, word 8, bit 6	G170
B2807	USS1 receive data, word 8, bit 7	G170
B2808	USS1 receive data, word 8, bit 8	G170
B2809	USS1 receive data, word 8, bit 9	G170
B2810	USS1 receive data, word 8, bit 10	G170
B2811	USS1 receive data, word 8, bit 11	G170
B2812	USS1 receive data, word 8, bit 12	G170
B2813	USS1 receive data, word 8, bit 13	G170
B2814	USS1 receive data, word 8, bit 14	G170
B2815	USS1 receive data, word 8, bit 15	G170
B2900	USS1 receive data, word 9, bit 0	G170
B2901	USS1 receive data, word 9, bit 1	G170
B2902	USS1 receive data, word 9, bit 2	G170
B2903	USS1 receive data, word 9, bit 3	G170
B2904	USS1 receive data, word 9, bit 4	G170
B2905	USS1 receive data, word 9, bit 5	G170
B2906	USS1 receive data, word 9, bit 6	G170
B2907	USS1 receive data, word 9, bit 7	G170
B2908	USS1 receive data, word 9, bit 8	G170
B2909	USS1 receive data, word 9, bit 9	G170
B2910	USS1 receive data, word 9, bit 10	G170
B2911	USS1 receive data, word 9, bit 11	G170
B2912	USS1 receive data, word 9, bit 12	G170
B2913	USS1 receive data, word 9, bit 13	G170
B2914	USS1 receive data, word 9, bit 14	G170
B2915	USS1 receive data, word 9, bit 15	G170

Process data exchange with 1st CB/TB		
B3030	Message timeout on 1st CB/TB - maintained signal	Z110
B3031	Message timeout on 1st CB/TB - 1s pulse	Z110
B3035	Telegram failure timeout for 1st CB/TB [SW 1.9 and later]	Z110

Process data exchange with 1st CB/TB		
B3100	Receive data from 1st CB/TB, word 1, bit 0	Z110
B3101	Receive data from 1st CB/TB, word 1, bit 1	Z110
B3102	Receive data from 1st CB/TB, word 1, bit 2	Z110
B3103	Receive data from 1st CB/TB, word 1, bit 3	Z110
B3104	Receive data from 1st CB/TB, word 1, bit 4	Z110
B3105	Receive data from 1st CB/TB, word 1, bit 5	Z110
B3106	Receive data from 1st CB/TB, word 1, bit 6	Z110
B3107	Receive data from 1st CB/TB, word 1, bit 7	Z110
B3108	Receive data from 1st CB/TB, word 1, bit 8	Z110
B3109	Receive data from 1st CB/TB, word 1, bit 9	Z110
B3110	Receive data from 1st CB/TB, word 1, bit 10	Z110
B3111	Receive data from 1st CB/TB, word 1, bit 11	Z110
B3112	Receive data from 1st CB/TB, word 1, bit 12	Z110

Binector	Name, description	Function diag., Sheet
B3113	Receive data from 1st CB/TB, word 1, bit 13	Z110
B3114	Receive data from 1st CB/TB, word 1, bit 14	Z110
B3115	Receive data from 1st CB/TB, word 1, bit 15	Z110
B3200	Receive data from 1st CB/TB, word 2, bit 0	Z110
B3201	Receive data from 1st CB/TB, word 2, bit 1	Z110
B3202	Receive data from 1st CB/TB, word 2, bit 2	Z110
B3203	Receive data from 1st CB/TB, word 2, bit 3	Z110
B3204	Receive data from 1st CB/TB, word 2, bit 4	Z110
B3205	Receive data from 1st CB/TB, word 2, bit 5	Z110
B3206	Receive data from 1st CB/TB, word 2, bit 6	Z110
B3207	Receive data from 1st CB/TB, word 2, bit 7	Z110
B3208	Receive data from 1st CB/TB, word 2, bit 8	Z110
B3209	Receive data from 1st CB/TB, word 2, bit 9	Z110
B3210	Receive data from 1st CB/TB, word 2, bit 10	Z110
B3211	Receive data from 1st CB/TB, word 2, bit 11	Z110
B3212	Receive data from 1st CB/TB, word 2, bit 12	Z110
B3213	Receive data from 1st CB/TB, word 2, bit 13	Z110
B3214	Receive data from 1st CB/TB, word 2, bit 14	Z110
B3215	Receive data from 1st CB/TB, word 2, bit 15	Z110
B3300	Receive data from 1st CB/TB, word 3, bit 0	Z110
B3301	Receive data from 1st CB/TB, word 3, bit 1	Z110
B3302	Receive data from 1st CB/TB, word 3, bit 2	Z110
B3303	Receive data from 1st CB/TB, word 3, bit 3	Z110
B3304	Receive data from 1st CB/TB, word 3, bit 4	Z110
B3305	Receive data from 1st CB/TB, word 3, bit 5	Z110
B3306	Receive data from 1st CB/TB, word 3, bit 6	Z110
B3307	Receive data from 1st CB/TB, word 3, bit 7	Z110
B3308	Receive data from 1st CB/TB, word 3, bit 8	Z110
B3309	Receive data from 1st CB/TB, word 3, bit 9	Z110
B3310	Receive data from 1st CB/TB, word 3, bit 10	Z110
B3311	Receive data from 1st CB/TB, word 3, bit 11	Z110
B3312	Receive data from 1st CB/TB, word 3, bit 12	Z110
B3313	Receive data from 1st CB/TB, word 3, bit 13	Z110
B3314	Receive data from 1st CB/TB, word 3, bit 14	Z110
B3315	Receive data from 1st CB/TB, word 3, bit 15	Z110
B3400	Receive data from 1st CB/TB, word 4, bit 0	Z110
B3401	Receive data from 1st CB/TB, word 4, bit 1	Z110
B3402	Receive data from 1st CB/TB, word 4, bit 2	Z110
B3403	Receive data from 1st CB/TB, word 4, bit 3	Z110
B3404	Receive data from 1st CB/TB, word 4, bit 4	Z110
B3405	Receive data from 1st CB/TB, word 4, bit 5	Z110
B3406	Receive data from 1st CB/TB, word 4, bit 6	Z110
B3407	Receive data from 1st CB/TB, word 4, bit 7	Z110
B3408	Receive data from 1st CB/TB, word 4, bit 8	Z110
B3409	Receive data from 1st CB/TB, word 4, bit 9	Z110
B3410	Receive data from 1st CB/TB, word 4, bit 10	Z110
B3411	Receive data from 1st CB/TB, word 4, bit 11	Z110
B3412	Receive data from 1st CB/TB, word 4, bit 12	Z110
B3413	Receive data from 1st CB/TB, word 4, bit 13	Z110
B3414	Receive data from 1st CB/TB, word 4, bit 14	Z110

Binector	Name, description	Function diag., Sheet
B3415	Receive data from 1st CB/TB, word 4, bit 15	Z110
B3500	Receive data from 1st CB/TB, word 5, bit 0	Z110
B3501	Receive data from 1st CB/TB, word 5, bit 1	Z110
B3502	Receive data from 1st CB/TB, word 5, bit 2	Z110
B3503	Receive data from 1st CB/TB, word 5, bit 3	Z110
B3504	Receive data from 1st CB/TB, word 5, bit 4	Z110
B3505	Receive data from 1st CB/TB, word 5, bit 5	Z110
B3506	Receive data from 1st CB/TB, word 5, bit 6	Z110
B3507	Receive data from 1st CB/TB, word 5, bit 7	Z110
B3508	Receive data from 1st CB/TB, word 5, bit 8	Z110
B3509	Receive data from 1st CB/TB, word 5, bit 9	Z110
B3510	Receive data from 1st CB/TB, word 5, bit 10	Z110
B3511	Receive data from 1st CB/TB, word 5, bit 11	Z110
B3512	Receive data from 1st CB/TB, word 5, bit 12	Z110
B3513	Receive data from 1st CB/TB, word 5, bit 13	Z110
B3514	Receive data from 1st CB/TB, word 5, bit 14	Z110
B3515	Receive data from 1st CB/TB, word 5, bit 15	Z110
B3600	Receive data from 1st CB/TB, word 6, bit 0	Z110
B3601	Receive data from 1st CB/TB, word 6, bit 1	Z110
B3602	Receive data from 1st CB/TB, word 6, bit 2	Z110
B3603	Receive data from 1st CB/TB, word 6, bit 3	Z110
B3604	Receive data from 1st CB/TB, word 6, bit 4	Z110
B3605	Receive data from 1st CB/TB, word 6, bit 5	Z110
B3606	Receive data from 1st CB/TB, word 6, bit 6	Z110
B3607	Receive data from 1st CB/TB, word 6, bit 7	Z110
B3608	Receive data from 1st CB/TB, word 6, bit 8	Z110
B3609	Receive data from 1st CB/TB, word 6, bit 9	Z110
B3610	Receive data from 1st CB/TB, word 6, bit 10	Z110
B3611	Receive data from 1st CB/TB, word 6, bit 11	Z110
B3612	Receive data from 1st CB/TB, word 6, bit 12	Z110
B3613	Receive data from 1st CB/TB, word 6, bit 13	Z110
B3614	Receive data from 1st CB/TB, word 6, bit 14	Z110
B3615	Receive data from 1st CB/TB, word 6, bit 15	Z110
B3700	Receive data from 1st CB/TB, word 7, bit 0	Z110
B3701	Receive data from 1st CB/TB, word 7, bit 1	Z110
B3702	Receive data from 1st CB/TB, word 7, bit 2	Z110
B3703	Receive data from 1st CB/TB, word 7, bit 3	Z110
B3704	Receive data from 1st CB/TB, word 7, bit 4	Z110
B3705	Receive data from 1st CB/TB, word 7, bit 5	Z110
B3706	Receive data from 1st CB/TB, word 7, bit 6	Z110
B3707	Receive data from 1st CB/TB, word 7, bit 7	Z110
B3708	Receive data from 1st CB/TB, word 7, bit 8	Z110
B3709	Receive data from 1st CB/TB, word 7, bit 9	Z110
B3710	Receive data from 1st CB/TB, word 7, bit 10	Z110
B3711	Receive data from 1st CB/TB, word 7, bit 11	Z110
B3712	Receive data from 1st CB/TB, word 7, bit 12	Z110
B3713	Receive data from 1st CB/TB, word 7, bit 13	Z110
B3714	Receive data from 1st CB/TB, word 7, bit 14	Z110
B3715	Receive data from 1st CB/TB, word 7, bit 15	Z110
B3800	Receive data from 1st CB/TB, word 8, bit 0	Z110

Binector	Name, description	Function diag., Sheet
B3801	Receive data from 1st CB/TB, word 8, bit 1	Z110
B3802	Receive data from 1st CB/TB, word 8, bit 2	Z110
B3803	Receive data from 1st CB/TB, word 8, bit 3	Z110
B3804	Receive data from 1st CB/TB, word 8, bit 4	Z110
B3805	Receive data from 1st CB/TB, word 8, bit 5	Z110
B3806	Receive data from 1st CB/TB, word 8, bit 6	Z110
B3807	Receive data from 1st CB/TB, word 8, bit 7	Z110
B3808	Receive data from 1st CB/TB, word 8, bit 8	Z110
B3809	Receive data from 1st CB/TB, word 8, bit 9	Z110
B3810	Receive data from 1st CB/TB, word 8, bit 10	Z110
B3811	Receive data from 1st CB/TB, word 8, bit 11	Z110
B3812	Receive data from 1st CB/TB, word 8, bit 12	Z110
B3813	Receive data from 1st CB/TB, word 8, bit 13	Z110
B3814	Receive data from 1st CB/TB, word 8, bit 14	Z110
B3815	Receive data from 1st CB/TB, word 8, bit 15	Z110
B3900	Receive data from 1st CB/TB, word 9, bit 0	Z110
B3901	Receive data from 1st CB/TB, word 9, bit 1	Z110
B3902	Receive data from 1st CB/TB, word 9, bit 2	Z110
B3903	Receive data from 1st CB/TB, word 9, bit 3	Z110
B3904	Receive data from 1st CB/TB, word 9, bit 4	Z110
B3905	Receive data from 1st CB/TB, word 9, bit 5	Z110
B3906	Receive data from 1st CB/TB, word 9, bit 6	Z110
B3907	Receive data from 1st CB/TB, word 9, bit 7	Z110
B3908	Receive data from 1st CB/TB, word 9, bit 8	Z110
B3909	Receive data from 1st CB/TB, word 9, bit 9	Z110
B3910	Receive data from 1st CB/TB, word 9, bit 10	Z110
B3911	Receive data from 1st CB/TB, word 9, bit 11	Z110
B3912	Receive data from 1st CB/TB, word 9, bit 12	Z110
B3913	Receive data from 1st CB/TB, word 9, bit 13	Z110
B3914	Receive data from 1st CB/TB, word 9, bit 14	Z110
B3915	Receive data from 1st CB/TB, word 9, bit 15	Z110

SCB1 with SCI			
B4100	SCI, slave 1, binary input 1	[SW 1.9 and later]	Z130, Z140
B4101	SCI, slave 1, binary input 2	[SW 1.9 and later]	Z130, Z140
B4102	SCI, slave 1, binary input 3	[SW 1.9 and later]	Z130, Z140
B4103	SCI, slave 1, binary input 4	[SW 1.9 and later]	Z130, Z140
B4104	SCI, slave 1, binary input 5	[SW 1.9 and later]	Z130, Z140
B4105	SCI, slave 1, binary input 6	[SW 1.9 and later]	Z130, Z140
B4106	SCI, slave 1, binary input 7	[SW 1.9 and later]	Z130, Z140
B4107	SCI, slave 1, binary input 8	[SW 1.9 and later]	Z130, Z140
B4108	SCI, slave 1, binary input 9	[SW 1.9 and later]	Z130, Z140
B4109	SCI, slave 1, binary input 10	[SW 1.9 and later]	Z140
B4110	SCI, slave 1, binary input 11	[SW 1.9 and later]	Z140
B4111	SCI, slave 1, binary input 12	[SW 1.9 and later]	Z140
B4112	SCI, slave 1, binary input 13	[SW 1.9 and later]	Z140
B4113	SCI, slave 1, binary input 14	[SW 1.9 and later]	Z140
B4114	SCI, slave 1, binary input 15	[SW 1.9 and later]	Z140
B4115	SCI, slave 1, binary input 16	[SW 1.9 and later]	Z140
B4120	SCI, slave 1, binary input 1 inverted	[SW 1.9 and later]	Z130, Z140

Binector	Name, description	Function diag., Sheet
B4121	SCI, slave 1, binary input 2 inverted [SW 1.9 and later]	Z130, Z140
B4122	SCI, slave 1, binary input 3 inverted [SW 1.9 and later]	Z130, Z140
B4123	SCI, slave 1, binary input 4 inverted [SW 1.9 and later]	Z130, Z140
B4124	SCI, slave 1, binary input 5 inverted [SW 1.9 and later]	Z130, Z140
B4125	SCI, slave 1, binary input 6 inverted [SW 1.9 and later]	Z130, Z140
B4126	SCI, slave 1, binary input 7 inverted [SW 1.9 and later]	Z130, Z140
B4127	SCI, slave 1, binary input 8 inverted [SW 1.9 and later]	Z130, Z140
B4128	SCI, slave 1, binary input 9 inverted [SW 1.9 and later]	Z130, Z140
B4129	SCI, slave 1, binary input 10 inverted [SW 1.9 and later]	Z140
B4130	SCI, slave 1, binary input 11 inverted [SW 1.9 and later]	Z140
B4131	SCI, slave 1, binary input 12 inverted [SW 1.9 and later]	Z140
B4132	SCI, slave 1, binary input 13 inverted [SW 1.9 and later]	Z140
B4133	SCI, slave 1, binary input 14 inverted [SW 1.9 and later]	Z140
B4134	SCI, slave 1, binary input 15 inverted [SW 1.9 and later]	Z140
B4135	SCI, slave 1, binary input 16 inverted [SW 1.9 and later]	Z140
B4200	SCI, slave 2, binary input 1 [SW 1.9 and later]	Z131, Z141
B4201	SCI, slave 2, binary input 2 [SW 1.9 and later]	Z131, Z141
B4202	SCI, slave 2, binary input 3 [SW 1.9 and later]	Z131, Z141
B4203	SCI, slave 2, binary input 4 [SW 1.9 and later]	Z131, Z141
B4204	SCI, slave 2, binary input 5 [SW 1.9 and later]	Z131, Z141
B4205	SCI, slave 2, binary input 6 [SW 1.9 and later]	Z131, Z141
B4206	SCI, slave 2, binary input 7 [SW 1.9 and later]	Z131, Z141
B4207	SCI, slave 2, binary input 8 [SW 1.9 and later]	Z131, Z141
B4208	SCI, slave 2, binary input 9 [SW 1.9 and later]	Z131, Z141
B4209	SCI, slave 2, binary input 10 [SW 1.9 and later]	Z141
B4210	SCI, slave 2, binary input 11 [SW 1.9 and later]	Z141
B4211	SCI, slave 2, binary input 12 [SW 1.9 and later]	Z141
B4212	SCI, slave 2, binary input 13 [SW 1.9 and later]	Z141
B4213	SCI, slave 2, binary input 14 [SW 1.9 and later]	Z141
B4214	SCI, slave 2, binary input 15 [SW 1.9 and later]	Z141
B4215	SCI, slave 2, binary input 16 [SW 1.9 and later]	Z141
B4220	SCI, slave 2, binary input 1 inverted [SW 1.9 and later]	Z131, Z141
B4221	SCI, slave 2, binary input 2 inverted [SW 1.9 and later]	Z131, Z141
B4222	SCI, slave 2, binary input 3 inverted [SW 1.9 and later]	Z131, Z141
B4223	SCI, slave 2, binary input 4 inverted [SW 1.9 and later]	Z131, Z141
B4224	SCI, slave 2, binary input 5 inverted [SW 1.9 and later]	Z131, Z141
B4225	SCI, slave 2, binary input 6 inverted [SW 1.9 and later]	Z131, Z141
B4226	SCI, slave 2, binary input 7 inverted [SW 1.9 and later]	Z131, Z141
B4227	SCI, slave 2, binary input 8 inverted [SW 1.9 and later]	Z131, Z141
B4228	SCI, slave 2, binary input 9 inverted [SW 1.9 and later]	Z131, Z141
B4229	SCI, slave 2, binary input 10 inverted [SW 1.9 and later]	Z141
B4230	SCI, slave 2, binary input 11 inverted [SW 1.9 and later]	Z141
B4231	SCI, slave 2, binary input 12 inverted [SW 1.9 and later]	Z141
B4232	SCI, slave 2, binary input 13 inverted [SW 1.9 and later]	Z141
B4233	SCI, slave 2, binary input 14 inverted [SW 1.9 and later]	Z141
B4234	SCI, slave 2, binary input 15 inverted [SW 1.9 and later]	Z141
B4235	SCI, slave 2, binary input 16 inverted [SW 1.9 and later]	Z141

Optional supplementary boards: 1st expansion board EB1		
B5101	Analog input terminal 50 / 51: 1 = wire break (i ≤ 2 mA)	Z112

Binector	Name, description	Function diag., Sheet
B5102	Analog input terminal 52 (use as digital input): 1 = input voltage is > 8V (log "1")	Z112
B5103	Analog input terminal 53 (use as digital input): 1 = input voltage is > 8V (log "1")	Z112
B5104	State terminal 43 (bidirectional input/output) inverted	Z114
B5105	State terminal 43 (bidirectional input/output)	Z114
B5106	State terminal 44 (bidirectional input/output) inverted	Z114
B5107	State terminal 44 (bidirectional input/output)	Z114
B5108	State terminal 45 (bidirectional Input/output) inverted	Z114
B5109	State terminal 45 (bidirectional input/output)	Z114
B5110	State terminal 46 (bidirectional input/output) inverted	Z114
B5111	State terminal 46 (bidirectional Input/output)	Z114
B5112	State terminal 40 (digital input) inverted	Z114
B5113	State terminal 40 (digital input)	Z114
B5114	State terminal 41 (digital input) inverted	Z114
B5115	State terminal 41 (digital input)	Z114
B5116	State terminal 42 (digital input) inverted	Z114
B5117	State terminal 42 (digital input)	Z114

Optional supplementary boards: 1st Expansion board EB2 [SW 1.5 and later]		
B5121	Analog input terminal 49 / 50: 1 = wire break (i ≤ 2 mA)	Z118
B5122	State terminal 53 (digital input) inverted	Z118
B5123	State terminal 53 (digital input)	Z118
B5124	State terminal 54 (digital input) inverted	Z118
B5125	State terminal 54 (digital input)	Z118

Optional supplementary boards: 2nd expansion board EB1		
B5201	Analog input terminal 50 / 51: 1 = wire break (i ≤ 2 mA)	Z115
B5202	Analog input terminal 52 (use as digital input): 1 = input voltage is > 8V (log "1")	Z115
B5203	Analog input terminal 53 (use as digital input): 1 = input voltage is > 8V (log "1")	Z115
B5204	State terminal 43 (bidirectional input/output) inverted	Z117
B5205	State terminal 43 (bidirectional input/output)	Z117
B5206	State terminal 44 (bidirectional input/output) inverted	Z117
B5207	State terminal 44 (bidirectional input/output)	Z117
B5208	State terminal 45 (bidirectional Input/output) inverted	Z117
B5209	State terminal 45 (bidirectional input/output)	Z117
B5210	State terminal 46 (bidirectional input/output) inverted	Z117
B5211	State terminal 46 (bidirectional Input/output)	Z117
B5212	State terminal 40 (digital input) inverted	Z117
B5213	State terminal 40 (digital input)	Z117
B5214	State terminal 41 (digital input) inverted	Z117
B5215	State terminal 41 (digital input)	Z117
B5216	State terminal 42 (digital input) inverted	Z117
B5217	State terminal 42 (digital input)	Z117

Optional supplementary boards: 2nd Expansion board EB2		
B5221	Analog input terminal 49 / 50: 1 = wire break (i ≤ 2 mA)	Z119
B5222	State terminal 53 (digital input) inverted	Z119
B5223	State terminal 53 (digital input)	Z119
B5224	State terminal 54 (digital input) inverted	Z119
B5225	State terminal 54 (digital input)	Z119

Binector	Name, description	Function diag., Sheet
Serial interface 2 (USS2 / Peer-to-peer 2 on G-SST2)		
B6030	USS2 / Peer2 - Telegram monitoring timeout - maintained signal	G171, G173
B6031	USS2 / Peer2 - Telegram monitoring timeout - 1s pulse	G171, G173

Paralleling interface			
B6040	Telegram monitoring timeout - maintained signal	[SW 2.1 and later]	G195
B6041	Telegram monitoring timeout - 1s pulse	[SW 2.1 and later]	G195

Serial interface 2 (USS2 / Peer-to-peer 2 on G-SST2)		
B6100	USS2 / Peer2 receive data, word 1, bit 0	G171, G173
B6101	USS2 / Peer2 receive data, word 1, bit 1	G171, G173
B6102	USS2 / Peer2 receive data, word 1, bit 2	G171, G173
B6103	USS2 / Peer2 receive data, word 1, bit 3	G171, G173
B6104	USS2 / Peer2 receive data, word 1, bit 4	G171, G173
B6105	USS2 / Peer2 receive data, word 1, bit 5	G171, G173
B6106	USS2 / Peer2 receive data, word 1, bit 6	G171, G173
B6107	USS2 / Peer2 receive data, word 1, bit 7	G171, G173
B6108	USS2 / Peer2 receive data, word 1, bit 8	G171, G173
B6109	USS2 / Peer2 receive data, word 1, bit 9	G171, G173
B6110	USS2 / Peer2 receive data, word 1, bit 10	G171, G173
B6111	USS2 / Peer2 receive data, word 1, bit 11	G171, G173
B6112	USS2 / Peer2 receive data, word 1, bit 12	G171, G173
B6113	USS2 / Peer2 receive data, word 1, bit 13	G171, G173
B6114	USS2 / Peer2 receive data, word 1, bit 14	G171, G173
B6115	USS2 / Peer2 receive data, word 1, bit 15	G171, G173
B6200	USS2 / Peer2 receive data, word 2, bit 0	G171, G173
B6201	USS2 / Peer2 receive data, word 2, bit 1	G171, G173
B6202	USS2 / Peer2 receive data, word 2, bit 2	G171, G173
B6203	USS2 / Peer2 receive data, word 2, bit 3	G171, G173
B6204	USS2 / Peer2 receive data, word 2, bit 4	G171, G173
B6205	USS2 / Peer2 receive data, word 2, bit 5	G171, G173
B6206	USS2 / Peer2 receive data, word 2, bit 6	G171, G173
B6207	USS2 / Peer2 receive data, word 2, bit 7	G171, G173
B6208	USS2 / Peer2 receive data, word 2, bit 8	G171, G173
B6209	USS2 / Peer2 receive data, word 2, bit 9	G171, G173
B6210	USS2 / Peer2 receive data, word 2, bit 10	G171, G173
B6211	USS2 / Peer2 receive data, word 2, bit 11	G171, G173
B6212	USS2 / Peer2 receive data, word 2, bit 12	G171, G173
B6213	USS2 / Peer2 receive data, word 2, bit 13	G171, G173
B6214	USS2 / Peer2 receive data, word 2, bit 14	G171, G173
B6215	USS2 / Peer2 receive data, word 2, bit 15	G171, G173

Paralleling interface			
B6220	Word 1 from master / Word 1 from slave with address 2, bit 0	[SW 2.1 and later]	G195
B6221	Word 1 from master / Word 1 from slave with address 2, bit 1	[SW 2.1 and later]	G195
B6222	Word 1 from master / Word 1 from slave with address 2, bit 2	[SW 2.1 and later]	G195
B6223	Word 1 from master / Word 1 from slave with address 2, bit 3	[SW 2.1 and later]	G195
B6224	Word 1 from master / Word 1 from slave with address 2, bit 4	[SW 2.1 and later]	G195
B6225	Word 1 from master / Word 1 from slave with address 2, bit 5	[SW 2.1 and later]	G195
B6226	Word 1 from master / Word 1 from slave with address 2, bit 6	[SW 2.1 and later]	G195

Binector	Name, description		Function diag., Sheet
B6227	Word 1 from master / Word 1 from slave with address 2, bit 7	[SW 2.1 and later]	G195
B6228	Word 1 from master / Word 1 from slave with address 2, bit 8	[SW 2.1 and later]	G195
B6229	Word 1 from master / Word 1 from slave with address 2, bit 9	[SW 2.1 and later]	G195
B6230	Word 1 from master / Word 1 from slave with address 2, bit 10	[SW 2.1 and later]	G195
B6231	Word 1 from master / Word 1 from slave with address 2, bit 11	[SW 2.1 and later]	G195
B6232	Word 1 from master / Word 1 from slave with address 2, bit 12	[SW 2.1 and later]	G195
B6233	Word 1 from master / Word 1 from slave with address 2, bit 13	[SW 2.1 and later]	G195
B6234	Word 1 from master / Word 1 from slave with address 2, bit 14	[SW 2.1 and later]	G195
B6235	Word 1 from master / Word 1 from slave with address 2, bit 15	[SW 2.1 and later]	G195

Serial interface 2 (USS2 / Peer-to-peer 2 on G-SST2)		
B6300	USS2 / Peer2 receive data, word 3, bit 0	G171, G173
B6301	USS2 / Peer2 receive data, word 3, bit 1	G171, G173
B6302	USS2 / Peer2 receive data, word 3, bit 2	G171, G173
B6303	USS2 / Peer2 receive data, word 3, bit 3	G171, G173
B6304	USS2 / Peer2 receive data, word 3, bit 4	G171, G173
B6305	USS2 / Peer2 receive data, word 3, bit 5	G171, G173
B6306	USS2 / Peer2 receive data, word 3, bit 6	G171, G173
B6307	USS2 / Peer2 receive data, word 3, bit 7	G171, G173
B6308	USS2 / Peer2 receive data, word 3, bit 8	G171, G173
B6309	USS2 / Peer2 receive data, word 3, bit 9	G171, G173
B6310	USS2 / Peer2 receive data, word 3, bit 10	G171, G173
B6311	USS2 / Peer2 receive data, word 3, bit 11	G171, G173
B6312	USS2 / Peer2 receive data, word 3, bit 12	G171, G173
B6313	USS2 / Peer2 receive data, word 3, bit 13	G171, G173
B6314	USS2 / Peer2 receive data, word 3, bit 14	G171, G173
B6315	USS2 / Peer2 receive data, word 3, bit 15	G171, G173

Paralleling interface			
B6320	Word 1 from slave with address 3, bit 0	[SW 2.1 and later]	G195
B6321	Word 1 from slave with address 3, bit 1	[SW 2.1 and later]	G195
B6322	Word 1 from slave with address 3, bit 2	[SW 2.1 and later]	G195
B6323	Word 1 from slave with address 3, bit 3	[SW 2.1 and later]	G195
B6324	Word 1 from slave with address 3, bit 4	[SW 2.1 and later]	G195
B6325	Word 1 from slave with address 3, bit 5	[SW 2.1 and later]	G195
B6326	Word 1 from slave with address 3, bit 6	[SW 2.1 and later]	G195
B6327	Word 1 from slave with address 3, bit 7	[SW 2.1 and later]	G195
B6328	Word 1 from slave with address 3, bit 8	[SW 2.1 and later]	G195
B6329	Word 1 from slave with address 3, bit 9	[SW 2.1 and later]	G195
B6330	Word 1 from slave with address 3, bit 10	[SW 2.1 and later]	G195
B6331	Word 1 from slave with address 3, bit 11	[SW 2.1 and later]	G195
B6332	Word 1 from slave with address 3, bit 12	[SW 2.1 and later]	G195
B6333	Word 1 from slave with address 3, bit 13	[SW 2.1 and later]	G195
B6334	Word 1 from slave with address 3, bit 14	[SW 2.1 and later]	G195
B6335	Word 1 from slave with address 3, bit 15	[SW 2.1 and later]	G195

Serial interface 2 (USS2 / Peer-to-peer 2 on G-SST2)		
B6400	USS2 / Peer2 receive data, word 4, bit 0	G171, G173
B6401	USS2 / Peer2 receive data, word 4, bit 1	G171, G173
B6402	USS2 / Peer2 receive data, word 4, bit 2	G171, G173

Binector	Name, description	Function diag., Sheet
B6403	USS2 / Peer2 receive data, word 4, bit 3	G171, G173
B6404	USS2 / Peer2 receive data, word 4, bit 4	G171, G173
B6405	USS2 / Peer2 receive data, word 4, bit 5	G171, G173
B6406	USS2 / Peer2 receive data, word 4, bit 6	G171, G173
B6407	USS2 / Peer2 receive data, word 4, bit 7	G171, G173
B6408	USS2 / Peer2 receive data, word 4, bit 8	G171, G173
B6409	USS2 / Peer2 receive data, word 4, bit 9	G171, G173
B6410	USS2 / Peer2 receive data, word 4, bit 10	G171, G173
B6411	USS2 / Peer2 receive data, word 4, bit 11	G171, G173
B6412	USS2 / Peer2 receive data, word 4, bit 12	G171, G173
B6413	USS2 / Peer2 receive data, word 4, bit 13	G171, G173
B6414	USS2 / Peer2 receive data, word 4, bit 14	G171, G173
B6415	USS2 / Peer2 receive data, word 4, bit 15	G171, G173

Paralleling interface			
B6420	Word 1 from slave with address 4, bit 0	[SW 2.1 and later]	G195
B6421	Word 1 from slave with address 4, bit 1	[SW 2.1 and later]	G195
B6422	Word 1 from slave with address 4, bit 2	[SW 2.1 and later]	G195
B6423	Word 1 from slave with address 4, bit 3	[SW 2.1 and later]	G195
B6424	Word 1 from slave with address 4, bit 4	[SW 2.1 and later]	G195
B6425	Word 1 from slave with address 4, bit 5	[SW 2.1 and later]	G195
B6426	Word 1 from slave with address 4, bit 6	[SW 2.1 and later]	G195
B6427	Word 1 from slave with address 4, bit 7	[SW 2.1 and later]	G195
B6428	Word 1 from slave with address 4, bit 8	[SW 2.1 and later]	G195
B6429	Word 1 from slave with address 4, bit 9	[SW 2.1 and later]	G195
B6430	Word 1 from slave with address 4, bit 10	[SW 2.1 and later]	G195
B6431	Word 1 from slave with address 4, bit 11	[SW 2.1 and later]	G195
B6432	Word 1 from slave with address 4, bit 12	[SW 2.1 and later]	G195
B6433	Word 1 from slave with address 4, bit 13	[SW 2.1 and later]	G195
B6434	Word 1 from slave with address 4, bit 14	[SW 2.1 and later]	G195
B6435	Word 1 from slave with address 4, bit 15	[SW 2.1 and later]	G195

Serial interface 2 (USS2 / Peer-to-peer 2 on G-SST2)		
B6500	USS2 / Peer2 receive data, word 5, bit 0	G171, G173
B6501	USS2 / Peer2 receive data, word 5, bit 1	G171, G173
B6502	USS2 / Peer2 receive data, word 5, bit 2	G171, G173
B6503	USS2 / Peer2 receive data, word 5, bit 3	G171, G173
B6504	USS2 / Peer2 receive data, word 5, bit 4	G171, G173
B6505	USS2 / Peer2 receive data, word 5, bit 5	G171, G173
B6506	USS2 / Peer2 receive data, word 5, bit 6	G171, G173
B6507	USS2 / Peer2 receive data, word 5, bit 7	G171, G173
B6508	USS2 / Peer2 receive data, word 5, bit 8	G171, G173
B6509	USS2 / Peer2 receive data, word 5, bit 9	G171, G173
B6510	USS2 / Peer2 receive data, word 5, bit 10	G171, G173
B6511	USS2 / Peer2 receive data, word 5, bit 11	G171, G173
B6512	USS2 / Peer2 receive data, word 5, bit 12	G171, G173
B6513	USS2 / Peer2 receive data, word 5, bit 13	G171, G173
B6514	USS2 / Peer2 receive data, word 5, bit 14	G171, G173
B6515	USS2 / Peer2 receive data, word 5, bit 15	G171, G173

Binector	Name, description		Function diag., Sheet
Paralleling interface			
B6520	Word 1 from slave with address 5, bit 0	[SW 2.1 and later]	G195
B6521	Word 1 from slave with address 5, bit 1	[SW 2.1 and later]	G195
B6522	Word 1 from slave with address 5, bit 2	[SW 2.1 and later]	G195
B6523	Word 1 from slave with address 5, bit 3	[SW 2.1 and later]	G195
B6524	Word 1 from slave with address 5, bit 4	[SW 2.1 and later]	G195
B6525	Word 1 from slave with address 5, bit 5	[SW 2.1 and later]	G195
B6526	Word 1 from slave with address 5, bit 6	[SW 2.1 and later]	G195
B6527	Word 1 from slave with address 5, bit 7	[SW 2.1 and later]	G195
B6528	Word 1 from slave with address 5, bit 8	[SW 2.1 and later]	G195
B6529	Word 1 from slave with address 5, bit 9	[SW 2.1 and later]	G195
B6530	Word 1 from slave with address 5, bit 10	[SW 2.1 and later]	G195
B6531	Word 1 from slave with address 5, bit 11	[SW 2.1 and later]	G195
B6532	Word 1 from slave with address 5, bit 12	[SW 2.1 and later]	G195
B6533	Word 1 from slave with address 5, bit 13	[SW 2.1 and later]	G195
B6534	Word 1 from slave with address 5, bit 14	[SW 2.1 and later]	G195
B6535	Word 1 from slave with address 5, bit 15	[SW 2.1 and later]	G195

Serial interface 2 (USS2 / Peer-to-peer 2 on G-SST2)		
B6600	USS2 receive data, word 6, bit 0	G171
B6601	USS2 receive data, word 6, bit 1	G171
B6602	USS2 receive data, word 6, bit 2	G171
B6603	USS2 receive data, word 6, bit 3	G171
B6604	USS2 receive data, word 6, bit 4	G171
B6605	USS2 receive data, word 6, bit 5	G171
B6606	USS2 receive data, word 6, bit 6	G171
B6607	USS2 receive data, word 6, bit 7	G171
B6608	USS2 receive data, word 6, bit 8	G171
B6609	USS2 receive data, word 6, bit 9	G171
B6610	USS2 receive data, word 6, bit 10	G171
B6611	USS2 receive data, word 6, bit 11	G171
B6612	USS2 receive data, word 6, bit 12	G171
B6613	USS2 receive data, word 6, bit 13	G171
B6614	USS2 receive data, word 6, bit 14	G171
B6615	USS2 receive data, word 6, bit 15	G171

Paralleling interface			
B6620	Word 1 from slave with address 6, bit 0	[SW 2.1 and later]	G195
B6621	Word 1 from slave with address 6, bit 1	[SW 2.1 and later]	G195
B6622	Word 1 from slave with address 6, bit 2	[SW 2.1 and later]	G195
B6623	Word 1 from slave with address 6, bit 3	[SW 2.1 and later]	G195
B6624	Word 1 from slave with address 6, bit 4	[SW 2.1 and later]	G195
B6625	Word 1 from slave with address 6, bit 5	[SW 2.1 and later]	G195
B6626	Word 1 from slave with address 6, bit 6	[SW 2.1 and later]	G195
B6627	Word 1 from slave with address 6, bit 7	[SW 2.1 and later]	G195
B6628	Word 1 from slave with address 6, bit 8	[SW 2.1 and later]	G195
B6629	Word 1 from slave with address 6, bit 9	[SW 2.1 and later]	G195
B6630	Word 1 from slave with address 6, bit 10	[SW 2.1 and later]	G195
B6631	Word 1 from slave with address 6, bit 11	[SW 2.1 and later]	G195
B6632	Word 1 from slave with address 6, bit 12	[SW 2.1 and later]	G195

Binector	Name, description	Function diag., Sheet
B6633	Word 1 from slave with address 6, bit 13 [SW 2.1 and later]	G195
B6634	Word 1 from slave with address 6, bit 14 [SW 2.1 and later]	G195
B6635	Word 1 from slave with address 6, bit 15 [SW 2.1 and later]	G195

Serial interface 2 (USS2 / Peer-to-peer 2 on G-SST2)		
B6700	USS2 receive data, word 7, bit 0	G171
B6701	USS2 receive data, word 7, bit 1	G171
B6702	USS2 receive data, word 7, bit 2	G171
B6703	USS2 receive data, word 7, bit 3	G171
B6704	USS2 receive data, word 7, bit 4	G171
B6705	USS2 receive data, word 7, bit 5	G171
B6706	USS2 receive data, word 7, bit 6	G171
B6707	USS2 receive data, word 7, bit 7	G171
B6708	USS2 receive data, word 7, bit 8	G171
B6709	USS2 receive data, word 7, bit 9	G171
B6710	USS2 receive data, word 7, bit 10	G171
B6711	USS2 receive data, word 7, bit 11	G171
B6712	USS2 receive data, word 7, bit 12	G171
B6713	USS2 receive data, word 7, bit 13	G171
B6714	USS2 receive data, word 7, bit 14	G171
B6715	USS2 receive data, word 7, bit 15	G171
B6800	USS2 receive data, word 8, bit 0	G171
B6801	USS2 receive data, word 8, bit 1	G171
B6802	USS2 receive data, word 8, bit 2	G171
B6803	USS2 receive data, word 8, bit 3	G171
B6804	USS2 receive data, word 8, bit 4	G171
B6805	USS2 receive data, word 8, bit 5	G171
B6806	USS2 receive data, word 8, bit 6	G171
B6807	USS2 receive data, word 8, bit 7	G171
B6808	USS2 receive data, word 8, bit 8	G171
B6809	USS2 receive data, word 8, bit 9	G171
B6810	USS2 receive data, word 8, bit 10	G171
B6811	USS2 receive data, word 8, bit 11	G171
B6812	USS2 receive data, word 8, bit 12	G171
B6813	USS2 receive data, word 8, bit 13	G171
B6814	USS2 receive data, word 8, bit 14	G171
B6815	USS2 receive data, word 8, bit 15	G171
B6900	USS2 receive data, word 9, bit 0	G171
B6901	USS2 receive data, word 9, bit 1	G171
B6902	USS2 receive data, word 9, bit 2	G171
B6903	USS2 receive data, word 9, bit 3	G171
B6904	USS2 receive data, word 9, bit 4	G171
B6905	USS2 receive data, word 9, bit 5	G171
B6906	USS2 receive data, word 9, bit 6	G171
B6907	USS2 receive data, word 9, bit 7	G171
B6908	USS2 receive data, word 9, bit 8	G171
B6909	USS2 receive data, word 9, bit 9	G171
B6910	USS2 receive data, word 9, bit 10	G171
B6911	USS2 receive data, word 9, bit 11	G171
B6912	USS2 receive data, word 9, bit 12	G171

Binector	Name, description	Function diag., Sheet
B6913	USS2 receive data, word 9, bit 13	G171
B6914	USS2 receive data, word 9, bit 14	G171
B6915	USS2 receive data, word 9, bit 15	G171

Optional supplementary boards: SBP pulse encoder evaluation		
B7000	State terminal 74 / 75 (check track)	Z120
B7001	State terminal 65 (coarse pulse 1)	Z120
B7002	State terminal 66 (coarse pulse 2)	Z120
B7003	State terminal 67 (fine pulse 2)	Z120

Optional supplementary boards: SIMOLINK board		
B7030	1 = Telegram failure	Z121
B7040	1 = Time out	Z121
B7050	1 = Alarm start-up	Z121
B7100	Receive data from the SIMOLINK board, word 1 bit 0	Z122
B7101	Receive data from the SIMOLINK board, word 1 bit 1	Z122
B7102	Receive data from the SIMOLINK board, word 1 bit 2	Z122
B7103	Receive data from the SIMOLINK board, word 1 bit 3	Z122
B7104	Receive data from the SIMOLINK board, word 1 bit 4	Z122
B7105	Receive data from the SIMOLINK board, word 1 bit 5	Z122
B7106	Receive data from the SIMOLINK board, word 1 bit 6	Z122
B7107	Receive data from the SIMOLINK board, word 1 bit 7	Z122
B7108	Receive data from the SIMOLINK board, word 1 bit 8	Z122
B7109	Receive data from the SIMOLINK board, word 1 bit 9	Z122
B7110	Receive data from the SIMOLINK board, word 1 bit 10	Z122
B7111	Receive data from the SIMOLINK board, word 1 bit 11	Z122
B7112	Receive data from the SIMOLINK board, word 1 bit 12	Z122
B7113	Receive data from the SIMOLINK board, word 1 bit 13	Z122
B7114	Receive data from the SIMOLINK board, word 1 bit 14	Z122
B7115	Receive data from the SIMOLINK board, word 1 bit 15	Z122
B7200	Receive data from the SIMOLINK board, word 2 bit 0	Z122
B7201	Receive data from the SIMOLINK board, word 2 bit 1	Z122
B7202	Receive data from the SIMOLINK board, word 2 bit 2	Z122
B7203	Receive data from the SIMOLINK board, word 2 bit 3	Z122
B7204	Receive data from the SIMOLINK board, word 2 bit 4	Z122
B7205	Receive data from the SIMOLINK board, word 2 bit 5	Z122
B7206	Receive data from the SIMOLINK board, word 2 bit 6	Z122
B7207	Receive data from the SIMOLINK board, word 2 bit 7	Z122
B7208	Receive data from the SIMOLINK board, word 2 bit 8	Z122
B7209	Receive data from the SIMOLINK board, word 2 bit 9	Z122
B7210	Receive data from the SIMOLINK board, word 2 bit 10	Z122
B7211	Receive data from the SIMOLINK board, word 2 bit 11	Z122
B7212	Receive data from the SIMOLINK board, word 2 bit 12	Z122
B7213	Receive data from the SIMOLINK board, word 2 bit 13	Z122
B7214	Receive data from the SIMOLINK board, word 2 bit 14	Z122
B7215	Receive data from the SIMOLINK board, word 2 bit 15	Z122
B7300	Receive data from the SIMOLINK board, word 3 bit 0	Z122
B7301	Receive data from the SIMOLINK board, word 3 bit 1	Z122
B7302	Receive data from the SIMOLINK board, word 3 bit 2	Z122
B7303	Receive data from the SIMOLINK board, word 3 bit 3	Z122

Binector	Name, description	Function diag., Sheet
B7304	Receive data from the SIMOLINK board, word 3 bit 4	Z122
B7305	Receive data from the SIMOLINK board, word 3 bit 5	Z122
B7306	Receive data from the SIMOLINK board, word 3 bit 6	Z122
B7307	Receive data from the SIMOLINK board, word 3 bit 7	Z122
B7308	Receive data from the SIMOLINK board, word 3 bit 8	Z122
B7309	Receive data from the SIMOLINK board, word 3 bit 9	Z122
B7310	Receive data from the SIMOLINK board, word 3 bit 10	Z122
B7311	Receive data from the SIMOLINK board, word 3 bit 11	Z122
B7312	Receive data from the SIMOLINK board, word 3 bit 12	Z122
B7313	Receive data from the SIMOLINK board, word 3 bit 13	Z122
B7314	Receive data from the SIMOLINK board, word 3 bit 14	Z122
B7315	Receive data from the SIMOLINK board, word 3 bit 15	Z122
B7400	Receive data from the SIMOLINK board, word 4 bit 0	Z122
B7401	Receive data from the SIMOLINK board, word 4 bit 1	Z122
B7402	Receive data from the SIMOLINK board, word 4 bit 2	Z122
B7403	Receive data from the SIMOLINK board, word 4 bit 3	Z122
B7404	Receive data from the SIMOLINK board, word 4 bit 4	Z122
B7405	Receive data from the SIMOLINK board, word 4 bit 5	Z122
B7406	Receive data from the SIMOLINK board, word 4 bit 6	Z122
B7407	Receive data from the SIMOLINK board, word 4 bit 7	Z122
B7408	Receive data from the SIMOLINK board, word 4 bit 8	Z122
B7409	Receive data from the SIMOLINK board, word 4 bit 9	Z122
B7410	Receive data from the SIMOLINK board, word 4 bit 10	Z122
B7411	Receive data from the SIMOLINK board, word 4 bit 11	Z122
B7412	Receive data from the SIMOLINK board, word 4 bit 12	Z122
B7413	Receive data from the SIMOLINK board, word 4 bit 13	Z122
B7414	Receive data from the SIMOLINK board, word 4 bit 14	Z122
B7415	Receive data from the SIMOLINK board, word 4 bit 15	Z122
B7500	Receive data from the SIMOLINK board, word 5 bit 0	Z122
B7501	Receive data from the SIMOLINK board, word 5 bit 1	Z122
B7502	Receive data from the SIMOLINK board, word 5 bit 2	Z122
B7503	Receive data from the SIMOLINK board, word 5 bit 3	Z122
B7504	Receive data from the SIMOLINK board, word 5 bit 4	Z122
B7505	Receive data from the SIMOLINK board, word 5 bit 5	Z122
B7506	Receive data from the SIMOLINK board, word 5 bit 6	Z122
B7507	Receive data from the SIMOLINK board, word 5 bit 7	Z122
B7508	Receive data from the SIMOLINK board, word 5 bit 8	Z122
B7509	Receive data from the SIMOLINK board, word 5 bit 9	Z122
B7510	Receive data from the SIMOLINK board, word 5 bit 10	Z122
B7511	Receive data from the SIMOLINK board, word 5 bit 11	Z122
B7512	Receive data from the SIMOLINK board, word 5 bit 12	Z122
B7513	Receive data from the SIMOLINK board, word 5 bit 13	Z122
B7514	Receive data from the SIMOLINK board, word 5 bit 14	Z122
B7515	Receive data from the SIMOLINK board, word 5 bit 15	Z122
B7600	Receive data from the SIMOLINK board, word 6 bit 0	Z122
B7601	Receive data from the SIMOLINK board, word 6 bit 1	Z122
B7602	Receive data from the SIMOLINK board, word 6 bit 2	Z122
B7603	Receive data from the SIMOLINK board, word 6 bit 3	Z122
B7604	Receive data from the SIMOLINK board, word 6 bit 4	Z122
B7605	Receive data from the SIMOLINK board, word 6 bit 5	Z122

Binector	Name, description	Function diag., Sheet
B7606	Receive data from the SIMOLINK board, word 6 bit 6	Z122
B7607	Receive data from the SIMOLINK board, word 6 bit 7	Z122
B7608	Receive data from the SIMOLINK board, word 6 bit 8	Z122
B7609	Receive data from the SIMOLINK board, word 6 bit 9	Z122
B7610	Receive data from the SIMOLINK board, word 6 bit 10	Z122
B7611	Receive data from the SIMOLINK board, word 6 bit 11	Z122
B7612	Receive data from the SIMOLINK board, word 6 bit 12	Z122
B7613	Receive data from the SIMOLINK board, word 6 bit 13	Z122
B7614	Receive data from the SIMOLINK board, word 6 bit 14	Z122
B7615	Receive data from the SIMOLINK board, word 6 bit 15	Z122
B7700	Receive data from the SIMOLINK board, word 7 bit 0	Z122
B7701	Receive data from the SIMOLINK board, word 7 bit 1	Z122
B7702	Receive data from the SIMOLINK board, word 7 bit 2	Z122
B7703	Receive data from the SIMOLINK board, word 7 bit 3	Z122
B7704	Receive data from the SIMOLINK board, word 7 bit 4	Z122
B7705	Receive data from the SIMOLINK board, word 7 bit 5	Z122
B7706	Receive data from the SIMOLINK board, word 7 bit 6	Z122
B7707	Receive data from the SIMOLINK board, word 7 bit 7	Z122
B7708	Receive data from the SIMOLINK board, word 7 bit 8	Z122
B7709	Receive data from the SIMOLINK board, word 7 bit 9	Z122
B7710	Receive data from the SIMOLINK board, word 7 bit 10	Z122
B7711	Receive data from the SIMOLINK board, word 7 bit 11	Z122
B7712	Receive data from the SIMOLINK board, word 7 bit 12	Z122
B7713	Receive data from the SIMOLINK board, word 7 bit 13	Z122
B7714	Receive data from the SIMOLINK board, word 7 bit 14	Z122
B7715	Receive data from the SIMOLINK board, word 7 bit 15	Z122
B7800	Receive data from the SIMOLINK board, word 8 bit 0	Z122
B7801	Receive data from the SIMOLINK board, word 8 bit 1	Z122
B7802	Receive data from the SIMOLINK board, word 8 bit 2	Z122
B7803	Receive data from the SIMOLINK board, word 8 bit 3	Z122
B7804	Receive data from the SIMOLINK board, word 8 bit 4	Z122
B7805	Receive data from the SIMOLINK board, word 8 bit 5	Z122
B7806	Receive data from the SIMOLINK board, word 8 bit 6	Z122
B7807	Receive data from the SIMOLINK board, word 8 bit 7	Z122
B7808	Receive data from the SIMOLINK board, word 8 bit 8	Z122
B7809	Receive data from the SIMOLINK board, word 8 bit 9	Z122
B7810	Receive data from the SIMOLINK board, word 8 bit 10	Z122
B7811	Receive data from the SIMOLINK board, word 8 bit 11	Z122
B7812	Receive data from the SIMOLINK board, word 8 bit 12	Z122
B7813	Receive data from the SIMOLINK board, word 8 bit 13	Z122
B7814	Receive data from the SIMOLINK board, word 8 bit 14	Z122
B7815	Receive data from the SIMOLINK board, word 8 bit 15	Z122
B7900	Receive data from the SIMOLINK board, word 9 bit 0	Z122
B7901	Receive data from the SIMOLINK board, word 9 bit 1	Z122
B7902	Receive data from the SIMOLINK board, word 9 bit 2	Z122
B7903	Receive data from the SIMOLINK board, word 9 bit 3	Z122
B7904	Receive data from the SIMOLINK board, word 9 bit 4	Z122
B7905	Receive data from the SIMOLINK board, word 9 bit 5	Z122
B7906	Receive data from the SIMOLINK board, word 9 bit 6	Z122
B7907	Receive data from the SIMOLINK board, word 9 bit 7	Z122

Binector	Name, description	Function diag., Sheet
B7908	Receive data from the SIMOLINK board, word 9 bit 8	Z122
B7909	Receive data from the SIMOLINK board, word 9 bit 9	Z122
B7910	Receive data from the SIMOLINK board, word 9 bit 10	Z122
B7911	Receive data from the SIMOLINK board, word 9 bit 11	Z122
B7912	Receive data from the SIMOLINK board, word 9 bit 12	Z122
B7913	Receive data from the SIMOLINK board, word 9 bit 13	Z122
B7914	Receive data from the SIMOLINK board, word 9 bit 14	Z122
B7915	Receive data from the SIMOLINK board, word 9 bit 15	Z122

Process data exchange with 2nd CB		
B8030	Fault delay timeout for 2nd CB - maintained signal	Z111
B8031	Fault delay timeout for 2nd CB - 1s pulse	Z111
B8035	Telegram failure timeout for 2nd CB [SW 1.9 and later]	Z111

Process data exchange with 2nd CB		
B8100	Receive data from 2nd CB, word 1, bit 0	Z111
B8101	Receive data from 2nd CB, word 1, bit 1	Z111
B8102	Receive data from 2nd CB, word 1, bit 2	Z111
B8103	Receive data from 2nd CB, word 1, bit 3	Z111
B8104	Receive data from 2nd CB, word 1, bit 4	Z111
B8105	Receive data from 2nd CB, word 1, bit 5	Z111
B8106	Receive data from 2nd CB, word 1, bit 6	Z111
B8107	Receive data from 2nd CB, word 1, bit 7	Z111
B8108	Receive data from 2nd CB, word 1, bit 8	Z111
B8109	Receive data from 2nd CB, word 1, bit 9	Z111
B8110	Receive data from 2nd CB, word 1, bit 10	Z111
B8111	Receive data from 2nd CB, word 1, bit 11	Z111
B8112	Receive data from 2nd CB, word 1, bit 12	Z111
B8113	Receive data from 2nd CB, word 1, bit 13	Z111
B8114	Receive data from 2nd CB, word 1, bit 14	Z111
B8115	Receive data from 2nd CB, word 1, bit 15	Z111
B8200	Receive data from 2nd CB, word 2, bit 0	Z111
B8201	Receive data from 2nd CB, word 2, bit 1	Z111
B8202	Receive data from 2nd CB, word 2, bit 2	Z111
B8203	Receive data from 2nd CB, word 2, bit 3	Z111
B8204	Receive data from 2nd CB, word 2, bit 4	Z111
B8205	Receive data from 2nd CB, word 2, bit 5	Z111
B8206	Receive data from 2nd CB, word 2, bit 6	Z111
B8207	Receive data from 2nd CB, word 2, bit 7	Z111
B8208	Receive data from 2nd CB, word 2, bit 8	Z111
B8209	Receive data from 2nd CB, word 2, bit 9	Z111
B8210	Receive data from 2nd CB, word 2, bit 10	Z111
B8211	Receive data from 2nd CB, word 2, bit 11	Z111
B8212	Receive data from 2nd CB, word 2, bit 12	Z111
B8213	Receive data from 2nd CB, word 2, bit 13	Z111
B8214	Receive data from 2nd CB, word 2, bit 14	Z111
B8215	Receive data from 2nd CB, word 2, bit 15	Z111
B8300	Receive data from 2nd CB, word 3, bit 0	Z111
B8301	Receive data from 2nd CB, word 3, bit 1	Z111
B8302	Receive data from 2nd CB, word 3, bit 2	Z111

Binector	Name, description	Function diag., Sheet
B8303	Receive data from 2nd CB, word 3, bit 3	Z111
B8304	Receive data from 2nd CB, word 3, bit 4	Z111
B8305	Receive data from 2nd CB, word 3, bit 5	Z111
B8306	Receive data from 2nd CB, word 3, bit 6	Z111
B8307	Receive data from 2nd CB, word 3, bit 7	Z111
B8308	Receive data from 2nd CB, word 3, bit 8	Z111
B8309	Receive data from 2nd CB, word 3, bit 9	Z111
B8310	Receive data from 2nd CB, word 3, bit 10	Z111
B8311	Receive data from 2nd CB, word 3, bit 11	Z111
B8312	Receive data from 2nd CB, word 3, bit 12	Z111
B8313	Receive data from 2nd CB, word 3, bit 13	Z111
B8314	Receive data from 2nd CB, word 3, bit 14	Z111
B8315	Receive data from 2nd CB, word 3, bit 15	Z111
B8400	Receive data from 2nd CB, word 4, bit 0	Z111
B8401	Receive data from 2nd CB, word 4, bit 1	Z111
B8402	Receive data from 2nd CB, word 4, bit 2	Z111
B8403	Receive data from 2nd CB, word 4, bit 3	Z111
B8404	Receive data from 2nd CB, word 4, bit 4	Z111
B8405	Receive data from 2nd CB, word 4, bit 5	Z111
B8406	Receive data from 2nd CB, word 4, bit 6	Z111
B8407	Receive data from 2nd CB, word 4, bit 7	Z111
B8408	Receive data from 2nd CB, word 4, bit 8	Z111
B8409	Receive data from 2nd CB, word 4, bit 9	Z111
B8410	Receive data from 2nd CB, word 4, bit 10	Z111
B8411	Receive data from 2nd CB, word 4, bit 11	Z111
B8412	Receive data from 2nd CB, word 4, bit 12	Z111
B8413	Receive data from 2nd CB, word 4, bit 13	Z111
B8414	Receive data from 2nd CB, word 4, bit 14	Z111
B8415	Receive data from 2nd CB, word 4, bit 15	Z111
B8500	Receive data from 2nd CB, word 5, bit 0	Z111
B8501	Receive data from 2nd CB, word 5, bit 1	Z111
B8502	Receive data from 2nd CB, word 5, bit 2	Z111
B8503	Receive data from 2nd CB, word 5, bit 3	Z111
B8504	Receive data from 2nd CB, word 5, bit 4	Z111
B8505	Receive data from 2nd CB, word 5, bit 5	Z111
B8506	Receive data from 2nd CB, word 5, bit 6	Z111
B8507	Receive data from 2nd CB, word 5, bit 7	Z111
B8508	Receive data from 2nd CB, word 5, bit 8	Z111
B8509	Receive data from 2nd CB, word 5, bit 9	Z111
B8510	Receive data from 2nd CB, word 5, bit 10	Z111
B8511	Receive data from 2nd CB, word 5, bit 11	Z111
B8512	Receive data from 2nd CB, word 5, bit 12	Z111
B8513	Receive data from 2nd CB, word 5, bit 13	Z111
B8514	Receive data from 2nd CB, word 5, bit 14	Z111
B8515	Receive data from 2nd CB, word 5, bit 15	Z111
B8600	Receive data from 2nd CB, word 6, bit 0	Z111
B8601	Receive data from 2nd CB, word 6, bit 1	Z111
B8602	Receive data from 2nd CB, word 6, bit 2	Z111
B8603	Receive data from 2nd CB, word 6, bit 3	Z111
B8604	Receive data from 2nd CB, word 6, bit 4	Z111

Binector	Name, description	Function diag., Sheet
B8605	Receive data from 2nd CB, word 6, bit 5	Z111
B8606	Receive data from 2nd CB, word 6, bit 6	Z111
B8607	Receive data from 2nd CB, word 6, bit 7	Z111
B8608	Receive data from 2nd CB, word 6, bit 8	Z111
B8609	Receive data from 2nd CB, word 6, bit 9	Z111
B8610	Receive data from 2nd CB, word 6, bit 10	Z111
B8611	Receive data from 2nd CB, word 6, bit 11	Z111
B8612	Receive data from 2nd CB, word 6, bit 12	Z111
B8613	Receive data from 2nd CB, word 6, bit 13	Z111
B8614	Receive data from 2nd CB, word 6, bit 14	Z111
B8615	Receive data from 2nd CB, word 6, bit 15	Z111
B8700	Receive data from 2nd CB, word 7, bit 0	Z111
B8701	Receive data from 2nd CB, word 7, bit 1	Z111
B8702	Receive data from 2nd CB, word 7, bit 2	Z111
B8703	Receive data from 2nd CB, word 7, bit 3	Z111
B8704	Receive data from 2nd CB, word 7, bit 4	Z111
B8705	Receive data from 2nd CB, word 7, bit 5	Z111
B8706	Receive data from 2nd CB, word 7, bit 6	Z111
B8707	Receive data from 2nd CB, word 7, bit 7	Z111
B8708	Receive data from 2nd CB, word 7, bit 8	Z111
B8709	Receive data from 2nd CB, word 7, bit 9	Z111
B8710	Receive data from 2nd CB, word 7, bit 10	Z111
B8711	Receive data from 2nd CB, word 7, bit 11	Z111
B8712	Receive data from 2nd CB, word 7, bit 12	Z111
B8713	Receive data from 2nd CB, word 7, bit 13	Z111
B8714	Receive data from 2nd CB, word 7, bit 14	Z111
B8715	Receive data from 2nd CB, word 7, bit 15	Z111
B8800	Receive data from 2nd CB, word 8, bit 0	Z111
B8801	Receive data from 2nd CB, word 8, bit 1	Z111
B8802	Receive data from 2nd CB, word 8, bit 2	Z111
B8803	Receive data from 2nd CB, word 8, bit 3	Z111
B8804	Receive data from 2nd CB, word 8, bit 4	Z111
B8805	Receive data from 2nd CB, word 8, bit 5	Z111
B8806	Receive data from 2nd CB, word 8, bit 6	Z111
B8807	Receive data from 2nd CB, word 8, bit 7	Z111
B8808	Receive data from 2nd CB, word 8, bit 8	Z111
B8809	Receive data from 2nd CB, word 8, bit 9	Z111
B8810	Receive data from 2nd CB, word 8, bit 10	Z111
B8811	Receive data from 2nd CB, word 8, bit 11	Z111
B8812	Receive data from 2nd CB, word 8, bit 12	Z111
B8813	Receive data from 2nd CB, word 8, bit 13	Z111
B8814	Receive data from 2nd CB, word 8, bit 14	Z111
B8815	Receive data from 2nd CB, word 8, bit 15	Z111
B8900	Receive data from 2nd CB, word 9, bit 0	Z111
B8901	Receive data from 2nd CB, word 9, bit 1	Z111
B8902	Receive data from 2nd CB, word 9, bit 2	Z111
B8903	Receive data from 2nd CB, word 9, bit 3	Z111
B8904	Receive data from 2nd CB, word 9, bit 4	Z111
B8905	Receive data from 2nd CB, word 9, bit 5	Z111
B8906	Receive data from 2nd CB, word 9, bit 6	Z111

Binector	Name, description	Function diag., Sheet
B8907	Receive data from 2nd CB, word 9, bit 7	Z111
B8908	Receive data from 2nd CB, word 9, bit 8	Z111
B8909	Receive data from 2nd CB, word 9, bit 9	Z111
B8910	Receive data from 2nd CB, word 9, bit 10	Z111
B8911	Receive data from 2nd CB, word 9, bit 11	Z111
B8912	Receive data from 2nd CB, word 9, bit 12	Z111
B8913	Receive data from 2nd CB, word 9, bit 13	Z111
B8914	Receive data from 2nd CB, word 9, bit 14	Z111
B8915	Receive data from 2nd CB, word 9, bit 15	Z111

Serial interface 3 (USS3 / Peer-to-peer 3 on G-SST3)		
B9030	USS3 / Peer3 - Telegram monitoring timeout - maintained signal	G172, G174
B9031	USS3 / Peer3 - Telegram monitoring timeout - 1s pulse	G172, G174

Technology software S00: Voltage monitor for electronics power supply			
B9050	Power ON (100ms pulse on connection of voltage)	FB 1	B110
B9051	Power OFF (10ms pulse on disconnection of voltage)	FB 1	B110

Technology software S00: Connector/binector converters			
B9052	Connector/binector converter 1, bit 0	FB 10	B120
B9053	Connector/binector converter 1, bit 1	FB 10	B120
B9054	Connector/binector converter 1, bit 2	FB 10	B120
B9055	Connector/binector converter 1, bit 3	FB 10	B120
B9056	Connector/binector converter 1, bit 4	FB 10	B120
B9057	Connector/binector converter 1, bit 5	FB 10	B120
B9058	Connector/binector converter 1, bit 6	FB 10	B120
B9059	Connector/binector converter 1, bit 7	FB 10	B120
B9060	Connector/binector converter 1, bit 8	FB 10	B120
B9061	Connector/binector converter 1, bit 9	FB 10	B120
B9062	Connector/binector converter 1, bit 10	FB 10	B120
B9063	Connector/binector converter 1, bit 11	FB 10	B120
B9064	Connector/binector converter 1, bit 12	FB 10	B120
B9065	Connector/binector converter 1, bit 13	FB 10	B120
B9066	Connector/binector converter 1, bit 14	FB 10	B120
B9067	Connector/binector converter 1, bit 15	FB 10	B120
B9068	Connector/binector converter 2, bit 0	FB 11	B120
B9069	Connector/binector converter 2, bit 1	FB 11	B120
B9070	Connector/binector converter 2, bit 2	FB 11	B120
B9071	Connector/binector converter 2, bit 3	FB 11	B120
B9072	Connector/binector converter 2, bit 4	FB 11	B120
B9073	Connector/binector converter 2, bit 5	FB 11	B120
B9074	Connector/binector converter 2, bit 6	FB 11	B120
B9075	Connector/binector converter 2, bit 7	FB 11	B120
B9076	Connector/binector converter 2, bit 8	FB 11	B120
B9077	Connector/binector converter 2, bit 9	FB 11	B120
B9078	Connector/binector converter 2, bit 10	FB 11	B120
B9079	Connector/binector converter 2, bit 11	FB 11	B120
B9080	Connector/binector converter 2, bit 12	FB 11	B120
B9081	Connector/binector converter 2, bit 13	FB 11	B120
B9082	Connector/binector converter 2, bit 14	FB 11	B120

Binector	Name, description	Function diag., Sheet
B9083	Connector/binector converter 2, bit 15 FB 11	B120
B9084	Connector/binector converter 3, bit 0 FB 12	B120
B9085	Connector/binector converter 3, bit 1 FB 12	B120
B9086	Connector/binector converter 3, bit 2 FB 12	B120
B9087	Connector/binector converter 3, bit 3 FB 12	B120
B9088	Connector/binector converter 3, bit 4 FB 12	B120
B9089	Connector/binector converter 3, bit 5 FB 12	B120
B9090	Connector/binector converter 3, bit 6 FB 12	B120
B9091	Connector/binector converter 3, bit 7 FB 12	B120
B9092	Connector/binector converter 3, bit 8 FB 12	B120
B9093	Connector/binector converter 3, bit 9 FB 12	B120
B9094	Connector/binector converter 3, bit 10 FB 12	B120
B9095	Connector/binector converter 3, bit 11 FB 12	B120
B9096	Connector/binector converter 3, bit 12 FB 12	B120
B9097	Connector/binector converter 3, bit 13 FB 12	B120
B9098	Connector/binector converter 3, bit 14 FB 12	B120
B9099	Connector/binector converter 3, bit 15 FB 12	B120

Serial interface 3 (USS3 / Peer-to-peer 3 on G-SST3)		
B9100	USS3 / Peer3 receive data, word 1, bit 0	G172, G174
B9101	USS3 / Peer3 receive data, word 1, bit 1	G172, G174
B9102	USS3 / Peer3 receive data, word 1, bit 2	G172, G174
B9103	USS3 / Peer3 receive data, word 1, bit 3	G172, G174
B9104	USS3 / Peer3 receive data, word 1, bit 4	G172, G174
B9105	USS3 / Peer3 receive data, word 1, bit 5	G172, G174
B9106	USS3 / Peer3 receive data, word 1, bit 6	G172, G174
B9107	USS3 / Peer3 receive data, word 1, bit 7	G172, G174
B9108	USS3 / Peer3 receive data, word 1, bit 8	G172, G174
B9109	USS3 / Peer3 receive data, word 1, bit 9	G172, G174
B9110	USS3 / Peer3 receive data, word 1, bit 10	G172, G174
B9111	USS3 / Peer3 receive data, word 1, bit 11	G172, G174
B9112	USS3 / Peer3 receive data, word 1, bit 12	G172, G174
B9113	USS3 / Peer3 receive data, word 1, bit 13	G172, G174
B9114	USS3 / Peer3 receive data, word 1, bit 14	G172, G174
B9115	USS3 / Peer3 receive data, word 1, bit 15	G172, G174

Technology software S00: Limiters		
B9150	Limiter 1: Positive limitation has responded FB 65	B135
B9151	Limiter 1: Negative limitation has responded FB 65	B135
B9152	Limiter 2: Positive limitation has responded FB 66	B135
B9153	Limiter 2: Negative limitation has responded FB 66	B135
B9154	Limiter 3: Positive limitation has responded FB 67	B135
B9155	Limiter 3: Negative limitation has responded FB 67	B135
B9156	Limiter 4: Positive limitation has responded [SW 2.0 and later] FB 212	B134
B9157	Limiter 4: Negative limitation has responded [SW 2.0 and later] FB 212	B134
B9158	Limiter 5: Positive limitation has responded [SW 2.0 and later] FB 213	B134
B9159	Limiter 5: Negative limitation has responded [SW 2.0 and later] FB 213	B134

Technology software S00: Limit-value monitor with filter		
B9160	Limit-value monitor with filter 1: |A| < B has responded FB 70	B136

Binector	Name, description		Function diag., Sheet
B9161	Limit-value monitor with filter 1: A < B has responded	FB 70	B136
B9162	Limit-value monitor with filter 1: A = B has responded	FB 70	B136
B9163	Limit-value monitor with filter 2: |A| < B has responded	FB 71	B136
B9164	Limit-value monitor with filter 2: A < B has responded	FB 71	B136
B9165	Limit-value monitor with filter 2: A = B has responded	FB 71	B136
B9166	Limit-value monitor with filter 3: |A| < B has responded	FB 72	B136
B9167	Limit-value monitor with filter 3: A < B has responded	FB 72	B136
B9168	Limit-value monitor with filter 3: A = B has responded	FB 72	B136

Technology software S00: Limit-value monitor without filter			
B9169	Limit-value monitor without filter 1: |A| < B has responded	FB 73	B137
B9170	Limit-value monitor without filter 1: A < B has responded	FB 73	B137
B9171	Limit-value monitor without filter 1: A = B has responded	FB 73	B137
B9172	Limit-value monitor without filter 2: |A| < B has responded	FB 74	B137
B9173	Limit-value monitor without filter 2: A < B has responded	FB 74	B137
B9174	Limit-value monitor without filter 2: A = B has responded	FB 74	B137
B9175	Limit-value monitor without filter 3: |A| < B has responded	FB 75	B137
B9176	Limit-value monitor without filter 3: A < B has responded	FB 75	B137
B9177	Limit-value monitor without filter 3: A = B has responded	FB 75	B137
B9178	Limit-value monitor without filter 4: |A| < B has responded	FB 76	B137
B9179	Limit-value monitor without filter 4: A < B has responded	FB 76	B137
B9180	Limit-value monitor without filter 4: A = B has responded	FB 76	B137
B9181	Limit-value monitor without filter 5: |A| < B has responded	FB 77	B137
B9182	Limit-value monitor without filter 5: A < B has responded	FB 77	B137
B9183	Limit-value monitor without filter 5: A = B has responded	FB 77	B137
B9184	Limit-value monitor without filter 6: |A| < B has responded	FB 78	B137
B9185	Limit-value monitor without filter 6: A < B has responded	FB 78	B137
B9186	Limit-value monitor without filter 6: A = B has responded	FB 78	B137
B9187	Limit-value monitor without filter 7: |A| < B has responded	FB 79	B137
B9188	Limit-value monitor without filter 7: A < B has responded	FB 79	B137
B9189	Limit-value monitor without filter 7: A = B has responded	FB 79	B137

Technology software S00: Simple ramp-function generator			
B9190	Ramp-function generator output = ramp-function generator input (y = x)	FB 113	B165
B9191	0 = ramp-function generator initial run	FB 113	B165

Technology software S00: EXCLUSIVE OR elements with 2 inputs each			
B9195	Output of EXCLUSIVE OR element 1	FB 170	B206
B9196	Output of EXCLUSIVE OR element 2	FB 171	B206
B9197	Output of EXCLUSIVE OR element 3	FB 172	B206
B9198	Output of EXCLUSIVE OR element 4	FB 173	B206

Serial interface 3 (USS3 / Peer-to-peer 3 on G-SST3)		
B9200	USS3 / Peer3 receive data, word 2, bit 0	G172, G174
B9201	USS3 / Peer3 receive data, word 2, bit 1	G172, G174
B9202	USS3 / Peer3 receive data, word 2, bit 2	G172, G174
B9203	USS3 / Peer3 receive data, word 2, bit 3	G172, G174
B9204	USS3 / Peer3 receive data, word 2, bit 4	G172, G174
B9205	USS3 / Peer3 receive data, word 2, bit 5	G172, G174
B9206	USS3 / Peer3 receive data, word 2, bit 6	G172, G174

Binector	Name, description	Function diag., Sheet
B9207	USS3 / Peer3 receive data, word 2, bit 7	G172, G174
B9208	USS3 / Peer3 receive data, word 2, bit 8	G172, G174
B9209	USS3 / Peer3 receive data, word 2, bit 9	G172, G174
B9210	USS3 / Peer3 receive data, word 2, bit 10	G172, G174
B9211	USS3 / Peer3 receive data, word 2, bit 11	G172, G174
B9212	USS3 / Peer3 receive data, word 2, bit 12	G172, G174
B9213	USS3 / Peer3 receive data, word 2, bit 13	G172, G174
B9214	USS3 / Peer3 receive data, word 2, bit 14	G172, G174
B9215	USS3 / Peer3 receive data, word 2, bit 15	G172, G174

Technology software S00: Decoders / demultiplexers, binary to 1 of 8			
B9250	Decoder / demultiplexer 1: Q0	FB 118	B200
B9251	Decoder / demultiplexer 1: Q1	FB 118	B200
B9252	Decoder / demultiplexer 1: Q2	FB 118	B200
B9253	Decoder / demultiplexer 1: Q3	FB 118	B200
B9254	Decoder / demultiplexer 1: Q4	FB 118	B200
B9255	Decoder / demultiplexer 1: Q5	FB 118	B200
B9256	Decoder / demultiplexer 1: Q6	FB 118	B200
B9257	Decoder / demultiplexer 1: Q7	FB 118	B200
B9260	Decoder / demultiplexer 1: /Q0	FB 118	B200
B9261	Decoder / demultiplexer 1: /Q1	FB 118	B200
B9262	Decoder / demultiplexer 1: /Q2	FB 118	B200
B9263	Decoder / demultiplexer 1: /Q3	FB 118	B200
B9264	Decoder / demultiplexer 1: /Q4	FB 118	B200
B9265	Decoder / demultiplexer 1: /Q5	FB 118	B200
B9266	Decoder / demultiplexer 1: /Q6	FB 118	B200
B9267	Decoder / demultiplexer 1: /Q7	FB 118	B200
B9270	Decoder / demultiplexer 2: Q0	FB 119	B200
B9271	Decoder / demultiplexer 2: Q1	FB 119	B200
B9272	Decoder / demultiplexer 2: Q2	FB 119	B200
B9273	Decoder / demultiplexer 2: Q3	FB 119	B200
B9274	Decoder / demultiplexer 2: Q4	FB 119	B200
B9275	Decoder / demultiplexer 2: Q5	FB 119	B200
B9276	Decoder / demultiplexer 2: Q6	FB 119	B200
B9277	Decoder / demultiplexer 2: Q7	FB 119	B200
B9280	Decoder / demultiplexer 2: /Q0	FB 119	B200
B9281	Decoder / demultiplexer 2: /Q1	FB 119	B200
B9282	Decoder / demultiplexer 2: /Q2	FB 119	B200
B9283	Decoder / demultiplexer 2: /Q3	FB 119	B200
B9284	Decoder / demultiplexer 2: /Q4	FB 119	B200
B9285	Decoder / demultiplexer 2: /Q5	FB 119	B200
B9286	Decoder / demultiplexer 2: /Q6	FB 119	B200
B9287	Decoder / demultiplexer 2: /Q7	FB 119	B200

S00 technology software: Software counter				
B9290	Output overflow software counter	[SW 1.9 and later]	FB 89	B196
B9291	Output underflow software counter	[SW 1.9 and later]	FB 89	B196

Technology software S00: Limiters				
B9295	Limiter 6: Positive limitation has responded	[SW 2.0 and later]	FB 214	B134

Binector	Name, description	Function diag., Sheet
B9296	Limiter 6: Negative limitation has responded [SW 2.0 and later] FB 214	B134

Serial interface 3 (USS3 / Peer-to-peer 3 on G-SST3)		
B9300	USS3 / Peer3 receive data, word 3, bit 0	G172, G174
B9301	USS3 / Peer3 receive data, word 3, bit 1	G172, G174
B9302	USS3 / Peer3 receive data, word 3, bit 2	G172, G174
B9303	USS3 / Peer3 receive data, word 3, bit 3	G172, G174
B9304	USS3 / Peer3 receive data, word 3, bit 4	G172, G174
B9305	USS3 / Peer3 receive data, word 3, bit 5	G172, G174
B9306	USS3 / Peer3 receive data, word 3, bit 6	G172, G174
B9307	USS3 / Peer3 receive data, word 3, bit 7	G172, G174
B9308	USS3 / Peer3 receive data, word 3, bit 8	G172, G174
B9309	USS3 / Peer3 receive data, word 3, bit 9	G172, G174
B9310	USS3 / Peer3 receive data, word 3, bit 10	G172, G174
B9311	USS3 / Peer3 receive data, word 3, bit 11	G172, G174
B9312	USS3 / Peer3 receive data, word 3, bit 12	G172, G174
B9313	USS3 / Peer3 receive data, word 3, bit 13	G172, G174
B9314	USS3 / Peer3 receive data, word 3, bit 14	G172, G174
B9315	USS3 / Peer3 receive data, word 3, bit 15	G172, G174

Technology software S00: AND elements with 3 inputs each		
B9350	Output of AND element 1 FB 120	B205
B9351	Output of AND element 2 FB 121	B205
B9352	Output of AND element 3 FB 122	B205
B9353	Output of AND element 4 FB 123	B205
B9354	Output of AND element 5 FB 124	B205
B9355	Output of AND element 6 FB 125	B205
B9356	Output of AND element 7 FB 126	B205
B9357	Output of AND element 8 FB 127	B205
B9358	Output of AND element 9 FB 128	B205
B9359	Output of AND element 10 FB 129	B205
B9360	Output of AND element 11 FB 130	B205
B9361	Output of AND element 12 FB 131	B205
B9362	Output of AND element 13 FB 132	B205
B9363	Output of AND element 14 FB 133	B205
B9364	Output of AND element 15 FB 134	B205
B9365	Output of AND element 16 FB 135	B205
B9366	Output of AND element 17 FB 136	B205
B9367	Output of AND element 18 FB 137	B205
B9368	Output of AND element 19 FB 138	B205
B9369	Output of AND element 20 FB 139	B205
B9370	Output of AND element 21 FB 140	B205
B9371	Output of AND element 22 FB 141	B205
B9372	Output of AND element 23 FB 142	B205
B9373	Output of AND element 24 FB 143	B205
B9374	Output of AND element 25 FB 144	B205
B9375	Output of AND element 26 FB 145	B205
B9376	Output of AND element 27 FB 146	B205
B9377	Output of AND element 28 FB 147	B205

Binector	Name, description		Function diag., Sheet
Technology software S00: OR elements with 3 inputs each			
B9380	Output of OR element 1	FB 150	B206vv
B9381	Output of OR element 2	FB 151	B206
B9382	Output of OR element 3	FB 152	B206
B9383	Output of OR element 4	FB 153	B206
B9384	Output of OR element 5	FB 154	B206
B9385	Output of OR element 6	FB 155	B206
B9386	Output of OR element 7	FB 156	B206
B9387	Output of OR element 8	FB 157	B206
B9388	Output of OR element 9	FB 158	B206
B9389	Output of OR element 10	FB 159	B206
B9390	Output of OR element 11	FB 160	B206
B9391	Output of OR element 12	FB 161	B206
B9392	Output of OR element 13	FB 162	B206
B9393	Output of OR element 14	FB 163	B206
B9394	Output of OR element 15	FB 164	B206
B9395	Output of OR element 16	FB 165	B206
B9396	Output of OR element 17	FB 166	B206
B9397	Output of OR element 18	FB 167	B206
B9398	Output of OR element 19	FB 168	B206
B9399	Output of OR element 20	FB 169	B206

Serial interface 3 (USS2 / Peer-to-peer 3 on G-SST3)		
B9400	USS3 / Peer3 receive data, word 4, bit 0	G172, G174
B9401	USS3 / Peer3 receive data, word 4, bit 1	G172, G174
B9402	USS3 / Peer3 receive data, word 4, bit 2	G172, G174
B9403	USS3 / Peer3 receive data, word 4, bit 3	G172, G174
B9404	USS3 / Peer3 receive data, word 4, bit 4	G172, G174
B9405	USS3 / Peer3 receive data, word 4, bit 5	G172, G174
B9406	USS3 / Peer3 receive data, word 4, bit 6	G172, G174
B9407	USS3 / Peer3 receive data, word 4, bit 7	G172, G174
B9408	USS3 / Peer3 receive data, word 4, bit 8	G172, G174
B9409	USS3 / Peer3 receive data, word 4, bit 9	G172, G174
B9410	USS3 / Peer3 receive data, word 4, bit 10	G172, G174
B9411	USS3 / Peer3 receive data, word 4, bit 11	G172, G174
B9412	USS3 / Peer3 receive data, word 4, bit 12	G172, G174
B9413	USS3 / Peer3 receive data, word 4, bit 13	G172, G174
B9414	USS3 / Peer3 receive data, word 4, bit 14	G172, G174
B9415	USS3 / Peer3 receive data, word 4, bit 15	G172, G174

Technology software S00: Inverters			
B9450	Output of inverter 1	FB 180	B207
B9451	Output of inverter 2	FB 181	B207
B9452	Output of inverter 3	FB 182	B207
B9453	Output of inverter 4	FB 183	B207
B9454	Output of inverter 5	FB 184	B207
B9455	Output of inverter 6	FB 185	B207
B9456	Output of inverter 7	FB 186	B207
B9457	Output of inverter 8	FB 187	B207
B9458	Output of inverter 9	FB 188	B207

Binector	Name, description		Function diag., Sheet
B9459	Output of inverter 10	FB 189	B207
B9460	Output of inverter 11	FB 190	B207
B9461	Output of inverter 12	FB 191	B207
B9462	Output of inverter 13	FB 192	B207
B9463	Output of inverter 14	FB 193	B207
B9464	Output of inverter 15	FB 194	B207
B9465	Output of inverter 16	FB 195	B207

Technology software S00: NAND elements with 3 inputs each			
B9470	Output of NAND element 1	FB 200	B207
B9471	Output of NAND element 2	FB 201	B207
B9472	Output of NAND element 3	FB 202	B207
B9473	Output of NAND element 4	FB 203	B207
B9474	Output of NAND element 5	FB 204	B207
B9475	Output of NAND element 6	FB 205	B207
B9476	Output of NAND element 7	FB 206	B207
B9477	Output of NAND element 8	FB 207	B207
B9478	Output of NAND element 9	FB 208	B207
B9479	Output of NAND element 10	FB 209	B207
B9480	Output of NAND element 11	FB 210	B207
B9481	Output of NAND element 12	FB 211	B207

Technology software S00: Binary signal selector switches			
B9482	Output of binary signal selector switch 1	FB 250	B216
B9483	Output of binary signal selector switch 2	FB 251	B216
B9484	Output of binary signal selector switch 3	FB 252	B216
B9485	Output of binary signal selector switch 4	FB 253	B216
B9486	Output of binary signal selector switch 5	FB 254	B216

Technology software S00: D flipflops			
B9490	D flipflop 1: Output Q	FB 230	B211
B9491	D flipflop 1: Output /Q	FB 230	B211
B9492	D flipflop 2: Output Q	FB 231	B211
B9493	D flipflop 2: Output /Q	FB 231	B211
B9494	D flipflop 3: Output Q	FB 232	B211
B9495	D flipflop 3: Output /Q	FB 232	B211
B9496	D flipflop 4: Output Q	FB 233	B211
B9497	D flipflop 4: Output /Q	FB 233	B211

Technology software S00: Technology controller			
B9499	Ramp-function generator output = ramp-function generator input (y = x)	FB 113	B170

Serial interface 3 (USS3 / Peer-to-peer 3 on G-SST3)		
B9500	USS3 / Peer3 receive data, word 5, bit 0	G172, G174
B9501	USS3 / Peer3 receive data, word 5, bit 1	G172, G174
B9502	USS3 / Peer3 receive data, word 5, bit 2	G172, G174
B9503	USS3 / Peer3 receive data, word 5, bit 3	G172, G174
B9504	USS3 / Peer3 receive data, word 5, bit 4	G172, G174
B9505	USS3 / Peer3 receive data, word 5, bit 5	G172, G174
B9506	USS3 / Peer3 receive data, word 5, bit 6	G172, G174

Binector	Name, description	Function diag., Sheet
B9507	USS3 / Peer3 receive data, word 5, bit 7	G172, G174
B9508	USS3 / Peer3 receive data, word 5, bit 8	G172, G174
B9509	USS3 / Peer3 receive data, word 5, bit 9	G172, G174
B9510	USS3 / Peer3 receive data, word 5, bit 10	G172, G174
B9511	USS3 / Peer3 receive data, word 5, bit 11	G172, G174
B9512	USS3 / Peer3 receive data, word 5, bit 12	G172, G174
B9513	USS3 / Peer3 receive data, word 5, bit 13	G172, G174
B9514	USS3 / Peer3 receive data, word 5, bit 14	G172, G174
B9515	USS3 / Peer3 receive data, word 5, bit 15	G172, G174

Technology software S00: RS flipflops			
B9550	RS flipflop 1: Output Q	FB 215	B210
B9551	RS flipflop 1: Output /Q	FB 215	B210
B9552	RS flipflop 2: Output Q	FB 216	B210
B9553	RS flipflop 2: Output /Q	FB 216	B210
B9554	RS flipflop 3: Output Q	FB 217	B210
B9555	RS flipflop 3: Output /Q	FB 217	B210
B9556	RS flipflop 4: Output Q	FB 218	B210
B9557	RS flipflop 4: Output /Q	FB 218	B210
B9558	RS flipflop 5: Output Q	FB 219	B210
B9559	RS flipflop 5: Output /Q	FB 219	B210
B9560	RS flipflop 6: Output Q	FB 220	B210
B9561	RS flipflop 6: Output /Q	FB 220	B210
B9562	RS flipflop 7: Output Q	FB 221	B210
B9563	RS flipflop 7: Output /Q	FB 221	B210
B9564	RS flipflop 8: Output Q	FB 222	B210
B9565	RS flipflop 8: Output /Q	FB 222	B210
B9566	RS flipflop 9: Output Q	FB 223	B210
B9567	RS flipflop 9: Output /Q	FB 223	B210
B9568	RS flipflop 10: Output Q	FB 224	B210
B9569	RS flipflop 10: Output /Q	FB 224	B210
B9570	RS flipflop 11: Output Q	FB 225	B210
B9571	RS flipflop 11: Output /Q	FB 225	B210
B9572	RS flipflop 12: Output Q	FB 226	B210
B9573	RS flipflop 12: Output /Q	FB 226	B210
B9574	RS flipflop 13: Output Q	FB 227	B210
B9575	RS flipflop 13: Output /Q	FB 227	B210
B9576	RS flipflop 14: Output Q	FB 228	B210
B9577	RS flipflop 14: Output /Q	FB 228	B210

Technology software S00: Timers			
B9580	Timer 1: Output	FB 240	B215
B9581	Timer 1: Output inverted	FB 240	B215
B9582	Timer 2: Output	FB 241	B215
B9583	Timer 2: Output inverted	FB 241	B215
B9584	Timer 3: Output	FB 242	B215
B9585	Timer 3: Output inverted	FB 242	B215
B9586	Timer 4: Output	FB 243	B215
B9587	Timer 4: Output inverted	FB 243	B215
B9588	Timer 5: Output	FB 244	B215

Binector	Name, description		Function diag., Sheet
B9589	Timer 5: Output inverted	FB 244	B215
B9590	Timer 6: Output	FB 245	B215
B9591	Timer 6: Output inverted	FB 245	B215
B9592	Timer 7: Output	FB 246	B215
B9593	Timer 7: Output inverted	FB 246	B215
B9594	Timer 8: Output	FB 247	B215
B9595	Timer 8: Output inverted	FB 247	B215
B9596	Timer 9: Output	FB 248	B215
B9597	Timer 9: Output inverted	FB 248	B215
B9598	Timer 10: Output	FB 249	B215
B9599	Timer 10: Output inverted	FB 249	B215

Serial interface 3 (USS3 / Peer-to-peer 3 on G-SST3)		
B9600	USS3 receive data, word 6, bit 0	G172
B9601	USS3 receive data, word 6, bit 1	G172
B9602	USS3 receive data, word 6, bit 2	G172
B9603	USS3 receive data, word 6, bit 3	G172
B9604	USS3 receive data, word 6, bit 4	G172
B9605	USS3 receive data, word 6, bit 5	G172
B9606	USS3 receive data, word 6, bit 6	G172
B9607	USS3 receive data, word 6, bit 7	G172
B9608	USS3 receive data, word 6, bit 8	G172
B9609	USS3 receive data, word 6, bit 9	G172
B9610	USS3 receive data, word 6, bit 10	G172
B9611	USS3 receive data, word 6, bit 11	G172
B9612	USS3 receive data, word 6, bit 12	G172
B9613	USS3 receive data, word 6, bit 13	G172
B9614	USS3 receive data, word 6, bit 14	G172
B9615	USS3 receive data, word 6, bit 15	G172

Technology software S00: PI controller		[SW 1.8 and later]	
B9650	PI controller 1: Controller at output limitation	FB 260	B180
B9652	PI controller 3: Controller at output limitation	FB 262	B182
B9653	PI controller 4: Controller at output limitation	FB 263	B183
B9654	PI controller 5: Controller at output limitation	FB 264	B184
B9655	PI controller 6: Controller at output limitation	FB 265	B185
B9656	PI controller 7: Controller at output limitation	FB 266	B186
B9657	PI controller 8: Controller at output limitation	FB 267	B187
B9658	PI controller 9: Controller at output limitation	FB 268	B188
B9659	PI controller 10: Controller at output limitation	FB 269	B189
B9660	PI controller 1: Controller at positive output limitation	FB 260	B180
B9661	PI controller 2: Controller at positive output limitation	FB 261	B181
B9662	PI controller 3: Controller at positive output limitation	FB 262	B182
B9663	PI controller 4: Controller at positive output limitation	FB 263	B183
B9664	PI controller 5: Controller at positive output limitation	FB 264	B184
B9665	PI controller 6: Controller at positive output limitation	FB 265	B185
B9666	PI controller 7: Controller at positive output limitation	FB 266	B186
B9667	PI controller 8: Controller at positive output limitation	FB 267	B187
B9668	PI controller 9: Controller at positive output limitation	FB 268	B188
B9669	PI controller 10: Controller at positive output limitation	FB 269	B189

Binector	Name, description			Function diag., Sheet
B9670	PI controller 1: Controller at negative output limitation		FB 260	B180
B9671	PI controller 2: Controller at negative output limitation		FB 261	B181
B9672	PI controller 3: Controller at negative output limitation		FB 262	B182
B9673	PI controller 4: Controller at negative output limitation		FB 263	B183
B9674	PI controller 5: Controller at negative output limitation		FB 264	B184
B9675	PI controller 6: Controller at negative output limitation		FB 265	B185
B9676	PI controller 7: Controller at negative output limitation		FB 266	B186
B9677	PI controller 8: Controller at negative output limitation		FB 267	B187
B9678	PI controller 9: Controller at negative output limitation		FB 268	B188
B9679	PI controller 10: Controller at negative output limitation		FB 269	B189

S00 technology software: Limit-value monitors for double-word connectors				
B9680	Limit-value monitor 1: |A| < B has responded	[SW 1.9 and later]	FB 68	B151
B9681	Limit-value monitor 1: A < B has responded	[SW 1.9 and later]	FB 68	B151
B9682	Limit-value monitor 1: A = B has responded	[SW 1.9 and later]	FB 68	B151
B9683	Limit-value monitor 2: |A| < B has responded	[SW 1.9 and later]	FB 69	B151
B9684	Limit-value monitor 2: A < B has responded	[SW 1.9 and later]	FB 69	B151
B9685	Limit-value monitor 2: A = B has responded	[SW 1.9 and later]	FB 69	B151

Technology software S00: root extractor				
B9686	|root extractor input| < threshold responded	[SW 2.0 and later]	FB 58	B153
B9687	|root extractor input| < threshold responded (inverted)	[SW 2.0 and later]	FB 58	B153

Serial interface 3 (USS3 / Peer-to-peer 3 on G-SST3)		
B9700	USS3 receive data, word 7, bit 0	G172
B9701	USS3 receive data, word 7, bit 1	G172
B9702	USS3 receive data, word 7, bit 2	G172
B9703	USS3 receive data, word 7, bit 3	G172
B9704	USS3 receive data, word 7, bit 4	G172
B9705	USS3 receive data, word 7, bit 5	G172
B9706	USS3 receive data, word 7, bit 6	G172
B9707	USS3 receive data, word 7, bit 7	G172
B9708	USS3 receive data, word 7, bit 8	G172
B9709	USS3 receive data, word 7, bit 9	G172
B9710	USS3 receive data, word 7, bit 10	G172
B9711	USS3 receive data, word 7, bit 11	G172
B9712	USS3 receive data, word 7, bit 12	G172
B9713	USS3 receive data, word 7, bit 13	G172
B9714	USS3 receive data, word 7, bit 14	G172
B9715	USS3 receive data, word 7, bit 15	G172
B9800	USS3 receive data, word 8, bit 0	G172
B9801	USS3 receive data, word 8, bit 1	G172
B9802	USS3 receive data, word 8, bit 2	G172
B9803	USS3 receive data, word 8, bit 3	G172
B9804	USS3 receive data, word 8, bit 4	G172
B9805	USS3 receive data, word 8, bit 5	G172
B9806	USS3 receive data, word 8, bit 6	G172
B9807	USS3 receive data, word 8, bit 7	G172
B9808	USS3 receive data, word 8, bit 8	G172
B9809	USS3 receive data, word 8, bit 9	G172

Binector	Name, description	Function diag., Sheet
B9810	USS3 receive data, word 8, bit 10	G172
B9811	USS3 receive data, word 8, bit 11	G172
B9812	USS3 receive data, word 8, bit 12	G172
B9813	USS3 receive data, word 8, bit 13	G172
B9814	USS3 receive data, word 8, bit 14	G172
B9815	USS3 receive data, word 8, bit 15	G172
B9900	USS3 receive data, word 9, bit 0	G172
B9901	USS3 receive data, word 9, bit 1	G172
B9902	USS3 receive data, word 9, bit 2	G172
B9903	USS3 receive data, word 9, bit 3	G172
B9904	USS3 receive data, word 9, bit 4	G172
B9905	USS3 receive data, word 9, bit 5	G172
B9906	USS3 receive data, word 9, bit 6	G172
B9907	USS3 receive data, word 9, bit 7	G172
B9908	USS3 receive data, word 9, bit 8	G172
B9909	USS3 receive data, word 9, bit 9	G172
B9910	USS3 receive data, word 9, bit 10	G172
B9911	USS3 receive data, word 9, bit 11	G172
B9912	USS3 receive data, word 9, bit 12	G172
B9913	USS3 receive data, word 9, bit 13	G172
B9914	USS3 receive data, word 9, bit 14	G172
B9915	USS3 receive data, word 9, bit 15	G172

Trace function		
B9999	Trigger condition of trace function is fulfilled [SW 1.8 and later]	

13 Maintenance

WARNING

Hazardous voltages are present in this electrical equipment during operation.

A hazardous voltage may be present at the signalling relays in the customer installation.

Non-observance of the safety instructions can result in death, severe personal injury or substantial property damage.

When carrying out maintenance work on this converter, please read all safety instructions included in this section and attached to the product itself.

- Maintenance work on the converter may be carried out only by qualified personnel who are thoroughly familiar with all safety notices in this manual and with the installation, operating and maintenance instructions.
- Before carrying out visual checks and maintenance work, ensure that the AC power supply is disconnected and locked out and that the converter is grounded. Before the AC supply is disconnected, both converters and motors are at hazardous voltage levels. Even when the converter contactor is open, hazardous voltages are still present.
- The snubber capacitors continue to carry hazardous voltage for up to 2 minutes after isolation from the supply. For this reason, the converter must not be opened for at least two minutes after switch-off.

Only spare parts authorized by the manufacturer may be used.

The SIMOTRAS HD converter must be thoroughly protected against the ingress of dirt so as to prevent voltage flashovers and thus irreparable damage. Dust and foreign bodies, and especially contamination drawn in through the cooling air flow, must be carefully removed at regular intervals depending on the degree of pollution, but at least once every 12 months. The converter must be cleaned with dry, compressed air, max. 1 bar, or with a vacuum cleaner.

Please note the following with respect to SIMOTRAS HD converters with forced air cooling:

The fan bearings are designed for a service lifetime of 30000 hours. The fans should be replaced in plenty of time in order to maintain the availability of the thyristor sets.

13.1 Procedure for updating software

(Upgrading to a new software version)

CAUTION

Before updating your software, find out the product state of your SIMOTRAS HD device. You will find this on the rating plate (field on the bottom left-hand side "Prod. State").

Prod. State = A1,A2 (devices with the CUD1 electronics board, version C98043-A7001-L1-xx):
It is only permissible to load software versions 1.xx and 2.xx.

Prod. State = A3 (devices with the CUD1 electronics board, version C98043-A7001-L2-xx):
It is only permissible to load software versions 3.xx.

In the Internet at http://support.automation.siemens.com/WW/view/en/10804957/133100

a WINDOWS-based version of the loading program is available (HEXLOAD_WIN.EXE). This program is started by double clicking on it in step 5 of the procedure described below for updating software.
USB-RS232 interface converters are supported.

1 Read out and write down all parameter contents.
(also note software version in r060.001 and r065.001!)

Note:
The parameter set can be transferred to a PC or programming device by means of DriveMonitor (see also Section 15).

2 Switch off electronics power supply

3 Connect one COM port on the PC to connector X300 on the converter

Cable order number: 9AK1012-1AA00
(see also Section 15.3)

4 Switch on electronics power supply AND press down the UP key on the PMU of the SIMOTRAS HD converter at the same time

⇒ The SIMOTRAS HD converter switches to operating state o13.0

Note:
A software update can be started only from the PMU panel and not via an OP1S or the DriveMonitor system

5 Open a DOS window on the PC and enter program call:

```
HEXLOAD 7001Axxx.H86 7001Bxxx.H86 COMx
```

Start the program by pressing Return

⇒ The software update is performed automatically

Note:
HEXLOAD.EXE: Loading program

7001Axxx.H86 and 7001Bxxx.H86:
Data files which contain the SIMOTRAS software xxx is the SW release

COMx: COM1 or COM2

6 ⇒ When the software has been updated successfully, the SIMOTRAS HD switches to operating state o13.2 for approx. 1 s

⇒ The SIMOTRAS HD converter then switches to operating state o12.9 in many cases (depending on which SW version was previously installed in the converter) for approximately 15s.

Note:
The currently programmed addressed is displayed on the PMU while the update is in progress

The current status of the update routine is displayed on the PC

7 Check the checksum:
Comparison of the value of parameter r062.001 with the checksum in the Internet under menu item "Info" (see the inside page of the cover sheet of the operation instructions).

8 Was the electronics supply disconnected while Step 6 was in progress?

? yes

9b Acknowledge any fault message that may appear on the SIMOTRAS HD device

10b Restore default setting
(see Section 7.4)

11b Start up the converter again
(see Section 7.5)
Note:
The parameter set stored in Step 1 above can be loaded from a PC or programming device by means of DriveMonitor.

no

12 **End**

13.2 Replacement of components

13.2.1 Replacement of fan

WARNING

The converter fan may be replaced only by properly qualified personnel.

The snubber capacitors continue to carry hazardous voltage for up to 2 minutes after isolation from the supply. For this reason, the converter must not be opened for at least two minutes after switch-off.

Non-observance of the safety instructions can result in death, severe personal injury or substantial property damage.

Replacement of fan on D400 / 98 – 180 Mre converters

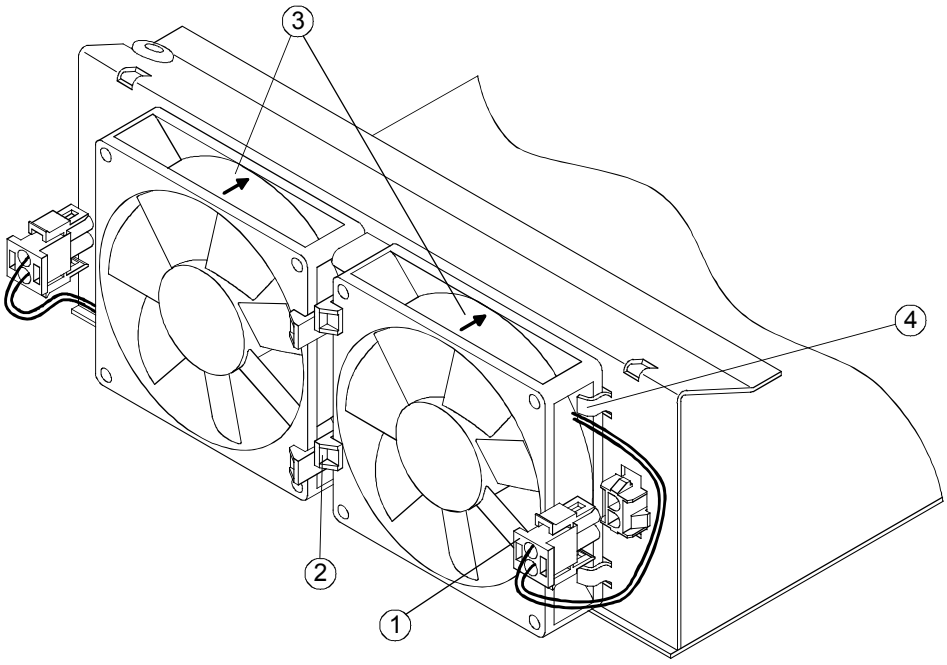

The two fans are mounted on the underside of the converter.

- Remove connector ①.
- Release the two retaining clips ② on the fan and swing fan out downwards.

Installation:

- When mounting the fan make sure it is in the correct mounting position (blowing direction upward, see arrow ③ on the fan housing).
- Insert the fan into lugs ④ and push upwards until it engages in retaining clips ②
- Insert connector ① again.

Replacement of fan on D400 / 225 – 525 Mre and D500 / 360 Mre converters

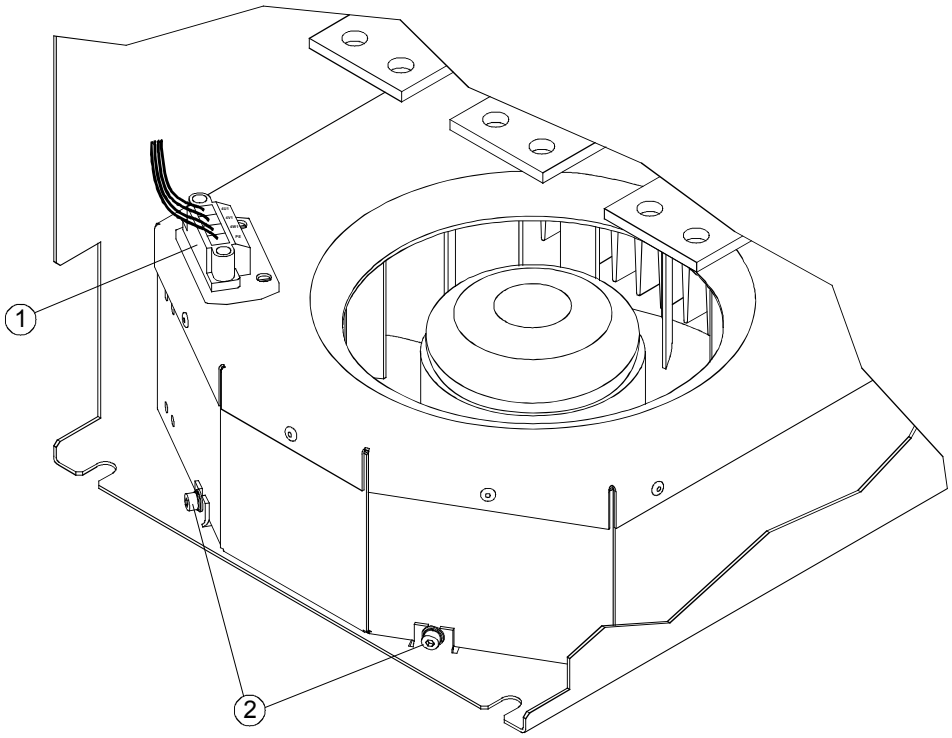

The fan is mounted on the underside of the converter.

- Remove connector ①.
- Use a T20 screwdriver to undo the two Torx screws ②.
- Lift the fan using the fixing straps and pull out downwards.

Installation:

- Push fan box up along the rear panel right up over the fixing clips.
- Tighten the two Torx screws ② with 2.5 Nm.
- Insert connector ①.

Replacement of fan on D400 / 680 Mre converters

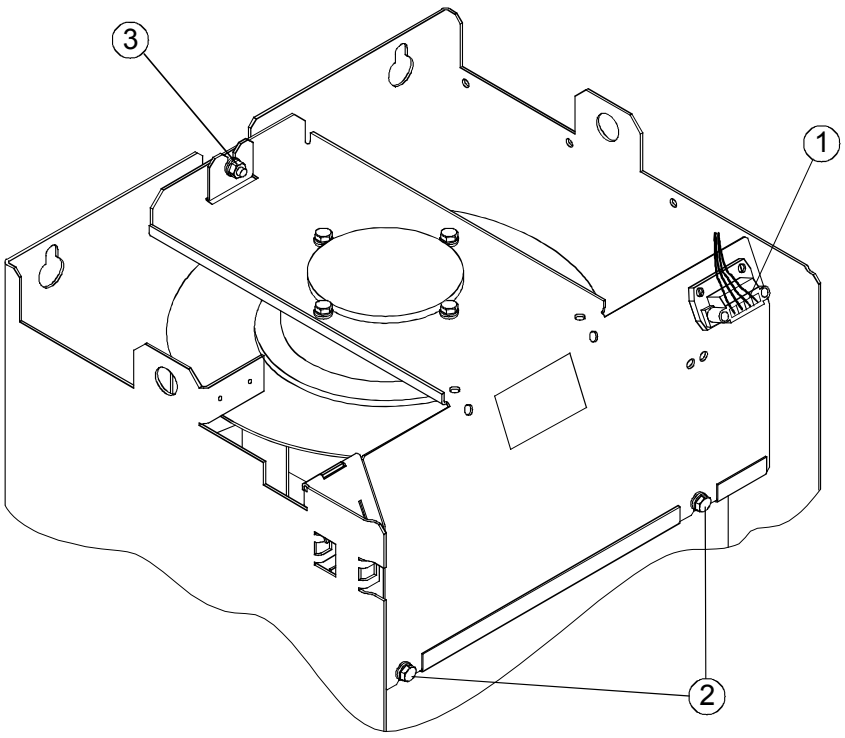

The fan is mounted on top of the converter.

- Remove connector ①.
- Use a T20 screwdriver to undo the two Torx screws ②.
- Undo the M6 hexagonal nut ③.
- Pull fan upwards out of its guideway and then forwards to remove.

Installation:

- Insert fan into guideway from above.
- Tighten the two Torx screws ② with 10 Nm.
- Tighten hexagonal nut M6 ③ with 10 Nm.
- Insert connector ①.

Replacement of fan on D400 / 900 Mre converters

WARNING

When dismantling the fan-mounting box, please remember that it weighs 12 kg.

Non-observance of this warning can result in severe personal injury or substantial property damage.

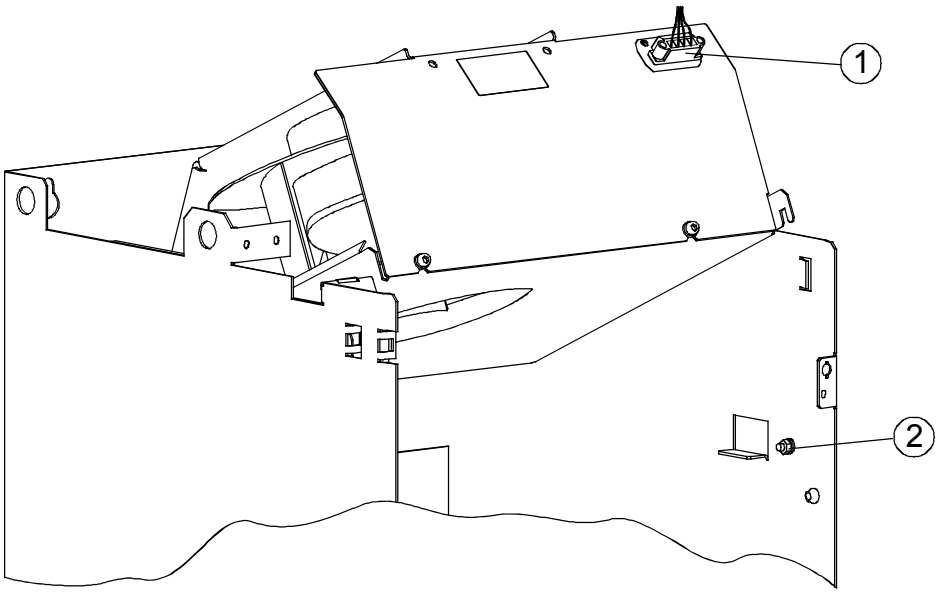

The fan is mounted on top of the converter.

- Remove connector ①.
- Undo the M6 hexagonal nut ②.
- Swing fan upwards and pull it out towards you.

Installation:

- Tilting the fan from the front and upward (see Fig.), slot it into the two rear guide tabs and then tilt it downward as far as it will go.
- Tighten hexagonal nut M6 ② with 10 Nm.
- Insert connector ①.

13.2.2 Replacement of PCBs



WARNING

PCBs may be replaced only by properly qualified personnel.

PCBs must not be removed or inserted when the power supply is connected.

Non-observance of the safety instructions can result in death, severe personal injury or substantial property damage.



CAUTION

PCBs contains electrostatically sensitive devices. Before touching a PCB, the person carrying out the work must himself be electrostatically discharged. The simplest way of doing this is to touch an electrically conductive earthed object, e.g. socket outlet earth contact.

13.2.3 Replacement of thyristor modules on D400 / 60 – 680 Mre and D500 / 360 Mre converters

The thyristor modules are mounted by means of self-tapping screws. When a module is replaced, the support surfaces on the heatsink must be cleaned and a new layer of thermo-lubricant applied to the thyristor module. To fix the modules always use screws with a metric thread of the same length as the original screws and fixing elements (washer and spring lock washer). When screwing the modules to the busbars, also use screws with a metric thread and the same length as the original screws and fixing elements (washer and spring lock washer).

NOTICE
The layer of thermo-lubricant (silicone-free, type H-T-C made by Electrolube) applied to the modules must be so thin and even that the baseplate is still clearly visible underneath!
No auxiliary cathodes must be contacted on the standby modules!

Module design	
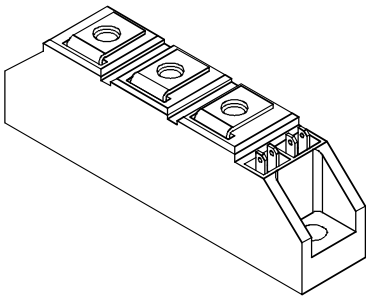 Tightening torque on module: 3,5 Nm Tightening torque of current terminals: 3 Nm	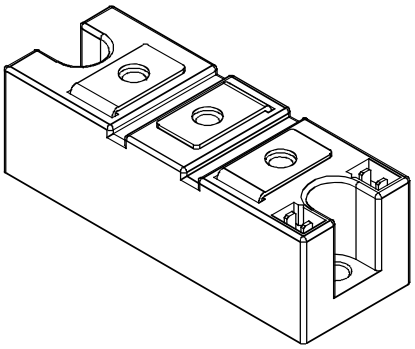 Tightening torque on module: 3,5 Nm Tightening torque of current terminals: 5 Nm
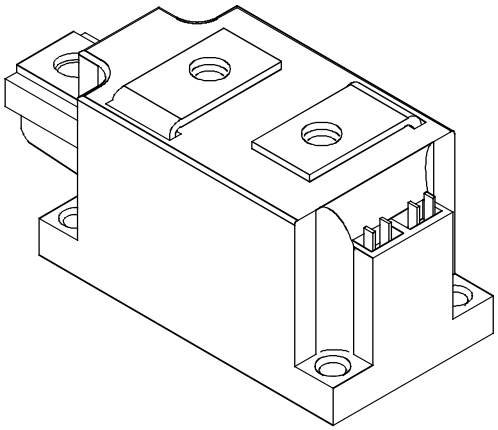 Tightening torque on module: 6 Nm Tightening torque of current terminals: 12 Nm	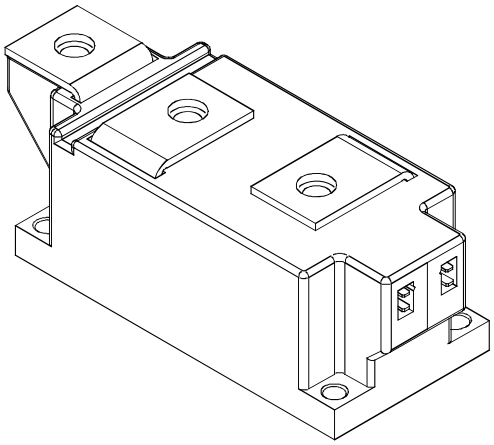 Tightening torque on module: 6 Nm Tightening torque of current terminals: 15 Nm

13.2.4 Replacement of fuses and thyristor assemblies on D400 / 900 Mre converters

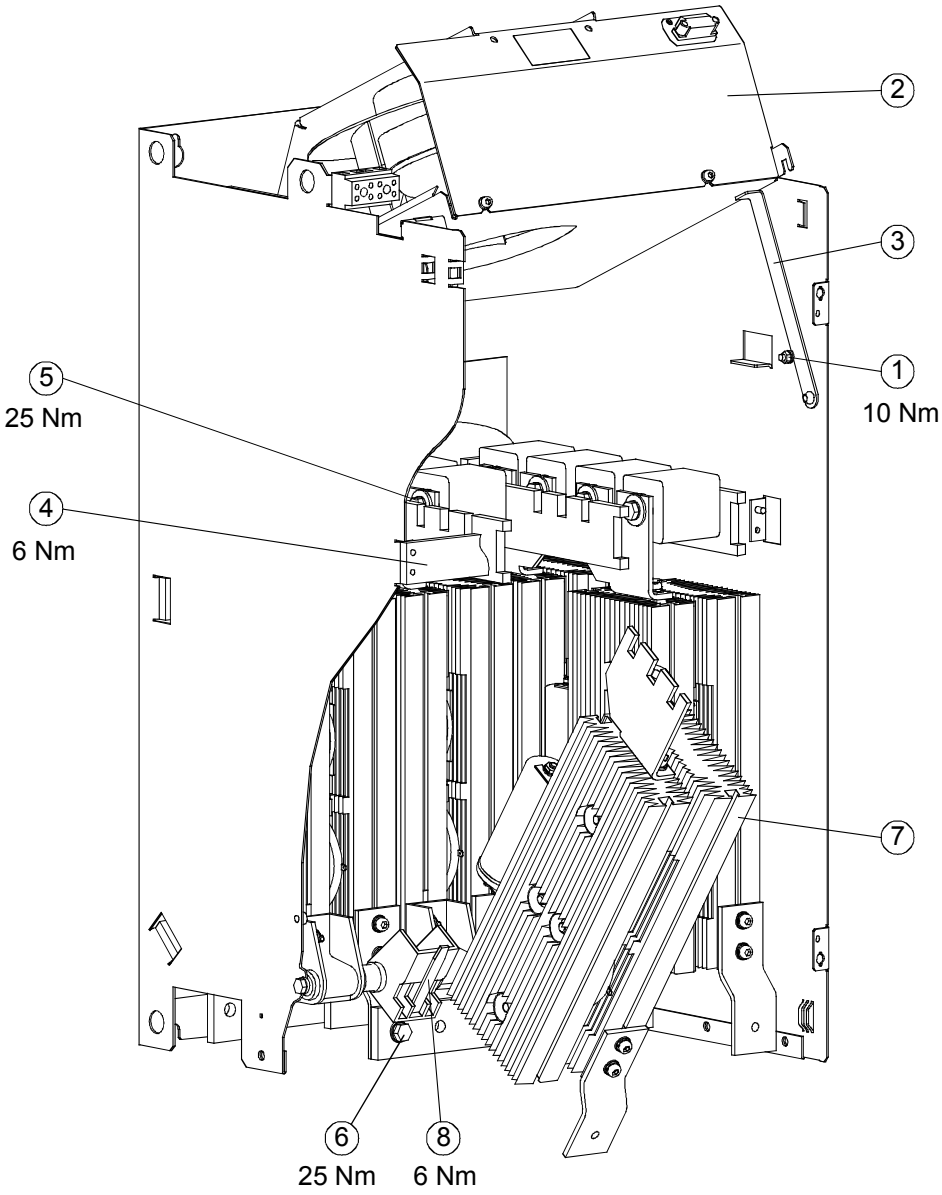

- Undo the M6 hexagonal nut ①.
- Swing the fan ② upwards and hold in place with support rail ③.
- Remove the brace ④ with the attached protective cover by undoing the 2 M6 hexagon-head screws.
- Remove fuses ⑤ by undoing the 2 hexagon-head screws on each (M10 or M12 depending on converter model).
- Undo the M10 hexagon-head screw ⑥ and swing thyristor assembly ⑦ out towards you.
- Undo assembly locking mechanism (M6 hexagonal nut) ⑧, then pull out thyristor assembly ⑦ upwards at an angle.
- Install the new components in the reverse order.

Caution: The fuse mounting screws are of different lengths!

14 Servicing / Spare parts

14.1 Servicing

Central contact:

Siemens AG
Industrie
Fürth Retouren-Center Region Bayern
Siemensstraße 2
90766 Fürth, Germany
Tel +49 (0)911 750 96 88
Fax +49 (0)911 750 40 30
rcbay.industry@siemens.com

http://www.automation.siemens.com/aspa_app/contactmenu.aspx?nodeKey=key_9175191

14.2 Spare parts

NOTE
If you contact us with a query, please specify the following converter data: • Converter order number and serial number • Software version • Hardware version of electronics board (screen printing on component side) • Hardware version and software version of supplementary boards (if installed)

Software:

Can be downloaded from the Internet (see inside front cover for address)

Accessories:

Supplementary boards, pulse encoders, adapters, etc., see Section 2.2

Spare part		Converter / Order No.												
Order No. (MLFB)	**Description**	500V/60A	500V/78A	500V/98A	500V/112A	500V/142A	500V/180A	500V/225A	500V/285A	500V/360A*)	500V/525A	500V/680A	500V/900A	690V/360A*)
		6SG7050-0EB60-0	6SG7052-0EB60-0	6SG7055-0EB60-0	6SG7060-0EB60-0	6SG7062-0EB60-0	6SG7065-0EB60-0	6SG7070-0EB60-0	6SG7072-0EB60-0	6SG7076-0EB60-0	6SG7080-0EB60-0	6SG7082-0EB60-0	6SG7085-0EB60-0	6SG7076-0KB60-0
	Printed circuit boards													
6RY1703-0AA01	Electronics + terminals A7001-L2	1x	1x	1x	1x	1x	1x	1x	1x	1x	1x	1x	1x	1x
6RY1703-1HD06	Power interface + terminals A7022-L4	1x	1x	1x	1x	1x	1x	1x	1x	1x	1x	1x	1x	
6RY1703-1HD04	Power interface + terminals A7022-L6													1x
6RY1704-0AA00	Operator panel A7005-L1	1x	1x	1x	1x	1x	1x	1x	1x	1x	1x	1x	1x	1x
6RY1703-1HD02	Snubber circuit A7021-L1	1x	1x	1x	1x	1x	1x	1x	1x	1x				
6RY1703-1HD03	Snubber circuit A7011-L7										1x	1x		
6RY1703-1HD05	Snubber circuit A7011-L3													1x
	Thyristors													
6RY1700-0HD01	W98624-S7000-C2 SKKT72/16E	5x												
6RY1700-0AA05	W98624-S1002-C82 SKKT106/18EH1		5x	5x	5x									
6SY7010-0AA02	W97020-Z1009—C412 TT162 N16					5x	5x							
6RY1700-0AA15	W98624-S7000-C1 MCC170-16 i01							5x						
6SY7010-0AA03	W98624-S1002-C8 TT251 N16								5x					
6SY7010-0AA05	W98624-S1002-C48 MCC312-16I01									5x				
6SY7010-0AA04	W98624-S1002-C39 TT500 N16										5x			
6RY1700-0AA04	W98624-S1002-C97 TT570N16											5x		
6RY1702-0CA01	Thyristor assembly C98130-A1256-B320												5x	
6SY7010-0AA32	W98624-S1002-C68 TT430 N26 KOF													5x

*) with option H70:
self-ventilated with rated current =130 A

Spare part		Converter / Order No.												
Order No. (MLFB)	**Description**	500V/60A	500V/78A	500V/98A	500V/112A	500V/142A	500V/180A	500V/225A	500V/285A	500V/360A*)	500V/525A	500V/680A	500V/900A	690V/360A*)
		6SG7050-0EB60-0	6SG7052-0EB60-0	6SG7055-0EB60-0	6SG7060-0EB60-0	6SG7062-0EB60-0	6SG7065-0EB60-0	6SG7070-0EB60-0	6SG7072-0EB60-0	6SG7076-0EB60-0	6SG7080-0EB60-0	6SG7082-0EB60-0	6SG7085-0EB60-0	6SG7076-0KB60-0
	Other spare parts													
6SY7010-6AA01	NTC thermistor W98628-S1001-C24	1x	1x	1x	1x	1x	1x	1x	1x	1x	1x	1x		1x
6RY1700-0TF00	NTC thermistor C98130-A7002-C90												1x	
6RY1702-0AA01	Current convertor C98130-A1023-C751	2x	2x	2x	2x									
6RY1702-0AA02	Current convertor C98130-A1023-C752					2x	2x							
6RY1702-0AA03	Current convertor C98130-A1023-C771							2x	2x	2x				
6RY1702-0AA06	Current convertor C98130-A1023-C850										2x	2x		2x
6RY1702-0AA05	Current convertor C98130-A1023-C773												2x	
6RY1701-0AA07	Fan (complete) C98130-A1256-C553			2x	2x	2x	2x							
6RY1701-0AA08	Fan module C98130-A7056-B130							1x	1x	1x *)	1x			1x *)
6RY1701-0AA04	Fan radial C98247-S1002-C25											1x	1x	
6RY1705-0AA02	Snubber resistance W98511-S1001-C207										3x			
6SY7010-3AA06	Snubber resistance W98511-S1001-C105											5x		
6RY1705-0AA01	Snubber resistance W98511-S1001-C208													6x
6RY1702-0BA00	Fuse-link F1,F2 C97327-Z1006-C215	2x	2x	2x	2x	2x	2x	2x	2x	2x	2x	2x	2x	2x
6RY1702-0BA01	Fuse-links C98327-S1002-C83												3x	

*) with option H70:
self-ventilated with rated current =130 A

15 DriveMonitor

The DriveMonitor software tool is available to assist the start-up, parameterization and diagnosis of SIMOTRAS HD 6SG70 units via a PC.

15.1 Scope of delivery

DriveMonitor is supplied on a CD-ROM together with the operating manual.

Order No. 6SG7000-0CD00

It can also be ordered as an option in conjunction 6SG70units. The relevant short code for this option is D64.

15.2 Installing the software

Run the “start.htm” file from the CD-ROM in your Windows Explorer.

After you have chosen an installation language you can call the DriveMonitor installation routine by selecting the links DriveMonitor – Start Installation.

Then follow the instructions displayed by the installation routine.

The default installation path for DriveMonitor is C:\Program Files\Siemens\DriveMonitor\
A "DriveMonitor" icon is also placed on your desktop.

Note
Please read the informations about the system requirements in the readme-file.

15.3 Connecting the SIMOTRAS HD to the PC

The simplest method is to link connector X300 in the front panel of the SIMOTRAS HD unit to a COM port on the PC using the connecting cable available under order no. 9AK1012-1AA00.

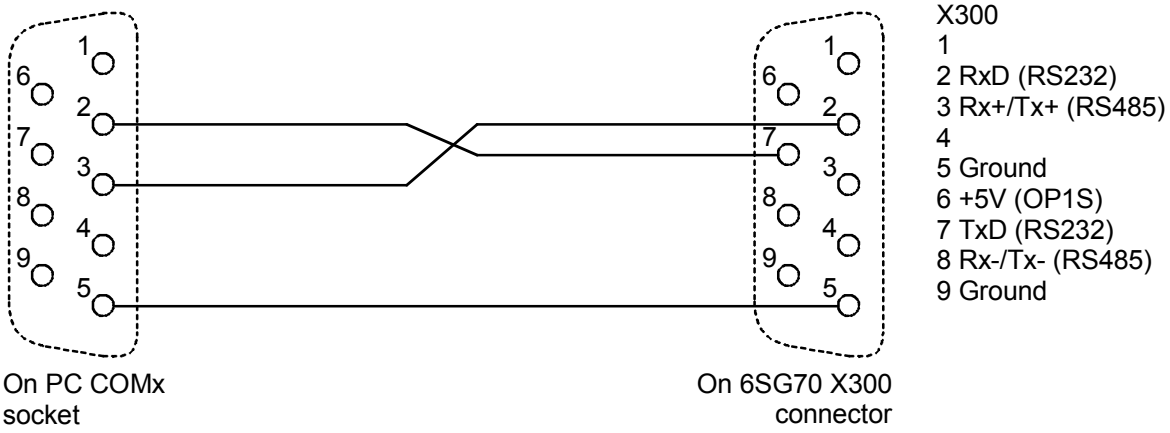

15.4 Setting up an online link to the SIMOTRAS HD

DriveMonitor always starts in offline mode. For this reason, you must open or create an offline file which has been set up specifically for the device and software version:

To open an existing offline file:

- File - Open *<select parameter file>*
  (if the parameter file has been created in SIMOVIS, the drive type SIMOTRAS 6SG70 and the software version used must then be set. If you want to set up an online link to the drive, you must click the ONLINE button and enter the bus address set in the device)

To create a new offline file:

- File - New - Based on Factory Setting <select drive type and software version> *. (If you want to set up an online link to the drive, you must click the ONLINE button and enter the bus address set in the device)*
  <enter file name>
- File - New - Empty Parameter Set <select drive type and software version> *(If you want to set up an online link to the drive, you must click the ONLINE button and enter the bus address set in the device) <enter file name>*

The data regarding drive type and software version are stored in the DNL file. You can then start the program in future by the normal Windows method, i.e. by double clicking on a DNL file, without further system queries.

You can open the ONLINE Settings screen under Options to check, and if necessary change, the interface parameters such as COM port and baud rate.

You can set the bus address and number of transmitted process data under File - Drive Settings.

To switch to online mode, select View - Online or the appropriate button on the toolbar. If the message "Device is not networked" then appears, then "Offline mode" is currently selected. You can switch to online mode under File - Drive Settings.

15.5 Further information

The engineering tool Drive ES is available for the diagnosis of complex installations containing several drives as well as PROFIBUS-based drive communication.

Several different packages of Drive ES are available:

- Drive ES Basic — Data management in Step 7 projects, drive communications via Profibus or USS
  Order No.:6SW1700-5JA00-1AA0
- Drive ES Graphic — Interconnection of Option S00 free functions blocks using the CFC interconnection editor
  Order No.:6SW1700-5JB00-1AA0
- Drive ES Simatic — Provides function blocks for SIMATIC CPUs and sample projects for communication with a SIMOREG (SIMOTRAS) unit
  Order No.:6SW1700-5JC00-1AA0

16 Environmental compatibility

Environmental aspects of development

The number of parts has been greatly reduced through the use of highly integrated components and a modular design of the entire converter series. As a consequence, the power consumed in the production process is significantly lower.

Particular importance has been attached to reducing the volume, mass and diversity of metal and plastic parts.

Front components:	PC + ABC	Bayblend
	ABS	Novodur
Plastic components in converter:	ABS	Novodur
	PA 6.6	
	SE1-GFN1	Noryl
Insulation:	PC (FR) fl	Makrolon or Lexan
Keyboard membrane:	Polyester membrane 0.15 mm	
Rating plate:	Polyester membrane	

Flame arresters containing halogen and insulating materials containing silicone have been replaced by pollutant-free materials on all major components.

Environmental compatibility was an important criterion in the selection of supplied parts.

Environmental aspects of production

Most supplied parts are shipped in reusable packaging. The packaging material itself is recyclable, consisting mainly of cardboard.

With the exception of the converter housing, surface coating materials have not been applied.

The production process is free of emissions.

Environmental aspects of disposal

The unit features screw and snap-on connections that can be separated easily to dismantle it into recyclable mechanical components.

The printed circuit boards can be disposed of by thermal processing. The percentage of components containing dangerous substances is low.

17 Configuration example

Overview

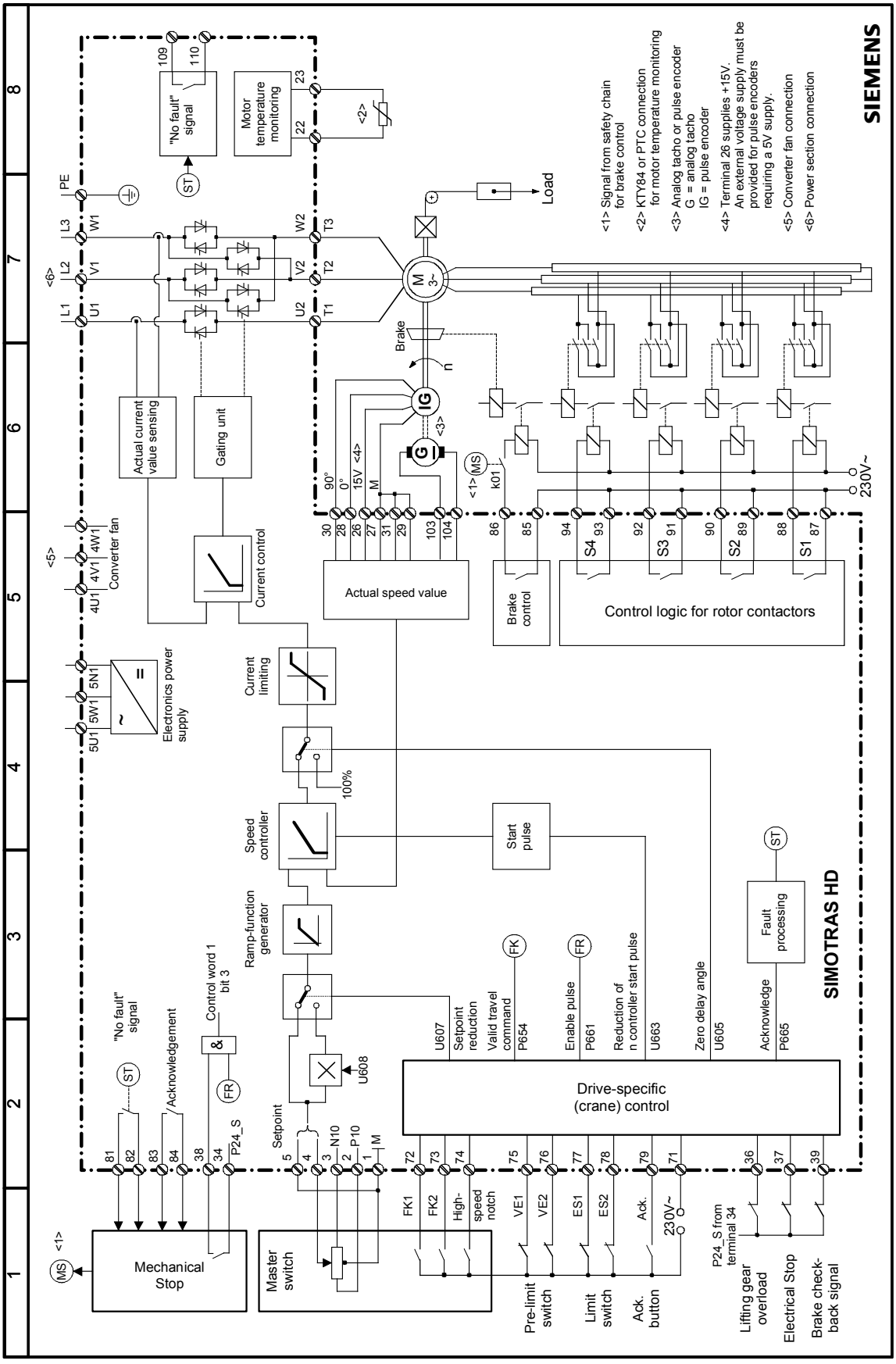

Figure 1, Block diagram

17.1 Task

The task is to design a crane drive with 100 kW output and a four-pole motor with a duty cycle of S3-60%.

The task includes the design of the following components, including the ordering information.

- Motor and accessories
- Converter and any accessories required
- Rotor resistors
- Rotor contactors
- Master switch

Note

- Catalog HE 1 • 1999 will be required when selecting the necessary components. The accessories for SIMOTRAS HD can be found in Catalog DA 65.10 • 1998/99.
- The SIMOTRAS HD three-phase power controller will be included in the Catalog at a later date.

17.2 Selecting a motor

The following motor, which has 3 integral and interconnected temperature sensors that will shut down the motor if an overtemperature occurs, is to be used (see Catalog HE 1, page 2/19):

Order No.: 1LT8310-4AA40-Z, Z = A11.

The relevant data with respect to the design of the rheostatic controller and the three-phase power controller are:

- Rated motor current i_1 = 173 A
- Rotor current i_2 = 199 A
- Locked-rotor voltage u_2 = 310 V
- Characteristic rotor resistance k = 0.9

Formula for k: $k = \dfrac{u_2}{(i_2 \times \sqrt{3})}$

The characteristic rotor resistance is required in order to select the correct rotor resistors (see Section 17.4).

17.3 Selecting an actual value sensor

A pulse encoder is the preferred type of actual value sensor.

The pulse encoder is ordered quoting a short code, e.g. H73 (Catalog M11 • 1999), and a flange such as G37. The pulse encoder in this case is a Hübner HOG 10 D 1024 I.

17.4 Selecting a rotor resistor

Please note

- 4 contactor stages are to be configured. This circuit is recommended.
- Do not use any special resistor packet assemblies!
- Resistor banks of the same size should always be used (5th digit of order number). Reasons: Simpler spare parts holding and easier to install when the resistor banks are installed above one another.
- A 3PR3, HE 1 cast-iron resistor bank (see page 3/40 ff.) is used.

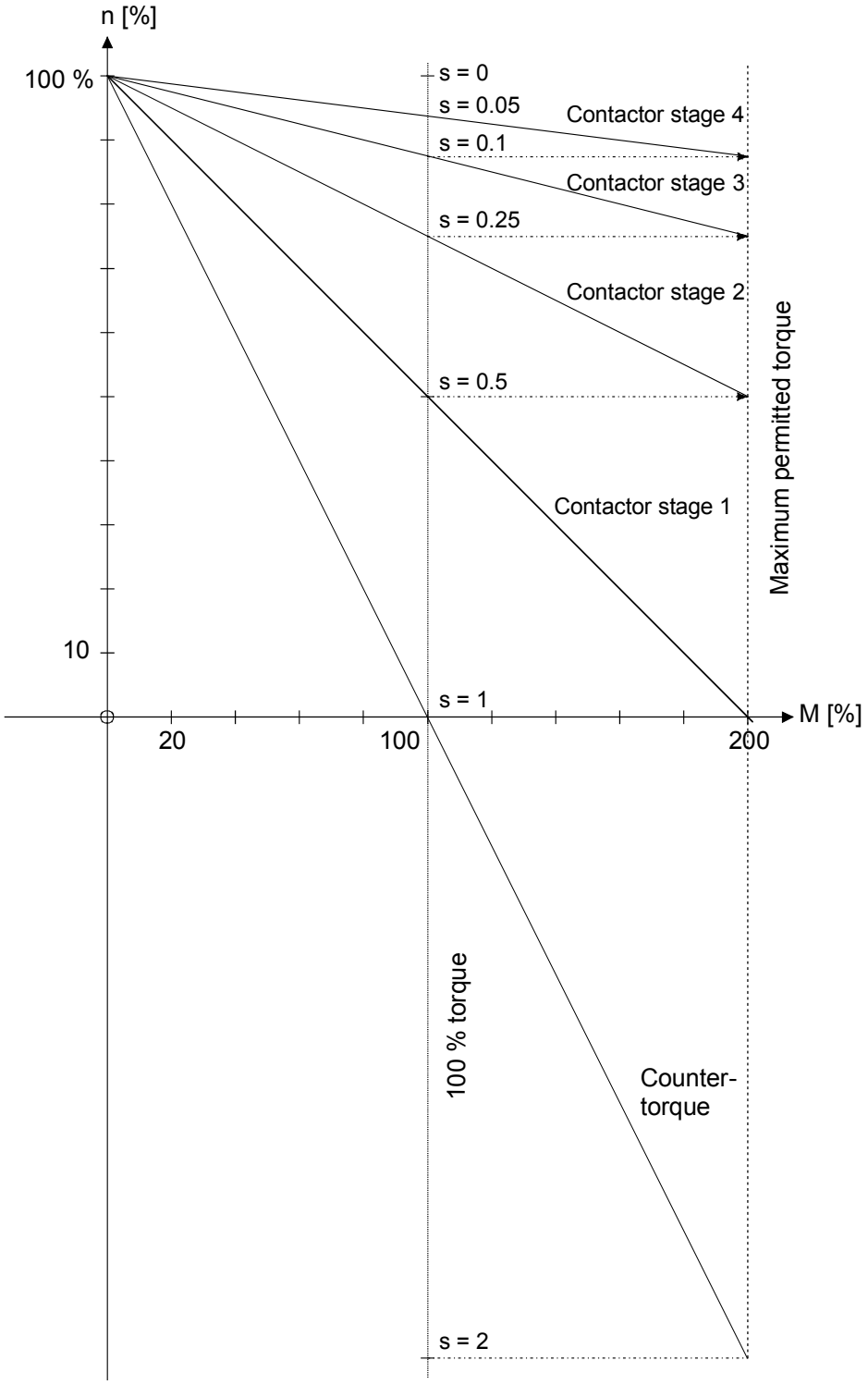

Figure 2, Speed-torque diagram with 4 contactor stages

Notes to Figure 2

- The maximum torque is determined by the converter or the pull-out torque of the motor. In this case the rated controller current is based on two times the overload figure.
- The characteristic curves can also be different, especially for contactor stage 1, as the position of the curves varies from application to application.

Resistor selection table

Contactor stage	s	R = s x k	ü	$I_R = i_2$ x ü	Selected resistance value	Calculated tap/ tap terminal	Order number
4	0.05	0.05 Ω	1.2	239 A	3 x 0.07 Ω	71 % / 9	3PR3 801-3B
3	0.1	0.1 Ω	1	199 A	3 x 0.07 Ω	43 % / 5	3PR3 801-3B
2	0.25	0.23 Ω	1	199A	3 x 0.19 Ω	47 % / 5	3PR3 801-3E
1	0,5	0.45 Ω	1	199 A	3 x 0.26 Ω	46 % / 5	3PR3 801-3F
Y	1	1.8 Ω	0.6	119 A	3 x 1.4 Ω	86 % / 9	3PR3 801-3L

- s: slip, see Figure 2, speed-torque diagram.
- k: characteristic rotor resistance k, see motor data.
- R: required resistance value for selected contactor stage.
- ü: field values, can be varied on the plant by changing the connections on the resistor taps.
- I_R: current through resistor or rotor current.
- Y: counter-torque stage, see 2 usually
- tap, example for contactor stage 2
  Required: 0.3 Ω, Σ selected resistance values contactor stages 4 and 3 = 0.14 Ω.
  ⇒ 0.23 Ω – 0.14 Ω = 0.09 Ω will be required.
  One resistance bank of 0.19 Ω is selected.
  ⇒ 0.09 Ω / 0.19 Ω x 100 % = 47 % of the resistance will be required. Terminal 3 is selected from the associated connection diagram (no. A 081 064) for cast-iron resistor bank 3PR3 801-01-3E.
- Start-up:
  It will be necessary in many cases to improve the drive response on the plant by reconnecting the contactor stages to optimize resistance grading.

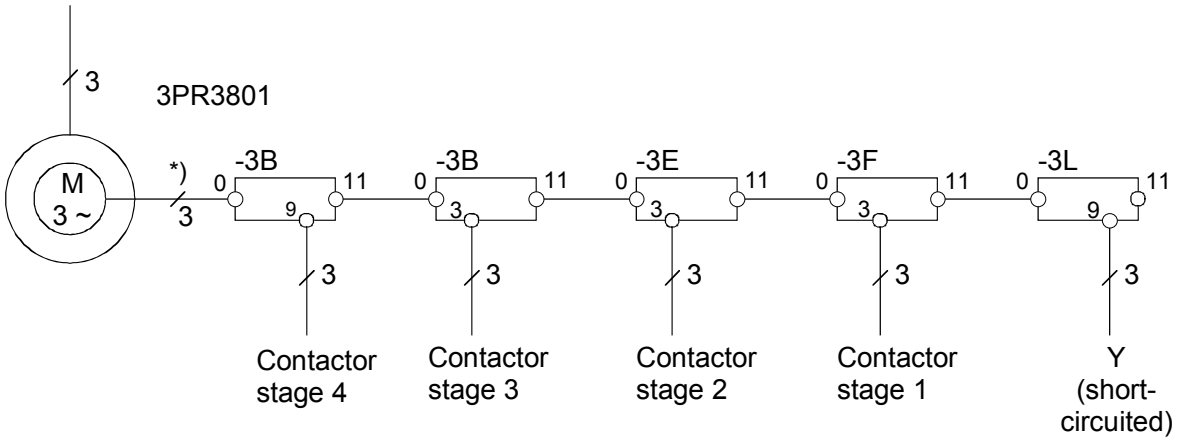

*) Caution: the resistance of the rotor cable may have to be taken into account in contactor stage 4

Figure 3, Connection diagram for rotor resistors

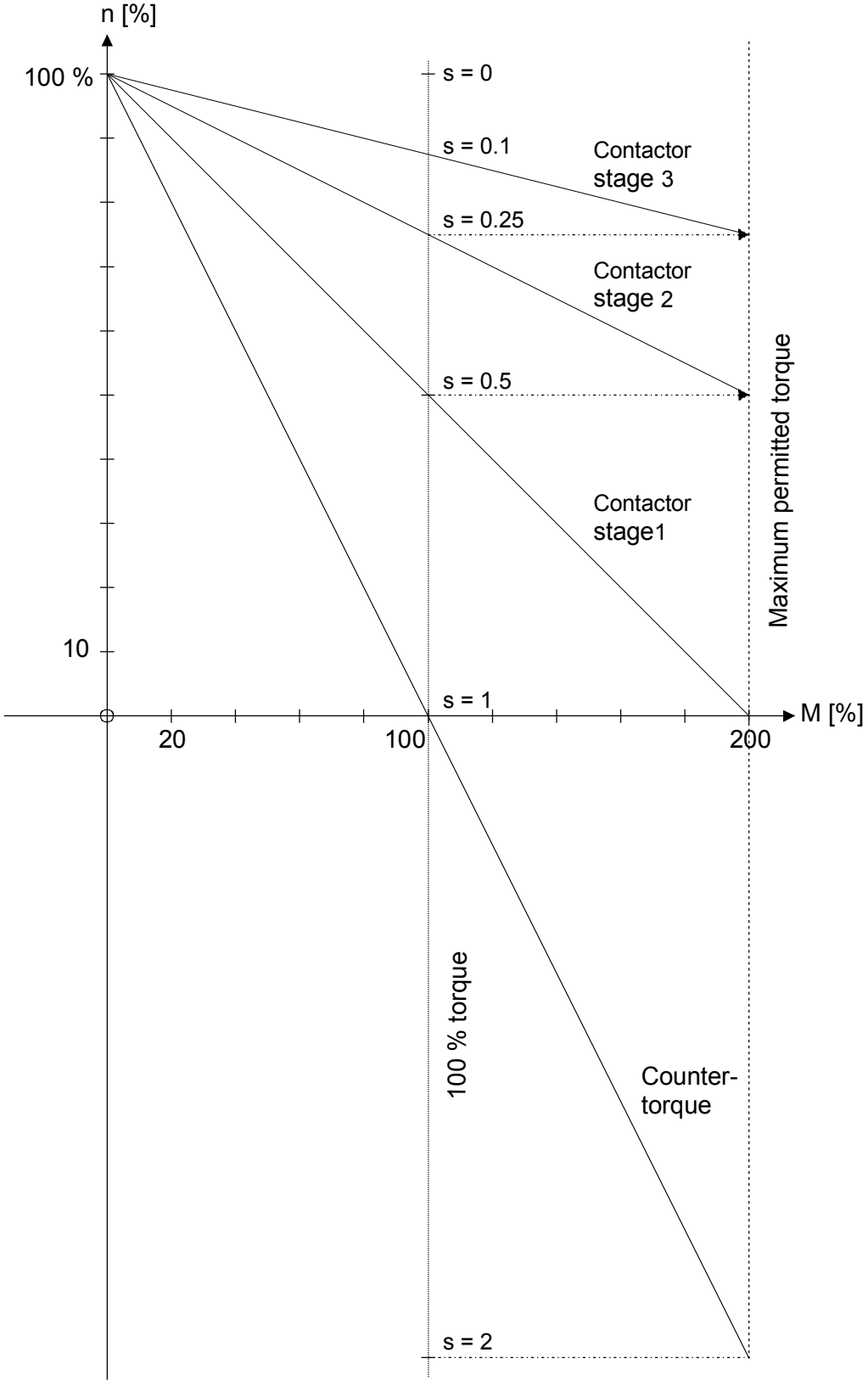

Figure 4, Speed-torque diagram with 3 contactor stages for information purposes.

The notes to Figure 2 apply accordingly.

17.5 Selecting a SIMOTRAS HD converter

A converter with a rated current of 180 A is selected. Order No.: 6SG7065-0EB60-0

Accessories

The SIMOTRAS HD supplementary boards are described in detail in Catalog DA 65.10 • 1998/99.

The converter accessories might be used in the following case:

- PROFIBUS DP interface:
  CBP communications board, order no.: 6SX7010-0FF00 will be required.

Note

The following parts are necessary to install the CBP:

- LBA backplane bus system, order no.: 6SE7090-0XX84-4HA0
- ADB adapter board, order no.: 6SX7010-0KA00.
  The adapter board can hold a maximum of 2 supplementary boards.

17.6 Selecting the contactors

The same rotor contactors and contactor relays are used for all contactor stages.

- Contactor relays, see NS K Low-Voltage Controlgear, Switchgear and Systems catalog:
  The rotor contactors must be controlled via contactor relays. The contactor relays recommended here are suitable for all the stator and rotor contactors suggested in HE 1.
  Recommended contactor relays: 3TH20 22-0...
  Contactor relay with 2 NC and 2 NO contacts.
- Rotor contactors, see HE 1 page 4/42 ff. and the NS K catalog:
  designed for S3-60 % duty, rated contactor current fir this crane application 210 A:
  Recommended rotor contactors: 3TF53 22-0...
  Rotor contactor with 2 NC and 2 NO auxiliary contacts.

  Caution:
  Contactors for delta connection, see Figure 1, for example.

17.7 Selecting a master switch

The master switch should have the following features, see Catalog HE 1, page 471 ff.

- gold contacts
- 6 contacts
- handle
- linear potentiometer

Order No.: 3SJ3 003-0AS05-Z, Z = B3

Note
The connecting cable for the potentiometer must be ordered separately
(order no.: 3SX4 175, or 3SX4 232).

Operation with 4 stage master switch

Two input coupling elements (order no. 3TX7002-2BF02) will be required.

- Suggested connection: see Section 6.1 Block Diagram with suggested connection using 4 stage master switch.
- Function: see Section 8 Function Diagrams (Sheet G125) – Evaluation
- Parameter settings: see Section 7.6.6.2 Operation with 4 stage master switch.

18 Appendix

18.1 Compatibility with SIMOTRAS HE (6GA4625 series)

It is desirable to make the inputs and outputs of the SIMOTRAS HD (6SG70 series) as compatible as possible with its predecessor (the SIMOTRAS HE, 6GA4625 series). The following parameters therefore need to be changed from the factory settings:

Caution: With these parameter settings, the drive-specific (crane) control according to Section 6.4 is not active.

Terminal on SIMOTRAS HE (6GA4625 series)	Settings or measures necessary on SIMOTRAS HD (6SG70 series) to implement the functions of the terminal in the left hand column
Term. 72 (FS ... enable setpoint)	P662.001 = 500 [G180.3] P662.002 = 500 [G180.3]
Term. 73 (FR ... enable controller)	P654.001 = 502 [G130.1] P654.002 = 502 [G130.1] P661.001 = 502 [G180.1] P661.002 = 502 [G180.1] U617 = 0 .. Term. 37 inactive [G130.1] U618 = 0 .. Term. 38 inactive [G180.1]
Term. 74 (FZ ... enable additional setpoint)	U249 = 504 [K13.4] P401.001 .. 4 = 60% .. 100% [K12.5] U628 = 95% [G160.6]
Term. 75 (VE .. pre-limit switch)	U607.001 = 506 [G135.5] U607.002 = 506 [G135.5] U608.001 .. 4 = setpoint reduction factor [G135.5]
Term. 76 (TL .. inch anticlockwise) *)	P430.001 = 508 [G127.2] P431.001 = 402 [G127.2] P402 = inch anticlockwise setpoint [G120.1]
Term. 77 (TR .. inch clockwise) *)	P430.002 = 510 [G127.2] P431.002 = 403 [G127.2] P403 = inch clockwise setpoint [G120.1]
Term. 76 + Term. 77 (reduced start pulse) (i.e. same control as terminals 76 and 77)	U347.001 = 508 [B205.7] U347.002 = 510 [B205.7] U347.003 = 1 [B205.7] U657.001 = 9377 [G150.5] U657.002 = 9377 [G150.5] U652.001 .. 4 = start pulse reduction factor [G150.4] If this function is used, P402 must be = P403
Term. 78 (RS .. reset fault memory)	P665.001 = 512 [G180.1] P665.002 = 512 [G180.1]

*) The “inch” function on SIMOTRAS HE corresponds to the “fixed setpoint“ on SIMOTRAS HD

Term. 81/82 (MB .. ready message)	U621.001 = 162 U621.002 = 162	[G119.3] [G119.3]
Term. 83/84 (ST .. setpoint in controlled range)	U622.001 = 540 U622.002 = 540	[G119.3] [G119.3]
Term. 85/86 (BR .. n ≥ n_min)	U623.001 = 165 U623.002 = 165	[G119.3] [G119.3]
Term. 87/88 (S1 .. rotor contactor stage 1)		[G119.4]
Term. 89/92 (S2 .. rotor contactor stage 2)	For SIMOTRAS HD this is Term. 89/90	[G119.4]
Term. 90/92 (S3 .. rotor contactor stage 3)	For SIMOTRAS HD this is Term. 91/92	[G119.4]
Term. 91/92 (S4 .. rotor contactor stage 4)	For SIMOTRAS HD this is Term. 93/94	[G119.4]
	Terminals 90, 92 and 94 must be linked	
Term. 11/22 (MW .. message “temperature pre-warning”)	For SIMOTRAS HD this is Term. 109/110 U619.001 = 148 U619.002 = 148	[G112.6] [G112.3] [G112.3]

Potentiometer on SIMOTRAS HE (6GA4625 series)	Corresponding parameter on SIMOTRAS HD (6SG70 series)	
TF – Delayed enable	P319 (factory setting = 0.05 s)	[G136.2]
TZ – Brake application time monitoring	This function must be implemented using free modules if required (similar to ramp-down monitoring on Sheet K15 in Section 8)	
NT – Tachometer voltage normalization	P741 (factory setting = 60.00 V)	[G113.2]
NS – Speed setpoint normalization	P320 (factory setting = 100.00 %)	[G135.2]
SH – Lift start pulse	U651 (factory setting = 0.00 %)	[G150.2]
NZ – Additional setpoint normalization	No setting necessary as the “zero delay angle” function is implemented in a different way.	
HR – Clockwise acceleration ramp	P303 (factory setting = 10.00 s) *)	[G136.2]
AR – Clockwise deceleration ramp	P304 (factory setting = 10.00 s) *)	[G136.3]
HL – Anticlockwise acceleration ramp	P303 (factory setting = 10.00 s) *)	[G136.2]
AL – Anticlockwise deceleration ramp	P304 (factory setting = 10.00 s) *)	[G136.3]
VR – n controller gain	P225 (factory setting = 3.00)	[G151.2]
ND – Speed monitoring normalization	P388 (factory setting = 5.00 %)	[G187.5]
ST – Setpoint in controlled range	U628 (factory setting = 55.0 %)	[G160.6]
BR – Standstill monitoring	P370 (factory setting = 5.00 %)	[G188.4]
S1 – Switching logic rotor contactor stage 1	U630 (factory setting = - 1.0 %)	[G119.2]
S2 – Switching logic rotor contactor stage 2	U634 (factory setting = 50.0 %)	[G119.6]
S3 – Switching logic rotor contactor stage 3	U636 (factory setting = 75.0 %)	[G119.6]
S4 – Switching logic rotor contactor stage 4	U638 (factory setting = 90.0 %)	[G119.6]

*) If the ramp-up and ramp-down functions for clockwise and anti-clockwise rotation are to be set separately, the function data set must be switched over.

Microswitch on SIMOTRAS HE (6GA4625 series)	Corresponding parameter on SIMOTRAS HD (6SG70 series)
S1 – Override of ramp-function generator in controlled range	No such setting, as the “zero delay angle” function is implemented in a different way.
S2 – Speed monitoring	Speed monitoring inactive if P590 = P591
S3 – Brake application time monitoring	This function must be implemented using free modules if required (similar to run-back monitoring on Page K15 in Section 8)
S4 – Controlled operation command	The “zero delay angle” command is inactive when U605 = 0.
S5 – Premature switchover of rotor contactor stage 1 to "Delay lowering“ mode (counter-torque operation)	U630 (factory setting = -1.0 %) [G119.2]
S6 – I component of current controller	P154 (factory setting = 1) [G162.6]
S7 – I component of speed controller	P224 (factory setting = 1)
S8 – Selection of type of setpoint input	P700 (factory setting = 0) [G113.2]

Feedback

We have made every effort to produce this manual error-free.
If you discover any errors, we would be grateful if you would inform us.
Please also give us your opinion of this manual and of our device.
Please send your suggestions, praise and criticism to your nearest Siemens regional office.

Many thanks!

Siemens AG Austria, SIMEA

From: Name ..... Date

Company .....

Contact .....

.....

.....

To: Siemens Regional Office

Address .....

.....

Please pass on to
Siemens AG Austria, SIMEA

Concerns: Comments for the 6SG70 Operating Instructions, Edition .....

The following versions have appeared so far:

Version	Internal Part No.
03	C98130-A7002-A1-03-7619
04	C98130-A7002-A1-04-7619
05	C98130-A7002-A1-05-7619
06	C98130-A7002-A1-06-7619
07	C98130-A7002-A1-07-7619

Version **07** consists of the following sections

Section		Pages
0	Contents	4
1	Safety information	4
2	Type spectrum	4
3	Description	16
4	Shipment, unpacking	2
5	Installation	10
6	Connections	40
7	Start-up	56
8	Function diagrams	156
9	Function descriptions	32
10	Faults / Alarms	18
11	Parameter list	162
12	List of connectors and binectors	60
13	Maintenance	10
14	Servicing / Spare parts	4
15	DriveMonitor	2
16	Environmental compatibility	2
17	Configuration example	6
18	Appendix	6

Siemens Industrial Manufacturing,
Engineering and Applications
Postfach 83
1211 WIEN
AUSTRIA
www.siemens.com/automation

© Siemens AG, 1998-2012
Subject to change without notice
Order No.: 6SG7000-0BA76

Printed in EU (Austria)