SIEMENS

SIMATIC NET

SINAUT ST7
Station control system

System Manual

Preface

Properties and technical specifications of the SINAUT components 1

Network structures and topologies 2

Installation guide 3

Installing and putting a TIM into operation 4

Installation and commissioning of the modems and routers 5

Certifications and approvals 6

References A

Volume 1: System and Hardware

08/2011
C79000-G8976-C178-08

Legal information

Warning notice system

This manual contains notices you have to observe in order to ensure your personal safety, as well as to prevent damage to property. The notices referring to your personal safety are highlighted in the manual by a safety alert symbol, notices referring only to property damage have no safety alert symbol. These notices shown below are graded according to the degree of danger.

⚠ DANGER

indicates that death or severe personal injury **will** result if proper precautions are not taken.

⚠ WARNING

indicates that death or severe personal injury **may** result if proper precautions are not taken.

⚠ CAUTION

with a safety alert symbol, indicates that minor personal injury can result if proper precautions are not taken.

CAUTION

without a safety alert symbol, indicates that property damage can result if proper precautions are not taken.

NOTICE

indicates that an unintended result or situation can occur if the relevant information is not taken into account.

If more than one degree of danger is present, the warning notice representing the highest degree of danger will be used. A notice warning of injury to persons with a safety alert symbol may also include a warning relating to property damage.

Qualified Personnel

The product/system described in this documentation may be operated only by **personnel qualified** for the specific task in accordance with the relevant documentation, in particular its warning notices and safety instructions. Qualified personnel are those who, based on their training and experience, are capable of identifying risks and avoiding potential hazards when working with these products/systems.

Proper use of Siemens products

Note the following:

⚠ WARNING

Siemens products may only be used for the applications described in the catalog and in the relevant technical documentation. If products and components from other manufacturers are used, these must be recommended or approved by Siemens. Proper transport, storage, installation, assembly, commissioning, operation and maintenance are required to ensure that the products operate safely and without any problems. The permissible ambient conditions must be complied with. The information in the relevant documentation must be observed.

Trademarks

All names identified by ® are registered trademarks of Siemens AG. The remaining trademarks in this publication may be trademarks whose use by third parties for their own purposes could violate the rights of the owner.

Disclaimer of Liability

We have reviewed the contents of this publication to ensure consistency with the hardware and software described. Since variance cannot be precluded entirely, we cannot guarantee full consistency. However, the information in this publication is reviewed regularly and any necessary corrections are included in subsequent editions.

Siemens AG
Industry Sector
Postfach 48 48
90026 NÜRNBERG
GERMANY

Order number: C79000-G8976-C178
℗ 08/2011

Copyright © Siemens AG
2009...2011.
Technical data subject to change

Preface

About this documentation

What's new in SINAUT ST7?

SINAUT ST7 provides the following new functions:

- New version of "SINAUT ST7 configuration and diagnostics software" V5.2
- Version "SINAUT ST7 configuration and diagnostics software" V5.1
- New SINAUT TD7 library V2.2 SP2 for the CPU

SINAUT ST7 configuration and diagnostics software V5.2

- New functions
  - Sending SMS messages via a connected modem SINAUT MD720-3 or MD741-1

    For this, the two following SINAUT objects are available with the TD7 software TD7onTIM:

    "Sms01_S" for parameter assignment of the SMS

    "SmServiceCenter" for parameter assignment of the SMSC access
  - SINAUT data object "Par12x1D_R" for "TD7onTIM"

    The parameter object can receive a maximum of 12 parameters each with one double word from SINAUT ST7cc/sc.
  - PIN for MSC stations with MD720-3

    Instead of only 4-digit PINs, 4- to 8-digit PINs can now be entered. Leading zeros are also possible. This function applies only for projects created with the configuration and diagnostics software as of V5.2.
- Compatible STEP 7 version

  The configuration software Version V5.2 can be used with STEP 7 as of Version V5.4 Service Pack 4.
- Compatible operating systems

  The configuration software version V5.2 is supported by the following operating systems:
  - Windows Server 2003 SP2 Standard Edition
  - Windows XP Professional SP2 or higher
  - Windows Server 2008, 32-bit Standard Edition
  - Windows Server 2008 R2, 64-bit Standard Edition SP1 (workstation computer)
  - Windows 7, 32-bit / 64-bit:

    Windows 7 Ultimate

    Windows 7 Professional

    Windows 7 Enterprise standard installation (corresponds to Windows 7 Ultimate)

New functions of the SINAUT ST7 configuration and diagnostics software V5.1

With the SINAUT ST7 configuration and diagnostics software V5.1, the following new functions became available.

- Compatible with STEP 7 V5.5
- 2 new TIM modules: TIM 3V-IE DNP3 and TIM4R-IE DNP3

- CPU 400 and CPU 400H can be operated on DNP3-TIMs with TD7onTIM
- "Max. allowed disruption time" parameter in STEP 7 for ST7 Ethernet TIMs

  Configuration in the "Parameter assignment of TIM modules" > "Interfaces" tab > Ethernet interface

  With this parameter, you can enter the tolerance time for connection disruption detected by the TIM. This can be useful in wireless networks that are often disrupted.

  If there is still a disruption on the connection when the set time has elapsed, the disruption is signaled to all connection partners of the disrupted station.

New SINAUT TD7 library V2.2 SP2 for the CPU

New functions of the TD7 library V2.2 SP2:

- Block "Dat256D_S for sending a maximum of 256 double words with any content
- Block "Dat256D_R for receiving a maximum of 256 double words with any content

Replaced documentation

This manual replaces the manual release 07/2009 (C79000-G89xx-C222-07).

For older releases of the manual, see also section Version history (Page 7).

Purpose of this documentation

The SINAUT ST7 system manual is split into two complementary volumes.

- Volume 1: System & Hardware

  This documentation will support you on your way to successful application of SINAUT ST7. This introduces you to the topic in clear and straightforward steps and provides you with an overview of the hardware components of the SINAUT ST7 station control system.

  You will be supported during the planning of network structures and topologies and will see how to install and commission SINAUT components based on the installation guidelines.

- Volume 2: Software

  This documentation provides you with an overview of the software components of the SINAUT ST7 station control system. You will see how individual components are configured. Diagnostics and service options are also explained.

Note

Documentation for the SINAUT ST1 system and older modules

This release of the manual "SINAUT ST7" (volume 1 + 2) no longer has detailed information on the SINAUT ST1 system and the following older modules:

- All previous TIM 3 modules: TIM 3V, TIM 32, TIM 33, TIM 34
- TIM 4V, TIM 4VD, TIM 42, TIM 42D, TIM 43, TIM 43D, TIM 44, TIM 44D

If you require information on these modules or on SINAUT ST1, refer to release 05/2007 of this manual. You will find release 05/2007 on the Internet pages of SIMATIC NET Service & Support at the following address:

(http://support.automation.siemens.com/WW/view/en/22548697)

You can find the documents using the search function of SIMATIC NET Service and Support pages by entering the ID.

- ID for volume 1: 24621696
- ID for volume 2: 24619519

Validity of the documentation

This manual relates to the following software versions:

- SINAUT ST7 configuration and diagnostics software for the PG V5.2
- SINAUT TD7 library for the CPU V2.2 SP2
- SINAUT TIM firmware V4.4.0 for the TIM 4
- SINAUT TIM firmware V2.3 for the TIM 3V-IE variants
- SINAUT TIM firmware V2.3 for the TIM 4R-IE

Further information on the Internet

You will find further information on the SINAUT products on the Internet at the following address:

(http://support.automation.siemens.com/WW/view/en/22548697)

There select the required information under "Entry type" (for example "Updates", "Manuals", "FAQs" etc.).

Training, Service & Support

You will find information on Training, Service & Support in the multilanguage document "Training, Service & Support" on the "SIMATIC NET Manual Collection" DVD that ships with the products.

Version history

Release 07/2009 of the manual (C79000-G89xx-C222-07)

New functions:

- New version "SINAUT ST7 configuration software for the PG/PC" V5.0
  - The Ethernet TIMs can be configured for communication via the MSC protocol. This allows the use of the GPRS/GSM modem SINAUT MD720-3 even in SINAUT in Internet/GPRS networks. An encrypted connection can be established from an Ethernet TIM to the Internet via a DSL modem.
  - The time slot method can now also be configured with the "SINAUT ST7 configuration software for the PG/PC" as of V5.0 for a master TIM without DCF7 receiver, if a TIM 4R-IE with an Ethernet connection to an ST7cc/ST7sc PC is used as the master TIM.

  The configuration software Version V5.0 can be used with STEP 7 as of Version V5.4 Service Pack 4.

  The configuration software version V5.0 is supported by the following operating systems:
  - Windows XP Professional SP2
  - Windows Server 2003 SP2
  - Windows Vista 32 Bit Ultimate and Business (with or without SP1)
- New firmware version V2.0 for all Ethernet TIM modules

  The new firmware supports the MSC protocol.

Validity of the manual:

- SINAUT ST7 configuration software for the PG/PC V5.0
- SINAUT TD7 library for the CPU V2.2
- SINAUT TIM firmware V4.3.9 for the TIM 4
- SINAUT TIM firmware V2.0 for the TIM 3V-IE variants
- SINAUT TIM firmware V2.0 for the TIM 4R-IE

Release 05/2007 of the manual (C79000-G89xx-C222-06)

New functions:

- New product "TIM 4R-IE" for connecting SINAUT via WAN and Ethernet
- New product version "SINAUT ST7 configuration software for the PG/PC" V4.1

Validity of the manual:

- SINAUT ST7 configuration software for the PG/PC V4.1
- SINAUT TD7 library for the CPU V2.2
- SINAUT TIM firmware V4.3.7 for the TIM 3 / TIM 4

- SINAUT TIM firmware V1.2 for the TIM 3V-IE variants
- SINAUT TIM firmware V1.0 for the TIM 4R-IE

Release 10/2006 of the manual (C79000-G89xx-C222-05)

New functions:

- New product versions
  - SINAUT ST7 configuration software for the PG/PC V4.0
  - SINAUT TD7 library for the CPU V2.2 with new blocks for communication via P-bus
- New hardware for GSM and GPRS
  - GPRS modem MD740-1 for secure packet-oriented communication via GSM mobile wireless (GPRS)
  - GSM modem MD720-3 as replacement for the discontinued GSM modem MC45 for establishing dial-up connections via the GSM mobile wireless network; possible as of firmware V1.7.3 of the MD720-3

Validity of the manual:

- SINAUT ST7 configuration software for the PG/PC V4.0
- SINAUT TD7 library for the CPU V2.2
- SINAUT TIM firmware V4.3.7 for the TIM 3 / TIM 4
- SINAUT TIM firmware V1.2 for the TIM 3V-IE variants

Table of contents

Preface **3**

1 Properties and technical specifications of the SINAUT components **13**

1.1 Area of application 13

1.2 Components in a SINAUT ST7 system 14

1.3 SINAUT TIM communication modules 15
1.3.1 Overview of All TIM Variants 16
1.3.2 The TIM 3V-IE variants 17
1.3.3 Design of the TIM 3V-IE variants 19
1.3.4 Technical specifications of the TIM 3V-IE variants 20
1.3.5 The TIM 4R-IE 25
1.3.6 Design of the TIM 4R-IE 27
1.3.7 Technical specifications of the TIM 4R-IE 28
1.3.8 The TIM 4 variants 31
1.3.9 Design of the TIM 4 variants 33
1.3.10 Technical specifications of the TIM 4 variants 34

1.4 The classic SINAUT ST7 modems 36
1.4.1 The modem variants 37
1.4.2 Overview of all modem variants and accessories 38
1.4.3 Technical specifications of the SINAUT ST7 modems 39

1.5 Mobile wireless components 44
1.5.1 Area of application for GSM 44
1.5.2 GSM modem MD720-3 44
1.5.3 EGPRS/GPRS router MD741-1 46
1.5.4 ANT794-4MR GSM/GPRS antenna 48
1.5.5 Technical specifications of the SINAUT mobile wireless components 49

1.6 LTOP overvoltage protection modules 53
1.6.1 Variants and overview of the LTOP overvoltage protection modules 53
1.6.2 Technical specifications of the LTOP overvoltage protection module 54

1.7 Radio clock components 55
1.7.1 Accessories for DCF77 55
1.7.2 GPS receiver 57
1.7.3 Overview of the radio clock components 59
1.7.4 Technical specifications of the radio clock components 60

1.8 Connecting cables 63
1.8.1 Cable for connecting TIM and modem modules 63
1.8.2 WAN connecting cables 64
1.8.3 TIM 4R / 4RD interface adapter cable 65

1.9 The SINAUT ST7 standard software package 65
1.9.1 SINAUT TD7 Library, blocks for the CPU 65
1.9.2 SINAUT ST7 configuration software for the PG 67
1.9.3 Overview for ordering SINAUT ST7 software 73

1.9.4 Installation of the SINAUT ST7 standard software package ... 73
1.9.5 Uninstalling SINAUT ST7 software packages ... 74

1.10 SINAUT ST7cc, the add-on for WinCC ... 75
1.10.1 Area of application ... 75
1.10.2 The special properties of SINAUT ST7cc ... 76
1.10.3 System prerequisites ... 77
1.10.4 Ordering data for SINAUT ST7cc ... 79
1.10.5 Technical specifications of SINAUT ST7cc ... 80

1.11 SINAUT ST7sc SCADA Connect software ... 80
1.11.1 The special properties of SINAUT ST7sc ... 81
1.11.2 System prerequisites ... 83
1.11.3 Ordering data for SINAUT ST7sc ... 85
1.11.4 Technical specifications of SINAUT ST7sc ... 86

2 Network structures and topologies ... 87

2.1 Overview of the possible network types ... 87

2.2 Configurations ... 88
2.2.1 Configurations with IP-based WAN ... 88
2.2.2 Configurations with classic WAN ... 93

3 Installation guide ... 97

3.1 Horizontal and vertical installation ... 97

3.2 Dimensions for installation of the SINAUT ST7 components ... 98

3.3 Current consumption and power loss of the SINAUT ST7 components ... 98

3.4 Installing the TIM 3V-IE variants in an S7-300 ... 101

3.5 Installing the TIM 4R-IE in an S7-300 ... 108

3.6 Standalone TIM 4R-IE with an S7-400 or PC ... 116

3.7 Installation of the TIM 4 as CP in an S7-300 ... 119

3.8 Standalone TIM 4 with an S7-400 or PC ... 123

4 Installing and putting a TIM into operation ... 131

4.1 Design of the TIM 3V-IE variants ... 132
4.1.1 Front view of the TIM 3V-IE variants with closed front panel ... 132
4.1.2 Front view of the TIM 3V-IE variants with front panel removed ... 133
4.1.3 LEDs of the TIM 3V-IE variants ... 133
4.1.4 Pinout of the ports ... 135
4.1.5 Standard connecting cables for the TIM 3V-IE variants ... 136

4.2 Design of the TIM 4R-IE ... 140
4.2.1 Front view of the TIM 4R-IE with closed front panel ... 140
4.2.2 Front view of the TIM 4R-IE with removed front panel ... 141
4.2.3 LEDs of the TIM 4R-IE ... 142
4.2.4 Pinout of the ports ... 144
4.2.5 Standard connecting cables for the TIM 4R-IE ... 145

4.3 Design of the TIM 3 and TIM 4 modules ... 149
4.3.1 Front view of the TIM 4 with closed front panels ... 149
4.3.2 Front view of the TIM 4 with removed front panels ... 150

4.3.3 LEDs of the TIM 3 / TIM 4 151
4.3.4 Pinout of the X1 and X2 connectors 151
4.3.5 Standard connecting cables that can be connected to connector X1 153
4.3.6 View of the TIM 4 from above 156
4.3.7 View of the TIM 3 / TIM 4 from below 157

4.4 Options for connecting up and settings for the TIM 4R or TIM 4RD 159
4.4.1 Possible attachments and settings for the TIM 4R and TIM 4RD 160

4.5 Installing a TIM 163
4.5.1 Introduction 163
4.5.2 Important notes on using the device 164
4.5.3 Installing a TIM module as CP 166
4.5.4 Installing a TIM 4 / TIM 4R-IE as a standalone device 167
4.5.5 Horizontal and vertical installation 168
4.5.6 Connecting the TIM to the power supply 169

4.6 Configuring a TIM and setting parameters 172

4.7 Startup activities of the TIM module 177
4.7.1 Startup of the TIM 3V-IE variants 177
4.7.2 Startup activities of the TIM 4R-IE 179
4.7.3 Startup behavior of the TIM 4 182

5 Installation and commissioning of the modems and routers 185

5.1 Overview 185

5.2 Important notes on using the device 185

5.3 GSM/GPRS modem MD720-3 187
5.3.1 Displays and connectors 188
5.3.2 Connecting the MD720-3 to the TIM and antenna 191
5.3.3 Prerequisites for operation 191
5.3.4 Further documentation 192

5.4 GPRS/GSM router MD741-1 192
5.4.1 Displays and connectors 193
5.4.2 Connecting the MD741-1 to the TIM and antenna 196
5.4.3 Prerequisites for operation 196
5.4.4 Further documentation 197

5.5 MD2 dedicated line modem 198
5.5.1 Displays and connectors accessible from the front 198
5.5.2 Configuration switches accessible from above 205
5.5.3 Connectors and configuration switches accessible from below 211
5.5.4 Connecting the MD2 with TIM, LTOP and dedicated line 215

5.6 LTOP line transformer with overvoltage protection 227
5.6.1 Structure 227
5.6.2 Connecting up the MD2 modem 230

5.7 Analog dial-up modem MD3 235
5.7.1 Indicators and connectors accessible from the front 235
5.7.2 Configuration switches accessible from above 242
5.7.3 Connectors and configuration switches accessible from below 252
5.7.4 Connecting the MD3 with a TIM and TAE6 outlet 256
5.7.5 Connecting the MD3 with TIM, LTOP and dedicated line 257

5.7.6 User-configurable profiles 263
5.7.7 LTOP line transformer with overvoltage protection 266

5.8 ISDN dial-up modem MD4 268
5.8.1 Indicators and connectors accessible from the front 268
5.8.2 Configuration switches accessible from above 273
5.8.3 Connectors and configuration switches accessible from below 277
5.8.4 Connecting the MD4 with a TIM and ISDN outlet 279

5.9 Installing and putting a SINAUT MD2, MD3, MD4 modem into operation 280
5.9.1 Installation 280
5.9.2 Installation on an S7-300 rail 280
5.9.3 Installation on a 35 mm standard rail 282
5.9.4 Horizontal and vertical installation 282
5.9.5 Connecting to the power supply 283

6 Certifications and approvals 285

6.1 Approvals for the TIM 4R/4RD and the SINAUT modems 285

6.2 Additional approvals for SINAUT products for the analog telephone network 288

6.3 Approvals for the TIM 3V-IE variants and the TIM 4R-IE 291

A References 297

Glossary 299

Index 315

Properties and technical specifications of the SINAUT components

1

1.1 Area of application

Process control over WAN and Ethernet

SINAUT® ST7 is a system based on SIMATIC® S7 for fully automatic monitoring and control of process stations that exchange data with another and with one or more control centers over a WAN (wide area network) or Ethernet (TCP/IP).

The control center

The following can currently be used as control centers:

- SIMATIC controllers S7-300 or S7-400. This solution is suitable for less complex control centers, in which only a current image of the process data in the stations is required. By entering commands, setpoints or parameters, it is possible to intervene in the process control of the stations.
- SINAUT ST7cc, the PC control center (single or redundant) based on WinCC. This is a control center system for SINAUT ST7 specially tailored to the event-driven and time-stamped data transmission of the SINAUT system.
- SINAUT ST7sc, the link to control centers of other vendors over OPC. Using the "Data Access Interface", the SINAUT telecontrol technology can also interface with the control center systems of other vendors. ST7sc has extensive buffer mechanisms that prevent data loss, for example, if the OPC client fails.

The SINAUT WAN networks

The following WANs can be used for data transmission:

- Dedicated lines (copper or fiber-optic cables)
- Private wireless networks (optionally with time slots)
- Analog telephone network
- Digital ISDN network
- Mobile wireless networks (GSM)

All networks can be combined as necessary. Redundant paths are also possible. Star, bus (linear) and node structures can be implemented.

SINAUT over Ethernet

SINAUT communication is possible between station and control center and between stations over Ethernet or IP-based networks. This includes transmission using the GPRS service in mobile wireless networks (GSM networks). The prerequisite is continually available connections.

Change-driven data transmission

The SINAUT software in the stations allows change-driven process data exchange with the control center and between the individual CPUs.

Local data storage

One special characteristic of the TIM communications module used in the SINAUT ST7 system is the local storage of data messages (including time stamp) if there is a problem on the communication link, if a partner fails or to optimize costs on dial-up networks.

Date and time always precise

The CPUs and even the control center (for example ST7cc) can be supplied throughout the network with the date and time using a DCF77 radio clock. The systems therefore always have a precise time of day including standard/daylight-saving time adjustment. Instead of DCF77, GPS (Global Positioning System) can also be used as the time source.

SINAUT remote programming

All the diagnostic and programming functions provided by SIMATIC and SINAUT for station automation and SINAUT communication can be used beyond the SINAUT networks while process data transmission is active.

Alerting over SMS

The CPUs can transmit event-driven SMS messages to GSM mobile phones to alert standby personnel. This is supported by both variants of the TD7 software (TD7onCPU and TD7onTIM) although the range of functions is slightly different. This is described in detail in the SINAUT ST7 system manual, volume 2 "Software".

1.2 Components in a SINAUT ST7 system

The SINAUT ST7 system is based on the S7-300 and S7 400 SIMATIC systems and on WinCC. It expands these systems by adding the special SINAUT hardware and software components listed below.

Hardware components

The range of hardware components includes:

- TIM communications modules
- MD modem modules

  Classic modems for dedicated line, analog and ISDN dial-up networks
- Mobile wireless components

  e.g. GSM modem MD720-3, GPRS router MD741-1
- LTOP overvoltage protection modules
- Radio clock components
- Connecting cables

Software components

The range of software components includes:

- Standard software for SINAUT ST7 consisting of the individual packages
  - SINAUT TD7 library (TD7onCPU). This contains blocks for the S7-CPU.
  - SINAUT TD7 library (TD7onTIM). Blocks on the TIM (no memory required on the CPU)
  - SINAUT ST7 configuration and diagnostic software for the programming device
- SINAUT ST7cc, the expansion package for WinCC consisting of
  - ST 7 Server, the interface between ST7 and WinCC
  - ST7cc Config, the configuration tool for ST7cc
- SINAUT ST7sc, the SCADA Connect software, consisting of
  - OPC server, the interface between ST7 and an OPC client
  - ST7sc Config, the configuration tool for ST7sc

Note

The standard software for SINAUT ST7 is described in detail in Volume 2 of this system manual.

The SINAUT ST7cc and SINAUT ST7sc software packages are described in separate manuals.

1.3 SINAUT TIM communication modules

The central component of the SINAUT hardware is the TIM communications module (Telecontrol Interface Module). This handles the data traffic for the S7-CPU or for the control center PC with the aid of the SINAUT ST7 protocol via the relevant SINAUT network.

The TIM is housed in an S7-300 enclosure and is available in three basic versions:

TIM 3V-IE

The TIM 3V-IE is a SINAUT communications module for the SIMATIC S7-300. It has an RS-232 interface to which a suitable modem can be connected. It also has an RJ-45 interface that allows SINAUT communication over IP-based networks (LAN or WAN).

The TIM 3V-IE is available in standard and advanced versions. With the advanced versions, the two interfaces can be used at the same time for SINAUT communication. The two transmission paths can be completely independent of each other or form a redundant transmission path.

TIM 4R-IE

The TIM 4R-IE is suitable for installation in a SIMATIC S7-300 as a communications module and can also be connected over Ethernet to one or more SIMATIC S7-400s and to ST7cc or ST7sc PC control centers as a standalone device.

It has two combined RS-232/RS-485 interfaces to which a classic WAN (dedicated line or dial-up network) can be connected via a suitable modem. It also has two RJ-45 interfaces that allow SINAUT communication over Ethernet-based networks (LAN or WAN).

All four interfaces can be used at the same time for SINAUT communication. The four transmission paths can all be different and operated independently. The two pairs of interfaces can also form a redundant transmission path.

TIM 4

The TIM 4 is suitable for installation in the SIMATIC S7-300 as a communications module and can also be connected via their MPI ports to one or more SIMATIC S7-300/-400s and to ST7cc or ST7sc PC control centers as a standalone device.

It has two WAN connectors in the form of RS-232/RS-485 ports to which a suitable external modem can be connected.

The two WANs that can be connected to a TIM 4 may be of the same type or different, for example dedicated line plus telephone network. The two transmission paths can be either completely independent of each other or form a redundant transmission path.

The TIM 4RD is equipped with a DCF77 radio clock receiver.

1.3.1 Overview of All TIM Variants

All TIMs are supplied with a bus module connector allowing the TIM to be installed in an S7-300 as a CP. The adapter cable for the second RS-232/RS-485 port ships with the TIM 4R variant. The DCF77 adapter cable ships with the TIM 4RD with DCF77 radio clock receiver.

The following table provides an overview of all TIM variants and their order numbers.

Table 1- 1 Overview of All TIM Variants

	Can be used in conjunction with		MPI port	Ethernet port	RS-232/ RS-485 for external modem	Integrated modem	DCF77 radio clock[2)]	Order no.
	S7-300	S7-400						
TIM 3V-IE	•	no	no	1	1 (RS-232)	no	no	6NH7 800-3BA00
TIM 3V-IE Advanced	•	• [1)]	no	1	1 (RS-232)	no	no	6NH7 800-3CA00
TIM 4R[3)]	•	•	•	no	2	no	no	6NH7 800-4AA90
TIM 4RD [3)]	•	•	•	no	2	no	•	6NH7 800-4AD90
TIM 4R-IE	•	•	no	2	2	no	no	6NH7 800-4BA00

1) The TIM can be connected either via the MPI interface of its S7-300-CPU or via its own Ethernet interface to an S7-400 or to the ST7cc or ST7sc PC.

2) Including DCF77 adapter cable 6NH7700-0AD15

3) Including adapter cable 6NH7700-0AS05 for the second serial RS-232/RS-485 port

1.3.2 The TIM 3V-IE variants

The TIM 3V-IE is available in standard and advanced versions. The two communications processors share the following properties:

- TIM without integrated modem, single width
- For installation as a communications processor (CP) in an S7-300
- With a TIM 3V-IE, an S7-300 CPU or a C7 control system can then handle SINAUT communication:
  - Via a classic SINAUT WAN network with SINAUT partners
  - Over an IP-based network (WAN or LAN) with SINAUT ST7 subscribers
- It has two interfaces:
  - RS-232 interface for connection of required WAN transmission equipment (classic SINAUT WAN)

    To allow use of GPRS, the switchable serial interface of a station TIM 3V-IE can be connected to a GSM network via the GSM modem MD720-3. This requires the MSC protocol to be enabled in the STEP 7 > Properties dialog of the TIM > Interfaces tab. The WAN interface then behaves like an Ethernet interface.
  - RJ-45 interface for attachment to Ethernet
- The SINAUT TD7 software is integrated on the TIM (TD7onTIM)
- Modules can be replaced without the need for a programming device

The following properties are different on the TIMs:

	TIM 3V-IE	TIM 3V-IE Advanced
SINAUT communication over	RS-232 *or* RJ-45	RS-232 *and* RJ-45, also as redundant transmission path
Use as	• Station	• Station • Nodes • Master station
Data memory	16,000 data messages	32,000 data messages
Number of S7 connections	8	20
Can be combined with other TIMs in the rack	no	yes
Communication over MPI of the S7-300 CPU	no	yes

The following figure shows a TIM 3V-IE.



Figure 1-1 SINAUT TIM 3V-IE communications module

1.3.3 Design of the TIM 3V-IE variants

The TIM 3V-IE variants have all the advantages of the SIMATIC S7-300 system design:

- Compact design; single standard width of the SM modules of the SIMATIC S7-300
- 9-pin D-sub male connector with an RS-232 interface for connecting a modem
- RJ-45 jack for connection to Ethernet; industrial design with additional collar for inserting the IE FC RJ-45 Plug 180
- 2-pin plug-in terminal block for connecting the external supply voltage of 24 V DC
- Front LEDs for display of Ethernet and WAN communication
- Easy to mount; the TIM is mounted on the S7-300 rail and connected to adjacent modules by means of the bus module connectors. No slot rules apply.
- Can be operated in an expansion rack (ER) in conjunction with the IM 360/361. This allows the TIM to be combined with a C7 control system, with the newer C7 control systems it can also be combined using the supplied I/O expansion cable.
- Can be operated without a fan
- A backup battery or memory module are not required

The following figure shows the ports of the TIM 3V-IE or TIM 3V-IE Advanced (schematic representation with covers removed).

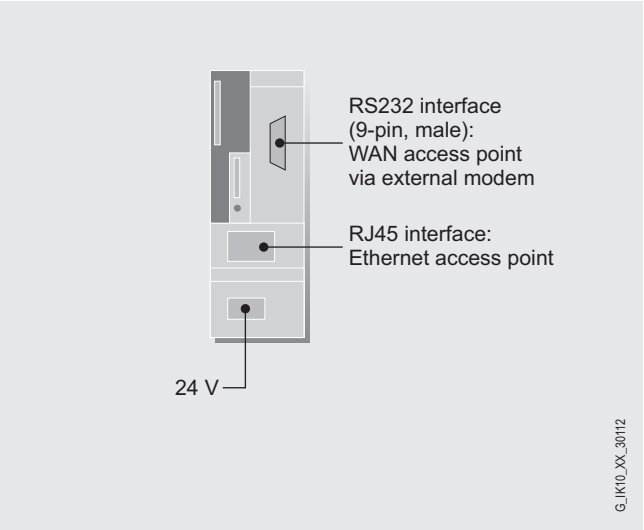

Figure 1-2 Ports of the TIM 3V-IE or TIM 3V-IE Advanced

1.3.4 Technical specifications of the TIM 3V-IE variants

Technical specifications of the TIM 3V-IE

TIM 3V-IE	
General	
Transmission speed	
• RS-232	• 300 to 38,400 bps
• Ethernet	• 10/100 Mbps autosensing
Interfaces	
• Communication port, electrical	• Interfaces: – 1 x RS-232, 9-pin D-sub male connector – 1 x RJ-45 (10/100 Mbps; TP)
• Connection to power supply	• 2-pin plug-in terminal strip
Cable length	
• RS-232	• max. 6 m
• RS-485	• max. 30 m
• RJ-45	• max. 10 m
Power supply	24 V DC; min. 20.4 V; max. 28.8 V
Current consumption	
• From backplane bus	• 200 mA
• From 24 V DC	• typically 160 mA, max. 200 mA
Power loss	5.8 W
Permitted ambient conditions	
• Operating temperature	• 0 °C to +60 °C
• Transport/storage temperature	• -40 °C to +70 °C
• Relative humidity	• Max. 95 % at +25 °C
Construction	
• Module format	• Compact module for S7-300, single width
• Dimensions (W x H x D) in mm	• 40 x 125 x 120
• Weight	• 250 g
Degree of protection	IP 20
Configuration	
• Software for PG	• SINAUT ST7 configuration software for PG
• TD7 software for CPU (optional)	• SINAUT TD7 block library for CPU
• Storage of TIM configuration data	• Storage: – on internal TIM flash memory – on MMC of the S7-300-CPU

TIM 3V-IE	
TIM can be operated in the role	
• Station	• yes
• Node station	• no
• Master station	• no
No. of TIM 3V-IE modules per S7-300	1
Local communication	
• Over backplane bus with the S7-300-CPU	• Possible over TD7onCPU and TD7onTIM
• Over backplane bus with other TIMs in the rack	• Not possible
• Over MPI port of the S7-300-CPU [1] with other CPUs, TIMs, and/or PCs	• Not possible
Work memory required on the S7 CPU	
• SINAUT TD7 on CPU (TD7onCPU)	• At least 20 KB; actual requirements depend on the amounts of data and range of functions
• SINAUT TD7 on TIM (TD7onTIM)	• Best case, 0 bytes
Message memory on TIM	
• Number of messages	• 16,000 messages
• Buffered	• no
Transmission protocols (RS-232)	
Selectable protocols	• SINAUT ST7 • SINAUT ST1
Mode with dedicated line/wireless network	
• SINAUT ST7 protocol	• Modes: – Polling – Polling with time slots – Multi-master polling with time slots
• SINAUT ST1 protocol	• Modes: – Polling – Polling with time slots
Mode in dial-up network	
• SINAUT ST7 protocol	• Spontaneous
• GPRS/MSC tunnel on the basis of the SINAUT ST7 protocol	• Spontaneous
• SINAUT ST1 protocol	• Spontaneous

TIM 3V-IE	
Asynchronous character format	
• SINAUT ST7 protocol, polling or spontaneous	• 10 or 11 bits
• SINAUT ST7 protocol, multi-master polling	• 10 bits
• SINAUT ST1 protocol, polling	• 11 bits
• SINAUT ST1 protocol, spontaneous	• 10 or 11 bits
Hamming distance d	
• SINAUT ST7 protocol	• 4
• SINAUT ST1 protocol	• 4
Ethernet	
Protocol	TCP/IP transport protocol
Communication services	• SINAUT ST7 using S7 communication • SINAUT ST7 via MSC tunnel • PG communication
Number of connections	
• S7 communication	• max. 8
• MSC connections	• max. 1 (only as MSC station)
Total number of simultaneously operable productive connections (S7 + MSC)	max. 9
Also:	
• PG communication	• max. 2

[1] The MPI ports of the S7-300-CPU can be used with the following CPU types:
All variants of the CPU 312, CPU 312C, CPU 314 and CPU 314C;
the CPU 315-2 DP and the CPU 315F-2 DP

Technical specifications of the TIM 3V-IE Advanced

TIM 3V-IE Advanced	
General	
Transmission speed	
• RS-232	• 300 to 38,400 bps
• Ethernet	• 10/100 Mbps autosensing
Interfaces	
• Communication port, electrical	• Interfaces: – 1 x RS-232, 9-pin D-sub male connector – 1 x RJ-45 (10/100 Mbps; TP)
• Connection to power supply	• 2-pin plug-in terminal strip

TIM 3V-IE Advanced	
Cable length	
• RS-232	• max. 6 m
• RS-485	• max. 30 m
• RJ-45	• max. 10 m
Power supply	24 V DC; min. 20.4 V; max. 28.8 V
Current consumption	
• From backplane bus	• 200 mA
• From 24 V DC	• typically 160 mA, max. 200 mA
Power loss	5.8 W
Permitted ambient conditions	
• Operating temperature	• 0 °C to +60 °C
• Transport/storage temperature	• -40 °C to +70 °C
• Relative humidity	• Max. 95 % at +25 °C
Construction	
• Module format	• Compact module for S7-300, single width
• Dimensions (W x H x D) in mm	• 40 x 125 x 120
• Weight	• 250 g
Degree of protection	IP 20
Configuration	
• Software for PG	• SINAUT ST7 configuration software for PG
• TD7 software for CPU (optional)	• SINAUT TD7 block library for CPU
• Storage of TIM configuration data	• Storage: – on internal TIM flash memory – on MMC of the S7-300-CPU
TIM can be operated in the role	
• Station	• yes
• Node station	• yes
• Master station	• yes
No. of TIM 3V-IE Advanced modules per S7-300	several: Number depends on the communication resources of the S7-300 CPU
Local communication	
• Over backplane bus with the S7-300-CPU	• Possible over TD7onCPU and TD7onTIM
• Over backplane bus with other TIMs in the rack	• Possible
• Over MPI port of the S7-300-CPU [1)] with other CPUs, TIMs, and/or PCs	• Possible over TD7onCPU (for S7-300 and S7-400) and S7 communication (for ST7cc/ST7sc and TIMs)
• Over Ethernet interface with CPUs, PCs and other TIMs	• Possible over TD7onCPU (for S7-400) and S7 communication (for ST7cc/ST7sc and TIMs)

TIM 3V-IE Advanced	
Work memory required on the S7 CPU	
• SINAUT TD7 on CPU (TD7onCPU)	• At least 20 KB; actual requirements depend on the amounts of data and range of functions
• SINAUT TD7 on TIM (TD7onTIM)	• Best case, 0 bytes
Message memory on TIM	
• Number of messages	• 32,000 messages
• Buffered	• no
Transmission protocols (RS-232)	
Selectable protocols	• SINAUT ST7 • SINAUT ST1
Mode with dedicated line/wireless network	
• SINAUT ST7 protocol	• Modes: – Polling – Polling with time slots – Multi-master polling with time slots
• SINAUT ST1 protocol	• Modes: – Polling – Polling with time slots
Mode in dial-up network	
• SINAUT ST7 protocol	• Spontaneous
• GPRS/MSC tunnel on the basis of the SINAUT ST7 protocol	• Spontaneous
• SINAUT ST1 protocol	• Spontaneous
Asynchronous character format	
• SINAUT ST7 protocol, polling or spontaneous	• 10 or 11 bits
• SINAUT ST7 protocol, multi-master polling	• 10 bits
• SINAUT ST1 protocol, polling	• 11 bits
• SINAUT ST1 protocol, spontaneous	• 10 or 11 bits
Hamming distance d	
• SINAUT ST7 protocol	• 4
• SINAUT ST1 protocol	• 4
Ethernet	
Protocol	TCP/IP transport protocol

TIM 3V-IE Advanced	
Communication services	• SINAUT ST7 using S7 communication • SINAUT ST7 via MSC tunnel • PG communication
Number of connections	
• S7 communication	• max. 24
• MSC connections	• max. 1 (only as MSC station)
Total number of simultaneously operable productive connections (S7 + MSC)	max. 25
Also:	
• PG communication	• max. 4

[1] The MPI ports of the S7-300-CPU can be used with the following CPU types:
All variants of the CPU 312, CPU 312C, CPU 314 and CPU 314C;
the CPU 315-2 DP and the CPU 315F-2 DP

1.3.5 The TIM 4R-IE

- TIM without integrated modem, double width
- Has four interfaces:
  - 2 x combined RS-232/RS-485 interface for connection of required WAN transmission equipment (classic SINAUT WAN)

    To allow use of GPRS, the switchable serial interface WAN 1 of the TIM 4R-IE can be connected to a GSM network via the GSM modem MD720-3. This requires the MSC protocol to be enabled in the STEP 7 > Properties dialog of the TIM > Interfaces tab. The WAN interface then behaves like an Ethernet interface.
  - 2 x RJ-45 interface for attachment to Ethernet
- Compact unit that can be used in a wide variety of situations:
  - as a communications processor (CP) in an S7-300
  - as a standalone device combined with one or more S7-400s or control center PCs (SINAUT ST7cc or ST7sc) over the Ethernet interface
- This allows these devices to handle SINAUT communication:
  - Over any two classic SINAUT WAN networks with SINAUT partners
  - Over two IP-based networks (WAN or LAN) with SINAUT ST7 subscribers
- All four interfaces can be used at the same time for SINAUT communication.
- The four transmission paths can all be different and operated independently. The two pairs of interfaces can also form a redundant transmission path.

- When installed as a CP in an S7-300, the following communication is also possible:
  - With the CPU
  - Over the MPI interface of this CPU with other CPUs and control center PCs (ST7cc, ST7sc) connected over the MPI bus
  - With other TIMs in this rack
- Message memory for up to 56,000 data messages
- Optional backup battery for backup of the stored data messages and the hardware clock
- Up to 62 S7 connections
- The SINAUT TD7 software is integrated on the TIM (TD7onTIM). It can be used when the TIM is installed as a CP in an S7-300.
- Modules can be replaced without a PG:
  - In standalone mode using the optional C-PLUG
  - When installed as a CP in an S7-300 over the MMC of the CPU



Figure 1-3 The SINAUT communications module TIM 4R-IE

1.3.6 Design of the TIM 4R-IE

The TIM 4R-IE variants have all the advantages of the SIMATIC S7-300 system design:

- Compact design; double standard width of the SM modules of the SIMATIC S7-300
- 9-pin D-sub male connector with a combined RS-232/RS-485 interface for connecting a modem
- Two RJ-45 jacks for connection to Ethernet; industrial design with additional collar for inserting the IE FC RJ-45 Plug 180
- 2-pin plug-in terminal block for connecting the external supply voltage of 24 V DC
- Front LEDs for display of Ethernet and WAN communication
- Simple mounting; the TIM is installed on an S7-300 rail. If the TIM is installed in an S7-300 as a CP, it is connected to adjacent modules by means of the bus module connectors. No slot rules apply.
- Can be operated in an expansion rack (ER) in conjunction with the IM 360/361. This allows the TIM to be combined with a C7 control system, with the newer C7 control systems it can also be combined using the supplied I/O expansion cable.
- Can be operated without a fan
- A backup battery and a memory module (C-PLUG) can be installed as options.

The following figure shows the ports of the TIM 4R-IE (schematic representation with front panel removed).

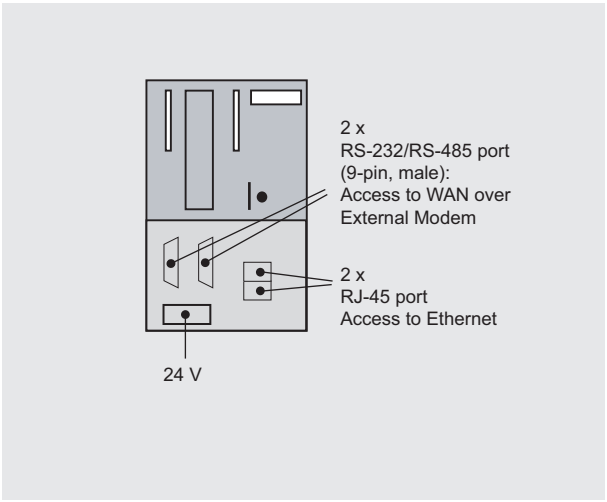

Figure 1-4 Ports of the TIM 4R-IE

1.3.7 Technical specifications of the TIM 4R-IE

Technical specifications of the TIM 4R-IE

TIM 4R-IE	
General	
Transmission speed	
• RS-232/RS-485	• 300 to 115200 bps
• Ethernet	• 10/100 Mbps autosensing
Interfaces	
• Communication port, electrical	• Interfaces: – 2 x RS-232: 9-pin D-sub male connector, can be switched to RS-485 – 2 x RJ-45 (10/100 Mbps; TP)
• Connection to power supply	• 1 x 2-pin plug-in terminal strip
• Slot for exchangeable media	• For C-PLUG (C-PLUG optional)
Cable length	
• RS-232	• max. 6 m
• RS-485	• max. 30 m
• RJ-45	• max. 10 m
Power supply	24 V DC; min. 20.4 V; max. 28.8 V
Current consumption	
• From backplane bus	• maximum 200 mA
• From 24 V DC	• typically 150 mA, max. 170 mA
Power loss	typically 4.6 W
Backup battery (optional) for message memory and hardware clock	
• Battery type	• Lithium battery 6ES7 971-0BA00 Type Tadiran SL-306, cell type AA
• Voltage / capacity	• 3.6 V nominal / 2.3 Ah
• Current consumption during backup	• typically 100 µA, max. 160 µA
• Leakage current	• typically 15 µA
Clock	
• Hardware clock (real-time clock)	• yes
• Buffered	• yes (with backup battery)
• Deviation per day	• max. 4 s
Permitted ambient conditions	
• Operating temperature	• 0 °C to +60 °C
• Transport/storage temperature	• -40 °C to +70 °C
• Relative humidity	• Max. 95 % at +25 °C

TIM 4R-IE	
Construction	
• Module format	• Compact module for S7-300, double width
• Dimensions (W x H x D) in mm	• 80 x 125 x 120
• Weight	• Approx. 400 g
Degree of protection	IP 20
Configuration	
• Software for PG	• SINAUT ST7 configuration software for PG
• TD7 software for CPU (optional)	• SINAUT TD7 block library for CPU
• Storage of TIM configuration data	• Storage: – on internal TIM flash memory – on TIM in optional C-PLUG – on MMC of the S7-300-CPU, if TIM fitted in S7-300 controller
TIM can be operated in the role	
• Station	• yes
• Node station	• yes
• Master station	• yes
No. of TIM 4R-IE modules per S7-300/400	several: Number depends on the communication resources of the S7-300 CPU
Local communication	
• Over Ethernet interface with CPUs, PCs and other TIMs	• Possible over TD7onCPU (for S7-400) and S7 communication (for ST7cc/ST7sc and TIMs)
When used in an S7-300 controller	
• Over backplane bus with the S7-300-CPU	• Possible over TD7onCPU and TD7onTIM
• Over backplane bus with other TIMs in the rack	• Possible
• Over MPI port of the S7-300-CPU [1] with other CPUs, TIMs, and/or PCs	• Possible over TD7onCPU (for S7-300 and S7-400) and S7 communication (for ST7cc/ST7sc and TIMs)
Local communication	
• Over backplane bus with local CPU	• Possible over TD7onCPU [1] and TD7onTIM
• Over backplane bus with other local TIMs	• Possible
• Over MPI port of the local CPU with other CPUs and/or PCs	• Possible using TD7onCPU

TIM 4R-IE	
Work memory required on the S7 CPU	
• SINAUT TD7 on CPU (TD7onCPU)	• At least 20 KB; actual requirements depend on the amounts of data and range of functions
• SINAUT TD7 on TIM (TD7onTIM)	• Best case, 0 bytes
Message memory on TIM	
• Number of messages	• Approx. 56,000 messages
• Buffered	• yes (with backup battery)
Transmission protocols (RS-232/RS-485)	
Selectable protocols	• SINAUT ST7 • SINAUT ST1
Mode with dedicated line/wireless network	
• SINAUT ST7 protocol	• Modes: – Polling – Polling with time slots – Multi-master polling with time slots
• SINAUT ST1 protocol	• Modes: – Polling – Polling with time slots
Mode in dial-up network	
• SINAUT ST7 protocol	• Spontaneous
• GPRS/MSC tunnel on the basis of the SINAUT ST7 protocol	• Spontaneous
• SINAUT ST1 protocol	• Spontaneous
Asynchronous character format	
• SINAUT ST7 protocol, polling or spontaneous	• 10 or 11 bits
• SINAUT ST7 protocol, multi-master polling	• 10 bits
• SINAUT ST1 protocol, polling	• 11 bits
• SINAUT ST1 protocol, spontaneous	• 10 or 11 bits
Hamming distance d	
• SINAUT ST7 protocol	• 4
• SINAUT ST1 protocol	• 4
Ethernet	
Protocol	TCP/IP transport protocol

TIM 4R-IE	
Communication services	• SINAUT ST7 using S7 communication • SINAUT ST7 via MSC tunnel • PG communication
Number of connections:	
• S7 communication	• max. 64
• MSC connections	• depending on the network node type:
– as SMS master station	– max. 128
– as MSC station	– max. 1
Total number of simultaneously operable productive connections (S7 + MSC):	
• as SMS master station	• max. 128
• as MSC station	• max. 65
Also:	
• PG communication	• max. 2

[1] The MPI ports of the S7-300-CPU can be used with the following CPU types:
All variants of the CPU 312, CPU 312C, CPU 314 and CPU 314C;
the CPU 315-2 DP and the CPU 315F-2 DP

1.3.8 The TIM 4 variants

There are two variants of the TIM 4, the TIM 4R and TIM 4RD.

They do not have an integrated modem but have two combined RS-232/RS-485 ports to connect to a WAN. The TIM 4RD has a DCF77 radio clock receiver.

These communications processors share the following properties:

- S7-300 housing, double width
- Has an MPI interface
- Compact unit that can be used in a wide variety of situations:
  - as a communications processor (CP) in an S7-300
  - as a standalone device combined with one or more S7-400s, S7-300s or control center PCs (SINAUT ST7cc or ST7sc) over their MPI interface
- This means that these devices can handle SINAUT communication over up to two SINAUT WAN networks.
- The two transmission paths can be different or identical. They can be operated independently or form a redundant transmission path.

- When installed as a CP in an S7-300, the following communication is also possible:
  - With the CPU
  - over the MPI interface of this CPU with other CPUs and control center PCs (ST7cc, ST7sc) connected over the MPI bus.
  - with other TIMs in this rack
- Message memory for up to 10,000 data messages

The following figure shows one of the TIM 4 variants.

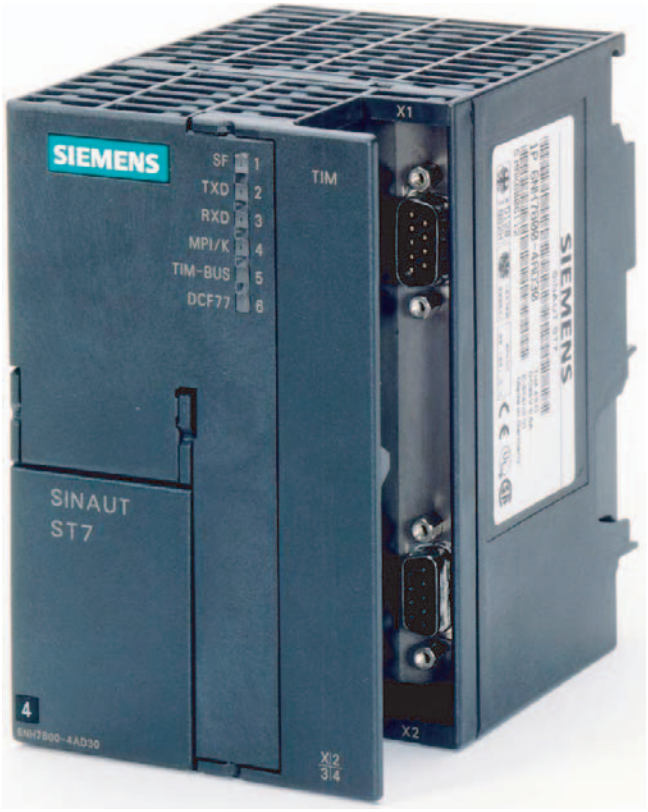

Figure 1-5 SINAUT TIM 4 communications module

The following figure shows the ports of the two TIM 4R variants (schematic representation with covers removed).

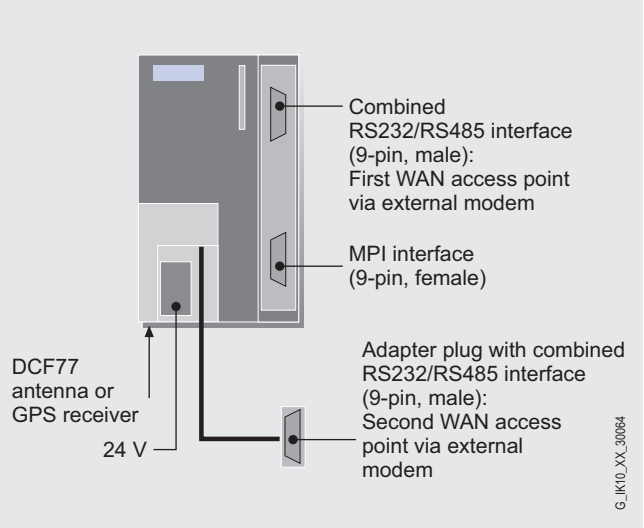

Figure 1-6 Ports of the TIM 4R

1.3.9 Design of the TIM 4 variants

The TIM 4 types have all the advantages of the SIMATIC S7-300 system design:

- Compact design; double standard width of the SM modules of the SIMATIC S7-300
- 2 WAN interfaces via 9-pin D-sub connector with a combined RS-232/RS-485 port for connection of an external modem or other data transmission device.
- MPI interface (9-pin SUB D socket) for connecting the TIM as a standalone device to one or more S7 CPUs or control center PCs
- 4-pin terminal block for connecting the external power supply of 24 V DC
- LEDs on the front panel with SF, TXD, RXD, and MPI/K indicators and, on the TIM 4RD with radio clock receiver, DCF77 indicator (the TIM-BUS LED is unassigned on the TIM 4 types).
- The DCF77 adapter cable supplied with the TIM 4RD has a BNC connector for connecting the antenna cable.
- Simple installation; the TIM 4 is mounted on an S7-300 rail. If it is installed in an S7-300 as a CP, it is connected to adjacent modules by means of the bus module connectors. As a standalone device, it is connected to the S7 CPU(s) or control center PC(s) via its MPI interface.
- The TIM 4 types can operate without fans. No backup battery or memory module is required.

1.3.10 Technical specifications of the TIM 4 variants

Technical specifications of the TIM 4R / 4RD

TIM 4R / TIM 4RD	
General	
Transmission speed	300 to 38,400 bps
Interfaces	
• Connection to external data transmission device	• 1 x 9-pin D-sub male connector, RS-232 can be switched over to RS-485
• 2nd Connection to external data transmission device	• 1 x RJ-45, RS-232 can be switched over to RS-485 (the supplied interface adapter cable provides a further 9-pin D-sub male connector)
• MPI bus	• 9-pin D-sub female connector
• DCF77 antenna (TIM 4RD)	• BNC socket (over supplied DCF77 adapter cable)
• Connection to power supply	• 4-pin terminal strip
Power supply	24 V DC; min. 20.4 V; max. 28.8 V
Current consumption	
• From backplane bus	• 60 mA (only when the TIM is used as a CP in an S7-300 rack)
• From 24 V DC	• 500 mA
Power loss	12.3 W
Permitted ambient conditions	
• Operating temperature	• 0 °C to +60 °C
• Transport/storage temperature	• -40 °C to +70 °C
• Relative humidity	• Max. 95 % at +25 °C
Construction	
• Module format	• Compact module for S7-300, double width
• Dimensions (W x H x D) in mm	• 80 x 125 x 120
• Weight	• Approx. 300 g
Degree of protection	IP 20
Configuration	
• Software for PG	• SINAUT ST7 configuration software for PG
• TD7 software for CPU (required in conjunction with CPU [1)])	• SINAUT TD7 block library for CPU
• Storage of TIM configuration data	• on internal TIM flash memory

TIM 4R / TIM 4RD	
TIM can be operated in the role	
• Station	• yes
• Node station	• yes
• Master station	• yes
Number of TIM 4R/4RD modules per S7-CPU or PC	Several, number depends on the communication resources of the S7-CPU or of the PC
Local communication in the rack of an S7-300	
• Over backplane bus with the S7-300-CPU	• Possible using TD7onCPU[1)]
• Over backplane bus with other TIMs in the rack	• Possible
• Over MPI interface of the S7-300-CPU [2)] with other CPUs, TIMs, and/or PCs	• Possible over TD7onCPU (for S7-300 and S7-400) and S7 communication (for ST7cc/ST7sc and TIMs)
Local communication in standalone mode	
• Over MPI interface of the CPU with CPUs, other TIMs and/or PCs	• Possible over TD7onCPU (for S7-300 and S7-400) and S7 communication (for ST7cc/ST7sc and TIMs)
Work memory required on the S7 CPU	At least 20 KB; actual requirements depend on the amounts of data and range of functions
Message memory on TIM	
• Number of messages	• Approx. 10,000 messages
• Buffered	• no
Transmission protocols	
Selectable protocols	• SINAUT ST7 • SINAUT ST1
Mode with dedicated line/wireless network	
• SINAUT ST7 protocol	• Modes: – Polling – Polling with time slots – Multi-master polling with time slots
• SINAUT ST1 protocol	• Modes: – Polling – Polling with time slots
Mode in dial-up network	
• SINAUT ST7 protocol	• Spontaneous
• SINAUT ST1 protocol	• Spontaneous

TIM 4R / TIM 4RD	
Asynchronous character format	
• SINAUT ST7 protocol, polling or spontaneous	• 10 or 11 bits
• SINAUT ST7 protocol, multi-master polling	• 10 bits
• SINAUT ST1 protocol, polling	• 11 bits
• SINAUT ST1 protocol, spontaneous	• 10 or 11 bits
Hamming distance d	
• SINAUT ST7 protocol	• 4
• SINAUT ST1 protocol	• 4

[1] The use of TD7onCPU over backplane bus is possible with the following CPU types:
All variants of the CPU 313C, CPU 314 and CPU 314C;
the CPU 315-2 DP and the CPU 315F-2 DP;
all variants of the C7 devices C7-633, C7-635 and C7-636

[2] The MPI interface of the S7-300-CPU can be used with the following CPU types:
All variants of the CPU 312, CPU 312C, CPU 314 and CPU 314C;
the CPU 315-2 DP and the CPU 315F-2 DP

1.4 The classic SINAUT ST7 modems

The SINAUT ST7 MD2, MD3 and MD4 modems are built into an S7-300 housing just like the TIM modules.



Figure 1-7 SINAUT MD modem

1.4.1 The modem variants

The following modem variants are available:

MD2	Dedicated line modem for multipoint connection, can be tapped, can also be used as a repeater, max 19,200 bps
MD3	Modem for the analog telephone network, max. 33600 bps, can also be used as dedicated line modem for a point-to-point link, max. 33600 bps in voice band
MD4	Modem for the digital ISDN network, max. 64,000 bps

These modems can be attached to the serial modem port of a suitably equipped TIM module (TIM 3V-IE and all TIM 4 variants).

Due to the design, the modems can be installed on an S7-300 standard rail just like the TIM modules. As an alternative, the modems can also be installed on a 35 mm standard mounting rail. In this case, an adapter is required that can be ordered separately.

The following figure shows the modem modules with further details (schematic representation with the covers removed).

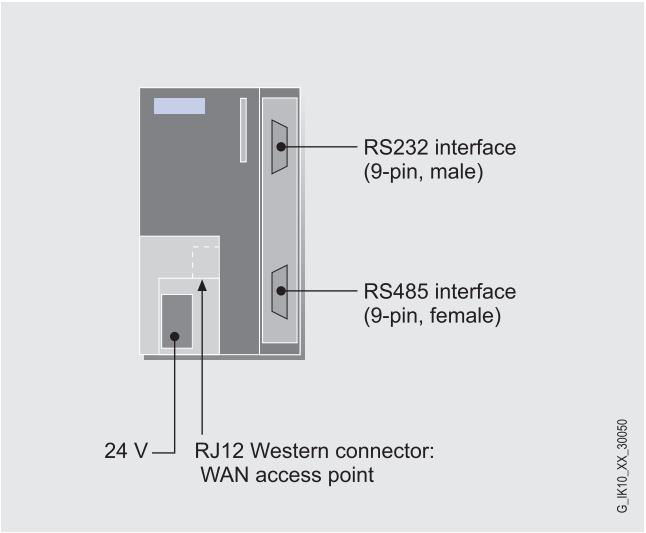

Figure 1-8 Connectors of a SINAUT ST7 modem

1.4.2 Overview of all modem variants and accessories

The modems are supplied along with the necessary WAN connecting cable. Cables for connecting the modems to a TIM must be ordered separately.

Table 1- 2 Overview of all modem variants

Short name	Order no.	Explanation
MD2	6NH7810-0AA20	Dedicated line modem for multipoint connection, can be tapped, can also be used as a repeater, max 19,200 bps
MD3	6NH7810-0AA30	Modem for the analog telephone network, max. 33,600 bps Can also be used as a dedicated line modem for a point-to-point link, max. 33,600 bps in the voice band
MD4	6NH7810-0AA40	Modem for the digital ISDN network, max. 64,000 bps
R-ADAPT	6NH7760-0AA	Adapter for installing the modem MD2 ... MD4 on a 35-mm standard rail

1.4.3 Technical specifications of the SINAUT ST7 modems

Technical specifications of the MD2 dedicated line modem

MD2	
Interfaces	
• Attachment to dedicated line	• RJ-12
• RS-232 attachment to DTE	• 9-pin D-sub male connector
• RS-485 attachment to DTE	• 9-pin D-sub female connector
• Connection to power supply	• 4-pin terminal strip
Power supply	24 V DC
Current consumption	
• From 24 V DC	• 100 mA
Power loss	2.4 W
Permitted ambient conditions	
• Operating temperature	• 0 °C through +60 °C
• Transport/storage temperature	• -40 °C through +70 °C
• Relative humidity	• Max. 95 % at +25 °C
Construction	
• Module format	• Compact module for S7-300, double width
• Dimensions (W x H x D) in mm	• 80 x 125 x 120
• Weight	• Approx. 300 g
Degree of protection	IP 20
Transmission path	2-wire, 2 x 2-wire or 4-wire, twisted pair, without loading coils or with few loading coils
Type of modulation	• Frequency shift keying (FSK)
Transmission speeds	• 1200 bps • 2400 bps • 9600 bps (not for telephone company leased lines) • 19,200 bps (not for telephone company leased lines)
Mode	
• With 2-wire or 2 x 2-wire	• Half duplex
• With 4-wire	• Duplex or half duplex
Transmit level can be set to	• 0 dB • -6 dB • -9 dB (for telephone company leased lines) • -15 dB

MD2	
Receive level	0 to -43 dB
Terminating resistor can be adjusted	
• For 1200 and 2400 bps	• 600 ohms
• For 9600 and 19,200 bps	• 150 ohms
• For tapping point	• > 6 kilohms
Ready to send	
• At 1200 bps	• After 7 ms
• At 2400 bps	• After 4 ms
• At 9600 and 19,200 bps	• After 0.5 ms
Lower / upper keying frequency	
• At 1200 bps	• 1300 Hz / 2100 Hz
• At 2400 bps	• 2400 Hz / 3300 Hz
• At 9600 and 19,200 bps	• 20,800 Hz / 33,600 Hz
Asynchronous character format	10 or 11 bits
Floating optical relay output	
• Max. connected voltage	• 60 V AC/DC
• Max. permitted permanent current	• 400 mA
• Max. R_{on}	• 3 ohms
Surge withstand capability $U_{1.2/50}$ to DIN VDE 0804 between supply circuit and	
• FSK remote line circuits	• 2.5 kV
• Optical relay output	• 2.5 kV
Compatible with SINAUT modems	
• MD100	• At 1200 bps
• MD124	• At 1200, 2400 and 19,200 bps
Certifications and approvals	EU approval CE 0682 X

Technical specifications of the MD3 analog dial-up modem

MD3	
Interfaces	
• Attachment to telephone network or dedicated line	• RJ-12
• RS-232 attachment to DTE	• 9-pin D-sub male connector
• RS-485 attachment to DTE	• 9-pin D-sub female connector
• Connection to power supply	• 4-pin terminal strip
Power supply	24 V DC

MD3	
Current consumption	
• From 24 V DC	• 200 mA
Power loss	4.8 W
Permitted ambient conditions	
• Operating temperature	• 0 °C through +60 °C
• Transport/storage temperature	• -40 °C through +70 °C
• Relative humidity	• Max. 95 % at +25 °C
Construction	
• Module format	• Compact module for S7-300, double width
• Dimensions (W x H x D) in mm	• 80 x 125 x 120
• Weight	• Approx. 300 g
Degree of protection	IP 20
Transmission path	Analog dial-up telephone network Dedicated line, 2-wire twisted pair, without loading coils
Available ITU transmission standards in the analog telephone network	• V.22 1200 bps, duplex • V.22bis 2400 bps, duplex • V.32bis 4800 bps, duplex • V.32bis 9600 bps, duplex • V.32bis 14,400 bps, duplex • V.34bis 19200 bps, duplex • V.34bis 33,600 bps, duplex
Error correction	V.42 and MNP4
Data compression	V.42bis and MNP5
Modem control	• AT commands • V.25bis commands
Metering pulse filter can be adjusted to	• 12 kHz • 16 kHz
Dialing mode	• Tone dialing • Pulse dialing
Loop power section	Exists, can be switched in or out
Loudspeaker	Exists, can be switched on or off
Line adjustment	• 600 ohms • Zr (frequency-dependent)
Transmit level can be set to	• -10 dB • -15 dB
Asynchronous character format	10 or 11 bits

MD3	
Standard dedicated line profile	• 300 bps (direct) • 1200 bps (direct) • 2400 bps (direct) • 9600 bps (direct) • 19,200 bps (direct) • 19200 bps (buffered) • 33,600 bps (buffered)
Compatible with SINAUT modems (as telephone modem)	
• MD125 • MDM2425B DX • MD3 (hardware version < 4)	• V.22 1200 bps, duplex • V.22bis 2400 bps, duplex • V.22bis 2400 bps, duplex • V.22 1200 bps, duplex • V.22bis 2400 bps, duplex • V.32bis 4800 bps, duplex • V.32bis 9600 bps, duplex • V.32bis 14,400 bps, duplex
Certifications and approvals	• Europe • USA • Canada
Recommended line quality for telephone company leased lines	• M1020 • M1025

Technical specifications of the MD4 ISDN dial-up modem

MD4	
Interfaces	
• Attachment to ISDN dial-up network or ISDN dedicated line	• RJ-12
• RS-232 attachment to DTE	• 9-pin D-sub male connector
• RS-485 attachment to DTE	• 9-pin D-sub female connector
• Connection to power supply	• 4-pin terminal strip
Power supply	24 V DC
Current consumption	
• From 24 V DC	• 100 mA
Power loss	2.4 W

MD4	
Permitted ambient conditions	
• Operating temperature	• 0 °C through +60 °C
• Transport/storage temperature	• -40 °C through +70 °C
• Relative humidity	• Max. 95 % at +25 °C
Construction	
• Module format	• Compact module for S7-300, double width
• Dimensions (W x H x D) in mm	• 80 x 125 x 120
• Weight	• Approx. 300 g
Degree of protection	IP 20
Transmission path	• Digital ISDN network • ISDN dedicated line, for example the ISDN dedicated line products of the German Telekom: – LeasedLink SFV Digital 64S – LeasedLink SFV Digital 64S2 – LeasedLink SFV Digital TS02
Available standard transmission standards	• V.110 1200 bps, duplex • V.110 2400 bps, duplex • V.110 9600 bps, duplex • V.110 19,200 bps, duplex • X.75 1200 bps, duplex • X.75 2400 bps, duplex • X.75 19200 bps, duplex • X.75 38,400 bps, duplex
Modem control	• AT commands • V.25bis commands
Asynchronous character format	10 or 11 bits
Certifications and approvals	Europe
Compatible with SINAUT modems	
• LGM64K	• V.110 9600 bps, duplex

1.5 Mobile wireless components

1.5.1 Area of application for GSM

Options for data transmission via GSM mobile wireless with SINAUT

Wherever no other transmission medium such as a dedicated line or telephone network is available and where the setting up of a separate wireless network would involve high costs, data transmission using a GSM network is a practical alternative.

This is, of course, possible only when there is an adequately strong GSM signal at the relevant location. The latest SINAUT quadband mobile wireless modem makes operation in the GSM networks available worldwide(850, 900, 1800 and 1900 MHz range).

SINAUT ST7 provides two options for data transmission over GSM mobile wireless:

1. With the GSM modem MD720-3
   - Data transmission on an "as necessary" basis by establishing a dial-up connection via a mobile wireless network (CSD: Circuit Switched Data)

     Dial-up connections are charged on a pay-by-time basis.
   - Data transmission with GPRS in a mobile wireless network

     Authentication and encryption are based on the MSC protocol. Charges are generally on a pay-by-volume basis.

   With both transmission methods, the transmission of SMS messages to standby personnel is also possible. Charges are based on the number of sent SMS messages.
2. With the GPRS router MD741-1

   Permanent online connection between station and control center using the GPRS service (General Packet Radio Service) of a GSM provider. Data can be transmitted immediately at any time.

   Although permanently online, only the volume of transmitted data is charged.

   To communicate with remote devices, the MD741-1 establishes a VPN tunnel and encrypts according to the IPSec protocol.

1.5.2 GSM modem MD720-3

With the GSM modem MD720-3, a TIM can transmit data by establishing a dial-up connection over a mobile wireless network. The maximum data transmission speed is 9600 bps.

For data transmission, you can choose between two transmission methods:

- Transmission using CSD (Circuit Switched Data)
  - Data can be transmitted between two SINAUT subscribers both from mobile wireless to mobile wireless(from GSM modem to GSM modem) and from mobile wireless to fixed network (phone or ISDN attachment; ISDN is recommended). With this type of data transmission, the GSM provider charges according to the time the dial-up connections were established.
  - When using CSD, apart from transmitting data, the MD720-3 can also be used to send SMS messages directly to personnel on call. Receipt of an SMS can be acknowledged using the mobile phone. If no acknowledgement is received, it is possible to send the SMS to a different mobile phone. The GSM provider charges according to the number of sent SMS messages.
- Transmission via GPRS using the MSC protocol

  The data transmission between station and master station is via GPRS in the mobile wireless network. To allow direct communication between stations, the master station forwards the messages to the target subscribers. The GSM provider generally charges on a pay-by-volume basis.

Note

The MD720-3 modem is used not only in SINAUT ST7 but also in SINAUT MICRO SC. In this case, S7-200 stations can transmit data over GPRS using the MD720-3.

Along with the Ethernet TIMs as of firmware version V2.0, the MD720-3 can also transmit data via GPRS in SINAUT.

In a station, the MD720-3 can be connected to the RS-232 interface of a suitably equipped TIM module:

- When using CSD: All TIM 3V-IE and TIM 4 variants
- When using GPRS: Connection to any Ethernet TIM

The cable for connecting the MD720-3 must be ordered separately with a TIM.

The MD720-3 can be installed on a 35 mm standard rail.



Figure 1-9 Modem MD720-3

The following figure shows further details of the modem module.

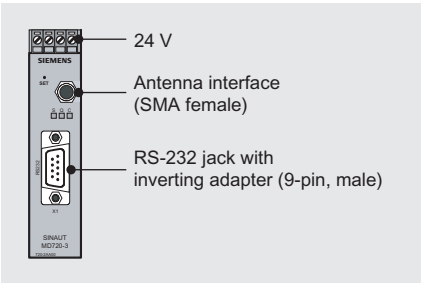

Figure 1-10 Connectors of the MD720-3 modem

1.5.3 EGPRS/GPRS router MD741-1

Using the EGPRS/GPRS router MD741-1 (or the predecessor module MD740-1), a TIM can establish a permanent connection between a station and control center using the GPRS service of a GSM mobile wireless provider. Since the connection is always online, data can be sent as soon as it becomes available.

Apart from GPRS, the faster service EGPRS (EDGE) is also supported.

The control center must be permanently reachable from the GPRS network. This can be via a dedicated line between control center and GPRS provider or a permanent connection from the control center to the Internet, for example DSL.

A direct GPRS connection from GPRS modem to GPRS modem is not possible. Direct data exchange between two SINAUT ST7 stations that both communicate over GPRS is possible over a TIM module in the control center.

Since the data transmission from the GPRS provider to the control center is often over the Internet, the MD741-1 has an integrated VPN router and a firewall. This allows GPRS connections with optimum security to be established between the station and control center.

The maximum data transmission speed with GPRS is 54 Kbps.

The MD741-1 can be connected to the Ethernet connector of any Ethernet TIM. It can be installed on a 35 mm standard rail.



Figure 1-11 SINAUT MD741-1

The following figure shows further details of the modem module.

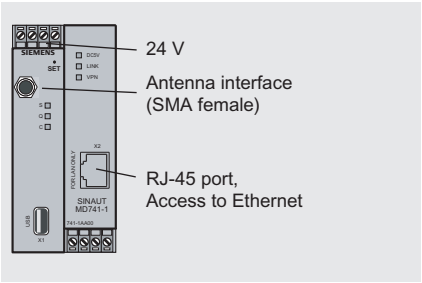

Figure 1-12 Connectors of the MD741-1 router

1.5.4 ANT794-4MR GSM/GPRS antenna

The ANT794-4MR GSM/GPRS antenna

The quadband ANT794-4MR antenna is available for use in GSM/GPRS networks. To improve the field strength, it can be installed inside and outside buildings.



Figure 1-13 ANT794-4MR GSM/GPRS antenna

Short name	Order no.	Explanation
ANT794-4MR	6NH9 860-1AA00	GSM/GPRS quadband antenna; weatherproof for indoor and outdoor areas; 5 m connecting cable connected permanently to the antenna; SMA connector, including installation bracket, screws, wall plugs

The antenna must be ordered separately.

1.5.5 Technical specifications of the SINAUT mobile wireless components

Technical specifications of the MD720-3 GSM modem

MD720-3	
Transmission speed	
• RS-232	• 300 bps to 57,600 bps
• CSD in GSM network	• 9,600 bps
Interfaces	
• RS-232	• 9-pin D-sub female connector (with gender changer pin)
• GSM antenna	• SMA female connector, nominal impedance: 50 ohms
• Connection to power supply	• 4-pin screw terminal
Frequency ranges	850, 900, 1800, 1900 MHz
Transmit output power	
• 850 MHz	• Max. 2 W
• 900 MHz	• Max. 2 W
• 1800 MHz	• Max. 1 W
• 1900 MHz	• Max. 1 W
Power supply	12 - 30 V DC (24 V DC nominal)
Current consumption in send mode	
• at 12 V DC	• I_n: 430 mA
• at 24 V DC	• I_n: 140 mA
Current consumption in receive mode	
• at 12 V DC	• 90 mA
• at 24 V DC	• 50 mA
Power loss	typically 5 W max. 6.2 W
Permitted ambient conditions	
• Operating temperature	• -20°C through +60°C
• Transport/storage temperature	• -25°C through +85°C
• Relative humidity	• Max. 95% at +25°C
Construction	
• Design	• DIN rail housing
• Materials	• Plastic
• Dimensions (W x H x D) in mm	• 22.5 x 99 x 114
• Weight	• Approx. 150 g
Installation	Snap onto 35 mm standard rail
Degree of protection	IP40

MD720-3	
Asynchronous character format	10 bits
Modem control	over AT commands
Certifications and approvals	
• CE	• yes
• R&TTE (GSM)	• yes
• EMV / ESD	• EN 55024, EN 55022 class A, EN 61000-6-2
• ATEX	• II 3G Ex nA II T4 Ta, (Ta = -20°C...+60°C) KEMA 03 ATEX 1229 X
• FM	• CLI, DIV2, GP. A,B,C,D T4 Ta, (Ta = -20°C...+60°C) CLI, Zone 2 IIC, T4 Ta, (Ta = -20°C...+60°C)
• UL	• E301826
National approvals	You will find the latest information on the Internet at (http:/www.siemens.com/simatic-net/ik-info)

Technical specifications of the MD741-1 GPRS router

MD741-1	
General	
Interfaces	
• Application interface	• RJ-45 female (10/100 Mbps, TP, autocrossover)
• Service interface	• USB socket type A
• Antenna connector	• SMA female connector, nominal impedance: 50 ohms
• Connection to power supply	• 4-pin screw terminal
Power supply	12 - 30 V DC (24 V DC nominal)
Current consumption	
• on an existing GPRS connection with data exchange and GSM900 power level 10 (transmit power: 23 dBm)	• I_n: 147 mA at 24 V (I_{burst}: 550 mA) 4.62 ms burst repetition rate
Power loss	typically 4.0 W at 24 V
Permitted ambient conditions	
• Operating temperature	• -20°C through +60°C
• Transport/storage temperature	• -40°C through +70°C
• Relative humidity	• Max. 95 % at +25°C

MD741-1	
Construction	
• Design	• DIN rail housing
• Materials	• Plastic
• Dimensions (W x H x D) in mm	• 45 x 99 x 114
• Weight	• Approx. 280 g
Installation	Snap onto 35 mm standard rail
Degree of protection	IP20
GSM/GPRS	
Frequency ranges	800, 900, 1800 and 1900 MHz
Transmit output power (for 8-PSK)	
• 850 / 900 MHz	• +27 dBm (±3 dB)
• 1800 / 1900 MHz	• +26 dBm (+3 / -4 dB)
GPRS multislot class	Class 12...8: • 1...4 downlinks • 1...4 uplinks max. 5 slots
EGPRS multislot class	Class 12...8: • 1...4 downlinks • 1...4 uplinks max. 5 slots
GPRS coding methods	CS-1, CS-2, CS-3, CS-4
GPRS connection establishment	Automatic when power supply turned on
Virtual Private Network (VPN)	
Protocol	IPSec (tunnel and transport mode)
Encryption	IPSec 3DES with 168 bits, IPSec AES with 128, 192 and 256 bits
Internet Key Exchange (IKE)	with main mode and quick mode
Authentication	Pre-Shared Key (PSK), X.509v3 certificates
Packet authentication	MD5, SHA-1
Miscellaneous	DynDNS, NAT-T, Dead Peer Detection (DPD)
Firewall	
• Stateful Packet Inspection	• yes
• Anti-Spoofing	• yes
• Network Address Translation (NAT) / IP masquerade)	• yes
• Port forwarding	• yes
Other features	

MD741-1	
DNS cache, DHCP server, NTP, remote logging	yes yes yes yes
Configuration	with standard Web browser
Tests, approvals	
• CE	• yes
• R&TTE (GSM)	• yes
• GSM/GPRS	• with GCF approval
• EMC / ESD	• EN 55024, EN 55022 class A, EN 61000-6-2
• Electrical safety	• EN 60950
• ATEX	• II 3G Ex nA IIC T4 Ta = -20 °C...+60 °C KEMA 03 ATEX 1229 X EN60079-15 (type of protection "n")
• FM	• CLI, DIV2, GP. A,B,C,D T4 Ta, Ta = -20°C...+60°C CLI, Zone 2 IIC, T4 Ta, Ta = -20°C...+60°C
• UL / CSA	• UL 60950, 1st edition CSA C22.2 No. 60950
National approvals	You will find the latest information on the Internet at (http:/www.siemens.com/simatic-net/ik-info)

Technical specifications of the ANT794-4MR GSM/GPRS antenna

ANT794-4MR	
Mobile wireless networks	GSM/GPRS
Frequencies	850 MHz, 900 MHz, 1800 MHz, 1900 MHz, 2200 MHz
Characteristics	omnidirectional
Antenna gain	0 dB
SWR	< 2,0
Max. power	20 W
Polarity	linear vertical
Connector	SMA
Length of antenna cable	5 m
External material	Hard PVC, UV-resistant
Degree of protection	IP20

ANT794-4MR	
Permitted ambient conditions	
• Operating temperature	• -40 °C to +70 °C
• Transport/storage temperature	• -40 °C to +70 °C
• Relative humidity	• 100 %
Construction	
• Dimensions (D x H) in mm	• 25 x 193
• Weight	• 380 g (incl. packing)
• Installation	• with supplied bracket

1.6 LTOP overvoltage protection modules

1.6.1 Variants and overview of the LTOP overvoltage protection modules

Copper dedicated lines are highly susceptible to electromagnetic interference. The coupling of extraneous voltages can be inductive or capacitive, for example due to the effects of lightning. Direct conductive coupling is also possible due to bad insulation.

The LTOP overvoltage protection modules limit extraneous voltage and overvoltage to a non-critical level. The floating transformer also provides electrical isolation preventing coupling of voltages into other cable sections. An LTOP protects persons and investment and is therefore an indispensable safety element in private dedicated line networks.



Figure 1-14 LTOP2 overvoltage protection module

The LTOP overvoltage protection module is available in two variants:

LTOP 1
Overvoltage protection module for use at the start or end of a 2-wire dedicated line.

LTOP2
Overvoltage protection module for use at the start or end of a 4-wire dedicated line or in a 2-wire tapping point. In a 4-wire tapping point, two LTOP2 modules are required.

Table 1- 3 Overview of the LTOP modules

Short name	Order no.	Explanation
LTOP1	6NH9821-0BC11	Single line transformer LTOP1, with one OPM overvoltage protection module for use at the start or end of a 2-wire dedicated line
LTOP2	6NH9821-0BC12	Double line Transformer LTOP2, with two OPM overvoltage protection modules for use at the start or end of a 4-wire dedicated line or a 2-wire tapping point
OPM	6NH9821-0BB00	OPM overvoltage protection module for LTOP1 and LTOP2, plug-in (pack of 4)

The two LTOP variants have both screw terminals and an RJ-12 Western jack. The WAN cable (RJ-12 - RJ-12) supplied with the MD2 and MD3 modems (used as dedicated line modems) can be connected directly to this RJ-12 jack.

Note

The LTOP modules are not suitable for protecting dial-up connections (telephone and ISDN network). Companies such as Phoenix and Dehn offer TAE6, S0, RJ-12, and RJ-45 jacks with overvoltage protection.

1.6.2 Technical specifications of the LTOP overvoltage protection module

LTOP						
Transmission paths	Private transmission lines with or without loading coils					
Transmission ratio	1 : 1; ± 5 % (e.g. 600/600 ohms in the voice band)					
Transmission range	300 Hz to 35 kHz					
Frequency-dependent attenuation	Attenuation [dB]	Frequency [Hz]	Transmission speed [bps]			
			MD100	MD124	MD2	MD3
	0.2	1300 ... 3300	1200	1200 2400	1200 2400	All
	0.8	5200 ... 8400		4800		
	0.9	10400 ... 16800		9600		
	1.0	20800 ... 30600		19200	9600 19200	
Insulation resistance	> 2000 Mohms					
Test voltage	4 kV, 50 Hz, 10 s					
Surge withstand capability	6 kV/2 J to EN 60 099-1					
Normal discharge current i_{sn} (8/20 µs)	5 kA					
Output voltage limitation at i_{sn}	Approx. 15 V					
Telecontrol connector	Screw terminals Cross-section 0.2 – 4 mm^2 with rigid cores Cross-section 0.2 – 2.5 mm^2 with flexible cores					

LTOP	
Modem connector	Screw terminals (wire cross-section, see telecontrol line attachment) or RJ-12 jack for Western plug
Installation location	As close as possible to where cable enters building
Permitted ambient conditions	
• Operating temperature • Transport/storage temperature • Relative humidity	• 0 °C through +60 °C • -40 °C through +70 °C • Max. 95 % at +25 °C
Construction	
• Dimensions (W x H x D) in mm • Weight	• 90 x 75 x 110 mm • LTOP1: 300 g • LTOP2: 320 g • OPM: 10 g
Degree of protection	IP 20
Installation	DIN rail TS35 (35 mm; EN 50 022)

1.7 Radio clock components

1.7.1 Accessories for DCF77

DCF77 radio clock

An adapter cable is required to connect the DCF77 radio clock to an indoor or outdoor antenna. The cable has a BNC male connector to which the normal antenna cable can be connected.

The adapter cable is supplied with every TIM module with an integrated DCF77 radio clock. It can also be ordered as a spare part under the number listed in the following table.

Table 1- 4 Adapter cable for a TIM with integrated DCF77 radio clock

Order no.	Description	Illustration
6NH7700-0AD15	Adapter cable for connecting a DCF77 radio clock integrated in a TIM, to adapt the internal connector to the external BNC connector. Cable length 1.5 m	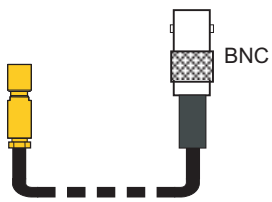

In addition to the adapter cable, there is also a selection of antennas.

DCF77 indoor antenna

An indoor antenna can be used in buildings in which there is no source of interference for the DCF77 signal. It should not be installed in the vicinity of televisions, monitors, thyristor controls, network cables or fluorescent lights.

DCF77 outdoor antenna for flat roof, wall or mast installation

Whenever possible, a professional radio clock system should use an outdoor antenna. In contrast to an indoor antenna whose environment can change constantly due to the technical activity in the building, the conditions for an outdoor antenna are practically constant. Indirect lightning protection is strongly recommended for an outdoor antenna.



Figure 1-15 Examples of DCF77 antennas, left an indoor antenna, right an outdoor antenna

The following figure shows the interconnection of the various DCF77 components (the adapter cable 6NH7700-0AD15 is supplied with each TIM with an integrated DCF77 radio clock receiver).

If lightning protection 6NH9831-2AA is used, this should be installed whenever possible at the entrance to the building. To connect the lightning protection to the adapter cable of the TIM, use a separate antenna cable (BNC female connectors at both ends, similar to the antenna cable supplied with the indoor or outdoor antenna). You can either assemble this cable yourself or purchase it from a dealer, for example from Hopf Elektronik GmbH (www.hopf.com).

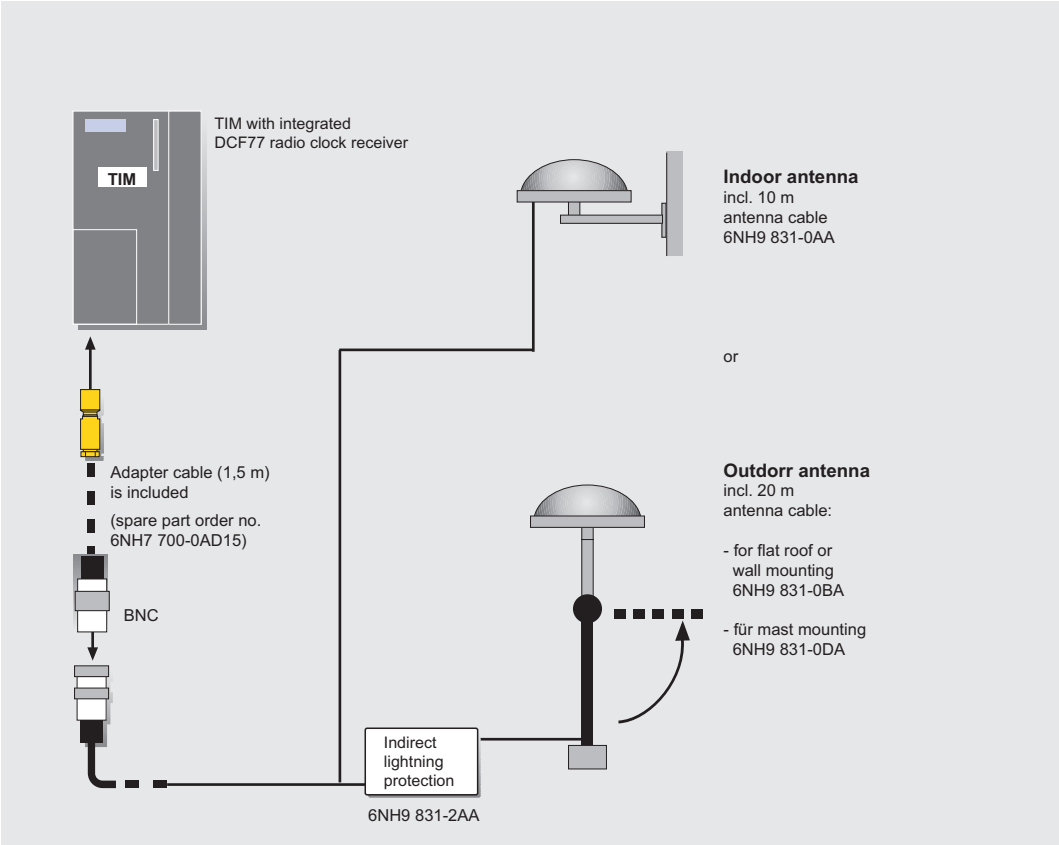

Figure 1-16 Connecting DCF77 antennas

1.7.2 GPS receiver

The reception of the DCF77 radio clock signal is limited to western Europe (approximately 800 km radius from Frankfurt am Main, Germany). In regions where this signal cannot be received, a GPS receiver can be used to acquire the local time from a satellite-based GPS system (Global Positioning System). For this situation, the SINAUT system includes a GPS receiver whose output signal simulates the DCF77 signal. This receiver can therefore be connected directly to the DCF77 receiver in the TIM and can supply the TIM with the current time.

This GPS receiver ships as a complete package and includes the following:

- GPS receiver module that can be fitted to a 35-mm standard rail
- GPS outdoor antenna for wall or mast mounting, including 25 m antenna cable
- BNC adapter to connect the DCF77 adapter cable of the TIM to the BNC socket of the GPS receiver
- Software for configuring the GPS receiver (for Windows 95/98, NT, 2000, ME and XP)
- PC adapter cable, length 1.5 m
- Documentation

Since the GPS antenna is an outdoor antenna, you should also install the available lightning protection device.



Figure 1-17 The GPS receiver module (left) and the recommended lightning protection device for outdoor antennas (right)

The following figure shows the interconnection of the various GPS components (the adapter cable 6NH7700-0AD15 is supplied with each TIM with an integrated DCF77 radio clock receiver).

If lightning protection 6NH9831-8LA is used, this should be installed whenever possible at the entrance to the building. To connect the lightning protection to the adapter cable of the TIM, use a separate antenna cable (BNC female connectors at both ends, similar to the antenna cable supplied with the outdoor antenna). You can either assemble this cable yourself or purchase it from a dealer, for example from Hopf Elektronik GmbH (www.hopf.com).

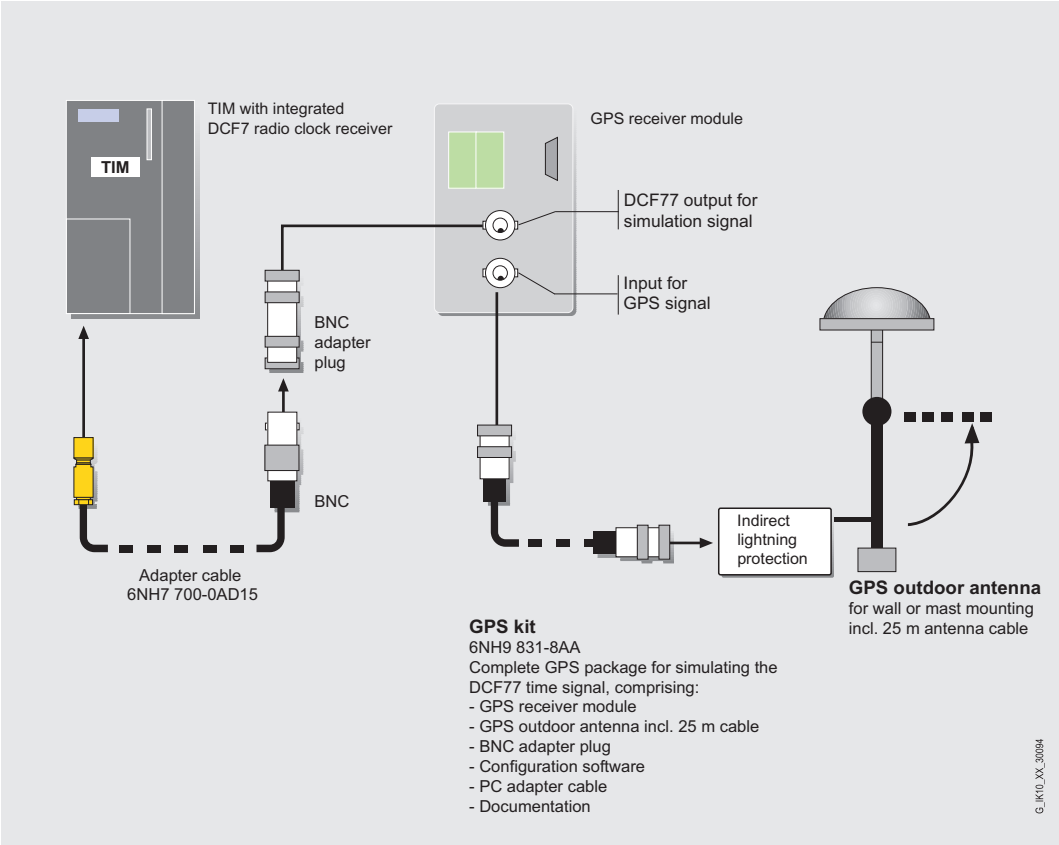

Figure 1-18 GPS components for receiving the radio clock signal

1.7.3 Overview of the radio clock components

The following table shows the accessories for the DCF77 radio clock of the TIM.

Table 1- 5 Overview of the accessories for the DCF77 radio clock of the TIM

Short name	Order no.	Explanation
DCF INANT	6NH9831-0AA	DCF77 indoor antenna. The antenna is supplied with a 10 m cable and BNC connector.
DCF AUANT-D	6NH9831-0BA	DCF77 outdoor antenna for flat roof or wall mounting. The antenna is supplied with a 20 m cable and BNC connector.
DCF AUANT-M	6NH9831-0DA	DCF77 outdoor antenna for mast mounting. The antenna is supplied with a 20 m cable and BNC connector.
DCF IND-BS	6NH9831-2AA	Lightning protector for DCF77 outdoor antenna.

Short name	Order no.	Explanation
GPS kit	6NH9831-8AA	GPS complete package for simulating the DCF77 time signal, consisting of GPS receiver, GPS outdoor antenna including 25 m cable, BNC adapter connector, configuration software, PC adapter cable, and documentation.
GPS IND-BS	6NH9831-8LA	Lightning protector for GPS outdoor antenna.

1.7.4 Technical specifications of the radio clock components

Technical specifications of DCF77 antennas

DCF77 antennas	
General	
Power supply (over antenna cable)	1.7 to 5 V DC
Impedance	50 ohms
Power gain	20 dB
Max. cable length without amplification	250 m
Plastic housing	Light-resistant
Bandwidth	4 kHz
Indoor antennas	
Humidity	95% no condensation
Degree of protection	IP50
Temperature range	
• Operation	• 0 °C through +80 °C
• Storage	• -50 °C through +85 °C
Outdoor antennas	
Wind load	max. 180 km/h
Degree of protection	IP65
Temperature range	
• Operation	• -30 °C through +80 °C
• Storage	• -50 °C through +85 °C
Humidity	100%
Lightning protection	
Housing material	Die cast aluminum housing
Dimensions (W x H x D) in mm	250 x 105 x 95
Weight	Approx. 3.5 kg
Grounding point	M6 threaded connection
• Thickness of copper strand	• min. 10 mm2
• length of copper strand	• max. 10 m
Current pulse withstand 8/20 µs wave	10 kA

DCF77 antennas	
Response time	< 1 ns
Protection level at 6 kV 1.5/50 µs wave at input	< 12 V
Insertion loss for DCF77 signal	Max. 3 dB
Input / output	BNC female / BNC female
Input / output impedance	50 ohms
Degree of protection	IP40
Temperature range	
• Operation	• -20 °C through +80 °C
• Storage	• -40 °C through +85 °C
Humidity	95% no condensation

Technical specifications of the GPS receiver

GPS receiver	
Interfaces:	
• RS-232/RS-422	• 9-pin D-sub male connector
• Pulse outputs	• Screw terminals
• GPS input	• BNC socket
• DCF77 simulation output	• BNC socket
Connector for power supply	Screw terminals
Power supply	18 to 60 V DC
Power consumption	6 VA
Construction	
• Housing material	• Aluminum
• Dimensions (W x H x D) in mm	• 65 x 105 x 130
• Weight	• Approx. 700 g
Installation	On 35 mm standard rail
Quartz accuracy	± 0.1 ppm after GPS control/synchronization and at constant temperature
Emergency clock accuracy	± 25 ppm at 25 °C
Maintenance-free emergency clock backup	3 days
Type of receiver	8-channel phase tracking receiver
Evaluation	L1 frequency 1575.42 MHz, C/A code
Sensitivity	-143 dB
Synchronization time	
• Cold restart (initial installation without position information)	• 30 min to 4 h
• Warm start (power down < 3 days)	• Approx. 1 min.

GPS receiver	
Temperature range	
• for specified data	• 0 to 50 °C
• with poorer free-run (accuracy) characteristics	• 0 to 70 °C
Outdoor antennas	
Type of antenna	Micro-strip line with preamplifier
Center frequency	1575.42 MHz
Bandwidth	10 MHz
View angle	+10° above horizon
Power supply (over antenna cable)	4.5 to 7 V DC
Impedance	50 ohms
Power gain	20 dB
Max. cable length without amplification	25 m
Plastic housing	Light-resistant
Wind load	max. 180 km/h
Degree of protection	IP65
Temperature range	
• Operation	• -30 °C through +80 °C
• Storage	• -40 °C through +85 °C
Humidity	100%
Lightning protection	
Housing material	Pressure die cast aluminum housing
Dimensions (W x H x D) in mm	250 x 105 x 95
Weight	Approx. 1.8 kg
Grounding point	M6 threaded connection
• Thickness of copper strand	• min. 10 mm2
• length of copper strand	• max. 10 m
Current pulse withstand 8/20 µs wave	10 kA
Response time	< 1 ns
Protection level at 6 kV 1.5/50 µs wave at input	< 12 V
Insertion loss for DCF77 signal	Max. 3 dB
Input / output	BNC female / BNC female
Input / output impedance	50 ohms
Degree of protection	IP40
Temperature range	
• Operation	• -20 °C through +80 °C
• Storage	• -40 °C through +85 °C
Humidity	95% no condensation

1.8 Connecting cables

A series of standard connecting cables is available to connect individual SINAUT components with each other and to WANs. Some of these connecting cables are supplied along with the hardware components. Other cables can be ordered as necessary.

1.8.1 Cable for connecting TIM and modem modules

Table 1- 6 Standard cables for connecting TIM and modem modules

Order no.	Description	Illustration
6NH7701-4AL	Cable for connecting a TIM 3V-IE / TIM 4 (RS-232) with one of the SINAUT ST7 MD2, MD3 or MD4 modems (RS-232). Also suitable for connecting the modems listed above to a SIMATIC point-to-point CP such as the CP 340, CP 341 or CP 441 with RS-232 port. Cable length 1.5 m	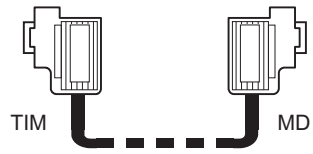
6NH7701-4DL	Cable for connecting a TIM 4 (RS-485) with multiple SINAUT ST7 dedicated line modems of the type MD2 or MD3 (RS-485) connected in parallel. Cable length 1.5 m	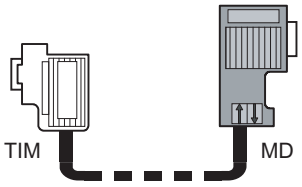
6NH7701-1CB	Cable for connecting two MD2 modems (RS-232) to form a repeater. Cable length 0.3 m	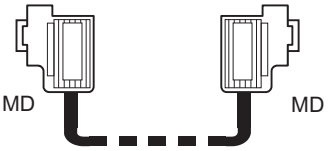
6NH7701-5AN	Cable for connecting a TIM 3V-IE / TIM 4 (RS-232) with the GSM mobile wireless modem MD720-3 (RS-232). Also suitable for third-party modems or wireless devices with RS-232 standard. Cable length 2.5 m.	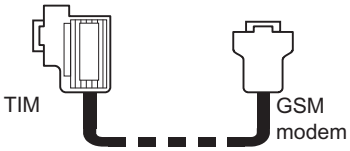
6NH7701-4BN	Cable with one end without connector for connection of a TIM 3V-IE/TIM 4 to a third-party modem or wireless device (RS-232). Cable length 2.5 m	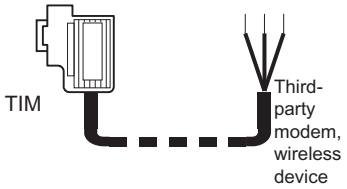
6NH7701-0AR	Test cable. Cable for connecting two TIMs of the types TIM 3V-IE / TIM 4 over their RS-232 ports without modems (null modem). Cable length 6 m	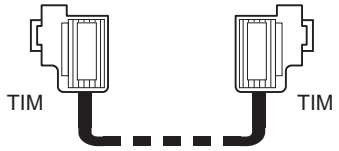

Order no.	Description	Illustration
6NH1701-7AN	Cable for connecting a TIM 11 (RS-232) with one of the SINAUT ST7 MD2, MD3 or MD4 modems (RS-232). Cable length 2.5 m	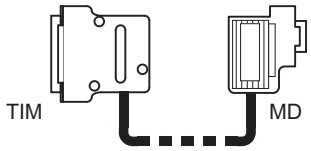
6NH1701-7BK	Cable for connecting a TIM011B (RS-232) with one of the SINAUT ST7 MD2, MD3 or MD4 modems (RS-232). Cable length 1.0 m.	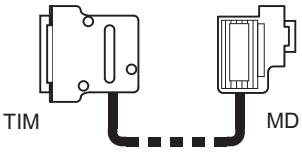

1.8.2 WAN connecting cables

A 6NH7700-xxx connecting cable ships with every MD modem. This can be used to connect the modem to the relevant WAN network.

The connecting cables are also available as spares under the number shown.

Table 1- 7 WAN connecting cables

Order no.	Description	Illustration
6NH7700-2AR60	Connecting cable with 2 x RJ-12 plugs for connection to an MD2 modem (RJ-12) with an LTOP overvoltage protection module (RJ-12). Cable length 6 m	
6NH7700-3BR60	Connecting cable with 2 x RJ-12 Western plug and snap-on TAE6N plug to connect an MD3 modem (RJ-12) to a telephone jack (TAE6N) or an LTOP overvoltage protection module (RJ-12) if the MD3 modem is being operated as a dedicated line modem. Cable length 6 m	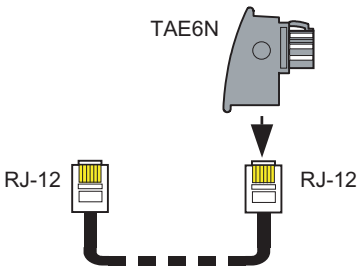
6NH7700-4AR60	Connecting cable with RJ-12 and RJ-45 plug to connect an MD4 modem (RJ-12) with an ISDN-S_0 jack (RJ-45). Cable length 6 m	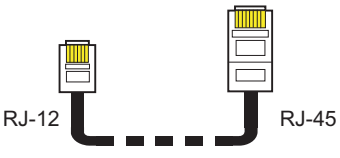

1.8.3 TIM 4R / 4RD interface adapter cable

The TIM 4R / TIM 4RD has a second serial interface X3 (combined RS-232/RS-485). The interface (8-pin RJ-45 jack) is accessible from below.

An adapter cable is required to connect the second serial port with an external modem or other transmission device. At one end of this cable, there is an RJ-45 plug and at the other end, a 9-pin D-sub miniature male connector to which the normal connecting cable to the modem or transmission device can be connected.

The adapter cable is supplied with each TIM 4R/4RD module. It can also be ordered as a spare part under the number listed in the following table.

Table 1- 8 TIM 4R / 4RD interface adapter cable

Order no.	Description	Illustration
6NH7700-0AS05	Adapter cable for connecting the 2nd serial RS-232/RS-485 port integrated in a TIM 4R / 4RD to convert the internal plug (RJ-45) to the 9-pin D-sub miniature male connector required externally. Cable length 0.5 m	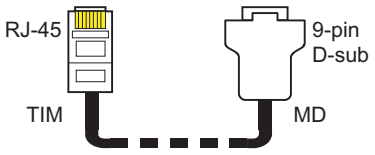

1.9 The SINAUT ST7 standard software package

The SINAUT ST7 standard software package comes on a CD-ROM and is made up of two parts:

1. The SINAUT TD7 library that contains blocks for the S7 CPU
2. The SINAUT ST7 configuration and diagnostics software for installation on the programming device

The CD-ROM also contains the SINAUT ST7 manual in electronic form (German/English).

The software package is a working package that can be used for any number of SINAUT projects without licensing.

1.9.1 SINAUT TD7 Library, blocks for the CPU

The SINAUT TD7 library is a software package with blocks for the CPU. The package was designed so that it can run both on an S7-400 and on and S7-300 CPU. There are only a few blocks intended specifically for the S7-300 or S7-400 CPUs.

The SINAUT TD7 software in the stations allows change-driven transmission of process data between the individual CPUs and the control center, for example ST7cc. Failure of connections, CPUs, or the control center are displayed. Once a problem has been corrected or the CPUs or control center has started up, data is updated automatically. When necessary, data messages can be given a time stamp.

Note

Data communication from the CPU to other CPUs or to ST7cc/ ST7sc over a WAN connection can only be implemented with the SINAUT TD7 software. This is not possible with the S7 communication SFBs/SFCs for configured and unconfigured connections. These are suitable only for local communication without a gateway.

The essential components are the package are as follows:

- **Basic and auxiliary blocks**
  Most of these blocks are always required on the CPU. A few are purely optional. The basic blocks handle central tasks such as startup, monitoring of connections and connection partners, general requests, time management, handling communication etc. The auxiliary blocks enter messages in the send buffer or fetch them from the receive buffer, handle send and receive jobs for specific connections or provide information as a result of searches.
- **Data point typicals**
  These blocks are included in the CPU program depending on the type and amount of data to be transferred. They put messages together when data changes and output received process data.

To operate correctly, the TD7 package requires some data blocks that are generated by the SINAUT ST7 configuration tool. These are as follows:

- **Central records DB**
  This contains all the centrally required data including the records of all communication partners and the connections to be managed.
- **Communication DBs**
  A separate communication DB is created for each connection. This DB contains a send and receive buffer and all the data required for controlling and monitoring the connection.

The package is completed by blocks for diagnostics and alarms:

- **TestCopy**
  This block can be used to log which messages are sent and/or received within the CPU.
- **SMS_Control**
  When certain user-defined events occur, this block puts together appropriate text messages that can be transmitted as SMS messages to a specified mobile phone.

Note

With the Ethernet TIMs, you can choose between two alternatives:

1. As described above, the SINAUT program is created with the TD7 blocks and therefore runs on the CPU and takes up a corresponding amount of work memory (TD7onCPU)
2. The SINAUT program runs on the TIM (TD7onTIM). In an ideal situation, no program memory on the CPU is required for SINAUT.

1.9.2 SINAUT ST7 configuration software for the PG

The configuration tools can be used with Windows Server 2003 SP2, Windows XP SP2 or Windows Vista 32 Bit Ultimate and Business. STEP 7 software V5.4 SP4 or higher must also be installed.

The configuration software includes the following components:

- A module manager that expands the *HW Config* STEP 7 tool. It handles the display and parameter assignment of the TIM modules in *HW Config*.
- A WAN manager that expands the *NetPro* STEP 7 tool. This is responsible for the display and parameter assignment of the SINAUT WAN networks SINAUT network nodes in *NetPro*.
- The SINAUT ST 7 configuration tool is used for project-wide functions such as SINAUT connection configuration and SINAUT subscriber management.
- The SINAUT ST7 diagnostics and service tool. In addition to the diagnostic functions familiar from STEP 7. Using the service tool, it is, for example, possible to load new software on a TIM.

The module manager for SINAUT ST7

The SINAUT module manager expands the catalog of the STEP 7 hardware configuration tool HW Config. The *SIMATIC 300* folder was extended by the *SINAUT ST7* folder. This lists all available TIM modules.

You can select the required TIM module from the *SINAUT ST7* folder and install it in the S7 rack.

You can then open a properties dialog and assign the required parameters to the module. This dialog is also available in the *NetPro* network configuration tool.

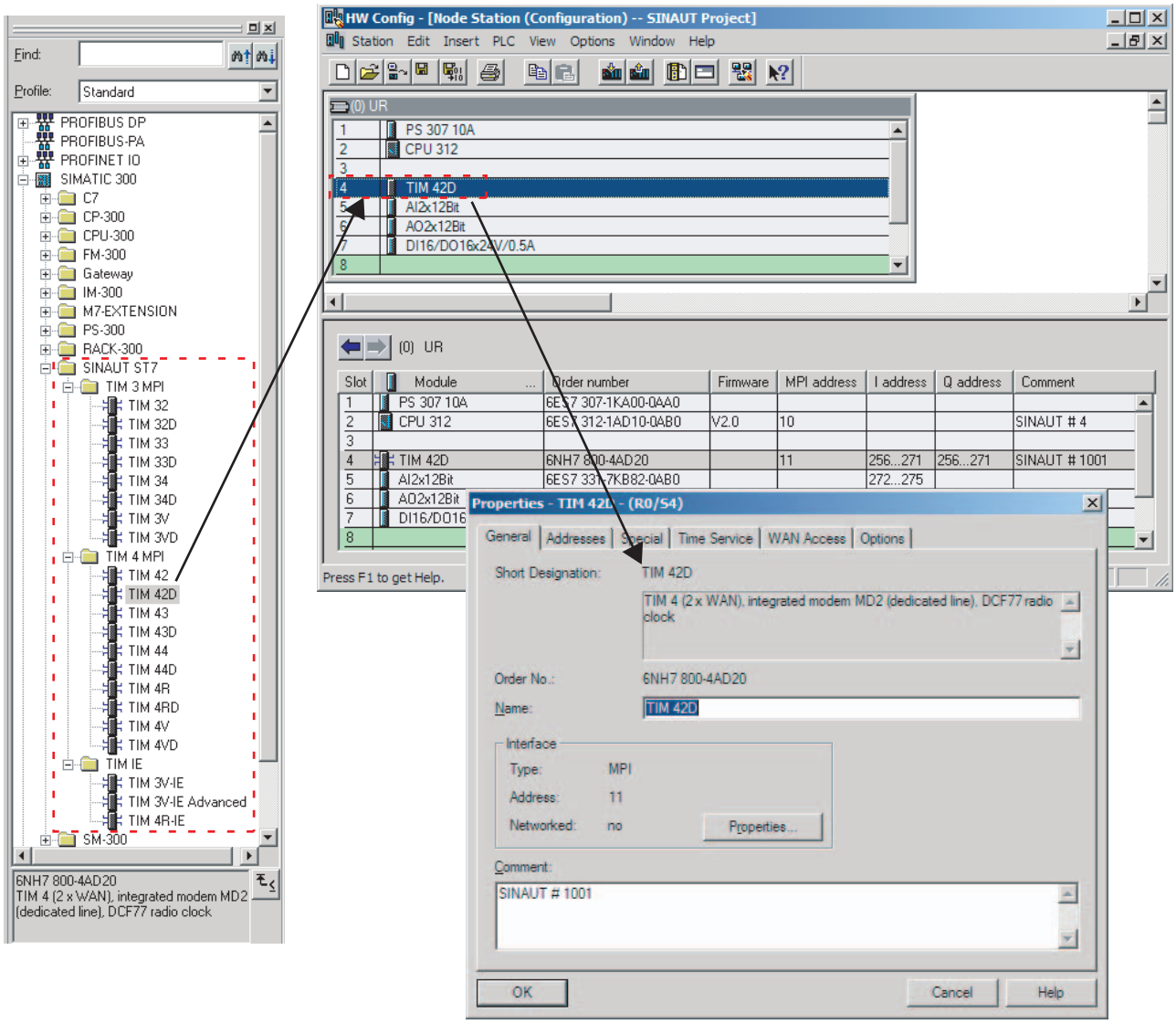

Figure 1-19 Module manager for SINAUT ST7

The WAN manager for SINAUT ST7

The SINAUT WAN manager expands the catalog for the STEP 7 *NetPro* network configuration tool. The SINAUT networks have been added to the *Subnets* directory. You can select the SINAUT networks you require from this directory and install them in the STEP 7 network window.

The TIM modules are interconnected with the networks in the STEP 7 network window using the mouse. Errors in the interconnections are rejected immediately.

A properties dialog can be opened in which you can specify the generally valid parameters for a network, for example, ST7 protocol, transmission speed etc.

In a further dialog, you can specify individual properties for the network nodes, when connecting to a telephone network, for example, the telephone number.

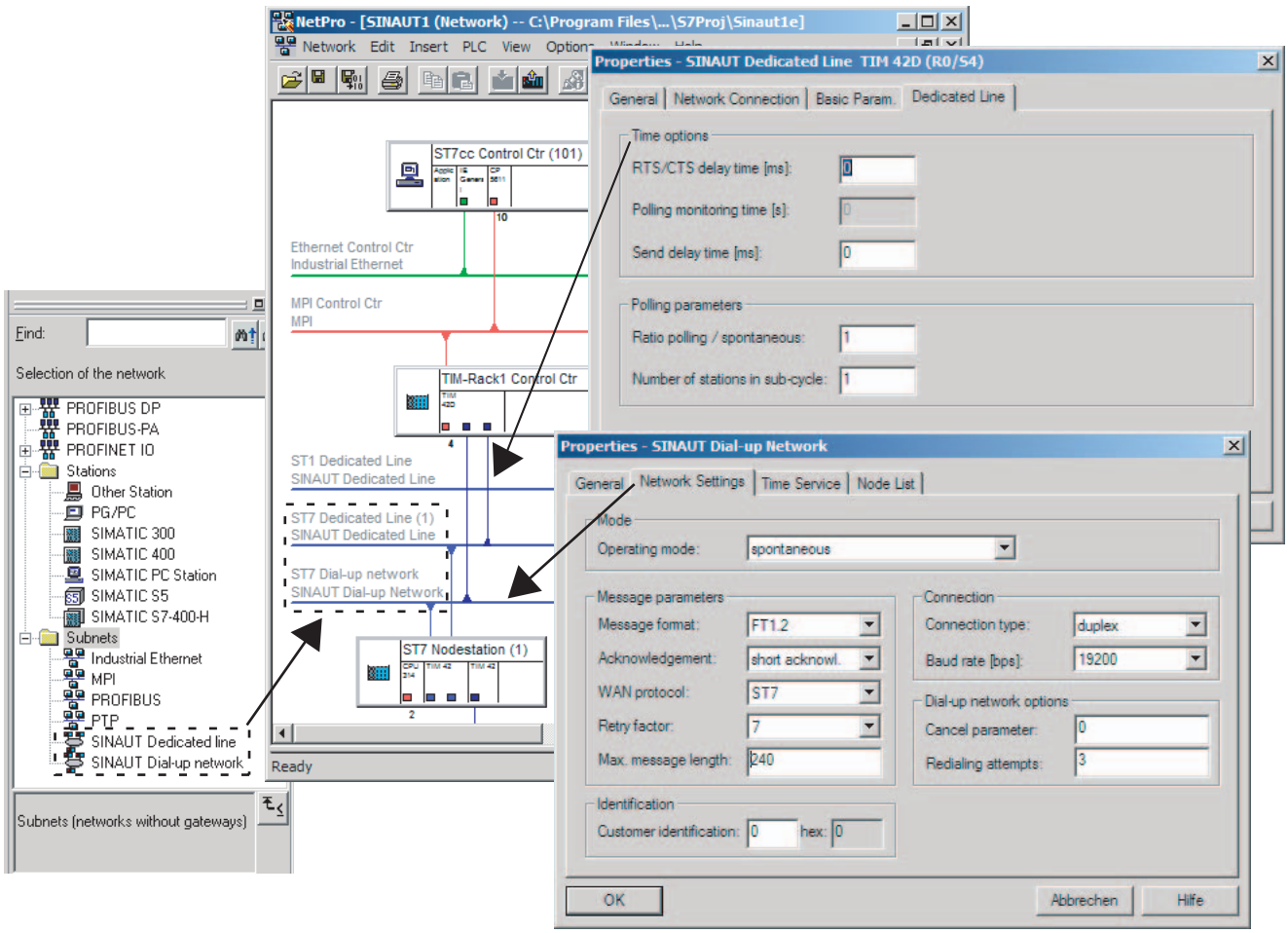

Figure 1-20 The WAN manager for SINAUT ST7

When necessary, the properties dialog of a TIM module can also be opened in *NetPro*. You have the same configuration options as in *HW Config*.

The SINAUT ST7 configuration tool

Unlike the two managers mentioned up to now, the SINAUT ST7 configuration tool does not expand one of the standard STEP 7 tools but is a separate configuration tool embedded in the STEP 7 environment. This allows you to perform the remaining SINAUT-specific configuration tasks. It consists of the following:

- Connection configuration
- Subscriber administration
- SINAUT ST1 - Configuration Overview

The first step is to use the *Connection configuration* tool to specify the SINAUT subscribers (ST7-CPU, ST7cc/ST7sc) between which a connection is necessary. The tool provides you with a selection of all theoretically possible connections in the right-hand pane of the split window. These are determined automatically by the tool based on the network configured with NetPro (see WAN manager). The user then selects the required connections and copies them to the left-hand pane using the context menu.

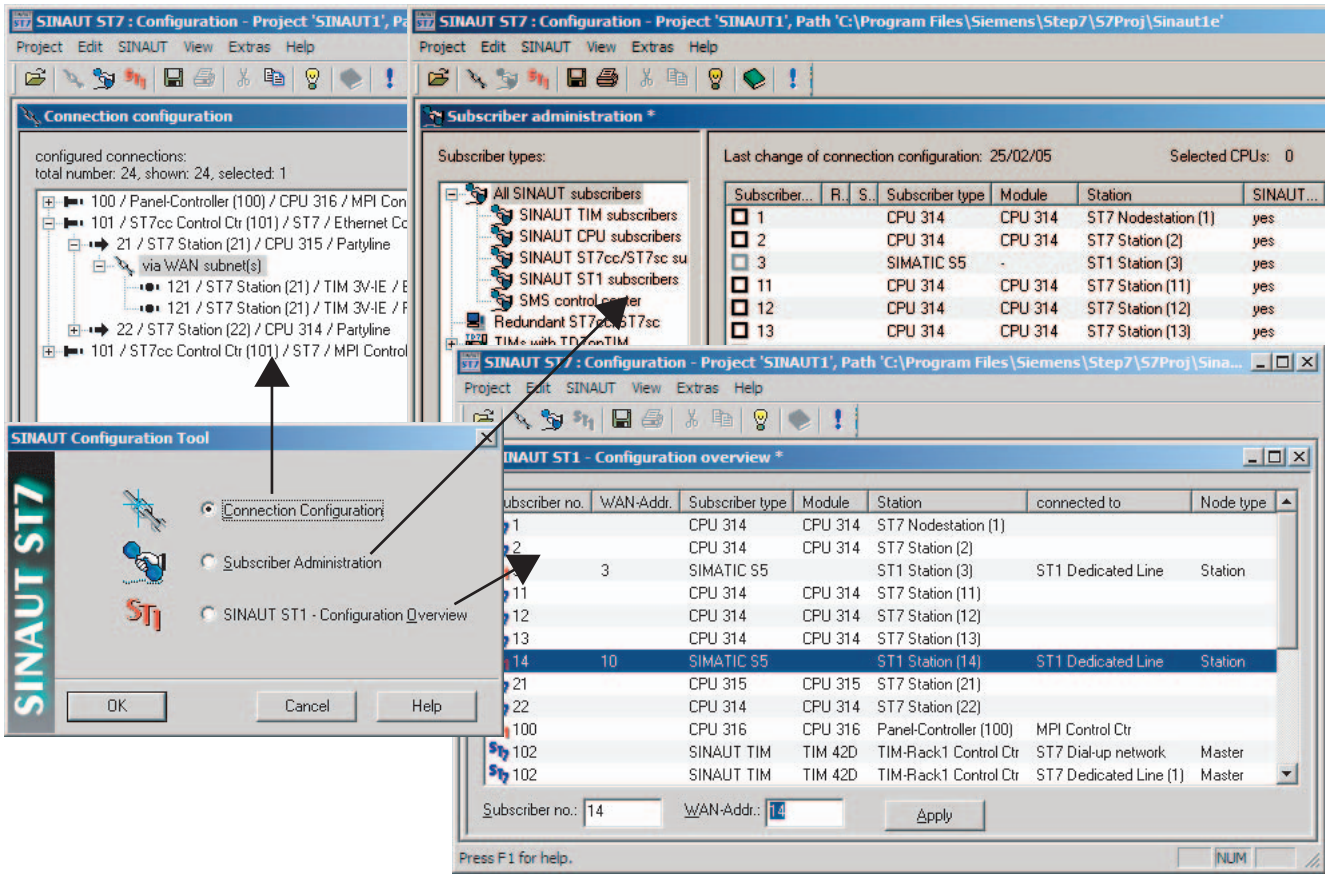

Figure 1-21 The SINAUT ST7 configuration tool

The *Subscriber administration* tool then provides the user with a list of all available SINAUT subscribers. Where necessary, you can make subscriber-specific adaptations, for example, changing the SINAUT subscriber number of the individual devices or the configuration of message texts to be sent as an SMS. Subscriber management also involves the configuration of the data messages to be sent and received if the message generation and evaluation is to be performed by the TIM (only possible for TIMs with TD7onTIM functionality). Based on the configuration data, the tool generates the system data blocks (SDBs) for the CPUs and TIMs. If the SINAUT TD7 software for the CPU is used, the tool also prepares records and communication data blocks for the CPUs and enters them in the block directories of the CPUs along with the blocks (FBs, FCs) required by the individual CPUs for SINAUT communication.

The third tool *SINAUT ST1 - configuration overview* is required only for configuring systems which include SINAUT ST1 devices. This is a convenient utility with which addresses can be synchronized for SINAUT ST1 when necessary.

The following figure illustrates how SMS messages can be configured conveniently in subscriber administration. The configuration results in the automatic generation of data blocks containing texts and the corresponding function blocks that are saved in the block directory on the relevant CPUs.

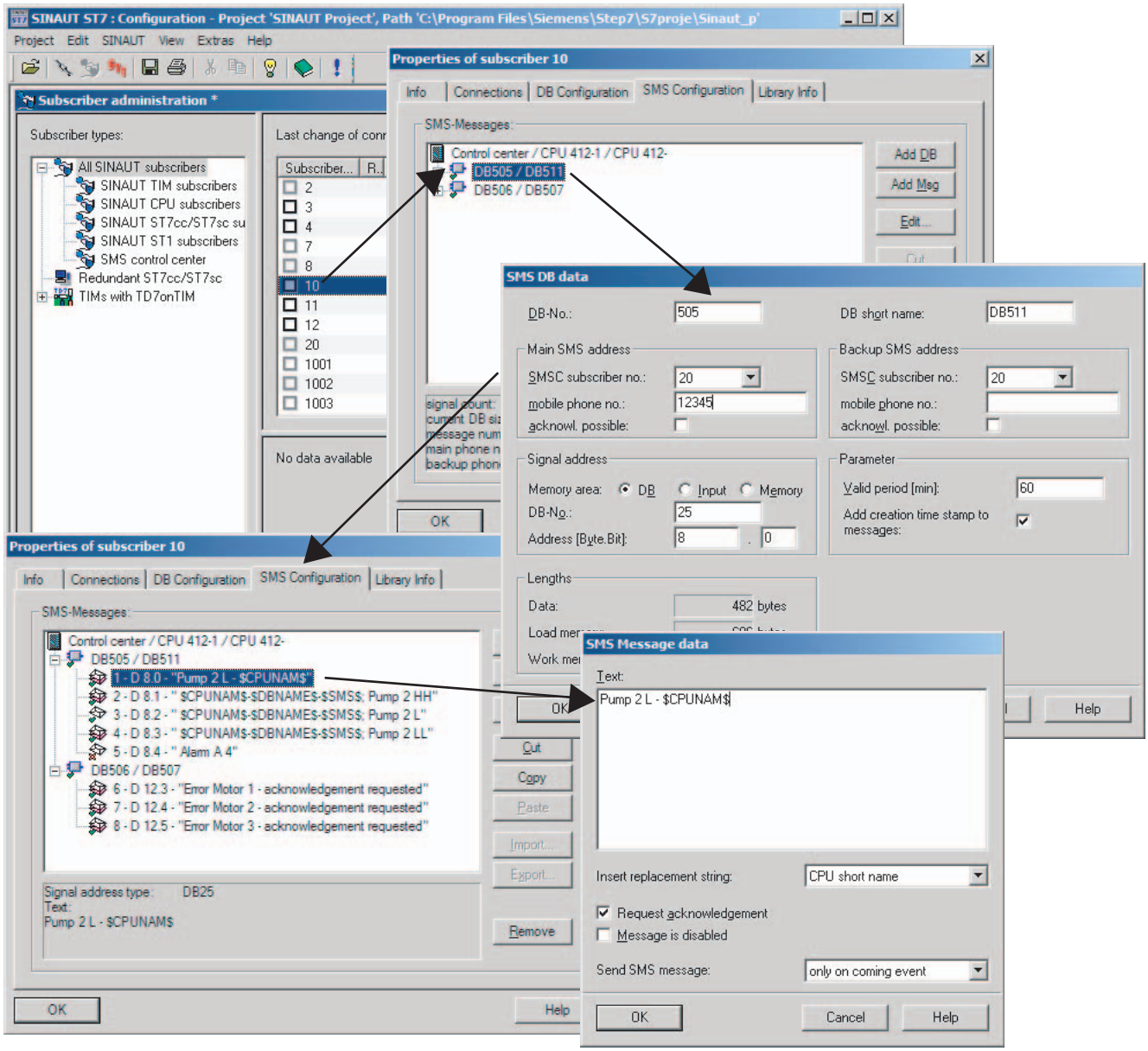

Figure 1-22 Configuring SMS messages

The SINAUT ST7 diagnostics and service tool

In addition to the diagnostic functions familiar from STEP 7, you also have access here to SINAUT-specific diagnostic information. Using the service tool, it is, for example, possible to load new software on a TIM.

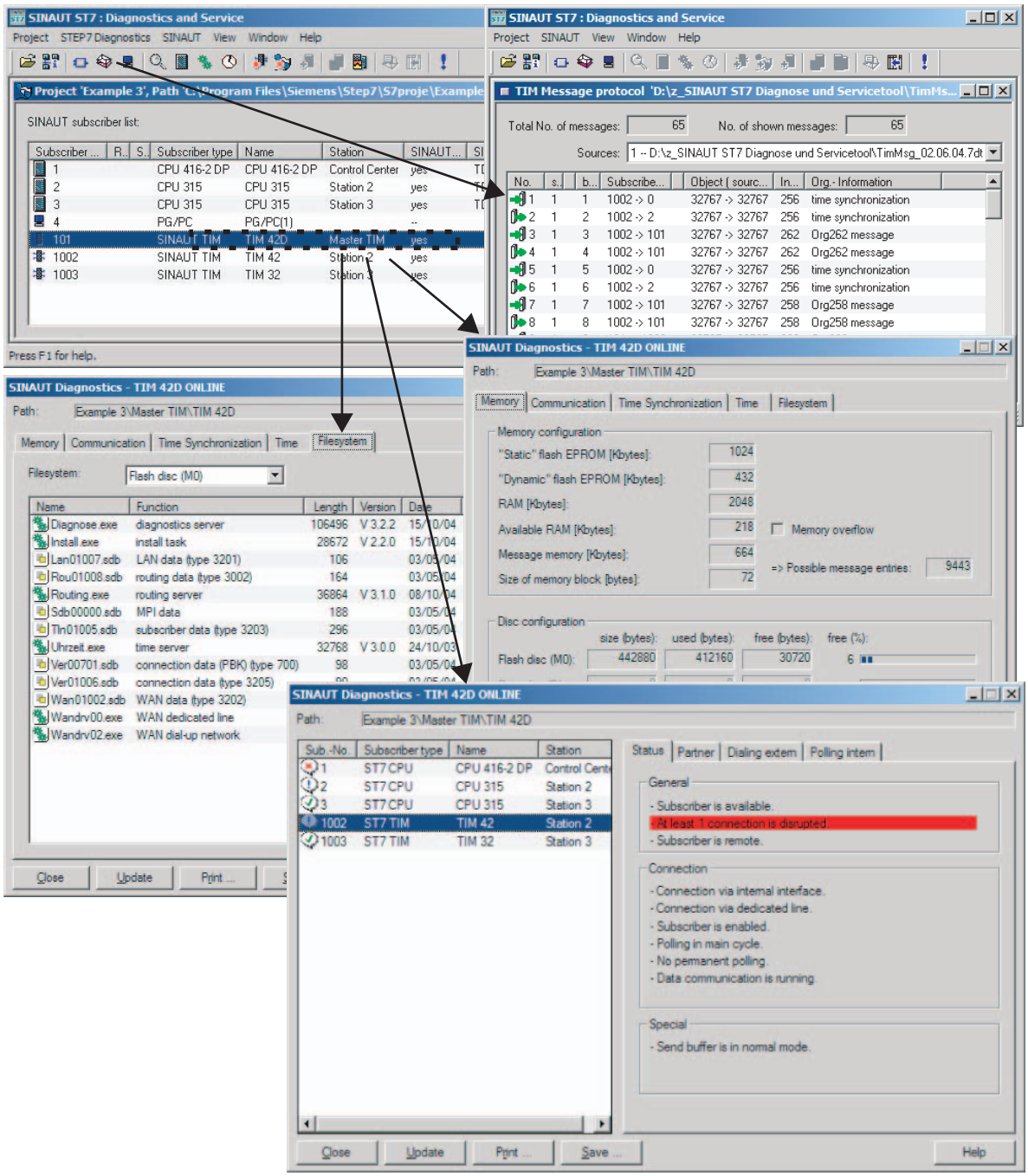

Figure 1-23 Examples of SINAUT ST7 diagnostics

1.9.3 Overview for ordering SINAUT ST7 software

Table 1- 9 Overview for ordering SINAUT ST7 software

Short name	Order no.	Explanation
SW ST7	6NH7997-0CA15-0AA0	Standard software for SINAUT ST7, consisting of SINAUT TD7 library with blocks for the CPU SINAUT ST7 configuration and diagnostic software for the programming device Electronic manual (German/English)
UPGR SW ST7	6NH7997-0CA15-0GA0	ST7 software upgrade package for owners of SINAUT ST7 standard software packages less than V4.0

1.9.4 Installation of the SINAUT ST7 standard software package

The following requirements must be met to install any or all components of the software package:

- Operating system: Windows Server 2003 SP2, Windows XP SP2 or Windows Vista 32 Bit Ultimate and Business
- The installed STEP 7 software must be version 5.4 SP4 or higher.

If the *Autorun* feature is activated on your PC/PG, the SINAUT ST7 setup program starts automatically when you insert the CD. Otherwise, use the Explorer to open the root directory on the CD and click on the *Setup.exe* application.

The setup program checks which components on the CD can be installed and then displays a list from which you can make your selection. Setups are currently available for the following components.

- SINAUT ST7 configuration: Basic version V5.0
- SINAUT TD7 library V2.2

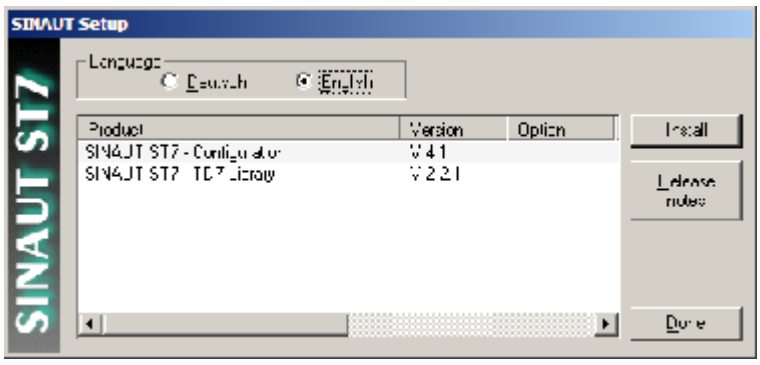

Figure 1-24 Master setup dialog

Select the components you want to install (you can select several packages at once using shift-click) and start the installation by clicking the *Install* button.

Note

To configure SINAUT systems, you must install the two packages *TD7 Library* and *Manager*.

During installation, the setup program will prompt you for any necessary information.

The installation programs perform the following individual operations:

- The programs and data supplied with SINAUT ST7 are copied to the correct locations in the STEP 7 system.
- A new submenu *SINAUT ST7* containing the SINAUT tools is integrated in the *SIMATIC* menu.
- A *SINAUT ST7 Configuration* icon is created on your desktop.

Note

SINAUT ST7 registers in the Microsoft Windows system files. Do not use Microsoft Windows tools such as the Explorer to move or rename SINAUT ST 7 files or folders or to modify STEP 7 data in the Microsoft Windows registry. Following such modifications, your program may no longer functioning correctly.

1.9.5 Uninstalling SINAUT ST7 software packages

Uninstalling scene of software packages must be in conformity with the operating system you are using. Open the Windows Control Panel and select *Add/Remove Programs*.

In the dialog that opens, select *Change or Remove Programs* and select the required SINAUT ST7 component from the list and then select the *Remove* button. Following a prompt for confirmation, the SINAUT ST7 component is then removed from your system.

Note

When the component is uninstalled, the entries made in the *WINSTART.BAT/CONFIG.SYS/ AUTOEXEC.BAT* files by the system are not cleared. Files created dynamically by STEP 7 may also remain on your hard disk after uninstalling a component. This is detected by the uninstall tool and indicated by the message "Some elements could not be removed. You should manually remove items related to the application." However, these dynamically created files do not need to be deleted.

1.10 SINAUT ST7cc, the add-on for WinCC

1.10.1 Area of application

SINAUT ST7cc is the ideal control center system based on SIMATIC WinCC for SINAUT ST7.

It is specially designed for event-driven and time-stamped data transmission in the SINAUT system. It avoids the possible loss of data that can occur with cyclic polling in WinCC. It also ensures the use of the correct event time supplied by the SINAUT stations for all WinCC messages and archive entries. The process image integrated in ST7cc contains all process data as well as the status of all SINAUT subscribers in the network and makes this data available directly to WinCC for fast transfer to the process image.

The ST7cc Config configuration tool provides the user with fully integrated engineering based on the data messages that were configured in the SINAUT stations. Configuration of WinCC including tag management is therefore generated automatically and updated consistently whenever changes occur.

For archives, logs and reports that meet the requirements of ATV H260 or Hirthammer, the additional use of the WinCC add-on ACRON is advisable. ST7cc provides a configurable data interface to these add-ons.

Along with the WinCC redundancy package, a fault-tolerant ST7cc control center can be implemented.

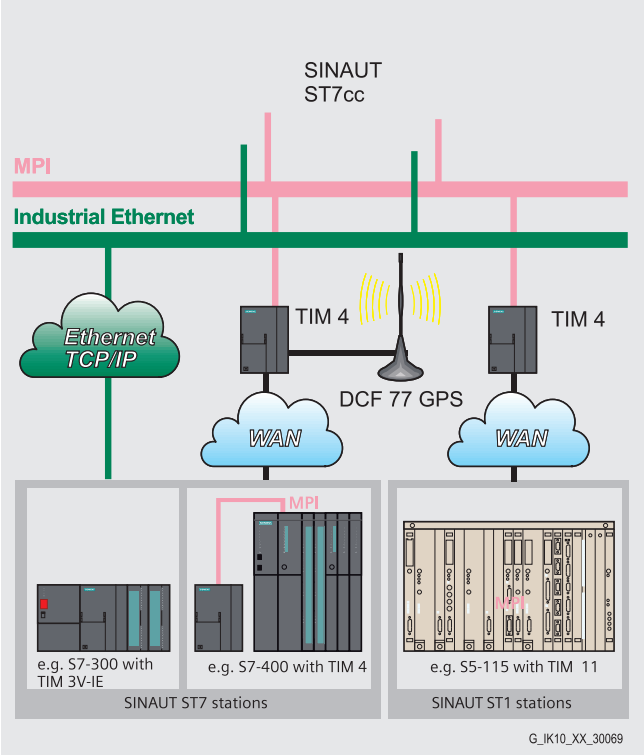

Figure 1-25 SINAUT ST7cc control center system (single or redundant) with attached SINAUT stations

Note

The SINAUT ST7cc for WinCC expansion packet is described in detail in a separate manual. To complete the "Introduction to the SINAUT ST7 system" in this chapter, we will nevertheless briefly outline the properties of the SINAUT ST7cc package.

1.10.2 The special properties of SINAUT ST7cc

Telecontrol master with user-friendly diagnostics

- Direct connection of SINAUT ST7 TIMs to ST7cc over MPI and Ethernet. A separate CPU as telecontrol master is not required.
- Availability of the most important status information of each SINAUT subscriber with visualization in WinCC using provided station typicals (picture typicals and faceplates)
- Option of controlling SINAUT subscribers with these faceplates
- Identification of process values from subscriber stations with a disrupted connection to ST7cc
- General request to affected stations following data transfer problems to allow the process image to be updated in ST7cc
- For diagnostic purposes: Selective recording of message traffic for individual or all SINAUT subscribers. Message visualization and evaluation is the same as with the TIM message monitor.
- Time synchronization by ST7cc for the TIMs connected to the ST7cc PC over Ethernet

Preprocessing of process data

Preprocessing can be configured for binary, analog, and counted values. This takes into account the event time and adds the time stamp of the event time to related messages and archive entries.

- **Binary values**
  - Entry of current binary values in the assigned WinCC tags
  - Entry of related messages into the WinCC message system taking into account the time stamp supplied by SINAUT
- **Analog values** (instantaneous and mean values)
  - Floating-point numbers, integer values
  - Linear raw value scaling (raw value --> physical value)
  - Entry of analog values (with or without linear raw value scaling) in the assigned WinCC tags
  - Entry of analog values (with or without linear raw value scaling) into the WinCC archive taking into account the time stamp supplied by SINAUT

- **Counted values**
  - Overflow handling with absolute counters
  - Counted value scaling using factors
  - Calculation of correctly timed interval quantities
  - Entry of currently accumulating interval quantities in the assigned WinCC tags
  - Entry of completed interval quantities into the WinCC archive taking into account the time stamp supplied by SINAUT
- **Setpoints**
  - Floating-point numbers, integer values
  - Linear raw value scaling (raw value --> physical value) when necessary

Simple, totally integrated project engineering

The configuration of the entire system with ST7ccConfig is very user-friendly. Extra WinCC configuration for the tag management, and the archive and message system is restricted to a few preparations, such as creating message classes and types and archives in WinCC.

1.10.3 System prerequisites

Structure

SINAUT ST7cc is installed on a Windows PC (Windows 2000, XP or Server 2003). WinCC can also run on the same PC. WinCC client/server configurations are also possible in which ST7cc is located on the WinCC server.

Licenses

It is assumed that a license is available for the WinCC full package. This can also be a runtime package if no configuration is necessary on the end computer. For redundant ST7cc, you also require the WinCC redundancy package including license.

The following table shows which software packages are required for the ST7cc single or redundant system.

ST7cc single system	
Number	**Software package**
1	Windows 2000, XP, or Server 2003
1	WinCC full package*
1	SIMATIC NET with license for CP software
1	SW ST7cc S (with a license for six stations) or SW ST7cc M (with license for 12 stations) or SW ST7cc L (with license for > 12 stations)

ST7cc redundant system	
Number	**Software package**
2	Windows 2000, XP, or Server 2003
1	WinCC full package*
1	WinCC runtime package
1	WinCC redundancy package (with two licenses)
1	SIMATIC NET with license for CP software
1	ST7cc redundancy package (with two licenses)
2	SW ST7cc S (with a license for six stations) or SW ST7cc M (with license for 12 stations) or SW ST7cc L (with license for > 12 stations)

*) This can also be a runtime package if no configuration is necessary on the end computer.

Connecting SINAUT stations

One or more SINAUT ST7 TIM communications processors are connected either over the MPI S7 standard bus or Ethernet.

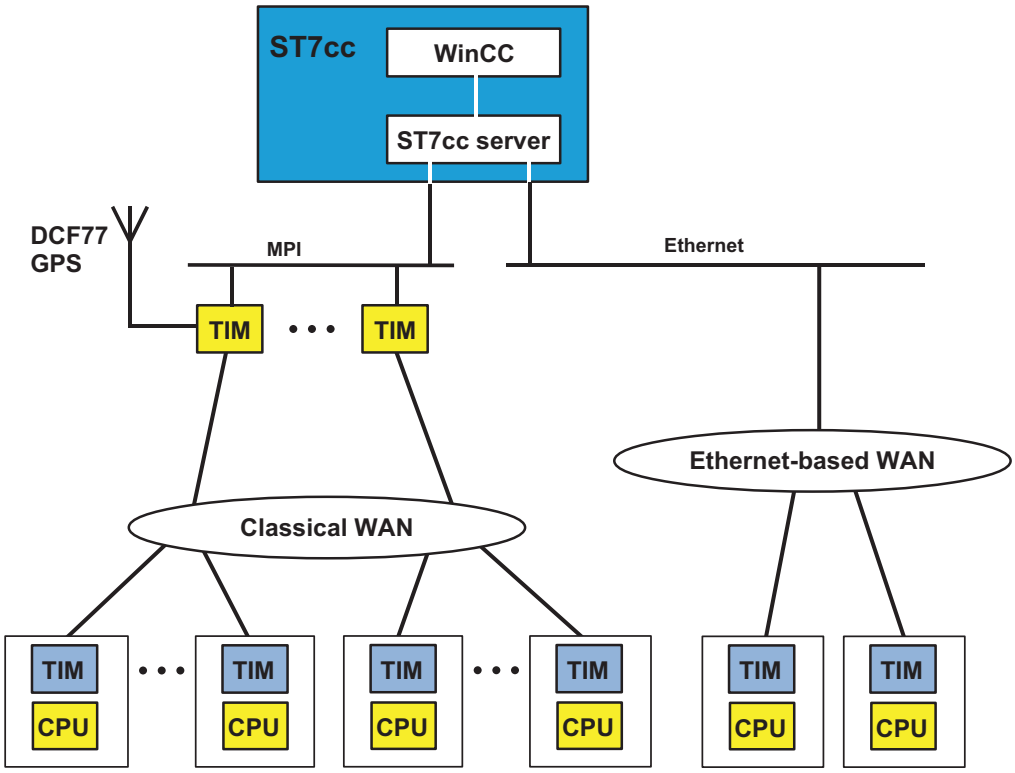

Figure 1-26 Connecting ST7 stations over the MPI bus or Ethernet

When supplying the current time of day, the following situations must be distinguished:

- For TIMs (TIM 4x), connected to the ST7cc PC over MPI, time synchronization is possible only with a TIM equipped with a DCF77 receiver. This then serves as the central time synchronization source for the ST7cc PC and all other TIMs connected to MPI. These, in turn, synchronize their stations connected over the WAN.
- For TIMs (TIM 3V-IE) connected directly to the ST7cc PC over IP-based WAN, the time is synchronized by ST7cc.

A GPS receiver is recommended outside the reception range of the DCF77 time transmitter; this can determine the local time from the satellite-based GPS system (Global Positioning System).

1.10.4 Ordering data for SINAUT ST7cc

Table 1- 10 Ordering data for SINAUT ST7cc

Short name	Order no.	Explanation
SINAUT ST7cc		SINAUT ST7cc Software for connecting SINAUT stations to WinCC (Windows 2000 / XP / Server 2003); single license for one installation of the runtime software; Runtime software, configuration software, and electronic manual on CD-ROM; license key on diskette; German/English
SINAUT ST7cc S	6NH7 997-7CA15-0AA1	Small license for a maximum of 6 SINAUT stations
SINAUT ST7cc M	6NH7 997-7CA15-0AA2	Medium license for a maximum of 12 SINAUT stations
SINAUT ST7cc L	6NH7 997-7CA15-0AA3	Large license for more than 12 SINAUT stations
SINAUT ST7cc R	6NH7 997-8CA15-0AA0	Redundancy license for ST7cc (contains 2 licenses); 2 individual licenses ST7cc S, M or L are also required.
SINAUT ST7cc SM	6NH7 997-7AA00-0AD2	License upgrade from ST7cc S to ST7cc M (from 6 to 12 stations)
SINAUT ST7cc SL	6NH7 997-7AA00-0AD3	License upgrade from ST7cc S to ST7cc L (from 6 to more than 12 stations)
SINAUT ST7cc ML	6NH7 997-7AA00-0AE3	License upgrade from ST7cc M to ST7cc L (from 12 to more than 12 stations)
MANUAL ST7cc D	6NH7 998-7AA11	SINAUT ST7cc manual on paper, German
MANUAL ST7cc E	6NH7 998-7AA21	SINAUT ST7cc manual on paper, English

1.10.5 Technical specifications of SINAUT ST7cc

SINAUT ST7cc	
Operating systems	Windows XP Prof. SP1, SP2, Windows 2000 Prof. SP1, 2, 3, 4 Windows Server 2003 Standard Edition + SP1
WinCC versions	WinCC V5.0 SP2 or higher WinCC V5.1 SP1 or higher WinCC V6.0 SP1 or higher WinCC V6.0 SP2 HF5 or higher WinCC V6.0 SP3 HF2 or higher WinCC V6.0 SP4 or higher
STEP 7/NCM versions	SIMATIC NCM PC/S7 V5.3 SP2 or SIMATIC STEP 7 V5.3 SP1
SIMATIC NET PC software versions	SIMATIC NET PC software V6.2; SIMATIC NET PC software V 6.3
Configuration	
• ST7cc	• ST7cc Config Tool V2.5
• SINAUT system	• SINAUT ST7 configuration software V3.5; SINAUT ST7 configuration software V3.6
Configuration limits	
• 6 SINAUT stations	• Small license
• 12 SINAUT stations	• Medium license
• For more than 12 SINAUT stations	• Large license

1.11 SINAUT ST7sc SCADA Connect software

The SINAUT system allows the networking of SIMATIC stations with a control center over a classic or IP-based WAN (Wide Area Network). This control center can also be a SIMATIC station or a PC-based control center, for example, WinCC with the SINAUT ST7cc add-on.

SINAUT ST7sc allows the manufacturers of control systems to connect to SINAUT without needing to integrate a SINAUT interface. Communication is over OPC: As an OPC server, SINAUT ST7sc forms the interface between the SINAUT system and a control system connected as an OPC client.

The OPC interface is also suitable for data exchange with other applications, for example, the Microsoft Office application Excel.

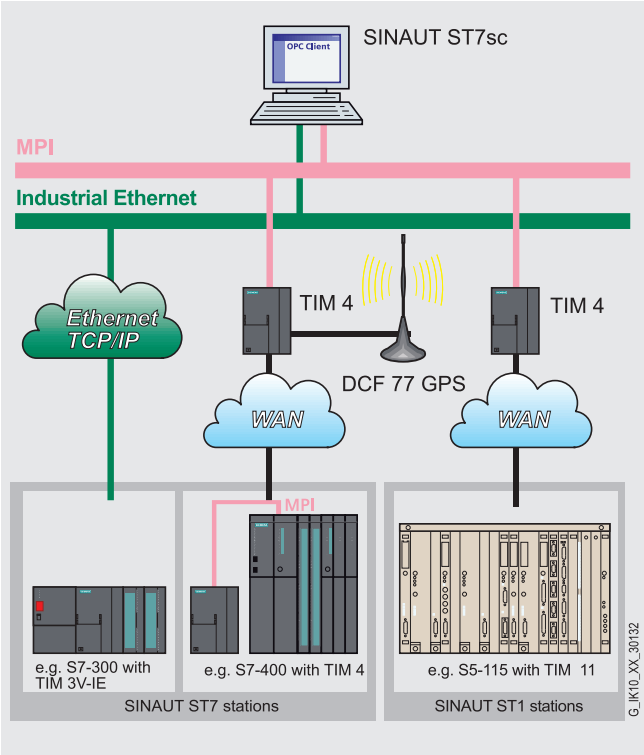

Figure 1-27 Control center system and SINAUT ST7sc with attached SINAUT stations

1.11.1 The special properties of SINAUT ST7sc

Acquiring process data

The SINAUT station acquires the process data when it changes and transfers this to SINAUT ST7sc over the WAN. Here, the received SINAUT messages are decoded and stored in the ST7sc variable management as specified in the configuration An OPC client can read this received data from the ST7sc variable management over the "Data Access" OPC server interface. This reading is either synchronous or asynchronous (recommended); in other words, the OPC server interface transfers data only when there have been changes in the ST7sc variable management.

In the other direction, the OPC client can write data to be sent to a station (for example, commands, setpoints, parameters) over the OPC server interface to the ST7sc variable management. This is converted into SINAUT data messages and sent over the WAN to the SINAUT station specified in the configuration.

Item buffering technique

One special feature of the SINAUT system is that process data is protected from loss. If, for example, the connection between the station and the control center breaks down, the station stores all the data changes acquired during the breakdown locally along with a time stamp. This means that connections can break down for several hours or even several days without loss of data. To make sure that the data stored on the stations arrives safely at the OPC client later, ST7sc includes the "item buffering" technique that helps to avoid data loss on the way to the OPC client, as follows:

- When the OPC "Data Access" interface that represents a process image is updated by the SINAUT stations more quickly than the client can read it.
- When the OPC client is not available for brief or even longer periods or when OPC communication breaks down.

While ST7sc normally creates only one "memory cell" per item and this always contains the last state of the value of the item, when the item buffering technique is selected, a buffer is created per item in which all changes of the relevant item are stored in chronological order with their time stamps. These changes are stored until the individual changes have been transferred to the OPC client.

The Item buffering technique is only possible with an HMI application that can process time-stamped data even when the time stamp is several days old, for example after a long connection breakdown.

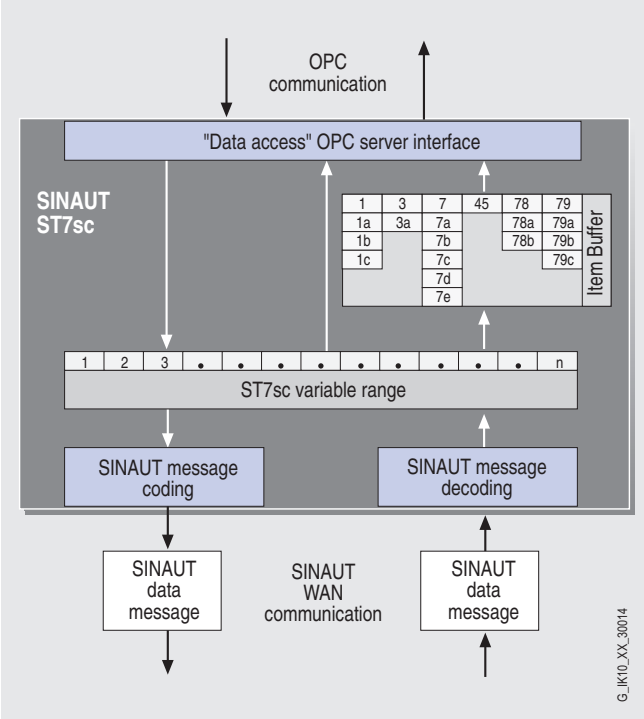

Figure 1-28 System configuration with SINAUT ST7sc

Redundant application

SINAUT ST7sc allows attachment to a redundant client system. In this case, two ST7sc systems are necessary. The data received from the stations is transferred parallel and independently to both clients and data intended for the stations is received from these clients.

The redundancy "intelligence" is a feature of the client:

- It ensures correct evaluation and synchronization of the simultaneously transferred data.
- It transfers data intended for the stations only once to one of the two ST7sc systems so that duplicate transfer is not necessary.

Configuration

ST7sc is configured with the ST7sc Config tool supplied on the ST7sc software CD.

The documentation on ST7sc and the Config tool is also on this CD.

1.11.2 System prerequisites

Structure

SINAUT ST7sc is installed on a Windows PC (Windows 2000 or XP). The OPC server function allows connection of one or more client applications. These clients are either connected to the server over a suitable communication medium, for example Ethernet, or they are installed on the same PC as SINAUT ST7sc.

Connecting SINAUT stations

One or more SINAUT ST7 TIM communications processors are connected either over the MPI S7 standard bus or Ethernet.

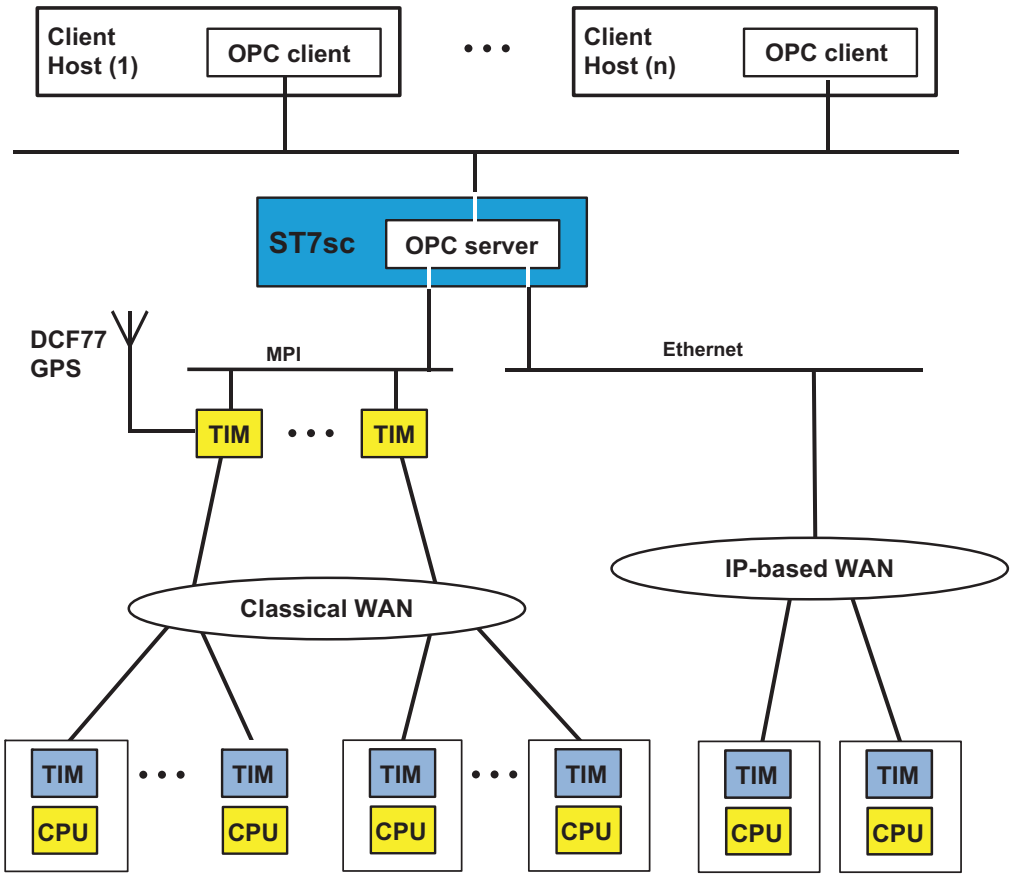

Figure 1-29 Connecting SINAUT stations over the MPI bus and Ethernet

When supplying the current time of day, the following situations must be distinguished:

- For TIMs (TIM 4x), connected to the ST7sc PC over MPI, time synchronization is possible only with a TIM equipped with a DCF77 receiver. This then serves as the central time synchronization source for the ST7sc PC and all other TIMs connected to MPI. These, in turn, synchronize their stations connected over the WAN.
- For TIMs (TIM 3V-IE) connected directly to the ST7sc PC over IP-based WAN, the time is synchronized by ST7sc.

A GPS receiver is recommended outside the reception range of the DCF77 time transmitter; this can determine the local time from the satellite-based GPS system (Global Positioning System).

1.11.3 Ordering data for SINAUT ST7sc

Table 1- 11 Ordering data for SINAUT ST7sc

Short name	Order no.	Explanation
SINAUT ST7sc		Software for connecting SINAUT stations to HMI, SCADA and Office applications over OPC; single license for one installation of the runtime software; Runtime software, configuration software, and electronic manual on CD-ROM; license key on diskette; German/English
SINAUT ST7sc S	6NH7997-5CA05-0AA1	Small license for a maximum of 6 SINAUT stations
SINAUT ST7sc M	6NH7997-5CA05-0AA2	Medium license for a maximum of 12 SINAUT stations
SINAUT ST7sc L	6NH7997-5CA05-0AA3	Large license for more than 12 SINAUT stations
SINAUT ST7sc SM	6NH7997-5AA00-0AD2	License upgrade from ST7sc S to ST7sc M (from 6 to 12 stations)
SINAUT ST7sc SL	6NH7997-5AA00-0AD3	License upgrade from ST7sc S to ST7sc L (from 6 to more than 12 stations)
SINAUT ST7sc ML	6NH7997-5AA00-0AE3	License upgrade from ST7sc M to ST7sc L (from 12 to more than 12 stations)
MANUAL ST7sc D	6NH7998-5AA11	SINAUT ST7sc manual on paper, German
MANUAL ST7sc E	6NH7998-5AA21	SINAUT ST7sc manual on paper, English

1.11.4 Technical specifications of SINAUT ST7sc

SINAUT ST7sc	
Programming	Open and standardized; OPC interface "Data Access Interface V2.05"; Synchronous (IOPCSyncIO) and asynchronous (IOPCAsyncIO2) reading and writing of variables over the standard interface; The access to variables of the item buffer uses asynchronous reads
Protocols	DCOM protocol
Operating systems	Windows XP Prof. SP1, SP2; Windows 2000 Prof. SP1, 2, 3, 4
STEP 7/NCM versions	SIMATIC NCM PC/S7 V5.3 SP2 or SIMATIC STEP 7 V5.3 SP1
SIMATIC NET PC software versions	SIMATIC NET PC software V6.2; SIMATIC NET PC software V 6.3
Configuration	ST7sc Config tool
Configuration limits	
• 6 SINAUT stations	• Small license
• 12 SINAUT stations	• Medium license
• More than 12 SINAUT stations	• Large license

Network structures and topologies 2

The following overview shows you the network structures that can be implemented with SINAUT ST7 in a WAN and on Industrial Ethernet. For each network configuration, you will also see the protocols and modes with which SINAUT can handle communication over the network.

2.1 Overview of the possible network types

With SINAUT ST7, complete hierarchical control networks consisting of stations, node stations and master station can be set up over a WAN (Wide Area Network).
The following WAN types can be used to exchange information between the devices:

IP-based WAN

SINAUT communication is possible between station and control center and between stations over IP-based WANs:

- Over public networks and Internet with DSL or GPRS
- Over wireless by using special wireless devices optimized for Ethernet, for example, SCALANCE W
- Over fiber-optic cable
  - For example by using SCALANCE X switches with optical ports; this allows distances of up to 120 km to be covered,

    or also
  - in conjunction with transmission systems such as PCM30 or OTN

Classic WAN

The following classic WANs can be used for data transmission:

- Dedicated lines, private or leased copper or fiber-optic cable
- Private wireless networks (optionally with time slots)
- Analog telephone network
- Digital ISDN network
- Mobile wireless network GSM

2.2 Configurations

The symbols used in the following configurations represent the various modules with their LAN or WAN interfaces.

Note

Notes on TIM 4 / TIM 4R-IE

- The two WAN interfaces of a TIM 4R / TIM 4RD can both have the same function (for example 2 x master) or different functions (for example node + master).
- With redundant WAN connections, a TIM 4 or TIM 4R-IE with two interfaces must always be used because redundant paths always start and end on a TIM module.

2.2.1 Configurations with IP-based WAN

IP-based network, linking via switches

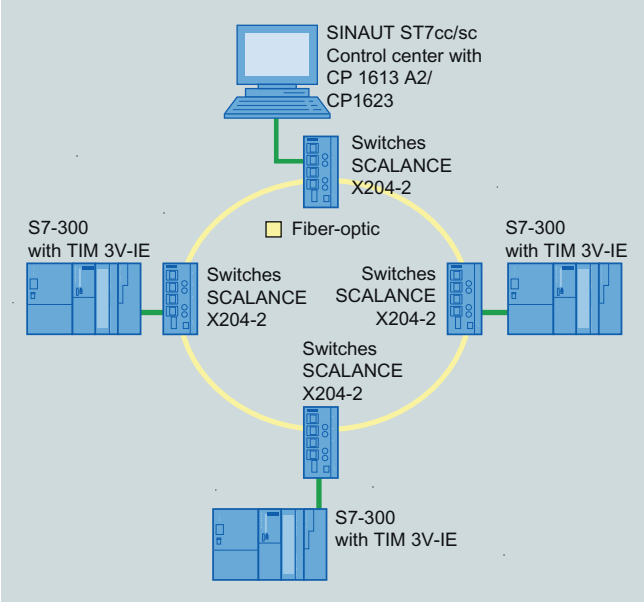

Figure 2-1 IP-based network, linking via switches

Wireless Ethernet communication

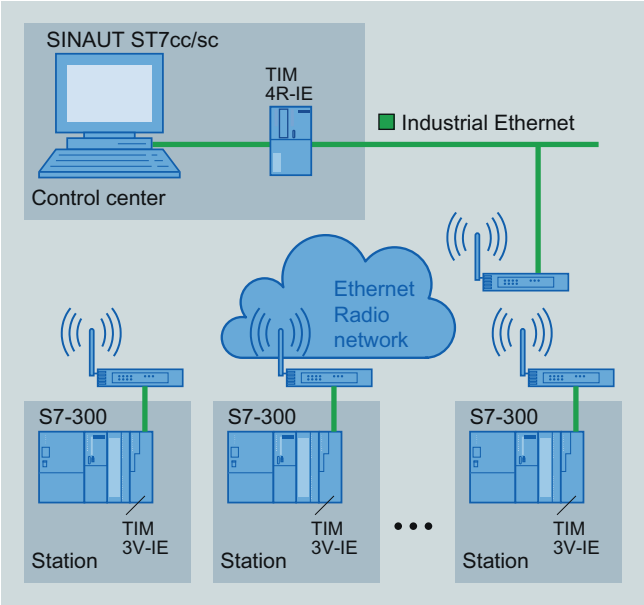

Figure 2-2 Wireless Ethernet communication

Wireless Ethernet communication with TIM 3V-IE in master stations and stations

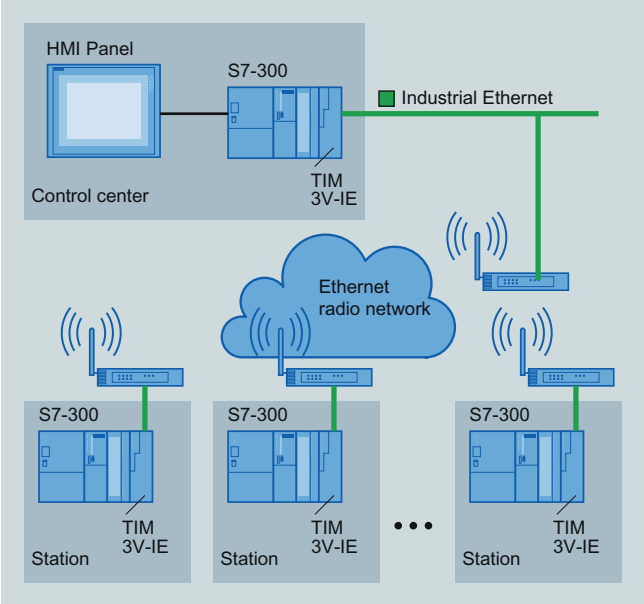

Figure 2-3 Wireless Ethernet communication with TIM 3V-IE in master stations and stations

IP-based communication via DSL

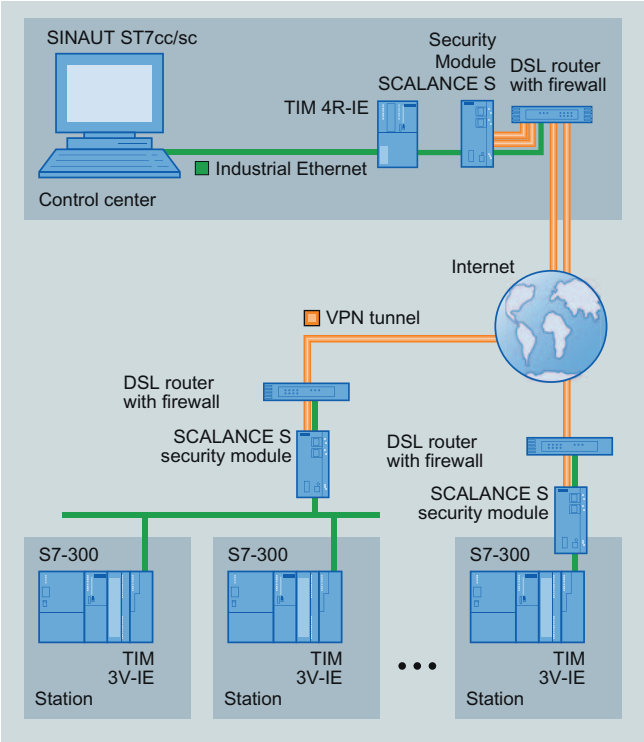

Figure 2-4 IP-based communication via DSL

IP-based communication via GPRS with simple security (simple Internet communication)

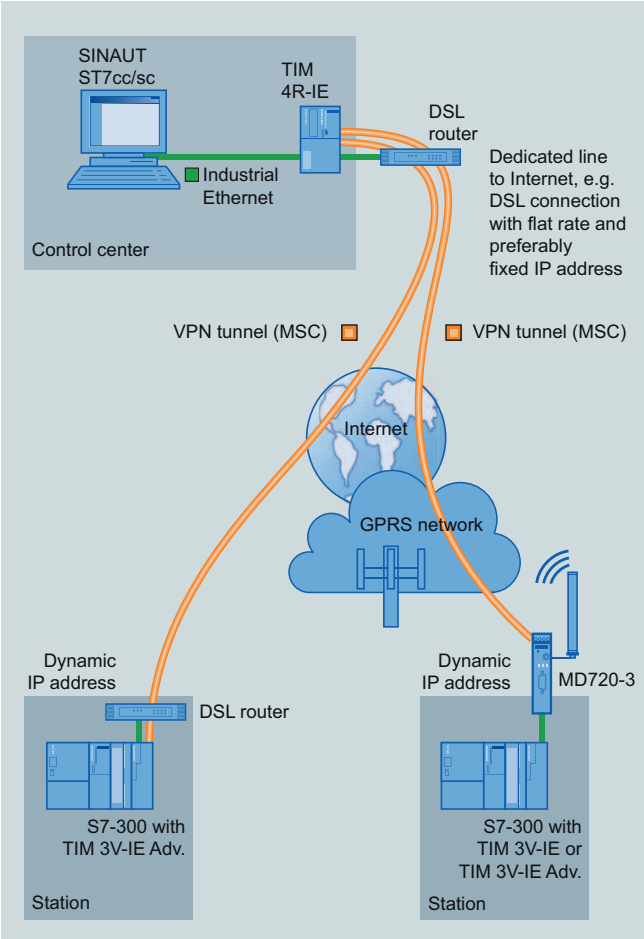

Figure 2-5 IP-based communication (GPRS/DSL) with MSC protocol via MD720-3 modem

IP-based communication via GPRS with higher security

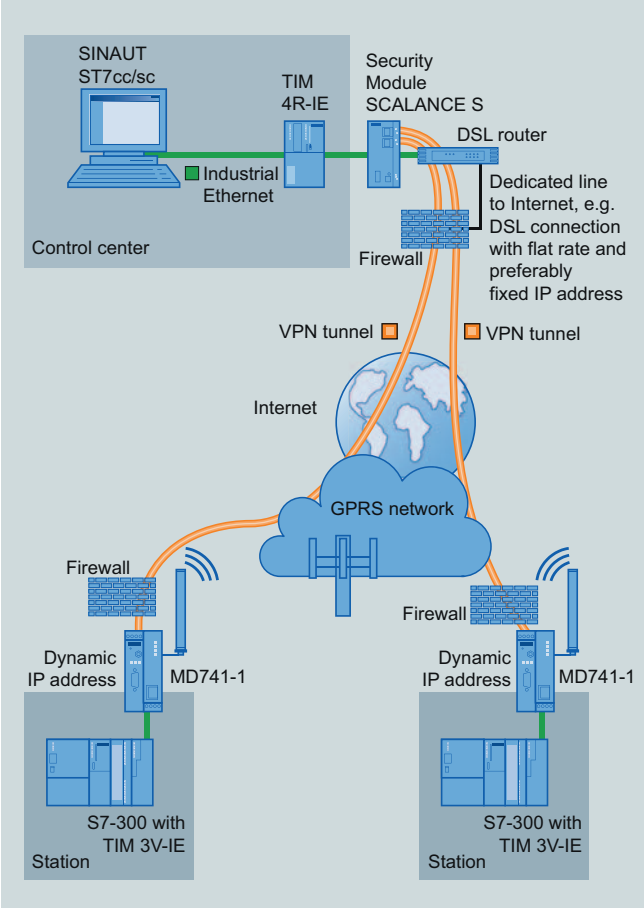

Figure 2-6 GPRS with higher security via MD741-1 router

2.2.2 Configurations with classic WAN

Dedicated line configurations

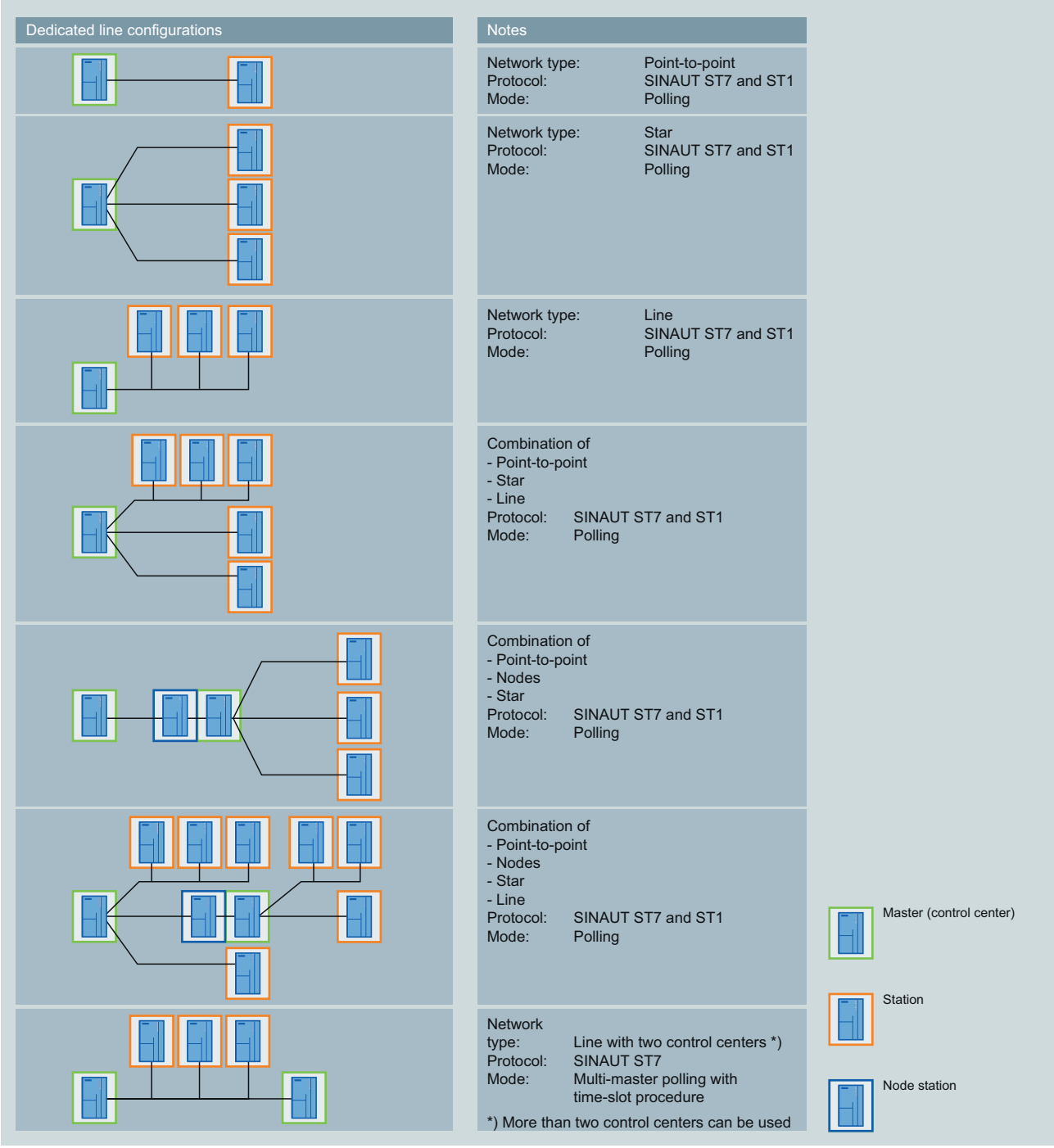

Figure 2-7 Dedicated line configurations

Radio network configuration

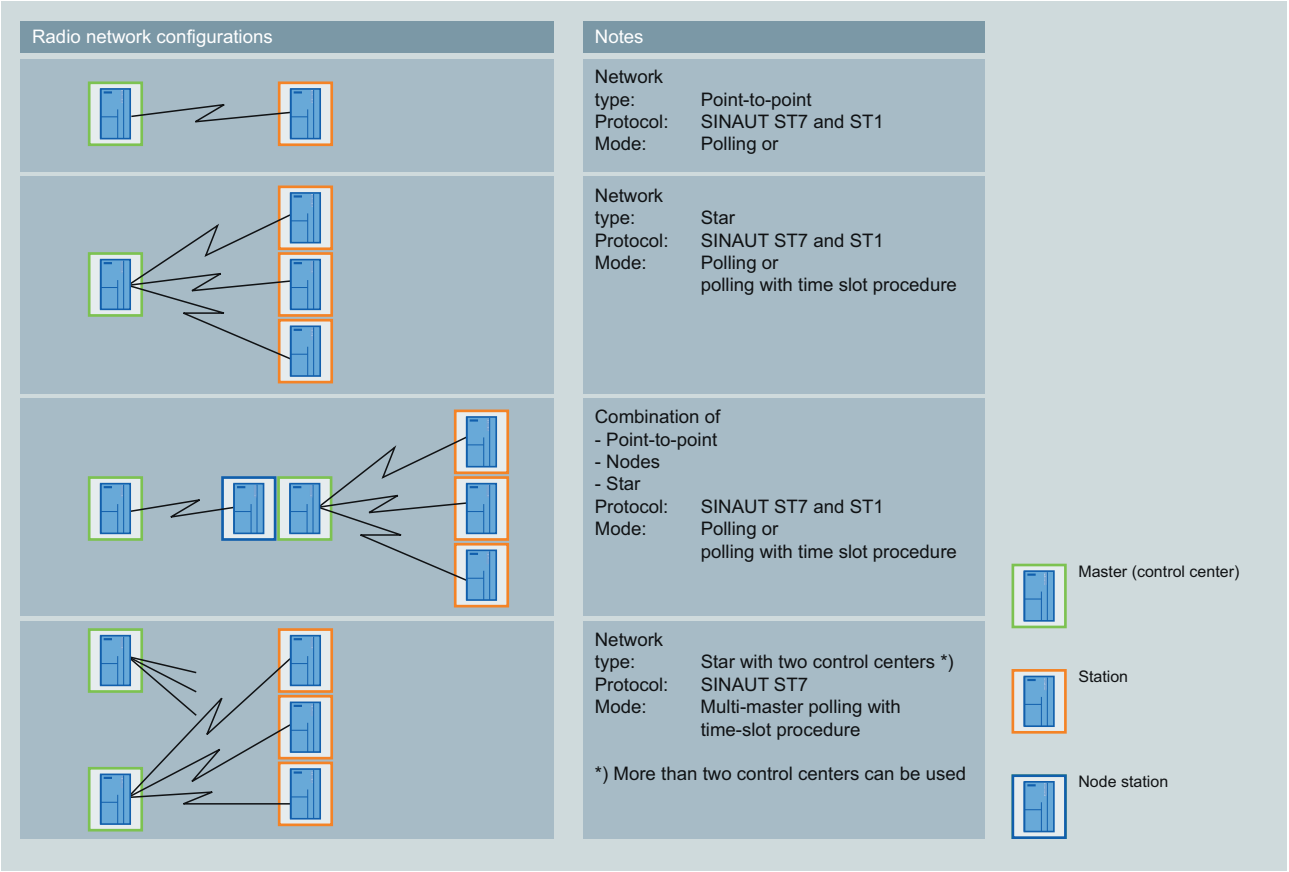

Figure 2-8 Radio network configurations

Dial-up network configuration

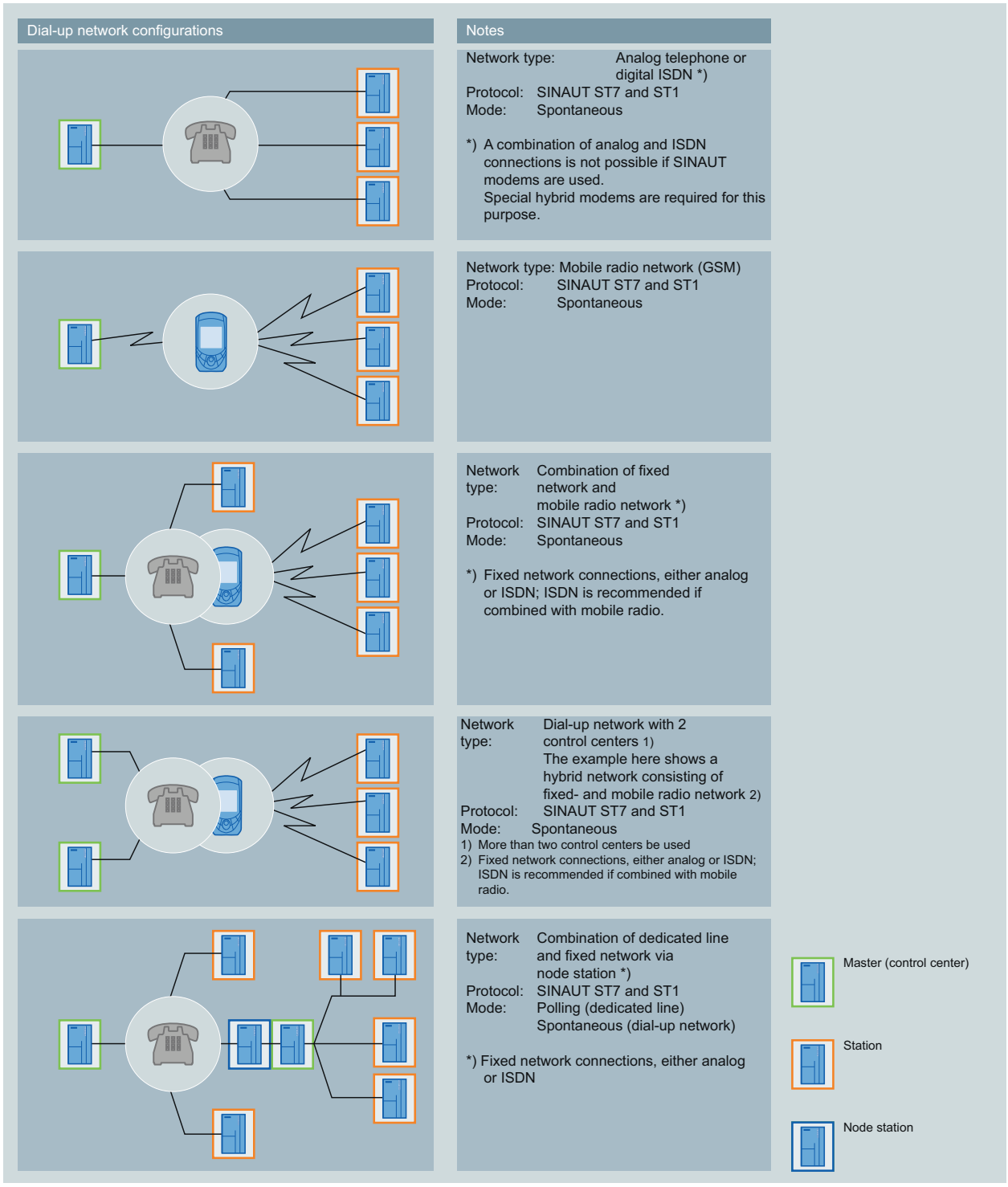

Figure 2-9 Dial-up network configurations

Examples of redundant configurations

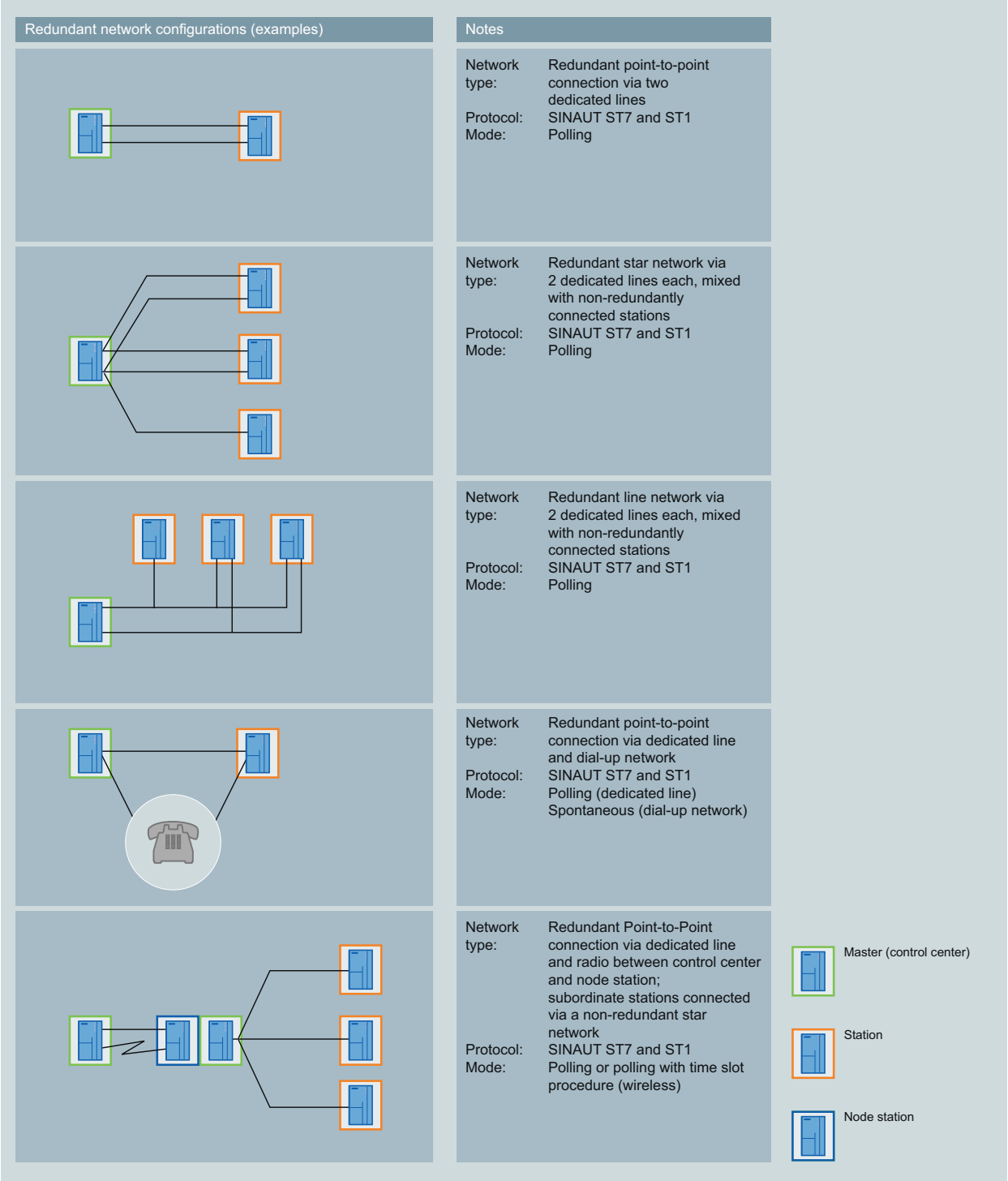

Figure 2-10 Redundant configurations

For further options for setting up redundant transmission paths, refer to section Installing the TIM 4R-IE in an S7-300 (Page 108).

Installation guide 3

NOTICE
Keep to the installation guide of the SIMATIC S7-300 Modules must be installed according to the installation guidelines of SIMATIC S7-300. You will find information on installation and wiring up in the Operating Instructions "SIMATIC S7-300, CPU 31xC and CPU 31x: Installation": You will find the operating instructions on the Internet, see also the references in the Appendix.

3.1 Horizontal and vertical installation

Horizontal and vertical installation

You can operate the SINAUT ST7 components both in horizontally and in vertically installed racks.

Permitted ambient temperature

The SINAUT ST7 components can be operated in the same temperature range specified for the S7-300.

Table 3- 1 Permitted ambient temperatures for the SINAUT TIM modules

Installation position	Permitted ambient temperature (operation)
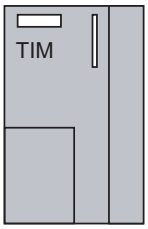 Horizontally installed rack	0 to 60 °C
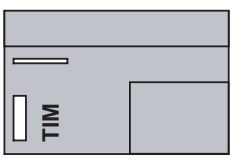 Vertically installed rack	0 to 40 °C

3.2 Dimensions for installation of the SINAUT ST7 components

Introduction

This section contains information on the dimensions for installing SINAUT ST7 components. You will require this information when planning the mechanical layout of a SINAUT ST7 system.

Dimensions for installation of the components

Table 3- 2 Dimensions for installation of the SINAUT ST7 components

Module	Module width	Module height	Max. depth	Installation on
Communications module TIM 3V-IE and TIM 3V-IE Advanced	40 mm	125 mm	120 mm or 150 mm with open front panel	S7 rail
Communications module TIM 4R-IE and TIM 4	80 mm	125 mm	120 mm or 180 mm with open front panel	S7 rail
Modem module MD2, MD3 and MD4	80 mm	125 mm	120 mm or 180 mm with open front panel	S7 rail
GSM modem MD720-3	22.5 mm	99 mm	120 mm or 140 mm with open front panel	DIN rail 35 mm
GPRS router MD741-1	45 mm	99 mm	120 mm or 160 mm with open front panel	DIN rail 35 mm

3.3 Current consumption and power loss of the SINAUT ST7 components

Introduction

The SINAUT ST7 components obtain the current required for operation from an external power supply. If the communications module TIM 4 or a TIM 3V-IE variant is installed in an S7-300, it also draws current over the S7-300 backplane bus.

You require the information on current consumption of the SINAUT ST7 components from the external load power supply and from the backplane bus, for example, to configure the cabinet for a SINAUT ST7 station control device.

Current consumption and power loss

The following table lists the current consumption and power loss of the SINAUT ST7 TIM and modem components.

Table 3- 3 Current consumption and power loss of the SINAUT ST7 TIM and modem components

Short module name	Module order no.	Current consumption from backplane bus (max.)	Current consumption from 24 V load power supply	Power loss (nominal)
TIM 3V-IE	6NH7 800-3BA00	200 mA	160 mA	5.8 W
TIM 3V-IE Advanced	6NH7 800-3CA00	200 mA	160 mA	5.8 W
TIM 4R-IE	6NH7 800-4BA00	200 mA	170 mA	4.6 W
TIM 4R	6NH7 800-4AA90	60 mA *)	500 mA	12.3 W
TIM 4RD	6NH7 800-4AD90	60 mA *)	500 mA	12.3 W
MD2	6NH7 810-0AA20	-	100 mA	2.4 W
MD3	6NH7 810-0AA30	-	200 mA	4.8 W
MD4	6NH7 810-0AA40	-	100 mA	2.4 W
MD741-1	6NH9 741-1AA00	-	137...182 mA ***)	4 W
MD720-3	6NH9 720-3AA00	-	50 / 140 mA **)	5 W

*) only when the TIM module is installed as a CP in an S7-300 rack

**) lower value: Receive mode/ higher value: Send mode

***) depending on the mode, see System manual MD741-1

Example

An S7-300 is configured with the following modules:

- 1 power supply PS 307; 2 A
- 1 CPU 314
- 2 digital input modules SM 321; DI 16 x DC 24 V
- 1 relay module SM 322; DO 8 x AC 230 V/5 A
- 1 analog input module SM 331; AI 8 x 12 bits
- 1 analog output module SM 332; AO 2 x 12 bits
- 1 communications module TIM 4R
- 1 modem MD3

Calculation of the current and power loss balance

The following table contains the power consumption and loss balance for the S7- 300 configuration described above. This current consumption and power loss balance does not include any actuators connected to the outputs.

Table 3- 4 Current consumption and power loss balance

Module	Current consumption from S7-300 backplane bus	Current consumption from 24 V load power supply	Power loss
Power supply PS 307; 2 A	-	-	10 W
CPU 314	-	700 mA	8 W
2 digital input modules SM 321; DI 16 x DC 24 V	(2 x 25 mA) = 50 mA	(2 x 25 mA) = 50 mA	(2 x 3.5 W) = 7 W
1 relay module SM 322; DO 8 x AC 230 V/5 A	40 mA	125 mA	4.2 W
1 analog input module SM 331; AI 8 x 12 bits	60 mA	200 mA	1.3 W
1 analog output module SM 332; AO 2 x 12 bits	60 mA	135 mA	3 W
1 communications module TIM 4R	60 mA	500 mA	12.3 W
1 modem MD3	-	200 mA	4.8 W
Total:	**270 mA**	**1910 mA**	**50.6 W**

Result

The following results can be derived from the table above:

1. Current consumption from S7-300 backplane bus:
   The current consumption of the signal and TIM modules from the backplane bus amounts to a total of 270 mA. It does not therefore exceed the 1.2 A that the CPU 314 can supply to the backplane bus.
2. Current consumption from the 24 V power supply:
   The current consumption of the signal. TIM and modem modules from the 24 V load power supply amounts to approx. 1.9 A. All additional loads must also be taken into account. Depending on this, you can then select the PS 307 power supply. The PS 307 unit with 2 A output current would probably be not quite adequate for this example.
3. Power loss:
   The power loss of the S7-300 configuration amounts to a total of 50.6 W.
   The power loss of all the components used in a cabinet (including the S7-300 configuration with 50.6 W) must not exceed the maximum suppliable power of the cabinet.

Note

When planning the dimensions of the cabinet, make sure that the temperature in the cabinet does not exceed the permitted maximum of 60°C even when the temperature outside the cabinet is high.

3.4 Installing the TIM 3V-IE variants in an S7-300

Introduction

The TIM 3V-IE variants can be used in an S7-300 as communications processors (CP). In principle, all S7-300 standard and compact CPUs can be combined with these TIMs. There are, however, constraints that must be taken into account relating to the way in which data exchange between the TIM and the CPU in the rack is handled (the SINAUT program). For the TIM 3V-IE variants, there are two options:

1. TD7onTIM
   This SINAUT TD7 program runs on the TIM.
   All standard and compact CPUs can be used with restriction.
2. TD7onCPU
   This SINAUT TD7 program runs on the CPU and is created for the CPU with blocks from the SINAUT TD7 library.
   In this case, only CPUs with a work memory adequate to accommodate the SINAUT program can be used. The size of the program depends on the amount of data to be transmitted. At least 20 Kbytes are required. TD7onCPU can be used for several standard CPU types if the following software packages are used:
   - "SINAUT TD7 library for the CPU" as of V2.2
   - "TIM firmware" as of V1.2

The following CPU lists also include older CPU types that can no longer be ordered as new devices but that nevertheless may still be in use in the field. These are shown in parentheses.

Standard CPU modules

CPU 312	as of 6ES7 312-1AD10-0AB0
(CPU 312 IFM)	as of 6ES7 312-5AC00-0AB0
(CPU 313)	as of 6ES7 313-1AD00-0AB0
CPU 314	as of 6ES7 314-1AE02-0AB0
(CPU 314 IFM)	as of 6ES7 314-5AE02-0AB0
(CPU 315)	as of 6ES7 315-1AF01-0AB0
CPU 315-2 DP	as of 6ES7 315-2AF01-0AB0
CPU 315-2 PN/DP	as of 6ES7 315-2EG10-0AB0
CPU 315T-2 DP	as of 6ES7 315-6TG10-0AB0
CPU 315F-2 DP	as of 6ES7 315-6FF00-0AB0
CPU 315F-2 PN/DP	as of 6ES7 315-2FH10-0AB0
(CPU 316)	as of 6ES7 316-1AG00-0AB0
(CPU 316-2 DP)	as of 6ES7 316-2AG00-0AB0
CPU 317-2 DP	as of 6ES7 317-2AJ10-0AB0
CPU 317-2 PN/DP	as of 6ES7 317-2EJ10-0AB0
CPU 317T-2 DP	as of 6ES7 317-6TJ10-0AB0
CPU 317F-2 DP	as of 6ES7 317-6FF00-0AB0

CPU 317F-2 PN/DP	as of 6ES7 317-2FJ10-0AB0
(CPU 318-2 DP)	as of 6ES7 318-2AJ00-0AB0
CPU 319-3 PN/DP	as of 6ES7 318-3EL00-0AB0

Compact CPU modules

CPU 312C	as of 6ES7 312-5BD00-0AB0
CPU 313C	as of 6ES7 313-5BE00-0AB0
CPU 313C-2PtP	as of 6ES7 313-6BE00-0AB0
CPU 313C-2DP	as of 6ES7 313-6CE00-0AB0
CPU 314C-2PtP	as of 6ES7 314-6BF00-0AB0
CPU 314C-2DP	as of 6ES7 314-6CF00-0AB0

Instead of an S7-300 standard or compact CPU, one of the following C7 control systems may also be used.

C7 control systems

C7-613	as of 6ES7 613-1CA00-0AE3
(C7-623/P)	as of 6ES7 623-1DE01-0AE3
(C7-626/P)	as of 6ES7 626-1DG02-0AB3
(C7-626/P DP)	as of 6ES7 626-2DG02-0AB3
(C7-633/P)	as of 6ES7 633-1DF00-0AB3
(C7-633/DP)	as of 6ES7 633-2BF00-0AB3
(C7-634/P)	as of 6ES7 634-1DF00-0AB3
(C7-634/DP)	as of 6ES7 634-2BF00-0AB3
C7-635 Key	as of 6ES7 635-2EC00-0AB3
C7-635 Touch	as of 6ES7 635-2EB00-0AB3
C7-636 Key	as of 6ES7 636-2EC00-0AB3
C7-636 Touch	as of 6ES7 636-2EB00-0AB3

Installation in a rack

With standard and compact CPU modules, the TIM can be inserted into any of the racks 0 to 3 but only in expansion racks 1 to 3 if these racks are connected to the CPU over the IM 360/IM 361 interface modules.

With the C7 control systems, the TIM can be inserted in any of the expansion racks 1 to 3. These are connected to the C7 device over IM 360/IM 361 interface modules (the IM 360 is already integrated in the C7 device). With the C7-635 and C7-636 devices, this is also possible without the IM 361 if no more than four modules including the TIM are connected externally.

For all S7-300 racks the following applies: All slots designed for SM, FM or CP can also be used for the TIM.

A bus module connector ships with every TIM. The TIM is connected to the module to its left by the bus module connector.

If a SINAUT modem of the type MD2, MD3 or MD4 is used, this can be installed on a separate S7-300 rail or on a 35 mm DIN rail (an adapter is available). To save space, it can also be installed in a free slot of racks 0 to 3. This modem is connected over the RS-232 port of the TIM using a standard connecting cable, type 6NH7701-xxx.

NOTICE
Since the SINAUT-Modems MD2, MD3 and MD4 do not have an S7-300 backplane bus, an S7-300 SM, FM or CP module that communicates with the CPU over this backplane bus must not be inserted to the right of the modem!

Note

In all of the sample configurations of the S7-300, it is assumed that a 24 V power supply is available for the CPU, the TIMs and the other modules.

Note

Direct connection of a TIM 3V-IE variant to the PROFINET interface of an S7-300-CPU is not possible!

S7-300 with access to a classic WAN

To implement classic WAN access for an S7-300, you can use either a TIM 3V-IE or a TIM 3V-IE Advanced. The following figure shows such a configuration.

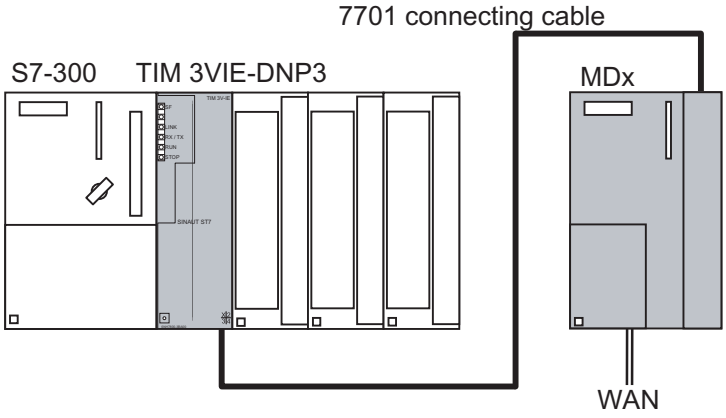

Figure 3-1 SIMATIC S7-300 with TIM 3V-IE with 1 connection to classic WAN over an external MDx modem

Other modems with an RS-232 interface can also be used, for example wireless devices or the SINAUT GSM modem MD720-3.

S7-300 with access to IP-based WAN

To implement IP-based WAN access for an S7-300, you can use either a TIM 3V-IE or a TIM 3V-IE Advanced.

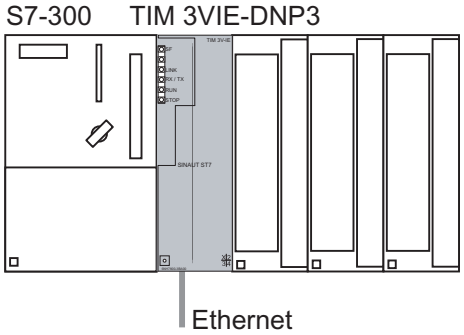

Figure 3-2 SIMATIC S7-300 with TIM 3V-IE with 1 connection to IP-based WAN

A module is required on the Ethernet interface (RJ-45) of the TIM to link the TIM to an IP-based WAN. The following are, for example, possible:

- SCALANCE X switches for twisted-pair or FO cable
- SCALANCE W wireless devices for data transmission over IWLAN
- Other wireless devices optimized for Ethernet
- The SINAUT GPRS router MD741-1 for mobile wireless data transmission with GPRS
- The SINAUT GPRS modem MD720-3 for simple Internet communication with an MSC tunnel (see volume 2 of this manual)
- DSL router
- Backbone transmission systems such as OTN, PCM30

Two examples are illustrated below.

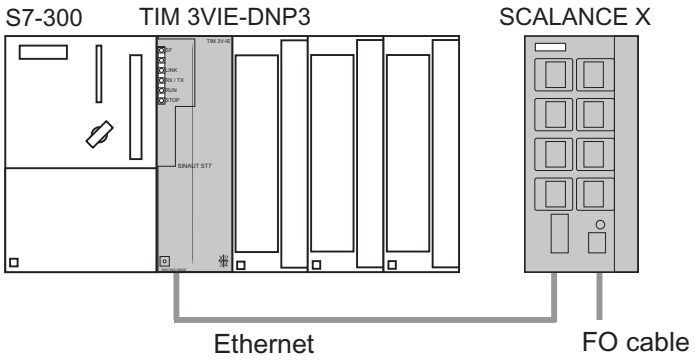

Figure 3-3 SIMATIC S7-300 with TIM 3V-IE connected to an FO cable over a SCALANCE X-200

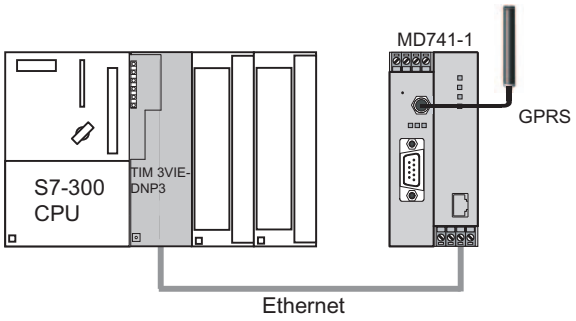

Figure 3-4 SIMATIC S7-300 with TIM 3V-IE, 1 GPRS access via MD741-1 router

S7-300 with two WAN attachments

To achieve two connections to a WAN for an S7-300, in other words, classic WAN access and IP-based access, a TIM 3V-IE Advanced must be used. A TIM 3V-IE is not suitable in this case, because only one of its two interfaces can be used. The following figure shows such a configuration.

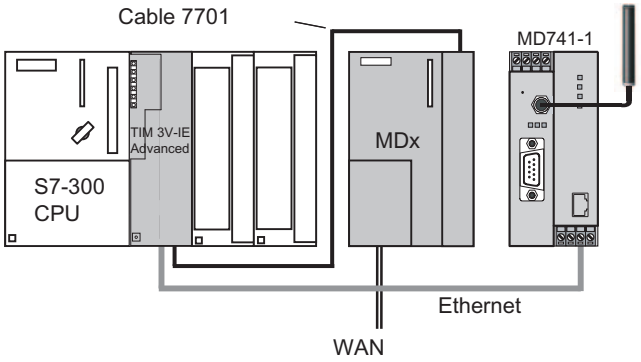

Figure 3-5 SIMATIC S7-300 with TIM 3V-IE Advanced with 2 connections to a WAN

Instead of the MDx SINAUT modem, other modems with an RS-232 interface can also be used, for example wireless devices or the SINAUT GSM modem MD720-3.

S7-300 with maximum configuration

A maximum of one (standard) TIM 3V-IE can be inserted in an S7-300. Only one of the two interfaces (RS-232, RJ-45) can then be used for SINAUT data transmission.

If a TIM 3V-IE Advanced is used, the maximum number that can be inserted in an S7-300 depends on the resources provided by the CPU. Two connection resources per TIM are required on the CPU.

Apart from the connection resources, the available work memory on the CPU must also be taken into consideration. The more TIMs installed and the more stations connected and the more objects processed per station, the greater the memory requirements of the telecontrol-specific user program on the CPU. This program is put together with blocks from the SINAUT TD7 software package. The SINAUT program can run entirely on the CPU (TD7onCPU), with the TIM 3V-IE variants also on the TIM (TD7onTIM).

ST7cc / ST7sc with the TIM 3V-IE Advanced

A TIM 3V-IE Advanced can be used as a master TIM for the PC of the ST7cc or ST7sc control center. In this case, the TIM 3V-IE Advanced requires an S7-300 CPU because it cannot work without a CPU.

In the two cases illustrated below, the maximum number of TIMs in the rack is not limited by the connection resources of the CPU because they are not required. You should not insert more than 8 TIMs. Less TIMs per CPU are preferable to achieve better availability. The greatest availability is achieved when there is only one (1) TIM in the rack connected to the CPU over the backplane bus.

There are two ways of connecting the CPU/TIM module combination to the PC as illustrated by the following two configurations.

Connection to ST7cc / ST7sc over MPI

The following figure shows a configuration in which the TIM is connected to the PC over the MPI interface of its CPU. This is possible only when one of the CPU modules listed in the section "Installation of the TIM 4 as CP in an S7-300 (Page 119)" is used in the S7-300 rack. Only then can the TIM be addressed as a node under its own MPI address on the MPI bus. This allows the PC and TIM to exchange data directly. No SINAUT software is necessary on the CPU.

With this configuration, the TIM 3V-IE Advanced provides the control center with two connections to a WAN:

- over the RS-232 port to a classic WAN
- Over the RJ-45 interface to an IP-based WAN

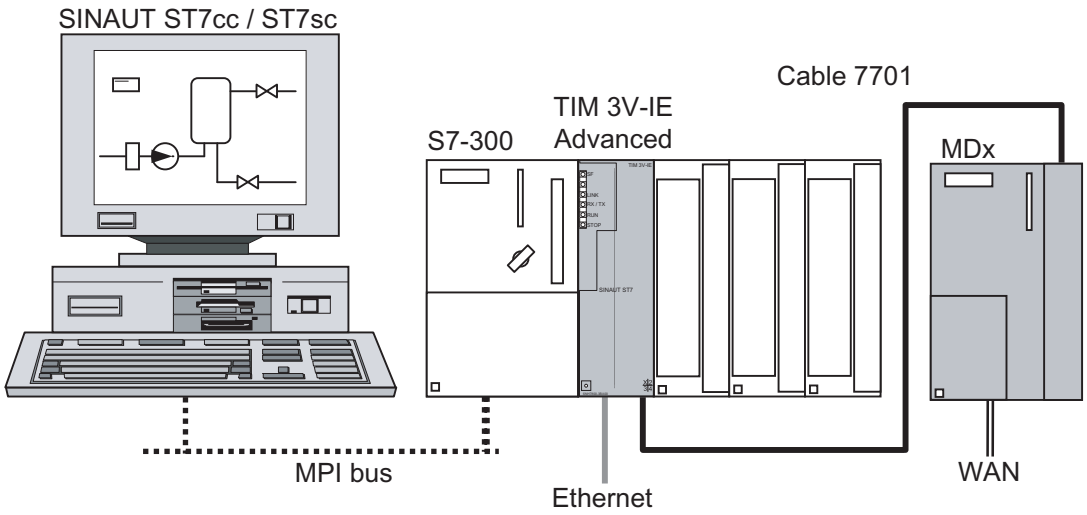

Figure 3-6 SINAUT ST7cc / ST7sc control center with a TIM 3V-IE Advanced connected over MPI, 1 classic connection to WAN and 1 IP-based connection to WAN

With this configuration. further TIM 3V-IE Advanced modules could be inserted in the S7-300 rack and all connected to the PC over the MPI port of the CPU. Each TIM provides the PC with two further connections to the WAN. In this case, the maximum number of TIM modules is not restricted by the connection resources of the CPU because they are not required. The maximum number of TIM modules is restricted by the number of connection resources of the CP in the control center PC.

Connection to ST7cc / ST7sc over Ethernet

The following figure shows a configuration in which the TIM is connected to the PC over its Ethernet interface. As of ST7cc V2.5 or ST7sc V1.1, the TIM can exchange data directly with ST7cc/ST7sc over its Ethernet interface.

There are no special requirements of the CPU for this configuration. No SINAUT software is necessary on the CPU for communication between the TIM and PC.

Since the Ethernet interface is occupied by the local communication with the PC, the TIM 3V IE only provides the control center with one connection to a WAN in this configuration.

- over the RS-232 port to a classic WAN

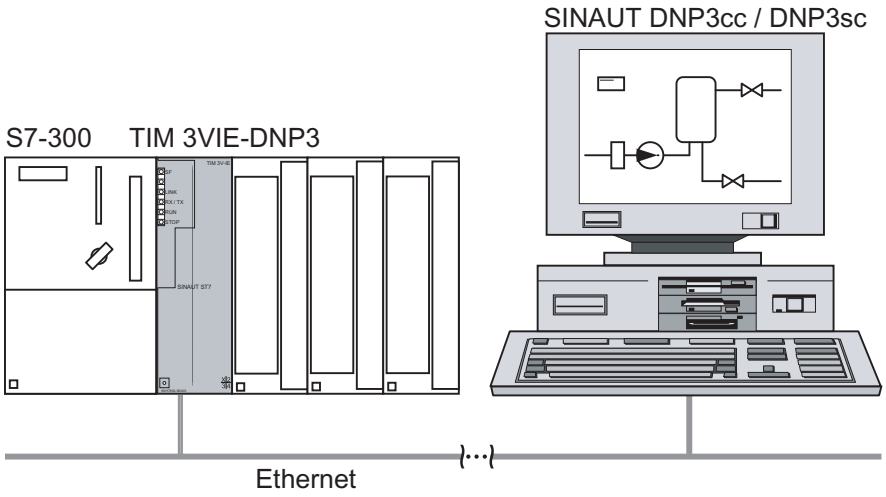

Figure 3-7 SINAUT ST7cc / ST7sc control center system with a TIM 3V-IE providing a connection over Ethernet,
1 classic connection to WAN.

Even with this configuration, further TIM 3V-IE Advanced modules can be inserted in the S7-300 rack. Each TIM can be connected to the PC over its Ethernet interface and provides the PC with one connection to a WAN.

The other TIMs can also transfer their data to the first TIM over the backplane bus and use the Ethernet interface of this TIM as a common access to the PC. In this case, each further TIM provides the PC with two connections to the WAN. In this case, the maximum number of TIM modules is not restricted by the connection resources of the CPU because they are not required. The maximum number of TIM modules is restricted by the number of connection resources of the CP in the control center PC.

3.5 Installing the TIM 4R-IE in an S7-300

Introduction

The TIM 4R-IE can be used in an S7-300 as a communications processor (CP). All S7-300 standard and compact CPUs can be combined with the TIM 4R-IE. There are, however, constraints that must be taken into account relating to the way in which data exchange between the TIM and the CPU in the rack is handled (the SINAUT program). For the TIM 4R-IE, there are two options:

1. TD7onTIM
   This SINAUT TD7 program runs on the TIM.
   All standard and compact CPUs can be used with restriction.
2. TD7onCPU
   This SINAUT TD7 program runs on the CPU and is created for the CPU with the blocks from the SINAUT TD7 library.
   In this case, only CPUs with a work memory adequate to accommodate the SINAUT program can be used. The size of the program depends on the amount of data to be transmitted. At least 20 Kbytes are required.

   TD7onCPU can be used for several CPU types if the following software packages are used:

   – "SINAUT TD7 library for the CPU" as of V2.2
   – "TIM firmware" as of V1.0

The following CPU lists also include older CPU types that can no longer be ordered as new devices but that nevertheless may still be in use in the field. These are shown in parentheses.

Standard CPU modules

CPU 312	as of 6ES7 312-1AD10-0AB0
(CPU 312 IFM)	as of 6ES7 312-5AC00-0AB0
(CPU 313)	as of 6ES7 313-1AD00-0AB0
CPU 314	as of 6ES7 314-1AE02-0AB0
(CPU 314 IFM)	as of 6ES7 314-5AE02-0AB0
(CPU 315)	as of 6ES7 315-1AF01-0AB0
CPU 315-2 DP	as of 6ES7 315-2AF01-0AB0
CPU 315-2 PN/DP	as of 6ES7 315-2EG10-0AB0
CPU 315T-2 DP	as of 6ES7 315-6TG10-0AB0
CPU 315F-2 DP	as of 6ES7 315-6FF00-0AB0
CPU 315F-2 PN/DP	as of 6ES7 315-2FH10-0AB0
(CPU 316)	as of 6ES7 316-1AG00-0AB0
(CPU 316-2 DP)	as of 6ES7 316-2AG00-0AB0
CPU 317-2 DP	as of 6ES7 317-2AJ10-0AB0
CPU 317-2 PN/DP	as of 6ES7 317-2EJ10-0AB0
CPU 317T-2 DP	as of 6ES7 317-6TJ10-0AB0

CPU 317F-2 DP	as of 6ES7 317-6FF00-0AB0
CPU 317F-2 PN/DP	as of 6ES7 317-2FJ10-0AB0
(CPU 318-2 DP)	as of 6ES7 318-2AJ00-0AB0
CPU 319-3 PN/DP	as of 6ES7 318-3EL00-0AB0

Compact CPU modules

CPU 312C	as of 6ES7 312-5BD00-0AB0
CPU 313C	as of 6ES7 313-5BE00-0AB0
CPU 313C-2PtP	as of 6ES7 313-6BE00-0AB0
CPU 313C-2DP	as of 6ES7 313-6CE00-0AB0
CPU 314C-2PtP	as of 6ES7 314-6BF00-0AB0
CPU 314C-2DP	as of 6ES7 314-6CF00-0AB0

Instead of an S7-300 standard or compact CPU, one of the following C7 control systems may also be used.

C7 control systems

C7-613	as of 6ES7 613-1CA00-0AE3
(C7-623/P)	as of 6ES7 623-1DE01-0AE3
(C7-626/P)	as of 6ES7 626-1DG02-0AB3
(C7-626/P DP)	as of 6ES7 626-2DG02-0AB3
(C7-633/P)	as of 6ES7 633-1DF00-0AB3
(C7-633/DP)	as of 6ES7 633-2BF00-0AB3
(C7-634/P)	as of 6ES7 634-1DF00-0AB3
(C7-634/DP)	as of 6ES7 634-2BF00-0AB3
C7-635 Key	as of 6ES7 635-2EC00-0AB3
C7-635 Touch	as of 6ES7 635-2EB00-0AB3
C7-636 Key	as of 6ES7 636-2EC00-0AB3
C7-636 Touch	as of 6ES7 636-2EB00-0AB3

Installation in a rack

With standard and compact CPU modules, the TIM can be inserted into any of the racks 0 to 3 but only in expansion racks 1 to 3 if these racks are connected to the CPU over the IM 360/IM 361 interface modules.

With the C7 control systems, the TIM can be inserted in any of the expansion racks 1 to 3. These are connected to the C7 device over IM 360/IM 361 interface modules (the IM 360 is already integrated in the C7 device). With the C7-635 and C7-636 devices, this is also possible without the IM 361 if no more than four modules including the TIM are connected externally.

For all S7-300 racks the following applies: All slots designed for SM, FM or CP can also be used for the TIM.

A bus module connector ships with every TIM. The TIM is connected to the module to its left by the bus module connector.

If a SINAUT modem of the type MD2, MD3 or MD4 is used, this can be installed on a separate S7-300 rail or on a 35 mm DIN rail (an adapter is available). To save space, it can also be installed in a free slot of racks 0 to 3. This modem is connected over the RS-232 port of the TIM using a standard connecting cable, type 6NH7701-xxx.

NOTICE
Since the SINAUT-Modems MD2, MD3 and MD4 do not have an S7-300 backplane bus, an S7-300 SM, FM or CP module that communicates with the CPU over this backplane bus must not be inserted to the right of the modem!

Note

In all of the sample configurations of the S7-300, it is assumed that a 24 V power supply is available for the CPU, the TIMs and the other modules.

The maximum number of TIM modules that can be inserted in an S7-300 station depends on the connection resources made available by the CPU.

S7-300 with one TIM 4R-IE

With an S7-300 and one TIM 4R-IE, it is possible to set up an extremely efficient node station. The following figure shows an example in which the master station is connected over one of the two Ethernet interfaces of the TIM. The connections to the subsidiary stations are established over the other three interfaces: here, over two classic WANs using suitable MDx SINAUT modems and over an IP-based WAN, in this case an FO cable connected via a SCALANCE X switch.

In these configurations, the master station and stations can exchange data among themselves over the TIM 4R-IE as well as with the CPU of the node station. The TIM 4R-IE also supports direct communication between stations in the three underlying networks, in other words both within a network and from one network to another.

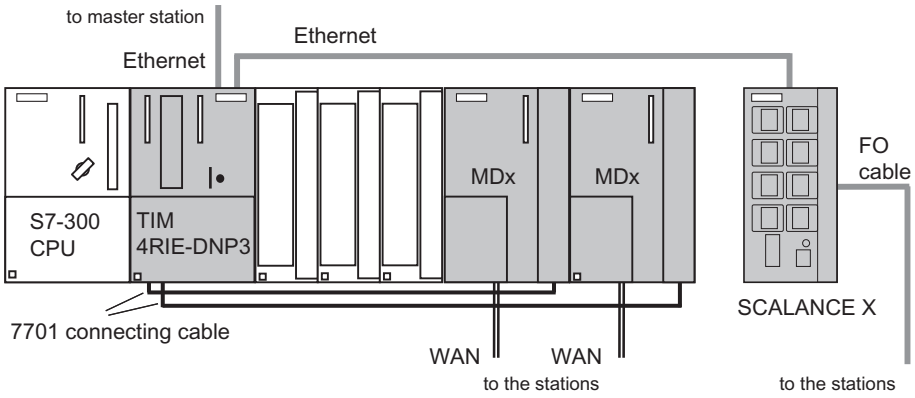

Figure 3-8 SIMATIC S7-300 with TIM 4R-IE, 2 connections to WAN, 2 connections to Ethernet, one Ethernet interface connected over SCALANCE X-200 by FO cable

Instead of the MDx SINAUT modem, other modems with an RS-232 or RS-485 interface can also be used, for example wireless devices or the SINAUT GSM modem MD720-3.

The following figure shows a different node station variant in which the TIM 4R-IE has a redundant connection both to the master station and to the subsidiary stations. A variant of this configuration would be to have a redundant connection only to the master station and to have single transmission paths to the stations. Which two interfaces are redundant can be freely selected by the user.

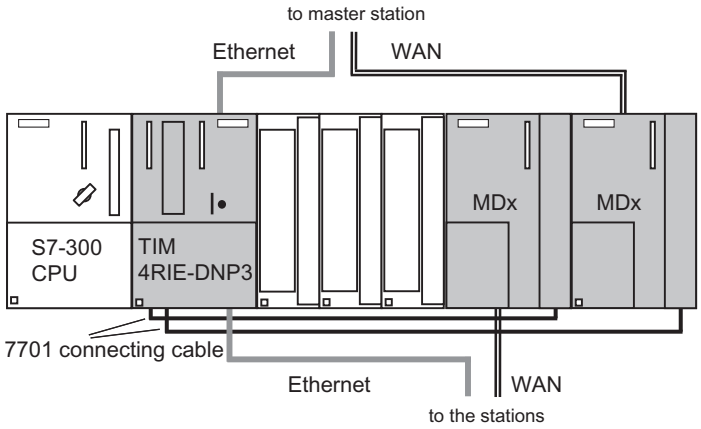

Figure 3-9 SIMATIC S7-300 with TIM 4R-IE,
1 connection to WAN and 1 connection to Ethernet as redundant routes to the stations and to the master station

Standalone TIM 4R-IE as master station or node station

The following figure shows the use of the TIM 4R-IE in a standalone configuration; in other words, without an S7-300 CPU. This configuration is found typically in a master station. It could, however, also be used in a node station if its sole purpose is to interconnect the various networks over the TIM and no local control or data acquisition is required.

In this configuration, you can see in detail how a station can be connected redundantly. The example assumes that the main path is implemented as a dedicated line. The alternative path is via the GPRS mobile wireless service and the Internet.

The redundantly connected station has an Ethernet TIM (in this case a TIM 3V-IE Advanced). To connect to the alternative path, the Ethernet interface is connected to the MD741-1 GPRS router. The data is transferred via GPRS and the Internet to the TIM in the master/node station using the substitute value. There, a fixed connection to the Internet is required, for example over a DSL router. To provide security on the path over GPRS/Internet, a SCALANCE S security module (for example S612) is inserted between the TIM and DSL router with which the MD741-1 can establish a VPN tunnel.

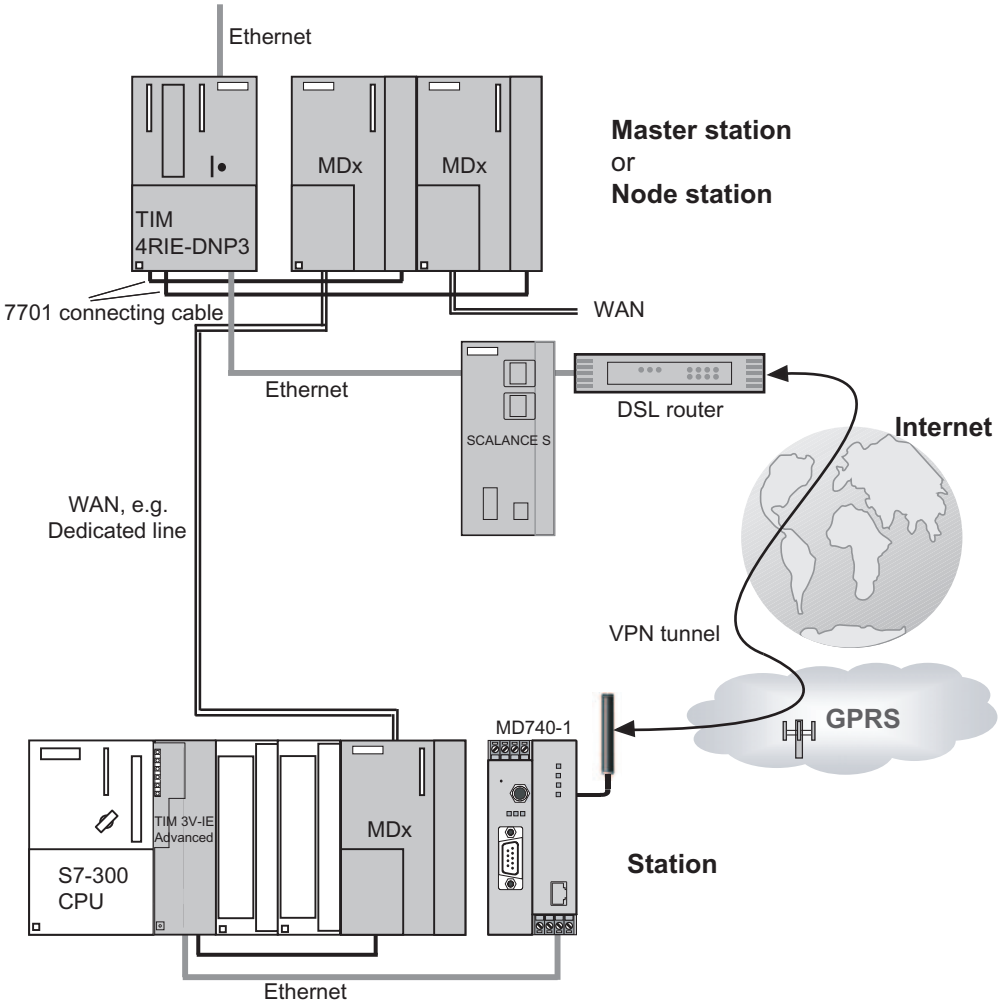

Figure 3-10 TIM 4R-IE in a master station or node station, redundant connection to subsidiary station; one path as dedicated line, the second over GPRS and Internet

Direct communication over TIM 4R-IE and other TIM modules

As described above, with a TIM 4R-IE, direct communication is possible between all stations on all networks connected to the TIM. If there are other TIM modules on Ethernet or on the MPI bus in addition to the TIM 4R-IE, direct communication can also be extended to the networks of the other TIMs.

The first example shows the path of direct communication between stations connected to a standalone TIM 4R-IE and a TIM 3V-IE. The two TIMs are interconnected over Ethernet.

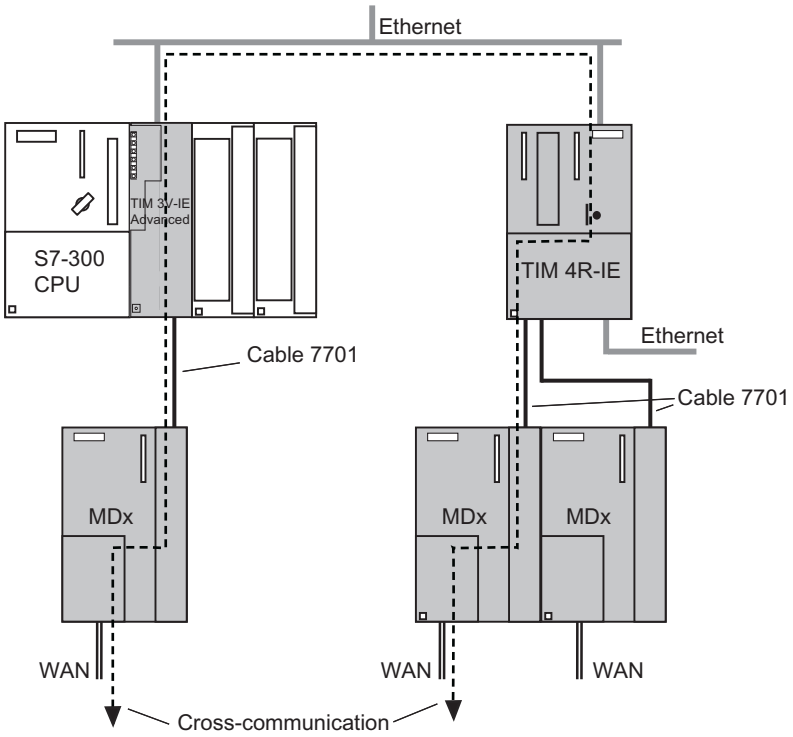

Figure 3-11 Direct communication over a standalone TIM 4R-IE and a TIM 3V-IE Advanced (direct communication paths are shown as dashed lines)

The second example shows the path of direct communication between stations connected to a standalone TIM 4 and a TIM 4R-IE. The two TIMs are interconnected over MPI. The TIM 4R-IE is installed in an S7-300 so that it can communicate with the standalone TIM 4 over the MPI interface of the CPU. Within the S7-300, the direct communication path is via the backplane bus.

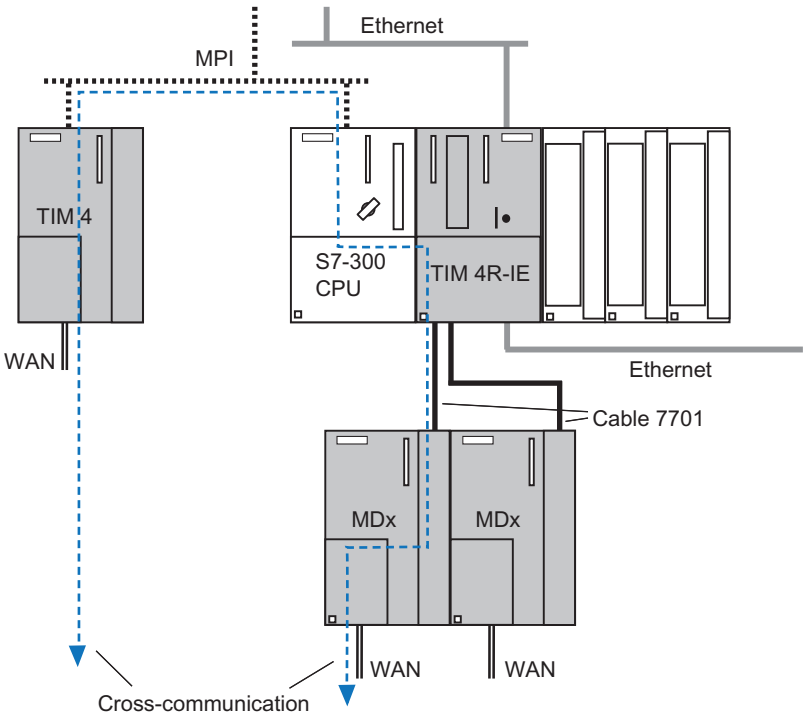

Figure 3-12 Direct communication over a TIM 4 (standalone), MPI and a TIM 4R-IE, installed in an S7-300; communication within the S7-300 over the backplane bus (direct communication paths are shown as dashed lines)

A further example shows the path of direct communication between stations connected to a TIM 4R-IE and a TIM 4 or TIM 3. The two TIMs are installed in an S7-300 and interconnected over the backplane bus. Within the S7-300, the direct communication path is via the backplane bus. In this example, this also applies to the data exchanged with the master station over the TIM 3/4 (see figure below).

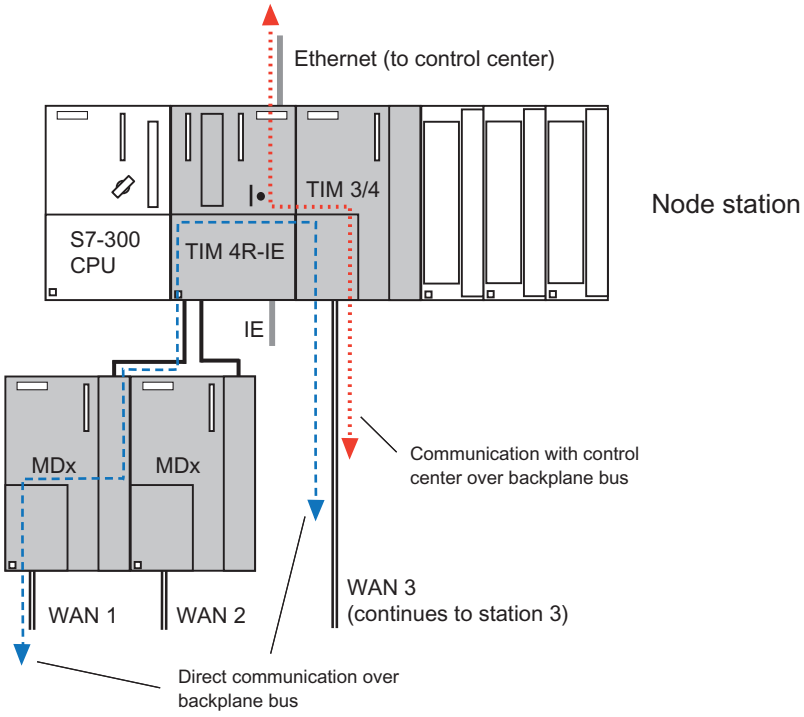

Figure 3-13 Direct communication over a TIM 4R-IE and a TIM 3 or TIM 4 in an S7-300 rack; communication within the S7-300 over the backplane bus (direct communication paths are shown as dashed lines)

In this example, the CPU of station 3 (not shown in figure) on WAN 3 communicates with the master station and one or more stations on WAN 1 over a TIM 3 or TIM 4 and the TIM 4R-IE.

NOTICE

When selecting the CPU in the above node station configuration, the following applies:

If the stations connected to the TIM 3/4 (for example station 3) also need to exchange data with the CPU in the node station, you will need to use one of the following CPUs. The following types are possible:

- All variants of the CPUs 312, 312C, 313C, 314 and 314C
- The CPUs 315-2 DP and 315F-2 DP

  For information on selecting CPU types for a TIM 4 in an S7-300 station, refer also to section Installation of the TIM 4 as CP in an S7-300 (Page 119).

If the TIM 3/4 does not need to communicate with the CPU in the node station, you can select any CPU.

3.6 Standalone TIM 4R-IE with an S7-400 or PC

Introduction

In standalone mode, in other words, without an S7-300-CPU, the TIM 4R-IE is ideally suited as a SINAUT communications processor for an S7-400 or for the PC of the ST7cc or ST7sc control center. They are then linked over one of the Ethernet ports of the TIM.

With an S7-400, an Ethernet CP should be used as the interface. The following S7-400-CPUs can be linked over an Ethernet CP:

CPU 412-1	as of 6ES7 412-1XF00-0AB0	(Version 02)
CPU 412-2	as of 6ES7 412-2XG00-0AB0	(Version 01)
(CPU 413-1)	as of 6ES7 413-1XG00-0AB0	(Version 02)
(CPU 413-2)	as of 6ES7 413-2XG00-0AB0	(Version 03)
(CPU 414-1)	as of 6ES7 414-1XG00-0AB0	(Version 02)
CPU 414-2	as of 6ES7 414-2XG00-0AB0 as of 6ES7 414-2XJ00-0AB0	(version 03) (version 01)
CPU 414-3[1)]	as of 6ES7 414-3XJ00-0AB0	(Version 01)
(CPU 416-1)	as of 6ES7 416-1XJ00-0AB0	(Version 02)
CPU 416-2	as of 6ES7 416-2XK00-0AB0 (as of 6ES7 416-2XL00-0AB0)	(version 01) (version 01)
CPU 416-3	as of 6ES7 416-3XL00-0AB0	(Version 01)
CPU 416F-2	as of 6ES7 416-2FK02-0AB0	(Version 01)
CPU 417-4[1)]	as of 6ES7 417-4XL00-0AB0	

[1)] Fault-tolerant SINAUT solutions with a CPU 414-4H or CPU 417-4H are not possible!

With the SINAUT ST7cc or ST7sc control center system, the TIM 4R-IE is connected to the Ethernet card of the control center computer over its Ethernet port.

Installation

When installed separately, the TIM is normally installed on a separate S7-300 standard rail, when necessary along with a power supply module to supply the TIM with 24 V. If the SINAUT MD2, MD3 or MD4 modems are used, they can also be installed on the same rail. The bus module connector supplied with every TIM is not required here since the TIM and modem are always interconnected over the 6NH7701-xxx connecting cable.

TIM 4R-IE with SIMATIC S7-400

The TIM 4R-IE is connected to a SIMATIC S7-400 over one of the Ethernet ports of the TIM. With the S7-400, an Ethernet CP is used as the interface.

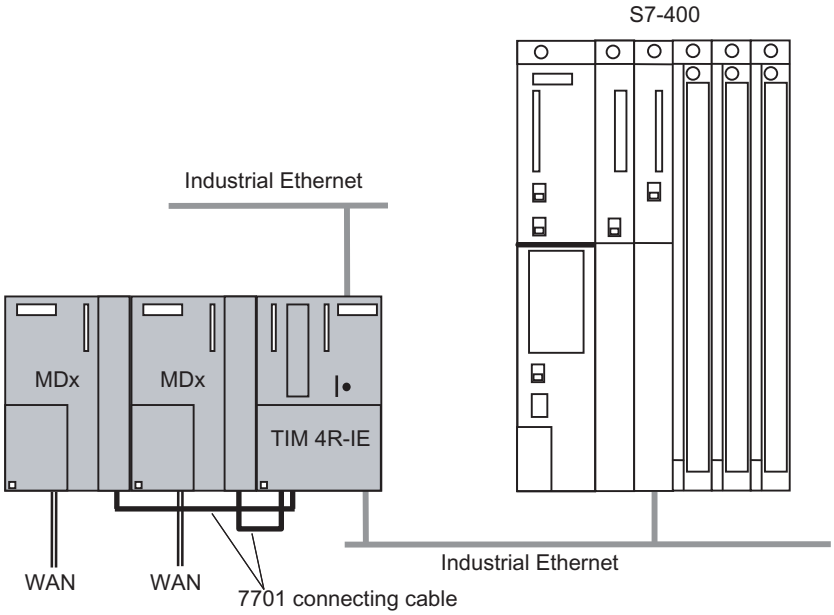

Figure 3-14 SIMATIC S7-400 with TIM 4R-IE connected over Ethernet,
1 connection to IP-based WAN or LAN,
2 classic connections to WAN, for example over SINAUT MDx modems

Instead of the MDx SINAUT modem, other modems with an RS-232 or RS-485 interface can also be used, for example wireless devices or the SINAUT GSM modem MD720-3.

Note

Fault-tolerant SINAUT solutions with a CPU 414-4H or CPU 417-4H are not possible.

The maximum number of TIMs that can be connected to S7-400 depends on the connection resources provided by the CPU. With an S7-400, one (1) connection resource is required per TIM. However, the available work memory of the CPU must also be taken into account; the more TIMs installed and stations connected, and the more objects processed per station, the greater the memory demands of the telecontrol-specific user program on the central CPU. This program is put together with blocks from the SINAUT TD7 software package (TD7onCPU).

Example of configurations with the SINAUT ST7cc or ST7sc control center systems

With the SINAUT ST7cc or ST7sc control center system, the TIM 4R-IE is connected to the Ethernet card of the control center computer over one of its Ethernet ports.

The following figure shows a configuration for a SINAUT ST7cc or ST7sc control center system with a TIM 4R-IE module connected over Industrial Ethernet.

The control center can communicate with SINAUT subscribers over the TIM 4R-IE. Up top three different networks can be connected: One network could be an IP-based WAN or LAN, the two other networks might be classic SINAUT networks such as dedicated line or telephone network.

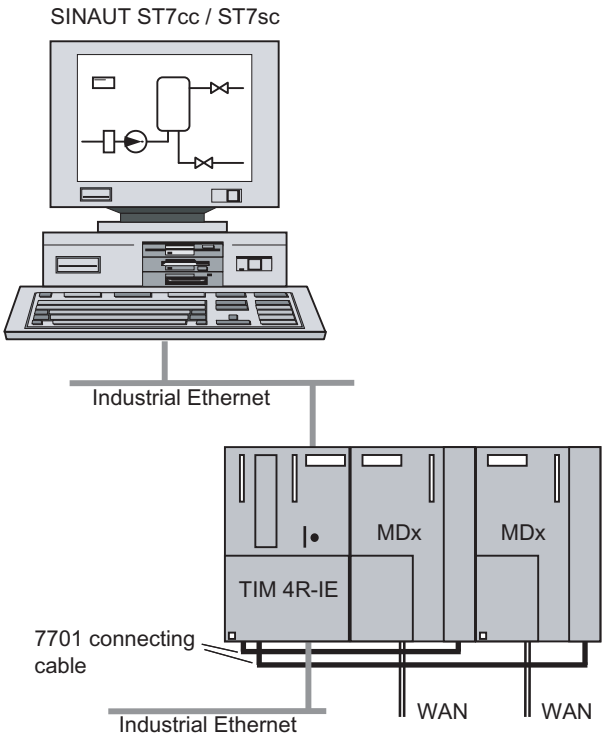

Figure 3-15 SINAUT ST7cc / ST7sc control center system with TIM 4R-IE connected over Ethernet, 1 connection to IP-based WAN or LAN, 2 classic connections to WAN, for example over SINAUT MDx modems

Other modems with an RS-232 or RS-485 interface can be used instead of the SINAUT MDx modems, for example wireless devices or the SINAUT GSM modem MD720-3. The RS-485 ports of the TIM 4R-IE also allow a star-shaped dedicated line network to be connected using several modems. You will find more information on this topic in the section "Installation and commissioning of a SINAUT modem".

Apart from the SINAUT ST7cc / ST7sc control center system, a local controller, for example an S7-400 can also be connected to Ethernet and exchange data with the stations in the telecontrol network. This controller could, for example, be used to display data received from the stations on a panel or console or for emergency input by an operator if ST7cc / ST7sc failed.

The controller could also handle central control tasks such as starting up the system. SINAUT ST7cc / ST7sc and the central controller are then both supplied with parallel data. Both can receive the same data or data specifically intended for one or the other. The transfer of commands, setpoints, parameters etc. to the stations in the telecontrol network is possible from both ST7cc / ST7sc and from the S7-400.

The next figure shows a similar configuration. Here, a redundant SINAUT ST7cc or ST7sc control center system is connected over one of the Ethernet ports.

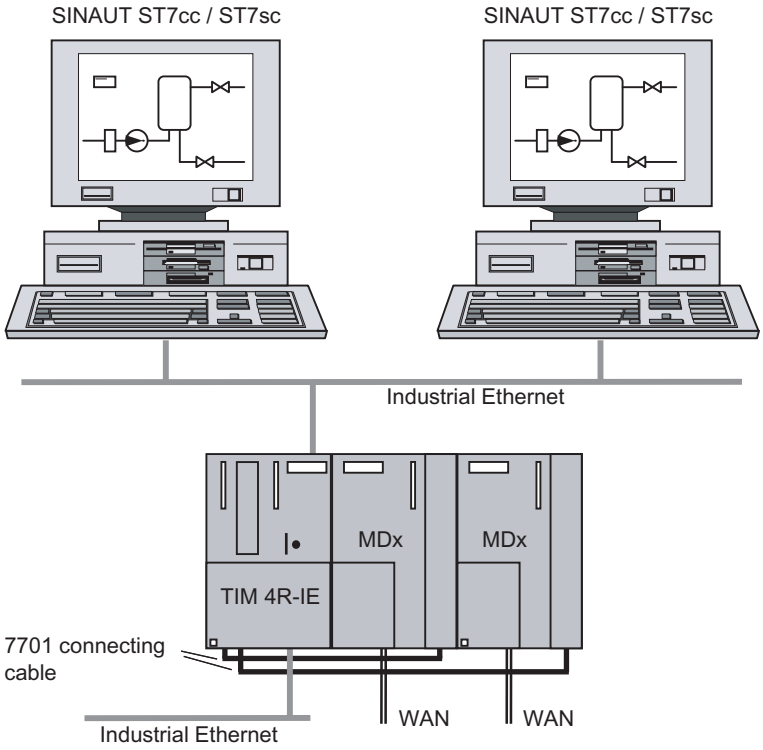

Figure 3-16 Redundant SINAUT ST7cc / ST7sc control center system with TIM 4R-IE connected over Ethernet,
1 connection to IP-based WAN or LAN,
2 classic connections to WAN, for example over SINAUT MDx modems

3.7 Installation of the TIM 4 as CP in an S7-300

Introduction

This section explains the installation of the various TIM 4 modules in an S7-300.

A SINAUT program is required on the CPU for data exchange between the TIM and the CPU installed in the rack. This is created for the CPU with blocks from the SINAUT TD7 library (TD7onCPU). When selecting one the CPUs listed below that can all be used in principle with a TIM 4, make sure that the work memory of the CPU is large enough to accommodate the TD7onCPU program. The size of the program depends on the amount of data to be transmitted. At least 20 Kbytes are required.

The TIM 4 can be used in an S7-300 as the communications processor (CP) along with one of the S7-300 CPUs listed below.

The following CPU lists also include older CPU types that can no longer be ordered as new devices but that nevertheless may still be in use in the field. These are shown in parentheses.

Standard CPU modules

CPU 312	as of 6ES7 312-1AE13-0AB0
CPU 314	as of 6ES7 314-1AE02-0AB0
(CPU 314 IFM)	as of 6ES7 314-5AE02-0AB0
(CPU 315)	as of 6ES7 315-1AF01-0AB0
CPU 315-2 DP	as of 6ES7 315-2AF01-0AB0
CPU 315F-2 DP	as of 6ES7 315-6FF00-0AB0
(CPU 316)	as of 6ES7 316-1AG00-0AB0
(CPU 316-2 DP)	as of 6ES7 316-2AG00-0AB0

NOTICE

With all CPUs of the type 317, 318 and 319 and with the CPU 315-2 PN/DP, a TIM 4 cannot be operated as a CP in the S7-300 rack. For these CPUs, you require either an Ethernet TIM (TIM 3V-IE variant, TIM 4R-IE) or a TIM 4 connected to the CPU as a standalone TIM over its MPI interface.

Compact CPU modules

CPU 312C	as of 6ES7 312-5BE03-0AB0
CPU 313C	as of 6ES7 313-5BE00-0AB0
CPU 313C-2PtP	as of 6ES7 313-6BE00-0AB0
CPU 313C-2DP	as of 6ES7 313-6CE00-0AB0
CPU 314C-2PtP	as of 6ES7 314-6BF00-0AB0
CPU 314C-2DP	as of 6ES7 314-6CF00-0AB0

Instead of an S7-300 standard or compact CPU, one of the following C7 control systems may also be used.

C7 control systems

(C7-623/P)	as of 6ES7 623-1DE00-0AE3
(C7-626/P)	as of 6ES7 626-1DG02-0AB3
(C7-626/P DP)	as of 6ES7 626-2DG02-0AB3
(C7-633/P)	as of 6ES7 633-1DF00-0AB3
(C7-633/DP)	as of 6ES7 633-2BF00-0AB3
(C7-634/P)	as of 6ES7 634-1DF00-0AB3
(C7-634/DP)	as of 6ES7 634-2BF00-0AB3
C7-635 Key	as of 6ES7 635-2EC00-0AB3
C7-635 Touch	as of 6ES7 635-2EB00-0AB3
C7-636 Key	as of 6ES7 636-2EC00-0AB3
C7-636 Touch	as of 6ES7 636-2EB00-0AB3

Installation in a rack

With standard and compact CPU modules, the TIM can be inserted into any of the racks 0 to 3 but only in expansion racks 1 to 3 if these racks are connected to the CPU over the IM 360/IM 361 interface modules.

With the C7 control systems, the TIM can be inserted in any of the expansion racks 1 to 3. These are connected to the C7 device over IM 360/IM 361 interface modules (the IM 360 is already integrated in the C7 device). With the C7-635 and C7-636 devices, this is also possible without the IM 361 if no more than four modules including the TIM are connected externally.

For all S7-300 racks the following applies: All slots designed for SM, FM or CP can also be used for the TIM.

A bus module connector ships with every TIM. The TIM is connected to the module to its left by the bus module connector.

If a SINAUT modem of the type MD2, MD3 or MD4 is used, this can be installed on a separate S7-300 rail or on a 35 mm DIN rail (an adapter is available). To save space, it can also be installed in a free slot of racks 0 to 3. This modem is connected over the RS-232 port of the TIM using a standard connecting cable, type 6NH7701-xxx.

NOTICE
Since the modem does not have an S7-300 backplane bus, an S7-300 SM, FM or CP module that communicates with the CPU over this backplane bus must not be installed to the right of the modem!

Note

In all of the sample configurations of the S7-300, it is assumed that a 24 V power supply is available for the CPU, the TIMs and the other modules.

S7-300 with one WAN attachment

For information on configuring a SIMATIC S7-300 with 1 connection to a classic WAN, see Installing the TIM 3V-IE variants in an S7-300 (Page 101).

S7-300 with two WAN attachments

If an S7-300 require two connections to classic WAN networks, a TIM 4 can be installed. Two WANs can be connected over the two RS-232/RS-485 interfaces of the TIM 4, for example over SINAUT MD2 / MD3 modems for dedicated line and telephone network. The following figure shows such a configuration.

The following figure shows a configuration in which the modem is installed at the extreme right in rack 0.

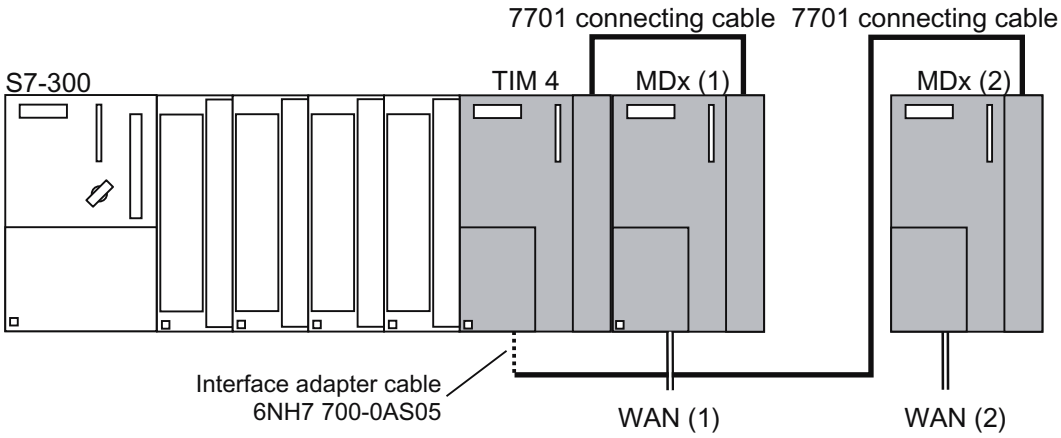

Figure 3-17 SIMATIC S7-300 with TIM 4,
Two connections to WAN via external MDx modems

The achieve greater clarity, the TIM 4 and MDx (1) modem are installed directly beside each other in rack 0.

The TIM is connected to the module on the left using a bus module connector.

There is no bus module connector between the TIM and MDx (1) modem. The MDx (1) modem is connected to the RS-232/RS-485 interface X1 of the TIM 4R via a suitable 6NH7 701-xxx connecting cable.

In this example, the MDx (2) modem is installed on a DIN rail and is connected to the RS-232/RS-485 interface X3 of the TIM via the interface adapter cable 6NH7 700-0AS05 and a suitable 6NH7 701-xxx connecting cable. The interface adapter cable 6NH7 700-0AS05 ships with the TIM 4R / TIM 4RD.

Instead of the MDx SINAUT modem, other modems with an RS-232 or RS-485 interface can also be used, for example wireless devices or the SINAUT GSM modem MD720-3.

S7-300 with maximum configuration

The maximum number of TIMs that can installed in an S7-300 depends on the connection resources provided by the CPU. Two connection resources per TIM are required on the CPU.

Apart from the connection resources, the available work memory on the CPU must also be taken into consideration. The more TIMs installed and the more stations connected and the more objects processed per station, the greater the memory requirements of the telecontrol-specific user program on the CPU. This program is put together with blocks from the SINAUT TD7 software package (TD7onCPU).

3.8 Standalone TIM 4 with an S7-400 or PC

Introduction

In standalone mode, in other words, without an S7-300-CPU, the TIM 4R / TIM 4RD is ideally suited as a SINAUT communications processor for a SIMATIC S7-400 or for the PC of the ST7cc or ST7sc control center. They are then linked over the MPI port of the TIM 4.

Installation

When used as a standalone, the TIM 4 is normally installed on a separate S7-300 standard rail, when necessary along with a power supply module to supply the TIM with 24 V. If the SINAUT MD2, MD3 or MD4 modems are used, they can also be installed on the same rail. The bus module connector supplied with every TIM is not required here since the TIM and modem are always interconnected over the 6NH7701-xxx connecting cable.

TIM 4 with SIMATIC S7-400

All the S7-400 CPUs listed below are suitable for connecting the TIM 4 over MPI. The list also includes older CPU types that can no longer be ordered as new devices but that nevertheless may still be in use in the field. These are shown in parentheses.

CPU 412-1	as of 6ES7 412-1XF00-0AB0	(Version 02)
CPU 412-2	as of 6ES7 412-2XG00-0AB0	(Version 01)
(CPU 413-1)	as of 6ES7 413-1XG00-0AB0	(Version 02)
(CPU 413-2)	as of 6ES7 413-2XG00-0AB0	(Version 03)
(CPU 414-1)	as of 6ES7 414-1XG00-0AB0	(Version 02)
CPU 414-2	as of 6ES7 414-2XG00-0AB0 as of 6ES7 414-2XJ00-0AB0	(version 03) (version 01)
CPU 414-3[1)]	as of 6ES7 414-3XJ00-0AB0	(Version 01)
(CPU 416-1)	as of 6ES7 416-1XJ00-0AB0	(Version 02)
CPU 416-2	as of 6ES7 416-2XK00-0AB0 (as of 6ES7 416-2XL00-0AB0)	(version 01) (version 01)
CPU 416-3	as of 6ES7 416-3XL00-0AB0	(Version 01)
CPU 416F-2	as of 6ES7 416-2FK02-0AB0	(Version 01)
CPU 417-4[1)]	as of 6ES7 417-4XL00-0AB0	

[1)] Fault-tolerant SINAUT solutions with a CPU 414-4H or CPU 417-4H are not possible!

Note

A TIM 4 can be connected not only to a S7-400-CPU over its MPI port, but in principle with every S7-300 CPU, in other words, also with the CPU types 317, 318 and 319 and with the CPU 315-2 PN/DP with which a TIM 4 cannot be installed as a CP in the S7-300 rack.

S7-400 with one WAN attachment

The following figure shows the simplest configuration for an S7-400 with one connection to a WAN over a TIM 4.

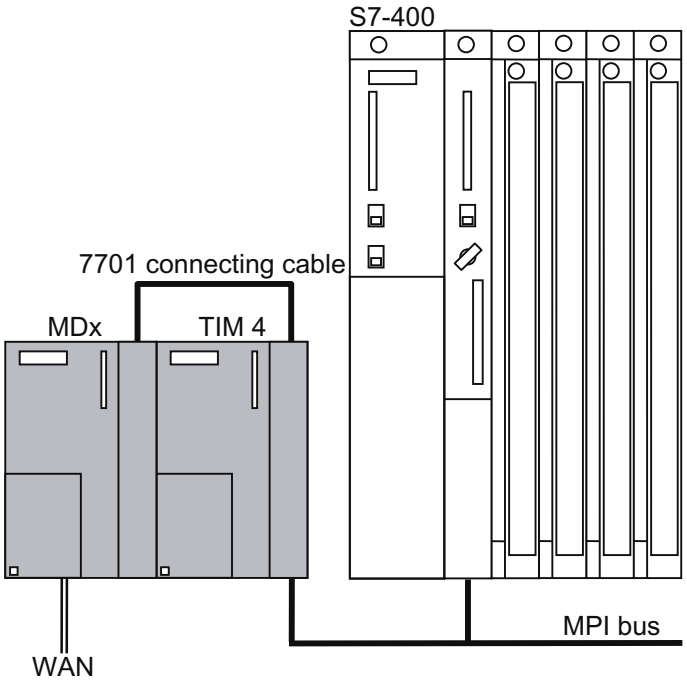

Figure 3-18 SIMATIC S7-400 with TIM 4 on MPI bus, 1 connection a WAN

A suitable modem or other transmission device can be connected to the combined RS-232/RS-485 interface of the TIM 4.

S7-400 with two WAN attachments

The TIM 4 and two MD2, MD3 or MD4 SINAUT modems are mounted on a separate S7-300 rail. The TIM 4 is connected to the CPU over its MPI interface. The following figure shows the configuration described.

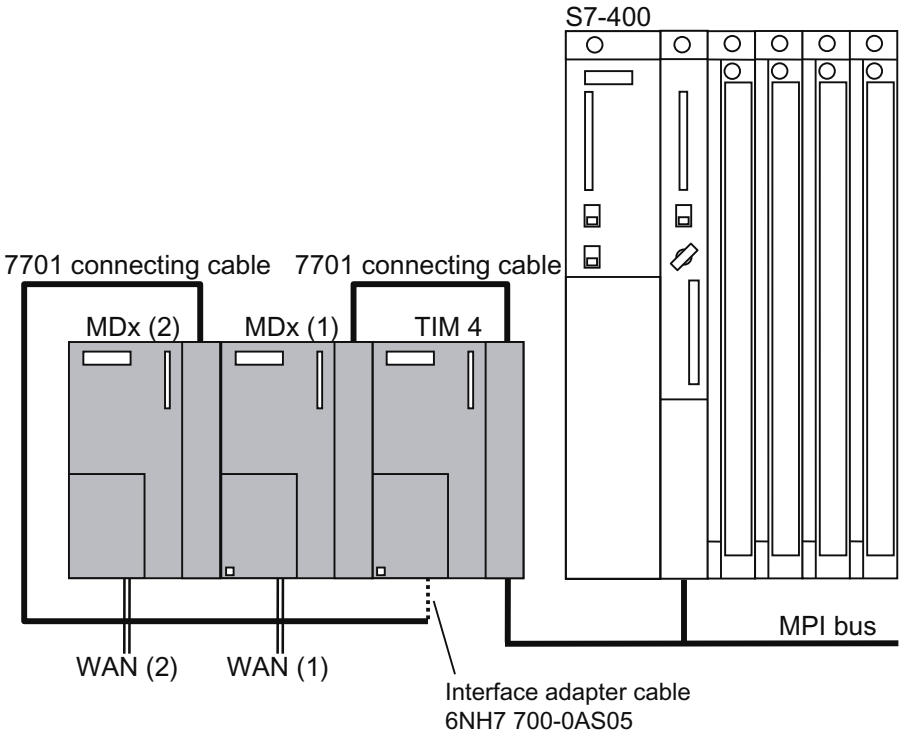

Figure 3-19 SIMATIC S7-400 with TIM 4 on the MPI bus,
Two connections to WAN via external MDx (1) and MDx (2) modems

Suitable modems or other transmission devices can be connected to the combined RS-232/RS-485 interfaces of the TIM 4. Instead of the MDx SINAUT modem, other modems with an RS-232 or RS-485 interface can also be used, for example wireless devices or the SINAUT GSM modem MD720-3.

S7-300 and S7-400 with common WAN attachment

Since a TIM 4 can communicate not only with one CPU but with several over MPI, a SINAUT station can also be configured as shown in the following figure. Here, it does not matter whether these CPUs are of the type S7-400 or S7-300.

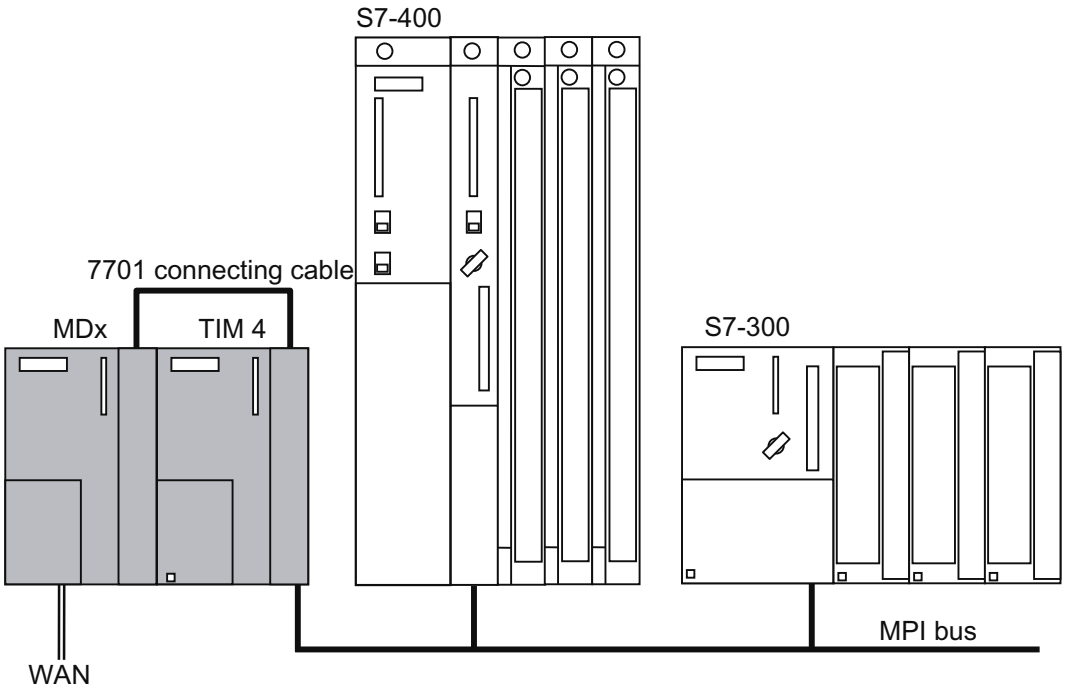

Figure 3-20 SIMATIC S7-400 and S7-300 with TIM 4 on MPI bus, 1 connection to WAN via MDx modem

In this configuration, the TIM 4 provides access to the WAN for both the S7-400 and the S7-300. This could, for example, be a large station in which the automation tasks are distributed to several PLCs.

S7-400 with maximum configuration

The maximum number of TIMs that can be connected to an S7-400 over MPI depends on the connection resources provided by the CPU. With an S7-400, one (1) connection resource is required per TIM. However, the available work memory of the CPU must also be taken into account; the more TIMs installed and stations connected, and the more objects processed per station, the greater the memory demands of the telecontrol-specific user program on the central CPU. This program is put together with blocks from the SINAUT TD7 software package (TD7onCPU).

Example of configurations with the SINAUT ST7cc or ST7sc control center systems

The SINAUT ST7cc control center system based on WinCC or the SCADA Connect Software SINAUT ST7sc is connected to the SINAUT telecontrol network just as with an S7-400 over one or more TIM 4 modules. These TIMs are connected to the MPI adapter of the SINAUT ST7cc / ST7sc system over their MPI interface. The inclusion of a telecontrol master, for example an S7-400 is not necessary. Data exchange with the stations is handled by the master TIM 4 modules.

The following figure shows the simplest configuration for a SINAUT ST7cc or ST7sc control center system with one (1) connection to a WAN.

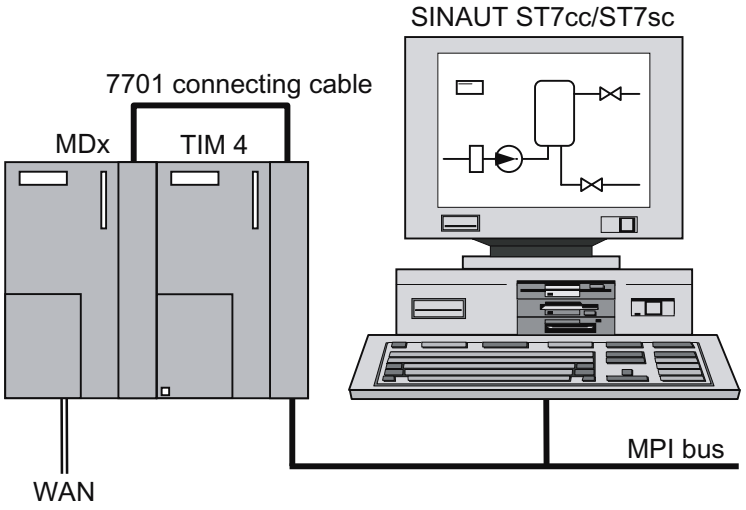

Figure 3-21 SINAUT ST7cc / ST7sc control center systems with TIM 4 on MPI bus, 1 connection to WAN via MDx modem

In much the same way as with an S7-400, ST7cc / ST7sc can also have two connections to a WAN. The following figure shows the configuration.

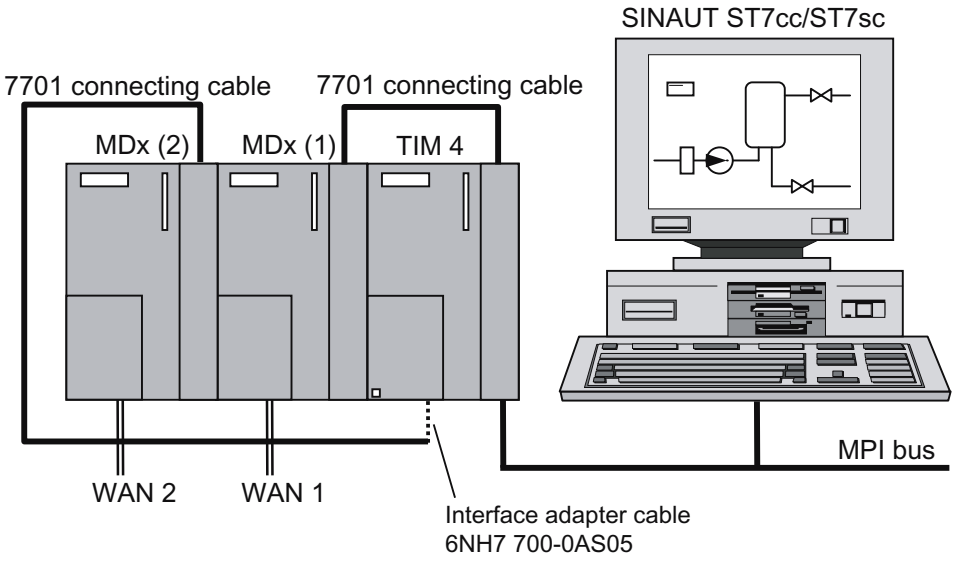

Figure 3-22 SINAUT ST7cc / ST7sc control center systems with TIM 4 on MPI bus, 2 connections to WAN via MDx (1) and MDx (2) modems

Other modems with an RS-232 or RS-485 interface can be used instead of the SINAUT MDx modems, for example wireless devices or the SINAUT GSM modem MD720-3. The RS-485 port of the TIM 4 also allows a star-shaped dedicated line network to be connected using several MD2 or MD3 SINAUT modems. You will find more information on this topic in the section "Installation and commissioning of a SINAUT modem".

Apart from the SINAUT ST7cc or ST7sc control center system, a local controller, for example an S7-400 can also be connected to MPI and exchange data with the stations in the telecontrol network. This controller could, for example, be used to display data received from the stations on a panel or console or for emergency input by an operator if ST7cc / ST7sc failed. The controller could also handle central control tasks such as starting up the system.

SINAUT ST7cc / ST7sc and the central controller are then both supplied with parallel data. Both can receive the same data or data specifically intended for one or the other. The transfer of commands, setpoints, parameters etc. to the stations in the telecontrol network is possible from both ST7cc / ST7sc and from the S7-400.

The following figure shows such a configuration with two WAN attachments.

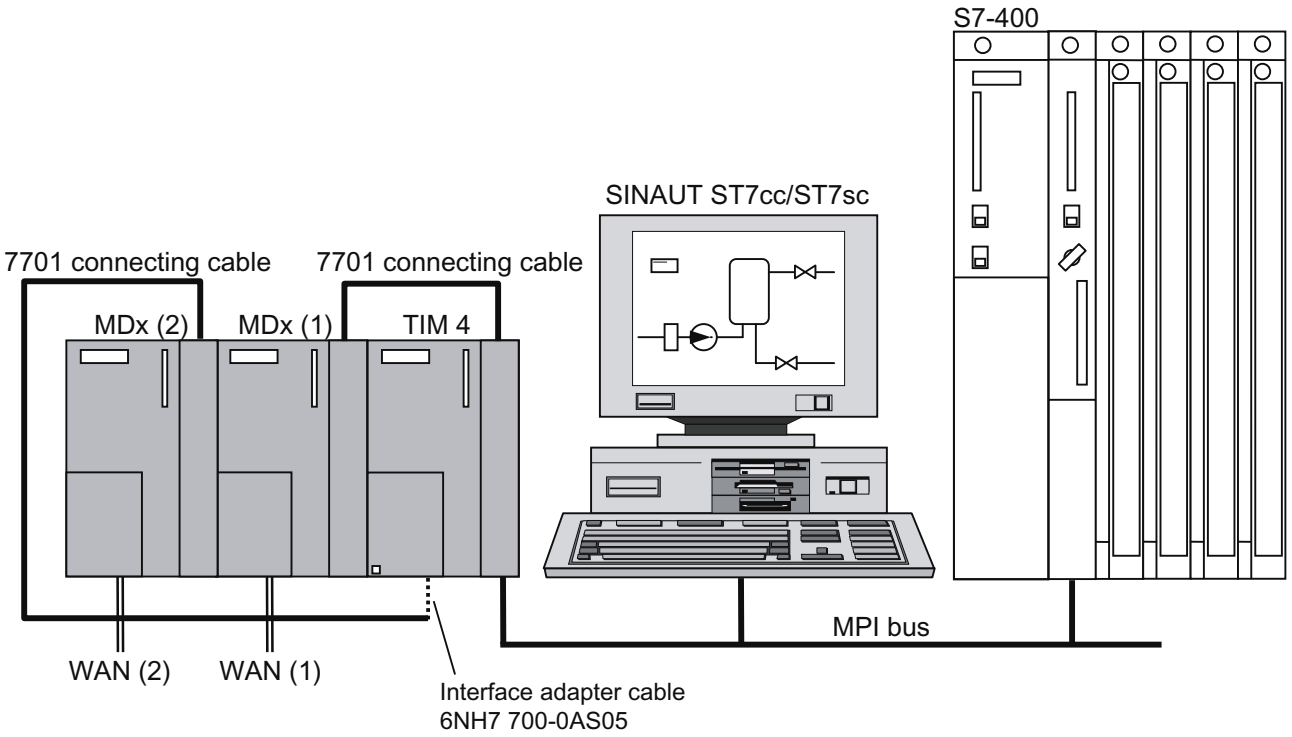

Figure 3-23 SINAUT ST7cc / ST7sc control center systems and SIMATIC S7-400 with TIM 4 on MPI bus, 2 connections to WAN via MDx (1) and MDx (2) modems

Note

The S7-400 is not required as a primary telecontrol master for ST7cc / ST7sc! Both devices are supplied directly with data by the TIM 4 independent of each other.

The maximum number of TIM 4 modules that can be connected to a SINAUT ST7cc / ST7sc control center system depends on the MPI interface card used in ST7cc / ST7sc.

Installing and putting a TIM into operation

4

NOTICE
Keep to the installation guide of the SIMATIC S7-300 Modules must be installed according to the installation guidelines of SIMATIC S7-300. You will find information on installation and wiring up in the Operating Instructions "SIMATIC S7-300, CPU 31xC and CPU 31x: Installation": You will find the operating instructions on the Internet, see also the references in the Appendix.

4.1 Design of the TIM 3V-IE variants

This section explains the design of the TIM 3V-IE variants.

4.1.1 Front view of the TIM 3V-IE variants with closed front panel

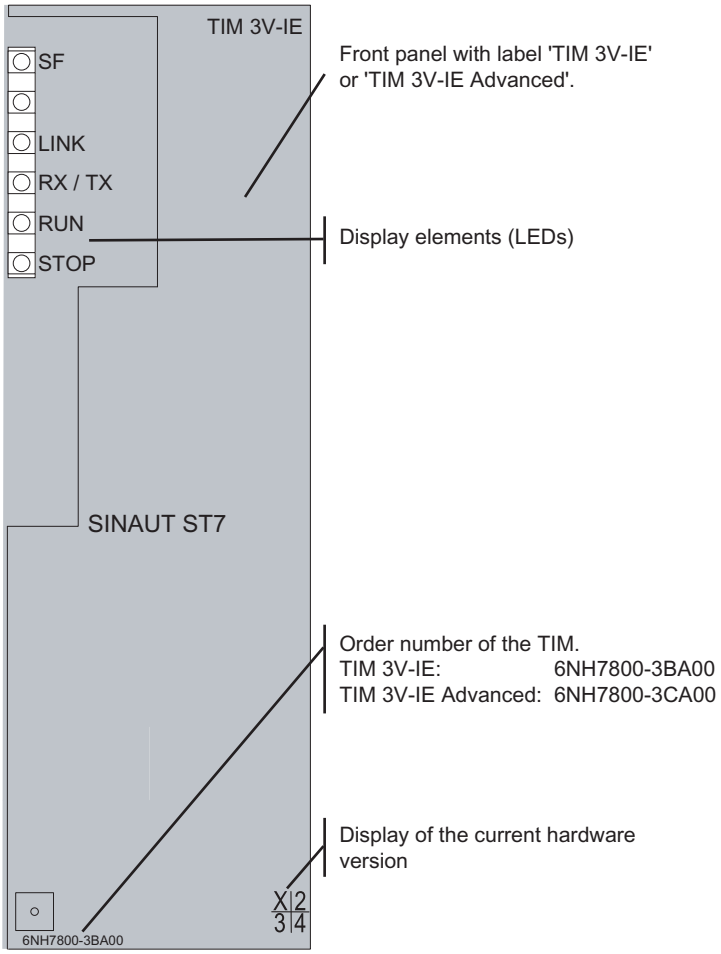

Figure 4-1 Front view of a TIM 3V-IE variant with closed front panel

4.1.2 Front view of the TIM 3V-IE variants with front panel removed

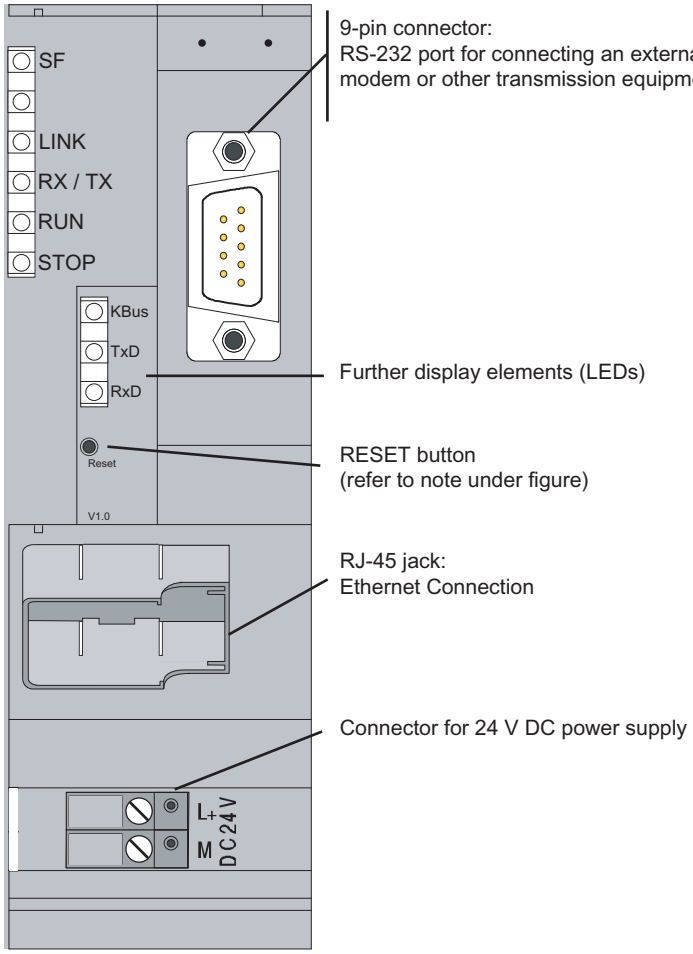

Figure 4-2 Front view of a TIM 3V-IE variant with front panel removed

For information on the RESET button, refer to "Default startup" in the section "Startup activities of the TIM 3V-IE variants".

4.1.3 LEDs of the TIM 3V-IE variants

The following table summarizes the meaning of the nine LEDs during normal operation. The display during startup is explained in the section "Startup activities of the TIM 3V-IE variants (Page 177)".

Table 4- 1 Meaning of the LEDs on the front panel of the TIM 3V-IE variants

LED no.	Labeling	Relevant TIM port	Description
1	SF	All	Group error Indicates missing or bad parameter settings and RAM errors.
2	None	-	-
3	LINK	Ethernet	Connection to Ethernet LED is lit when there is a physical connection to Ethernet. LED is off when there is no physical connection to Ethernet.
4	RX/TX	Ethernet	Data flow over Ethernet The display changes with each packet received or sent over Ethernet.
5	RUN	-	Module in RUN LED is lit when the module completes startup without error or is switched to RUN mode by the PG. LED is off when the module is switched to STOP mode by the PG
6	STOP	-	Module in STOP LED is lit when the module is switched to STOP mode by the PG. LED is off when the module is switched to RUN mode by the PG

Table 4- 2 Meaning of the LEDs behind the front panel of the TIM 3V-IE variants

LED no.	Labeling	Relevant TIM port	Type of WAN driver	Description
7	KBus	MPI / K bus	-	Data flow over MPI / backplane bus The display state changes with each message received or sent over MPI / backplane bus.
8	TxD	RS-232 interface	Dedicated line	Transmit data LED is lit constantly and is off while a message is being sent (TXD).
			Dial-up network	Transmit data No connection established: LED is off. Connection is established: LED is lit constantly and is off while a message is being sent (TXD).
9	RxD	RS-232 interface	Dedicated line	Receive data As long as receive level (DCD) is detected, the LED is lit and goes off while a message is being received (RXD).
			Dial-up network	Receive data Lights up with an incoming call (RI), remains lit as long as receive level (DCD) is detected and goes off while a message is being received (RXD).

4.1.4 Pinout of the ports

RS-232 interface

The connector for the RS-232 port is designed as a 9-pin D-sub miniature connector (male). The pinout is shown in the following table. As an RS-232 port, the pinout corresponds to that of a standardized PC connector.

Table 4- 3 Pinout of the RS-232 port connector for connecting an external modem

Illustration	Pin no.	Signal name	Signal direction	Remark
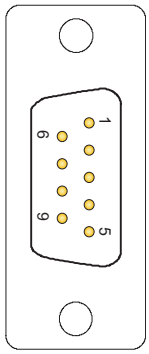	1	DCD	Input	
	2	RXD	Input	
	3	TXD	Output	
	4	DTR	Output	
	5	GND		
	6	-		
	7	RTS	Output	
	8	CTS	Input	
	9	-		

Ethernet port

The connector of the Ethernet port is designed as an 8-pin RJ-45 Western jack. The pinout is shown in the following table.

Table 4- 4 Pinout of the RJ-45 Western jack for the Ethernet port

Illustration	Pin no.	Signal name	Signal direction	Remark
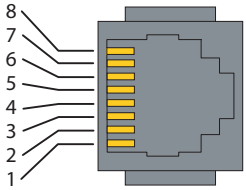	1	TXD+	Output	
	2	TXD-	Output	
	3	RXD+	Input	
	4	-		
	5	-		
	6	RXD-	Input	
	7	-		
	8	-		

4.1.5 Standard connecting cables for the TIM 3V-IE variants

An external modem or other transmission device can be connected to the 9-pin connector of the RS-232 port.
To connect to this connector, the following standard connecting cables are available.

Table 4- 5 Standard connecting cables for the RS-232 port of the TIM 3V-IE variants

Order no.	Description	Illustration
6NH7701-4AL	Cable for connecting the TIM 3V-IE (RS-232) to one of the SINAUT ST7 modems MD2, MD3 or MD4 (RS-232). Also suitable for linking these modems to a SIMATIC point-to-point CP such as the CP 340, CP 341 or CP 441 with RS-232 interface. Cable length 1.5 m	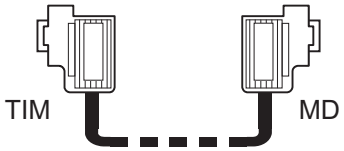
6NH7701-5AN	Cable for connecting the TIM (RS-232) to the GSM modem MD720-3 (RS-232). Also suitable for third-party modems or wireless devices with RS-232 standard. Cable length 2.5 m.	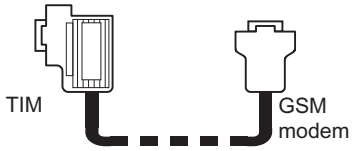
6NH7701-4BN	Cable with one end without connector for connecting the TIM (RS-232) to a third-party modem or wireless device (RS-232) Cable length 2.5 m	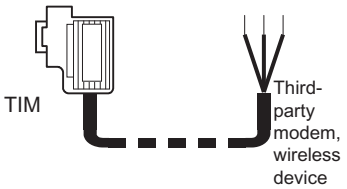
6NH7701-0AR	Test cable. Cable for connecting two TIM 3V-IE / TIM 4 / TIM 4R-IE modules over their RS-232 ports without modems (null modem). Cable length 6 m	

The following figures show the assembly of the connecting cables.

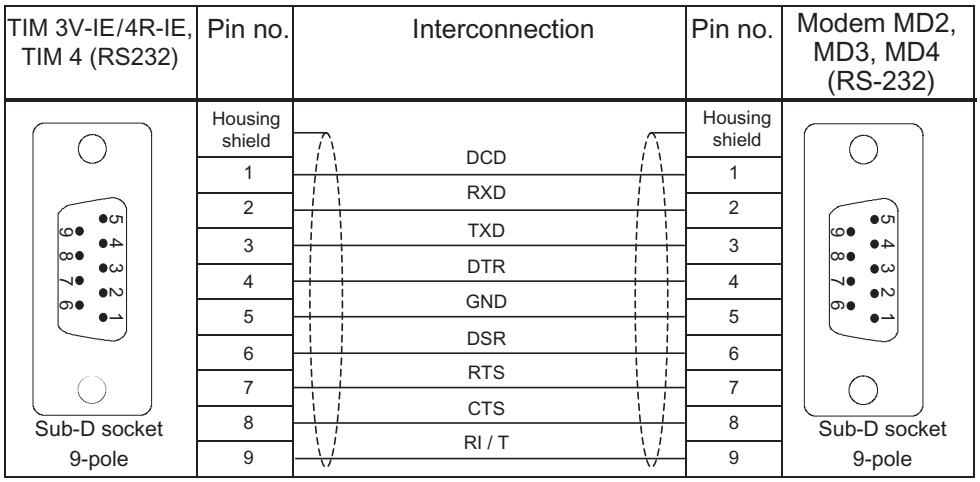

Figure 4-3 Assembly of the standard connecting cable 6NH7701-4AL

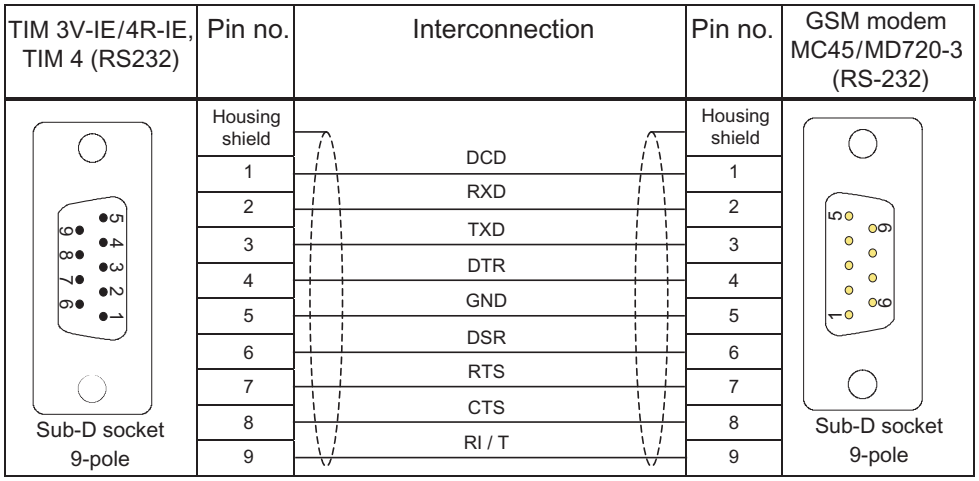

Figure 4-4 Assembly of the standard connecting cable 6NH7701-5AN

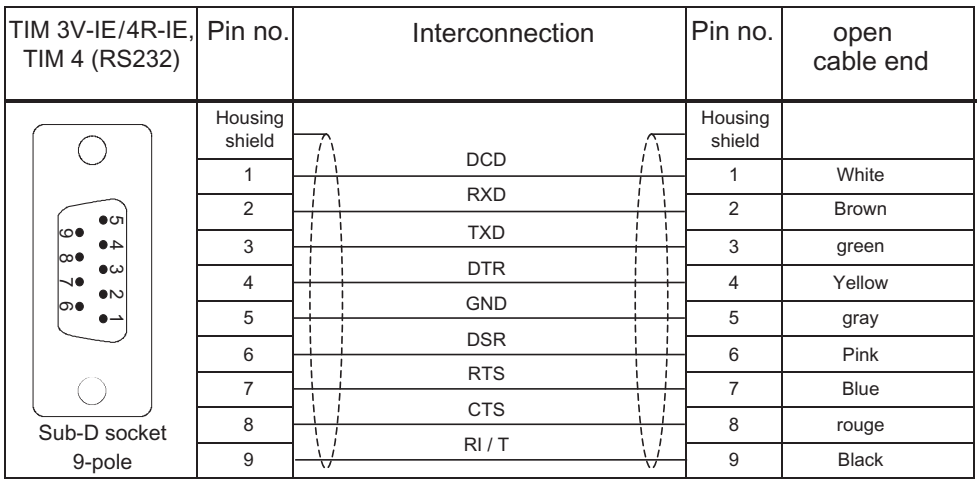

Figure 4-5 Assembly of the standard connecting cable 6NH7701-4BN

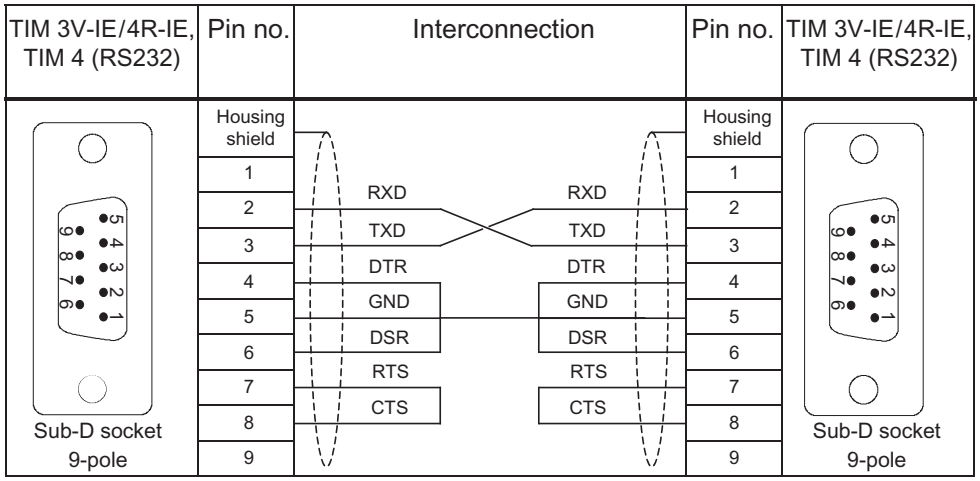

Figure 4-6 Assembly of the standard connecting cable 6NH7701-0AR

Connecting cables for connecting to Ethernet

There is no standard connecting cable available in the SINAUT range to connect the TIM 4R-IE to Ethernet. Use the suitable Ethernet connecting cables (for example IE TP Cord) from the SIMATIC NET product range (catalog IK PI).

If a TIM 4R IE is connected to a hub, switch or router, it is advisable to use fully shielded straight-through patch cables with RJ-45 connectors and 1:1 pin assignment. The cable must be suitable for the 10Base-TX or 100Base-TX specification.

Two Ethernet TIMs (TIM 4R-IE, TIM 3V-IE variant) can also be connected over Ethernet as a point-to-point link using a crossover patch cable with RJ-45 connectors at both ends and the following pinout:

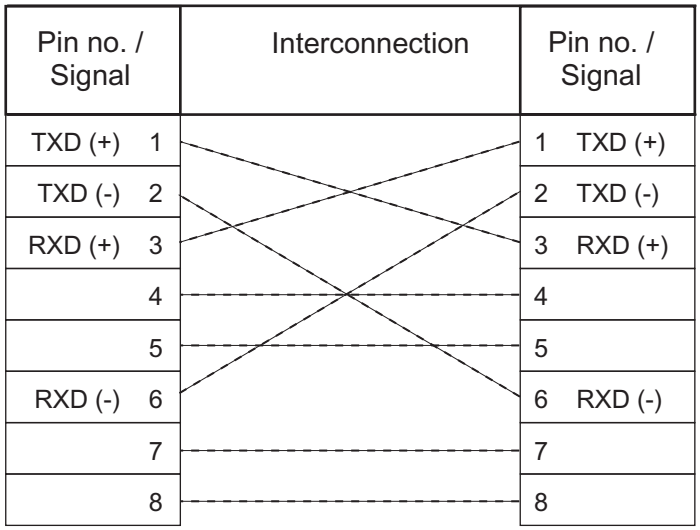

Figure 4-7 Pinout of a crossover Ethernet RJ-45 cable

The cable must be suitable for the 10Base-TX or 100Base-TX specification.

4.2 Design of the TIM 4R-IE

4.2.1 Front view of the TIM 4R-IE with closed front panel

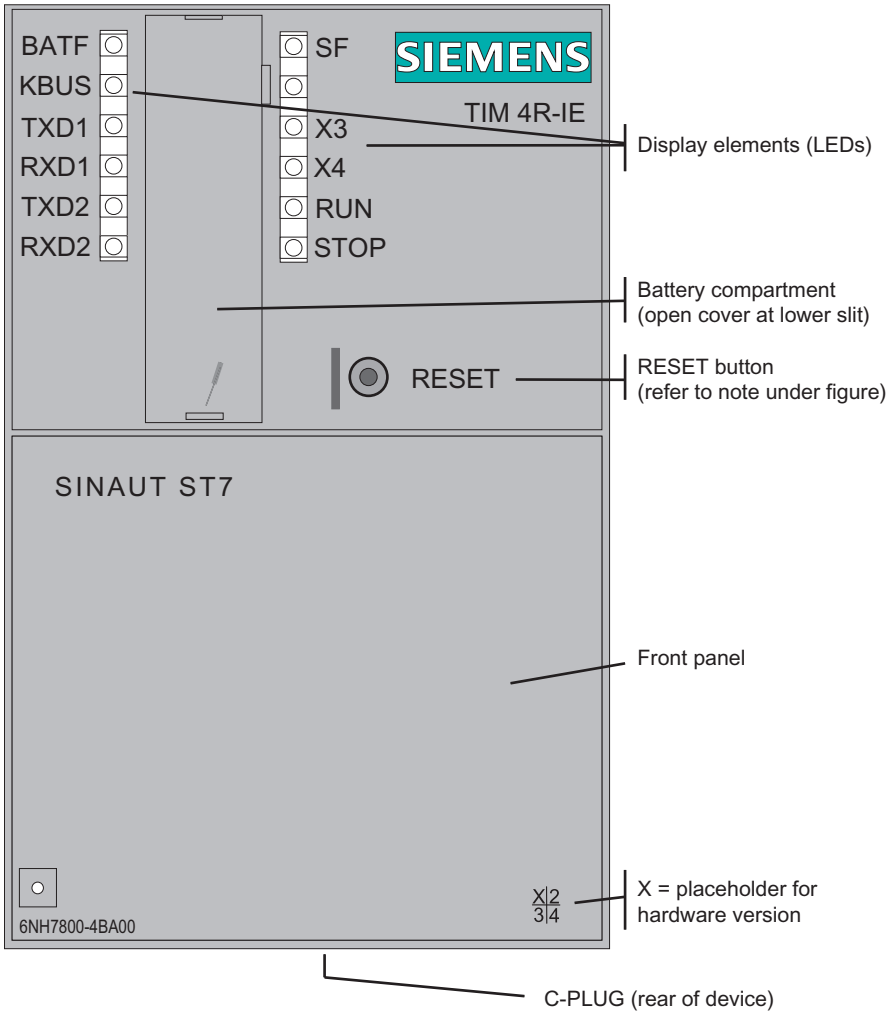

Figure 4-8 Front view of the TIM 4R-IE with closed front panel

For information on the RESET button, refer to "Default startup" in the section Startup activities of the TIM 4R-IE (Page 179).

4.2.2 Front view of the TIM 4R-IE with removed front panel

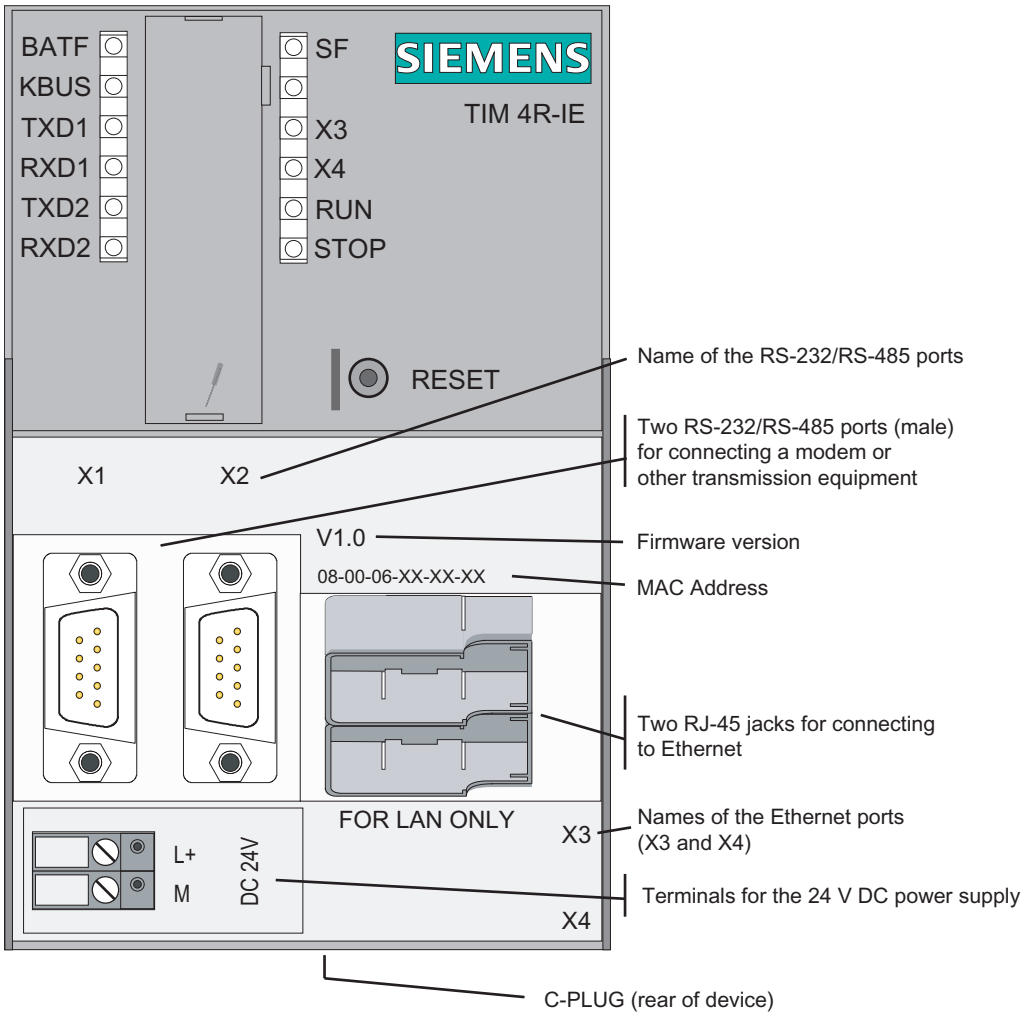

Figure 4-9 Front view of the TIM 4R-IE with removed front panel

On the rear of the housing, there is an opening for the optional C-PLUG. The configuration data of the TIM 4R-IE can be stored on the C-PLUG. If service is required, a standalone TIM can be replaced without needing a PG.

4.2.3 LEDs of the TIM 4R-IE

The following table summarizes the meaning of the LEDs during normal operation. The display during startup is explained in the section "Startup activities of the TIM 4R-IE (Page 179)".

Table 4- 6 Meaning of the LEDs on the front panel of the TIM 4R-IE

LED no.	Labeling	Relevant TIM port	Type of WAN driver	Description
1	BATF	All	-	If there is a functioning battery installed, the LED is off. The LED lights up red if the battery is not inserted in the battery compartment or if the battery voltage is too low.
2	KBus	K bus	-	Data flow over the backplane bus The display state changes with each message received or sent over the backplane bus.
3	TXD1	RS-232 interface 1	Dedicated line	Transmit data LED is lit constantly and is off while a message is being sent (TXD).
			Dial-up network	Transmit data No connection established: LED is off. Connection is established: LED is lit constantly and is off while a message is being sent (TXD).
4	RXD1	RS-232 interface 1	Dedicated line	Receive data As long as receive level (DCD) is detected, the LED is lit and goes off while a message is being received (RXD).
			Dial-up network	Receive data Lights up with an incoming call (RI), remains lit as long as receive level (DCD) is detected and goes off while a message is being received (RXD).
5	TXD2	RS-232 interface 2	Dedicated line	Transmit data LED is lit constantly and is off while a message is being sent (TXD).
			Dial-up network	Transmit data No connection established: LED is off. Connection is established: LED is lit constantly and is off while a message is being sent (TXD).

LED no.	Labeling	Relevant TIM port	Type of WAN driver	Description
6	RXD2	RS-232 interface 2	Dedicated line	Receive data As long as receive level (DCD) is detected, the LED is lit and goes off while a message is being received (RXD).
			Dial-up network	Receive data Lights up with an incoming call (RI), remains lit as long as receive level (DCD) is detected and goes off while a message is being received (RXD).

Table 4- 7 Meaning of the LEDs on the right of the front panel of the TIM 4R-IE

LED no.	Labeling	Relevant TIM port	Description
7	SF	All	Group error Indicates missing or bad parameter settings and RAM errors.
8	-	-	-
9	P 1	Ethernet	Connection to Ethernet (interface 1) LED lights up yellow if there is a physical connection to Ethernet. Green flashing LED indicates data flow. LED is off when there is no physical connection to Ethernet.
10	P 2	Ethernet	Connection to Ethernet (interface 2) LED lights up yellow if there is a physical connection to Ethernet. Green flashing LED indicates data flow. LED is off when there is no physical connection to Ethernet.
11	RUN	-	Module in RUN LED is lit when the module completes startup without error or is switched to RUN mode by the PG. LED is off when the module is switched to STOP mode by the PG.
12	STOP	-	Module in STOP LED is lit when the module is switched to STOP mode by the PG. LED is off when the module is switched to RUN mode by the PG.

4.2.4 Pinout of the ports

RS-232/RS-485 interfaces

The plugs for the two serial ports are designed as a 9-pin D-sub miniature connectors (male). The pinout of the two connectors is identical and is shown in the following table. As an RS-232 port, the pinout corresponds to that of a standardized PC connector.

This is a combined RS-232/RS-485 port. As default, the ports are set to RS-232. The switchover to RS-485 is set in the SINAUT configuration in NetPro and is therefore part of the configuration data of the TIM 4R-IE.

Table 4- 8 Pinout of the connector of the combined RS-232/RS-485 port

Illustration	Pin no.	Signal name	Signal direction	Remark
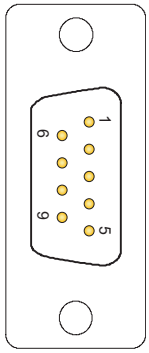	1	DCD	Input	
	2	RXD	Input	Switching over to RS-485 in the configuration
	3	TXD	Output	Switching over to RS-485 in the configuration
	4	DTR	Output	
	5	GND		
	6	-		
	7	RTS	Output	
	8	CTS	Input	
	9	-		

Ethernet ports

The two Ethernet ports are designed as 8-pin RJ-45 Western jacks. The pinout is shown in the following table.

Table 4- 9 Pinout of the RJ-45 Western jack for the Ethernet port

Illustration	Pin no.	Signal name	Signal direction	Remark
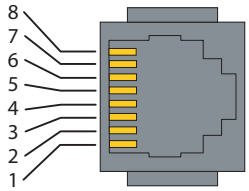	1	TXD+	Output	
	2	TXD-	Output	
	3	RXD+	Input	
	4	-		
	5	-		
	6	RXD-	Input	
	7	-		
	8	-		

4.2.5 Standard connecting cables for the TIM 4R-IE

A modem or other transmission device can be connected to the 9-pin connector of the RS-232/RS-485 port. The following standard connecting cables are available for connection to these connectors.

Table 4- 10 Standard connecting cables for the serial port of the TIM 4R-IE

Order no.	Description	Illustration
6NH7701-4AL	Cable for connecting the TIM 3V-IE (RS-232) to one of the SINAUT ST7 modems MD2, MD3 or MD4 (RS-232). Also suitable for linking these modems to a SIMATIC point-to-point CP such as the CP 340, CP 341 or CP 441 with RS-232 interface. Cable length 1.5 m	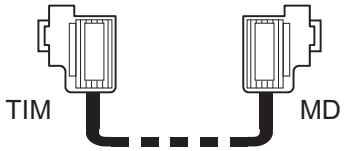
6NH7701-4DL	Cable for connecting a TIM 4R-IE / TIM 4 (RS-485) with multiple SINAUT ST7 dedicated line modems connected in parallel of the type MD2 or MD3 (RS-485). Cable length 1.5 m	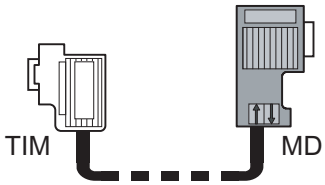
6NH7701-5AN	Cable for connecting the TIM (RS-232) to the GSM modem MD720-3 (RS-232). Also suitable for third-party modems or wireless devices with RS-232 standard. Cable length 2.5 m.	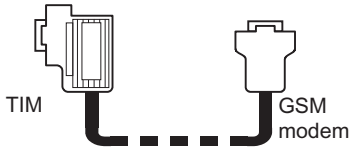
6NH7701-4BN	Cable with one end without connector for connecting the TIM (RS-232) to a third-party modem or wireless device (RS-232) Cable length 2.5 m	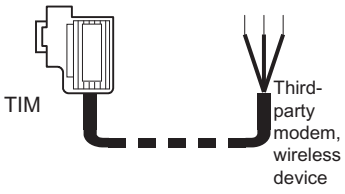
6NH7701-0AR	Test cable. Cable for connecting two TIM 3V-IE / TIM 4 / TIM 4R-IE modules over their RS-232 ports without modems (null modem). Cable length 6 m	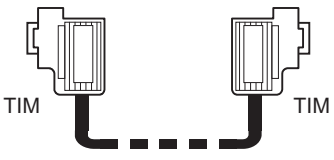

The following figures show the assembly of the connecting cables.

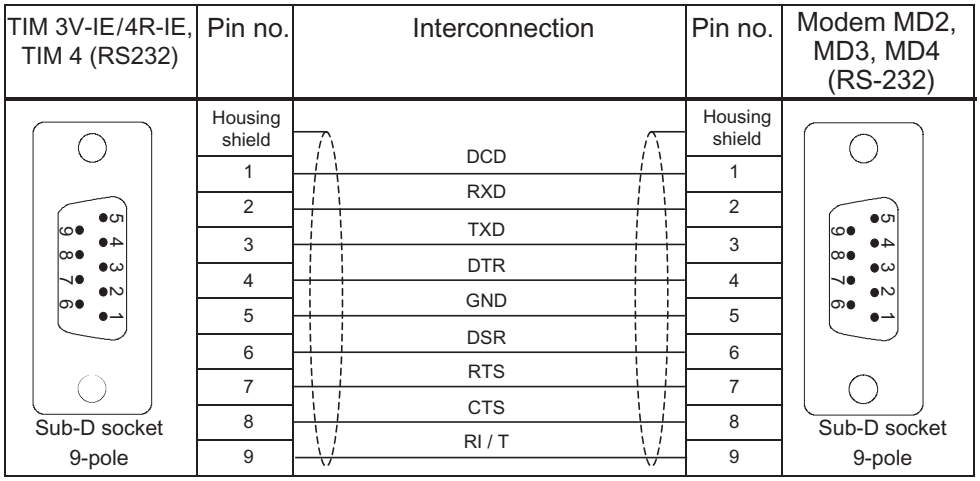

Figure 4-10 Assembly of the standard connecting cable 6NH7701-4AL

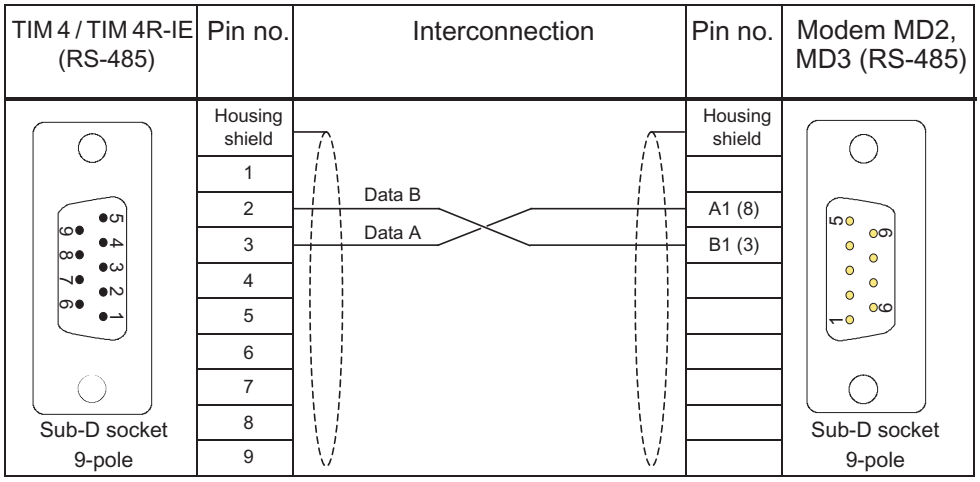

Figure 4-11 Assembly of the standard connecting cable 6NH7701-4DL

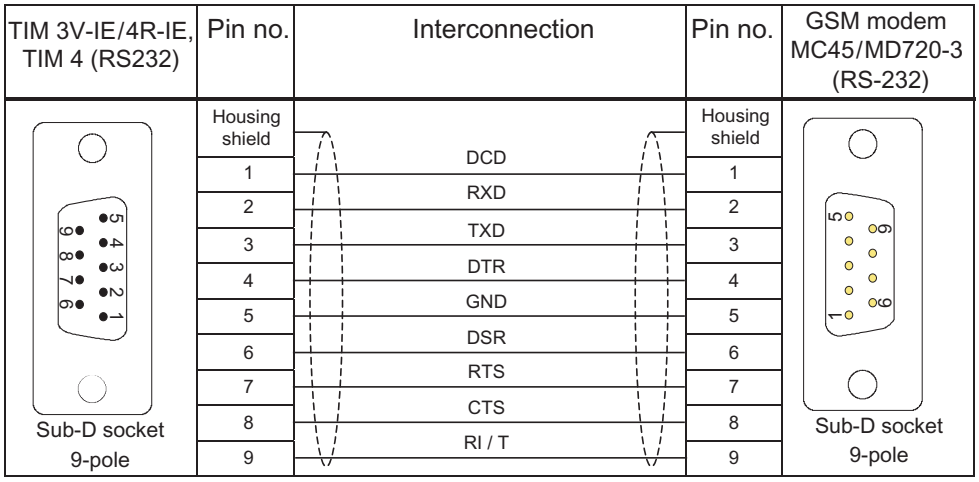

Figure 4-12 Assembly of the standard connecting cable 6NH7701-5AN

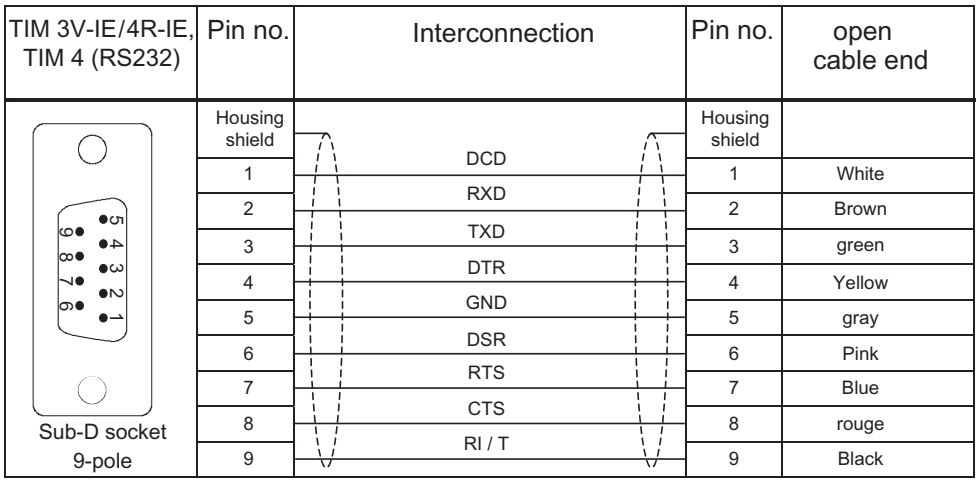

Figure 4-13 Assembly of the standard connecting cable 6NH7701-4BN

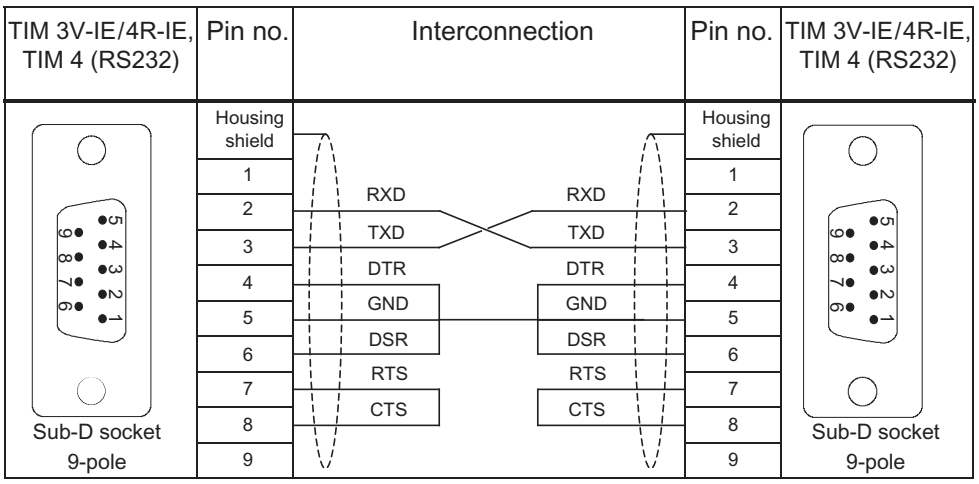

Figure 4-14 Assembly of the standard connecting cable 6NH7701-0AR

Connecting cables for connecting to Ethernet

There is no standard connecting cable available in the SINAUT range to connect the TIM 4R-IE to Ethernet. Use the suitable Ethernet connecting cables (for example IE TP Cord) from the SIMATIC NET product range (catalog IK PI).

If a TIM 4R IE is connected to a hub, switch or router, it is advisable to use fully shielded straight-through patch cables with RJ-45 connectors and 1:1 pin assignment. The cable must be suitable for the 10Base-TX or 100Base-TX specification.

Two Ethernet TIMs (TIM 4R-IE, TIM 3V-IE variant) can also be connected over Ethernet as a point-to-point link using a crossover patch cable with RJ-45 connectors at both ends and the following pinout:

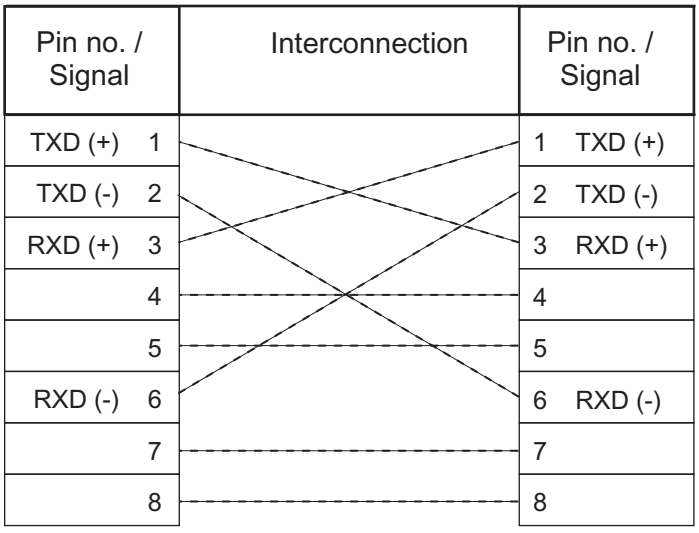

Figure 4-15 Pinout of a crossover Ethernet RJ-45 cable

The cable must be suitable for the 10Base-TX or 100Base-TX specification.

4.3 Design of the TIM 3 and TIM 4 modules

Introduction

This section explains the structure of the TIM 4R / TIM 4RD.

The options for connecting up and settings are also included in the following sections.

4.3.1 Front view of the TIM 4 with closed front panels

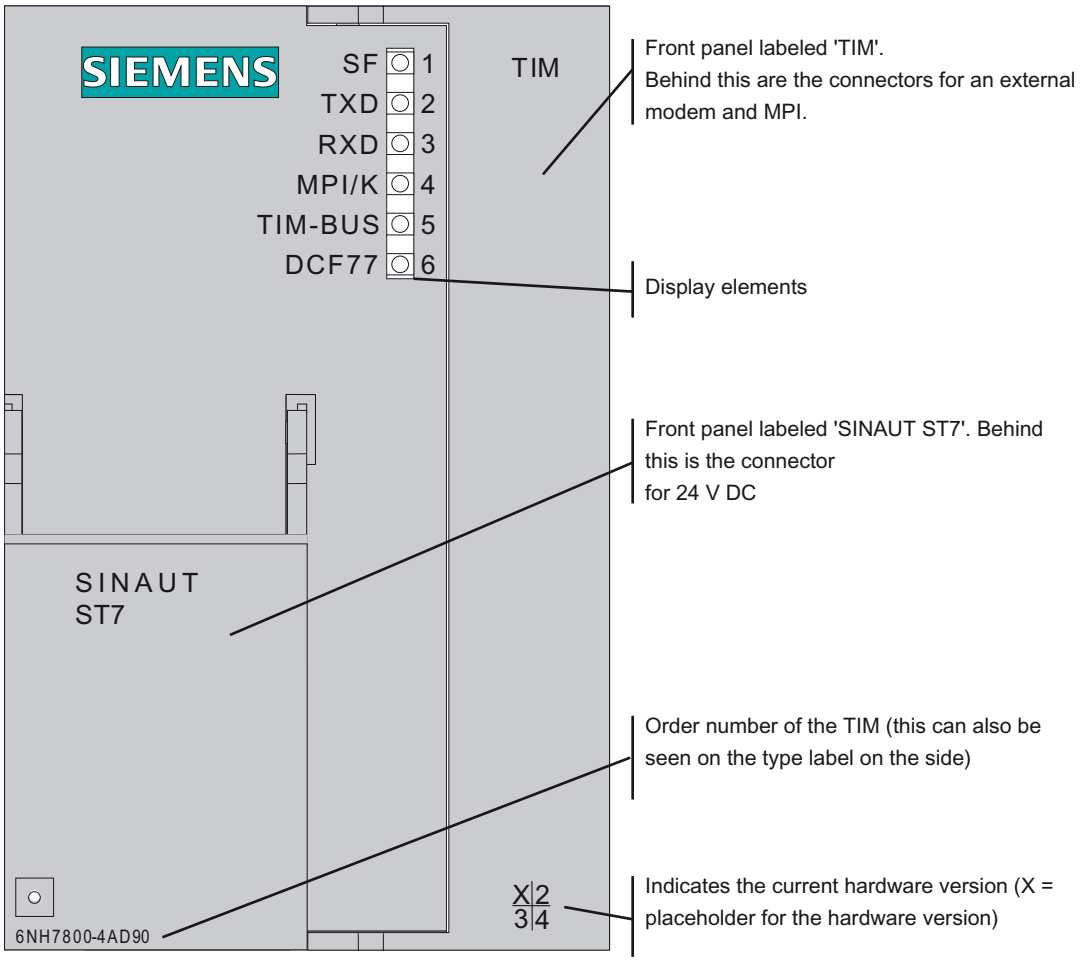

Figure 4-16 Front view of the TIM with closed front panels

4.3.2 Front view of the TIM 4 with removed front panels

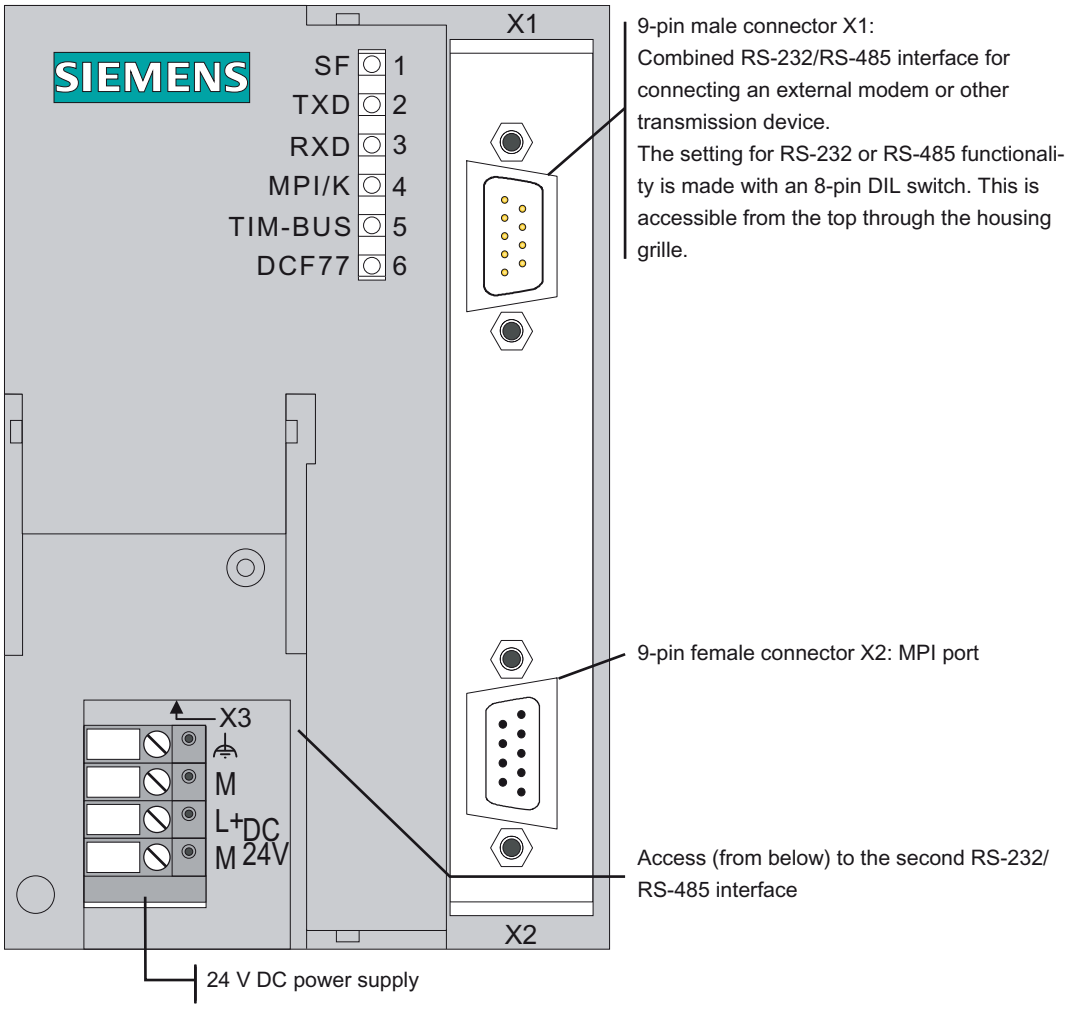

Figure 4-17 Front view of the TIM with removed front panels

For information on the RESET button, refer to "Default startup" in the section "Startup activities of the TIM 4".

4.3.3 LEDs of the TIM 3 / TIM 4

The following table summarizes the meaning of the six LEDs during normal operation. The display during startup is explained in the section "Startup activities of the TIM 3 and TIM 4 (Page 182)".

Table 4- 11 Meaning of the LEDs on the front panel of the TIM 4

LED no.	Labeling	Relevant TIM port	Type of WAN driver	Description
1	SF	All	-	Group error Indicates missing or bad parameter settings and RAM errors.
2	TXD	Internal modem interface	Not relevant	See note below
3	RXD	Internal modem interface	Not relevant	See note below
4	MPI / K	MPI / K bus	-	Data flow over MPI / backplane bus The display state changes with each message received or sent over MPI / backplane bus.
5	TIM-BUS	TIM-Bus	-	(not currently used)
6	DCF77	DCF77 radio clock	-	Status of the DCF77 clock (if installed) As long as the time of day is clear, the LED is lit constantly and is sampled briefly at second intervals.

Note

If the TIM sends or receives data over its external modem interface, this is not indicated by the TXD and RXD LEDs of the TIM. In this case, the LEDs of the external modem provide information about the current send and receive activities of the external interface.

4.3.4 Pinout of the X1 and X2 connectors

The X1 connector is designed as a 9-pin D-sub miniature male connector. The pinout is shown in the following table. As an RS-232 port, the pinout corresponds to that of a standardized PC connector.

The connector can be configured either as an RS-232 or as an RS-485 port using the 8-pin DIL switch available from above through the grill in the housing.

Table 4- 12 PIN assignment of the X1 connector for connecting and external modem

Illustration	Pin no.	Signal name	Signal direction	Remark
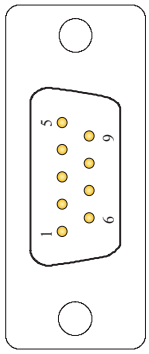	1	DCD	Input	
	2	RXD	Input	Pin with 8-pin DIL switch can be set to RS-485
	3	TXD	Output	Pin with 8-pin DIL switch can be set to RS-485
	4	DTR	Output	
	5	GND		
	6	DSR	Input	
	7	RTS	Output	
	8	CTS	Input	
	9	RI / T	Input	

The X2 MPI connector is designed as a 9-pin D-sub miniature female connector. The pinout is shown in the following table.

Table 4- 13 Pinout of the X2 MPI connector

Illustration	Pin no.	Signal name	Signal direction	Remark
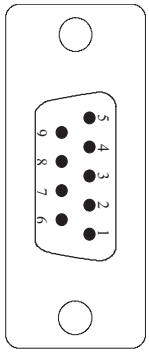	1			
	2			
	3	Data B	Bidirectional	
	4	RTS-OUT	Output	PG control signal
	5	M5	-	0 V for bus termination in connector
	6	P5	-	5 V for bus termination in connector
	7			
	8	Data A	Bidirectional	
	9			

Note

The MPI connector does not supply 24 V for external devices. TS adapters and MPI adapter cables for laptops cannot therefore be connected.

4.3.5 Standard connecting cables that can be connected to connector X1

An external modem or other transmission device can be connected to the 9-pin X1 connector of the combined RS-232/RS-485 interface.
To connect to connector X1, the following standard connecting cables are available.

Table 4- 14 Connectable standard cables for all TIM 4 modules

Order no.	Description	Illustration
6NH7701-4AL	Cable for connecting the TIM 3V-IE (RS-232) to one of the SINAUT ST7 modems MD2, MD3 or MD4 (RS-232). Also suitable for linking these modems to a SIMATIC point-to-point CP such as the CP 340, CP 341 or CP 441 with RS-232 interface. Cable length 1.5 m	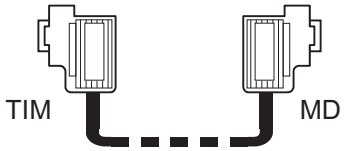
6NH7701-4DL	Cable for connecting a TIM 4R-IE / TIM 4 (RS-485) with multiple SINAUT ST7 dedicated line modems connected in parallel of the type MD2 or MD3 (RS-485). Cable length 1.5 m	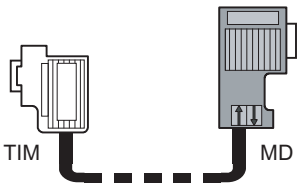
6NH7701-5AN	Cable for connecting the TIM (RS-232) to the GSM modem MD720-3 (RS-232). Also suitable for third-party modems or wireless devices with RS-232 standard. Cable length 2.5 m.	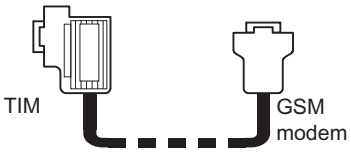
6NH7701-4BN	Cable with one end without connector for connecting the TIM (RS-232) to a third-party modem or wireless device (RS-232) Cable length 2.5 m	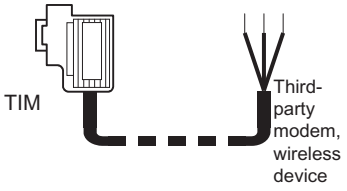
6NH7701-0AR	Test cable. Cable for connecting two TIM 3V-IE / TIM 4 / TIM 4R-IE modules over their RS-232 ports without modems (null modem). Cable length 6 m	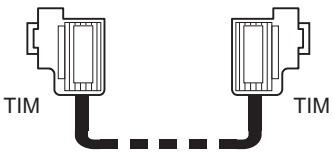

If an MD2 or MD3 dedicated line modem is connected to the X1 connector, it is possible to operate several of these dedicated line modems connected in parallel over this connector (the port must then be switched to RS-485 functionality). This allows a dedicated line star network to be connected to the X1 connector. For more detailed information, refer to the sections with the network examples.

The following figures show how the connecting cables listed above are assembled.

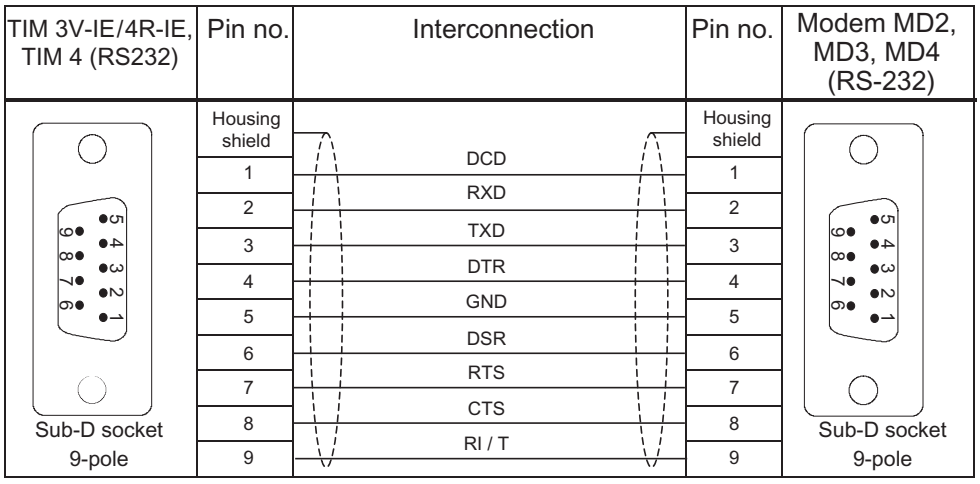

Figure 4-18 Assembly of the standard connecting cable 6NH7701-4AL

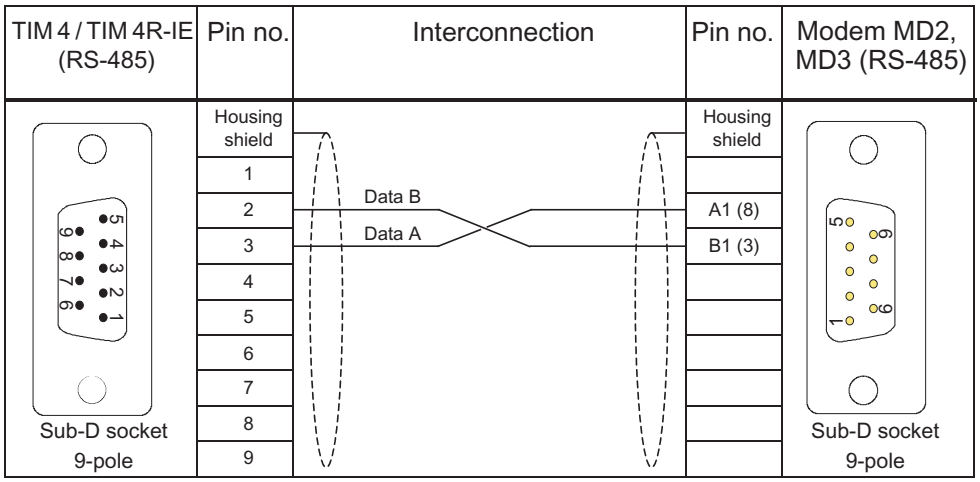

Figure 4-19 Assembly of the standard connecting cable 6NH7701-4DL

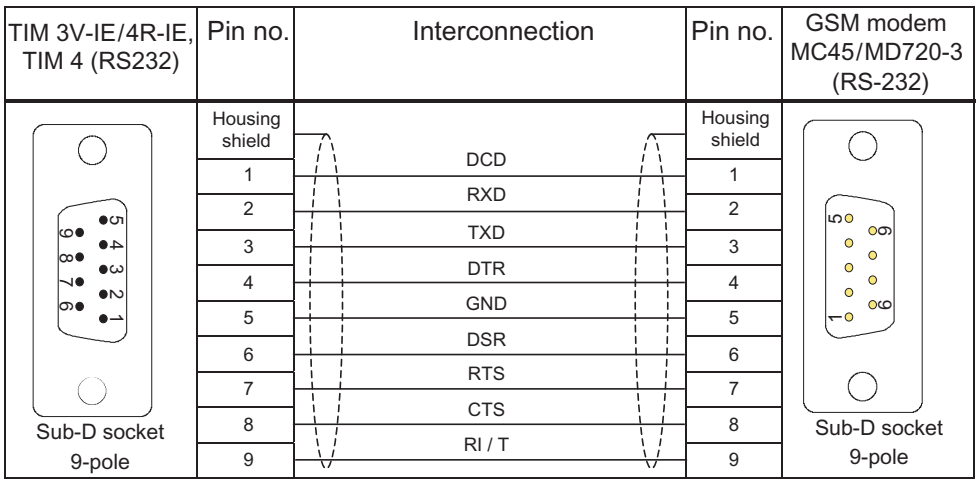

Figure 4-20 Assembly of the standard connecting cable 6NH7701-5AN

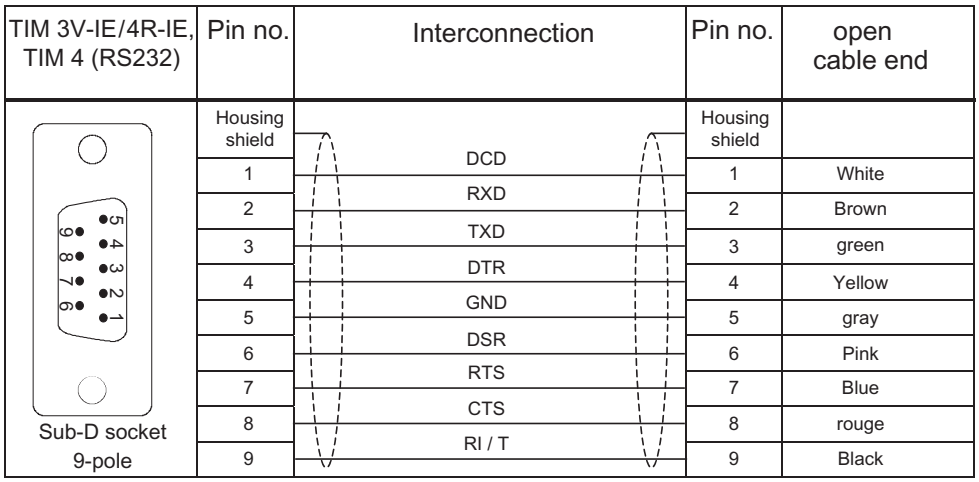

Figure 4-21 Assembly of the standard connecting cable 6NH7701-4BN

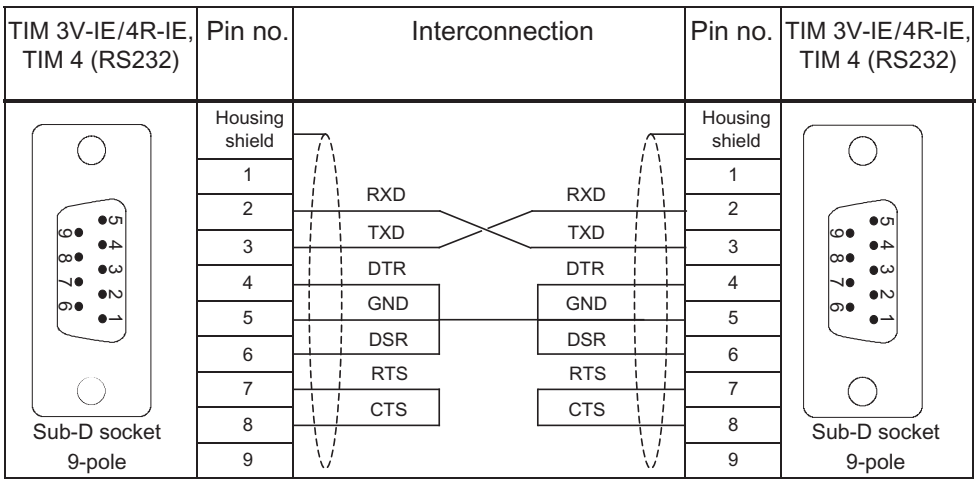

Figure 4-22 Assembly of the standard connecting cable 6NH7701-0AR

4.3.6 View of the TIM 4 from above

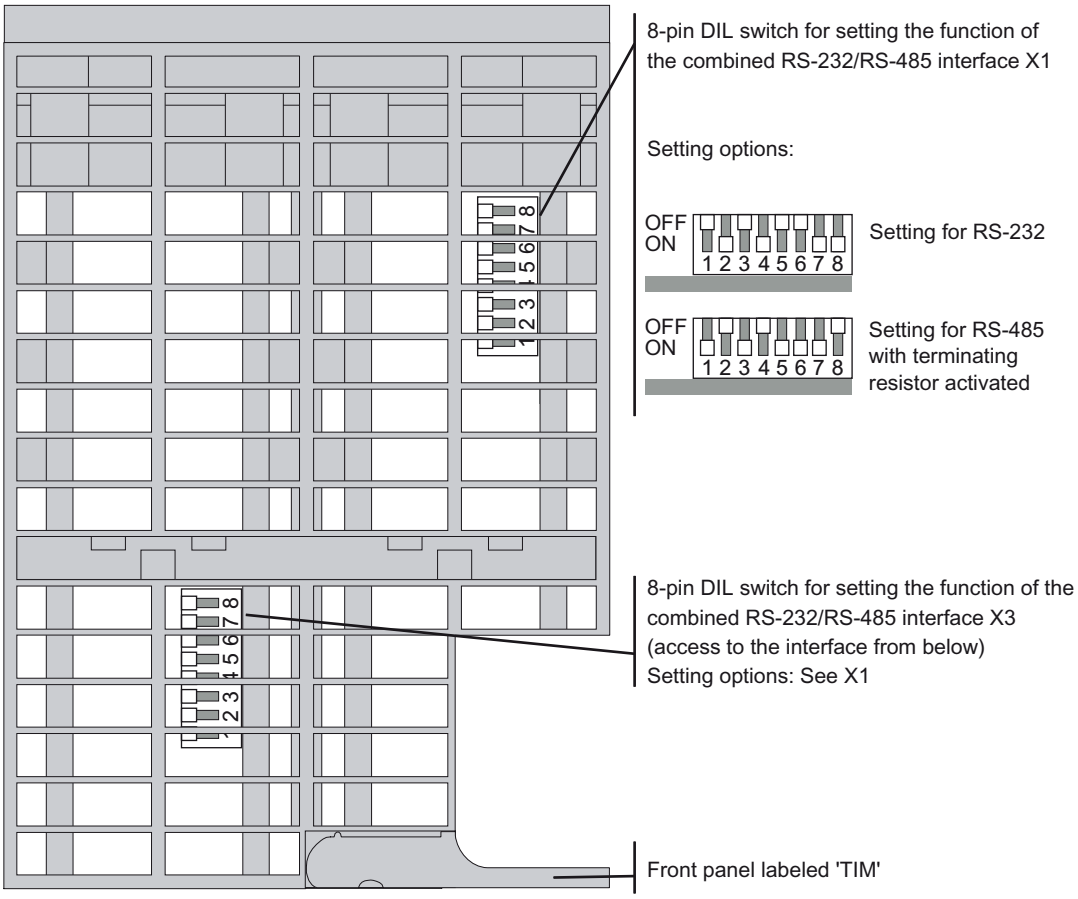

Figure 4-23 View of the TIM from above

4.3.7 View of the TIM 3 / TIM 4 from below

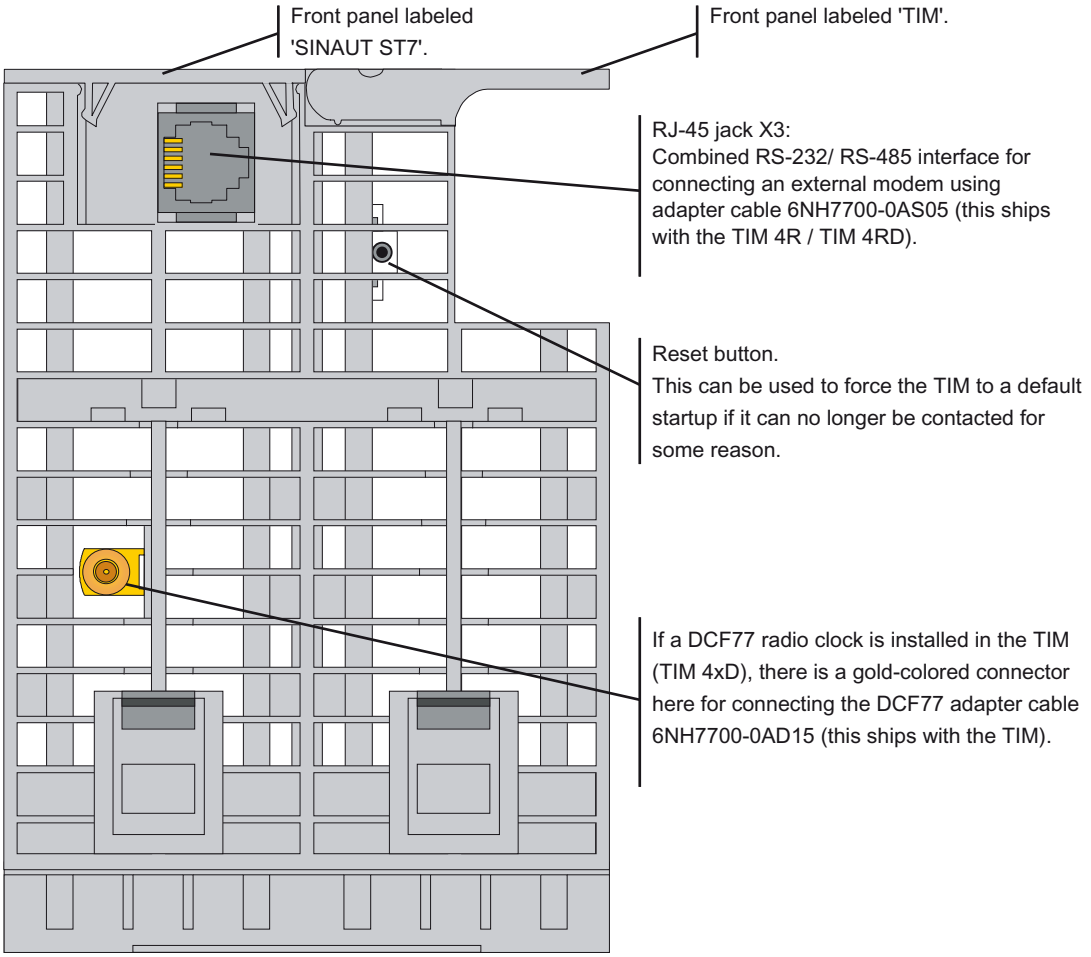

Figure 4-24 View of the TIM from below

DCF77 adapter cable

An adapter cable is required to connect the integrated DCF77 radio clock to an indoor or outdoor antenna. The cable has a BNC male connector to which the normal antenna cable can be connected.

The adapter cable is supplied with every TIM module with an integrated DCF77 radio clock. It can also be ordered as a spare part under the number listed in the following table.

Table 4- 15 Adapter cable for a TIM 4 with integrated DCF77 radio clock

Order no.	Description	Illustration
6NH7700-0AD15	Adapter cable for connecting a DCF77 radio clock integrated in a TIM, to adapt the internal connector to the external BNC connector. Cable length 1.5 m	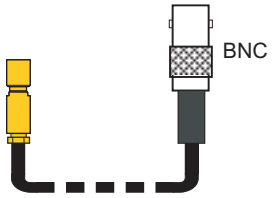

Interface adapter cable

The TIM 4R / TIM 4RD has a second serial interface X3 (combined RS-232/RS-485). The interface (8-pin RJ-45 jack) is accessible from below.

An adapter cable is required to connect the second serial port with an external modem or other transmission device. At one end of this cable, there is an RJ-45 plug and at the other end, a 9-pin D-sub miniature male connector to which the normal connecting cable to the modem or transmission device can be connected.

The adapter cable is supplied with each TIM 4R/4RD module. It can also be ordered as a spare part under the number listed in the following table.

Table 4- 16 TIM 4R / 4RD interface adapter cable

Order no.	Description	Illustration
6NH7700-0AS05	Adapter cable for connecting the 2nd serial RS-232/RS-485 port integrated in a TIM 4R / 4RD to convert the internal plug (RJ-45) to the 9-pin D-sub miniature male connector required externally. Cable length 0.5 m	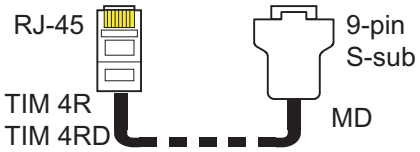

4.4 Options for connecting up and settings for the TIM 4R or TIM 4RD

Introduction

The following paragraphs explain the connection options for the TIM 4R / TIM 4RD and the location of the DIL switches with which you can make the hardware settings for the TIM.

In all the figures, the TIM is shown without front panels.

Note

Before you install a TIM module on the S7-300 rail, it is advisable to make all the required settings for operation on all the DIL switches of the TIM. These switches are more accessible when the module is not installed. If there is a DCF77 radio clock on the TIM, you should also plug in the DCF77 adapter cable before installing the TIM.

4.4.1 Possible attachments and settings for the TIM 4R and TIM 4RD

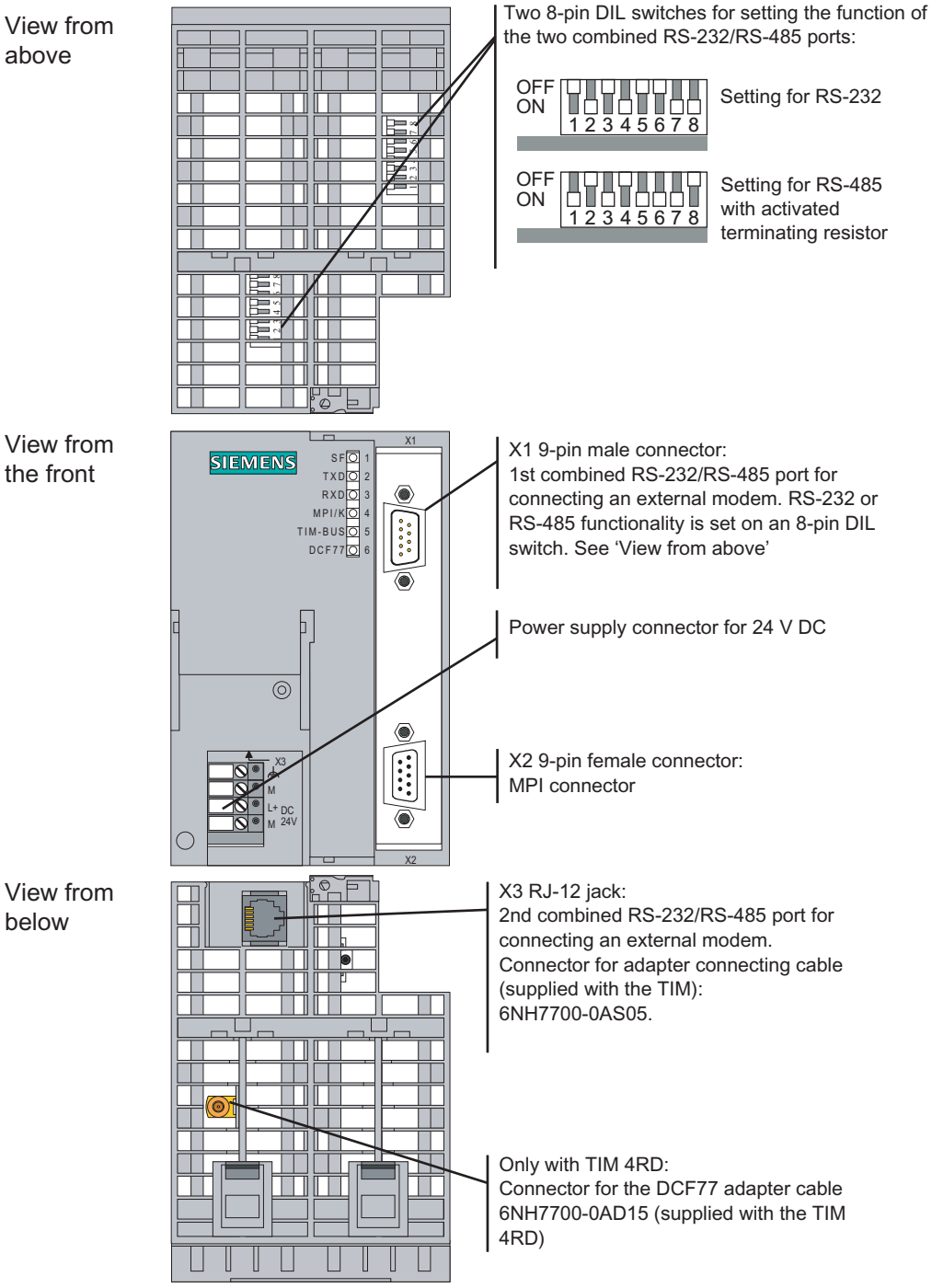

Figure 4-25 Possible attachment and settings for the TIM 4R or TIM 4RD

Pinout of the X3 RJ-45 Western jack for the RS-232/RS-485 port

The X3 connector of the combined RS-232/RS-485 port is designed as an 8-pin RJ-45 Western jack. The pinout is shown in the following table.

Table 4- 17 Pinout of the X3 RJ-45 Western jack for the RS-232/RS-485 port

Illustration	Pin no.	Signal name	Signal direction	Remark
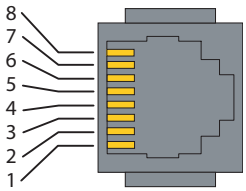	1	DCD	Input	
	2	RXD	Input	Pin with 8-pin DIL switch can be set to RS-485.
	3	TXD	Output	Pin with 8-pin DIL switch can be set to RS-485.
	4	DTR	Output	
	5	GND		
	6	DSR	Input	
	7	RTS	Output	
	8	CTS	Input	

Interface adapter cable

The TIM 4R / TIM 4RD has a second serial interface X3 (combined RS-232/RS-485).

An adapter cable is required to connect the second serial port with an external modem or other transmission device. At one end of this cable, there is an RJ-45 plug and at the other end, a 9-pin D-sub miniature male connector to which the normal connecting cable to the modem or transmission device can be connected.

The adapter cable is supplied with each TIM 4R/4RD module. It can also be ordered as a spare part under the number listed in the following table.

Table 4- 18 TIM 4R / 4RD interface adapter cable

Order no.	Description	Illustration
6NH7700-0AS05	Adapter cable for connecting the 2nd serial RS-232/RS-485 port integrated in a TIM 4R / 4RD to convert the internal plug (RJ-45) to the 9-pin D-sub miniature male connector required externally. Cable length 0.5 m	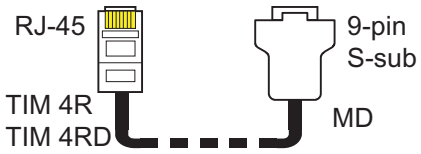

The following table shows the pinout of the two connectors for the standard connecting cable mentioned above.

Table 4- 19 Pinout of the RJ-45 module connector and the 9-pin D-sub connector

RJ-45 Western plug		Signal name	9-pin D-sub male connector	
Illustration	Pin no.		Pin no.	Illustration
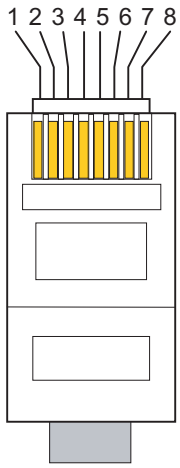	1	DCD	1	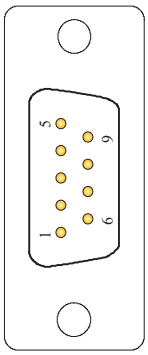
	2	RXD	2	
	3	TXD	3	
	4	DTR	4	
	5	GND	5	
	6	DSR	6	
	7	RTS	7	
	8	CTS	8	
		-	9	

Connecting the TIM 4R to two external modems

The following figure summarizes how the TIM 4R or the TIM 4RD is connected to two external modems using the specified standard connecting cable.

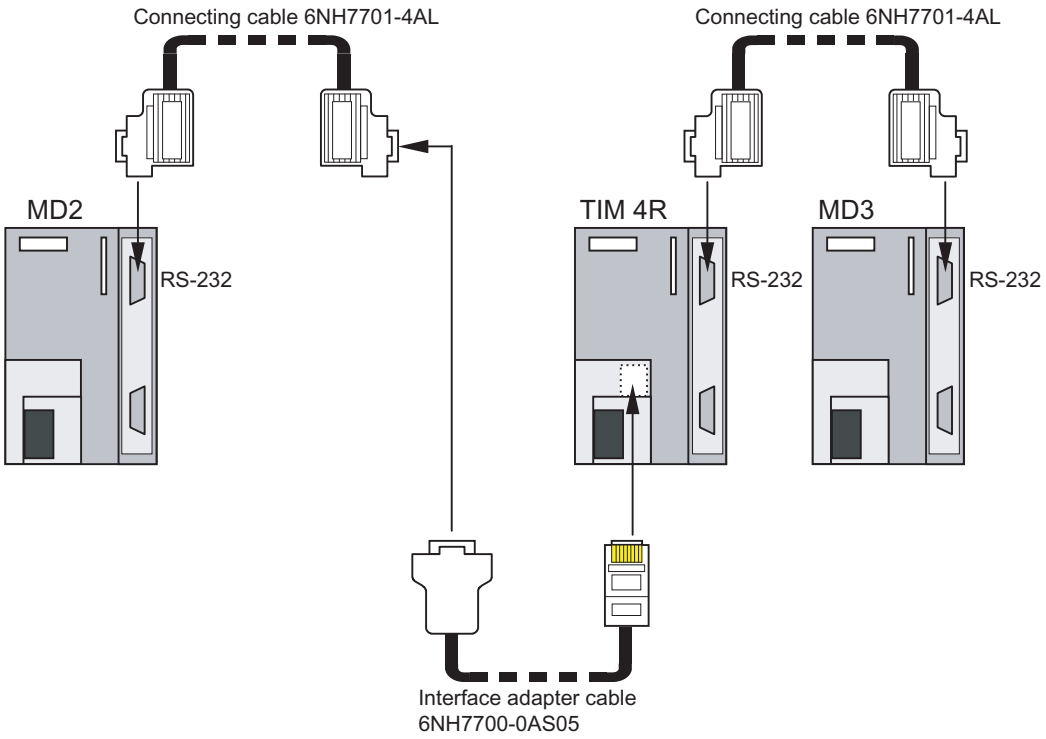

Figure 4-26 Connecting the TIM 4R to two external modems

4.5 Installing a TIM

4.5.1 Introduction

Introduction

All TIM types can be installed as a CP in an S7-300 device. With the exception of the TIM 3V-IE, every TIM variant can be operated with several other TIMs in an S7-300 rack.

The TIM 4 or TIM 4R-IE can also be mounted as a standalone device on an S7-300 rail and then communicates with S7-400 or S7-300 CPU modules and/or a PC control center over its MPI interface (TIM 4) or over Ethernet (TIM 4R-IE).

Note

Before you install a TIM module on the S7-300 rail, it is advisable to make all the required settings for operation on all the DIL switches of the TIM. These switches are more accessible when the module is not installed. If there is a DCF77 radio clock on the TIM, you should also plug in the DCF77 adapter cable before installing the TIM.

The TIM can be operated both in a horizontal and in a vertical installation.

The following sections describe how to mount the devices as a CP or standalone device.

4.5.2 Important notes on using the device

Safety notices on the use of the device

The following safety notices must be adhered to when setting up and operating the device and during all work relating to it such as installation, connecting up, replacing devices or opening the device.

General notices

⚠ WARNING

Safety extra low voltage

The equipment is designed for operation with Safety Extra-Low Voltage (SELV) by a Limited Power Source (LPS).

This means that only SELV / LPS complying with IEC 60950-1 / EN 60950-1 / VDE 0805-1 must be connected to the power supply terminals. The power supply unit for the equipment power supply must comply with NEC Class 2, as described by the National Electrical Code (r) (ANSI / NFPA 70).

There is an additional requirement if devices are operated with a redundant power supply:

If the equipment is connected to a redundant power supply (two separate power supplies), both must meet these requirements.

⚠ WARNING

Opening the device

DO NOT OPEN WHEN ENERGIZED.

The following notices relate to the following modules:

- TIM 3V-IE
- TIM 3V-IE Advanced
- TIM 4R-IE

Please note the following notices when using these modules in a hazardous location.

General notices on use in hazardous areas

WARNING

Risk of explosion when connecting or disconnecting the device

EXPLOSION HAZARD

DO NOT CONNECT OR DISCONNECT EQUIPMENT WHEN A FLAMMABLE OR COMBUSTIBLE ATMOSPHERE IS PRESENT.

WARNING

Replacing components

EXPLOSION HAZARD

SUBSTITUTION OF COMPONENTS MAY IMPAIR SUITABILITY FOR CLASS I, DIVISION 2 OR ZONE 2.

General notices on use in hazardous areas according to ATEX

WARNING

Requirements for the cabinet/enclosure

When used in hazardous environments corresponding to Class I, Division 2 or Class I, Zone 2, the device must be installed in a cabinet or a suitable enclosure.

To comply with EU Directive 94/9 (ATEX95), this enclosure must meet the requirements of at least IP54 in compliance with EN 60529.

WARNING

Suitable cables for temperatures in excess of 70 °C

If the cable or conduit entry point exceeds 70 °C or the branching point of conductors exceeds 80 °C, special precautions must be taken. If the equipment is operated in an air ambient between 50 °C and 70°C, only use cables with admitted maximum operating temperature of at least 80 °C.

⚠ WARNING

Protection against transient voltage surges

Provisions shall be made to prevent the rated voltage from being exceeded by transient voltage surges of more than 40%. This criterion is fulfilled, if supplies are derived from SELV (Safety Extra-Low Voltage) only.

4.5.3 Installing a TIM module as CP

Note

If you intend to install a SINAUT ST7 MD2, MD3 or MD4 modem to the right of the TIM, remember that the modem does not have an S7-300 backplane bus. There must therefore be no S7-300 module that communicates with the CPU over the backplane bus (SM, FM or CP) installed to the right of the modem.

To connect the TIM and MD2, MD3 or MD4 modem, no bus module connector is required (nor does this ship with the modem). The connection between TIM and modem is only over the connecting cable of the type 6NH7701 on the front.

Order of installation

Install a TIM as a CP in an S7-300 rack by following the steps in the order shown below:

1. Turn off the power supply to the CPU.
2. A bus module connector ships with the TIM. Insert this in the backplane connector of the module to the left of the TIM.
3. If you want to install further modules to the right of the TIM, insert the bus module connector of the next module into the right backplane connector of the TIM.
4. Place the TIM on the standard rail and push it in towards the bottom.
5. Screw the TIM securely into position.
6. Connect the TIM to the same power supply as the CPU.
7. If you are connecting the TIM to an external modem, the insert the 9-pin D-sub connector of the modem connecting cable into the X1 (or X2) connector of the TIM and screw it tight.

Note

The standard connecting cable 6NH7701-4AL for connecting the modem to a TIM module (RS-232) is connected to the MD2, MD3 or MD4 modem "head first" so that the cable comes away towards the top.

With a TIM 4, the standard connecting cable is also connected from above. With the TIM 3V-IE variants and the TIM 4R-IE, the cable is connected from below.

8. If you are using a TIM 4R / 4RD and require the supplied interface adapter cable 6NH7 700-0AS00, insert this in the second X3 interface located on the underside of the device and connect it via a modem connecting cable to the required modem.
9. If a DCF77 radio clock is installed in a TIM 4, the BNC plug of the antenna cable must be screwed to the BNC socket of the DCF77 adapter cable.
10. To install further TIMs in a rack, follow the same steps as described above.

Note

With a TIM 3V-IE, only one TIM module may be installed per S7-300. This means that TIM modules of other types cannot be added either.

11. Once all the TIMs are installed, the power supply can be turned on. The TIM starts up. The LEDs indicate the current start-up activities (see separate section *Start-up activities*).
12. Once it has started up, the TIM can be supplied with its parameters (SDBs) using the SINAUT Diagnostics and Service tool. With the TIM 3V-IE variants and the TIM 4R-IE, the SDBs can also be loaded on the memory card of the S7-300 CPU, with the TIM 4R-IE, you can also use the optional C-PLUG of this module for storage. The TIM receives then its configuration data from the CPU during startup or takes it from the inserted C-PLUG.

4.5.4 Installing a TIM 4 / TIM 4R-IE as a standalone device

Order of installation

To install the TIM 4 or TIM 4R-IE as a standalone device on an S7-300 rail, follow the steps below in the order shown:

1. Place the TIM on the standard rail and push it in towards the bottom.
2. Screw the TIM securely into position.
3. Connect the TIM to the power supply. Since this is a separate TIM rack, this does not need to be the power supply of the CPU with which the TIM is connected over MPI or Ethernet.
4. Insert the adapter cable supplied with the TIM 4R / TIM 4RD in the RJ-45 jack (underside) to connect the second RS-232/RS-485 X3 interface.
5. If you are connecting the TIM to an external modem, the insert the 9-pin D-sub connector of the modem connecting cable into the X1 connector of the TIM 4 or into the X1 or X2 connector of the TIM 4R-IE and screw it tight.
6. If a DCF77 radio clock is installed in the TIM, the BNC plug of the antenna cable must be screwed to the BNC socket of the DCF77 adapter cable.

7. To install further TIMs in a rack, follow the same steps as described above. Observe the following note.

   Note

   The bus module connector supplied with every TIM is not required. The TIMs are interconnected over the MPI bus (TIM 4) or over Ethernet (TIM 4R-IE).

8. When all the TIMs have been installed, interconnect the TIMs and connect them to the S7-CPU(s) or the PC of the control center. Connect a TIM 4R-IE over Ethernet and a TIM 4 over a normal MPI connection. Remember that the terminating resistor in the MPI connector of the MPI nodes at the beginning and end of the MPI bus must be activated.
9. Once the wiring is completed, the power supply can be turned on. The TIMs start up. The LEDs on each TIM indicate the current start-up activities (see separate section *Start-up activities*).
10. Once it has started up, the TIM can be supplied with its parameters (SDBs) using the SINAUT Diagnostics and Service tool.

With the TIM 3V-IE variants and the TIM 4R-IE, the SDBs can also be loaded on the memory card of the S7-300 CPU, with the TIM 4R-IE, you can also use the optional C-PLUG of this module for storage. The TIM receives then its configuration data from the CPU during startup or takes it from the inserted C-PLUG.

4.5.5 Horizontal and vertical installation

Horizontal and vertical installation

You can operate the SINAUT ST7 components both in horizontally and in vertically installed racks.

Permitted ambient temperature

The SINAUT ST7 components can be operated in the same temperature range specified for the S7-300.

Table 4- 20 Permitted ambient temperatures for the SINAUT TIM modules

Installation position	Permitted ambient temperature (operation)
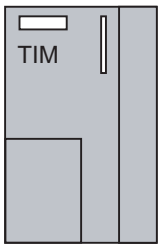 Horizontally installed rack	0 to 60 °C
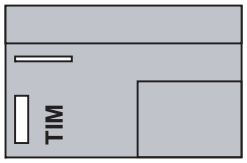 Vertically installed rack	0 to 40 °C

Dimensions for installing the SINAUT TIM modules

Table 4- 21 Dimensions for installing the SINAUT TIM modules

Module	Module width	Module height	Max. depth
Communications module TIM 3V-IE and TIM 3V-IE Advanced	40 mm	125 mm	120 mm or 150 mm with open front panel
Communications module TIM 4 and TIM 4R-IE	80 mm	125 mm	120 mm or 180 mm with open front panel

4.5.6 Connecting the TIM to the power supply

⚠ WARNING

Connecting the TIM module to a live power supply can damage the module. Connect the module to the power supply only when the power supply is off.

⚠ WARNING

The power for the device (24 V DC) must be generated as a safe extra low voltage. This means it must be a SELV (Safety Extra Low Voltage) or PELV (Protective Extra Low Voltage) according to DIN VDE 0100 Part 410 (IEC 60364-4-41).

Cables

To wire the power supply, use flexible cables with a cable cross-section of 0.25 ...0.75 mm².

If you wire only one cable per connection, no wire-end ferrule is necessary.

Wiring

To wire up the power supply module with a TIM, follow the steps below:

1. Open the front panels of the power supply unit and the TIM.
2. Connect the power supply cables from the power supply unit to the TIM: M and L+
3. Close the front panels.

Note

To avoid ground loops, do not connect the shielding of the TIM.

Wiring diagram

The figure below shows the wiring diagram for one or more TIMs of the type TIM 4. Instead of a TIM, a SINAUT ST7 modem of the type MD2, MD3 or MD4 can also be installed. The same wiring diagram applies to these modules.

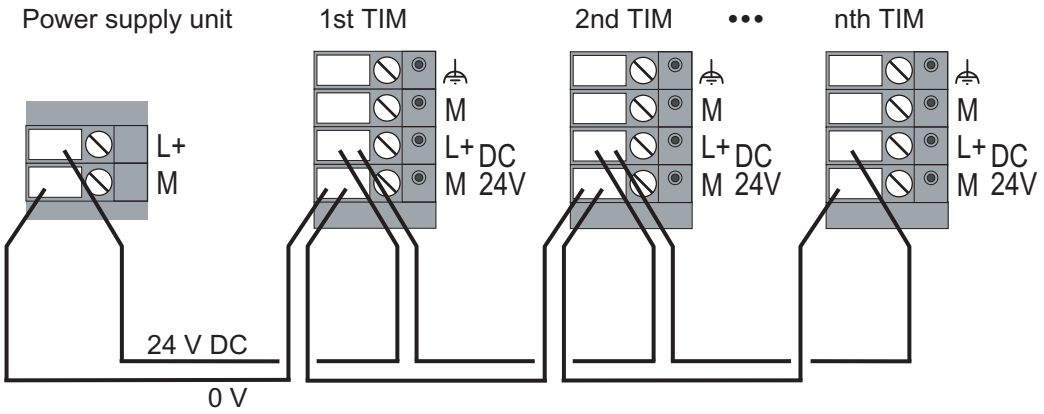

Figure 4-27 Power supply connection for TIM 4

The next figure shows how to connect up the TIM 3V-IE variants and the TIM 4R-IE.

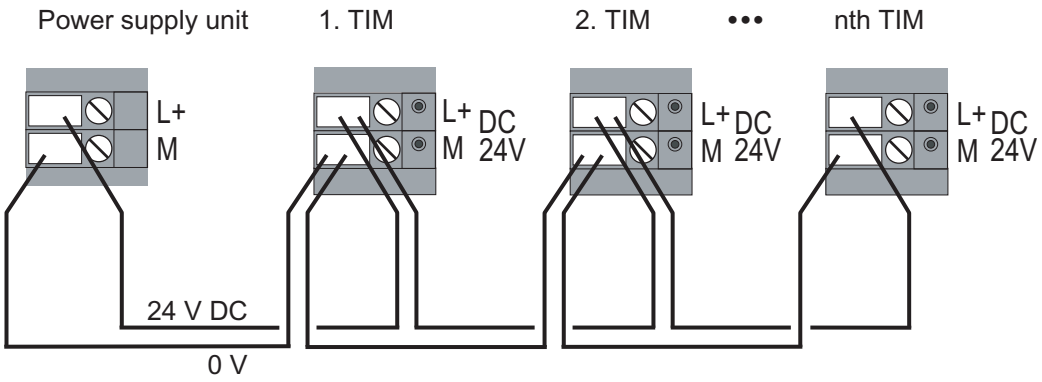

Figure 4-28 Connecting TIM 3V-IE variants and the TIM 4R-IE to the power supply

Note

If one or more TIMs are installed as a CP in an S7-300 device, the CPU and TIMs must be connected to the same power supply. This ensures that the CPU and TIMs start up at the same time when the power supply is turned on.

4.6 Configuring a TIM and setting parameters

Introduction

The chapter *Configuration software for SINAUT ST7* contains a detailed description of configuring and setting the parameters for a TIM. The next sections provide you with a brief summary of this topic and explain which data generated during commissioning needs to be transferred to the TIM to make it operational.

Configuration

Just as with all other S7 modules, the TIM is configured and its parameters assigned in the *HW Config* STEP 7 program. The various TIM modules are available in the hardware catalog of HW Config in the *SIMATIC 300 / SINAUT ST7* folder.

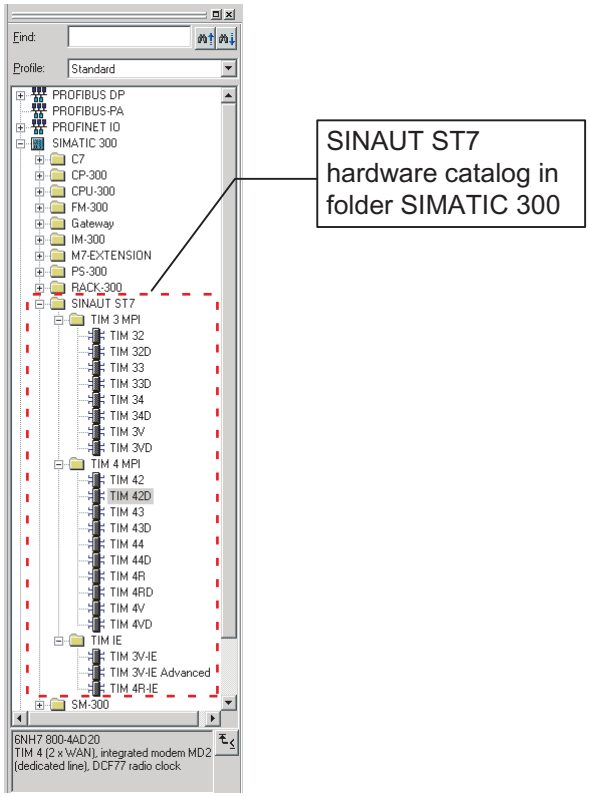

Figure 4-29 The catalog window *Hardware Catalog* with the SINAUT ST7 folder open

You can select the TIM you want to install in a rack from this catalog. The following figure shows an S7-300 station with a TIM and various other modules installed.

Assigning parameters to the TIM

If you double-click on the TIM module, you open the parameter assignment dialog for the TIM. You can then specify the required properties in a series of tabs.

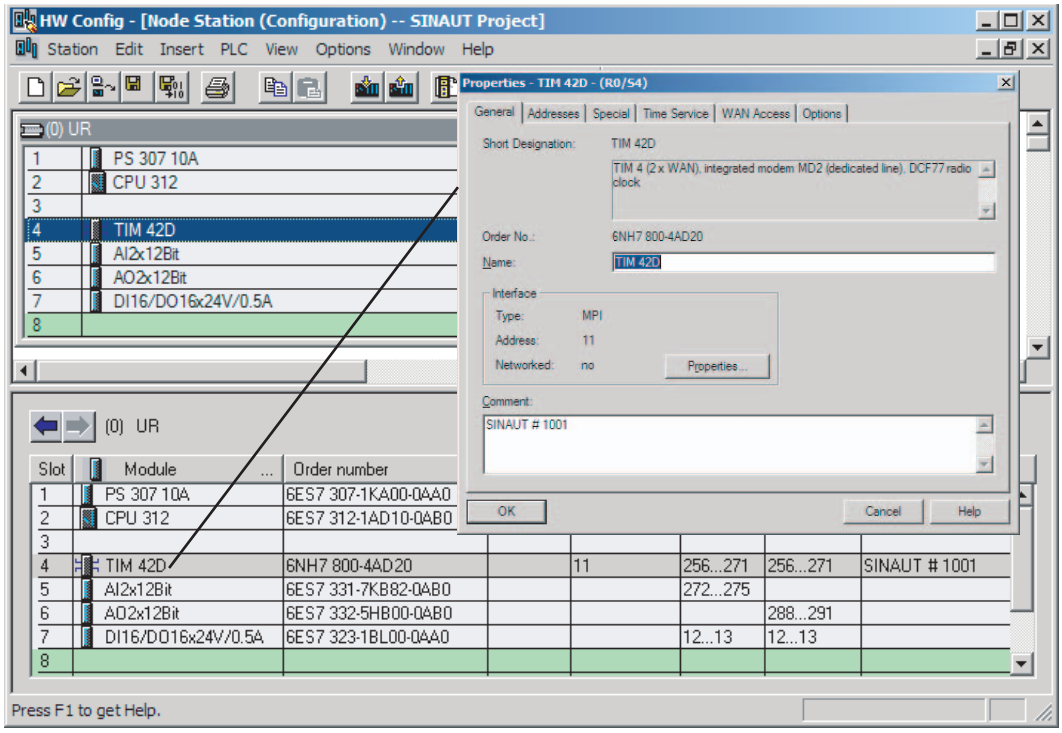

Figure 4-30 S7-300 station with installed TIM and TIM parameter assignment dialog

Setting parameters for networks and network nodes

The next step is to connect the various stations in a WAN. This part of the configuration is done with the *NetPro* STEP 7 program.

If you are using an IP-based WAN such as DSL or GPRS, take a normal Industrial Ethernet from the NetPro catalog. The classic SINAUT WANs "dedicated line" and "dial-up network" can also be taken from the NetPro catalog. These SINAUT networks have been added to the "Subnets" folder.

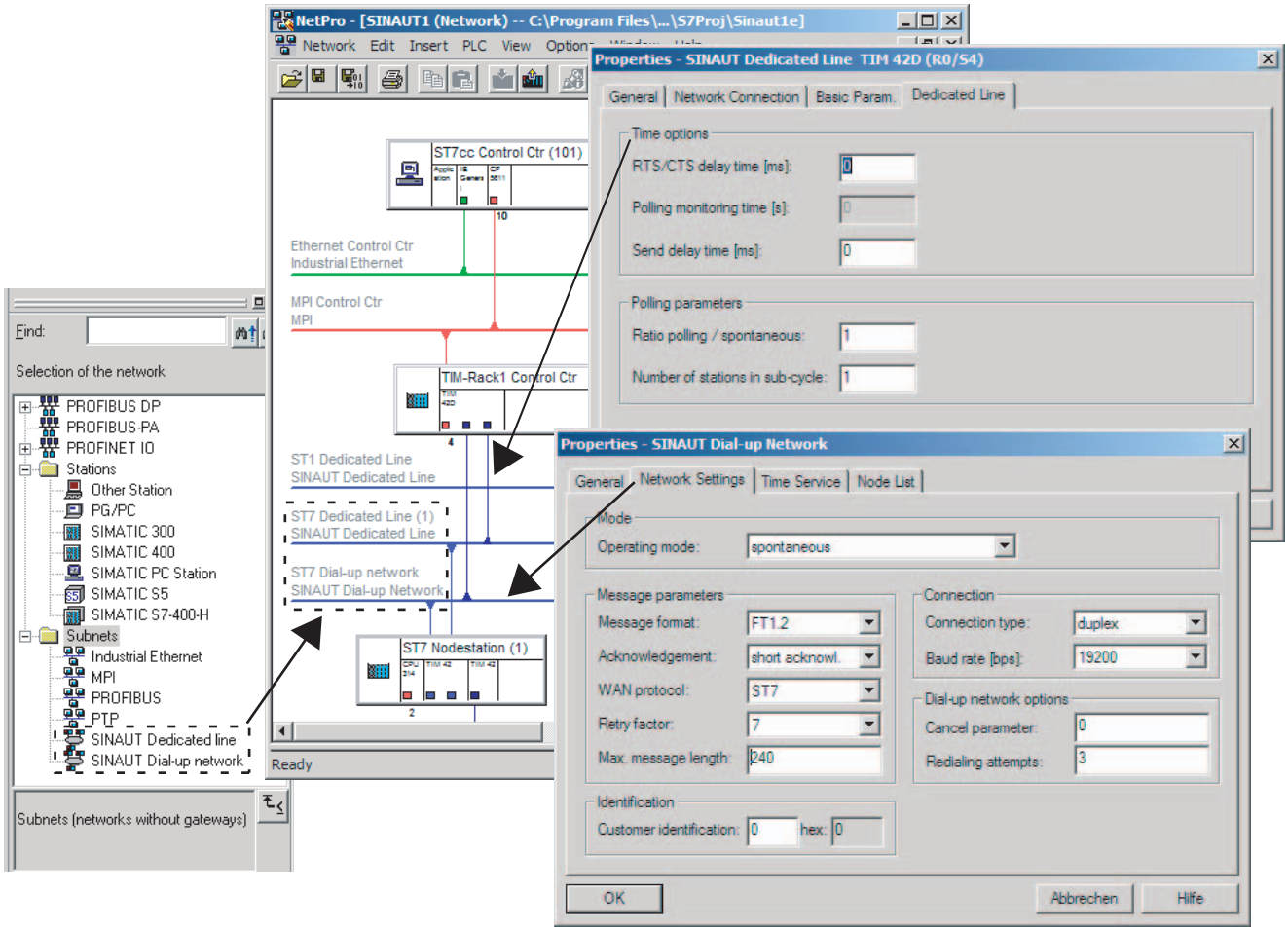

Figure 4-31 Networked system with parameter assignment dialogs for network and network nodes opened

The properties of the two classic WANs are specified in a parameter assignment dialog for dedicated lines and for dial-up networks. The relevant dialog can be opened simply by double-clicking on the corresponding network. To set the parameters for the various network nodes, you also double-click on the connecting line between the network and the node to open the relevant parameter assignment dialog.

Setting parameters for SINAUT connections

Once the system is networked and the properties for the networks or network nodes have been specified, you can start the SINAUT ST7 configuration tool to complete parameter assignment. This tool is used, on the one hand, to automatically identify which connections are possible from the PC of the control center to the CPU and from CPU to CPU and to make them available for selection. On the other hand, all CPUs, PC(s) of the control center and all TIMs are also assigned a SINAUT subscriber number that is unique throughout the system.

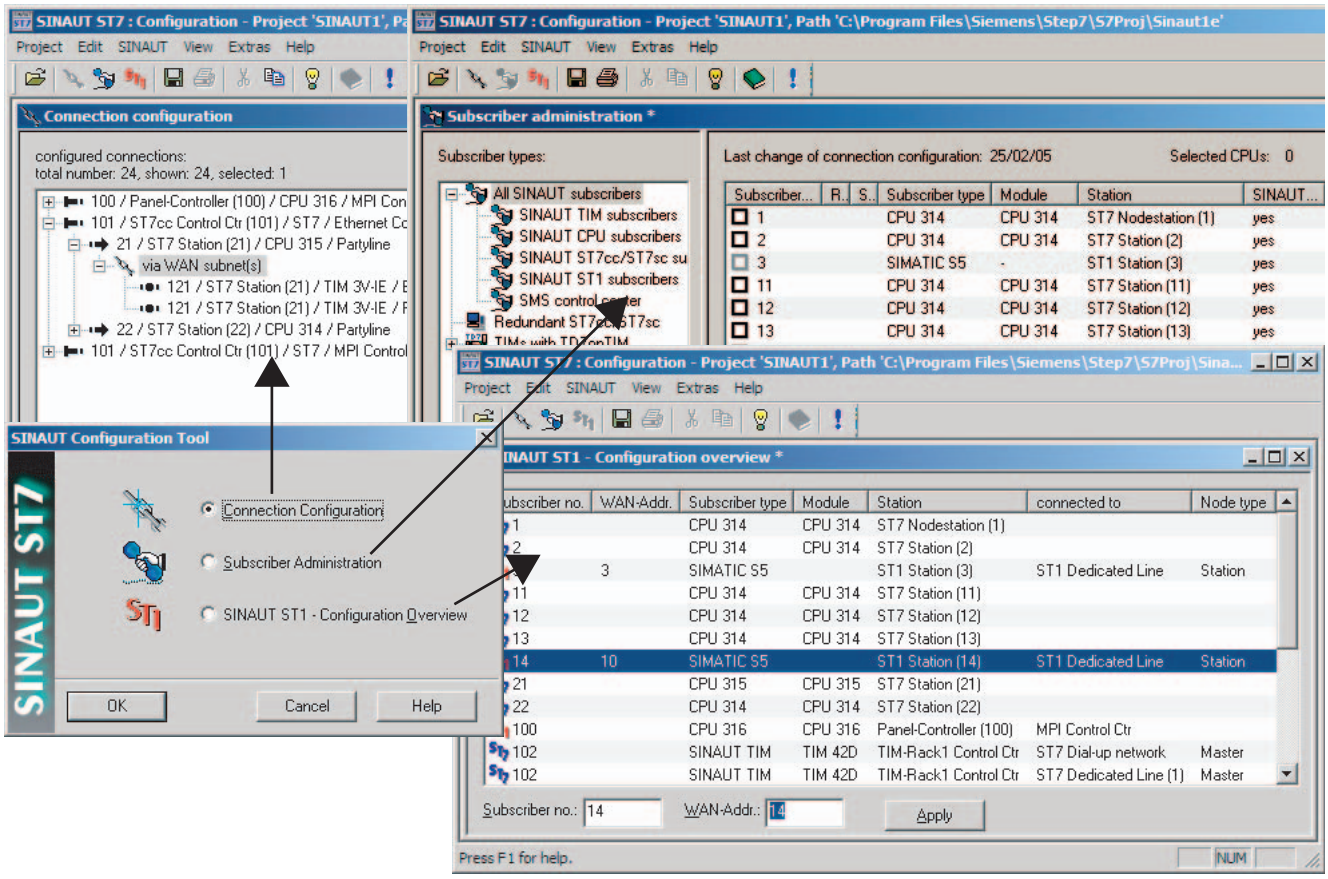

Figure 4-32 SINAUT ST7 configuration tool for connection configuration and subscriber administration

Select the required connections from the right-hand pane of the connection configuration by transferring them to the left-hand pane.

After saving the selected connections, you then open Subscriber administration. In the simplest case, no changes need to be made here. The open Subscriber administration can then be saved immediately. The configuration tool then generates the system data blocks (SDBs) resulting from the configuration for all TIMs, the SDBs for the CPUs and some additional data blocks required by the SINAUT TD7 (TD7onCPU) software package.

If the project also includes ST1 devices, it may be necessary to synchronize the addresses for SINAUT ST1. This can be carried out in a further tool SINAUT ST1 - Configuration Overview.

Transferring the SDBs to a TIM

The SDBs and DBs are saved automatically in the program directory of the CPU or the TIM by the configuration tool. From there, transfer them to the CPU and TIM. The following figure shows the SDB folder that was saved in the program directory of the TIM. This must be transferred to the TIM 42 in TIM rack 2 of the control center. This completes the parameter assignment for the TIM that you can now put into operation.

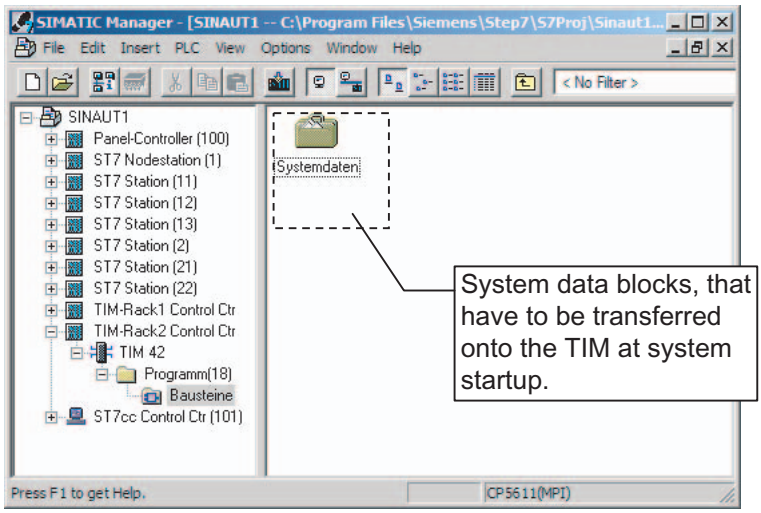

Figure 4-33 System data blocks (SDBs) in the program directory of the TIM

The SDBs are transferred to a TIM as follows:

- Over the MPI interface of the TIM 4 if this is installed as a stand-alone device.
- With a TIM 3 without MPI interface and with a TIM 4 installed as a CP in an S7-300, use the MPI interface of the CPU via which the TIM is accessible on the S7-300 backplane bus and can be reached to load the SDBs.
- With the TIM 3V-IE, TIM 3V-IE Advanced and TIM 4R-IE via the MPI interface of the CPU or via the Ethernet interface.

The SDBs may only be transferred after the TIM has completed its startup. The TIM's LEDs indicate when startup is completed. For more detailed information, refer to the section *Startup activities of the TIM*.

Note

With the TIM 3V-IE variants and the TIM 4R-IE, the SDBs can be stored on the TIM or the S7-300 CPU. This is specified in the parameter assignment of the module. If you decide to store the SDBs on the TIM, the SDBs must be transferred to the module as described above. If the SDBs are stored on the CPU, it is not necessary to transfer the SDBs separately. The TIM receives the SDBs from the CPU during the common startup of the modules in the S7-300 rack.

4.7 Startup activities of the TIM module

4.7.1 Startup of the TIM 3V-IE variants

Introduction

During startup, the LEDs on the front panel of the TIM 3V-IE variants have a different significance than during normal operation. They are optical indicators of the various startup phases and provide detailed information about any errors detected during startup. The only exceptions are the LINK and RX/TX LEDs that have no significance during the startup of the TIM 3V-IE variants.

LED displays during startup

The following table summarizes the startup phases.

Table 4- 22 LED activity on the TIM 3V-IE variants during the various startup phases

Phase	Activity	SF	RUN	STOP	KBus	TxD	RxD
1	Power ON followed by hardware initialization	**On**	**On**	**On**	**On**	**On**	**On**
2	Loading the operating system from flash memory	Off	**On**	**On**	**On**	**On**	**On**
3	Starting VxWorks operating system	Off	Off	**On**	**On**	**On**	**On**
4	Loading and starting TIM firmware	Off	Off	Off	**On**	**On**	**On**
5	Initializing flash file system and starting the start manager	Off	Flashes	**On**	Off	Off	Off
6	Loading and starting P bus driver	Off	Flashes	**On**	**On**	Off	Off
7	Loading and starting subscriber management (SubA)	Off	Flashes	**On**	Off	**On**	Off
8	Loading and starting LAN-COM	Off	Flashes	**On**	**On**	**On**	Off
9	Loading and starting subscriber management (MesA)	Off	Flashes	**On**	Off	Off	**On**
10	Loading and starting time-of-day driver	Off	Flashes	**On**	**On**	Off	**On**
11	Loading and starting the TD7 software of the TIM (TD7onTIM) on the TIM	Off	Flashes	**On**	Off	**On**	**On**
12	Loading and starting WAN driver	Off	Flashes	**On**	**On**	**On**	**On**
13a	Startup completed without error	Off	**On**	Off	X [1)]	X [1)]	X [1)]
13b	Startup completed with error	On	Off	**On**	X [2)]	X [2)]	X [2)]
13c	Startup aborted - user parameter assignment missing Module expects user parameter assignment	Off	Off	**On**	Flashes	Flashes	**On**
13d	Startup aborted - No firmware loaded.	Off	Off	**On**	**On**	Flashes	Flashes

Phase	Activity	SF	RUN	STOP	KBus	TxD	RxD
13e	Startup aborted - No SDBs and no firmware loaded.	Off	Off	**On**	Flashes	Flashes	Flashes
13f	Default startup completed	Off	Flashes	Flashes	**On**	**On**	**On**

1) The LEDs KBus, TxD and RxD now operate in normal mode

2) The LEDs KBus, TxD and RxD remain in the phase in which the error occurred

Group error LED

If a problem occurs during startup, the red group error LED (SF) lights up and a diagnostic interrupt is sent to the CPU. A message to this effect is also entered in the diagnostic buffer of the TIM. In the chapter on the SINAUT Diagnostics and Service tool, you will find a table with a summary of all the errors that can cause the group error LED to light up, as well as a detailed description of each error message.

Note

After transferring the SDBs to the TIM, the group error LED flashes for approximately 10 seconds. This indicates that the TIM has registered the transfer and will automatically start a reset after a further 10 seconds and the parameter assignment from the newly transferred SDBs will be adopted. The TIM then behaves the same as following power "ON".

Default startup

If the situation arises that the TIM 3V-IE / TIM 3V-IE Advanced can no longer be addressed over the MPI interface of the CPU or its own Ethernet interface following startup due to a bad parameter assignment, the TIM can be returned to a defined state using the default startup. Following the default startup, the TIM can have new parameters set both over the MPI interface of the CPU and over its own Ethernet interface.

To force a default startup, follow the steps outlined below:

1. Turn off the power for the TIM.
2. Press the reset button accessible from the front, turn on the power while holding down the reset button.
3. During hardware initialization (LED phase 1), the SF LED is turned off briefly and then turned on again. Release the reset button at the moment when the RUN LED stops flashing and the SF LED is turned on again.
4. Wait until the startup of the TIM is completed and the default startup is signaled by the LEDs.

5. The TIM can then be supplied with its parameters over the MPI interface of the CPU or its own Ethernet interface.

Note

With the CPU types CPU 312, CPU 312-C, CPU 313-C, CPU 314, CPU 314-C, CPU 315-2 DP and CPU 315F-2 DP, the TIM is assigned MPI address 3 following a default startup. If another subscriber on the MPI bus already has MPI address 3, a conflict will arise. You will then have to disconnect one of the two modules temporarily from the MPI bus to be able to transfer the parameters (including the correct MPI address) to the TIM.

6. Restart the TIM on completion of the parameter assignment.

4.7.2 Startup activities of the TIM 4R-IE

Introduction

During startup, the LEDs on the front panel of the TIM 4R-IE have a different significance than during normal operation. They are optical indicators of the various startup phases and provide detailed information about any errors detected during startup. During startup on the TIM 4R-IE, the "BATF", "P1" and "P2" LEDs have no significance.

LED displays during startup

The following table summarizes the startup phases.

Table 4- 23 LED activity on the TIM 4R-IE during the various startup phases

Phase	Activity	SF	RUN	STOP	KBUS	TXD1	RXD1	TXD2	RXD2
1	Power ON, followed by hardware initialization	On	On	On	On	On	On	On	On
2	Loading the operating system from flash memory	Off	On	On	On	On	On	On	On
3	Starting VxWorks operating system	Off	Off	On	On	On	On	On	On
4	Loading and starting TIM firmware	Off	Off	Off	On	On	On	On	On
5	Initializing flash file system and starting the start manager	Off	Flashes	On	Off	Off	Off	Off	Off
6	Loading and starting P bus driver	Off	Flashes	On	On	Off	Off	Off	Off
7	Loading and starting subscriber management (SubA)	Off	Flashes	On	Off	On	Off	Off	Off
8	Loading and starting LAN-COM	Off	Flashes	On	On	On	Off	Off	Off
9	Loading and starting subscriber management (MesA)	Off	Flashes	On	Off	Off	On	Off	Off

Phase	Activity	SF	RUN	STOP	KBUS	TXD1	RXD1	TXD2	RXD2
10	Loading and starting time-of-day driver	Off	Flashes	**On**	**On**	Off	**On**	Off	Off
11	Loading and starting the TD7 software of the TIM (TD7onTIM) on the TIM	Off	Flashes	**On**	Off	**On**	**On**	Off	Off
12	Loading and starting WAN driver	Off	Flashes	**On**	**On**	**On**	**On**	Off	Off

You will find the LED lighting scheme following a completed or aborted startup in the following table.

Table 4- 24 LED activity on the TIM 4R-IE after a completed or aborted startup

Phase	Status	SF	RUN	STOP	KBUS	TXD1	RXD1	TXD2	RXD2
13	**Startup completed or aborted**								
13a	Startup completed without error	Off	**On**	Off	X [1]	X [1]	X [1]	X [1]	X [1]
13b	Startup completed with error	**On**	Off	**On**	X [2]	X [2]	X [2]	X [2]	X [2]
13c	Startup aborted - user parameter assignment missing Module expects parameter SDBs	Off	Off	**On**	**On**	Flashes	**On**	Flashes	**On**
13d	Startup aborted - No firmware loaded.	Off	Off	**On**	Flashes	**On**	Flashes	**On**	Flashes
13e	Startup aborted - No SDBs and no firmware loaded	Off	Off	**On**	Flashes	Flashes	Flashes	Flashes	Flashes
13f	Default startup completed (see below)	Off	Flashes	Flashes	**On**	**On**	**On**	**On**	**On**
13g	Automatic default startup completed (see below)	**On**	Flashes	Flashes	**On**	**On**	**On**	**On**	**On**
13h	Startup aborted due to incorrect firmware (firmware does not match module type)	**On**	Flashes	Flashes	Flashes	Flashes	Flashes	Flashes	Flashes

[1] The LEDs operate in normal mode
[2] The LEDs remain in the phase in which the error occurred.

Group error LED

If an error occurs during startup, the red group error LED (SF) lights up and, if the TIM is installed as a CP in an S7-300, a diagnostic interrupt is sent to the CPU. A message to this effect is also entered in the diagnostic buffer of the TIM. In the chapter on the SINAUT Diagnostics and Service tool, you will find a table with a summary of all the errors that can cause the group error LED to light up, as well as a detailed description of each error message.

Note

After transferring the SDBs to the TIM, the group error LED flashes for approximately 10 seconds. This indicates that the TIM has registered the transfer and will automatically start a reset after a further 10 seconds and the parameter assignment from the newly transferred SDBs will be adopted. The TIM then behaves the same as following power "ON".

Default startup

If the situation arises that the TIM 4R-IE can no longer be addressed over the MPI (over the CPU) or Ethernet bus following startup due to a bad parameter assignment, the TIM can be returned to a defined state using the default startup. Following the default startup, the TIM can be assigned new parameter settings over the MPI interface.

To force a default startup, follow the steps outlined below:

1. Turn off the power for the TIM.
2. Press the reset button accessible from the front, turn on the power while holding down the reset button.
3. During hardware initialization (LED phase 1), the SF LED is turned off briefly and then turned on again. Release the reset button at the moment when the RUN LED stops flashing and the SF LED is turned on again.
4. Wait until the startup of the TIM is completed and the default startup is signaled by the LEDs.
5. The TIM can then be supplied with its parameters over the MPI interface of the CPU or its own Ethernet interface.

   Note

   If the TIM 4R-IE is installed as a CP in an S7-300 and the CPU is of the type CPU 312, CPU 312-C, CPU 313-C, CPU 314, CPU 314-C, CPU 315-2 DP or CPU 315F-2 DP, the TIM is assigned the MPI address 3 following a default startup. If another subscriber on the MPI bus already has MPI address 3, a conflict will arise. You will then have to disconnect one of the two modules temporarily from the MPI bus to be able to transfer the parameters (including the correct MPI address) to the TIM.

6. Restart the TIM on completion of the parameter assignment.

Automatic default startup

A TIM 4R-IE configured for operation along with a CPU in the rack but that starts up in standalone mode, runs a so-called "automatic default startup". Following the aborted startup, the LEDs of the TIM are lit as shown in row 13g of the table (see above). Although the TIM 4R-IE can then be addressed for loading parameters, it does not perform any further functions.

4.7.3 Startup behavior of the TIM 4

Introduction

During startup, the meaning of the LEDs on the front panel of the TIM 4R / TIM 4RD is different from the meaning during normal operation. They are optical indicators of the various startup phases and provide detailed information about any errors detected during startup.

LED displays during startup

The following table summarizes the startup phases.

Table 4- 25 LED activity on the TIM 4R / TIM 4RD during the various startup phases

Phase	Activity	Explanation
1	Power ON	All LEDs light up at the same time.
2	RAM test	Starting with LED 6 (DCF77), the LEDs go off one after the other at intervals of approximately 10 seconds. If an error is detected during the RAM test, LED 1 (SF group error) remains lit at the end. If everything is OK, the TIM changes to phase 3.
3	Service mode	After all the LEDs have gone off, all LEDs light up again for 5 seconds. During this time, the user can force a default startup (see below) using the reset button. Otherwise, the TIM changes to phase 4.
4	Software startup	All the LEDs go off again and then light up again one after the other starting with LED 2 (TXD). At this stage of startup, the individual steps of the software startup are signaled by the LEDs. The LEDs are either lit continuously or flash. The following table lists the exact meaning of the individual LEDs when lit continuously or flashing during this startup phase 4.
5	Startup completed	The LEDs go off if phase 4 is completed free of errors and then have the significance according to their definition in normal operation.

Table 4- 26 LED activity during software startup (startup phase 4)

Phase	Activity	LED 2	LED 3	LED 4	LED 5	LED 6
4.1	Starting the RMOS operating system	On				
4.2	Starting the TIM firmware	(On)	On			
4.3	Start normal startup	(On)	(On)	On		
	Start default startup	(On)	(On)	Flashes		
4.4	Startup of the TIM as CP in the S7-300 rack	(On)	(On)	(On/flashes)	On	
	Startup of the TIM on MPI (TIM 4 only)	(On)	(On)	(On/flashes)	Flashes	
4.5	Normal startup with parameters	(On)	(On)	On	(On/flashes)	On
	Normal startup without parameters	(On)	(On)	On	(On/flashes)	Flashes
	Default startup	(On)	(On)	Flashes	(On/flashes)	Flashes

The LEDs whose activity is not shown in brackets ( ), provide the actual information on the current startup phase.

Group error LED

If an error occurs during startup, the red group error LED (SF) lights up and, if the TIM 4 is installed as a CP in an S7-300 rack, a diagnostic interrupt is sent to the CPU. A message to this effect is also entered in the diagnostic buffer of the TIM 4. In the chapter on the SINAUT Diagnostics and Service tool, you will find a table with a summary of all the errors that can cause the group error LED to light up, as well as a detailed description of each error message.

Note

After transferring the SDBs to the TIM, the group error LED flashes for approximately 10 seconds. This indicates that the TIM has registered the transfer and will automatically start a reset after a further 10 seconds and the parameter assignment from the newly transferred SDBs will be adopted. The TIM then behaves the same as following power "ON".

Default startup

If the situation arises that the TIM 4 can no longer be addressed over the MPI bus following startup due to a bad parameter assignment, the TIM can be returned to a defined state using the default startup. Following the default startup, the TIM can be assigned new parameter settings over the MPI bus.

To force a default startup, follow the steps outlined below:

1. Press the reset button accessible from below until all the LEDs on the TIM light up.
2. Follow the various startup phases of the TIM based on the LED display.
3. During startup phase 3 (service mode, see table), press the reset button again until all the LEDs on the TIM light up.
4. Wait until the startup of the TIM is completed and the default startup is signaled by the LEDs.
5. The TIM can now have new parameters set over the MPI bus using default MPI address 3.

   Note

   If another subscriber on the MPI bus already has MPI address 3, a conflict will arise. You will then have to disconnect one of the two modules temporarily from the MPI bus to be able to transfer the parameters (including the correct MPI address) to the TIM.

6. Restart the TIM on completion of the parameter assignment.

Installation and commissioning of the modems and routers

5

5.1 Overview

Introduction

The following modem variants are available in the SINAUT ST7 range.

MD720-3 GSM wireless modem
for data transmission over the GSM mobile wireless network by establishing a dial-up connection (CSD, Circuit Switched Data) or
for IP.based data transmission with the MSC protocol (GPRS)
max. 9600 bps

MD741-1 GPRS router
for data transmission using the (E)GPRS service (General Packet Radio Service) of a mobile wireless provider,
secure connection with integrated VPN router and firewall,
max. 54 Kbps

MD2 Dedicated line modem
for multipoint connection, can be tapped.
Can also be used as a repeater,
max 19,200 bps

MD3 Modem for the analog telephone network,
max. 33,600 bps.
Can also be used a dedicated line modem for a point to-point connection,
max. 33,600 bps in voice band

MD4 Modem for the digital ISDN network
max. 64,000 bps

5.2 Important notes on using the device

Safety notices on the use of the device

The following safety notices must be adhered to when setting up and operating the device and during all work relating to it such as installation, connecting up, replacing devices or opening the device.

General notices

⚠ WARNING

Safety extra low voltage

The equipment is designed for operation with Safety Extra-Low Voltage (SELV) by a Limited Power Source (LPS).

This means that only SELV / LPS complying with IEC 60950-1 / EN 60950-1 / VDE 0805-1 must be connected to the power supply terminals. The power supply unit for the equipment power supply must comply with NEC Class 2, as described by the National Electrical Code (r) (ANSI / NFPA 70).

There is an additional requirement if devices are operated with a redundant power supply:

If the equipment is connected to a redundant power supply (two separate power supplies), both must meet these requirements.

⚠ WARNING

Opening the device

DO NOT OPEN WHEN ENERGIZED.

The following notices relate to the following modules:

- MD720-3
- MD741-1

Please note the following notices when using these modules in a hazardous location.

General notices on use in hazardous areas

⚠ WARNING

Risk of explosion when connecting or disconnecting the device

EXPLOSION HAZARD

DO NOT CONNECT OR DISCONNECT EQUIPMENT WHEN A FLAMMABLE OR COMBUSTIBLE ATMOSPHERE IS PRESENT.

⚠ WARNING

Replacing components

EXPLOSION HAZARD

SUBSTITUTION OF COMPONENTS MAY IMPAIR SUITABILITY FOR CLASS I, DIVISION 2 OR ZONE 2.

General notices on use in hazardous areas according to ATEX

⚠ WARNING

Requirements for the cabinet/enclosure

When used in hazardous environments corresponding to Class I, Division 2 or Class I, Zone 2, the device must be installed in a cabinet or a suitable enclosure.

To comply with EU Directive 94/9 (ATEX95), this enclosure must meet the requirements of at least IP54 in compliance with EN 60529.

⚠ WARNING

Suitable cables for temperatures in excess of 70 °C

If the cable or conduit entry point exceeds 70 °C or the branching point of conductors exceeds 80 °C, special precautions must be taken. If the equipment is operated in an air ambient between 50 °C and 70°C, only use cables with admitted maximum operating temperature of at least 80 °C.

⚠ WARNING

Protection against transient voltage surges

Provisions shall be made to prevent the rated voltage from being exceeded by transient voltage surges of more than 40%. This criterion is fulfilled, if supplies are derived from SELV (Safety Extra-Low Voltage) only.

5.3 GSM/GPRS modem MD720-3

Introduction

This section describes the design of the MD720-3 modem, its connectors and display elements.

5.3.1 Displays and connectors

The following figure shows the front view of the MD720-3 modem.

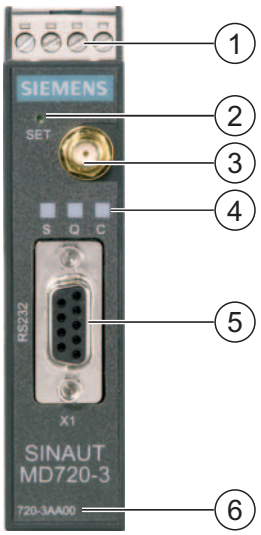

1 Connector for 24 V DC power supply
2 SET button for service functions
3 Antenna connector
4 Display elements
5 9-pin connector X1 (RS-232 female)
6 Order number of the modem

Front view of the MD720-3 modem

LED displays of the MD720-3

The following table summarizes the meaning and activity of the three LEDs on the front of the modem.

Table 5- 1 Meaning of the LEDs on the front of the MD720-3

LED	Status	Description
S, Q, C together	Flash on and off in sequence (fast) Flash slowly (in sync) Flash on and off in sequence (slow) Flash fast (in sync)	Booting Service mode Update Error
S (Status)	Flashes slowly Flashes fast	Waiting for PIN input PIN error/ SIM error
Q (Quality)	Flashes slowly Flashes once at intervals Flashes twice at intervals Flashes three times at intervals Always ON OFF	Logging into GSM network Field strength inadequate Field strength adequate Field strength good Field strength very good Waiting for PIN
C (Connect)	Flashing	Terminal mode activated

Flashes slowly: once per second; flashes fast: 4 times per second

Pinout of the X1 port

The X1 port is designed as a 9-pin D-sub miniature female connector. The female connector can be changed to male with the supplied "pin" gender changer. As an RS-232 port, the pinout corresponds to that of a standardized PC connector.

Table 5- 2 Pinout of the X1 RS-232 connector

Illustration	Pin no.	Signal name	Signal direction	Remark
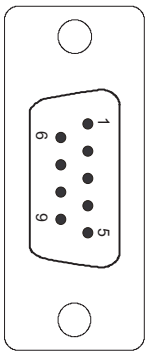	1	DCD	Output	
	2	RXD	Output	
	3	TXD	Input	
	4	DTR	Input	
	5	GND		
	6	DSR	Output	
	7	RTS	Input	
	8	CTS	Output	
	9	RI / T	Output	

Standard connecting cable for the X1 port

The TIM module is connected to the 9-pin RS-232 X1 connector (female with pin gender changer). The following standard connecting cable is available.

Table 5- 3 Standard connecting cable for the RJ-232 port

Order no.	Description	Illustration
6NH7701-5AN	Cable for connecting • the GSM modem MD720-3 (X1 port) with a TIM 3V-IE / TIM 4 (RS-232) for data transmission or • the GSM modem MD720-3 (X1 port) with a PC (serial port / COM port) for configuration and service Cable length 2.5 m	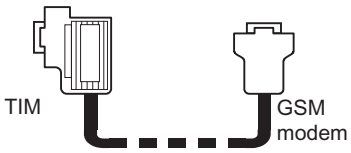

Antenna connector

The jack for connecting an antenna cable with an SMA connector is located at the top of the front panel.

- Impedance: Approx. 50 ohms

CAUTION
Only use antennas from the range of accessories SINAUT Telecontrol intended for the MD720-3 modem. Other antennas may have detrimental effects on the device characteristics and may even cause damage.

Connecting to the power supply

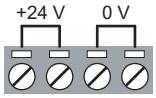

Figure 5-1 Connector for 24 V DC power supply

The screw terminals at the top are for connecting the power supply source:

- 24 V DC (nominal), I_{typ} 260 mA

The two screw terminals on the left (24 V) are connected internally (see Figure). The two screw terminals on the right (0 V) are connected internally.

Installation on a 35 mm standard rail

The MD720-3 is intended for installation on DIN rails complying with DIN EN 50022. There is a suitable fastener on the rear of the device.

Table 5- 4 Dimensions of the MD720-3 modem

MD720-3	Dimensions
W x H x D (mm)	22.5 x 99 x 114
Depth with connected cable (mm)	approx. 170

5.3.2 Connecting the MD720-3 to the TIM and antenna

The following figure shows how the GSM modem MD720-3 is connected to a TIM over RS-232 and to an antenna.

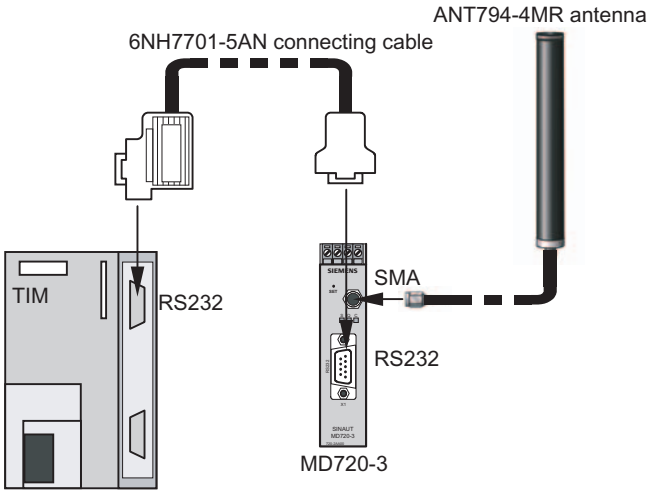

Figure 5-2 Connecting the MD720-3 to a TIM over RS-232 and to an antenna

5.3.3 Prerequisites for operation

Requirements depending on the transmission method

- Transmission using CSD (Circuit Switched Data)

  The following requirements must be met to use the SINAUT MD720-3 in terminal mode:

  – SIM card of a GSM network provider with activated CSD data service 9 600 bps and call number for data calls

  – Availability of a GSM network

- Transmission via GPRS using the MSC protocol

  The following is required to use the SINAUT MD720-3 for data transmission by GPRS:

  – A subscriber contract with GSM network operator that supports GPRS

  – SIM card for enabling GPRS for the user by the network operator

IP address of the partner

To allow the MD720-3 to establish a VPN connection actively, the partner must have a fixed IP address. Many Internet Service Providers (ISPs), however, assign the IP addresses dynamically; in other words, the IP addresses of the computers or networks with access to the Internet change. A fixed IP address can be obtained in the following ways:

– Fixed IP address with dedicated line to the GPRS provider

  The partner is connected directly to the GPRS provider over a leased dedicated line. The network operator then normally assigns a fixed IP address.

– Fixed IP address from Internet Service Provider

  The partner is available over the Internet and a fixed IP address has been assigned to it by the Internet service provider. (Can be obtained from several Internet service providers.)

5.3.4 Further documentation

You will find further information on the MD720-3 GSM modem on the SIMATIC NET Manual Collection (DVD ships with every product). The separate manual on the MD720-3 on this CD, includes among other things information on the following topics:

- Inserting the SIM card
- Connecting up the device and starting up
- Service functions

You will also find more detailed information on the GSM antenna SINAUT 794-4MR on the SIMATIC NET Manual Collection.

5.4 GPRS/GSM router MD741-1

Introduction

This section describes the design of the MD741-1 router, its connectors and display elements.

5.4.1 Displays and connectors

The following figure shows the front view of the MD741-1 router.

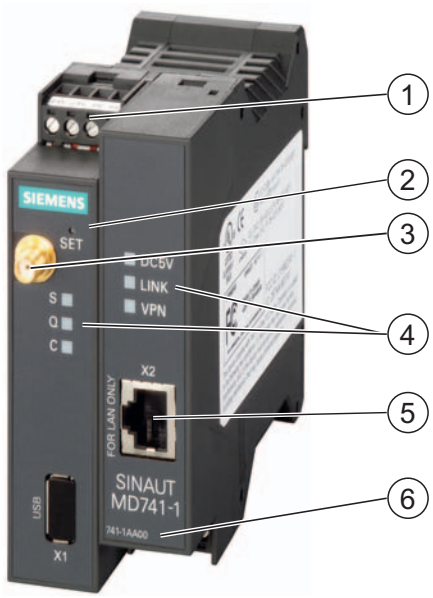

1 Connector for 24 V DC power supply
2 SET button for service functions
3 Antenna connector
4 Display elements
5 Ethernet connector X2 (female RJ-45)
6 Order number of the modem

Front view of the MD741-1 router

LED displays of the MD741-1

The following tables summarize the meaning and activity of the LEDs on the front of the router.

Table 5- 5 Meaning of the LEDs (DC5V, STAT, LINK, VPN) on the front panel of the MD741-1

LED	Color	Status	Meaning
DC5V	Green	ON	Device turned on, power supply present
		OFF	Device turned off, no power supply
LINK	Yellow	ON	Ethernet connection to local computer or LAN established
		OFF	Ethernet connection to local computer or LAN not established
VPN	Yellow	ON	VPN tunnel established[1)]
		OFF	VPN tunnel not established

1) Shortly after turning on the MD741-1, the VPN LED is lit briefly although the VPN tunnel is not active. Cause: Self-test of the components while the device boots.

Table 5- 6 Meaning of the LEDs (S, Q, C) on the front panel of the MD741-1

LED	Status	Meaning
S, Q, C together	Flash on and off in sequence (fast)	Booting
	Flash on and off in sequence (slow)	Update 1)
	Flash fast (in sync)	Error
S (Status)	Flashes slowly	Waiting for PIN input
	Flashes fast	PIN error/ SIM error
	OFF	No GPRS connection
	ON	GPRS connection exists
Q (Quality)	Flashes slowly	Logging into GSM network
	Flashes once at intervals	Field strength not adequate or unknown 2)
	Flashes twice at intervals	Field strength adequate
	Flashes three times at intervals	Field strength good
	Always ON	Field strength very good
	OFF	Waiting for PIN
C (Connect)	OFF	No connection
	ON	Connection to partner (with GPRS: Authentication and IP assignment were successful)

Flashes slowly: once per second; flashes fast: 4 times per second

1) During an update of the communication software, the LEDs first flash slowly in sequence. Later, only the S LED remains ON.

2) Shortly after logging in, the field strength is always signaled as minimal or unknown by the Quality LED flashing once. Cause: At this point in time, the device has only detected that there is a field strength present. The actual calculation of the field strength takes place at the next check after 15 seconds.

Service interface X1

This service interface is required when a firmware update is necessary for the modem section of the MD741-1.

Pinout of the X2 port

The connector of the Ethernet port is designed as an 8-pin RJ-45 jack. The pinout is shown in the following table.

Table 5- 7 Pinout of the RJ-45 Western jack for the Ethernet port

Illustration	Pin no.	Signal name	Signal direction	Remark
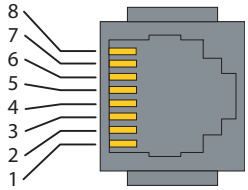	1	TXD+	Output	
	2	TXD-	Output	
	3	RXD+	Input	
	4	-		
	5	-		
	6	RXD-	Input	
	7	-		
	8	-		

There is no standard connecting cable available in the SINAUT range to connect the MD741-1 to Ethernet. Use the suitable Ethernet connecting cables (for example IE TP Cord) from the SIMATIC NET product range (catalog IK PI).

Antenna connector

The jack for connecting an antenna cable with an SMA connector is located at the top of the front panel.

- Impedance: Approx. 50 ohms

CAUTION
Only use antennas from the range of accessories SINAUT Telecontrol intended for the MD741-1 router. Other antennas may have detrimental effects on the device characteristics and may even cause damage.

Connecting to the power supply

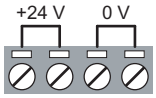

Figure 5-3 Connector for 24 V DC power supply

The screw terminals at the top are for connecting the power supply source:

- 24 V DC (nominal), I_{typ} 360 mA

The two screw terminals on the left (24 V) are connected internally (see Figure). The two screw terminals on the right (0 V) are connected internally.

Installation on a 35 mm standard rail

The SINAUT MD741-1 is intended for installation on DIN rails complying with DIN EN 50022. There is a suitable fastener on the rear of the device.

Table 5- 8 Dimensions of the MD741-1 router

MD741-1	Dimensions
W x H x D (mm)	45 x 99 x 114
Depth with connected antenna / Ethernet cable (mm)	approx. 170

5.4.2 Connecting the MD741-1 to the TIM and antenna

The following figure shows how the GPRS router MD741-1 is connected to a TIM over its Ethernet connector (IE) and how the SMA connector is connected to an antenna.

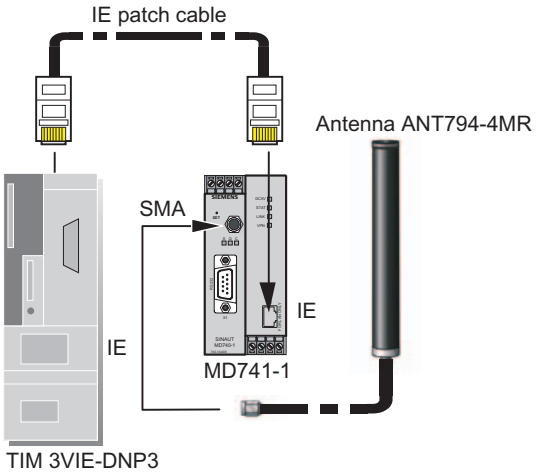

Figure 5-4 Connecting the MD741-1 to a TIM and an antenna

5.4.3 Prerequisites for operation

To use the MD741-1, the following requirements must be met:

- A subscriber contract with GSM network operator that supports GPRS
- SIM card for enabling GPRS for the user by the network operator

IP address of the partner

To allow the MD741-1 to establish a VPN connection actively, the partner must have a fixed IP address. Many Internet Service Providers (ISPs), however, assign the IP addresses dynamically; in other words, the IP addresses of the computers or networks with access to the Internet change. A fixed IP address can be obtained in the following ways:

- **Fixed IP address with dedicated line to the GPRS provider**

  The partner is connected directly to the GPRS provider over a leased dedicated line. The network operator then normally assigns a fixed IP address.

- **Fixed IP address from Internet Service Provider**

  The partner is available over the Internet and a fixed IP address has been assigned to it by the Internet service provider. (Can be applied for from several Internet service providers.)

- **Fixed DNS name from DynDNS service**

  To solve the problem of dynamic IP address assignment, DynDNS services can be used. With such a service, the partner can be reached using a fixed domain name regardless of its current dynamic IP address. Each time the IP address changes, the partner signals the new IP address to the DynDNS server so that the domain name on the DNS server is always assigned to the current IP address. Use of a DynDNS service is subject to entering a contract with a suitable provider, for example DynDNS.org or DNS4BIZ.com.

5.4.4 Further documentation

You will find further information on the GPRS/GSM MD741-1 router on the SIMATIC NET Manual Collection (DVD ships with every product). The separate manual on the MD741-1 on this CD, includes among other things information on the following topics:

- Commissioning
- Configuration
- Service functions

You will also find more detailed information on the GSM antenna SINAUT 794-4MR on the SIMATIC NET Manual Collection.

5.5 MD2 dedicated line modem

This section describes the design of the MD2 modem, its connectors, display elements and switches.

5.5.1 Displays and connectors accessible from the front

The following figure shows the view of the MD2 modem with the front panel closed.

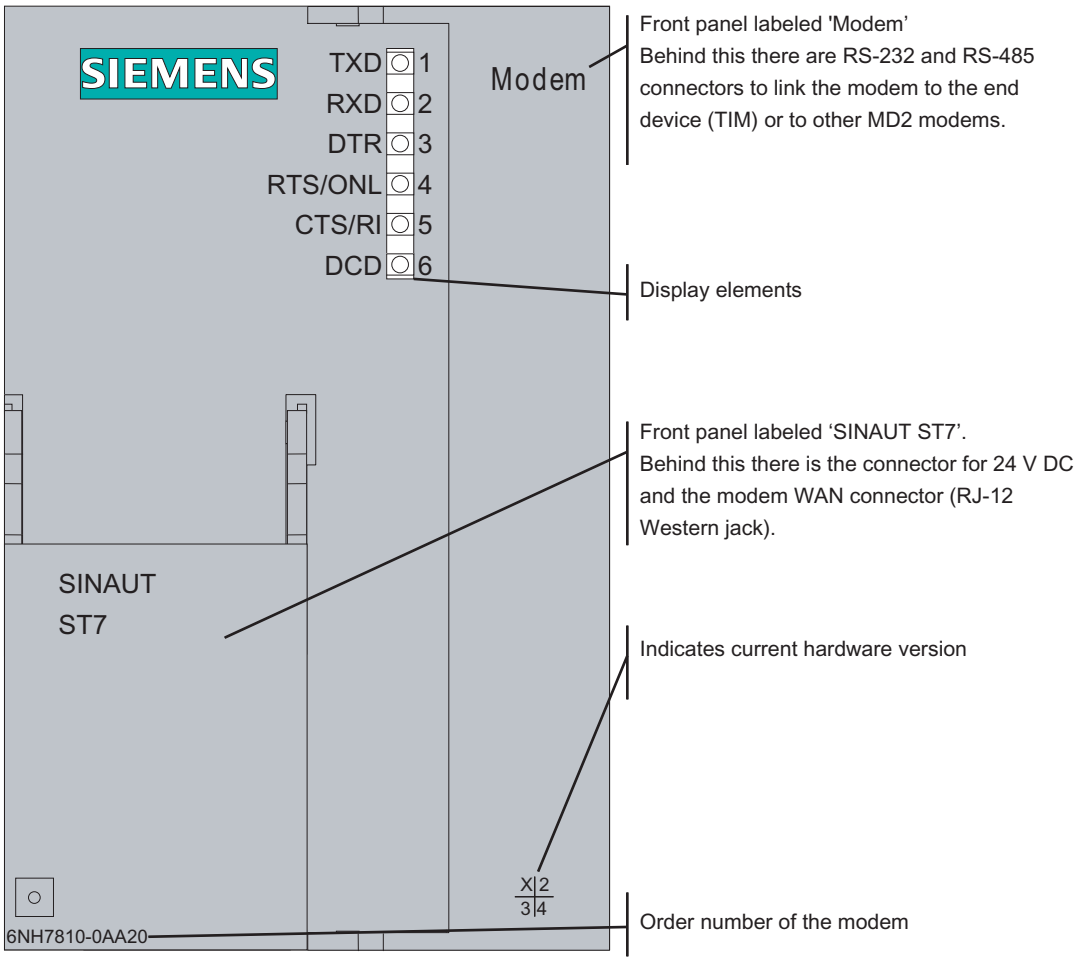

Figure 5-5 View of the MD2 modem with the front panel closed

LED displays of the MD2

The following table summarizes the meaning and activity of the six green LEDs on the front of the modem.

Table 5- 9 Meaning and activity of the LEDs on the front of the MD2

LED no.	Labeling	Description
1	TXD	Transmit data The LED flashes in rhythm with the data flow sent to the modem and to the WAN interface by the terminal device (for example TIM) over the RS-232 or RS-485 interface.
2	RXD	Receive data The LED flashes in rhythm with the data flow received by the modem over the WAN interface and transferred to the terminal device (for example TIM) over the RS-232 or RS-485 interface.
3	DTR	Data terminal ready Indicates the status of the DTR signal of the connected terminal (for example TIM). As soon as a terminal device has started up, it sets its DTR signal to 1 after which the "DTR" LED on the MD2 is lit continuously.
4	RTS	Request to send (RTS) Indicates the status of the RTS signal of the connected terminal (for example TIM). When a terminal device turns on the transmitter of the modem, it sets its RTS signal to 1. As long as RTS is set to 1, the "RTS" LED is lit on the MD2. The LED goes off as soon as the terminal device deactivates the RTS signal.
5	CTS	Clear to send (CTS) When the transmitter of the modem has been turned on by RTS, the modem signals back to the terminal device (for example TIM) that it is clear to send by setting its CTS signal to 1. As long as CTS is set to 1, the "CTS" LED on the MD2 modem is lit. The LED goes off as soon as the terminal device deactivates the RTS signal and turns off the transmitter of the modem.
6	DCD/5V	Data carrier detect The "DCD" LED lights up as soon as the internal operating voltage of the MD2 modem is applied. Whenever the MD2 detects an adequate receive level on its receive channel, the "DCD" LED goes off.

View of the MD2 modem with the front panel closed

The following figure shows the front view of the MD2 modem with the front panel open to show the connectors located behind it.

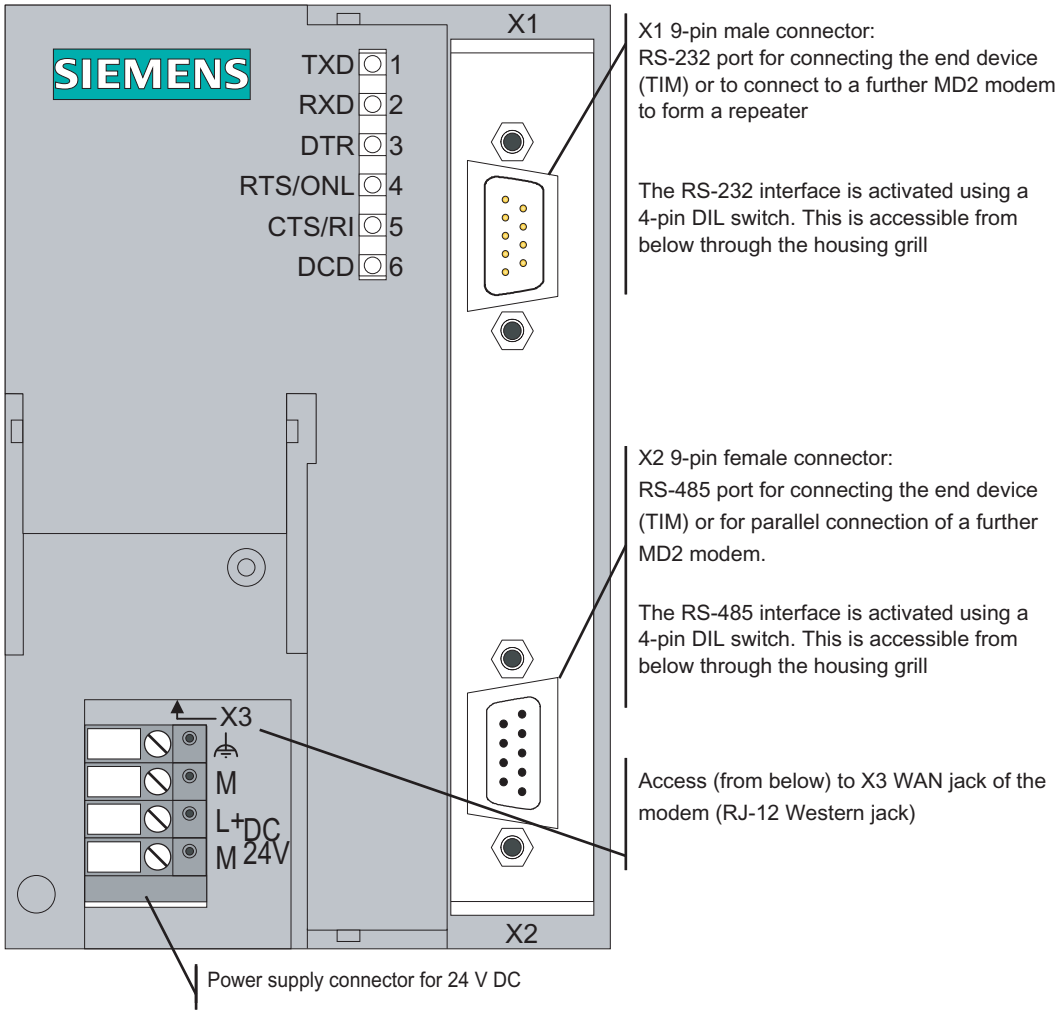

Figure 5-6 View of the MD2 modem with the front panel open

Pinout of the RS-232 and RS-485 ports

The X1 connector is designed as a 9-pin D-sub miniature male connector. The pinout is shown in the following table. As an RS-232 port, the pinout corresponds to that of a standardized PC connector.

The RS-232 interface can be activated using a 4-pin DIL switch accessible from below through the housing grill.

Table 5- 10 Pinout of the X1 RS-232 connector

Illustration	Pin no.	Signal name	Signal direction	Remark
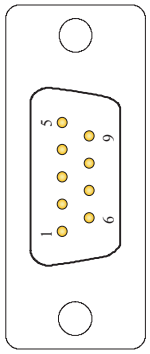	1	DCD	Output	
	2	RXD	Output	
	3	TXD	Input	
	4	DTR	Input	
	5	GND		
	6	DSR	Output	
	7	RTS	Input	
	8	CTS	Output	
	9	RI / T	Output	

The X2 RS-485 connector is designed as a 9-pin D-sub miniature female connector. The pinout is shown in the following table.

The RS-485 interface can be activated and the terminating resistor activated using a 4-pin DIL switch accessible from below through the housing grill.

Table 5- 11 Pinout of the X2 RS-485 connector

Illustration	Pin no.	Signal name	Signal direction	Remark
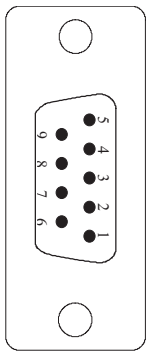	1			
	2			
	3	Data B	Bidirectional	
	4			
	5	M5	-	0 V for bus termination in connector*)
	6	P5	-	5 V for bus termination in connector*)
	7			
	8	Data A	Bidirectional	
	9			

*) It is advisable to activate the terminating resistor for the RS-485 bus in the connector and not in the modem itself.

Standard connecting cable for the RS-232 and RS-485 port

The TIM module, one or more MD2 modems, or another terminal with a suitable interface can be connected to the 9-pin X1 RS-232 connector or X2 RS-485 connector.

The following standard connecting cables are available for the X1 and X2 connectors.

Table 5- 12 Standard connecting cables for the RS-232 and RS-485 port

Order no.	Description	Illustration
6NH7701-4AL	Connecting cable to connect the MD2 modem (RS-232) to a TIM 3V-IE, TIM 4 or TIM 4R-IE (RS-232) or other DTE with a 9-pin RS-232 interface with an identical pin assignment. Cable length 1.5 m	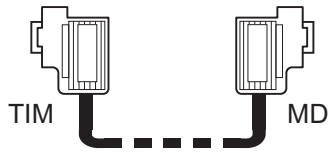
6NH7701-4DL	Connecting cable to connect the MD2 modem (RS-485) to a TIM 4 or TIM 4R-IE (RS-485) or other DTE with a 9-pin RS-485 interface with an identical pin assignment. Cable length 1.5 m	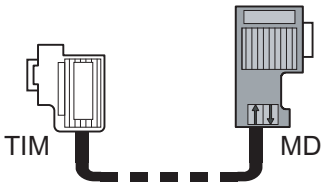
6NH7701-1CB	Cable for connecting two MD2 modems (RS-232) to form a repeater. Cable length 0.3 m	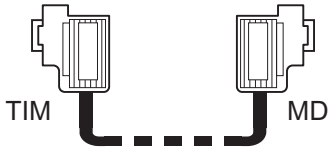

Note

The standard connecting cable 6NH7701-4AL for connecting the modem to a TIM module (RS-232) is connected to the modem "head first" so that the cable comes away towards the top.

With a TIM 4, the standard connecting cable is also connected from above. With the TIM 3V-IE variants and the TIM 4R-IE, the cable is connected from below.

The following figures show how the connecting cables listed above are assembled.

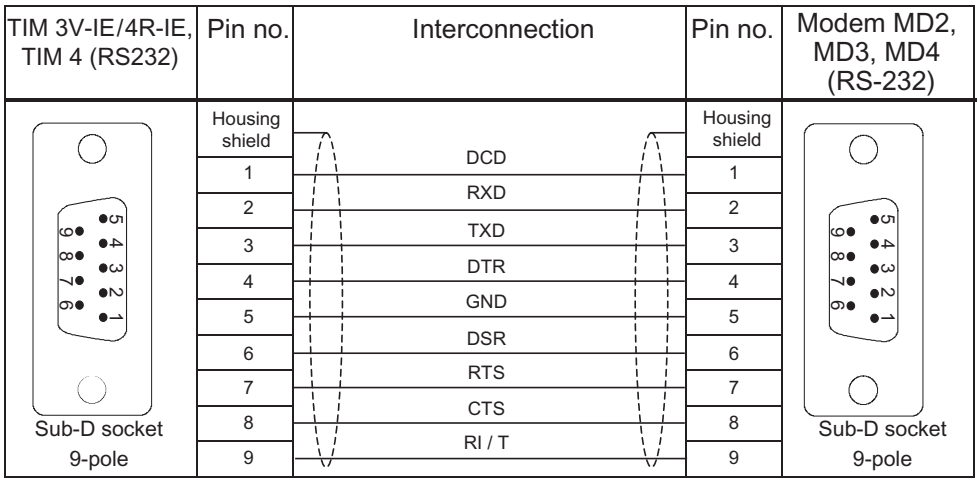

Figure 5-7 Assembly of the standard connecting cable 6NH7701-4AL

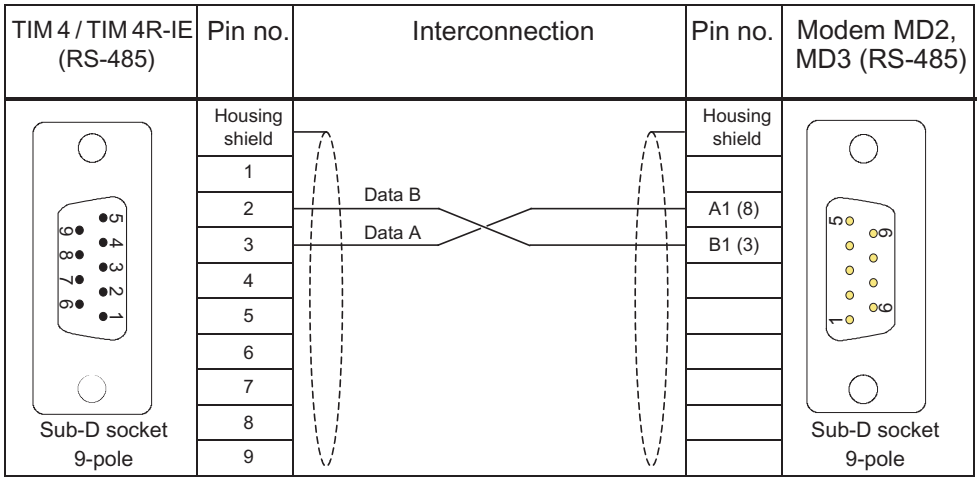

Figure 5-8 Assembly of the standard connecting cable 6NH7701-4DL

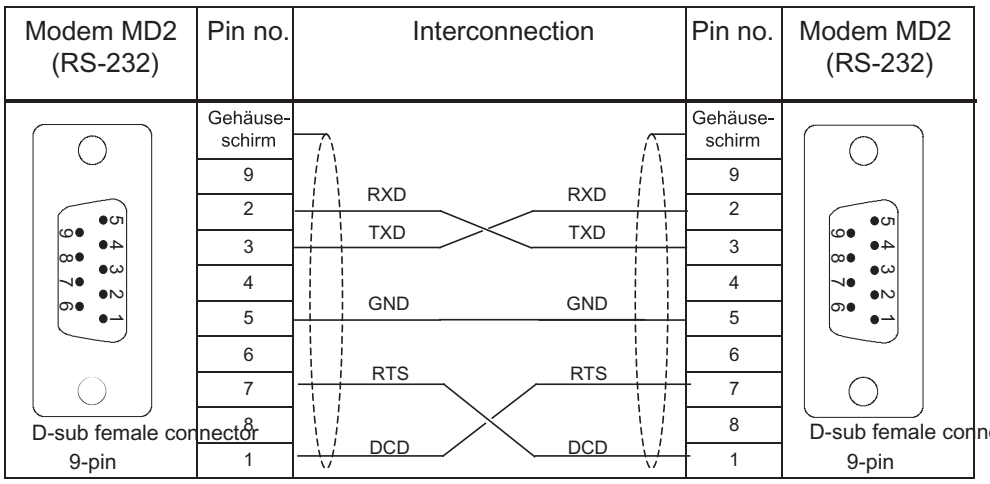

Figure 5-9 Assembly of the standard connecting cable 6NH7701-1CB

You will find examples of connecting the MD2 to a TIM, parallel connection of more than one MD2 to connect a star ring network to a TIM, or the interconnection of two MD2s to form a repeater below in the section Connecting the MD2 with TIM, LTOP and dedicated line (Page 215).

5.5.2 Configuration switches accessible from above

The following figure shows the MD2 modem from above. It indicates the location of the 5-pin and 10-pin DIL switches that are accessible from above.

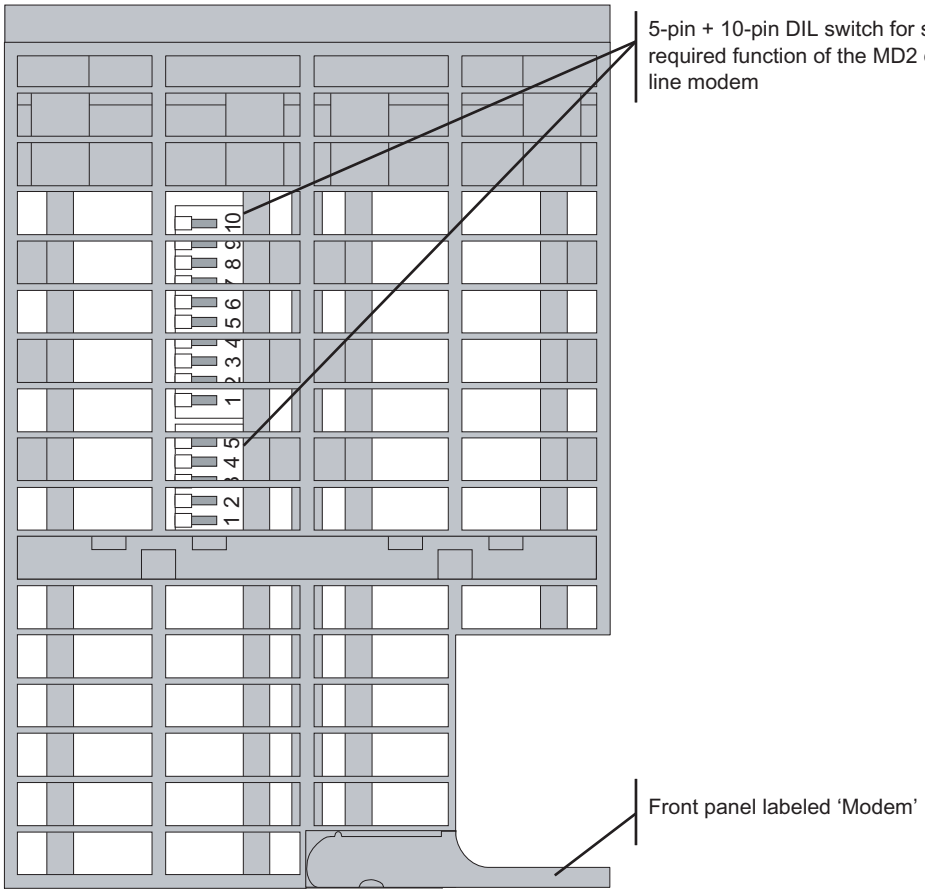

Figure 5-10 View of the MD2 modem from above

Settings with the DIL switches accessible from above

The following figure shows the settings possible on the 5-pin and 10-pin DIL switches. These switches can be accessed from above through the grill in the modem housing.

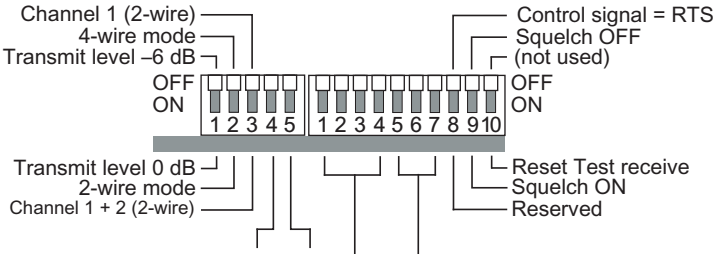

Baud rate	4	5
1200	OFF	OFF
2400	OFF	ON
9600	ON	OFF
19200	ON	ON

Mode	1	2	3	4
Normal	OFF	OFF	OFF	OFF
Repeater	OFF	OFF	ON	OFF
With RS-485 port	OFF	OFF	ON	ON
Test f H constant	ON	OFF	OFF	ON
Test send RS485	ON	OFF	ON	OFF
Test send	ON	OFF	ON	ON
Test receive	ON	ON	OFF	OFF
Test f_{baud}	ON	ON	OFF	ON
Test f_{L}	ON	ON	ON	OFF
Test f_{H}	ON	ON	ON	ON

Character format	5	6	7
Asynchronous 11 bits	OFF	OFF	OFF
Asynchronous 10 bits	OFF	OFF	ON

Figure 5-11 Possible settings with the DIL switches accessible from above

When the MD2 modem ships, all DIL switches are in the OFF position. This corresponds to the following basic setting:

- Transmit level –6 dB
- 4-wire mode
- Channel 1 ON (fixed setting for 4-wire mode)
- Baud rate 1200 bps
- Normal operating mode
- Message consists of 11-bit asynchronous characters
- Control output switched with RTS (only relevant for wireless connection)

The following table contains more information on configuring these default settings individually.

Table 5- 13 Settings on the 5-pin DIL switch

Setting on DIL switch	Meaning
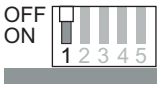	Transmit level –6 dB / -15 dB For more detailed information, refer to the description of the 10-pin DIL switch at switch 10.
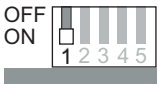	Transmit level 0 dB / -9 dB For more detailed information, refer to the description of the 10-pin DIL switch at switch 10. This allows the distance to be increased without regeneration.
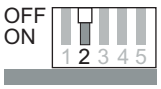	4-wire mode This setting is necessary if a separate wire pair is used for the transmit and for the receive direction. In this mode, the setting of switch 3 is irrelevant.
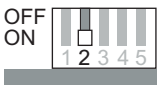	2-wire mode This setting is necessary if a common wire pair is used for the transmit and receive direction. In this mode, the setting of switch 3 is relevant. This is then used to set whether only one 2-wire line is actually connected (channel 1) or whether two 2-wire lines are connected (channel 1+2), for example, in a master station when communication to the stations is over two separate 2-wire connections (’small star network’).
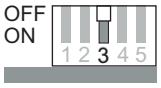	Channel 1 (2-wire) In 2-wire mode, only channel 1 is used; in other words, only one 2-wire line is connected to the modem (see also switch 2).
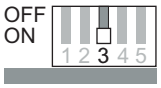	Channel 1+2 (2-wire) In 2-wire mode, channels 1+2 are used; in other words, two separate 2- wire lines are connected to the modem (see also switch 2).
	Baud rate 1200 bps (see also note)
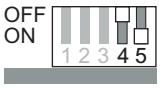	Baud rate 2400 bps (see also note)

Setting on DIL switch	Meaning
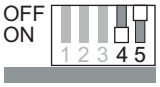	Baud rate 9600 bps
	Baud rate 19200 bps

Note

The transmission speeds 1200 and 2400 bps are suitable for lines whose bandwidth is limited to the normal voice band (300 Hz – 3400 Hz). This is typically the case with lines leased from public telephone companies. For the MD2 modem, there is an approval from the German Telekom for connection to transmission paths with analog connection points (2-wire) and 3.1 kHz effective bandwidth (300 Hz – 3400 Hz).

Table 5- 14 Settings on the 10-pin DIL switch

Setting on DIL switch	Meaning
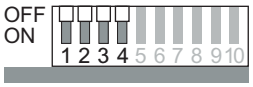	Normal mode Set this mode when the MD2 is connected to a TIM over its RS-232 port.
	Repeater Set this mode when two MD2s are connected together to form a repeater. The other parameters such as transmitter level, 2- or 4-wire and the baud rate must be set at the 5-pin DIL switch.
	Interface with RS-485 Set this mode when the MD2 is connected to a TIM or other MD2 over its RS-485 port.
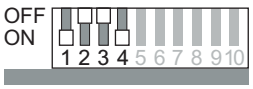	Test mode: Test f H constant *) In this test mode, the upper keying frequency is output permanently at the transmitter output of the modem. This mode can be used for level measurement.

Setting on DIL switch	Meaning
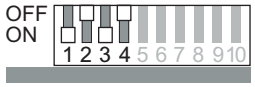	Test mode: Test send RS-485 *) In this test mode, a short message (2 bytes) in the asynchronous 11-bit format is output permanently at the transmitter output of the modem and on the RS-485 interface.
	Test mode: Test send *) In this test mode, a short message (2 bytes) in the asynchronous 11-bit format is output permanently at the transmitter output of the modem.
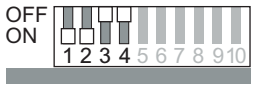	Test mode: Test receive *) This test mode, along with the "Test send RS-485" and "Test send" test modes, checks the function of the transmission line and the receiver unit of the modem.
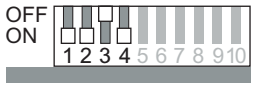	Test mode: Test f baud *) In this test mode, the lower and upper keying frequency is output alternately at the clock rate of the transmission speed at the transmitter output of the modem. This corresponds to the binary character sequence 01010101...
	Test mode: Test f L *) In this test mode, the lower keying frequency is output permanently at the transmitter output of the modem.
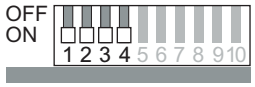	Test mode: Test f H *) In this test mode, the upper keying frequency is output permanently at the transmitter output of the modem.

*) For detailed explanations of the test modes, refer to Chapter 4 of the MD2 Modem Description 6NH7811-0AA21 that can be ordered separately.

Setting on DIL switch	Meaning
	Character format: Message consisting of a series of asynchronous characters, each 11-bit (1 start bit, 8 data bits, 1 parity bit, 1 stop bit). This is the standard setting for sending SINAUT messages. In this case, message format FT 1.2, based on 11-bit asynchronous characters is normally used for transmitting over dedicated lines.
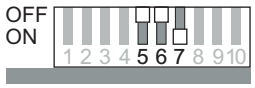	Character format: Message consisting of a series of asynchronous characters, each 10-bit (1 start bit, 8 data bits, 1 stop bit). This setting is required for transmitting SINAUT ST7 messages over dedicated lines with the optional FT 2 message format. This format is based on 10-bit asynchronous characters.

Setting on DIL switch	Meaning
	Control output switched with RTS A floating optical relay is provided on pins 1 and 6 of the RJ-12 Western plug. This is active as long as the terminal device (TIM) outputs the RTS signal (request to send) to the MD2 modem. This control signal can be used to switch on a wireless device when the MD2 modem is used in conjunction with a wireless system.
	Reserved
	Squelch OFF *) This is a mandatory setting for the MD2 in conjunction with a TIM.
	Squelch ON *) This setting is not permitted for the MD2 in conjunction with a TIM.
	Reset "Test receive" off / normal transmit level *) Depending on the selected mode, this switch has two meanings: In the "Test receive" mode, this switch setting has no function. In all other modes, the transmit level for operation of the modem on normal dedicated lines is set depending on switch S1 (5-pin DIL switch) to 0 dB (S1 = ON) or –6 dB (S1 = OFF).
	Reset "Test receive" on / reduced transmit level *) Depending on the selected mode, this switch has two meanings: In the "Test receive" mode, the test operation can be reset. In all other modes, the transmit level for operation of the modem on telephone company leased lines is reduced. Depending on switch S1 (5-pin DIL switch), the transmitter level is then set to –9 dB (S1 = ON) or to –15 dB (S1 = OFF).

*) For detailed explanations of the squelch function and "Reset Test receive", refer to Chapter 4 of the MD2 Modem Description 6NH7811-0AA21 that can be ordered separately.

5.5.3 Connectors and configuration switches accessible from below

The following figure shows the MD2 modem from below with the X3 RJ-12 Western jack, the DIL switch for activating the RS-232 or RS-485 port and the DIL switch for activating the WAN terminating resistors.

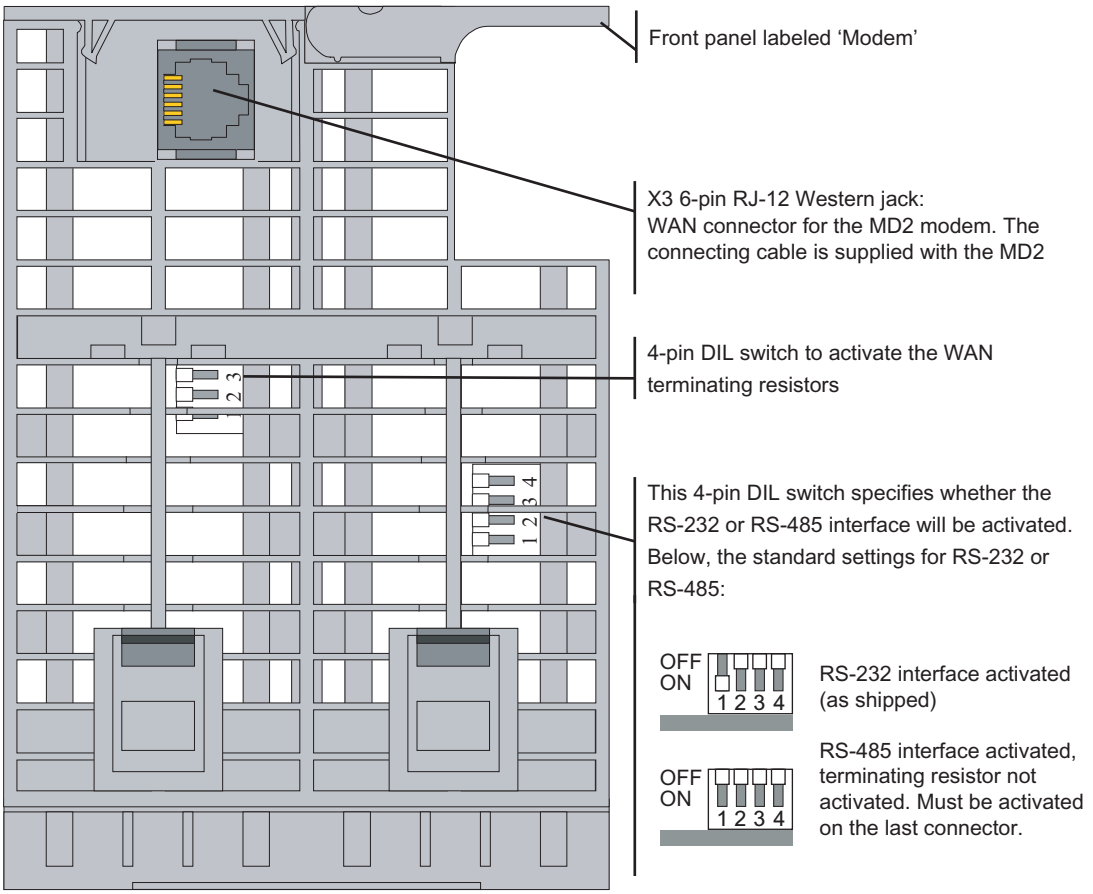

Figure 5-12 View of the MD2 modem from below

DIL switch for activating the RS-232 or RS-485 port

On the bottom of the modem housing, a 4-pin DIL switch is accessible with which you can specify whether the RS-232 or the RS-485 port is active. For RS-485 operation, you can also activate the terminating resistor. It is, however, recommended that you activate this terminating resistor on the RS-485 connector on the last MD2.

The following figure shows the possible settings in general.

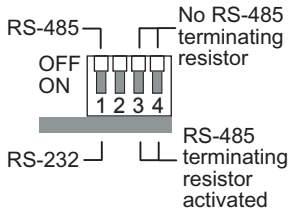

Figure 5-13 Possible settings on the 4-pin DIL switch to activate RS-232/RS-485

DIL switch for activating WAN terminating resistors

On the bottom of the MD2 housing, a further 4-pin DIL switch is accessible. This switch activates terminating resistors at the WAN end. The following figure summarizes the possible settings, the table lists the default settings.

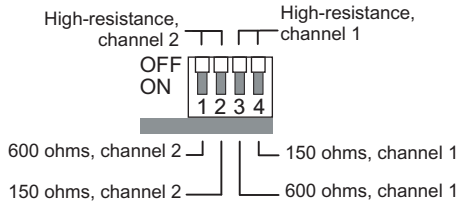

Figure 5-14 Possible settings for the WAN terminating resistors

Table 5- 15 Default settings for the WAN terminating resistors

Attachment type	Baud rate	Setting on DIL switch	Remark
End point 2-wire (channel 1) 2 x 2-wire (channel 1+2) 4-wire	1200 bps 2400 bps	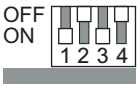	The MD2 is located at the beginning or end of a 2-wire or 4-wire line and is set to a transmission speed of 1200 or 2400 bps.
	9600 bps 19200 bps	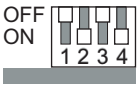	End point as above but with transmission speed set to 9600 or 19200 bps.
Tapping point 2-wire (channel 1)	1200 bps 2400 bps	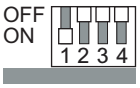	The MD2 is not located at the beginning or end of a 2-wire line; it taps into this 2-wire line along the way with high resistance. The transmission speed is set to 1200 or 2400 bps.
	9600 bps 19200 bps	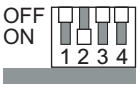	End point as above but with transmission speed set to 9600 or 19200 bps.
Tapping point 4-wire	1200 bps 2400 bps 9600 bps 19200 bps	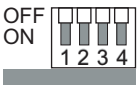	The MD2 is not located at the beginning or end of a 4-wire line; it taps into this 4-wire line along the way with high resistance.

Pinout of the RJ-12 Western jack

The X3 connector is designed as a 6-pin RJ-12 Western jack. The pinout is shown in the following table.

Table 5- 16 Pinout of the X3 RJ-12 Western jack for the MD2 modem

Illustration	Pin no.	Signal name	Signal direction	Remark
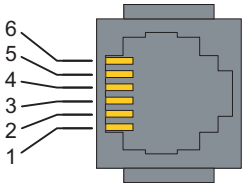	5	a1	Input or bidirectional (channel 1)	With 2-wire: Input and output channel 1 With 4-wire: Input
	2	b1		
	4	a2	Output or bidirectional (channel 2)	With 2-wire: Input and output channel 2 With 4-wire: Output
	3	b2		
	1	a RTS	Output	Output optical relay
	6	b RTS		

The RTS signal can be output over the floating optical relay at pins 1 and 6 of the RJ-12 connector.

The technical specifications of this output are as follows:

- max. connected voltage = 60 V AC/DC
- R_{ON} max = 3 ohms
- I_{max} = 400 mA

A suppressor circuit does not exist for the output.

Standard connecting cable for the RJ-12 port

The connecting cable 6NH7700-2AR60 ships with every MD2 modem. This allows the MD2 modem to be connected to an LTOP overvoltage protection module. The actual connection of the dedicated cable is on the LTOP overvoltage protection module using screw terminals.

The connecting cable can also be ordered as a spare under the number shown.

Table 5- 17 Standard connecting cable for the MD2 modem

Order no.	Description	Illustration
6NH7700-2AR60	Connecting cable with 2 x RJ-12 Western plugs for connection of an MD2 modem (RJ-12) to an LTOP overvoltage protection module (RJ-12). Cable length 6 m	

The pinout of the two RJ-12 plugs is identical.

Note

It is best to hold the cable just below the RJ-12 plug. This makes it easier to insert the plug than if you hold the RJ-12 plug itself. When inserting it, make sure that you can hear the RJ-12 connector click into place!

5.5.4 Connecting the MD2 with TIM, LTOP and dedicated line

Introduction

The following figures illustrate the various options for connecting the MD2 modem to a TIM or other MD2 modems as well as to a dedicated line over an LTOP.

For more detailed information on connecting, wiring up and setting the LTOP, refer to the section *Line transformer with LTOP overvoltage protection*.

Connecting an MD2 with a TIM over the RS-232 port

Only one (1) MD2 modem can be connected to a TIM over the RS-232 port. This allows the following end point and tapping point configurations.

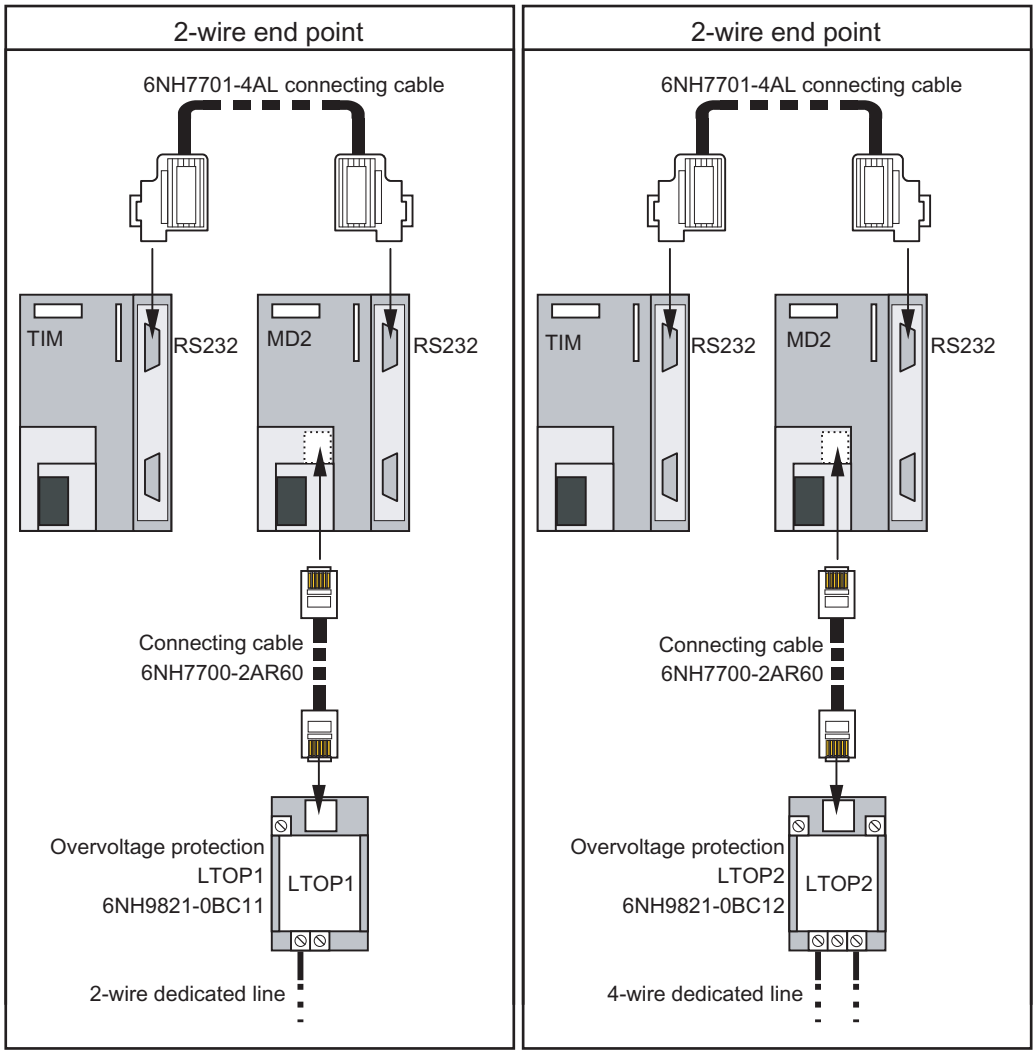

Figure 5-15 Connecting an MD2 to a TIM over RS-232, 2-wire and 4-wire end point variants

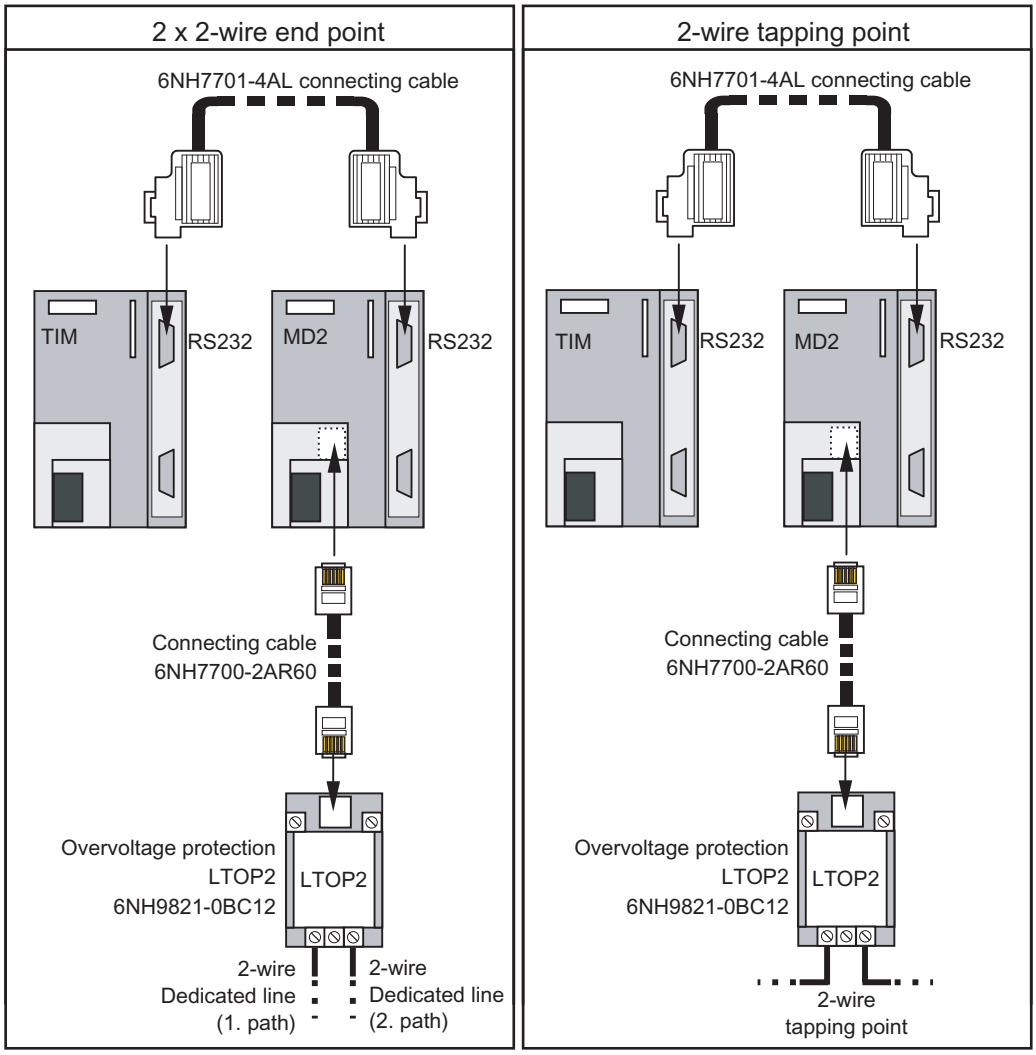

Figure 5-16 Connecting an MD2 to a TIM over RS-232, 2 x 2-wire end point and 2-wire tapping point variants

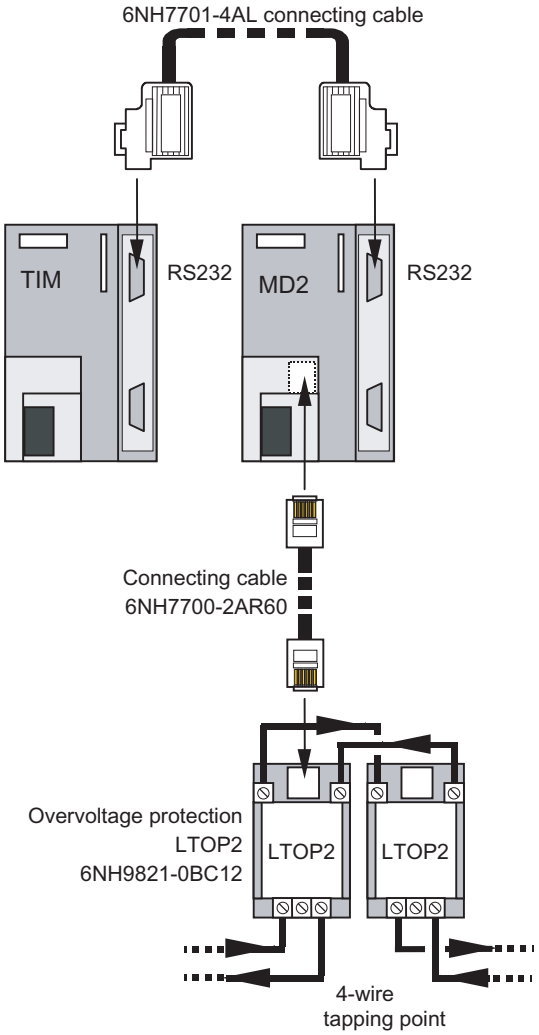

Figure 5-17 Connecting an MD2 to a TIM over RS-232, 4-wire tapping point variant

Note

Any TIM with an RS-232 port can be used, in other words, the TIM 3V-IE variants, the TIM 4R-IE and all TIM 4 types.

Connecting several MD2s with a TIM over the RS-485 port

Several MD2 modems can be connected to a TIM over the RS-485 port. This type of configuration is necessary when several dedicated lines come together on one TIM; in other words when connecting a star network. The following figure shows this configuration with standard components.

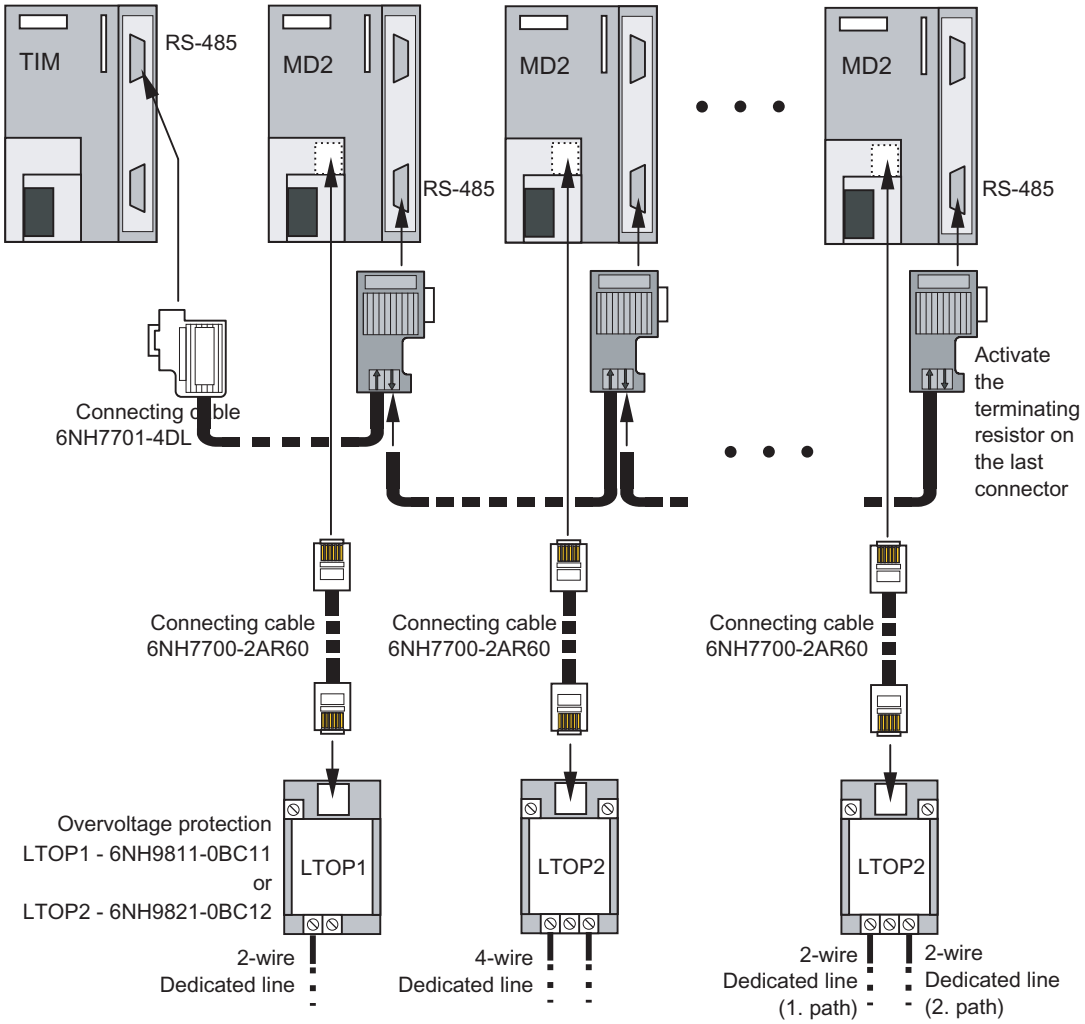

Figure 5-18 Connecting several MD2s to one TIM over RS-485, star-shaped convergence of several dedicated lines

For the connection from the TIM to the first MD2, the 6NH7701-4DL standard connecting cable is used. For the connection to the other modems, there is no preassembled connecting cable available. These can, nevertheless, be implemented with the standard components from the S7 range. The same parts can be used as when creating an MPI connection. As cable, we recommend 6XV1830-0AH10, and as connector 6ES7972-0BA12-0XA0. When necessary, the RS-485 terminating resistor can be activated in this connector.

Note

Any TIM with an RS-485 port can be used, in other words, all TIM 4 types and the TIM 4R-IE. The TIM 3V-IE variants only have an RS-232 interface. If necessary, a commercially available RS-232/RS-485 converter would need to be used.

Note

Do not forget to activate the terminating resistor for the RS-485 bus on the last connector using the slider switch.

The dedicated line is connected over the LTOP 1 or LTOP 2 overvoltage protection module. The figure shows various options for connecting a 1 x 2-wire, 1 x 4-wire or 2 x 2-wire end point per MD2 modem. Depending on the type of end point, a setting must be made on the modem at the 5-pin DIL switch accessible from above.

RS-485 operation of the MD2

If several MD2s are connected in parallel over the RS-485 port, remember the following when making the settings for the modem and setting the parameters for the TIM:

1. The MD2 modem must be set to the "interface with RS-485" mode using the 10-pin DIL switch.
2. The RS-485 interface must also be activated at the 4-pin DIL switch accessible from below.
3. The RS-485 interface of the TIM connected to the MD2 modem must also be activated at the 8-pin DIL switch accessible from above (applies to all TIM 4 types).
4. When setting the parameters for the WAN access of the TIM connected to the MD2, remember that a RTS-CTS delay ≥ 1 ms must be configured.

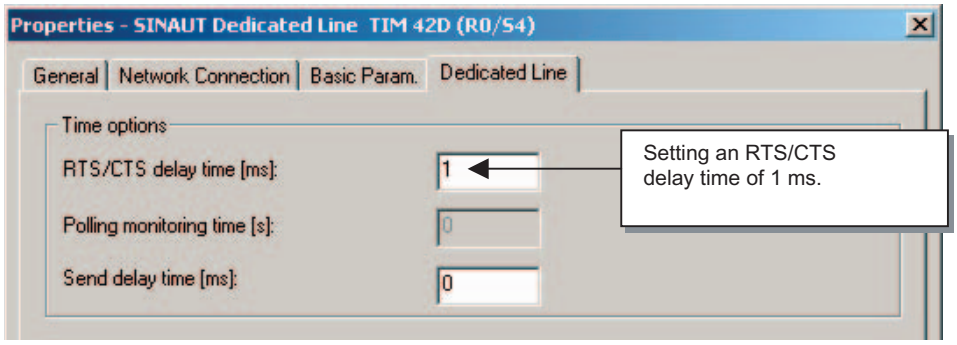

Figure 5-19 Setting parameters for the WAN access in the "Dedicated Line" tab

Note

If the MD2 is operated over its RS-485 port, no communication with the otherwise incompatible MD100 modem is possible. These are only compatible when the RS-232 port of the MD2 is used.

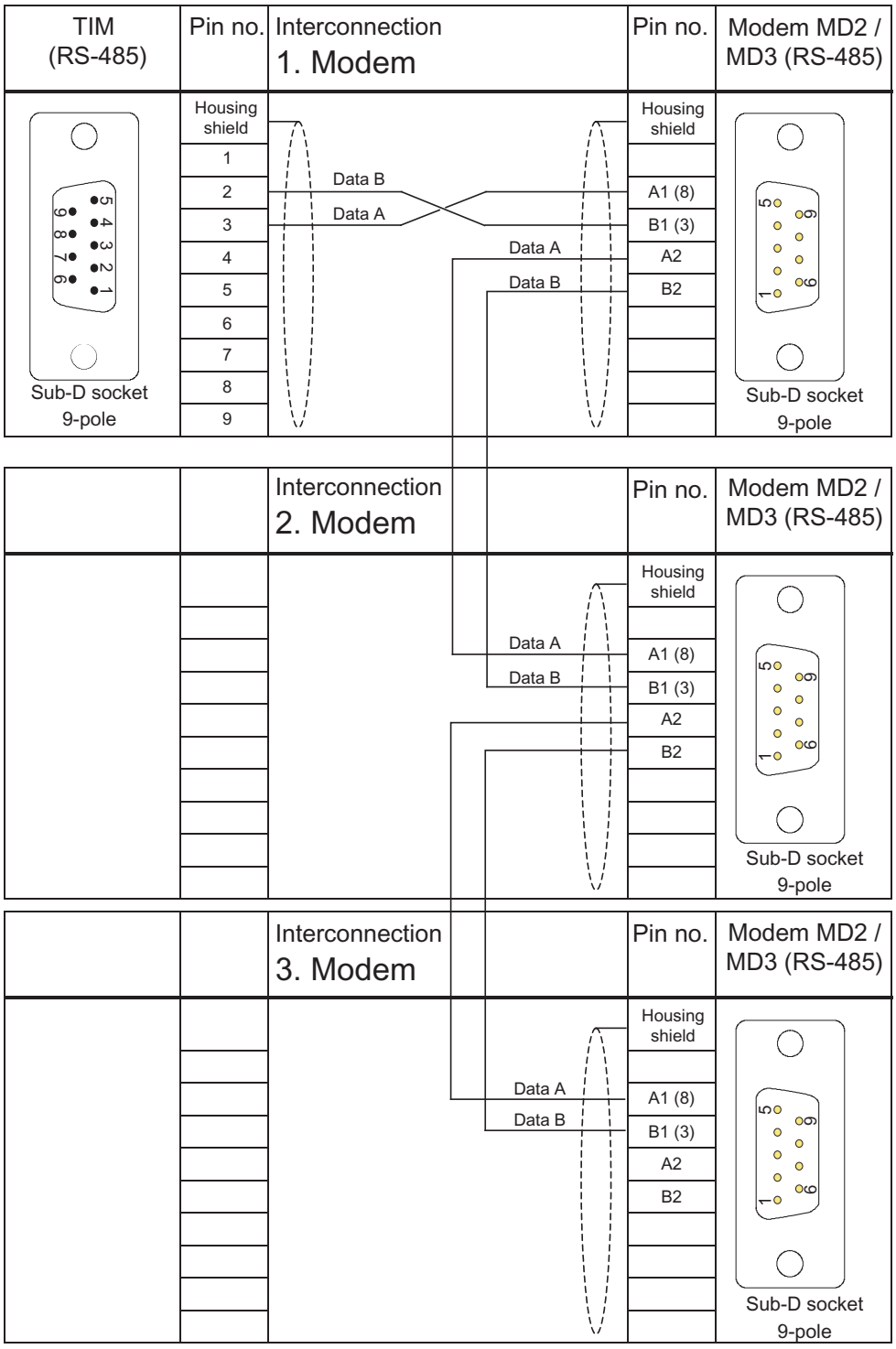

Figure 5-20 Assembly of the standard connecting cable 6NH7701-4DL (parallel connection of the MD2)

Connecting two MD2s to form a repeater

Two MD2 modems can be connected to form a repeater when the distances to be covered are too great (2-wire or 4-wire repeater). The repeater amplifies the signal and regenerates the individual characters. For more detailed information on calculating the distances that can be covered depending on the baud rate and number of tapped stations, refer to the following table.

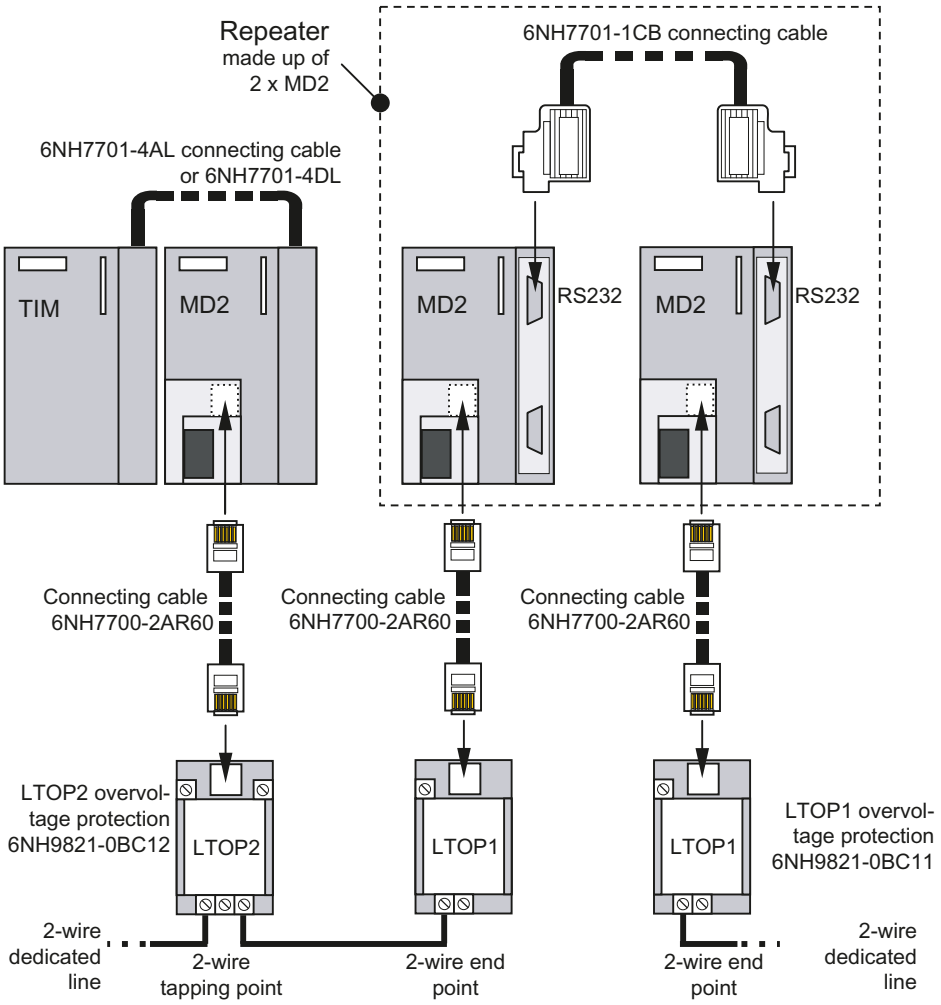

Figure 5-21 Two MD2s as 2-wire repeater with simultaneous 2-wire tapping of a TIM (for example TIM 3V-IE)

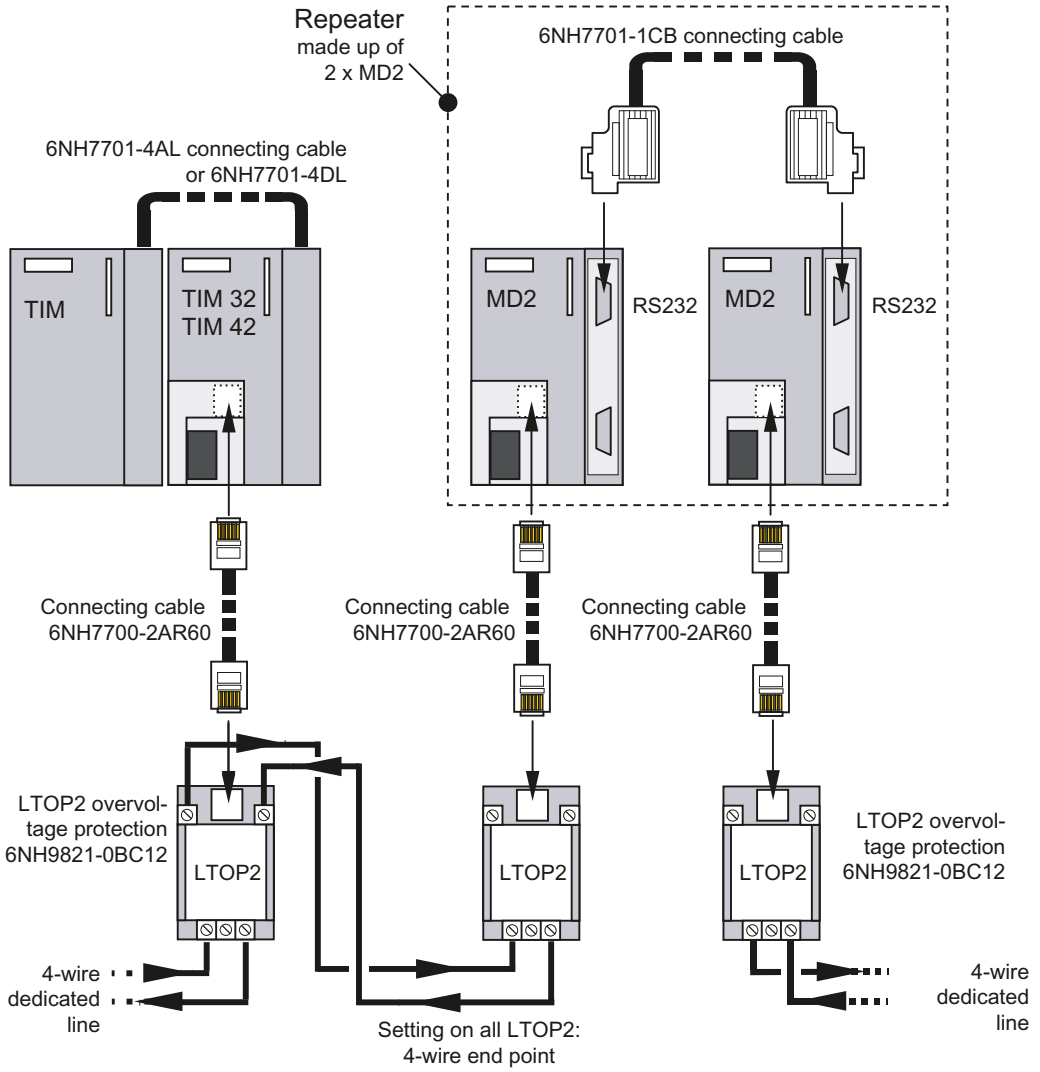

Figure 5-22 Two MD2s as 4-wire repeater with simultaneous 4-wire tapping of a TIM (for example TIM 3V-IE)

In most cases, a repeater is placed at a location where there is also an ST7 station that includes a TIM. For this reason, the schematics show not only the connection of two MD2s to form a repeater but also how a TIM is tapped into the 2-wire or 4-wire cable at the location of the repeater.

Transmission speeds and frequencies of the MD2 modem

Table 5- 18 Transmission speeds and frequencies of the MD2 modem

Transmission speed (bps)	Center frequency [Hz]	Frequency deviation Δf (Hz)	Lower keying frequency (Hz)	Upper keying frequency (Hz)
1200	1700	400	1300	2100
2400	2850	450	2400	3300
9600 / 19,200	27,200	6400	20,800	33,600

Attenuation values of the MD2 modem

Table 5- 19 Attenuation values dependent on the transmission speed and wire diameter

Transmission speed (bps)	Attenuation per km (dB) at wire diam. (mm)					Attenuation per LTOP (dB)	Insertion loss per tapping point (dB)
	0.6	0.8	0.9	1.2	1.4		
Line terminated with Z = 600 ohms							
1200	1.5	1.15	0.9	0.65	0.55	0.2	0.4
2400	1.85	1.4	1.1	0.75	0.6	0.2	0.2
Line terminated with Z = 150 ohms							
9600 / 19,200	4.3	3.2	2.6	1.8	1.5	1.0	0.2

The values in the table above are guidelines for communication lines without loading coils of the type 2 x 2 x A J-Y(St)Y (A = core diameter in mm).

Maximum range of the MD2 modem

Table 5- 20 Maximum range dependent on the transmission speed and wire diameter

Transmission speed (bps)	Maximum range (km)			
	Transmit level –6 dB *)		Transmit level 0 dB *)	
	With LTOP	Without LTOP	With LTOP	Without LTOP
Core diameter **0.6** mm				
1200	21.7 – NTP x 0.6	22 – NTP x 0.3	25.7 – NTP x 0.6	26 – NTP x 0.3
2400	17.6 – NTP x 0.4	17.8 – NTP x 0.2	20.8 – NTP x 0.4	21 – NTP x 0.2
9,600 / 19,200	7.2 – NTP x 0.6	7.6 – NTP x 0.1	8.6 – NTP x 0.6	9 – NTP x 0.1
Core diameter **0.8** mm				
1200	28.3 – NTP x 0.7	28.6 – NTP x 0.4	33.5 – NTP x 0.7	33.9 – NTP x 0.4
2400	23.2 – NTP x 0.5	23.5 – NTP x 0.2	27.5 – NTP x 0.5	27.8 – NTP x 0.2
9600 / 19,200	9.6 – NTP x 0.7	10.3 – NTP x 0.1	11.5 – NTP x 0.7	12.1 – NTP x 0.1
Core diameter **0.9** mm				
1200	36.2 – NTP x 0.9	36.6 – NTP x 0.5	42.8 – NTP x 0.9	43.3 – NTP x 0.5
2400	29.6 – NTP x 0.6	30 – NTP x 0.2	35 – NTP x 0.6	35.4 – NTP x 0.2

Transmission speed (bps)	Maximum range (km)			
	Transmit level –6 dB *)		Transmit level 0 dB *)	
	With LTOP	Without LTOP	With LTOP	Without LTOP
9600 / 19,200	11.9 – NTP x 0.9	12.6 – NTP x 0.1	14.2 – NTP x 0.9	15 – NTP x 0.1
Core diameter **1.2** mm				
1200	50.1 – NTP x 1.3	50.7 – NTP x 0.7	59.3 – NTP x 1.3	60 – NTP x 0.7
2400	43.4 – NTP x 0.8	44 – NTP x 0.3	51.4 – NTP x 0.8	52 – NTP x 0.3
9600 / 19,200	17.2 – NTP x 1.3	18.3 – NTP x 0.2	20.5 – NTP x 1.3	21.6 – NTP x 0.2
Core diameter **1.4** mm				
1200	59.2 – NTP x 1.5	60 – NTP x 0.8	70.1 – NTP x 1.5	70.9 – NTP x 0.8
2400	54.3 – NTP x 1	55 – NTP x 0.4	64.3 – NTP x 1	65 – NTP x 0.4
9600 / 19,200	20.6 – NTP x 1.5	22 – NTP x 0.2	24.6 – NTP x 1.5	26 – NTP x 0.2

NTP = number of tapping points

*) not permitted with postal leased lines. Transmit level must be set to –9 dB.

The values in the table are guidelines.

When calculating the maximum range, a power margin of 4 dB was included. This is to compensate for fluctuations in cable properties that experience has shown to occur in practise, and thus always ensure that sufficient signal level is available for problem-free data transmission. To calculate the values shown in the table, the following formula was used:

$$S_{\max} = \frac{[N_{\min}] + N_{Send} - N_{Res} - 2 \times A_{LTOP}}{A_{Cable}} - NTP \times \frac{A_{Insert} + 2 \times A_{LTOP}}{A_{Cable}}$$

A_{Insert}	Insertion loss per tapping point [in dB]
A_{Cable}	Attenuation per km of the cable used [in dB]
A_{LTOP}	Attenuation per LTOP [in dB]
NTP	Number of tapping points
N_{min}	Minimum receive level [in dB] (-43 dB for MD2, please use only absolute value in formula)
N_{Send}	Transmit level [in dB] (normally –6 dB or 0 dB)
N_{Res}	Power margin [in dB]
S_{max}	Max. range [in km]

Sample calculation:

For core diameter 0.8 mm, at 2400 bps, with LTOPs and transmit level –6 dB

$$S_{max} = \frac{[-43] + (-6) - 4 - 2 \times 0{,}2}{1{,}4} - NTP \times \frac{0{,}2 + 2 \times 0{,}2}{1{,}4}$$

$$S_{max} = \frac{43 - 6 - 4 - 0{,}4}{1{,}4} - NTP \times \frac{0{,}2 + 0{,}4}{1{,}4}$$

$$S_{max} = \frac{32{,}6}{1{,}4} - NTP \times \frac{0{,}6}{1{,}4} \longrightarrow S_{max} = 23{,}2 - NTP \times 0{,}5$$

Using the above formula, users can create their own calculations if the data of the cable being used is known.

For lines leased from the telephone company, the range calculation is unnecessary. Here, the public telephone company is responsible for an adequate signal level. Recommended cable quality for lines leased from a telephone company:

Analog connections of the type M.1020 or M.1025 in the landline network.

Determining the receive level

To determine the receive level, the test mode "Test $f_{H\ constant}$" must be set on the MD2 modem at the beginning of the trunk line. This modem then sends the upper keying frequency of the set baud rate constantly on the trunk line. The existing receive level can then be measured at the end of this trunk line. If the trunk line is a line with one or more tapping points, all the tapping points in the line must be included in the line (as well as LTOPs).

Note

When measuring the level, make sure that the 150-ohm (at 9600 / 19,200 bps) or 600-ohm (at 1200 / 2400 bps) terminating resistor is set at an end point or 6-kohm terminating resistor at a tapping point. You should also make sure that the line is not grounded during the measurement since the signal is symmetrical.

The MD2 modem can still received data down to a minimum received level of -43 dB. Which level is actually present at the reception location can then be checked with an oscilloscope or level measuring device. If this is not available, the level can also be measured with adequate accuracy using a normal voltmeter. To help you in this situation, the following table summarizes the level values and corresponding (approximate) voltage values (U_{eff} alternating voltage).

Table 5- 21 Comparison of level and voltage values

Level	Voltage value (AC)	Level	Voltage value (AC)	Level	Voltage value (AC)
+10 dB	2.45 V	-10 dB	245 mV	-25 dB	43.5 mV
0 dB	775 mV	-12 dB	195 mV	-30 dB	24.5 mV
-3 dB	552 mV	-15 dB	137 mV	-35 dB	13.7 mV
-6 dB	389 mV	-18 dB	97.8 mV	-40 dB	7.8 mV
-9 dB	274 mV	-20 dB	77.7 mV	-43 dB	5.5 mV

5.6 LTOP line transformer with overvoltage protection

Introduction

Copper dedicated lines are highly susceptible to electromagnetic interference. The coupling of extraneous voltages can be inductive or capacitive, for example due to the effects of lightning. Direct conductive coupling is also possible due to bad insulation.

The LTOP (**L**ine **T**ransformer with **O**vervoltage **P**rotection) limits extraneous voltages and overvoltages to a non-critical level. The floating transformer also provides electrical isolation preventing coupling of voltages into other cable sections.

5.6.1 Structure

The protection concept

The protection concept involves a combination of components whose functions supplement each other:

- Overvoltage suppressors filled with inert gas providing protection against high voltage (G1, G2)
- Inductors that limit the rise in current (L1, L2)
- Metal oxide varistors as fine protection (voltage dependent resistance; R1)
- Transformer for electrical isolation (T1)
- Suppressor diode to limit the secondary voltage of the transformer (V1)

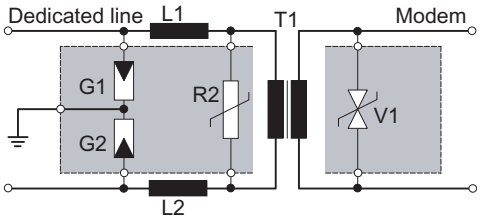

Figure 5-23 Circuit diagram of an LTOP unit

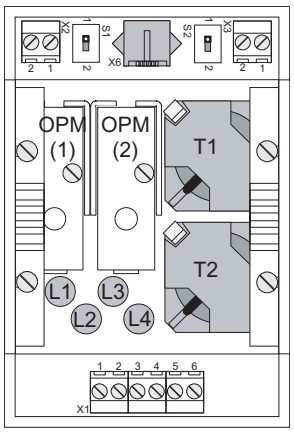

Figure 5-24 Location of the circuit elements of an LTOP 2 (view from above)

Note

The protection elements in the OPM (**O**vervoltage **P**rotection **M**odule) undergo high stress during discharge processes and progressively deteriorate. It is therefore recommended that you replace the OPMs approximately once a year. To be on the safe side, in regions with frequent thunderstorms this period should be reduced to approximately 6 months.

Structure of the LTOP variants

The housing contains either one LTOP unit (= LTOP 1) or two LTOP units (= LTOP 2). The following figures show the design of both LTOP variants with their connectors and configuration switches.

View from above	Schematic
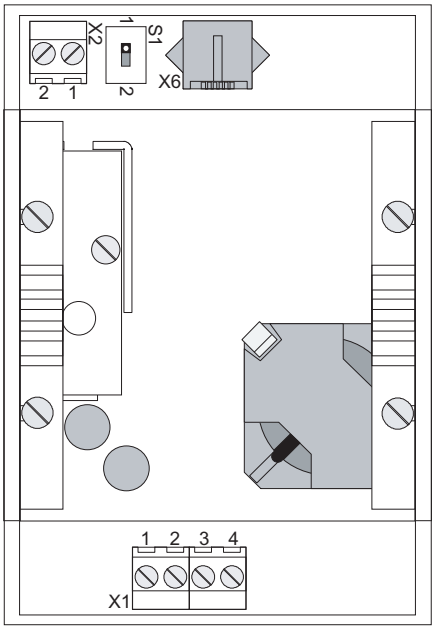	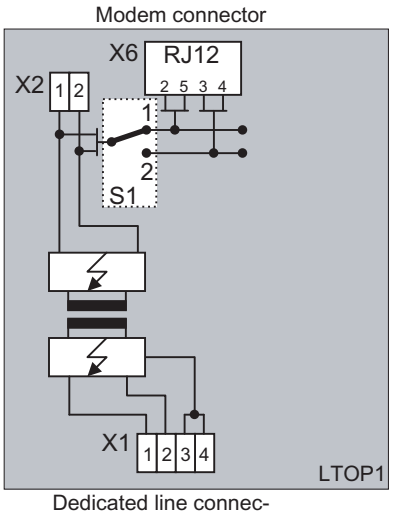

X1	Dedicated line (screw terminals 1, 2, 5, 6) Chassis (screw terminals 3, 4)
X2	Modem attachment 2-wire over screw terminals
X2 + X3	Modem attachment 4-wire over screw terminals
X6	2-wire/4-wire modem attachment over RJ-12 Western connector; for direct connection of the SINAUT ST7 MD2 modem over the standard connecting cable (RJ-12 – RJ-12) that ships with this modem.
S1 + S2	Configuration switches

View from above	Schematic
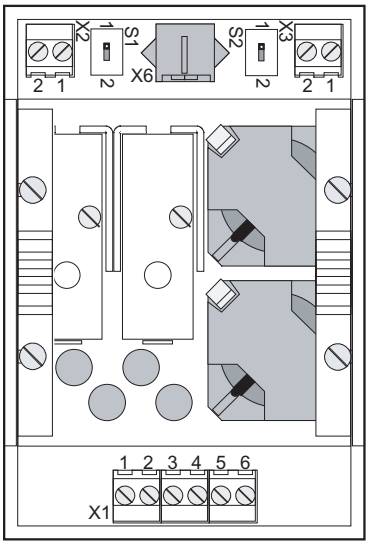	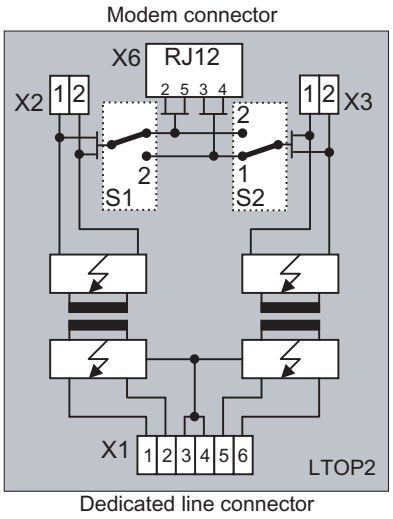

5.6.2 Connecting up the MD2 modem

The following figures show the connection of the standard cable modem MD2-3. The connection to the LTOP1 or LTOP2 is via the standard cable that ships with the modem. This cable has RJ-12 Western plugs at both ends.

Please make sure that the MD2-3 modem has the correct line termination setting:

- For end point 1200 or 2400 bps: 600 ohms
- For end point 19,200 bps: 150 ohms
- For a tapping point: High resistance

Note

Please make sure that the S1 and S2 switches are set correctly in position 1 or 2 as shown in the following figures!

Attachment to a 2-wire end point

2-wire end point over an LTOP 1	2-wire end point over an LTOP2
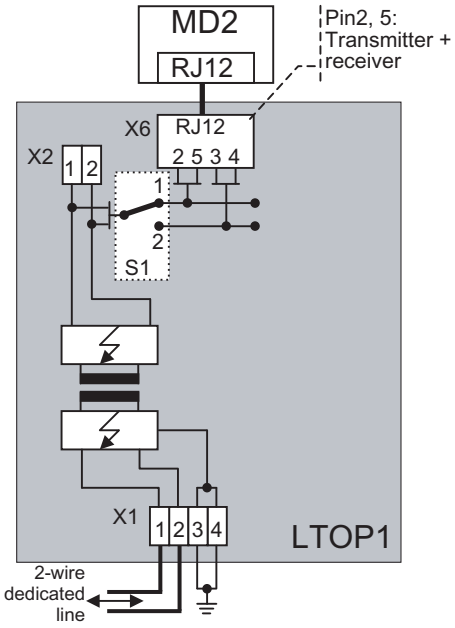	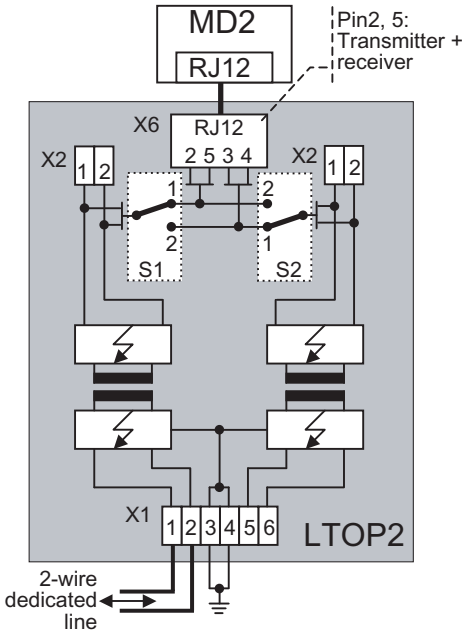

Attachment with a 4-wire end point or 2 x 2-wire end point

4-wire end point over an LTOP2	2 x 2-wire end point over an LTOP2
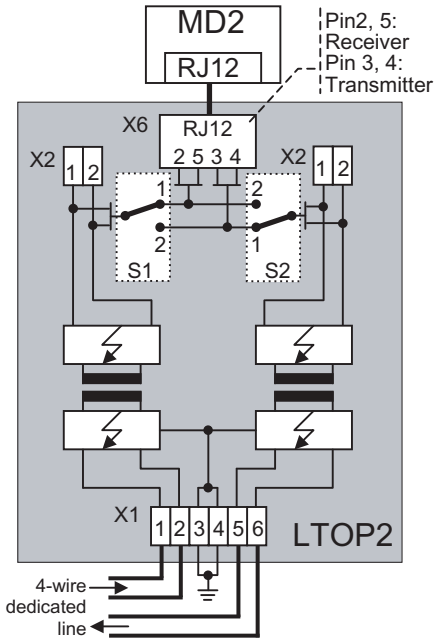	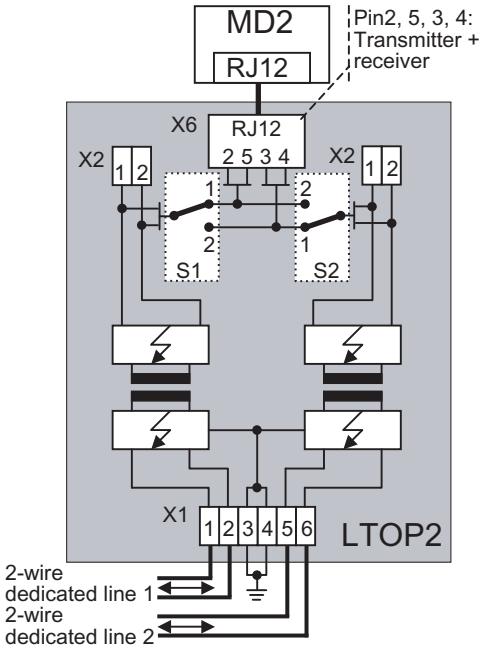

Attachment to a 2-wire tapping point

2-wire tapping point over an LTOP2

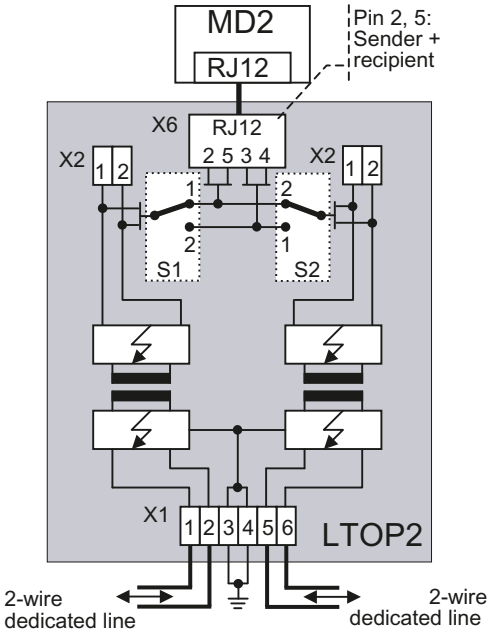

Attachment to a 4-wire tapping point

4-wire tapping point over two LTOP2

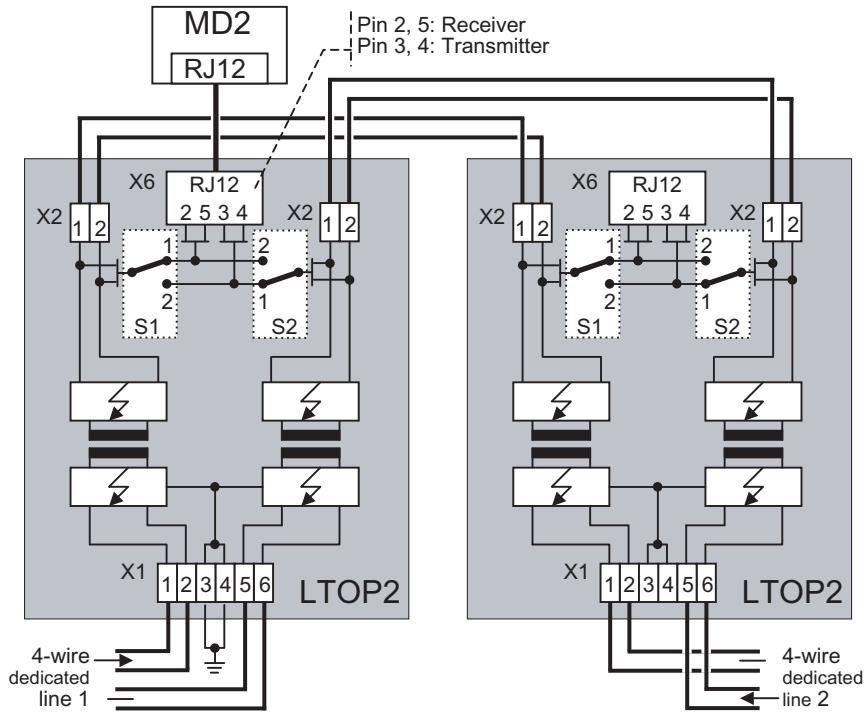

5.7 Analog dial-up modem MD3

This section describes the design of the MD3 modem, its connectors, display elements and switches.

5.7.1 Indicators and connectors accessible from the front

The following figure shows the front view of the MD3 modem with the front panels closed.

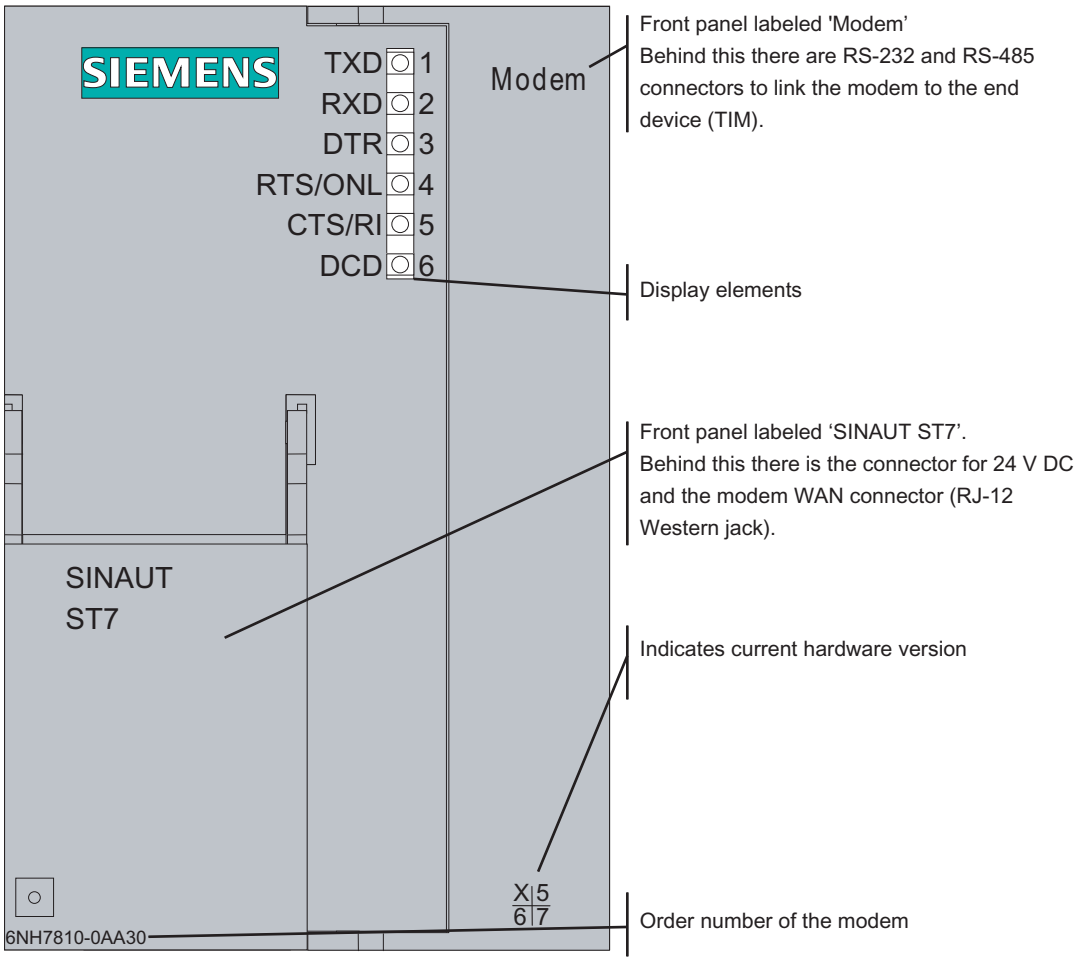

Figure 5-25 Front view of the MD3 modem with the front panels closed

LED displays of the MD3

The following table summarizes the meaning and activity of the six LEDs on the front of the modem for dial-up operation.

Table 5- 22 Meaning of the LEDs on the front of the MD3 for dial-up operation

LED no.	Labeling	Description
1	TXD	Transmit data The LED flashes in rhythm with the data flow sent to the modem by the terminal device (TIM) over the RS-232 or RS-485 interface.
2	RXD	Receive data The LED flashes in rhythm with the data flow sent by the modem to the terminal device (TIM) over the RS-232 or RS-485 interface. The data flow is indicated both in the data and in the command phase.
3	DTR	Data terminal ready Outgoing call: The LED lights up when the terminal device (TIM) wants to establish a connection and goes off as soon as the terminal device wants to terminate the established connection. If no connection can be established or the connection is terminated by the partner or is aborted due to a disruption, the terminal device deactivates the DTR signal as soon as it receives a message to this effect from the modem. Incoming call: The LED lights up when the terminal device (TIM) wants to accept an incoming call. The LED goes off again under the same conditions as with an outgoing call.
4	RTS / ONL	Modem online (ONL) "receiver taken off the hook" Outgoing call: The LED lights up as soon as the modem has received the dialing command from the terminal device (TIM) and begins connection establishment. The LED goes off again when the connection is terminated (by its own terminal device or by the partner) or when the connection is aborted due to a disruption. Incoming call: The LED lights up when the terminal device (TIM) signals with DTR that it wants to accept the incoming call. The LED goes off again under the same conditions as with an outgoing call.
5	CTS / RI	Ring indicator (RI) The LED lights up when there is an incoming call.
6	DCD	The LED has a dual function: 1. Operating status This signals the operating status of the modem. The LED lights up after the power is turned on if the operating voltage is correct. If the modem is not operational, the LED remains off. 2. Connection established During normal operation of the modem, the LED goes off as soon as the two participating modems are synchronized during connection establishment (reported to terminal device with CONNECT). The LED lights up again when the connection is terminated or aborted due to a disruption.

The RTS and CTS signal names are irrelevant for the MD3.

The following table summarizes the meaning and activity of the six LEDs on the front of the modem for dedicated line operation.

Table 5- 23 Meaning of the LEDs on the front of the MD3 for dedicated line operation

LED no.	Labeling	Description
1	TXD	Transmit data The LED flashes in rhythm with the data flow sent to the modem by the terminal device (TIM) over the RS-232 or RS-485 interface.
2	RXD	Receive data The LED flashes in rhythm with the data flow sent by the modem to the terminal device (TIM) over the RS-232 or RS-485 interface.
3	DTR	Data terminal ready This LED indicates the signal state of the DTR line of the data terminal equipment (TIM). Due to the default setting of the MD3, the signal state of the DTR line in the dedicated line mode has no effect on the modem.
4	RTS / ONL	Modem online (ONL) The modem attempts to establish a connection to the partner modem after power ON; in other words, the two modems attempt to synchronize themselves. As soon as they are synchronized, the ONL LED remains lit but the DCD LED goes off. If there is no synchronization within 60 seconds, the ONL LED goes off briefly and then lights up again to indicate that the modem is attempting to synchronize once again.
5	CTS / RI	-
6	DCD	The LED has a dual function: 1. Operating status This signals the operating status of the modem. The LED lights up after the power is turned on if the operating voltage is correct. If the modem is not operational, the LED remains off. 2. Connection established The LED goes off as soon as the two modems involved in connection establishment are synchronized (see also "ONL" LED). The LED lights up when the connection was aborted due to a disruption.

The RTS, CTS and RI signal names are irrelevant for the MD3.

Front view of the MD3 with removed front panels

The following figure once again shows the front view of the MD3 modem, here, however, the front panels have been removed to show the connectors located behind them.

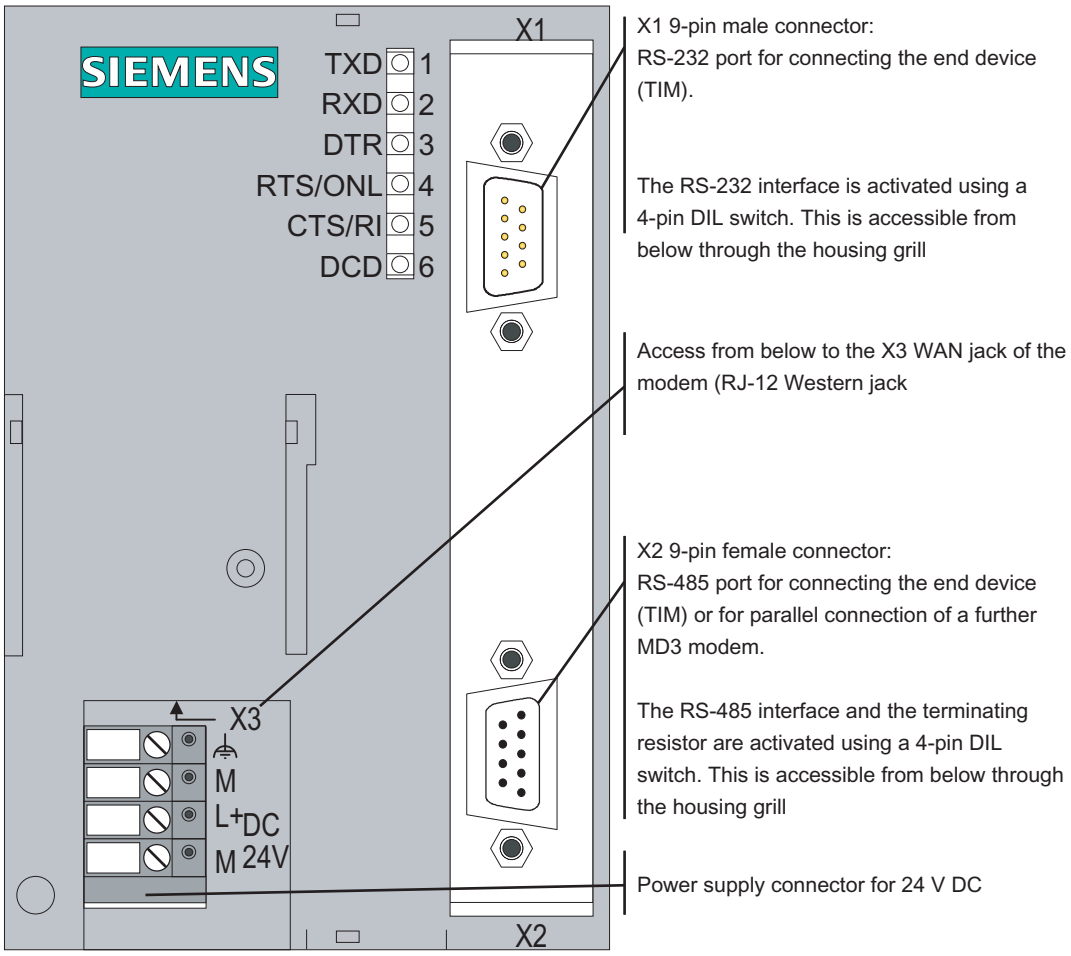

Figure 5-26 Front view of the MD3 modem with removed front panels

Pinout of the RS-232 and RS-485 ports

The X1 connector is designed as a 9-pin D-sub miniature male connector. The pinout is shown in the following table. As an RS-232 port, the pinout corresponds to that of a standardized PC connector.

The RS-232 interface can be activated using a 4-pin DIL switch accessible from below through the housing grill.

Table 5- 24 Pinout of the X1 RS-232 connector

Illustration	Pin no.	Signal name	Signal direction	Remark
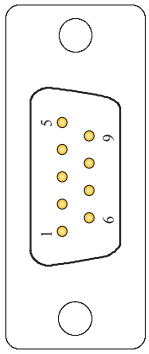	1	DCD	Output	
	2	RXD	Output	
	3	TXD	Input	
	4	DTR	Input	
	5	GND		
	6	DSR	Output	
	7	RTS	Input	
	8	CTS	Output	
	9	RI / T	Output	

The X2 RS-485 connector is designed as a 9-pin D-sub miniature female connector. The pinout is shown in the following table.

The RS-485 interface can be activated and the terminating resistor activated using a 4-pin DIL switch accessible from below through the housing grill.

Table 5- 25 Pinout of the X2 RS-485 connector

Illustration	Pin no.	Signal name	Signal direction	Remark
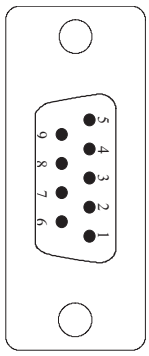	1			
	2			
	3	Data B	Bidirectional	
	4			
	5	M5	-	0 V for bus termination in connector*)
	6	P5	-	5 V for bus termination in connector*)
	7			
	8	Data A	Bidirectional	
	9			

*) It is advisable to activate the terminating resistor for the RS-485 bus in the connector and not in the modem itself.

Standard connecting cable for the RS-232 and RS-485 port

The TIM module or other terminal device with a suitable interface is connected to the X1 9-pin RS-232 connector or the 9-pin X2 RS-485 jack.

The following standard connecting cables are available for the X1 connector or X2 jack.

Table 5- 26 Standard connecting cable for the RS-232 and RS-485 port

Order no.	Description	Illustration
6NH7701-4AL	Connecting cable to connect the MD3 modem (RS-232) to a TIM (RS-232) or other DTE with a 9-pin RS-232 interface with an identical pin assignment. Cable length 1.5 m	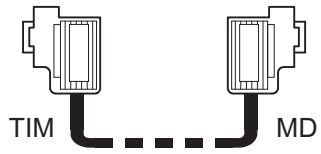
6NH7701-4DL	Connecting cable to connect the MD3 modem (RS-485) to a TIM 4 or TIM 4R-IE (RS-485) or other DTE with a 9-pin RS-485 interface with an identical pin assignment. Cable length 1.5 m	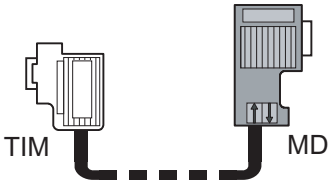

Note

The standard connecting cable 6NH7701-4AL for connecting the modem to a TIM module (RS-232) is connected to the modem "head first" so that the cable comes away towards the top.

With a TIM 4, the standard connecting cable is also connected from above. With the TIM 3V-IE variants and the TIM 4R-IE, the cable is connected from below.

The following figures show how the connecting cables listed above are assembled.

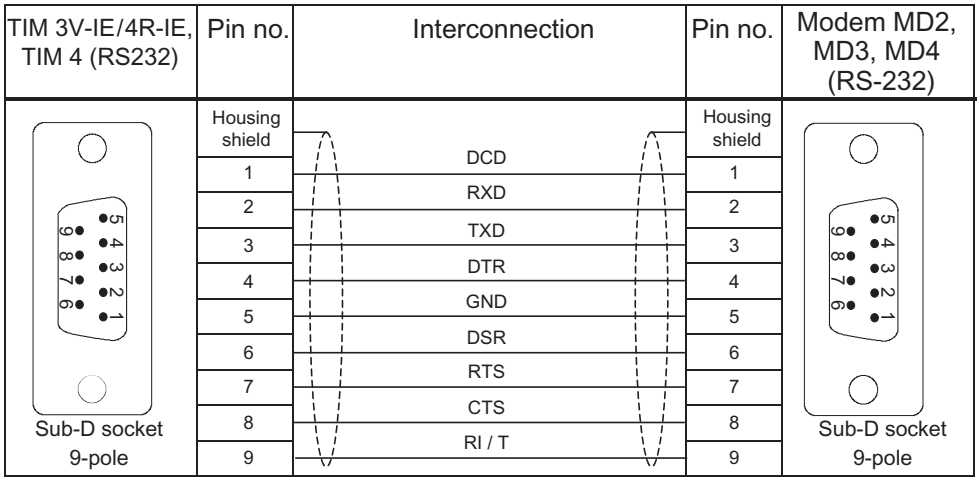

Figure 5-27 Assembly of the standard connecting cable 6NH7701-4AL

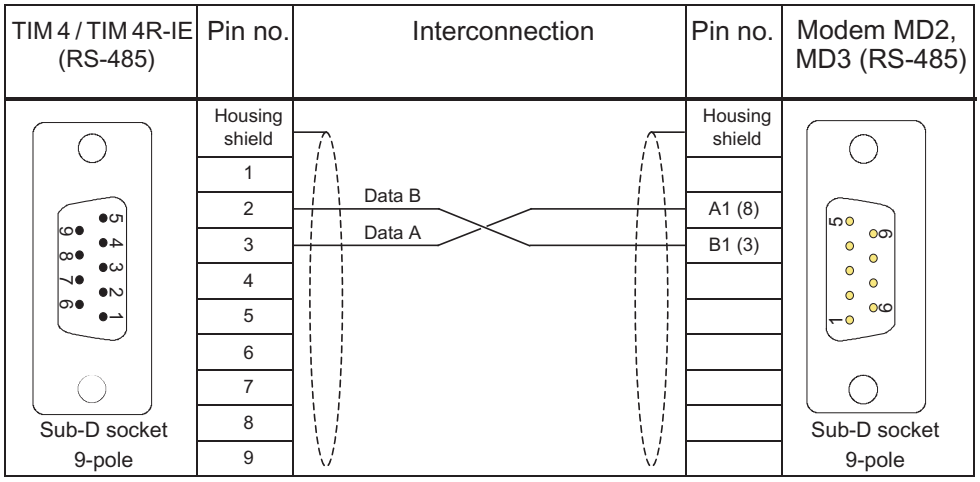

Figure 5-28 Assembly of the standard connecting cable 6NH7701-4DL

You will find an example of connecting the MD3 modem to a TIM and to a telephone outlet below in the section *Connecting the MD3 to a TIM and telephone outlet*.

5.7.2 Configuration switches accessible from above

The following figure shows the MD3 modem from above. It indicates the location of the SW1 (4-pin) and SW2 (10-pin) DIL switches that are accessible from above.

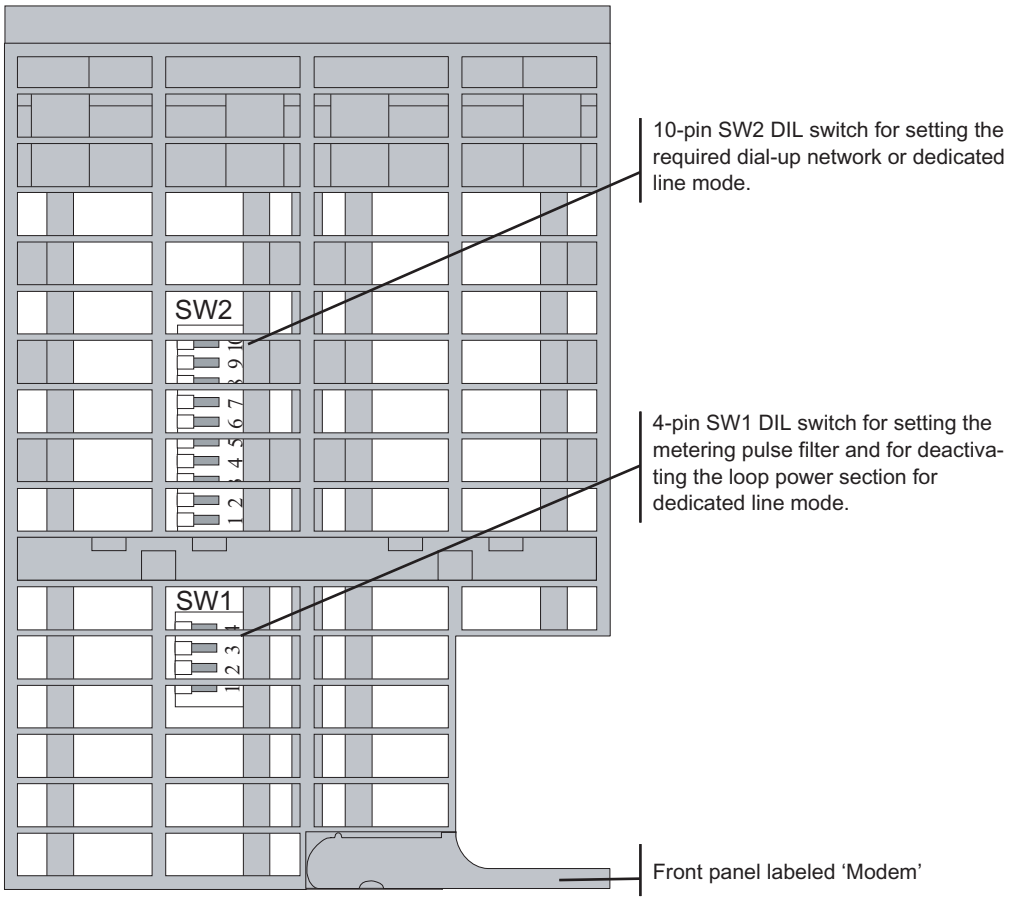

Figure 5-29 View of the MD3 modem from above

Settings with the DIL switches accessible from above

The MD3 modem has a 4-pin and a 10-pin DIL switch. The 10-pin DIL switch, SW2 is located directly on the top housing grill. The 4-pin DIL switch, SW1, can also be reached from above through the housing grill, however it is located deeper within the housing and may therefore be more difficult recognize. To set this switch, you require a long, thin tool, for example a small screwdriver or a toothpick.

The DIL switches have the following functions:

- 4-pin DIL switch SW1
  - Metering pulse filter
    at 12 kHz or at 16 kHz
  - Activating or deactivating the loop power section
- 10-pin DIL switch SW2
  - Setting one of the 16 standard profiles
  - Data format 11 bits or 10 bits
  - Tone or pulse dialing
  - Modem type A (originate) or B (answer) for dedicated line operation
  - Reset function
  - Loudspeaker ON or OFF
  - Line adjustment with 600 ohms or Zr (frequency-dependent)

The following figure summarizes the possible settings.

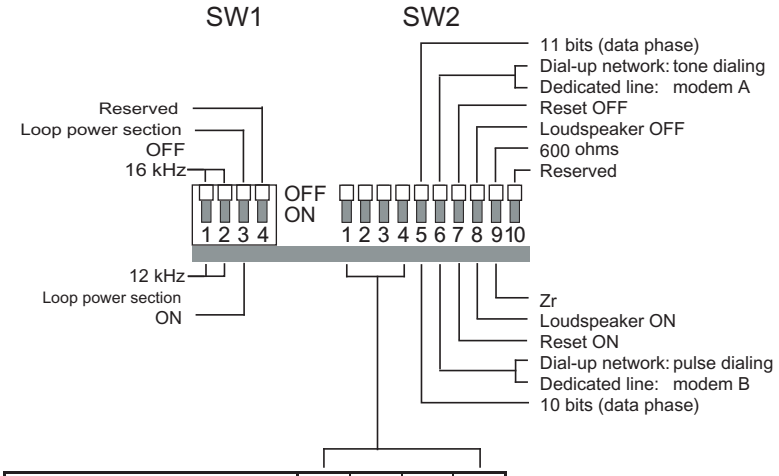

Standard profile for dial-up network		1	2	3	4
0	AT mode	OFF	OFF	OFF	OFF
1	V.25bis, 1200 bps V.22	OFF	ON	OFF	OFF
2	V.25bis, 2400 bps V.22bis	OFF	OFF	ON	OFF
3	V.25bis, 4800 bps V.32bis	OFF	ON	ON	OFF
4	V.25bis, 9600 bps V.32bis	OFF	OFF	OFF	ON
5	V.25bis, 19200 bps V.34bis	OFF	ON	OFF	ON
6	V.25bis, 33600 bps V.34bis	OFF	OFF	ON	ON
7	AT mode, freely setable	OFF	ON	ON	ON

Standard profile for dedicated line		1	2	3	4
8	300 bps (direct)	ON	OFF	OFF	OFF
9	1200 bps (direct)	ON	ON	OFF	OFF
10	2400 bps (direct)	ON	OFF	ON	OFF
11	9600 bps (direct)	ON	ON	ON	OFF
12	19200 bps (direct)	ON	OFF	OFF	ON
13	19200 bps (buffered)	ON	ON	OFF	ON
14	33600 bps (buffered)	ON	OFF	ON	ON
15	AT mode, freely settable	ON	ON	ON	ON

Figure 5-30 Possible settings with the DIL switches accessible from above

Note

Reserved DIL switches must always be set to the OFF position. See also DIL switch setting as shipped.

Setting the metering pulse filter

The metering pulse filter can be set

- to 12 kHz or
- to 16 kHz

Table 5- 27 Setting the metering pulse filter

Metering pulse filter	Setting on DIL switch
16 kHz (for example for Germany or Switzerland)	SW1 
12 kHz (for example for Austria)	SW1 

When operating the MD3 as a dedicated line modem, the setting for the metering pulse filter is irrelevant.

Setting the loop power section

For dial-up operation, the loop power section must always be activated. For dedicated line operation, the loop power section is deactivated.

Table 5- 28 Setting the loop power section

Loop power section	Setting on DIL switch
Turned off (default for dedicated line operation)	SW1 
Turned on (default for dial-up operation)	SW1 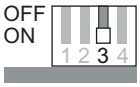

Basic settings for dialing mode

Certain basic settings must be made for the dialing mode. The settings relate to the data format, the dialing procedure, and line adjustment. You make the basic settings with the DIL switches SW2.1, SW2.5, SW2.6 and SW2.9.

The procedure is as follows:

Turn of the power supply and set the four switches mentioned above to the required position. When you turn on the power supply, the modem then adopts the selected basic setting.

Table 5- 29 Basic setting for dialing mode

Meaning	Setting on DIL switch
Data format 11 bits (required, for example, for FT 1.2 format)	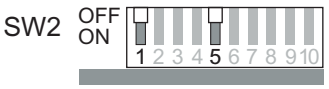
Data format 10 bits (required, for example, for FT 2 format)	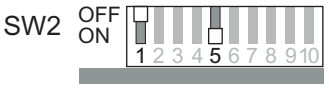
Tone dialing	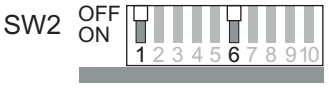
Pulse dialing	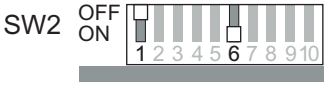
Line adjustment 600 ohms [1)]	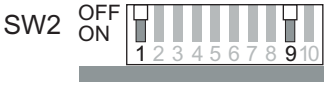
Line adjustment Zr [1)]	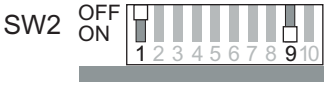

1) When shipped, the line adjustment is set to Zr, because the MD3 is normally connected to a digital telephone exchange. If an older analog telephone exchange is used, change the line adjustment to 600 ohms if you encounter transmission problems.

Settings for a standard dialing profile

Apart from the default setting for the dial-up mode, switches SW2.2, SW2.3 and SW2.4 can be used to select one of the 8 standard dialing profiles. Standard dialing profiles 0 to 6 are default settings that enable the MD3 modem to be operated without any programming using a terminal program if one of these profiles matches the intended application. Standard dialing profile 7 can be freely configured by the user and therefore requires programming by a terminal program before it can be put into operation (for details see section *User-configurable profiles*).

The procedure is as follows:

Turn of the power supply and set the four switches SW2.1 to SW2.4 to the required position. When you turn on the power supply, the modem then adopts the selected standard dialing profile.

The following table lists the properties of the individual dialing profiles and how to set them using the switches mentioned above.

Table 5- 30 Setting standard dialing profiles

Profile no.	Meaning	Setting on DIL switch
0	AT mode	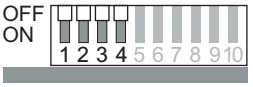
1	V.25bis 1200 bps duplex, V.22	
2	V.25bis 2400 bps duplex, V.22bis	
3	V.25bis 4800 bps duplex, V.32bis	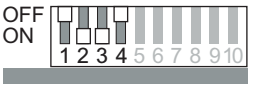
4	V.25bis 9600 bps duplex, V.32bis	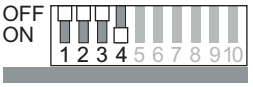
5	V.25bis 19200 bps duplex, V.34bis	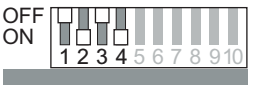
6	V.25bis 33600 bps duplex, V.34bis	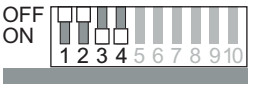
7	AT mode Freely configurable	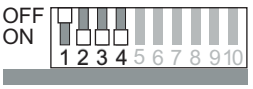

Basic settings for dedicated line mode

Certain basic settings must be made for the dedicated line mode. The settings relate to the data format, the modem type, and line adjustment. You make the basic settings with the DIL switches SW2.1, SW2.5, SW2.6 and SW2.9.

The procedure is as follows:

Turn of the power supply and set the four switches mentioned above to the required position. When you turn on the power supply, the modem then adopts the selected basic setting.

Table 5- 31 Basic setting for dedicated line mode

Meaning	Setting on DIL switch
Data format 11 bits (8E1)	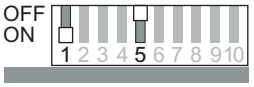
Data format 10 bits (8N1)	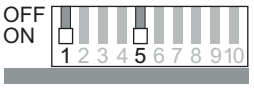
Modem A (originate) 2)	
Modem B (answer) 2)	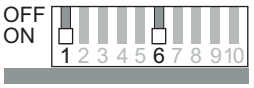
Line adjustment 600 ohms 1)	
Line adjustment Zr 1)	

1) The factory setting for the line adjustment is Zr because this normally adapts MD3 optimally to the dedicated line and the frequencies used. Line adjustment with 600 ohms is not normally necessary. It is, however, important that the two modems connected to each other over the dedicated line are set to the same line adjustment.

2) Refer to the explanations in the section Modem A and modem B for dedicated line mode.

Note

A further important basic setting for dedicated line mode is deactivating the loop power section.

Modem A and modem B for dedicated line mode

When setting up a point-to-point link, remember that the two MD3 modems being used for the connection must have different parameter settings. To simplify matters, the modems with the difference settings are referred to as "modem A" and "modem B". "Modem A" (originate) is the modem in the role of active modem that attempts to establish the connection to the partner over the dedicated line. Modem B (answer) is the passive answering modem during connection establishment.

During connection establishment, the modems synchronize themselves to establish a duplex connection for data transmission.

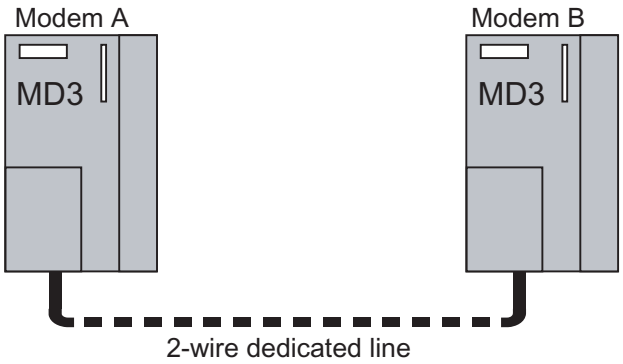

Figure 5-31 Point-to-point link between two MD3 modems over a 2-wire dedicated line

Settings for a standard dedicated line profile

Apart from the default setting for the dedicated line mode, switches SW2.2, SW2.3 and SW2.4 can be used to select one of the 8 dedicated line profiles. Standard dedicated line profiles 8 to 14 are default settings that enable the MD3 modem to be operated without any programming using a terminal program if one of these dedicated line profiles matches the intended application. Standard dedicated line profile 15 can be freely configured by the user and therefore requires programming by a terminal program before it can be put into operation.

The procedure is as follows:

Turn of the power supply and set the four switches SW2.1 to SW2.4 to the required position. When you turn on the power supply, the modem then adopts the selected standard dedicated line profile.

The following table lists the properties of the individual dedicated line profiles and how to set them using the switches mentioned above.

Table 5- 32 Setting standard dedicated line profiles

Profile no.	Meaning	Setting on DIL switch
8	300 bps (direct) (suitable only for RS-232 port)	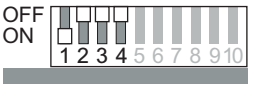
9	1200 bps (direct) (suitable only for RS-232 port)	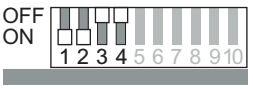

Profile no.	Meaning	Setting on DIL switch
10	2400 bps (direct) (suitable only for RS-232 port)	
11	9600 bps (direct) (suitable only for RS-232 port)	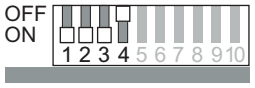
12	19200 bps (direct) (suitable only for RS-232 port)	
13	19200 bps (buffered) (suitable only for RS-232 port)	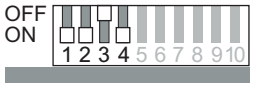
14	33600 bps (buffered) (suitable only for RS-232 port)	
15	AT mode Freely configurable (also suitable for RS-485 port)	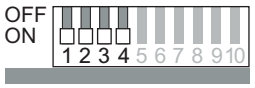

Note

The selection of the standard dedicated line profile not only depends on the required transmission speed but also on the interface to be used, the RS-232 or the RS-485 interface. Standard dedicated line profiles 8 to 14 are only suitable for use with the RS-232 interface. If you require the RS-485 interface, the user-configurable dedicated line profile 15 must be set and configured. Profile 15 can, however, also be used with the RS-232 interface.

Loudspeaker ON or OFF

The MD3 modem is equipped with a loudspeaker. The loudspeaker allows you to hear all the signal tones during the connection phase and during data transmission. The loudspeaker can be turned on for test purposes or for normal operation.

Table 5- 33 Setting the loudspeaker

Loudspeaker	Setting on DIL switch
Turned off	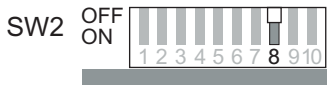
Turned on	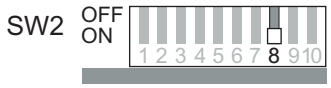

Modem reset

If the configuration of the modem is unclear, you can reset to the factory default settings. When you reset the modem, all 16 standard profiles are reset to the default setting.

Procedure:

1. Power supply OFF
2. Set switch SW2.7 to ON
3. Turn the power supply ON and then wait at least 10 seconds until the DCD LED lights up.
4. Power supply OFF, set switch SW2.7 to OFF
5. Select the basic setting and standard profile and turn the power supply ON

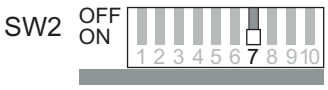

Figure 5-32 Setting the DIL switch for a modem reset

Default settings of the DIL switches SW1 and SW2

When it ships, the modem has the following default settings:

- Metering pulse filter 16 kHz
- Loop power section activated
- Standard dialing profile 0: AT mode
- Data format 11 bits (8E1)
- Tone dialing
- Loudspeaker OFF
- Line adjustment Zr

When shipped, the switches are set as shown in the following figure.

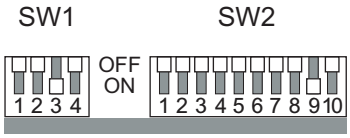

Figure 5-33 Default settings of the DIL switches SW1 and SW2

5.7.3 Connectors and configuration switches accessible from below

The following figure shows the MD3 modem from below with the X3 RJ-12 Western jack and the DIL switch for activating the RS-232 or RS-485 interface

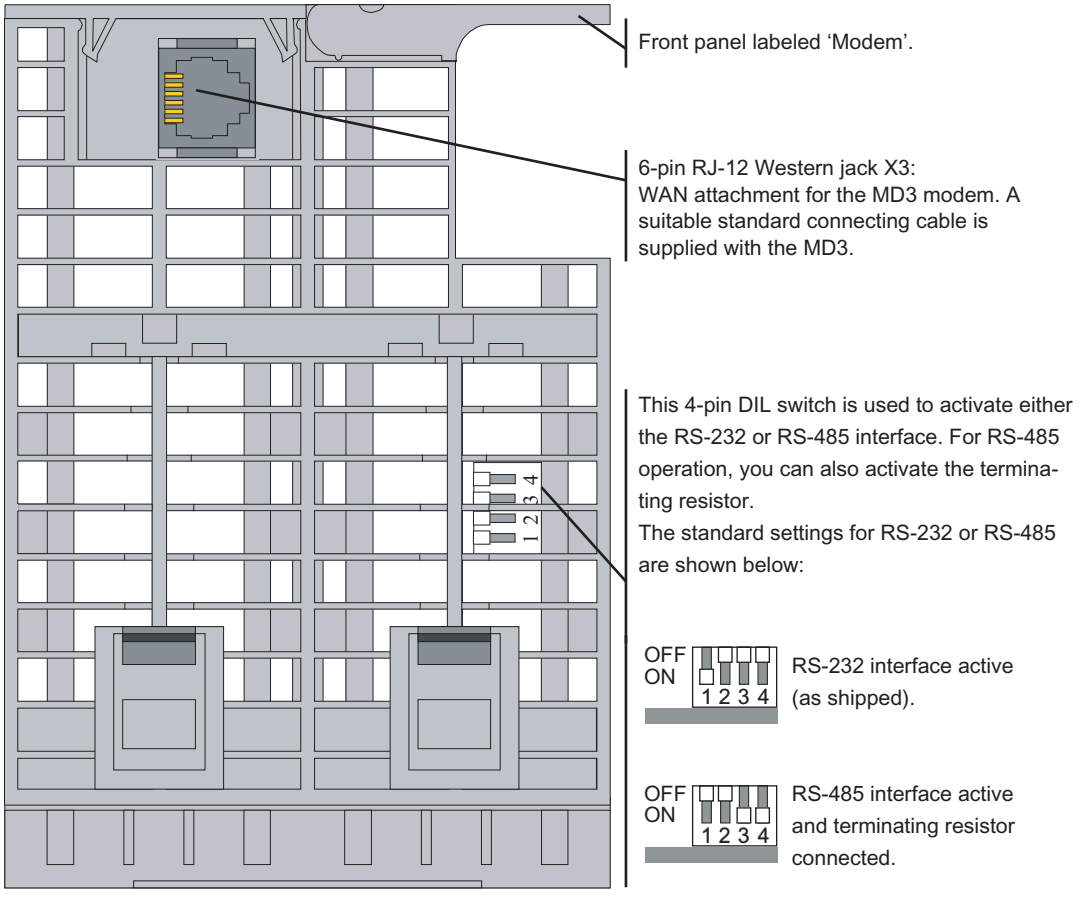

Figure 5-34 View of the MD3 modem from below

Settings with the DIL switches accessible from below

A further 4-pin DIL switch on the bottom of the modem housing is accessible from below. This DIL switch is used to activate either the RS-232 or RS-485 interface. For RS-485 operation, you can also activate the terminating resistor. The following figure shows the possible settings in general.

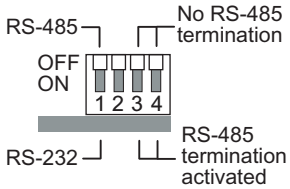

Figure 5-35 Configuration switches on the 4-pin DIL switch accessible from below

Pinout of the X3 RJ-12 jack

The X3 connector of the MD3 modem is designed as a 6-pin RJ-12 Western jack. The pinout is shown in the following table.

Table 5- 34 Pinout of the X3 RJ-12 jack for the MD3 modem

Illustration	Pin no.	Signal name	Signal direction	Remark
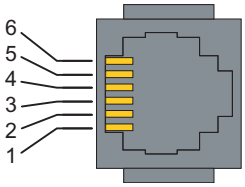	1	E		Ground
	2	a2	Bidirectional	Outgoing wire pair (along with b2)
	3	b1	Bidirectional	Incoming wire pair
	4	a1		
	5	b2	Bidirectional	Outgoing wire pair (along with a2)
	6	G	-	Metering pulse

Standard connecting cable for the RJ-12 port

The connecting cable 6NH7700-3BR60 ships with every MD3 modem. It allows the modem to be connected to a TAE6 telephone outlet for dial-up mode or with an LTOP voltage protection module for dedicated line mode.

The connecting cable can also be ordered as a spare under the number shown.

Table 5- 35 Standard connecting cable for the RJ-12 port of the MD3 modem

Order no.	Description	Illustration
6NH7700-3BR60	Connecting cable with 2 x RJ-12 Western plug and snap-on TAE6N plug to connect an MD3 modem (RJ-12) to a telephone jack (TAE6N) or an LTOP overvoltage protection module (RJ-12) in dedicated line mode. Cable length 6 m	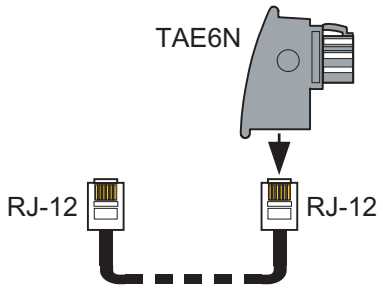

Note

The 6NH7700-3BR60 connecting cable has a ferrite at one of the cable ends to suppress electromagnetic interference over the connecting cable. You should not normally remove the ferrite. Make sure that the RJ-12 Western connector at the end of the cable with the ferrite is connected to the modem.

The following table shows the pinout of the RJ-12 Western plug at the modem end of the standard connecting cable described above and the fitted TAE6N connector.

Table 5- 36 Pinout of the RJ-12 and TAE6 connectors

RJ-12 Western plug		Signal name	TAE6 plug	
Illustration	Pin no.		Pin no.	Illustration
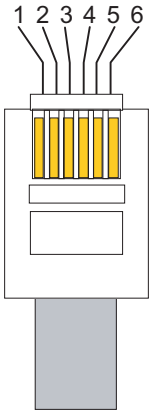	4	a1	1	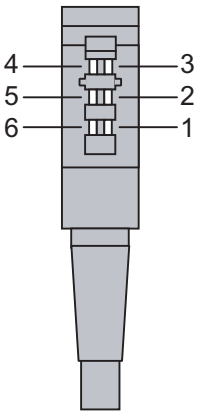
	3	b1	2	
	6	G	3	
	1	E	4	
	5	b2	5	
	2	a2	6	

Standard cable for dial-up mode

For dial-up mode, cable 6NH7700-3BR60 is used to connect the MD3 modem to a TAE6 telephone outlet. The TAE6N plug is then clipped onto one of the RJ-12 Western plugs of the cable.

Note

When the MD3 modem is used outside Germany, a telephone plug adapter for the specific country can be clipped onto the RJ-12 Western plug. Some countries already use RJ-12 jacks in their telephone outlets which means that the 6NH7700-3BR60 cable can be connected directly without the need for an adapter.

Standard cable for dedicated line mode

For dedicated line mode, cable 6NH7700-3BR60 is used to connect the MD3 modem to an LTOP overvoltage protection module. In this case, the connecting cable is used without the TAE6N connector.

The actual connection of the dedicated cable is on the LTOP overvoltage protection module using screw terminals.

Note

To insert the cable in the X3 RJ-12 jack of the modem, it is best to hold the cable directly below the RJ-12 plug. This makes it easier to insert the plug than if you hold the RJ-12 plug itself. When inserting it, make sure that you can hear the RJ-12 connector click into place!

5.7.4 Connecting the MD3 with a TIM and TAE6 outlet

The following figure summarizes how the MD3 modem is connected to a TIM (over RS-232) and with the telephone outlet (TAE6N jack) in dialing mode using the specified standard connecting cables. A telephone can also be connected to the same telephone outlet as the modem (using the TAE6F jack).

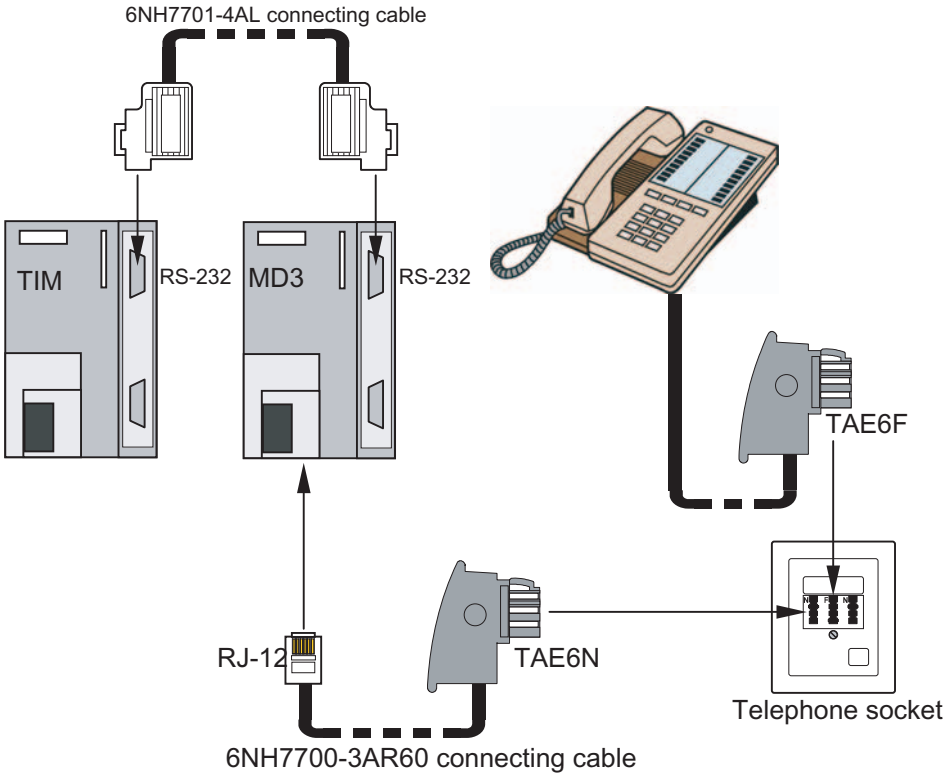

Figure 5-36 Connecting the MD3 with a TIM and telephone outlet

Note

Any TIM with an RS-232 port can be used, in other words, the TIM 3V-IE variants, the TIM 4R-IE and all TIM 4 types.

Connecting an MD3 and a telephone in parallel to a TAE6 outlet

The following figure shows how to connect an MD3 and a telephone in parallel to a TAE6 outlet. The diagram shows the standard wiring of the TAE6 socket of the German Telekom with a connection for one telephone (TAE6F) and a connection for a modem or a fax machine (TAE6N).

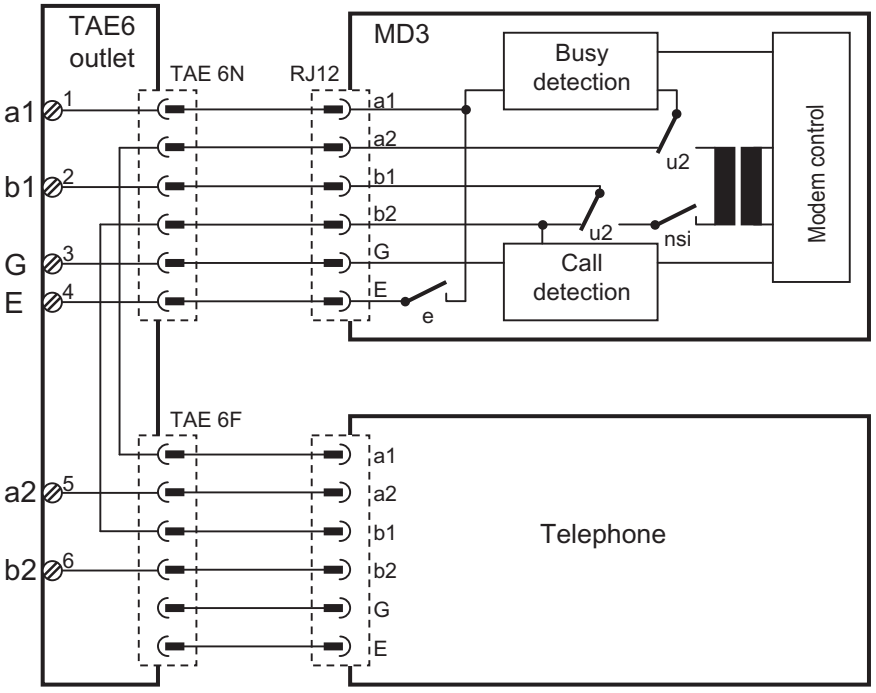

Figure 5-37 Connecting an MD3 and a telephone in parallel to a TAE6 outlet

5.7.5 Connecting the MD3 with TIM, LTOP and dedicated line

Introduction

The following figures illustrate the various options for connecting the MD3 modem to a TIM (over RS-232) or other MD3 modems (over RS-485) in dedicated line mode as well as to a dedicated line over an LTOP.

For more detailed information on connecting, wiring up and setting the LTOP, refer to the section Line transformer with LTOP overvoltage protection.

Connecting an MD3 with a TIM over the RS-232 port

Only one (1) MD3 modem can be connected to a TIM over the RS-232 port. This results in the following configuration:

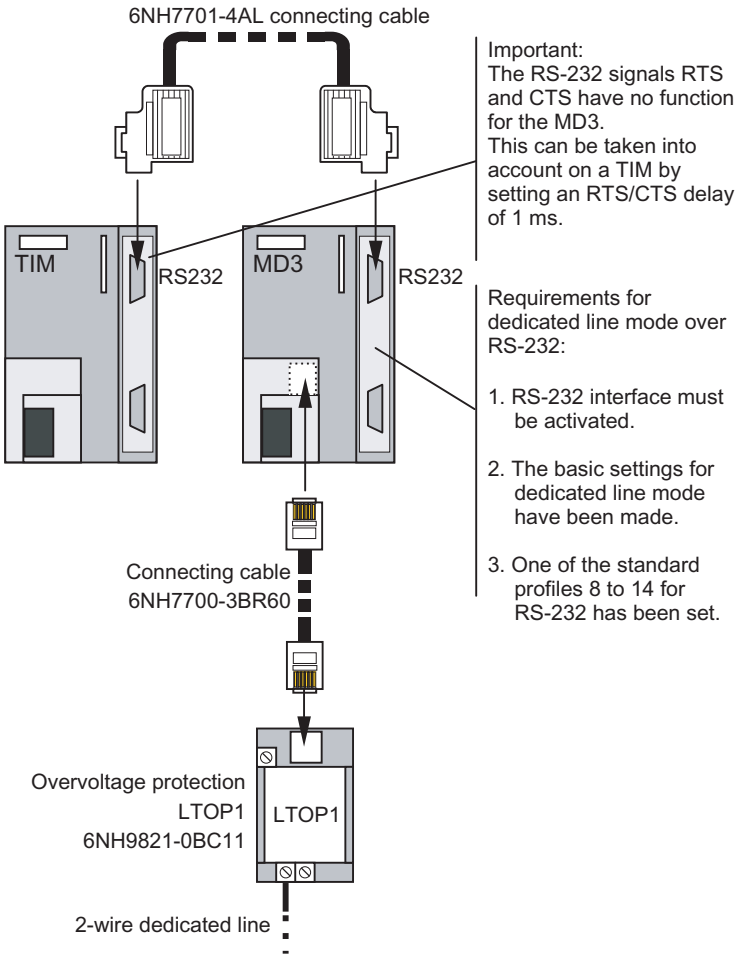

Figure 5-38 Connecting an MD3 to a TIM over RS-232, 2-wire end point variant

Please follow the instructions in the figure above to ensure problem-free operation,

Note

Any TIM with an RS-232 port can be used, in other words, the TIM 3V-IE variants, the TIM 4R-IE and all TIM 4 types.

Connecting several MD3s with a TIM over the RS-485 port

Several MD3 modems can be connected to a TIM over the RS-485 port. This type of configuration is necessary when several dedicated lines come together on one TIM; in other words when connecting a star network. The following figure shows this configuration with standard components.

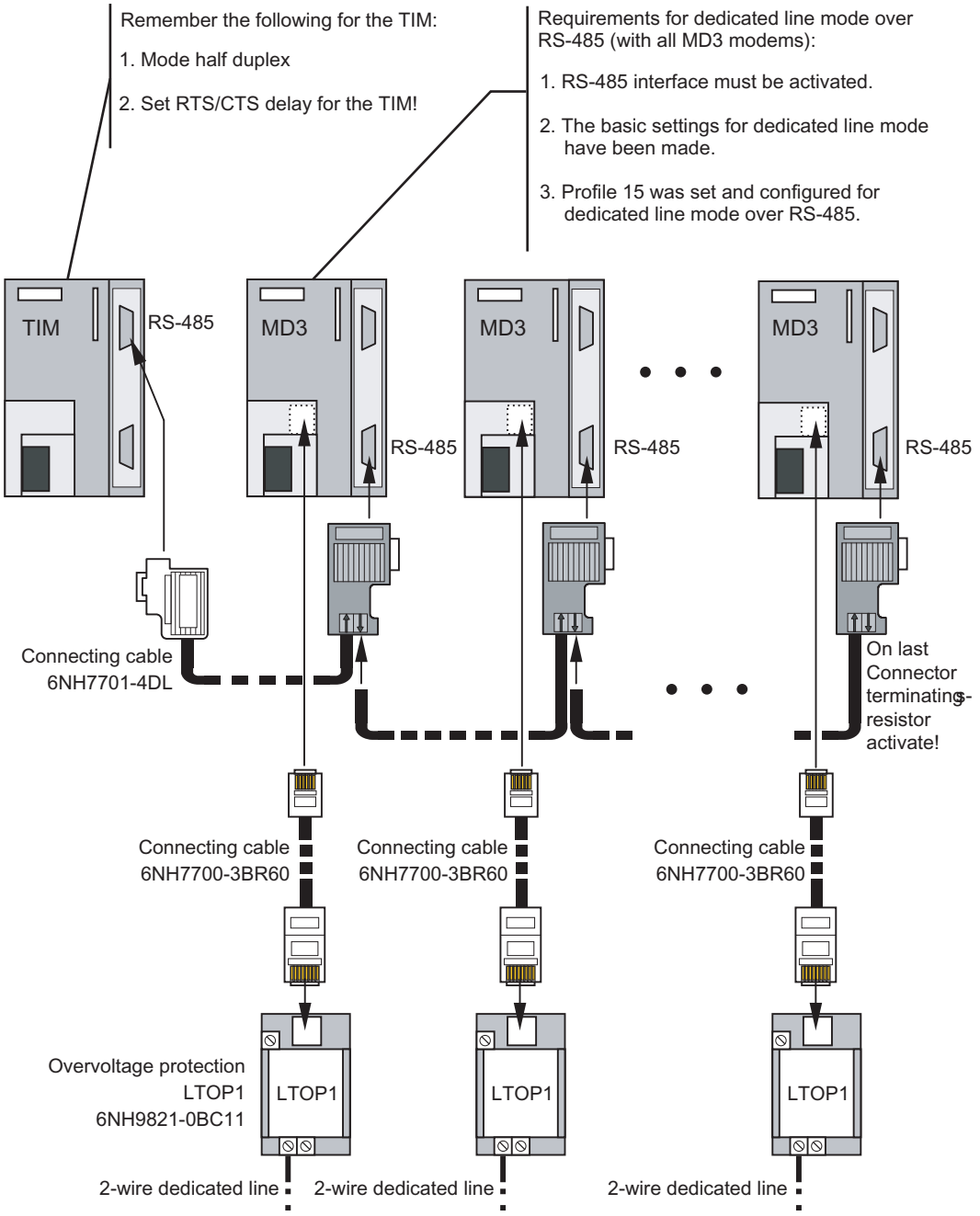

Figure 5-39 Connecting several MD3s to one TIM over RS-485, star-shaped convergence of several dedicated lines

For the connection from the TIM to the first MD3, the 6NH7701-4DL standard connecting cable is used. For the connection to the other modems, there is no preassembled connecting cable available. These can, nevertheless, be implemented with the standard components from the SIMATIC S7 range. The same parts can be used as when creating an MPI connection. As cable, we recommend 6XV1830-0AH10, and as connector 6ES7972-0BA11-0XA0. When necessary, the RS-485 terminating resistor can be activated in this connector.

Note

Any TIM with an RS-232 port can be used, in other words, the TIM 3V-IE variants, the TIM 4R-IE and all TIM 4 types.

Note

Do not forget to activate the terminating resistor for the RS-485 bus on the last connector using the slider switch.

RS-485 operation of the MD3

If several MD3s are connected in parallel over the RS-485 port, remember the following when making the settings for the modem and setting the parameters for the TIM:

1. The MD3 modem must be set to profile 15 using the 10-pin DIL switch.
2. Make sure that this user-configurable profile 15 is set so that it is suitable for RS-485 mode using a PC and terminal program.
3. The RS-485 interface must also be activated at the 4-pin DIL switch accessible from below.
4. The RS-485 interface of the TIM connected to the MD3 modem must also be activated at the 8-pin DIL switch accessible from above (applies to all TIM 4 types).
5. Since data traffic can only handled in half duplex over RS-485, the mode of the connected TIM must be set to half duplex.
6. Once the MD3 has received data and forwarded it to the TIM, the MD3 requires a pause of several ms before it is ready to send data. The TIM must take this pause into account by setting an RTS/CTS delay; in other words, after receiving data it must only start transmitting data after the RTS/CTS delay has expired. The duration of the delay depends on the transmission speed being used on the dedicated line (see table below).

Table 5- 37 RTS/CTS delay for MD3 in RS-485 mode

Speed on the dedicated line	RTS/CTS delay	Speed on the dedicated line	RTS/CTS delay
300 bps	100 ms	14400 bps	10 ms
1200 bps	100 ms	19200 bps	10 ms
2400 bps	50 ms	26400 bps	10 ms
9600 bps	25 ms	33600 bps	10 ms

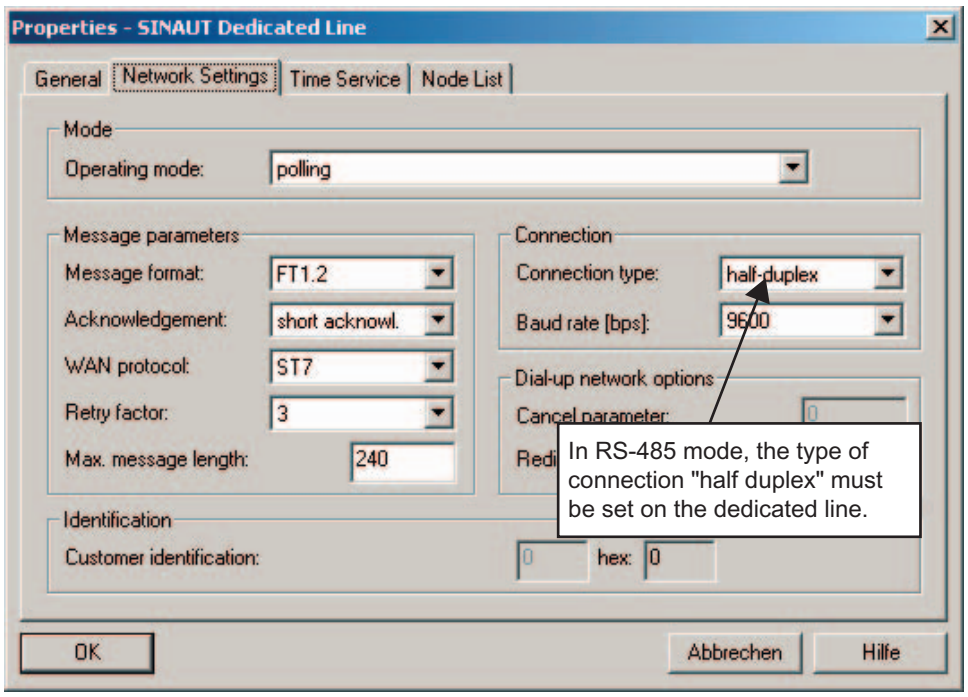

Figure 5-40 Setting parameters for "half duplex" mode in the properties dialog of the SINAUT dedicated line, "Network Settings" tab

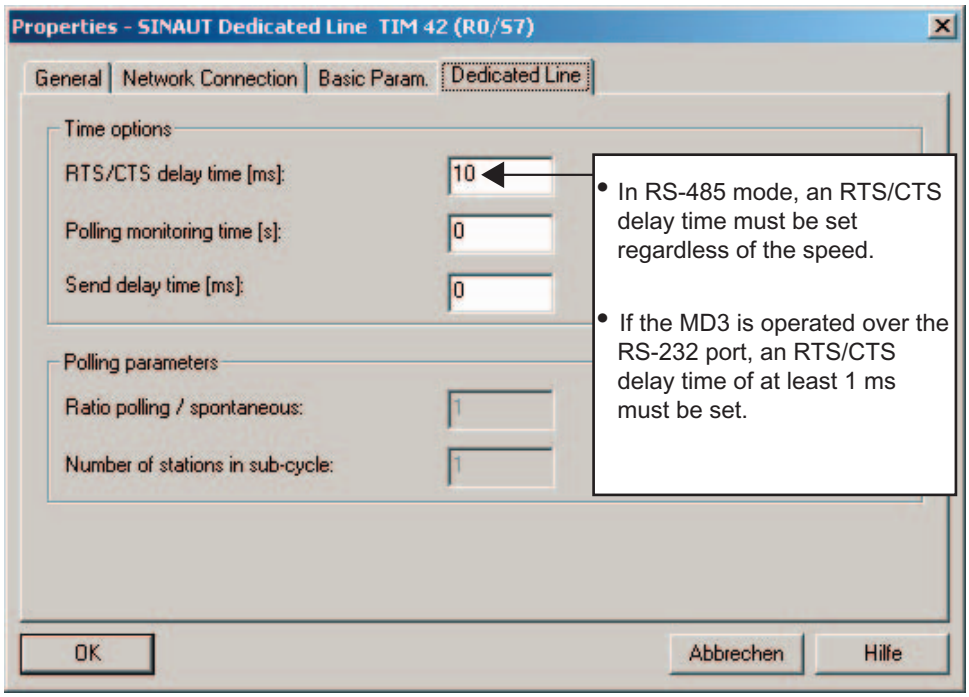

Figure 5-41 Setting the RTS/CTS delay time in the properties dialog for TIM WAN access, "Dedicated Line" tab.

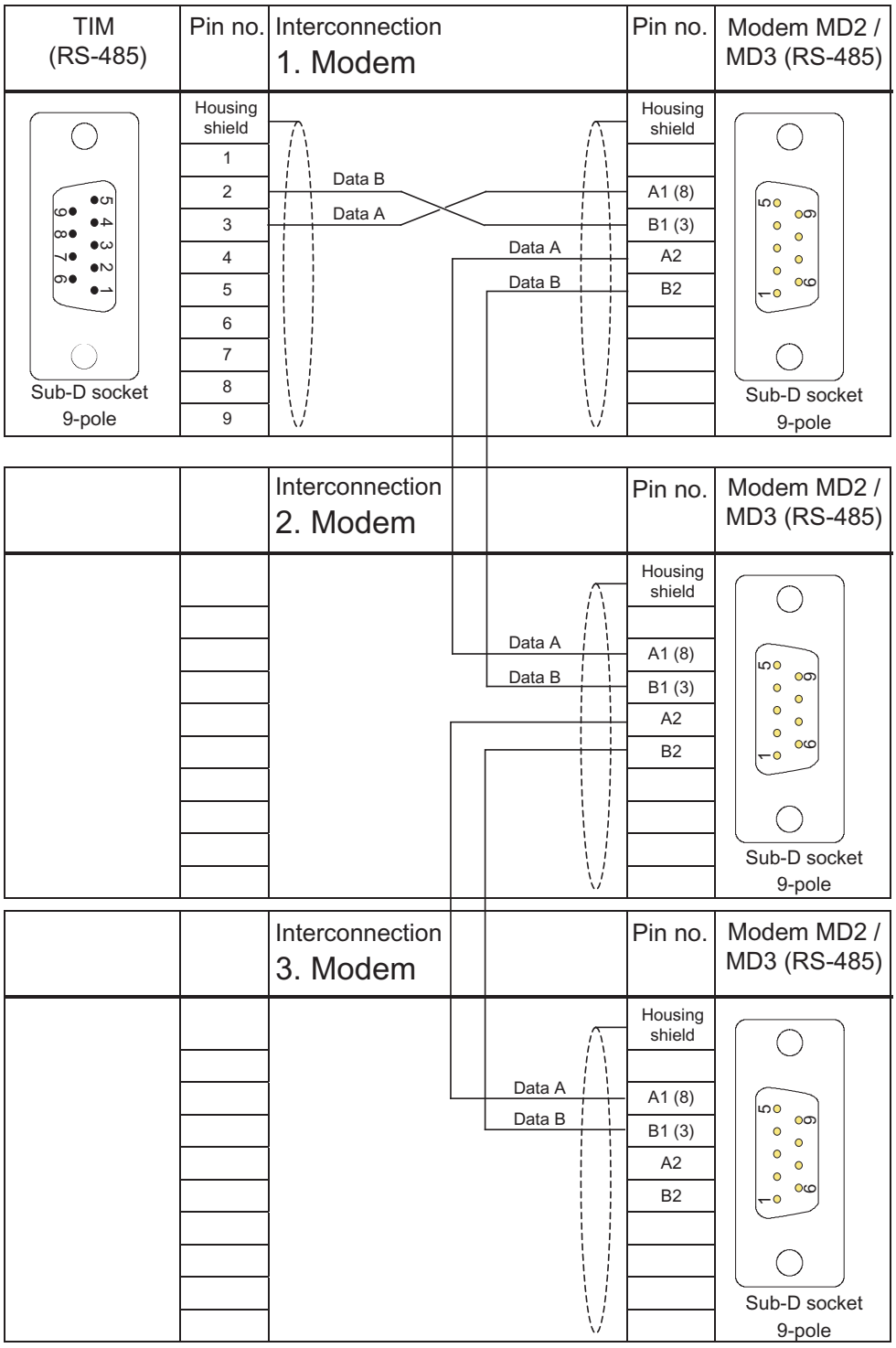

Figure 5-42 Assembly of the standard connecting cable 6NH7701-4DL from the TIM to the MD3 modems

Attenuation values of the MD3 modem in dedicated line mode

Table 5- 38 Attenuation values of the MD3 modem in dedicated line mode

Transmission speed (bps)	Attenuation per km (dB)	Attenuation per LTOP (dB)
With line termination with Z = Zr		
300 to 33600	1,0	0,4

Maximum range of the MD3 modem in dedicated line mode

Transmission speed (bps)	Maximum range (km)			
	Transmit level –15 dB		Transmit level -10 dB	
	With LTOP	Without LTOP	With LTOP	Without LTOP
With line termination with Z = Zr				
300	29	30	34	35
1200 to 19200	23	24	28	29
33600	14	15	19	20

The values in the table are guidelines for communication lines without loading coils of the type 2 x 2 x 0,8 J-Y(St)Y.

When calculating the maximum range, a power margin of 4 dB was included. This is to compensate for fluctuations in cable properties that experience has shown to occur in practise, and thus always ensure that sufficient signal level is available for problem-free data transmission.

5.7.6 User-configurable profiles

Introduction

Apart from the seven standard profiles for dialing mode (profile 0 to 6) and dedicated line mode (profile 8 to 14), the MD3 modem provides a further user-configurable profile for each mode. Profile 7 is available as a user-configurable profile for dialing mode, profile 15 for dedicated line mode.

Both profiles are configured at a PC using AT commands. The PC and modem are connected together using a cable. On the PC, the connecting cable is attached to COM1 or COM2, on the modem over the RS-232 port.

The AT commands are transferred using a terminal program. One suitable program is HyperTerminal from WINDOWS.

Connecting the PC and modem

To transfer the AT commands, the PC and modem are connected using the SINAUT ST7 standard cable 6NH7701-4AL. If the standard cable is not available, a connecting cable with two 9-pin D-sub female connectors and the following pinout can be used.

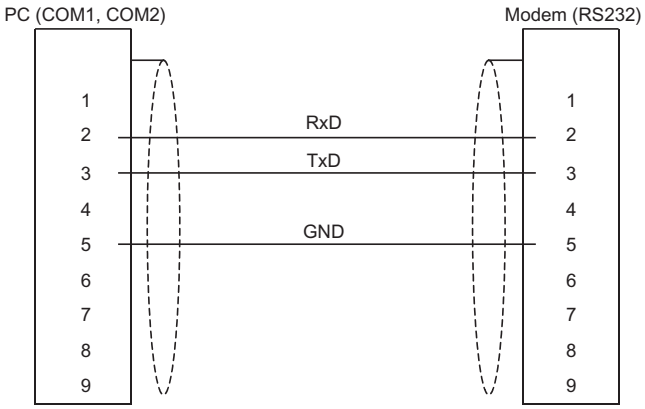

Figure 5-43 Wiring diagram of a PC-modem cable

User-configurable profile 7 for dialing mode

If none of the standard profiles 0 to 6 is suitable for the required application, profile 7 can be configured by the user and stored in non-volatile memory. As default, the configurations of profiles 7 and 0 are identical.

When configuring profile 7, you can use all the AT commands listed in Chapter 6 of the MD 3 description 6NH7811-0AA31 that can be ordered separately.

To configure profile 7, follow the steps below:

1. Turn off the power supply to the modem.
2. Set standard profit 7 on the modem (SW2 DIL switch).
3. Connect the modem to the PC over its RS-232 port.
4. Turn on the power supply to the modem.
5. Transfer the required AT commands to the MD 3 using the terminal program.
6. Store the profile in non-volatile memory.
   Type in: AT &W7
   Modem: OK

User-configurable profile 15 for dedicated line mode

The user-configurable dedicated line profile 15 is intended mainly for applications in dedicated line mode in which the RS-485 port of the MD 3 is used. Profile 15 can, of course, also be configured so that it works in conjunction with the RS-232 port. This is useful, for example, if the user requires a transmission rate that is not available with any of the standard profiles 8 to 14.

When configuring profile 15, you can use all the AT commands listed in Chapter 6 of the MD 3 description 6NH7811-0AA31 that can be ordered separately.

The tables summarize the AT string for configuring profile 15 for dedicated line mode for use with the RS-485 and RS-232 port.

Table 5- 39 Configuration for use with the RS-485 port

Description of the profile	AT string
300 bps (buffered)	AT\N0F1&D0%E0\Q0&C2&L1&W15
1200 bps (buffered)	AT\N0F2&D0%E0\Q0&C2&L1&W15
2400 bps (buffered)	AT\N0F3&D0%E0\Q0&C2&L1&W15
4800 bps (buffered)	AT\N0F8&D0%E0\Q0&C2&L1&W15
7200 bps (buffered)	AT\N0F9&D0%E0\Q0&C2&L1&W15
9600 bps (buffered)	AT\N0F10&D0%E0\Q0&C2&L1&W15
12000 bps (buffered)	AT\N0F11&D0%E0\Q0&C2&L1&W15
144000 bps (buffered)	AT\N0F12&D0%E0\Q0&C2&L1&W15
16800 bps (buffered)	AT\N0F13&D0%E0\Q0&C2&L1&W15
19200 bps (buffered)	AT\N0F14&D0%E0\Q0&C2&L1&W15
21600 bps (buffered)	AT\N0F15&D0%E0\Q0&C2&L1&W15
24000 bps (buffered)	AT\N0F16&D0%E0\Q0&C2&L1&W15
26400 bps (buffered)	AT\N0F17&D0%E0\Q0&C2&L1&W15
28800 bps (buffered)	AT\N0F18&D0%E0\Q0&C2&L1&W15
31200 bps (buffered)	AT\N0F19&D0%E0\Q0&C2&L1&W15
33600 bps (buffered)	AT\N0F20&D0%E0\Q0&C2&L1&W15

Table 5- 40 Profile 15 - configuration for use with the RS-232 port

Description of the profile	AT string
300 bps (direct)	AT\N1F1&D0%E0\Q0&L1&W15 (standard profile 8)
1200 bps (direct)	AT\N1F2&D0%E0\Q0&L1&W15 (standard profile 9)
2400 bps (direct)	AT\N1F3&D0%E0\Q0&L1&W15 (standard profile 10)
4800 bps (direct)	AT\N1F8&D0%E0\Q0&L1&W15
7200 bps (direct)	AT\N1F9&D0%E0\Q0&L1&W15
9600 bps (direct)	AT\N1F10&D0%E0\Q0&L1&W15 (standard profile 11)
12000 bps (buffered)	AT\N0F11&D0%E0\Q0&L1&W15
14400 bps (buffered)	AT\N0F12&D0%E0\Q0&L1&W15
16800 bps (buffered)	AT\N0F13&D0%E0\Q0&L1&W15
19200 bps (buffered)	AT\N0F14&D0%E0\Q0&L1&W15 (standard profile 13)
21600 bps (buffered)	AT\N0F15&D0%E0\Q0&L1&W15
24000 bps (buffered)	AT\N0F16&D0%E0\Q0&L1&W15
26400 bps (buffered)	AT\N0F17&D0%E0\Q0&L1&W15
28800 bps (buffered)	AT\N0F18&D0%E0\Q0&L1&W15
31200 bps (buffered)	AT\N0F19&D0%E0\Q0&L1&W15
33600 bps (buffered)	AT\N0F20&D0%E0\Q0&L1&W15 (standard profile 14)

To configure profile 15, follow the steps below:

1. Turn off the power supply to the modem.
2. Set standard profit 15 on the modem (SW2 DIL switch).
3. Connect the modem to the PC over its RS-232 port.
4. Turn on the power supply to the modem.
5. Transfer the required AT strings to the MD 3 using the terminal program according to the tables.

Note

If you want to transfer AT commands to the modem in addition to those in the tables, they should be included before the AT sequence &L1&W15. The reason for this is that the modem changes to online mode following the &L1 AT command after which no further AT commands can be transferred to the MD3. In this case, the mode must first be reset with the SW2.7 DIL switch and then reconfigured.

Note

If the modem is reset with the SW2.7 DIL switch, profile 15 once again as the factory default setting. Profile 15 must then be reconfigured.

5.7.7 LTOP line transformer with overvoltage protection

Introduction

Copper dedicated lines are highly susceptible to electromagnetic interference. The coupling of extraneous voltages can be inductive or capacitive, for example due to the effects of lightning. Direct conductive coupling is also possible due to bad insulation.

The LTOP (Line Transformer with Overvoltage Protection) limits extraneous voltages and overvoltages to a non-critical level. The floating transformer also provides electrical isolation preventing coupling of voltages into other cable sections.

Note

The LTOP line transformer with overvoltage protection is intended only for connection to dedicated lines. For dial-up network applications, other suitable overvoltage protection modules should be used. Companies such as Phoenix and Dehn offer TAE6 and RJ-12 outlets with overvoltage protection.

The design, protection concept, and the LTOP variants are described in the section *LTOP line transformers with overvoltage protection*.

Note

If you require an LTOP in conjunction with the MD3 modem in dedicated line mode, only the LTOP1 variant can be used.

Connecting up the MD3 modem

The following figure shows how to connect the MD3 modem in dedicated line mode. The LTOP 1 is connected up over the standard cable 6NH7700-3BR60 that ships with the modem. This cable has RJ-12 Western plugs at both ends.

Note

Please make sure that the S1 switch is set correctly to position 2 as shown in the following figure.

Attachment to a 2-wire end point

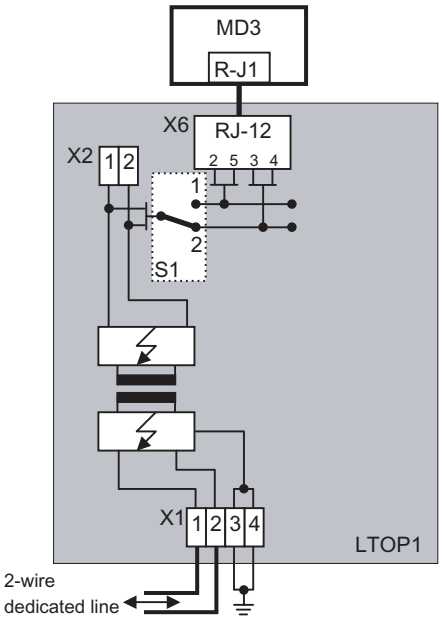

Figure 5-44 Connecting the MD3 to an LTOP1 with a 2-wire end point

5.8 ISDN dial-up modem MD4

This section describes the design of the MD4 modem, its connectors, display elements and switches.

5.8.1 Indicators and connectors accessible from the front

The following figure shows the front view of the MD4 modem with the front panels closed.

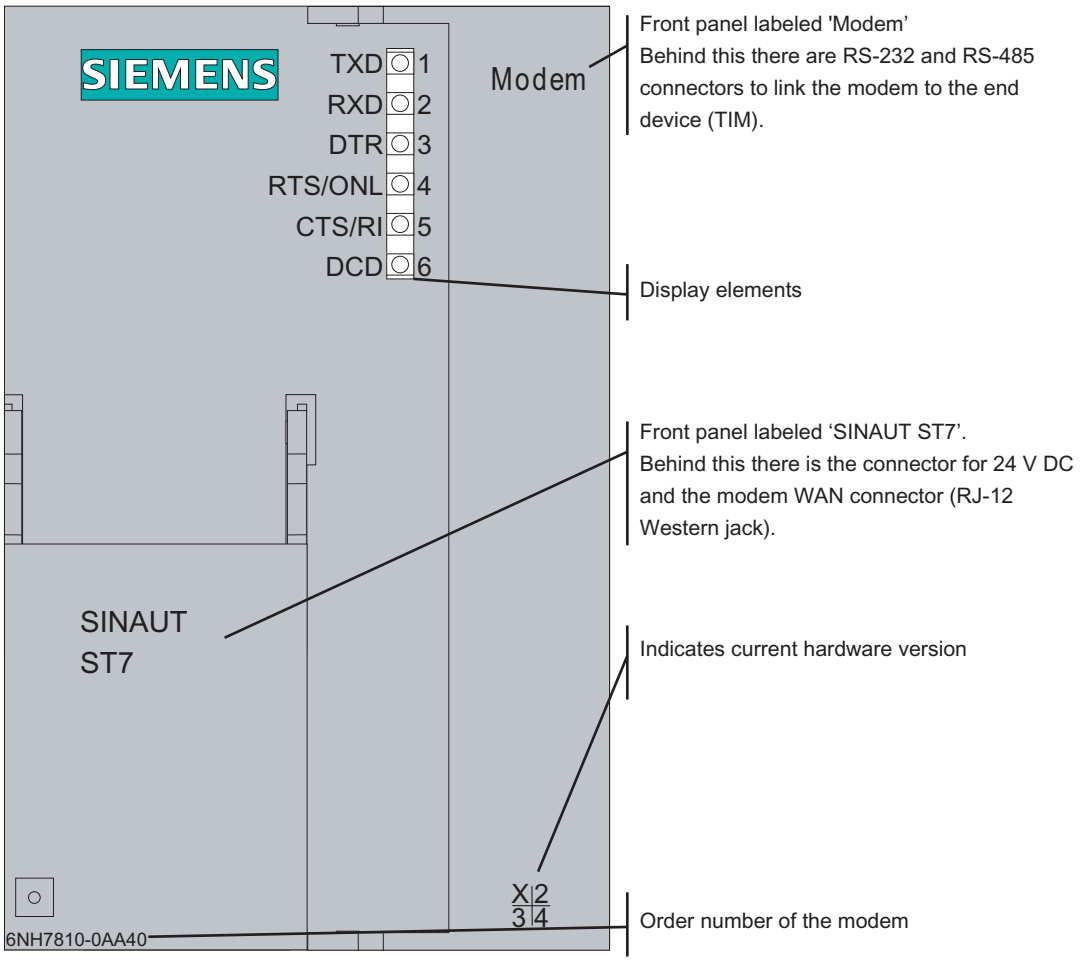

Figure 5-45 Front view of the MD4 modem with the front panels closed

LED displays of the MD4

The following table summarizes the meaning and activity of the six LEDs on the front of the modem for dial-up operation.

Table 5- 41 Meaning of the LEDs on the front of the MD4 for dial-up operation

LED no.	Labeling	Description
1	TXD	Transmit data The LED flashes in rhythm with the data flow sent to the modem by the terminal device (TIM) over the RS-232 or RS-485 interface.
2	RXD	Receive data The LED flashes in rhythm with the data flow sent by the modem to the terminal device (TIM) over the RS-232 or RS-485 interface. The data flow is indicated both in the data and in the command phase.
3	DTR	Data terminal ready Outgoing call: The LED lights up when the terminal device (TIM) wants to establish a connection and goes off as soon as the terminal device wants to terminate the established connection. If no connection can be established or the connection is terminated by the partner or is aborted due to a disruption, the terminal device deactivates the DTR signal as soon as it receives a message to this effect from the modem. Incoming call: The LED lights up when the terminal device (TIM) wants to accept an incoming call. The LED goes off again under the same conditions as with an outgoing call.
4	RTS / ONL	Modem online (ONL) "receiver taken off the hook" Outgoing call: The LED lights up as soon as the modem has received the dialing string from the terminal device (TIM) and begins connection establishment. The LED goes off again when the connection is terminated (by its own terminal device or by the partner) or when the connection is aborted due to a disruption. Incoming call: The LED lights up when the terminal device (TIM) signals with DTR that it wants to accept the incoming call. The LED goes off again under the same conditions as with an outgoing call.
5	CTS / RI	Ring indicator (RI) The LED light ups with every ring of an incoming call.
6	DCD	Connection established The LED lights up as soon as the participating modems are synchronized during connection establishment (signaled to terminal device (TIM) with CONNECT). The LED goes off when the connection is terminated or aborted due to a disruption.

The RTS and CTS signal names are irrelevant for the MD4.

Front view of the MD4 with removed front panels

The following figure once again shows the front view of the MD4 modem, here, however, the front panels have been removed to show the connectors located behind them.

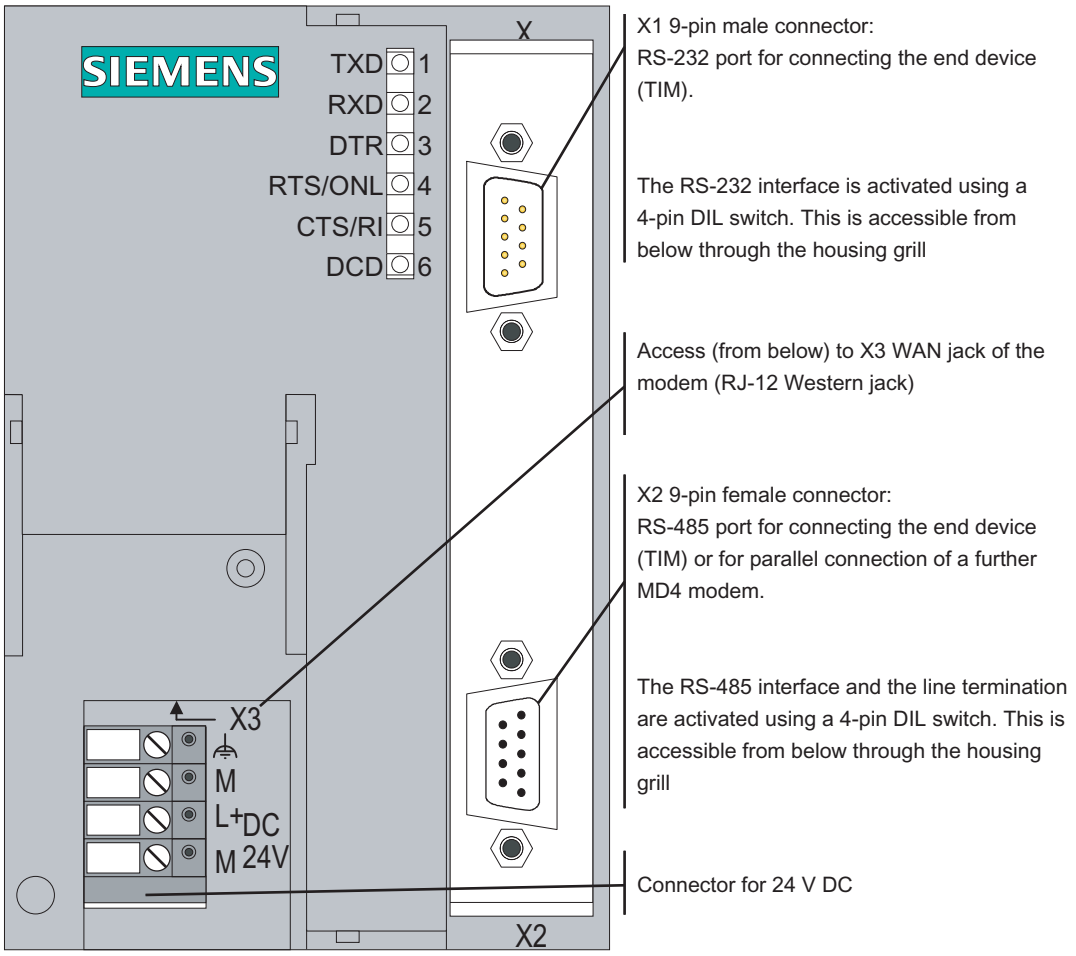

Figure 5-46 Front view of the MD4 modem with removed front panels

Pinout of the RS-232 and RS-485 ports

The X1 connector is designed as a 9-pin D-sub miniature male connector. The pinout is shown in the following table. As an RS-232 port, the pinout corresponds to that of a standardized PC connector.

The RS-232 interface can be activated using a 4-pin DIL switch accessible from below through the housing grill.

Table 5- 42 Pinout of the X1 RS-232 connector

Illustration	Pin no.	Signal name	Signal direction	Remark
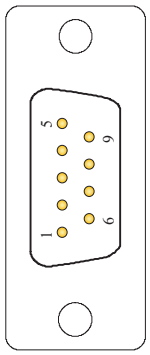	1	DCD	Output	
	2	RXD	Output	
	3	TXD	Input	
	4	DTR	Input	
	5	GND		
	6	DSR	Output	
	7	RTS	Input	
	8	CTS	Output	
	9	RI / T	Output	

The X2 RS-485 connector is designed as a 9-pin D-sub miniature female connector. The pinout is shown in the following table.

The RS-485 interface can be activated and the terminating resistor activated using a 4-pin DIL switch accessible from below through the housing grill.

Table 5- 43 Pinout of the X2 RS-485 connector

Illustration	Pin no.	Signal name	Signal direction	Remark
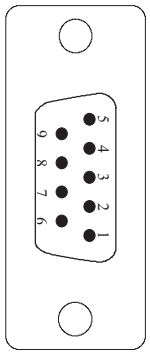	1			
	2			
	3	Data B	Bidirectional	
	4			
	5	M5	-	0 V for bus termination in connector*)
	6	P5	-	5 V for bus termination in connector*)
	7			
	8	Data A	Bidirectional	
	9			

*) It is advisable to activate the terminating resistor for the RS-485 bus in the connector and not in the modem itself.

Standard connecting cable for the RS-232 and RS-485 port

The TIM module or other terminal device with a suitable interface is connected to the X1 9-pin RS-232 connector.

The following standard connecting cable is available to attach to the X1 connector.

Table 5- 44 Standard connecting cables for the RS-232 port

Order no.	Description	Illustration
6NH7701-4AL	Connecting cable to connect the MD4 modem (RS-232) to a TIM 3V-IE / TIM 4 (RS-232) or other DTE with a 9-pin RS-232 interface with an identical pin assignment. Cable length 1.5 m	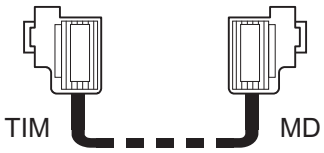

Note

The standard connecting cable 6NH7701-4AL for connecting the modem to a TIM module (RS-232) is connected to the modem "head first" so that the cable comes away towards the top.

With a TIM 4, the standard connecting cable is also connected from above. With the TIM 3V-IE variants and the TIM 4R-IE, the cable is connected from below.

The following figure shows how the connecting cable listed above is assembled.

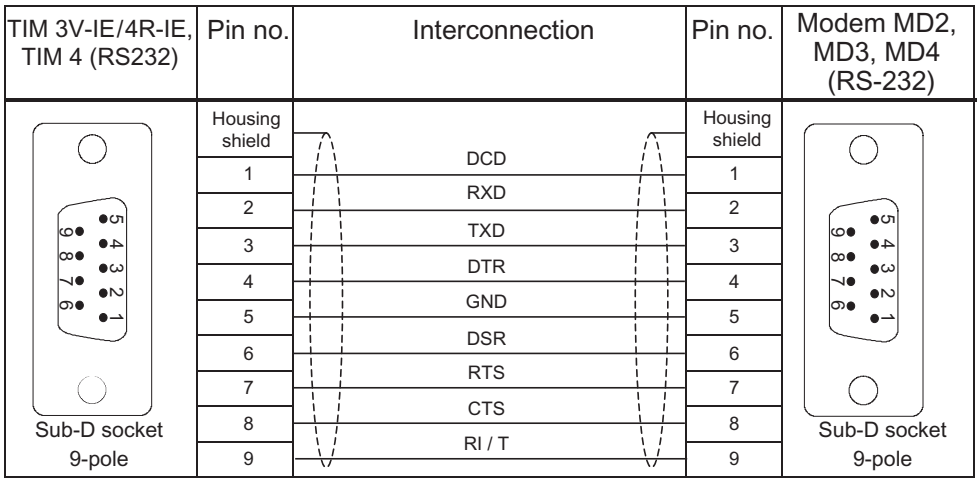

Figure 5-47 Assembly of the standard connecting cable 6NH7701-4AL

You will find an example of connecting the MD4 modem to a TIM and to an ISDN outlet below in the section *Connecting the MD4 to a TIM and ISDN outlet*.

5.8.2 Configuration switches accessible from above

Configuration switches accessible from above

The following figure shows the MD4 modem from above. It shows the location of the 4-pin DIL switch that is accessible from above.

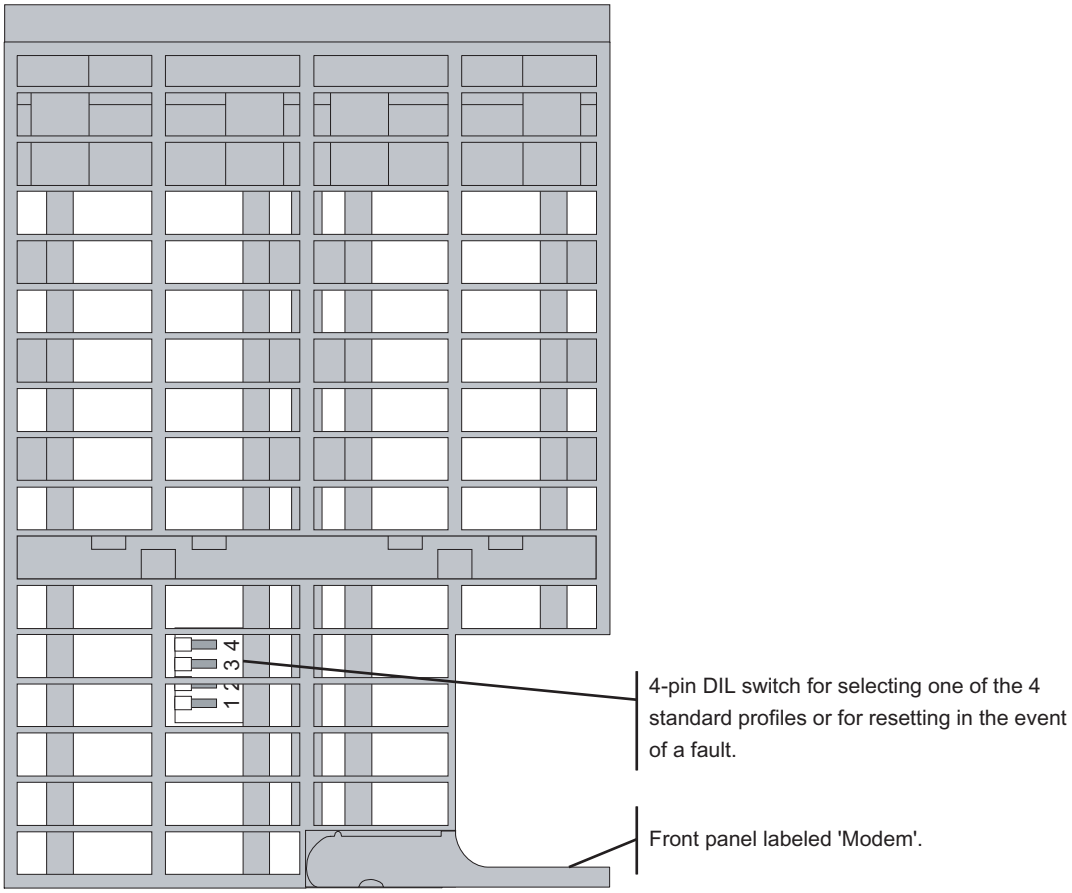

Figure 5-48 View of the MD4 modem from above

Settings with the DIL switches accessible from above

The MD4 modem has a 4-pin DIL switch mounted directly on the grill of the housing.

The DIL switch has the following function:

- Setting the mode
- Setting one of the four standard profiles for the dialing mode
- Reset function

The following figure summarizes the possible settings.

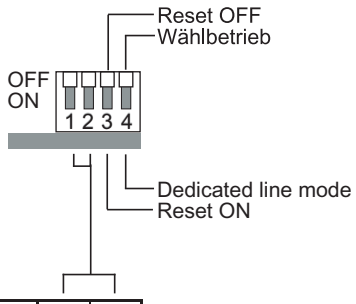

Standard-Profil für Wählnetz		1	2
1	AT mode	OFF	OFF
2	V.25bis, 1200 bps	ON	OFF
3	V.25bis, 2400 bps	OFF	ON
4	V.25bis, 9600 bps	ON	ON

Figure 5-49 Possible settings with the DIL switch accessible from above

Note

The MD4 modem adopts the settings at the DIL switch only when the 24 V DC power supply is turned on. While the settings are being adopted, the MD4 indicates this by the four lower LEDs lighting up in sequence. As soon as the LEDs start flashing sequence, the set function has been adopted.

Settings for dialing mode

For dialing mode, a standard profile must be set. The setting is made with the 4-pin DIL switch. Standard profiles 0 to 3 are default settings that enable the MD4 modem to be operated without any programming using a terminal program if one of these standard profiles matches the intended application. Each standard profile can also be freely configured by the user and therefore requires programming by a terminal program before it can be put into operation.

The procedure is as follows:

Turn of the power supply and set all four switches mentioned above to the required position. When you turn on the power supply, the modem then adopts the selected setting.

Note

Standard profile 0 should be selected for connecting the MD4 to a TIM.

The following table lists the properties of the individual profiles and how to set them using the switches mentioned above.

Table 5- 45 Overview of the configurable standard profiles for dialing mode

Profile no.	Description of the profile	Profile setting on DIL switch SW1 (SW1.3 = ON)
0	AT command set Data format: • In the command phase: Self-adapting • In the data phase: 10 bits (8N1) (factory default)	
1	V.25bis, 1200 bps V.23 hx Data format: • In the command phase: 10 bits (7E1) • In the data phase: 11 bits (8E1)	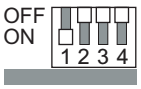
2	V.25bis, 2400 bps V.22bis Data format: • In the command phase: 10 bits (7E1) • In the data phase: 11 bits (8E1)	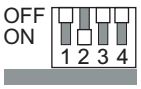
3	V.25bis, 9600 bps V.32 Data format: • In the command phase: 10 bits (7E1) • In the data phase: 11 bits (8E1)	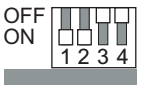

Resetting the modem

If the configuration of the modem is unclear, you can reset to the factory default settings. When you reset the modem, all four standard profiles for dialing mode are reset to the factory defaults.

Procedure:

1. Power supply OFF
2. Set switch 3 to ON and switch 1, 2 and 4 to OFF
3. Power supply ON and then wait until the lower four LEDs have stopped flashing in sequence.
4. Power supply OFF, set switch 3 to OFF
5. Select basic setting for dedicated line mode or standard profile for dialing mode and then power ON

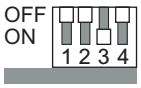

Figure 5-50 Setting the DIL switch to reset the MD4 modem

Note

Following the reset, the settings made with the terminal program for the dedicated line mode are deleted. The settings must therefore be transferred to the modem again using the terminal program.

Factory setting on the DIL switch

When it ships, the modem has the following default settings:

- Standard profile 0: AT mode
- Reset OFF

When shipped, the switches are set as shown in the following figure.

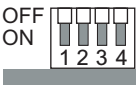

Figure 5-51 Factory setting on the DIL switch

5.8.3 Connectors and configuration switches accessible from below

The following figure shows the MD4 modem from below with the X3 RJ-12 Western jack and the DIL switch for activating the RS-232 or RS-485 interface.

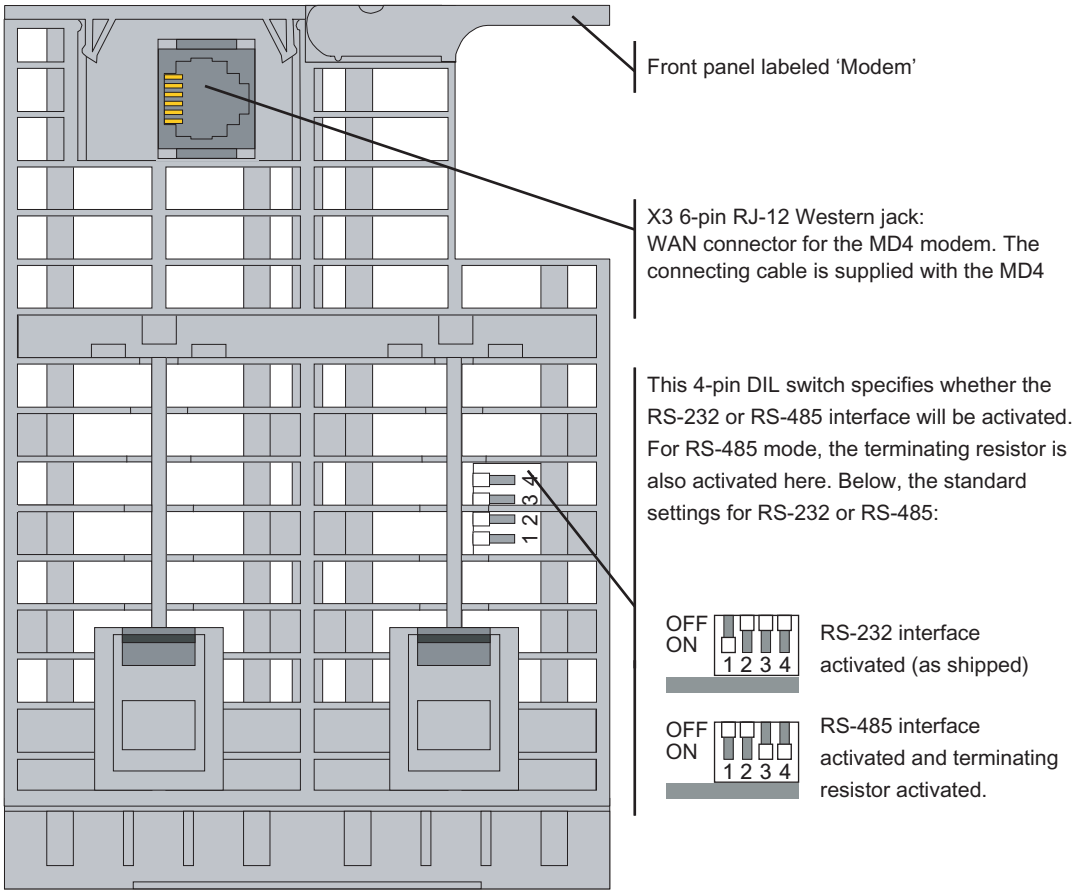

Figure 5-52 View of the MD4 modem from below

Settings with the DIL switches accessible from below

A 4-pin DIL switch on the bottom of the modem housing is accessible from below. This DIL switch is used to activate either the RS-232 or RS-485 interface. For RS-485 operation, you can also activate the terminating resistor. The following figure shows the possible settings in general.

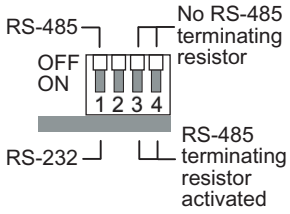

Figure 5-53 Possible settings on the 4-pin DIL switch accessible from below

Pinout of the RJ-12 Western jack

The X3 connector of the MD4 modem is designed as a 6-pin RJ-12 Western jack. The pinout is shown in the following table.

Table 5- 46 Pinout of the X3 RJ-12 jack for the MD4 modem

Illustration	Pin no.	Signal name	Signal direction	Remark
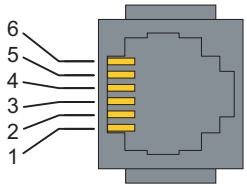	1	-		
	2	TX-		
	3	RX-		
	4	RX+		
	5	TX+		
	6	-		

Standard connecting cable for the RJ-12 port

The connecting cable 6NH7700-4AR60 ships with every MD4 modem. This allows the modem to be connected to an ISDN S_0 outlet.

The connecting cable can also be ordered as a spare under the number shown.

Table 5- 47 Standard connecting cable for the MD4 modem

Order no.	Description	Illustration
6NH7700-4AR60	Connecting cable with RJ-12 and RJ-45 plug to connect an MD4 modem (RJ-12) with an ISDN-S_0 jack (RJ-45). Cable length 6 m	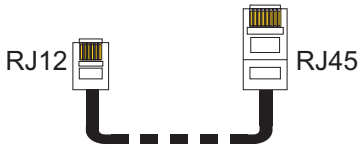

Note

It is best to hold the cable just below the RJ-12 plug. This makes it easier to insert the plug than if you hold the RJ-12 plug itself. When inserting it, make sure that you can hear the RJ-12 connector click into place!

The following table shows the pinout of the two connectors for the above standard connecting cable.

Table 5- 48 Pinout of the RJ-12 and RJ-45 Western connectors

RJ-12 Western plug		Signal name	RJ-45 Western plug	
Illustration	Pin no.		Pin no.	Illustration
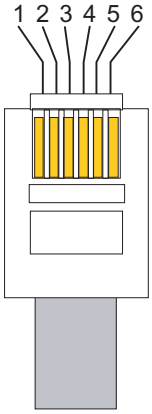		-	1	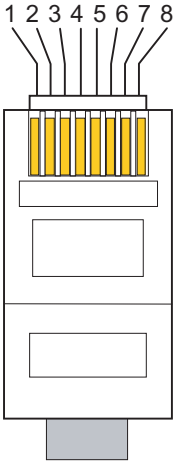
	1	-	2	
	2	TX-	3	
	3	RX-	4	
	4	RX+	5	
	5	TX+	6	
	6	-	7	
		-	8	

5.8.4 Connecting the MD4 with a TIM and ISDN outlet

The following figure summarizes how the MD4 modem is connected to a TIM (over RS-232) and with the ISDN outlet (S_0) using the specified standard connecting cables.

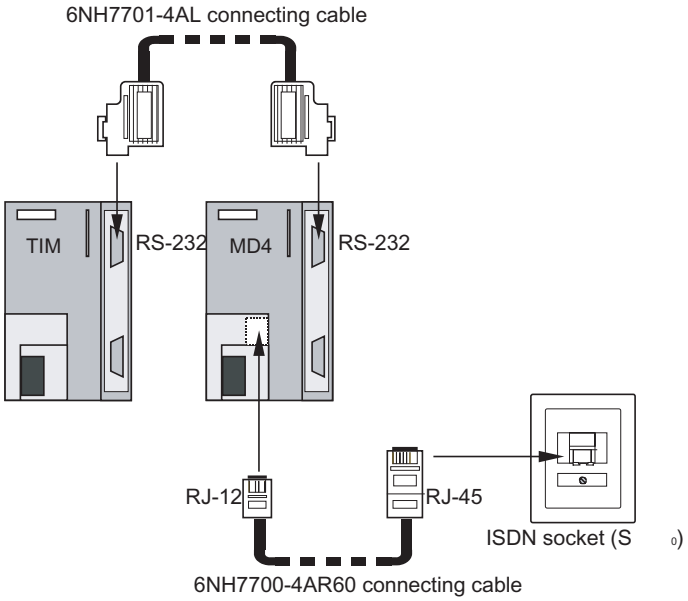

Figure 5-54 Connecting the MD4 with a TIM and ISDN outlet (S_0)

Note

Any TIM with an RS-232 port can be used, in other words, the two TIM 3V-IE variants, the TIM 4R-IE and the TIM 4.

5.9 Installing and putting a SINAUT MD2, MD3, MD4 modem into operation

5.9.1 Installation

Introduction

The MD2, MD3 and MD4 modems can be installed on a SIMATIC S7-300 rail or using the 6NH7760-0AA adapter (must be ordered separately) on a 35 mm standard rail.

The modem can be operated both in a horizontal and in a vertical installation.

Note

Before the modem is installed on the S7-300 or standard rail, all the DIL switches of the modem must be set correctly for operation. These switches are practically inaccessible when the module is installed.

5.9.2 Installation on an S7-300 rail

Note

If you want to install the modem along with other S7-300 modules, remember that the modem does not have an S7-300 backplane bus. There must therefore be no S7-300 module that communicates with the S7 CPU over the backplane bus (SM, FM or CP) installed to the right of the modem.

Order of installation

To install the modem on an S7-300 rail, follow the steps below in the order shown:

1. Turn off the power supply to which the modem will be connected.
2. Place the modem on the rail and push it in towards the bottom.
3. Screw the modem tight.
4. Connect the modem to the power supply.

5. Insert the cable supplied with a modem into the X3 RJ-12 Western jack. This is located above the power supply connector of the modem. The catch of the RJ-12 plug must be on the right hand side when it is inserted.

   Note

   It is best to hold the cable just below the RJ-12 plug. This makes it easier to insert the plug than if you hold the RJ-12 plug itself. When inserting it, make sure that you can hear the RJ-12 connector click into place!

6. To connect the modem to the TIM, the 9-pin D-sub connector of the mode and connecting cable must be plugged onto the X1 connector (RS-232 interface) or X2 connector (RS-485 interface) of the modem and screwed tight.

   Note

   The standard connecting cable 6NH7701-4AL for connecting the modem to a TIM module (RS-232) is connected to the modem "head first" so that the cable comes away towards the top.

   With a TIM 4, the standard connecting cable is also connected from above. With the TIM 3V-IE variants and the TIM 4R-IE, the cable is connected from below.

7. To install further modems in a rack, follow the same steps as described above.
8. Once all the modems are installed, the power supply can be turned on.
   - A type MD2 or MD4 modem starts up but does not indicate anything with its LEDs until it is activated by the TIM.
   - The MD3 modem starts up and indicates the presence of the power supply by its DCD LED lighting up. The other LEDs of the modem only light up when it is activated by the end device.

5.9.3 Installation on a 35 mm standard rail

To install the modem on a 35 mm standard rail, the 6NH7760-0AA adapter is required (must be ordered separately).



Figure 5-55 Adapter for installation on a 35 mm standard rail

Fit the modem onto the adapter in the same way as the modem is fitted to an S7-300 rail. Screw the modem to the adapter. The modem is now prepared for installation on a standard rail and can be clipped onto it.

The remaining steps in installation are analogous to installation on an S7-300 rail.

5.9.4 Horizontal and vertical installation

Horizontal and vertical installation

A SINAUT modem can be operated both in a horizontal and in a vertical installation.

Permitted ambient temperature

The SINAUT modems can be operated in the same temperature range specified for the S7-300.

Table 5- 49 Permitted ambient temperature for SINAUT modems

Installation position	Permitted ambient temperature
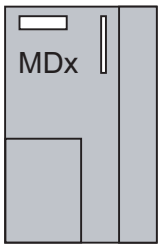 Horizontal	0 to 60 °C
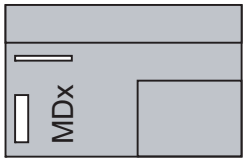 Vertical	0 to 40 °C

Dimensions for installing SINAUT modems

Table 5- 50 Dimensions for installing SINAUT modems

Module	Module width	Module height	Max. depth
Modem module MD2, MD3 and MD4	80 mm	125 mm	120 mm or 180 mm with open front panel

5.9.5 Connecting to the power supply

WARNING

Connecting the modem module to a live power supply can damage the module. Connect the modem to the power supply only when the power supply is off.

WARNING

The power for the device (24 V DC) must be generated as a safe extra low voltage. This means it must be a SELV (Safety Extra Low Voltage) or PELV (Protective Extra Low Voltage) according to DIN VDE 0100 Part 410 (IEC 60364-4-41).

Cables

To wire the power supply, use flexible cables with a cable cross-section of 0.25 ... 0.75 mm2. If you wire only one cable per connection, no wire-end ferrule is necessary.

Wiring

To wire up the power supply module with a SINAUT modem, follow the steps below:

1. Open the front panels of the power supply unit and the modem.
2. Connect the power supply cables from the power supply unit to the modem: M and L+
3. Close the front panels.

Note

To avoid ground loops, do not connect the shielding of the modem.

Wiring diagram

The figure below shows the wiring diagram for one or more modems and a TIM. The same wiring diagram applies to all modules.

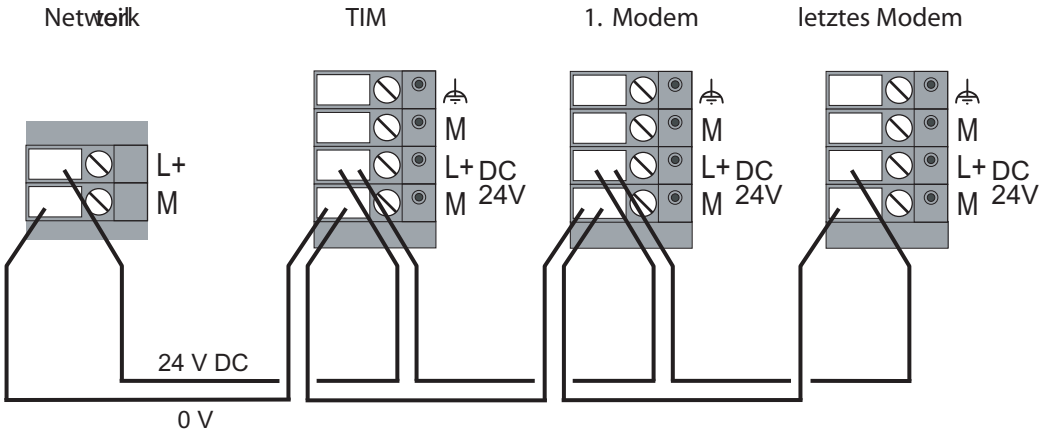

Figure 5-56 Connection to the 24 V DC power supply

Note

The two TIM 3V-IE variants and the TIM 4R-IE do not have a 4-ping but a 2-pin terminal strip for connection of the 24 V DC power supply (L+ and M).

Certifications and approvals

6

Approvals issued

NOTICE
Issued approvals on the type plate of the device The specified approvals apply only when the corresponding mark is printed on the product. You can check which of the following approvals have been granted for your product by the markings on the type plate.

Standards and test specifications

The device meets the following standards and test specifications. The test criteria for the module are based on these standards and test specifications.

6.1 Approvals for the TIM 4R/4RD and the SINAUT modems

List of SINAUT ST7 products

The CE declaration and the approvals listed in this section relate to the following products:

Device	Order no.
TIM 4R	6NH7 800-4AA90
TIM 4RD	6NH7 800-4AD90
SINAUT MD2	6NH7 810-0AA20
SINAUT MD3	6NH7 810-0AA30
SINAUT MD4	6NH7 810-0AA40

Installation guidelines

The products meet the following requirements if you adhere to the configuration instructions contained in this product documentation, see section Installation guide (Page 97), and installation instructions, see sections Installing and putting a TIM into operation (Page 131) and Installation and commissioning of the modems and routers (Page 185).

Overview of approvals and standards

- EU directive "Safety"

  EN 60950-1

  Information technology equipment - Safety

- EU directives on electromagnetic compatibility
  - EU Directive EMC 2004/108/EEC

    The products listed above comply with the requirements of the EU Directive 2004/108/EEC "Electromagnetic Compatibility" and the Harmonized European Standards (EN) published in this connection.
  - EU Directive TTE 1999/5/EEC

    The products listed above comply with the requirements of the EU Directive 1999/5/EU "Directive of the European Parliament and Council Governing Radio and Telecommunication Terminal Equipment and the Mutual Recognition of their Conformity".
  - EN 55022

    Information technology equipment - Radio disturbance characteristics
  - EN 61000-3-2

    Limit values for harmonic current emissions
  - EN 61000-3-3

    Limits – Limitation of voltage changes
  - EN 61000-4-2

    Electrostatic discharge
  - EN 61000-4-3

    Radiated electromagnetic field
  - EN 61000-4-4

    Fast transients
  - EN 61000-4-5

    Surge immunity (power supply)
  - EN 61000-4-6

    Cable-propagated interference
  - EN 60870-2-1

    Immunity (equipment in areas without special protection)

CE declaration of conformity

CE

In accordance with the EU directives mentioned above, the EU conformity declarations are available for the relevant authorities at the following address:

Siemens Aktiengesellschaft
Industrial Solutions & Services
I&S IS 6 E D
Postfach 3249
D-91050 Erlangen

EU directives and standards

Standard	TIM 4R	TIM 4RD	MD2	MD3	MD4
EMC 2004/108/EEC (EN 55022)	Class A *	Class A *	Class B **	Class B **	Class B **
TTE 1999/5/EEC	-	-	1	-	2
EN 60870-2-1 (1996)	●	●	●	●	●
EN 61000-3-2 / EN 61000-3-3	● ***	● ***	●	●	●
EN 61000-4-2	●	●	●	●	●
EN 61000-4-3	●	●	●	●	●
EN 61000-4-4	●	●	●	●	●
EN 61000-4-5	●	●	●	●	●
EN 61000-4-6	●	●	●	●	●
EN 60950-1 ****	●	●	●	●	●

●: Means that the device has the approval or meets the standard.

-: Means that the device does not have the approval or does not meet the standard.

Class A *: EN 55022, class A: Industrial area

Class B **: EN 55022, class B: Domestic

1: CTR / TBR 15 (analog leased lines, 2-wire);
CTR / TBR 17 (analog leased lines, 4-wire)

2: CTR / TBR 3 (digital leased lines)

***: Operation of the device only within a closed, metallic cabinet

****: The requirements of EN 60950-1 relating to bottoms of fire enclosures are not met. The device does not have a fire-proof enclosure. It is therefore necessary to install the system in a cabinet or comparable housing that serves as a fire-proof housing.

FM approval

The SINAUT ST7 products included in the "List of SINAUT ST7 products" are certified as follows:

FM Approval according to Factory Mutual Approval Standard Class Number 3611, Class I, Division 2, Group A, B, C, D

⚠ WARNING

Injury to persons and damage to property is possible.
Injury to persons and damage to property can occur in hazardous areas in the connecting cables are removed while a SINAUT ST7 device is in operation.
Always turn off the power to SINAUT ST7 devices before removing connecting cables in hazardous areas.

UL/CSA approval

The SINAUT ST7 products included in the "List of SINAUT ST7 products" are certified as follows:

UL Recognition Mark
Underwriters Laboratories (UL) based on:
Standard UL 508

CSA Certification Mark
Canadian Standards Association (CSA) based on:
Standards CSA No. 14 and 142
File no. E208174

Approvals of the MD720-3 and MD741-1

You will find the approvals of the GSM modem SINAUT MD720-3 and the GPRS router SINAUT MD741-1 in the manual of the relevant product and in the section Technical specifications of the SINAUT mobile wireless components (Page 49).

6.2 Additional approvals for SINAUT products for the analog telephone network

SINAUT ST7 products for the analog telephone network including the MD3 modem

Name	Order no.	Hardware version
TIM 33	6NH7 800-3AA30	6 or higher
TIM 43	6NH7 800-4AA30	6 or higher
TIM 43D	6NH7 800-4AD30	6 or higher
MD3	6NH7 810-0AA30	4 or higher

For the stand-alone MD3 modem and for all TIM modules with integrated MD3 modems listed in the table, the following certifications apply for Europe, USA and Canada.

Approval for Europe

Approval regulations

The MD3 is intended for connection to the analog public telecommunication network. In Germany, the device is connected with the standard TAE6 connecting cable with N coding supplied with the device. The telephone line is passed through and allows down-line connection of an approved telephone.

It should be pointed out that if a handset is off the hook when the modem terminates the connection, there may still be an established connection that is subject to charge.

The device meets the requirements of the "Allgemeinen Anschalterlaubnis" (AAE) "general connection permit". Anyone may connect and operate the device over the standard plug ("Telekommunikations-Anschalte-Einrichtungen" (TAE)).

EU approval

In accordance with the Council ruling 98/482/EEC, this device is approved for connection as an individual terminal device in the public telephone network. Due to the differences existing between the public telephone networks in various countries, this approval is not necessarily a guarantee for successful operation of the device at all network connection points.

Network compatibility

This product conforms to both the European standard TBR21 and national regulations according to the European Telecommunications Standards Institute (ETSI) Guide EU 201121 (R&TTE Directive) This product therefore operates without problems in the PSTN network of all countries of the EU and in countries that support the TBR21 standard.

Approval for the USA

EXHIBIT J (FCC PART 68 REQUIREMENTS)

This equipment complies with Part 68 of the FCC Rules. On the soldering side of this equipment is a label that contains, among other information, the FCC Registration Number and Ringer Equivalence Number (REN) for this equipment. You must, upon request, provide this information to your telephone company.

This equipment uses **RJ12** plugs.

An FCC compliant telephone cord and modular plug are provided with this equipment. This equipment is designed to be connected to the telephone network or premises wiring using a compatible modular jack which is part 68 compliant. See installation instructions for details.

The REN is useful to determine the quantity of devices you may connect to your telephone line and still have all those devices ring when your telephone number is called. In most, but not all areas, the sum at the RENs of all devices connected to one line should not exceed five (5.0). To be certain of the number of devices you may connect to your line, as determined by the REN, you should contact your local telephone company to determine the maximum REN for your calling area.

If your telephone equipment causes harm to the telephone network, the Telephone Company may discontinue your service temporarily. If possible, they will notify you in advance. But if advance notice is not practical, you will be notified as soon as possible. You will be informed of your right to file a complaint with the FCC.

Your telephone company may make changes in its facilities, equipment, operations or procedures that could affect the proper functioning of your equipment. If they do, you will be notified in advance to give you an opportunity to maintain uninterrupted telephone service.

If you experience trouble with this telephone equipment, please contact

SIEMENS Energy & Automation, Inc.
Factory Service Center
3000 Bill Garland Road
Johnson City, Tennessee 37605

Tel: (423) 461-3000

for information on obtaining service or repairs. The telephone company may ask that you disconnect this equipment from the network until the problem has been corrected or until you are sure that the equipment is not malfunctioning.

This equipment may not be used on coin service provided by the telephone company. Connection to party lines is subject to state tariffs.

Approval for Canada

INDUSTRY CANADA (IC) NOTICE

The Industry Canada (IC) label identifies certified equipment. This certification means that the equipment meets telecommunications network protective, operational and safety requirements as prescribed in the appropriate Terminal Equipment Technical Requirements document(s). The department does not guarantee the equipment will operate to the user's satisfaction.

Before installing this equipment, users should ensure that it is permissible to be connected to the facilities of the local telecommunications company. The equipment must also be installed using an acceptable method of connection. The customer should be aware that compliance with the above conditions may not prevent degradation of service in some situations,

Repairs to certified equipment should be coordinated by a representative designated by the supplier. Any repairs or alterations made by a user to this equipment, or equipment malfunctions, may give telephone communications company cause to request the user to disconnect the equipment.

Users should ensure for their own protection, that the electrical ground connections of the power utility, telephone lines an international metallic water pipe system, if present, are connected together. This precaution may be particularly important in rural areas.

⚠ CAUTION
Caution Users should not attempt to make such connections themselves, but should contact the appropriate electric inspection authority or electrician, as appropriate.

Note

Note

The Ringer Equivalence Number (REN) assigned to each terminal device provides an indication of the maximum number of terminals allowed to be connected to a telephone interface. The termination on an interface may consist of any combination of devices subject only to the requirement that the sum of the Ringer Equivalence Numbers of all the devices does not exceed 5.

REN: 0.9

Repair Service Center:

SIEMENS Energy & Automation, Inc.
Factory Service Center
3000 Bill Garland Road
Johnson City, Tennessee 37605

Tel. +1 (423) 461-3000

6.3 Approvals for the TIM 3V-IE variants and the TIM 4R-IE

Product name

Name	Order number
TIM 3V-IE	6NH7 800-3BA00
TIM 3V-IE Advanced	6NH7 800-3CA00
TIM 4R-IE	6NH7 800-4BA00

Note

You can find the currently valid certificates and approvals on the type plate of each product.

IEC 61131-2

The SINAUT products listed above fulfill the requirements and criteria of the IEC 61131-2 standard (Programmable Logic Controllers, Part 2: equipment requirements and verifications).

CE mark

The SINAUT products listed above fulfill the requirements and protection goals of the following EC directives and meet the harmonized European standards (EN) that have been published for the programmable logic controllers in the official journals of the European communities:

- 2004/108/EEC "Electromagnetic Compatibility" (EMC Directive)
- 94/9/EC "Equipment and protective systems intended for use in potentially explosive atmospheres" (Explosion Protection Directive)

You will find the EC Declaration of Conformity for this product on the Internet at the following address:

(http://support.automation.siemens.com/WW/view/en/10805878) → Tab "Entry List"

Filter settings:

- Entry type: "Certificates"
- Certificate type: "Declaration of Conformity"
- Search item(s): <Name of the module>

The EC Declarations of Conformity are available for the responsible authorities according to the above-mentioned EC Directive at the following address:

- Siemens Aktiengesellschaft
  Industry Automation
  Industrielle Kommunikation SIMATIC NET
  Postfach 4848
  D-90327 Nürnberg

EMC Directive

The SINAUT products listed above are designed for use in an industrial environment.

Area of application	Requirements	
	Emission	Immunity
Industry	EN 61000-6-4 : 2001	EN 61000-6-2 : 2001

Explosion Protection Directives

Complying with EN 50021 (electrical apparatus for potentially explosive atmospheres; Type of protection "n")

II 3G Ex nA II T3...T6

Note

When using (installing) SIMATIC NET product in zone 2 hazardous areas make sure that you note the following "Special conditions"!

You will find these conditions on the SIMATIC NET Manual Collection (DVD ships with every product):

- Directory: All documents
- Document name: "Approval of SIMATIC/SIMATIC NET Products for Direct Installation in Ex-Zone 2"

Installation guidelines

The product meets the requirements if you adhere to the installation guidelines included in this manual during installation and operation.

⚠ WARNING

Personal injury and property damage can occur.

By installing expansions that are not approved for SINAUT products or their target systems, the requirements and regulations relating to safety and electromagnetic compatibility may be violated.

Use only expansions approved for the system.

Notes for Australia

The above listed SINAUT products meet the requirements of the standard AS/NZS 2064 (Class A).

UL und CSA approvals

Note

You will recognize the approval, UL/CSA or cULus, assigned to your product from the mark on the rating plate.

UL approval

UL Recognition Mark Underwriters Laboratories (UL) complying with Standard UL 508:

- Report E 85972

CSA approval



CSA Certification Mark Canadian Standard Association (CSA) complying with Standard C 22.2 No. 142:

- Certification Record 063533–C-000

CULus approval, hazardous location



CULUS Listed 7RA9 IND. CONT. EQ. FOR HAZ. LOC.
Underwriters Laboratories Inc. complying with

- UL 508 (Industrial Control Equipment)
- CSA C22.2 No. 142 (Process Control Equipment)
- UL 1604 (Hazardous Location)
- CSA–213 (Hazardous Location)

APPROVED for Use in

- Cl. 1, Div. 2, GP. A, B, C, D T4A
- Cl. 1, Zone 2, GP. IIC T4
- Cl. 1, Zone 2, AEx nC IIC T4

⚠ WARNING

Explosion Hazard -
Do not disconnect while circuit is live when a flammable or combustible atmosphere is present.

⚠ WARNING

Explosion Hazard -
Substitution of components may impair suitability for Class I, Division 2.

Note

This equipment is suitable for use in Class I, Division 2, Group A, B, C, D or non-hazardous locations only.

Note

This plant has to be mounted according to the NEC (National Electrical Code) stipulations.

When used in environments according to class I, division 2 (see above) , the SINAUT products must be mounted in an enclosure that corresponds to at least IP54 according to EN 60529.

FM approval



Factory Mutual Approval Standard Class Number 3611, Class I, Division 2, Group A, B, C, D.

⚠ WARNING

Personal injury and property damage can occur.

In hazardous areas, personal injury or property damage can result if you create or break an electrical circuit during operation of a SINAUT product (for example, by means of plug-in connections, fuses, switches).

Do not create or break live electric circuits unless you are certain there is no danger of explosion.

If you use SINAUT products under FM conditions, they must be mounted in an enclosure that at least corresponds to IP54 in accordance with EN 60529.

References

A

A.1 Introduction to S7 CMs/CPs

Where to find Siemens documentation

- You will find the order numbers for the Siemens products of relevance here in the following catalogs:
  - SIMATIC NET Industrial Communication / Industrial Identification, catalog IK PI
  - SIMATIC Products for Totally Integrated Automation and Micro Automation, catalog ST 70

  You can request the catalogs and additional information from your Siemens representative.
- You will find SIMATIC NET manuals on the Internet pages of Siemens Automation Customer Support:

  Auto-Hotspot

  Enter the entry ID of the relevant manual as the search item. The ID is listed below some of the reference entries in brackets.

  As an alternative, you will find the SIMATIC NET documentation on the pages of Product Support:

  Auto-Hotspot

  Go to the required product group and make the following settings:

  → Entry list → Entry type "Manuals / Operating Instructions"

  You will find the documentation for the SIMATIC NET products relevant here on the data medium that ships with the product:
  - Product CD / product DVD or
  - SIMATIC NET Manual Collection

A.2 /1/

SIMATIC
S7-300
CPU 31xC and 31x: Installation
Operating instructions
Entry ID: 13008499 (http://support.automation.siemens.com/WW/view/en/13008499)
Siemens AG

A.3 /2/

SIMATIC NET
GPRS/GSM modem SINAUT MD720-3
system manual
Siemens AG
Entry ID: 23117745 (http://support.automation.siemens.com/WW/view/en/23117745)

A.4 /3/

SIMATIC NET
EGPRS/GPRS router SINAUT MD741-1
system manual
Siemens AG
entry ID: 31385703 (http://support.automation.siemens.com/WW/view/en/31385703)

A.5 /4/

SIMATIC NET
UMTS router with HSDPA SCALANCE M873-0
system manual
Siemens AG
Entry ID: 49507278 (http://support.automation.siemens.com/WW/view/en/49507278)

Glossary

Analog value

An analog value is an analog process variable such as pressure, temperature etc. It is acquired over an analog input as a current or voltage value and converted by this module to a binary-coded value. In total, the converted value occupies 1 word; in other words, 16 bits including sign bit.

APN - Access Point Name

DNS host name of the access point for an external network (in this case: access point in the GPRS network to the Internet).

Automation program

The automation program is the program section on the CPU that monitors and controls the technological process.

COM port

→ *RS-232*

Command

A command is binary information that is transferred once as a 1 when there is a signal change from 0 to 1. The trailing edge from 1 to 0 does not trigger transmission again. At the receiving end, a command is either output as a pulse (selectable duration) or it is reset by the local user program after it is has been executed. 8 commands are put together to form a byte.

When inputting and outputting commands, reliability and safety are important. At the input end, for example, there is a check to determine whether only one command is pending at the time of acquisition (1-out-of-n check). Only then is the transmission triggered. If several commands are pending at the same time, an error is detected. There is no transmission. To transmit a command byte, a total of 1 word is used: One "original" command byte and a copy. At the receiving end, a command is only output when the "original" command byte and the copy have the identical content and when only 1 command was received (once again a 1-out-of-n check).

Conditional spontaneous message

In the dial-up network, you can specify whether or not a change causes a "conditional spontaneous" or "unconditional spontaneous" transmission for each individual message.

Conditional spontaneous messages are initially only entered in the send buffer of the TIM. They are only transmitted when a connection is established to the partner for whatever reason, for example because an unconditional spontaneous message needs to be transmitted or because the partner calls.

Even when using pay by volume transmission in a GPRS network, message prioritization "conditional spontaneous" can also be used. Such a message is not transmitted immediately, but is first buffered. In a GPRS network, the TIM stores "conditional spontaneous" messages in the following situations:

- When the collected messages reach or exceed a size of 202 bytes.
- When an important message (priority "conditional spontaneous" or "alarm") needs to be transmitted immediately.
- When the collected messages have not yet reached a volume of 202 bytes, but the TCP/IP keepalive interval expires.

Configuration

During configuration, communication- and connection-specific system settings are made for each device.

Counted value

A counted value (for example amount of flow) is acquired over a digital input as a pulse train and totaled to produce a binary-coded value. A counted value is 2 words: 28 bits for the binary-coded value 4 display bits.

CP

Communications processor

CPU

(Central Processing Unit)

The CPU handles the central sequential control and coordination of all activities of the module.

CSD

(Circuit Switched Data)

Service in GSM for wireless transmission of data at 9 600 bps full duplex. Connections can be established to other GSM devices, to analog modems or to ISDN modems in the fixed network. The connection establishment can be started at both ends. Only dial-up connections are supported.

Data messages

The actual transmission of data takes the form of data messages. These contain a fixed amount of a specific information type.
There are status messages, analog value messages, counted value messages, command messages, setpoint messages, parameter messages and data messages for the various information types.

DCF77 radio clock

DCF77 is a time signal transmitted on the normal frequency 77.5 kHz as encoded time information. Reception of the time signal is restricted to Western Europe.

Some TIM variants (TIM 4VD, TIM 42D, TIM 43D, TIM 44D, TIM 4RD) are equipped with a DCF77 receiver module that can receive the DCF77 time signal either over an indoor or outdoor antenna. The ST7 time management currently requires the existence of a DCF77 time signal to allow time synchronization of the stations and the control center throughout a network.

For applications that cannot receive the DCF77 time signal, SINAUT provides a GPS receiver module with a GPS outdoor antenna that converts the GPS Time signal for the DCF77 receiver module.

Direct data communication

Communication between two stations. In dial-up networks or in Ethernet, this is achieved by direct connection establishment between the two stations. On dedicated lines and in wireless networks or in GPRS mobile wireless service or when using the MSC protocol, direct communication is more "indirect". It is switched via the closest → master TIM.

DSL

Digital Subscriber Line

DSL is used mainly for transmission of telephone and Internet data. By using a higher bandwidth, data can be transmitted at transmission speeds in the two to three figure Mbps range.

Ethernet / Industrial Ethernet

Industrial Ethernet is a powerful communication network complying with the international standard IEEE802.3 (Ethernet) that was optimized to meet the requirements of industrial application. Ethernet is designed with a linear or star topology. The transmission media are shielded coaxial cables, twisted pair, or fiber-optic cables. SIMATIC NET Industrial Ethernet uses both the Ethernet and Fast Ethernet standards.

Ethernet TIM

→ *TIM*

Firewall

A firewall is a network component via which a secure network can be linked with an unsecure network. The task of a firewall is to control data exchange between the networks.

General request (GR)

With a general request, subscribers in a SINAUT network can request a current process image from their communications partners. This happens automatically when a disrupted connection has been restored or when a failed partner reports a restart. Apart from the automatic general request, a general request can also be triggered at any time by the user program or from the control center.

TD7onTIM does not support the general request.

GPRS

(General Packet Radio Service)

GPRS is an expansion of GSM mobile wireless that adds packet-oriented data transmission. Network connections are established over GPRS either in the Internet or in private networks. The data is transmitted using the Internet protocols TCP/IP or UDP/IP.

GPS

(Global Positioning System)

GPS is a worldwide US satellite navigation system for highly accurate location, navigation and time distribution. It operates with 24 orbiting satellites (21 operational and 3 spare satellites) on 6 satellite orbits at a height of approximately 20,000 kilometers. Each satellite contains an atomic clock whose time is transmitted continuously along with the orbit data. The GPS receiver receives data from a maximum of six satellites and calculates its position based on these values. Once the position has been calculated, the transmission time of the data from the individual satellites can be calculated. The GPS world time (UTC) is calculated in the system based on these values.

GSM

(Global System for Mobile communications)

Worldwide standard for wireless transmission of voice, data, fax and text messages (SMS). GSM-based wireless networks can be found in many countries throughout the world. A distinction is made according to frequencies: PCS 850 MHz, GSM 900 MHz, DCS 1800 MHz and PCS 1900 MHz.

Image memory / send buffer

A TIM has a send buffer and an image memory for buffering send messages.

Before it is forwarded to the communications partner, each message is entered in the send buffer. Once it has been sent, the message is cleared from the send buffer. A message is transmitted according to either the → send buffer principle or the → image memory principle. The user specifies the transmission principle during configuration of the data messages.

The storage capacity of the send buffer depends on the particular TIM type and ranges from 10 000 to 56 000 data messages.

Image memory principle

A fixed position is reserved in the image memory for each data message transferred to the TIM for transmission. Each newly transferred message always overwrites the old message in the image memory. The image memory therefore contains all data messages with their most recent content from the process.

If a send message is entered using the image memory principle, only a reference to the location of the message in the message image memory is entered. If the TIM has not yet been able to transmit the message when the same message is transferred to it again, the message is not entered in the send buffer a second time, but rather the image is simply updated.

At the time of transmission, the message is sent with its latest content from the image memory. Only then can the message be entered in the send buffer again.

Transmission using the image memory principle achieves the following:

- There is less load on transmission link, fewer messages are transmitted.
- There is less load on the send buffer of the TIM; an image memory message is entered a maximum of once in the send buffer.

See also → Image memory / send buffer

ISDN

(Integrated Services Digital Network)

ISDN integrates various services in one transmission network. ISDN networks integrate telephone, telefax, teletext, Datex-J, video phones and data transfer. This makes a wide variety of digital services available to the user: Language, texts, graphics and other data.

LAN

(Local Area Network)

Local area network.

Local data traffic is possible in the SINAUT ST7 system via the LAN types "MPI" and "Industrial Ethernet".

In SINAUT, the LAN is also used as a "WAN", for example when communication via the Internet is required or when GPRS stations transfer their data onto the Internet to a master station via a GPRS network.

Local TIM

A TIM connected to a PC (ST7cc, ST7sc) or an S7 CPU over the MPI bus, Industrial Ethernet or an IP-based network.

LTOP

(Line Transformer with Overvoltage Protection)

Copper dedicated lines are highly susceptible to electromagnetic interference. The coupling of extraneous voltages can be inductive or capacitive, for example due to the effects of lightning. Direct conductive coupling is also possible due to bad insulation.
The LTOP overvoltage protection modules limit extraneous voltage and overvoltage to a non-critical level. The floating transformer also provides electrical isolation preventing coupling of voltages into other cable sections. An LTOP protects persons and investment and is therefore an indispensable safety element in private dedicated line networks.

Main and subcycle

The sequence of the polling cycle can be structured on the master TIM by assigning individual polling stations to a main cycle or a subcycle. The subcycle is always activated at the end of the main cycle; in other words, once all stations from the main cycle have been polled, a certain, selectable number of stations are polled in the subcycle. Following this, all the stations in the main cycle are polled again.

Master TIM

WAN interface of a TIM set to the "master" function. Use in control centers and node stations.

MPI

The multipoint interface (MPI) is the programming device interface of SIMATIC S7. Devices with an MPI interface (for example a TIM), can also communicate with each other (MPI bus).

MSC protocol

The MSC protocol is a proprietary protocol and is used in SINAUT ST7 for the data exchange between TCP/IP-compliant devices in Ethernet, landline or mobile wireless networks. The MSC protocol provides an authentication mechanism and simple encryption of data. To transfer messages in IP-based WANs, the MSC protocol is linked into the protocol of SINAUT ST7.

Multimaster polling with time slots

When stations need to communicate with more than one master station in dedicated line or wireless operation, the multimaster polling with time slots mode is used. Each of the connected master stations is assigned one or more defined time slots per minute for polling. The master stations then have their turn to poll in every minute.

Node station

A node station is a station located between the master station and stations in the hierarchy of a telecontrol network. One or more subordinate stations are connected to a node station. The data traffic between these stations and the master station is handled via the node station. Direct data exchange between the node station and the subordinate stations is also possible. It is possible to have several node stations in a SINAUT network; in other words the data traffic between stations and master station can involve two or more node stations.

Node station TIM

WAN interface of a TIM in a node station set to the "node station" function.

If the TIM used in a node station has two WAN interfaces, the "station", "node station" and "master station" functions can be used in any combination on one TIM.

OPC

(OLE for Process Control)

OPC includes a series of specifications for data exchange in automation engineering between controllers, alarm transmitters etc. and control systems.

Organizational message

Organizational messages are used to execute organizational system functions.

These include, for example:

- General requests
- Time synchronization
- Counted value storage
- Coordinated connection establishment and termination in a dial-up network
- Message indicating station startup and station failure
- Requests for and transmission of subscriber records

Parameter assignment

A device is assigned the parameters it requires for starting up when it is supplied with data.

Permanent call

A permanent call does not interrupt the normal polling cycle; it is always executed alternating with the standard poll from the normal polling cycle.

PG / programming device

A PG is a personal computer designed specifically for use in industry. A PG is fully equipped for programming SIMATIC automation systems.

PG Routing

Using PG routing, it is possible to access programmable modules or modules with diagnostic capability beyond network boundaries from a programming device (PG) or computer (PC).

PLC

Programmable logic controller

Polling

Polling is a method of SINAUT data transmission in which a → master TIM controls the data exchange in the telecontrol network.

Using a polling message, the master TIM instructs the connected stations (station TIMs) one after the other to transmit their stored data messages to the master TIM. If a polled station has no stored data messages, it responds with an acknowledgment message and the polling cycle then continues by polling the next station.

A station that has stored data sends a single data message or, if block transfer was configured, several messages in a block. In the reply, the station indicates whether it still has other stored data messages. In this is the case, the station is then polled again immediately until all stored messages have been transmitted or until a selected maximum number of messages have been sent. The polling cycle then moves on to the next station.

Polling mode

→ *Polling*

Polling with time slots

The polling with time slots mode is used in a wireless network in which the use of the radio frequency assigned by the registration authorities must be shared with other users. Each user typically has 6 seconds per minute to exchange data with its stations. The frequency must then be released for other operators. During the allocated time slot, this pooling variant functions like a normal polling system.

PROFIBUS

PROFIBUS is the open, internationally standardized (EN50170) bus system for process and field communication with field devices and for data communication within an automation cell. The uses of PROFIBUS range from production and process automation to building automation.

Protocol

A protocol is a set of rules for controlled transfer of data. Protocols, for example, specify the data structure, the structure of data packets and the coding. Protocols can also specify a control mechanisms and hardware and software requirements.

Requested message

Polled messages are data messages of a station or node TIM with a special identifier indicating that they were sent in response to a general request from the master station.

RJ-12

This describes a 6-pin connecting cable with a standardized modular (Western) connector.

RJ-45

This describes a 8-pin connecting cable with a standardized modular (Western) connector.

RS-232

RS-232 is a standard for serial (i.e. bit-by bit) data transmission with +12 V and -12 V signals. RS-232 is a Recommended Standard of the Electronic Industries Association. For the RS-232 interface, 9-pin and 25-pin connections with D-sub connectors are normal. These are sub-miniature connectors with a D-shaped face.

RS-485

RS-485 is a standard for data transmission with 5 V differential signals. The RS-485 interface uses only one pair of wires and is operated in half duplex. The connection is multipoint-compliant; in other words, up to 32 subscribers can be connected.

Send buffer

→ *Image memory / send buffer*

Send buffer principle

If a send message is transmitted using the send buffer principle, each time the message is transferred to the TIM, it is entered completely in the send buffer. If such a message cannot (or should not) be transmitted immediately, it may exist more than once in the send buffer. When it is sent, the message is taken completely from the send buffer and transmitted.

See also → Image memory / send buffer

Setpoint

A setpoint is a selected digital or analog value that is transmitted once after the value has been set. The entered value is recalculated when necessary. A setpoint is always transmitted as 1 word. At the receiving end, the setpoint can either the output directly to the process as an analog signal (for example to an external controller) or the value is made available to the local program for further processing (setpoint for internal controller, limit value, threshold value etc.).

Setpoint and command input are interlocked for safety reasons; in other words, a setpoint input cannot be made at the same time as a command input. In this case, the acquisition program recognizes an error. Neither the setpoint nor the command are transmitted.

SIM card

(Subscriber Identity Module)

The SIM card is an identification card for a subscriber of a GSM mobile wireless network.

SIMATIC S7

Siemens automation system

Simple Internet communication

In SINAUT ST7, simple Internet communication means data exchange between TCP/IP-compliant devices in Ethernet, landline or mobile wireless networks using the → MSC protocol.

SINAUT

(SIemens Network AUTomation)

Station control system or telecontrol system based on SIMATIC S7

SINAUT message

An ST7 message contains the data of an ST7 object for transmission. Depending on the object type, a message can contain either all data of an ST7 object or only a contiguous subarea of the object data.

SINAUT object

A SINAUT object contains the data of one or more process variables such as analog values, commands, calculated values, status information on motors, sliders etc. An ST7 object has type-specific processing functions and change checks assigned to it to minimize the communication traffic in the WAN. Type-specific processing functions include, for example, threshold checks or mean value calculation with the object type for analog values. The change check is designed so that a message is generated only when the object data has changed compared with the last time its value was transferred or when the type-specific processing enables generation of a message because the object data is "worth" transferring.

SINAUT ST7 protocol

This protocol is used in the SINAUT ST7 system for data transmission via classic WAN networks and IP-based networks. It is a further development of the SINAUT ST1 protocol.

SINAUT TD7 Library

The SINAUT TD7 library is a software package with blocks for the CPU. The package can be run both on an S7-300 or an S7-400 CPU (except the S7-400H CPUs). There are only a few blocks intended specifically for the S7-300 or S7-400 CPUs.

The SINAUT TD7 software in the stations allows change-driven transmission of process data between the individual CPUs and the control center, for example ST7cc. Failure of connections, CPUs, or the control center are displayed. Once a problem has been corrected or the CPUs or control center have started up, data is updated automatically. When necessary, data messages can be given a time stamp.

There are two variants of the SINAUT TD7 software package:

- TD7onCPU

  Library with SINAUT blocks that are linked into the program of the CPU and are executed there. The library can be used with all TIM types and is suitable for all S7-300 and S7-400 CPUs (except the S7-400H CPUs).

- TD7onTIM

  SINAUT TD7onTIM is the TD7 variant that runs on the TIM. It is available for the → Ethernet TIMs and can only be used in an S7-300 station. TD7onTIM and TD7onCPU can only be used as alternatives in a station. Simultaneous use is not possible.

SINAUT TD7onCPU

→ *SINAUT TD7 Library*

SINAUT TD7onTIM

→ *SINAUT TD7 Library*

SMS

(Short Message Service)

The short message service in the GSM standard is used to transfer short text messages to mobile wireless users.

When the short messages are transferred, they are first transferred to the SMS center (SMSC) using a store-and-forward technique. They are buffered there and then forwarded to the recipient. The sender can query the status of the message in the SMS center or can request acknowledgment of delivery.

SMSC

Short Message Service Center

Spontaneous message

In SINAUT networks, messages are always transmitted spontaneously; in other words, messages are created and transmitted only when changes to process values occur or event-driven. These messages are known as spontaneous messages.

See also → "Conditional spontaneous message" and → "Unconditional spontaneous message"

Spontaneous mode

The spontaneous mode is a method of SINAUT data transmission in which subscribers can exchange data among themselves directly. Here, no central entity is necessary in the form of a master TIM as in polling mode (see "Polling mode"). The spontaneous mode is intended for data transmission in dial-up networks and for communication via IP-based networks.

For transmission in a dial-up network and in pay-by-volume/time IP-based networks (for example GPRS), the data to be sent is assigned different priorities during parameter assignment ("high" or "normal", with TD7onTIM also "alarm"). When data with high or alarm priority are ready for transmission, the dial-up connection is established immediately. If the data has "normal" priority, it is first stored on the TIM. This data is then sent the next time a connection is established to the partner for whatever reason. This can, for example, be the situation when information with higher priority needs to be sent or when the partner establishes a connection to exchange data.

Squelch

Squelch

Squelch reduces the interfering noise in communications during breaks in transmission. This increases the signal-to-noise ratio.

ST7 message

ST7 messages consist of a frame, an area for addresses and control fields (message header) and an area for net data (object data) with the time stamp. The ST7 messages are divided into organizational messages and data messages. The structure of an ST7 message is based on the guidelines of the ST7 protocol.

ST7 protocol

This protocol is used in the SINAUT ST7 system for transmitting process data over WANs.

ST7cc

SINAUT ST7cc is the ideal control center system based on SIMATIC WinCC for SINAUT ST7.
It is specially designed for event-driven and time-stamped data transmission in the SINAUT system. It avoids the possible loss of data that can occur with cyclic polling in WinCC. It also ensures the use of the correct event time supplied by the SINAUT stations for all WinCC messages and archive entries. The integrated process image contains all process data as well as the status of all SINAUT subscribers in the network and makes this data available directly to WinCC for fast transfer to the process image.

ST7sc

The SINAUT system allows the networking of SIMATIC stations with a control center over a WAN (Wide Area Network). This control center can also be a SIMATIC station or a PC-based control center, for example, WinCC with the SINAUT ST7cc add-on.

SINAUT ST7sc allows the manufacturers of control systems to connect to SINAUT without needing to integrate a SINAUT interface. Communication is over OPC: As an OPC server, SINAUT ST7sc forms the interface between the SINAUT system and a control system connected as an OPC client.

The OPC interface is also suitable for data exchange with other applications, for example, the Microsoft Office application Excel.

Station

In the SINAUT world, the term station includes the entire hardware components required for acquisition, processing and communication with other stations or a master station. A station can, for example, consist of a modem, a TIM and a programmable controller (in turn consisting of a CPU and I/O modules). A SINAUT station can also include several programmable controllers, or, in the case of a node station, several TIMs.

Station TIM

WAN interface of a TIM set to the "station" function. Use in stations.

Status message

A status message is a process status (for example pump on, valve open) or alarm (for example limit value exceeded). This is binary information with the possible values 0 or 1. Eight status messages are put together to form one byte.

TCP/IP

(Transmission Control Protocol / Internet Protocol)

Network protocols for connecting two computers in the Internet. IP is the basic protocol. UDP is based on IP and sends individual packets. These can arrive at the recipient in a different order from the order in which they were sent - they can even be lost. TCP is used to make the connection reliable and makes sure, for example, that data packets are passed on to the application in the correct order. In addition to the IP addresses, UDP and TCP also involve port numbers between 1 and 65535 with which the various services can be distinguished.

On a Windows PC, the WINSOCK.DLL (or WSOCK32.DLL) is responsible for handling the two protocols.

TD7, TD7onCPU, TD7onTIM

→ *SINAUT TD7 Library*

TIM

(Telecontrol Interface Module)

The TIM transmission processor is a communications module that handles all data transmission functions provided by the SINAUT system independently. Depending on the type, the TIM has one or two WAN interfaces, an MPI interface or an Ethernet interface. Depending on the requirements, a variety of transmission equipment can be connected. The module is supplied in an S7-300 housing.

The TIM is available in two basic variants:

- TIM 4

  TIM 4R / TIM 4RD with MPI port both for installation as a CP in an S7-300 and as a stand-alone device for connection over MPI to one or more S7-400 and S7-300 PLCs. The TIM 4R / TIM 4RD has two WAN ports via serial interfaces for external modems. The two WANs can be identical or different, for example dedicated line plus telephone network.

  The TIM 4 series also includes the older modules TIM 42/42D, TIM 43/43D, TIM 44/44D and TIM 4V/4VD, see release 05/2007 of the manual (http://support.automation.siemens.com/WW/view/en/22548697).

- Ethernet TIM

  – TIM 3V-IE variants with two WAN attachments: An RS-232 port and an RJ-45 Ethernet port, only for installation as a CP in S7-300. With the TIM 3V-IE, SINAUT communication is either over the RS-232 or over the Ethernet port. The TIM 3V-IE Advanced can use the RS-232 port at the same time as the Ethernet port.

  – TIM 4R-IE with four WAN connections: Two RS-232 interfaces and two RJ-45 Ethernet interfaces. Installation as a CP in an S7-300 or as standalone device in a separate TIM rack. With the TIM 4R-IE, SINAUT communication is handled over the RS-232 and over the Ethernet interfaces simultaneously.

The TIM 3 series includes the older modules TIM 3V, TIM 32, TIM 33 and TIM 34, see release 05/2007 of the manual (http://support.automation.siemens.com/WW/view/en/22548697).

Topology

The topology describes the network structure. It specifies how a network (transmission medium and connectable devices or computers) is interconnected. Possible structures are linear (bus), star, ring, redundant ring and tree structure.

Unconditional spontaneous message

In the dial-up network, you can specify whether or not a change causes an "conditional spontaneous" or "unconditional spontaneous" transmission for each individual message.

Unconditional spontaneous messages cause the connection to be established immediately. Even with pay-by-volume/time transmission in a GPRS network, you can use the message prioritization "unconditional spontaneous"; in other words, in contrast to a "conditional spontaneous" message, a message is transmitted immediately.

See also → "conditional spontaneous message" and → "spontaneous message"

VPN

(Virtual Private Network)

Technology for secure transportation of confidential data in public IP networks, for example Internet.

WAN

(Wide Area Network)

Data network with a large geographical span, such as the Internet. telephone or enterprise networks.

The following WANs can be used with SINAUT:

- Classic WAN networks

  SINAUT communication is possible via the following networks:

  – Private or leased dedicated lines
  – Analog telephone network
  – Digital ISDN network
  – Private wireless networks (directional or omnidirectional wireless and private mobile wireless with time slots)
  – Mobile wireless network

  A classic WAN is connected via suitable transmission device (modem) to a serial interface of the TIM.

- IP-based WAN networks

  SINAUT communication is possible via the following IP-based networks:

  – Over wireless by using special wireless systems optimized for Ethernet, for example, the components of a SCALANCE W IWLAN system
  – Via fiber-optic cable, for example in conjunction with SCALANCE X switches with optical ports. This allows distances of up to 70 km to be covered.
  – Over public networks and Internet with DSL or GPRS
  – Private wideband systems such as OTN, PCM30 etc.

  An IP-based WAN is normally connected to an RJ-45 interface of an Ethernet TIM via an Ethernet-compliant module (see section "Installation guidelines").

  To allow use of GPRS, the serial interface of a station TIM 3V-IE can be connected to a GSM network via the GSM modem MD720-3. This requires the MSC protocol to be enabled in the STEP 7 > Properties dialog of the TIM > "Interfaces" tab. The WAN interface then behaves like an Ethernet interface.

Index

A

Ambient temperature
  MD modem, 283
  TIM, 97, 169
ANT794-4MR GSM/GPRS antenna, 48
ATEX, 165, 187, 292

C

CE mark, 285
Certification, 285
Configuration PC
  Operating systems, 4
  STEP 7 version, 4
Configuration software, 172
Configurations
  with TIM 3V-IE variants, 101
  with TIM 4, 124
  with TIM 4R-IE, 110, 117
Configuring a TIM, 172
Connecting cables, 63, 136, 145, 153
Current consumption, 99
Current information, 6

D

DCF77 radio clock, 55
Dedicated line mode
  MD3 modem, 248
Default startup, 181
Default startup, automatic, 182
Dimensions for installation, 98, 169, 283
Downloading SDBs, 176

E

EDGE, 46
EGPRS, 46
Ex Zone 2, 292

F

FAQs, 6

G

GPRS, 46
GPS receiver, 57

H

Hazardous area, 165, 186
HW Config, 172

I

Installation guide
  General, 97, 168
  MD modem, 282
  TIM 3 / TIM 4, 119
  TIM 3V-IE variants, 101
  TIM 4, 123
  TIM 4R-IE, 108, 116

L

LED display
  MD3 modem (hardware ≥ 4), 236
  MD4 modem, 269
  Modem MD2, 199
  Modem MD720-3, 188
  TIM 3V-IE, 133
  TIM 3V-IE Adv, 133
  TIM 4, 151
  TIM 4R-IE, 142
LTOP, 53, 227

M

Manuals, 6
MD 3 attenuation values, 263
MD modem, 37
MD2 attenuation values, 224
MD2 freqencies, 224
MD2 range, 224
MD2 terminating resistors, 212
MD2 transmission speeds, 224
MD2 voltage and level values, 226
MD720-3, 44

MD740-1, 46
MD741-1, 46
MP3 range, 263

N

NetPro, 174

O

Operating systems, 4
Options for attachment and settings
  MD3 modem (hardware ≥ 4), 238, 252
  MD4 modem, 270, 277
  MD741-1, 193
  Modem MD2, 200, 211
  Modem MD720-3, 188
  TIM 4R / 4RD, 160
Ordering data
  ANT794-4MR antenna, 48
  Connecting cables, 63
  LTOP, 54
  Modems, 38
  SINAUT ST7 software, 73
  SINAUT ST7cc, 79
  SINAUT ST7sc, 85
  TIM, 16

P

Parameter assignment
  Network nodes, 174
  Networks, 174
  SINAUT connections, 175
  TIM, 173
Power loss, 99
Power supply, 170, 283

R

Radio clock components
  DCF77 / GPS, 59

S

Safety notices, 164, 185
Service & Support, 6
SINAUT ST7 software package, 65
SINAUT ST7cc, 75
SINAUT ST7sc, 80
Standards, 285
STEP 7 version, 4
Structure
  LTOP, 227
  MD3 modem (hardware ≥ 4), 235
  MD4 modem, 268
  Modem MD2, 198
  TIM 3V-IE, 132
  TIM 3V-IE Adv, 132
  TIM 4, 149
  TIM 4R-IE, 140

T

Technical specifications
  ANT794-4MR GSM/GPRS antenna, 52
  DCF77 antennas, 60
  GPS receiver, 61
  GSM router MD720-3, 49
  LTOP, 54
  MD3 modem, 40
  MD4 modem, 42
  MD741-1 GPRS modem, 50
  Modem MD2, 39
  SINAUT ST7cc, 80
  SINAUT ST7sc, 86
  TIM 3V-IE, 20
  TIM 3V-IE Advanced, 22
  TIM 4R / 4RD, 34
  TIM 4R-IE, 28
Test specifications, 285
TIM 3V-IE, 17
TIM 4, 31
TIM 4R-IE, 25
Training, 6

V

Version history (manual), 7