SIEMENS

Operating Instructions

SINAMICS

V20

Edition 06/2018

www.siemens.com/drives

SIEMENS

SINAMICS

SINAMICS V20 Inverter

Operating Instructions

Preface

Fundamental safety instructions 1

Introduction 2

Mechanical installation 3

Electrical installation 4

Commissioning via the built-in BOP 5

Commissioning using SINAMICS V20 Smart Access 6

Communicating with the PLC 7

Parameter list 8

Faults and alarms 9

Technical specifications A

Options and spare parts B

General license conditions C

06/2018

A5E34559884-010

Legal information

Warning notice system

This manual contains notices you have to observe in order to ensure your personal safety, as well as to prevent damage to property. The notices referring to your personal safety are highlighted in the manual by a safety alert symbol, notices referring only to property damage have no safety alert symbol. These notices shown below are graded according to the degree of danger.

⚠DANGER

indicates that death or severe personal injury **will** result if proper precautions are not taken.

⚠WARNING

indicates that death or severe personal injury **may** result if proper precautions are not taken.

⚠CAUTION

indicates that minor personal injury can result if proper precautions are not taken.

NOTICE

indicates that property damage can result if proper precautions are not taken.

If more than one degree of danger is present, the warning notice representing the highest degree of danger will be used. A notice warning of injury to persons with a safety alert symbol may also include a warning relating to property damage.

Qualified Personnel

The product/system described in this documentation may be operated only by **personnel qualified** for the specific task in accordance with the relevant documentation, in particular its warning notices and safety instructions. Qualified personnel are those who, based on their training and experience, are capable of identifying risks and avoiding potential hazards when working with these products/systems.

Proper use of Siemens products

Note the following:

⚠WARNING

Siemens products may only be used for the applications described in the catalog and in the relevant technical documentation. If products and components from other manufacturers are used, these must be recommended or approved by Siemens. Proper transport, storage, installation, assembly, commissioning, operation and maintenance are required to ensure that the products operate safely and without any problems. The permissible ambient conditions must be complied with. The information in the relevant documentation must be observed.

Trademarks

All names identified by ® are registered trademarks of Siemens AG. The remaining trademarks in this publication may be trademarks whose use by third parties for their own purposes could violate the rights of the owner.

Disclaimer of Liability

We have reviewed the contents of this publication to ensure consistency with the hardware and software described. Since variance cannot be precluded entirely, we cannot guarantee full consistency. However, the information in this publication is reviewed regularly and any necessary corrections are included in subsequent editions.

Siemens AG
Division Digital Factory
Postfach 48 48
90026 NÜRNBERG
GERMANY

A5E34559884-010
℗ 06/2018 Subject to change

Copyright © Siemens AG 2014 - 2018.
All rights reserved

Preface

Purpose of this manual

This manual provides you with information about the proper installation, commissioning, operation, and maintenance of SINAMICS V20 inverters.

SINAMICS V20 user documentation components

Document	Content	Available languages
Operating Instructions	(this manual)	English Chinese French German Italian Korean Portuguese Spanish
Compact Operating Instructions	Describes how you install, operate, and perform basic commissioning of the SINAMICS V20 inverter	English Chinese
Product Information	Describes how you install and operate the following options or spare parts: • Parameter Loaders • Dynamic Braking Modules • External Basic Operator Panels (BOPs) • BOP Interface Modules • Migration mounting kit • Shield Connection Kits • SINAMICS V20 Smart Access • I/O Extension Module • Replacement Fans	English Chinese Turkish (for SINAMICS V20 Smart Access only)

Product maintenance

The components are subject to continuous further development within the scope of product maintenance (improvements to robustness, discontinuations of components, etc).

These further developments are "spare parts-compatible" and do not change the article number.

In the scope of such spare parts-compatible further developments, connector positions are sometimes changed slightly. This does not cause any problems with proper use of the components. Please take this fact into consideration in special installation situations (e.g. allow sufficient clearance for the cable length).

Use of third-party products

This document contains recommendations relating to third-party products. Siemens accepts the fundamental suitability of these third-party products.

You can use equivalent products from other manufacturers.

Siemens does not accept any warranty for the properties of third-party products.

Environmental protection



Waste electrical products cannot be disposed of with household waste. Recycle where facilities exist. Check with your local authority or retailer for recycling advice.

Technical support

Country	Hotline
China	+86 400 810 4288
France	+33 0821 801 122
Germany	+49 (0) 911 895 7222
Italy	+39 (02) 24362000
Brazil	+55 11 3833 4040
India	+91 22 2760 0150
Korea	+82 2 3450 7114
Turkey	+90 (216) 4440747
United States of America	+1 423 262 5710
Poland	+48 22 870 8200
Further service contact information: Support contacts (https://support.industry.siemens.com/cs/ww/en/ps)	

Table of contents

Preface **3**

1 Fundamental safety instructions **9**

1.1 General safety instructions 9

1.2 Equipment damage due to electric fields or electrostatic discharge 14

1.3 Warranty and liability for application examples 14

1.4 Industrial security 15

1.5 Residual risks of power drive systems 16

2 Introduction **17**

2.1 Components of the inverter system 17

2.2 Inverter rating plate 19

3 Mechanical installation **21**

3.1 Mounting orientation and clearance 21

3.2 Cabinet panel mounting 22

3.3 SINAMICS V20 Flat Plate variant 25

3.4 Push-through mounting (frame sizes B ... E) 27

3.5 DIN rail mounting (frame sizes AA ... B) 30

4 Electrical installation **33**

4.1 Typical system connections 34

4.2 Terminal description 39

4.3 EMC-compliant installation 45

4.4 EMC-compliant cabinet design 48

5 Commissioning via the built-in BOP **51**

5.1 The built-in Basic Operator Panel (BOP) 51

5.1.1 Introduction to the built-in BOP 51

5.1.2 Inverter menu structure 53

5.1.3 Viewing inverter status 55

5.1.4 Editing parameters 56

5.1.5 Screen displays 58

5.1.6 LED states 59

5.2 Checking before power-on 60

5.3 Setting the 50/60 Hz selection menu 60

5.4 Starting the motor for test run 61

5.5 Quick commissioning 62

5.5.1 Quick commissioning through the setup menu ... 62
5.5.1.1 Structure of the setup menu ... 62
5.5.1.2 Setting motor data ... 63
5.5.1.3 Setting connection macros ... 65
5.5.1.4 Setting application macros ... 76
5.5.1.5 Setting common parameters ... 78
5.5.2 Quick commissioning through the parameter menu ... 79

5.6 Function commissioning ... 83
5.6.1 Overview of inverter functions ... 83
5.6.2 Commissioning basic functions ... 85
5.6.2.1 Selecting the stop mode ... 85
5.6.2.2 Running the inverter in JOG mode ... 87
5.6.2.3 Setting the voltage boost ... 89
5.6.2.4 Setting the PID controller ... 91
5.6.2.5 Setting the braking function ... 93
5.6.2.6 Setting the ramp time ... 102
5.6.2.7 Setting the Imax controller ... 104
5.6.2.8 Setting the Vdc controller ... 105
5.6.2.9 Setting the load torque monitoring function ... 106
5.6.3 Commissioning advanced functions ... 108
5.6.3.1 Starting the motor in super torque mode ... 108
5.6.3.2 Starting the motor in hammer start mode ... 109
5.6.3.3 Starting the motor in blockage clearing mode ... 111
5.6.3.4 Running the inverter in economy mode ... 113
5.6.3.5 Setting the UL508C/UL61800-5-1-compliant motor overtemperature protection ... 114
5.6.3.6 Setting the free function blocks (FFBs) ... 115
5.6.3.7 Setting the flying start function ... 116
5.6.3.8 Setting the automatic restart function ... 117
5.6.3.9 Running the inverter in frost protection mode ... 118
5.6.3.10 Running the inverter in condensation protection mode ... 119
5.6.3.11 Running the inverter in sleep mode ... 120
5.6.3.12 Setting the wobble generator ... 122
5.6.3.13 Running the inverter in motor staging mode ... 123
5.6.3.14 Running the inverter in cavitation protection mode ... 126
5.6.3.15 Setting the user default parameter set ... 127
5.6.3.16 Setting the dual ramp function ... 128
5.6.3.17 Setting the DC coupling function ... 129
5.6.3.18 Setting high/low overload (HO/LO) mode ... 132

5.7 Restoring to defaults ... 133

6 Commissioning using SINAMICS V20 Smart Access ... 135

6.1 System requirements ... 136

6.2 Accessing the SINAMICS V20 Web pages ... 136
6.2.1 Overview of the steps ... 136
6.2.2 Fitting SINAMICS V20 Smart Access to the inverter ... 137
6.2.3 Establishing the wireless network connection ... 137
6.2.4 Accessing the Web pages ... 139

6.3 Overview of the Web pages ... 140

6.4 View connection status ... 141

6.5 Viewing inverter information 141
6.6 Making optional Web access settings 142
6.6.1 Configuring Wi-Fi 142
6.6.2 Changing the display language 144
6.6.3 Synchronizing the time 144
6.6.4 Upgrading 144
6.6.5 Viewing additional information 145
6.7 Quick commissioning 145
6.8 Setting parameters 150
6.9 Starting motor test run (JOG/HAND) 155
6.10 Monitoring 157
6.11 Diagnosing 157
6.12 Backing up and restoring 160
6.12.1 Backing up 160
6.12.2 Restoring 162
6.13 Upgrading Web application and SINAMICS V20 Smart Access firmware versions 164
6.14 Viewing the support information 167
7 Communicating with the PLC 169
7.1 USS communication 169
7.2 MODBUS communication 173
8 Parameter list 183
8.1 Introduction to parameters 183
8.2 Parameter list 187
9 Faults and alarms 323
9.1 Faults 323
9.2 Alarms 331
A Technical specifications 335
B Options and spare parts 345
B.1 Options 345
B.1.1 Parameter Loader 345
B.1.2 External BOP and BOP Interface Module 350
B.1.3 Dynamic braking module 355
B.1.4 Braking resistor 358
B.1.5 Line reactor 362
B.1.6 Output reactor 367
B.1.7 External line filter Class B 372
B.1.8 Shield connection kits 377
B.1.9 Memory card 381
B.1.10 RS485 termination resistor 381
B.1.11 Residual current circuit breaker (RCCB) 382
B.1.12 DIN rail mounting kits (only for FSAA ... FSB) 383
B.1.13 Migration mounting kit for FSAA ... FSAC 383

B.1.14 SINAMICS V20 Smart Access 386
B.1.15 I/O Extension Module 389
B.1.16 User documentation 390
B.2 Spare parts - replacement fans 390
C General license conditions 395
Index 401

Fundamental safety instructions

1

1.1 General safety instructions



⚠ WARNING

Electric shock and danger to life due to other energy sources

Touching live components can result in death or severe injury.

- Only work on electrical devices when you are qualified for this job.
- Always observe the country-specific safety rules.

Generally, the following six steps apply when establishing safety:

1. Prepare for disconnection. Notify all those who will be affected by the procedure.
2. Isolate the drive system from the power supply and take measures to prevent it being switched back on again.
3. Wait until the discharge time specified on the warning labels has elapsed.
4. Check that there is no voltage between any of the power connections, and between any of the power connections and the protective conductor connection.
5. Check whether the existing auxiliary supply circuits are de-energized.
6. Ensure that the motors cannot move.
7. Identify all other dangerous energy sources, e.g. compressed air, hydraulic systems, or water. Switch the energy sources to a safe state.
8. Check that the correct drive system is completely locked.

After you have completed the work, restore the operational readiness in the inverse sequence.



⚠ WARNING

Risk of electric shock and fire from supply networks with an excessively high impedance

Excessively low short-circuit currents can lead to the protective devices not tripping or tripping too late, and thus causing electric shock or a fire.

- In the case of a conductor-conductor or conductor-ground short-circuit, ensure that the short-circuit current at the point where the inverter is connected to the line supply at least meets the minimum requirements for the response of the protective device used.
- You must use an additional residual-current device (RCD) if a conductor-ground short circuit does not reach the short-circuit current required for the protective device to respond. The required short-circuit current can be too low, especially for TT supply systems.



WARNING

Risk of electric shock and fire from supply networks with an excessively low impedance

Excessively high short-circuit currents can lead to the protective devices not being able to interrupt these short-circuit currents and being destroyed, and thus causing electric shock or a fire.

- Ensure that the prospective short-circuit current at the line terminal of the inverter does not exceed the breaking capacity (SCCR or Icc) of the protective device used.



WARNING

Electric shock if there is no ground connection

For missing or incorrectly implemented protective conductor connection for devices with protection class I, high voltages can be present at open, exposed parts, which when touched, can result in death or severe injury.

- Ground the device in compliance with the applicable regulations.



WARNING

Electric shock due to connection to an unsuitable power supply

When equipment is connected to an unsuitable power supply, exposed components may carry a hazardous voltage that might result in serious injury or death.

- Only use power supplies that provide SELV (Safety Extra Low Voltage) or PELV-(Protective Extra Low Voltage) output voltages for all connections and terminals of the electronics modules.



WARNING

Electric shock due to equipment damage

Improper handling may cause damage to equipment. For damaged devices, hazardous voltages can be present at the enclosure or at exposed components; if touched, this can result in death or severe injury.

- Ensure compliance with the limit values specified in the technical data during transport, storage and operation.
- Do not use any damaged devices.



WARNING

Electric shock due to unconnected cable shield

Hazardous touch voltages can occur through capacitive cross-coupling due to unconnected cable shields.

- As a minimum, connect cable shields and the conductors of power cables that are not used (e.g. brake cores) at one end at the grounded housing potential.



⚠WARNING

Arcing when a plug connection is opened during operation

Opening a plug connection when a system is operation can result in arcing that may cause serious injury or death.

- Only open plug connections when the equipment is in a voltage-free state, unless it has been explicitly stated that they can be opened in operation.



⚠WARNING

Electric shock due to residual charges in power components

Because of the capacitors, a hazardous voltage is present for up to 5 minutes after the power supply has been switched off. Contact with live parts can result in death or serious injury.

- Wait for 5 minutes before you check that the unit really is in a no-voltage condition and start work.

NOTICE

Property damage due to loose power connections

Insufficient tightening torques or vibration can result in loose power connections. This can result in damage due to fire, device defects or malfunctions.

- Tighten all power connections to the prescribed torque.
- Check all power connections at regular intervals, particularly after equipment has been transported.

⚠WARNING

Spread of fire from built-in devices

In the event of fire outbreak, the enclosures of built-in devices cannot prevent the escape of fire and smoke. This can result in serious personal injury or property damage.

- Install built-in units in a suitable metal cabinet in such a way that personnel are protected against fire and smoke, or take other appropriate measures to protect personnel.
- Ensure that smoke can only escape via controlled and monitored paths.

⚠WARNING

Active implant malfunctions due to electromagnetic fields

Inverters generate electromagnetic fields (EMF) in operation. People with active implants in the immediate vicinity of this equipment are at particular risk.

- As the operator of an EMF-emitting installation, assess the individual risks of persons with active implants. The following clearances are usually adequate:
  - No clearance to closed control cabinets and shielded MOTION-CONNECT supply cables
  - Forearm length (approx. 35 cm clearance) to distributed drive systems and open control cabinets

WARNING

Unexpected movement of machines caused by radio devices or mobile phones

When radio devices or mobile phones with a transmission power > 1 W are used in the immediate vicinity of components, they may cause the equipment to malfunction. Malfunctions may impair the functional safety of machines and can therefore put people in danger or lead to property damage.

- If you come closer than around 2 m to such components, switch off any radios or mobile phones.
- Use the "SIEMENS Industry Online Support app" only on equipment that has already been switched off.

NOTICE

Damage to motor insulation due to excessive voltages

When operated on systems with grounded line conductor or in the event of a ground fault in the IT system, the motor insulation can be damaged by the higher voltage to ground. If you use motors that have insulation that is not designed for operation with grounded line conductors, you must perform the following measures:

- IT system: Use a ground fault monitor and eliminate the fault as quickly as possible.
- TN or TT systems with grounded line conductor: Use an isolating transformer on the line side.

WARNING

Fire due to inadequate ventilation clearances

Inadequate ventilation clearances can cause overheating of components with subsequent fire and smoke. This can cause severe injury or even death. This can also result in increased downtime and reduced service lives for devices/systems.

- Ensure compliance with the specified minimum clearance as ventilation clearance for the respective component.

WARNING

Unrecognized dangers due to missing or illegible warning labels

Dangers might not be recognized if warning labels are missing or illegible. Unrecognized dangers may cause accidents resulting in serious injury or death.

- Check that the warning labels are complete based on the documentation.
- Attach any missing warning labels to the components, where necessary in the national language.
- Replace illegible warning labels.

NOTICE

Device damage caused by incorrect voltage/insulation tests

Incorrect voltage/insulation tests can damage the device.

- Before carrying out a voltage/insulation check of the system/machine, disconnect the devices as all converters and motors have been subject to a high voltage test by the manufacturer, and therefore it is not necessary to perform an additional test within the system/machine.

⚠ WARNING

Unexpected movement of machines caused by inactive safety functions

Inactive or non-adapted safety functions can trigger unexpected machine movements that may result in serious injury or death.

- Observe the information in the appropriate product documentation before commissioning.
- Carry out a safety inspection for functions relevant to safety on the entire system, including all safety-related components.
- Ensure that the safety functions used in your drives and automation tasks are adjusted and activated through appropriate parameterizing.
- Perform a function test.
- Only put your plant into live operation once you have guaranteed that the functions relevant to safety are running correctly.

Note

Important safety notices for Safety Integrated functions

If you want to use Safety Integrated functions, you must observe the safety notices in the Safety Integrated manuals.

⚠ WARNING

Malfunctions of the machine as a result of incorrect or changed parameter settings

As a result of incorrect or changed parameterization, machines can malfunction, which in turn can lead to injuries or death.

- Protect the parameterization (parameter assignments) against unauthorized access.
- Handle possible malfunctions by taking suitable measures, e.g. emergency stop or emergency off.

1.2 Equipment damage due to electric fields or electrostatic discharge

Electrostatic sensitive devices (ESD) are individual components, integrated circuits, modules or devices that may be damaged by either electric fields or electrostatic discharge.



NOTICE

Equipment damage due to electric fields or electrostatic discharge

Electric fields or electrostatic discharge can cause malfunctions through damaged individual components, integrated circuits, modules or devices.

- Only pack, store, transport and send electronic components, modules or devices in their original packaging or in other suitable materials, e.g conductive foam rubber of aluminum foil.
- Only touch components, modules and devices when you are grounded by one of the following methods:
  - Wearing an ESD wrist strap
  - Wearing ESD shoes or ESD grounding straps in ESD areas with conductive flooring
- Only place electronic components, modules or devices on conductive surfaces (table with ESD surface, conductive ESD foam, ESD packaging, ESD transport container).

1.3 Warranty and liability for application examples

Application examples are not binding and do not claim to be complete regarding configuration, equipment or any eventuality which may arise. Application examples do not represent specific customer solutions, but are only intended to provide support for typical tasks.

As the user you yourself are responsible for ensuring that the products described are operated correctly. Application examples do not relieve you of your responsibility for safe handling when using, installing, operating and maintaining the equipment.

1.4 Industrial security

Note

Industrial security

Siemens provides products and solutions with industrial security functions that support the secure operation of plants, systems, machines and networks.

In order to protect plants, systems, machines and networks against cyber threats, it is necessary to implement – and continuously maintain – a holistic, state-of-the-art industrial security concept. Siemens' products and solutions constitute one element of such a concept.

Customers are responsible for preventing unauthorized access to their plants, systems, machines and networks. Such systems, machines and components should only be connected to an enterprise network or the Internet if and to the extent such a connection is necessary and only when appropriate security measures (e.g. firewalls and/or network segmentation) are in place.

For additional information on industrial security measures that may be implemented, please visit:

Industrial security (http://www.siemens.com/industrialsecurity)

Siemens' products and solutions undergo continuous development to make them more secure. Siemens strongly recommends that product updates are applied as soon as they are available and that the latest product versions are used. Use of product versions that are no longer supported, and failure to apply the latest updates may increase customer's exposure to cyber threats.

To stay informed about product updates, subscribe to the Siemens Industrial Security RSS Feed at:

Industrial security (http://www.siemens.com/industrialsecurity)

Further information is provided on the Internet:

Industrial Security Configuration Manual
(https://support.industry.siemens.com/cs/ww/en/view/108862708)

⚠ WARNING

Unsafe operating states resulting from software manipulation

Software manipulations (e.g. viruses, trojans, malware or worms) can cause unsafe operating states in your system that may lead to death, serious injury, and property damage.

- Keep the software up to date.
- Incorporate the automation and drive components into a holistic, state-of-the-art industrial security concept for the installation or machine.
- Make sure that you include all installed products into the holistic industrial security concept.
- Protect files stored on exchangeable storage media from malicious software by with suitable protection measures, e.g. virus scanners.
- Protect the drive against unauthorized changes by activating the "know-how protection" drive function.

1.5 Residual risks of power drive systems

When assessing the machine- or system-related risk in accordance with the respective local regulations (e.g., EC Machinery Directive), the machine manufacturer or system installer must take into account the following residual risks emanating from the control and drive components of a drive system:

1. Unintentional movements of driven machine or system components during commissioning, operation, maintenance, and repairs caused by, for example,
   - Hardware and/or software errors in the sensors, control system, actuators, and cables and connections
   - Response times of the control system and of the drive
   - Operation and/or environmental conditions outside the specification
   - Condensation/conductive contamination
   - Parameterization, programming, cabling, and installation errors
   - Use of wireless devices/mobile phones in the immediate vicinity of electronic components
   - External influences/damage
   - X-ray, ionizing radiation and cosmic radiation
2. Unusually high temperatures, including open flames, as well as emissions of light, noise, particles, gases, etc., can occur inside and outside the components under fault conditions caused by, for example:
   - Component failure
   - Software errors
   - Operation and/or environmental conditions outside the specification
   - External influences/damage
3. Hazardous shock voltages caused by, for example:
   - Component failure
   - Influence during electrostatic charging
   - Induction of voltages in moving motors
   - Operation and/or environmental conditions outside the specification
   - Condensation/conductive contamination
   - External influences/damage
4. Electrical, magnetic and electromagnetic fields generated in operation that can pose a risk to people with a pacemaker, implants or metal replacement joints, etc., if they are too close
5. Release of environmental pollutants or emissions as a result of improper operation of the system and/or failure to dispose of components safely and correctly
6. Influence of network-connected communication systems, e.g. ripple-control transmitters or data communication via the network

For more information about the residual risks of the drive system components, see the relevant sections in the technical user documentation.

Introduction

2

2.1 Components of the inverter system

The SINAMICS V20 is a range of inverters designed for controlling the speed of three phase asynchronous motors.

Three phase AC 400 V variants

The three phase AC 400 V inverters are available in five frame sizes.

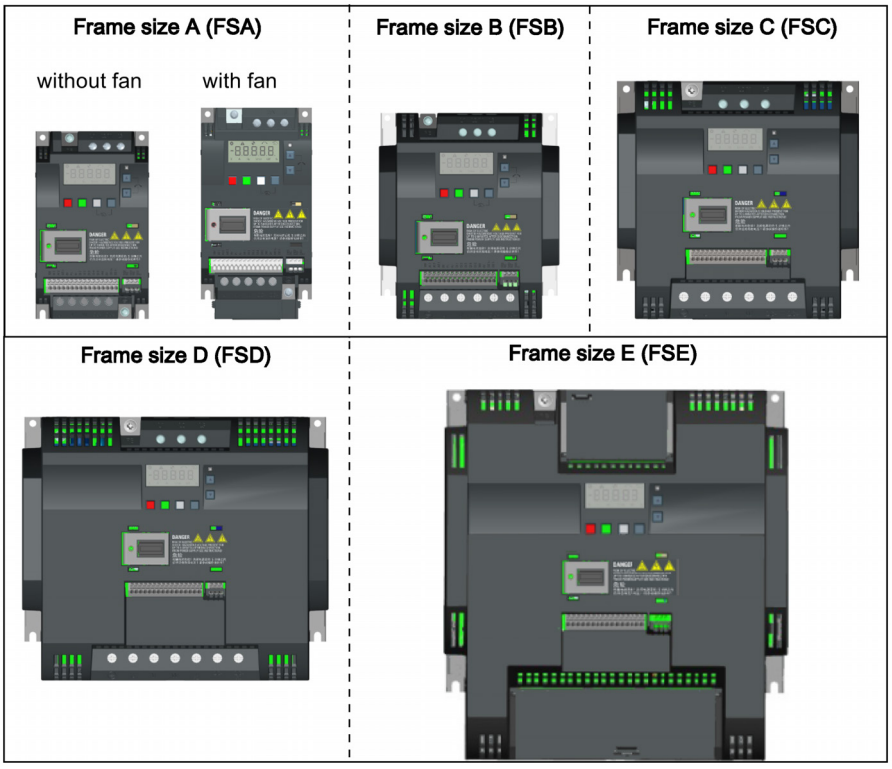

Component	Rated output power	Rated input current	Rated output current	Output current at 480 V at 4kHz/40°C	Article number	
					unfiltered	filtered
FSA (without fan)	0.37 kW	1.7 A	1.3 A	1.3 A	6SL3210-5BE13-7UV0	6SL3210-5BE13-7CV0
	0.55 kW	2.1 A	1.7 A	1.6 A	6SL3210-5BE15-5UV0	6SL3210-5BE15-5CV0
	0.75 kW	2.6 A	2.2 A	2.2 A	6SL3210-5BE17-5UV0	6SL3210-5BE17-5CV0
	0.75 kW [1)]	2.6 A	2.2 A	2.2 A	-	6SL3216-5BE17-5CV0
FSA (with single fan)	1.1 kW	4.0 A	3.1 A	3.1 A	6SL3210-5BE21-1UV0	6SL3210-5BE21-1CV0
	1.5 kW	5.0 A	4.1 A	4.1 A	6SL3210-5BE21-5UV0	6SL3210-5BE21-5CV0
	2.2 kW	6.4 A	5.6 A	4.8 A	6SL3210-5BE22-2UV0	6SL3210-5BE22-2CV0

Component	Rated output power	Rated input current	Rated output current	Output current at 480 V at 4kHz/40°C	Article number	
					unfiltered	filtered
FSB (with single fan)	3.0 kW	8.6 A	7.3 A	7.3 A	6SL3210-5BE23-0UV0	6SL3210-5BE23-0CV0
	4.0 kW	11.3 A	8.8 A	8.24 A	6SL3210-5BE24-0UV0	6SL3210-5BE24-0CV0
FSC (with single fan)	5.5 kW	15.2 A	12.5 A	11 A	6SL3210-5BE25-5UV0	6SL3210-5BE25-5CV0
FSD (with two fans)	7.5 kW	20.7 A	16.5 A	16.5 A	6SL3210-5BE27-5UV0	6SL3210-5BE27-5CV0
	11 kW	30.4 A	25 A	21 A	6SL3210-5BE31-1UV0	6SL3210-5BE31-1CV0
	15 kW	38.1 A	31 A	31 A	6SL3210-5BE31-5UV0	6SL3210-5BE31-5CV0
FSE (with two fans)	18.5 kW (HO) [2]	45 A	38 A	34 A	6SL3210-5BE31-8UV0	6SL3210-5BE31-8CV0
	22 kW (LO)	54 A	45 A	40 A		
	22 kW (HO)	54 A	45 A	40 A	6SL3210-5BE32-2UV0	6SL3210-5BE32-2CV0
	30 kW (LO)	72 A	60 A	52 A		

[1] This variant refers to the Flat Plate inverter with a flat plate heatsink.

[2] "HO" and "LO" indicate high overload and low overload respectively. You can set the HO/LO mode through relevant parameter settings.

Single phase AC 230 V variants

The single phase AC 230 V inverters are available in three frame sizes.

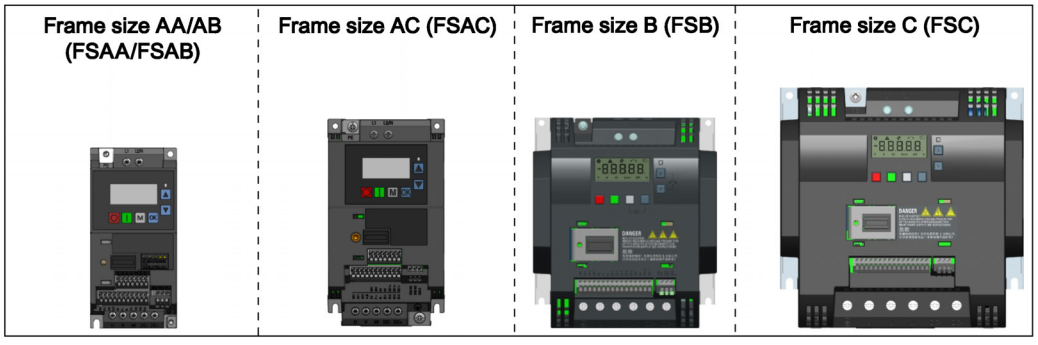

Component	Rated output power	Rated input current	Rated output current	Article number	
				unfiltered	filtered
FSAA (without fan)	0.12 kW	2.3 A	0.9 A	6SL3210-5BB11-2UV1	6SL3210-5BB11-2BV1
	0.25 kW	4.5 A	1.7 A	6SL3210-5BB12-5UV1	6SL3210-5BB12-5BV1
	0.37 kW	6.2 A	2.3 A	6SL3210-5BB13-7UV1	6SL3210-5BB13-7BV1
FSAB (without fan)	0.55 kW	7.7 A	3.2 A	6SL3210-5BB15-5UV1	6SL3210-5BB15-5BV1
	0.75 kW	10 A	4.2 A	6SL3210-5BB17-5UV1	6SL3210-5BB17-5BV1
FSAC (with single fan)	1.1 kW	14.7 A	6.0 A	6SL3210-5BB21-1UV1	6SL3210-5BB21-1BV1
	1.5 kW	19.7 A	7.8 A	6SL3210-5BB21-5UV1	6SL3210-5BB21-5BV1
FSB (with single fan)	1.1 kW	14.7 A	6.0 A	6SL3210-5BB21-1UV0	6SL3210-5BB21-1AV0
	1.5 kW	19.7 A	7.8 A	6SL3210-5BB21-5UV0	6SL3210-5BB21-5AV0
FSC (with single fan)	2.2 kW	27.2 A	11 A	6SL3210-5BB22-2UV0	6SL3210-5BB22-2AV0
	3.0 kW	32 A	13.6 A	6SL3210-5BB23-0UV0	6SL3210-5BB23-0AV0

Options and spare parts

For more information about the options and spare parts, refer to Appendices "Options (Page 345)" and "Spare parts - replacement fans (Page 390)".

2.2 Inverter rating plate

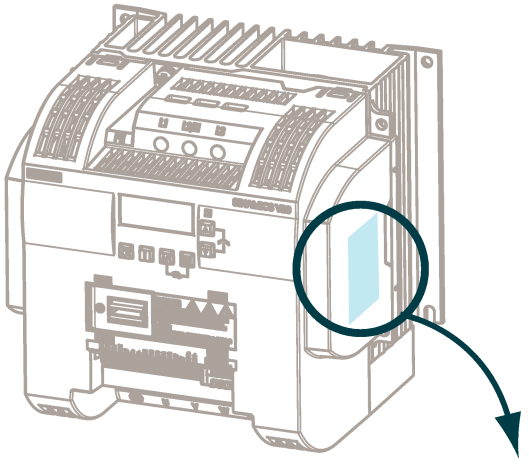

Inverter rating plate (example)

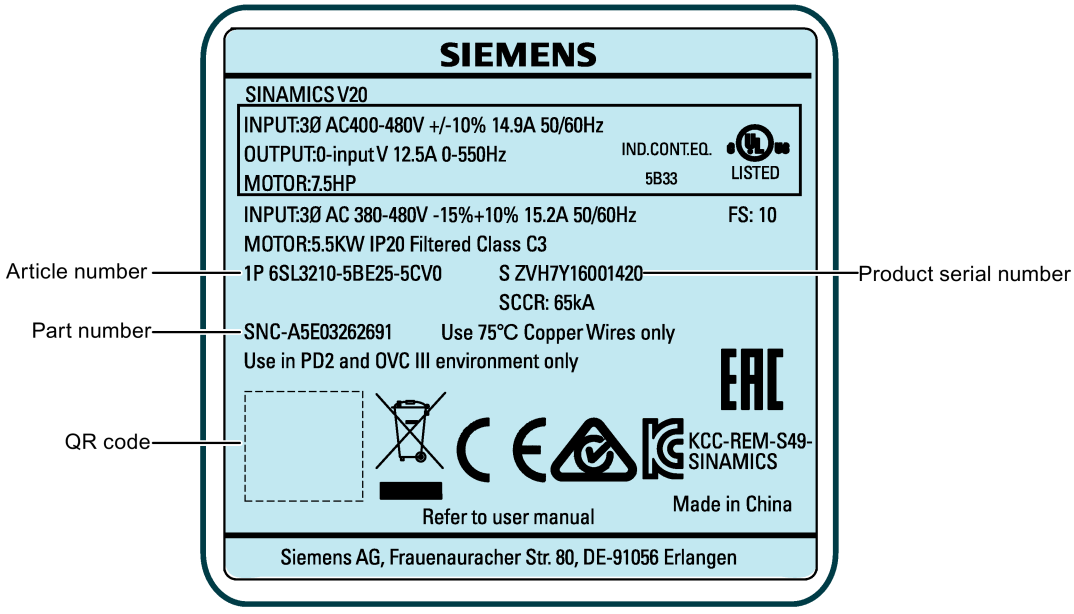

Serial number explanation (example)

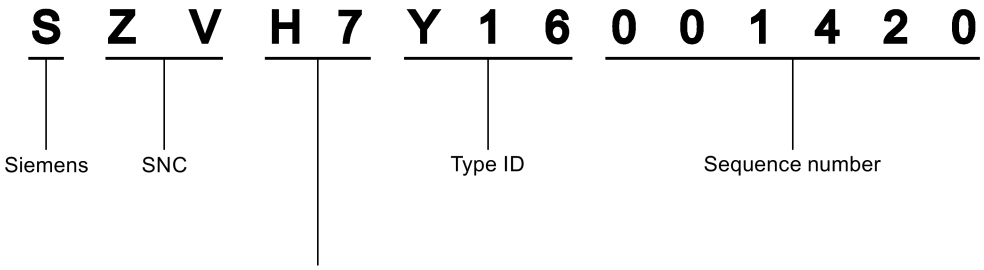

Production data (year/month)

Code *	Calendar year	Code *	Month
A	1990, 2010	1	Janauary
B	1991, 2011	2	February
C	1992, 2012	3	March
D	1993, 2013	4	April
E	1994, 2014	5	May
F	1995, 2015	6	June
H	1996, 2016	7	July
J	1997, 2017	8	Auguest
K	1998, 2018	9	September
L	1999, 2019	0	October
M	2000, 2020	N	November
N	2001, 2021	D	December
P	2002, 2022	* In accordance with DIN EN 60062	
R	2003, 2023		
S	2004, 2024		
T	2005, 2025		
U	2006, 2026		
V	2007, 2027		
W	2008, 2028		
X	2009, 2029		

Mechanical installation

3

Protection against the spread of fire

The device may be operated only in closed housings or in control cabinets with protective covers that are closed, and when all of the protective devices are used. The installation of the device in a metal control cabinet or the protection with another equivalent measure must prevent the spread of fire and emissions outside the control cabinet.

Protection against condensation or electrically conductive contamination

Protect the device, e.g. by installing it in a control cabinet with degree of protection IP54 according to IEC 60529 or NEMA 12. Further measures may be necessary for particularly critical operating conditions.

If condensation or conductive pollution can be excluded at the installation site, a lower degree of control cabinet protection may be permitted.

3.1 Mounting orientation and clearance

The inverter must be mounted in an enclosed electrical operating area or a control cabinet.

Mounting orientation

Always mount the inverter vertically to a flat and non-combustible surface.

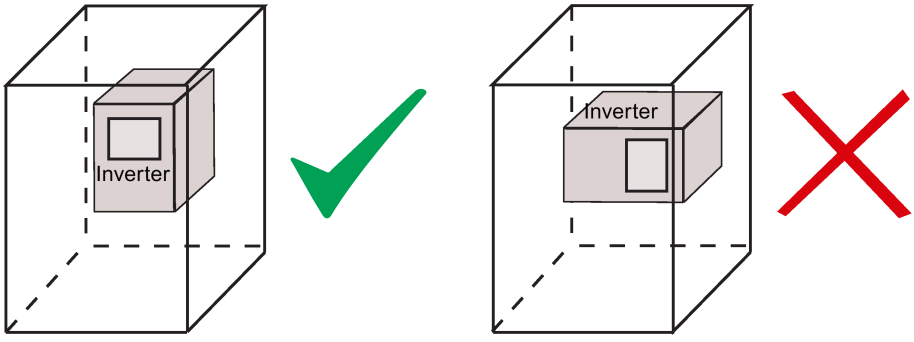

Mounting clearance

Top	≥ 100 mm
Bottom	≥100 mm (for frame sizes AA ... AC, B ... E, and frame size A without fan) ≥ 85 mm (for fan-cooled frame size A)
Side	≥ 0 mm

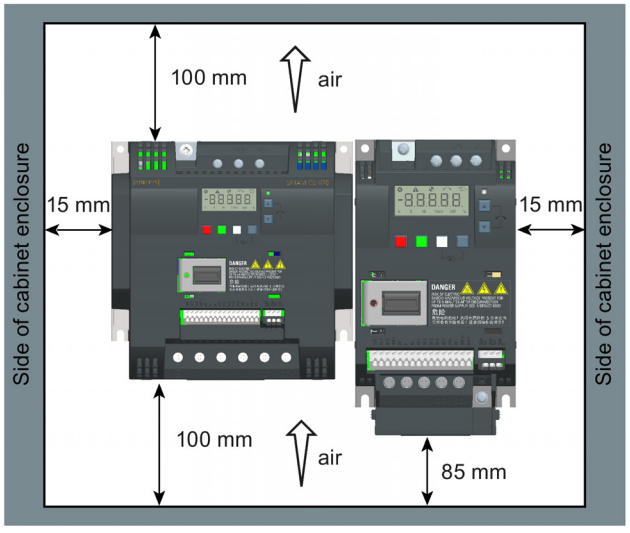

3.2 Cabinet panel mounting

You can mount the inverter directly on the surface of the cabinet panel.

Two additional mounting methods are also available for different frame sizes. For more information, refer to the following sections:

Push-through mounting (frame sizes B ... E) (Page 27)

DIN rail mounting (frame sizes AA ... B) (Page 30)

Outline dimensions and drill patterns

Dimensions (mm)	Drill pattern (mm)
Frame size AA/AB	
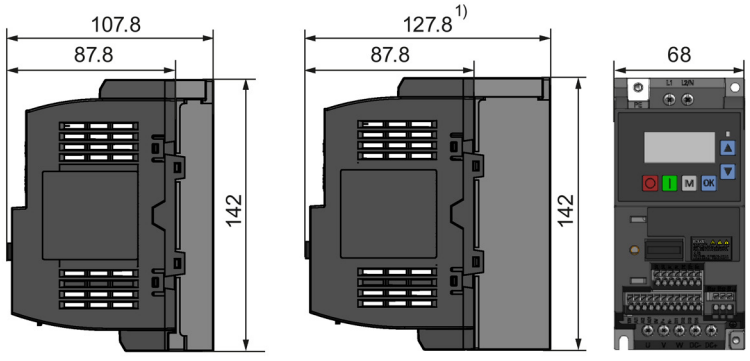	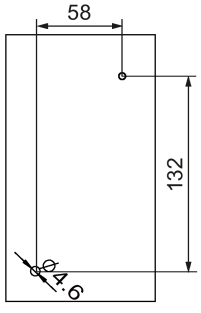 Fixings: 2 x M4 screws, nuts, washers Tightening torque: 1.8 Nm ± 10%
1) Depth of FSAB	

Dimensions (mm)	Drill pattern (mm)
Frame size AC	
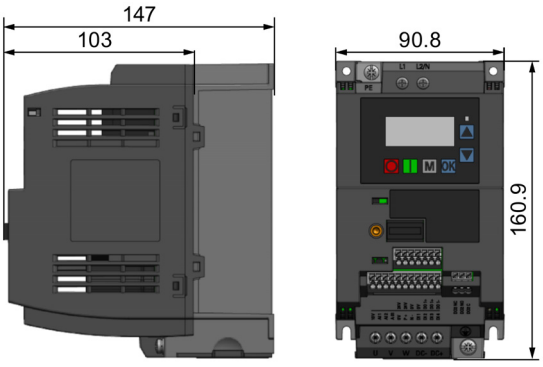	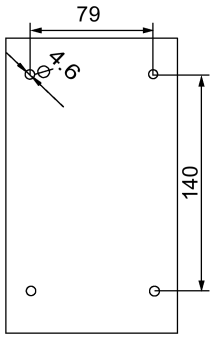 Fixings: 2 x M4 screws, nuts, washers Tightening torque: 1.8 Nm ± 10%
Frame size A	
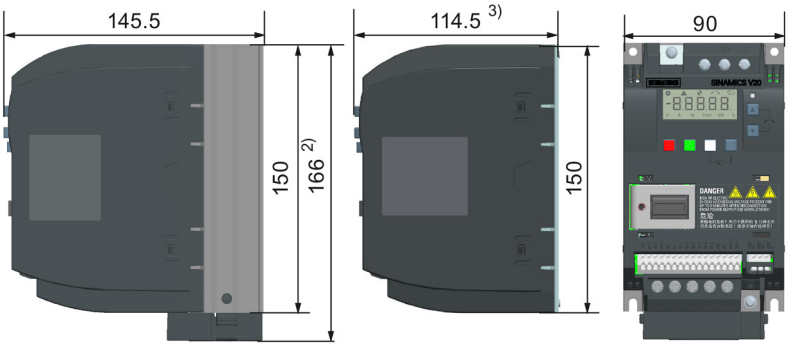 2) Height of frame size A with fan 3) Depth of Flat Plate inverter (for 400 V 0.75 kW variant only)	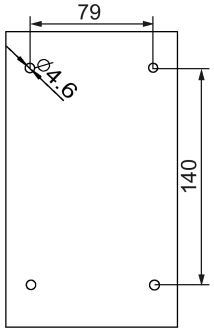 Fixings: 4 x M4 screws, nuts, washers Tightening torque: 1.8 Nm ± 10%
Frame size B	
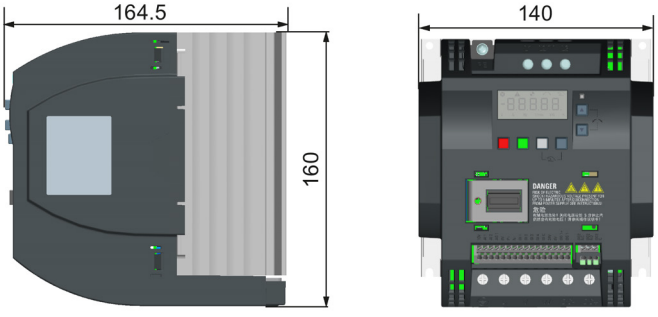	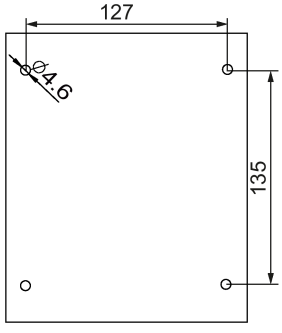 Fixings: 4 x M4 screws, nuts, washers Tightening torque: 1.8 Nm ± 10%

Dimensions (mm)	Drill pattern (mm)
Frame size C	
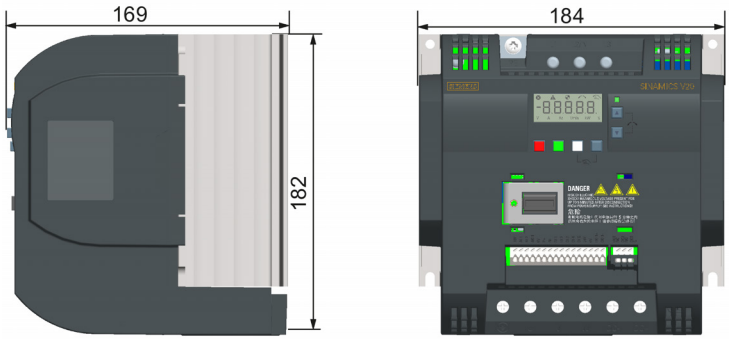	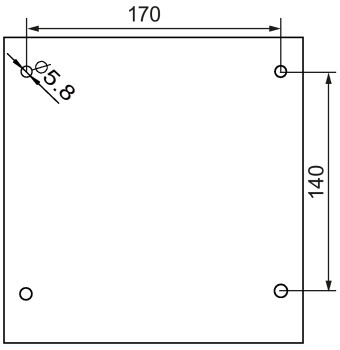 Fixings: 4 x M5 screws, nuts, washers Tightening torque: 2.5 Nm ± 10%
Frame size D	
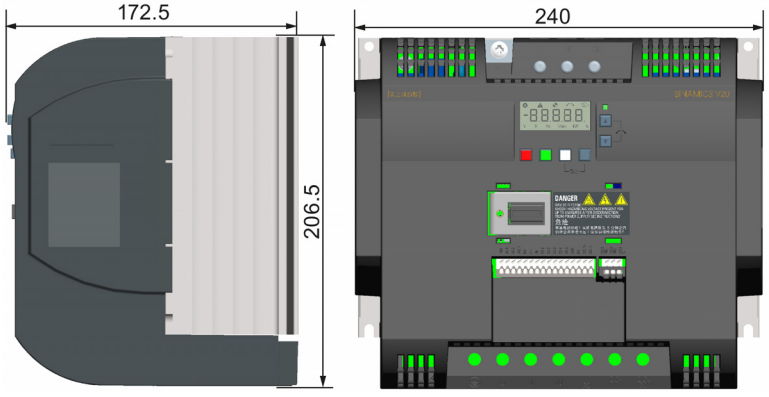	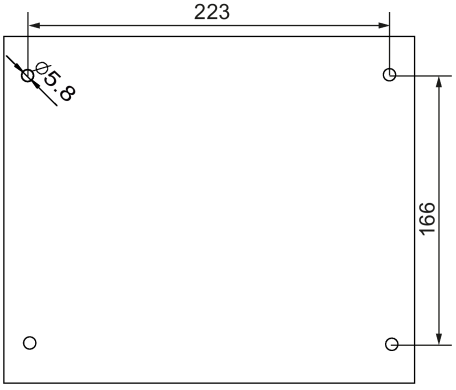 Fixings: 4 x M5 screws, nuts, washers Tightening torque: 2.5 Nm ± 10%
Frame size E	
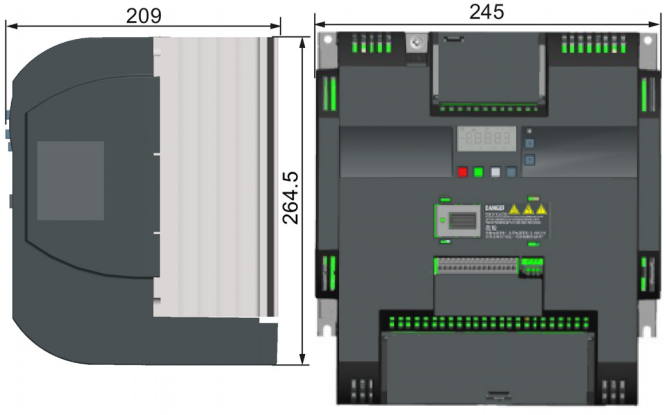	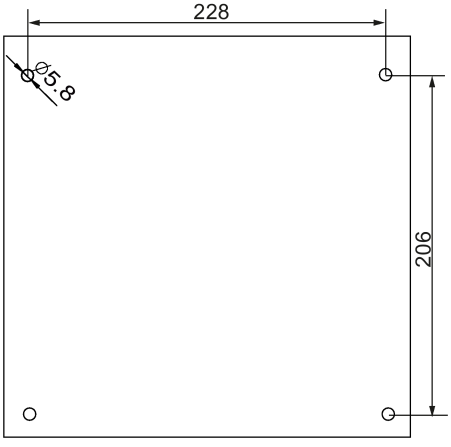 Fixings: 4 x M5 screws, nuts, washers Tightening torque: 2.5 Nm ± 10%

3.3 SINAMICS V20 Flat Plate variant

The SINAMICS V20 Flat Plate variant is designed to allow greater flexibility in the installation of the inverter. Adequate measures must be taken to ensure the correct heat dissipation, which may require an additional external heatsink outside the electrical enclosure.



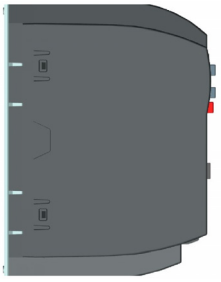

WARNING

Additional heat load

Operation with an input voltage greater than 400 V and 50 Hz or with a pulse frequency greater than 4 kHz will cause an additional heat load on the inverter. These factors must be taken into account when designing the installation conditions and must be verified by a practical load test.

CAUTION

Cooling considerations

The minimum vertical clearance of 100 mm above and below the inverter must be observed. Stacked mounting is not allowed for the SINAMICS V20 inverters.

Technical data

Flat Plate variant	Average power output		
6SL3216-5BE17-5CV0	370 W	550 W	750 W
Operating temperature range	-10 °C to 40 °C		
Max. heatsink loss	24 W	27 W	31 W
Max. control loss *	9.25 W	9.25 W	9.25 W
Recommended thermal resistance of heatsink	1.8 K/W	1.5 K/W	1.2 K/W
Recommended output current	1.3 A	1.7 A	2.2 A

* With I/O fully loaded

Installing

1. Prepare the mounting surface for the inverter using the dimensions given in Section "Cabinet panel mounting (Page 22)".
2. Ensure that any rough edges are removed from the drilled holes, the flat plate heatsink is clean and free from dust and grease, and the mounting surface and if applicable the external heatsink are smooth and made of unpainted metal (steel or aluminium).
3. Apply a non-silicone heat transfer compound with a minimum thermal transfer co-efficient of 0.9 W/m.K evenly to the rear surface of the flat plate heatsink and the surface of the rear plate.
4. Mount the inverter securely using four M4 screws with a tightening torque of 1.8 Nm (tolerance: ± 10%).
5. If it is required to use an external heatsink, first apply the paste specified in Step 3 evenly to the surface of the external heatsink and the surface of the rear plate, and then connect the external heatsink on the other side of the rear plate.
6. When the installation is completed, run the inverter in the intended application while monitoring r0037[0] (measured heatsink temperature) to verify the cooling effectiveness.

   The heatsink temperature must not exceed 90 °C during normal operation, after the allowance has been made for the expected surrounding temperature range for the application.

   Example:

   If the measurements are made in 20 °C surrounding, and the machine is specified up to 40 °C, then the heatsink temperature reading must be increased by [40-20] = 20 °C, and the result must remain below 90 °C.

   If the heatsink temperature exceeds the above limit, then further cooling must be provided (for example, with an extra heatsink) until the conditions are met.

Note

The inverter will trip with fault condition F4 if the heatsink temperature rises above 100 °C. This protects the inverter from potential damage due to high temperatures.

3.4 Push-through mounting (frame sizes B ... E)

The frame sizes B to E are designed to be compatible with "push-through" applications, allowing you to mount the heatsink of the inverter through the back of the cabinet panel. When the inverter is mounted as the push-through variant, no higher IP rating is achieved. Make sure that the required IP rating for the enclosure is maintained.

Two additional mounting methods are also available for different frame sizes. For more information, refer to the following sections:

- Cabinet panel mounting (Page 22)
- DIN rail mounting (frame sizes AA ... B) (Page 30)

Outline dimensions, drill patterns, and cut-outs

Dimensions (mm)	Drill pattern and cut-out (mm)
Frame size B	
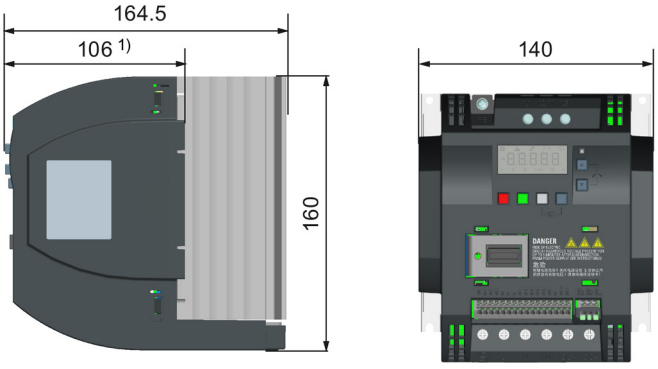	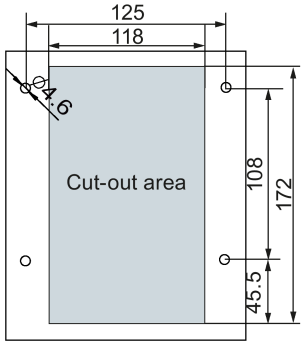 Fixings: 4 x M4 screws Tightening torque: 1.8 Nm ± 10%
Frame size C	
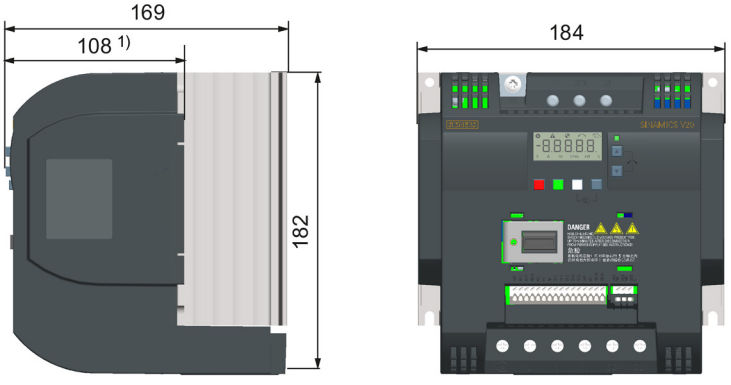	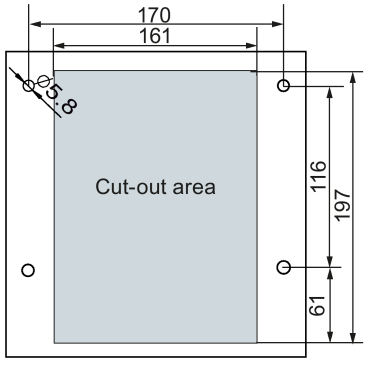 Fixings: 4 x M5 screws Tightening torque: 2.5 Nm ± 10%

Dimensions (mm)	Drill pattern and cut-out (mm)
Frame size D	
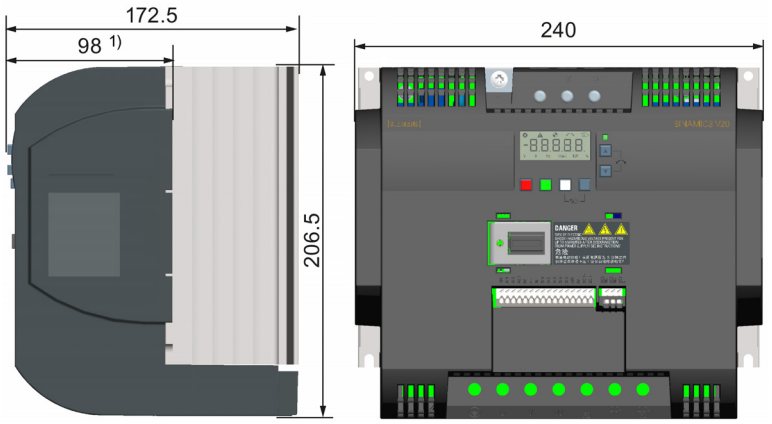	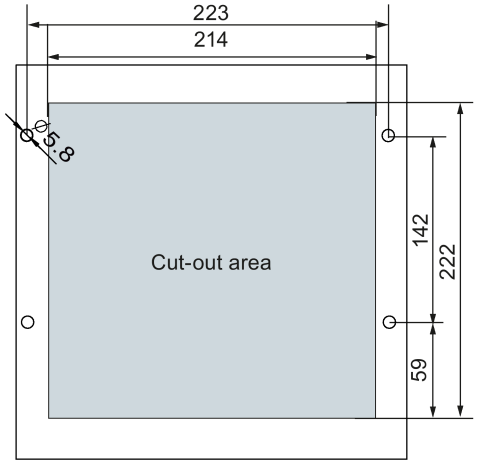 Fixings: 4 x M5 screws Tightening torque: 2.5 Nm ± 10%
Frame size E	
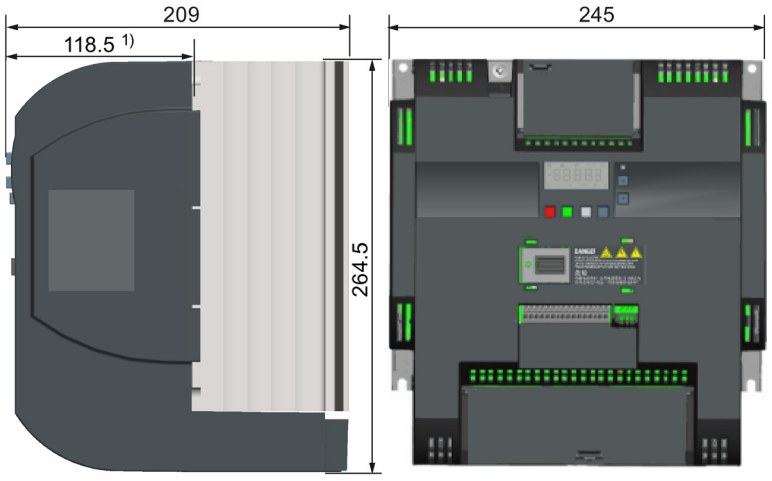	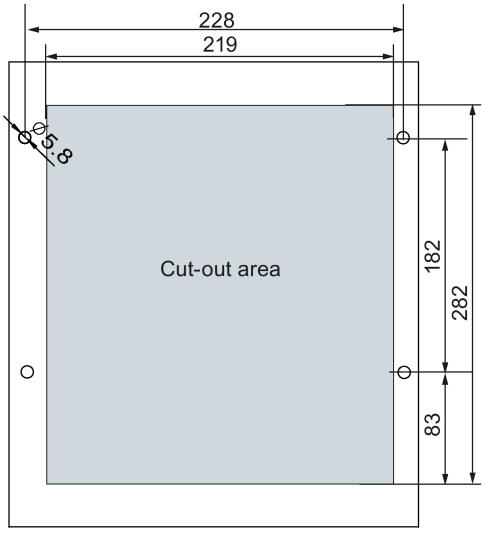 Fixings: 4 x M5 screws Tightening torque: 2.5 Nm ± 10%

1) Depth inside the cabinet

Mounting

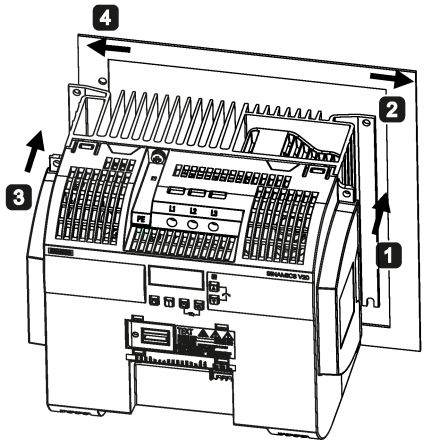

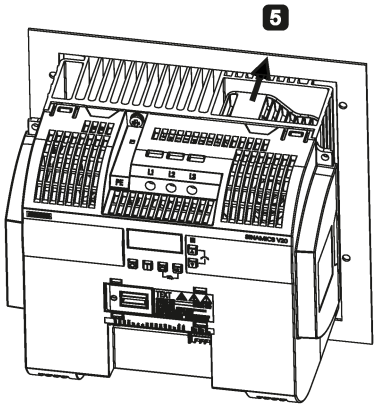

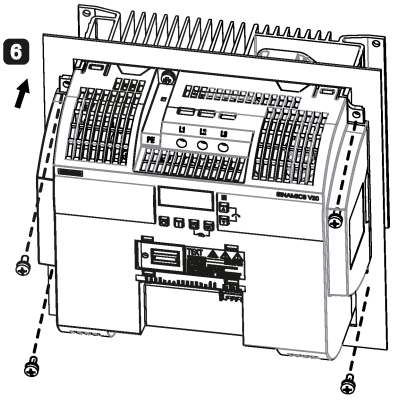

1. For FSB to FSD: Push one side of the heatsink through the back of the cabinet panel.
   For FSE: Push the right side of the heatsink through the back of the cabinet panel.
2. Move the heatsink towards the edge of the cut-out area until the concaved slot of the heatsink engages with the edge of the cut-out area.
3. Push the other side of the heatsink through the back of the cabinet panel.
4. Move the heatsink towards the edge of the cut-out area until sufficient space for pushing the entire heatsink through the back of the cabinet panel is left.
5. Push the entire heatsink through the back of the cabinet panel.
6. Align the four mounting holes in the inverter with the corresponding holes in the cabinet panel. Fix the aligned holes with four screws.

Note

A gap is reserved at the bottom of the cut-out area to allow fan removal from outside the cabinet without removing the inverter.

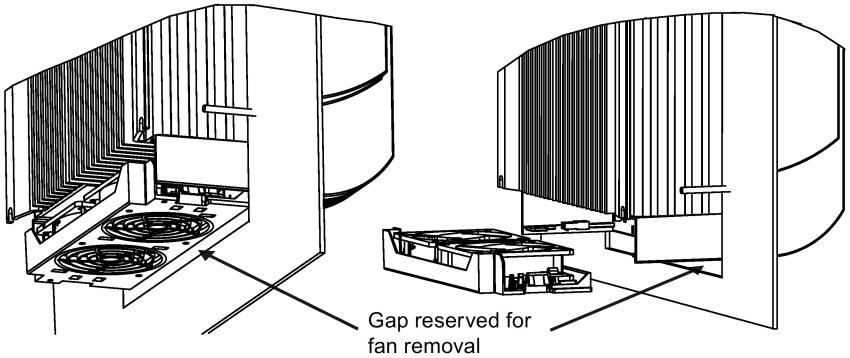

3.5 DIN rail mounting (frame sizes AA ... B)

By means of the optional DIN rail mounting kit, you can mount the frame size AA, AB, AC, A, or B to the DIN rail.

Two additional mounting methods are also available for different frame sizes. For more information, refer to the following sections:

- Cabinet panel mounting (Page 22)
- Push-through mounting (frame sizes B ... E) (Page 27)

Note

To install or remove the inverter, use a cross-tip or flat-bit screwdriver.

Installing and removing FSAA/FSAB/FSAC to and from the DIN rail

For more information, see Section "Migration mounting kit for FSAA ... FSAC (Page 383)".

Installing FSA/FSAC to the DIN rail

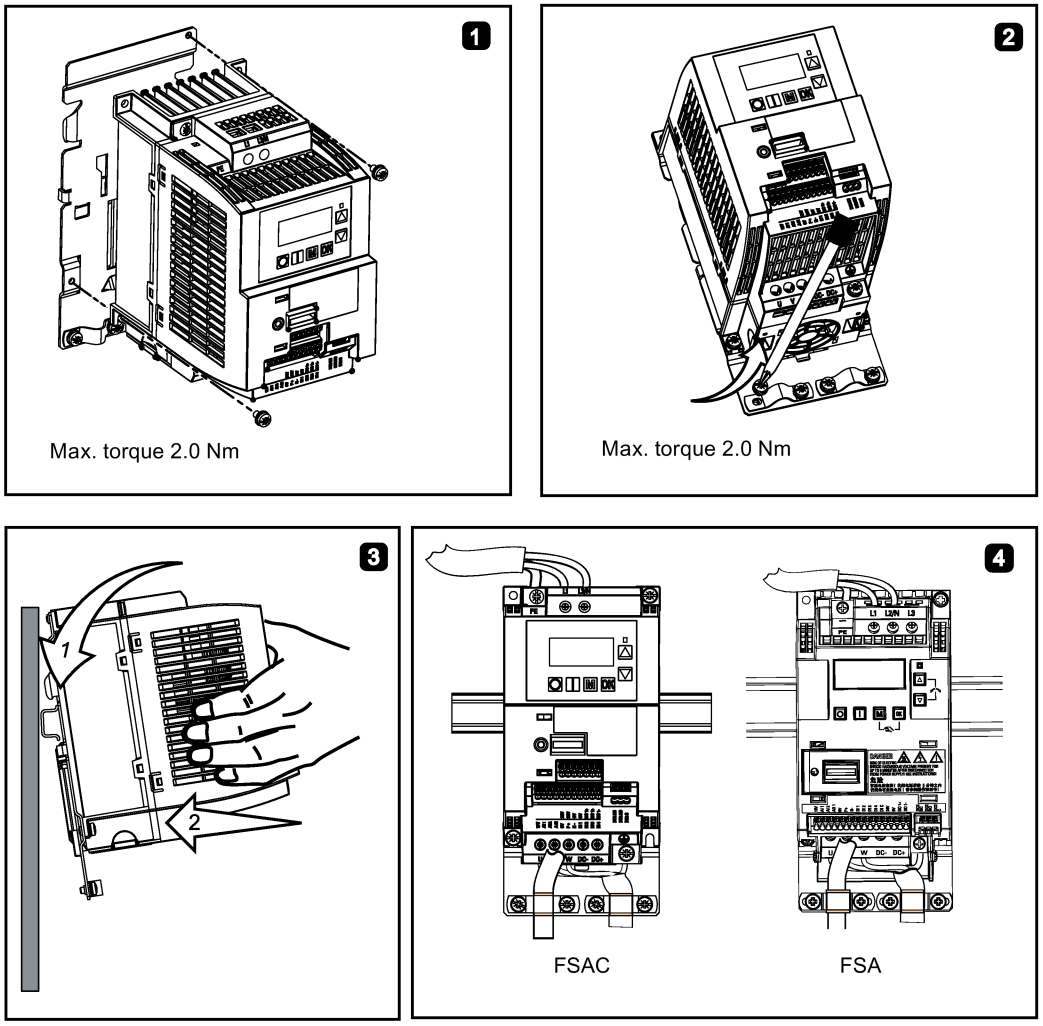

Removing FSA/FSAC from the DIN rail

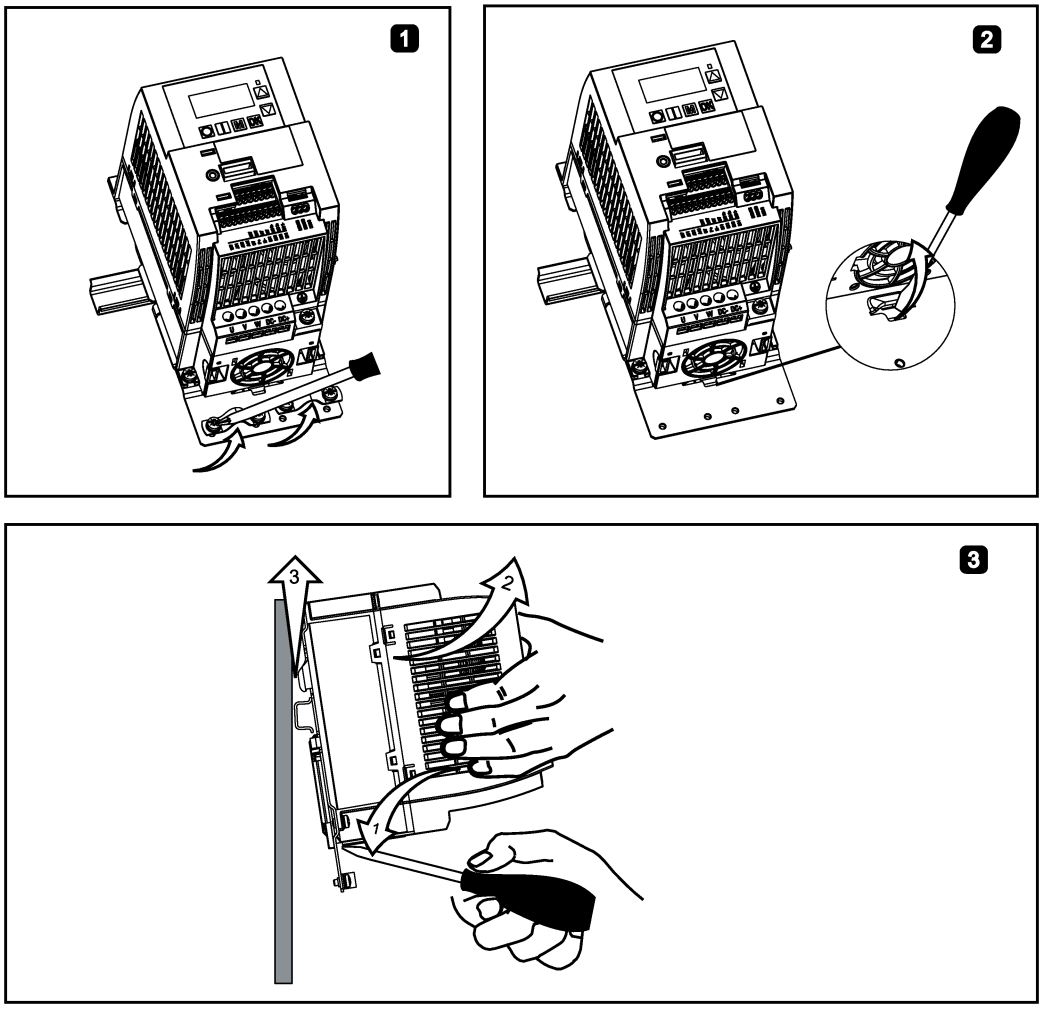

Installing FSB to the DIN rail

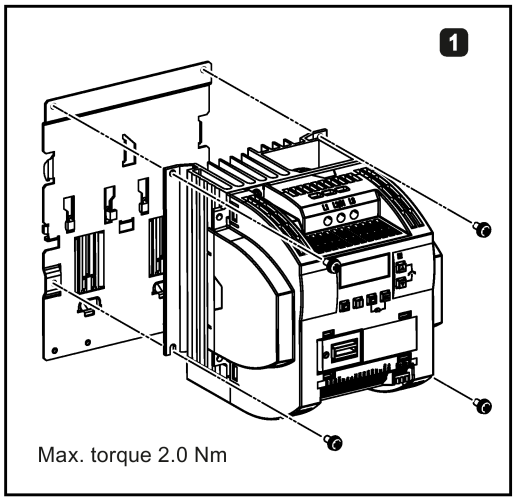

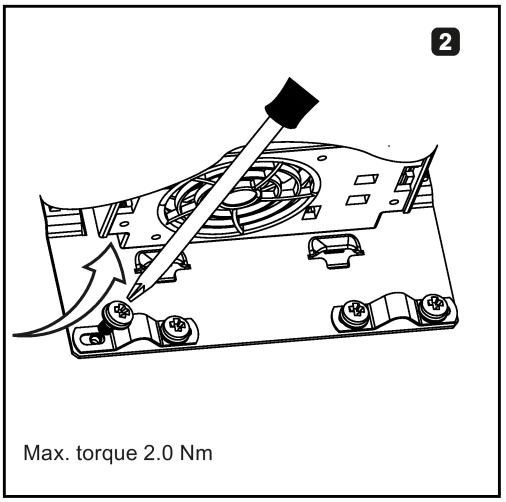

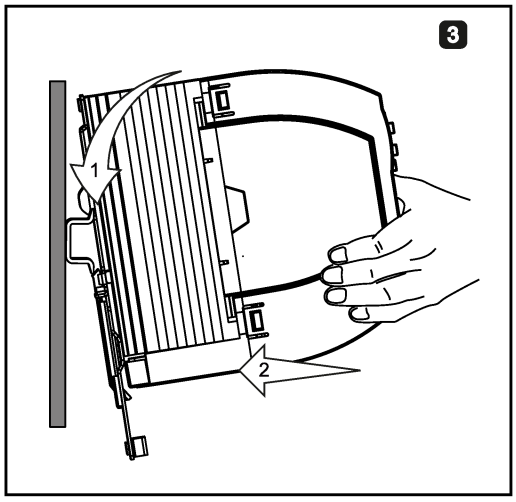

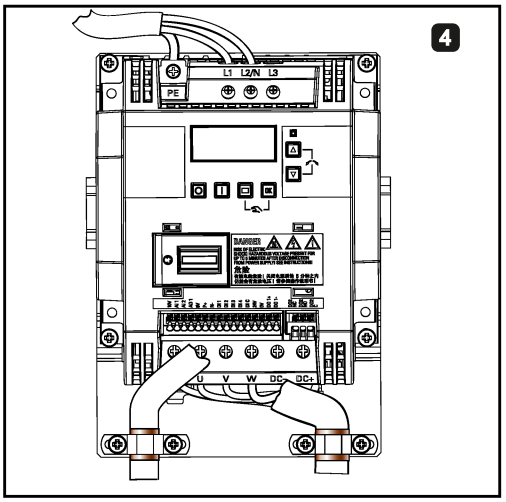

Removing FSB from the DIN rail

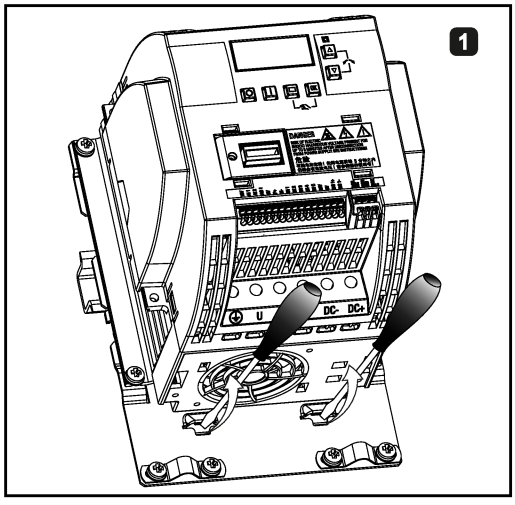

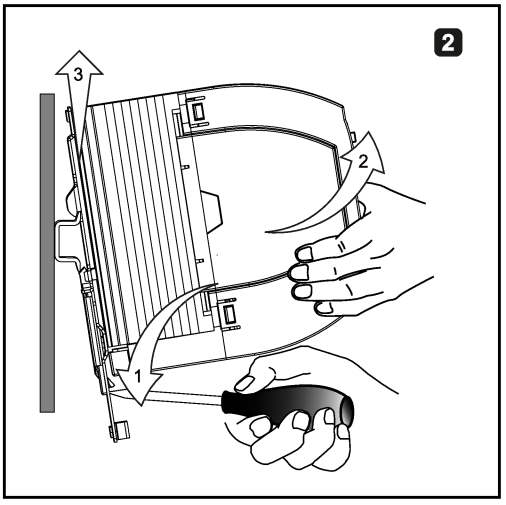

Electrical installation

4

Third-party motors that can be operated

You can operate standard asynchronous motors from other manufacturers with the inverter:

NOTICE
Motor damage due to the use of an unsuitable third-party motor A higher load occurs on the motor insulation in inverter mode than with mains operation. Damage to the motor winding may occur as a result. • Please observe the notes in the System Manual "Requirements for third-party motors"

Additional information is provided on the Internet: Requirements for third-party motors (https://support.industry.siemens.com/cs/ww/en/view/79690594)

4.1 Typical system connections

Typical system connections

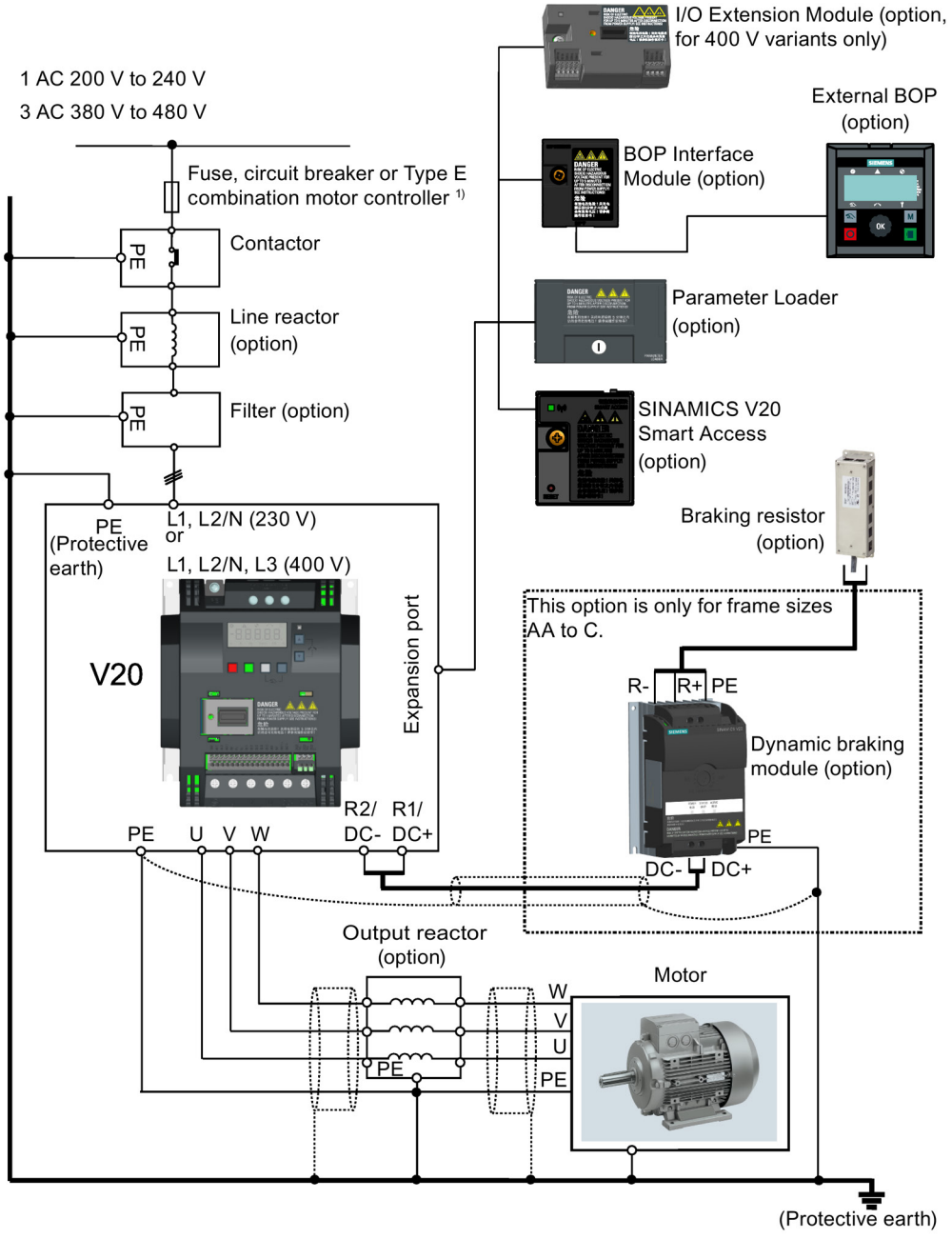

1) For more information on the permissible types for these branch circuit protection devices, see the Product Information of Protective Devices for SINAMICS V20 Inverter (https://support.industry.siemens.com/cs/ww/en/ps/13208/man).

Note

Requirements for United States/Canadian installations (UL/cUL)

For configurations in conformance with UL/cUL, use the UL/cUL approved fuses, circuit breakers and Type E combination motor controllers (CMC). Refer to the Product Information of Protective Devices for SINAMICS V20 Inverter (https://support.industry.siemens.com/cs/ww/en/ps/13208/man) for specific types of branch circuit protection for each inverter and corresponding Short-Circuit Current Rating (SCCR). For each frame size, use 75 °C copper wire only.

This equipment is capable of providing internal motor overload protection according to UL508C/UL61800-5-1. In order to comply with UL508C/UL61800-5-1, parameter P0610 must not be changed from its factory setting of 6.

For Canadian (cUL) installations the inverter mains supply must be fitted with any external recommended suppressor with the following features:

- Surge-protective devices; device shall be a Listed Surge-protective device (Category code VZCA and VZCA7)
- Rated nominal voltage 480/277 VAC (for 400 V variants) or 240 VAC (for 230 V variants), 50/60 Hz, three phase (for 400 V variants) or single phase (for 230V variants)
- Clamping voltage VPR = 2000 V (for 400 V variants)/1000 V (for 230 V variants), IN = 3 kA min, MCOV = 508 VAC (for 400 V variants)/264 VAC (for 230V variants), short circuit current rating (SCCR) = 40 kA
- Suitable for Type 1 or Type 2 SPD application
- Clamping shall be provided between phases and also between phase and ground



⚠WARNING

Risk of electric shock and fire from a network with an excessively high impedance

Excessively low short-circuit currents can lead to the protective devices not tripping or tripping too late, and so causing electric shock or a fire.

- In the case of a conductor-conductor or conductor-ground short-circuit, ensure that the short-circuit current at the point where the inverter is connected to the line supply at least meets the minimum requirements for the response of the protective device used.
- You must use an additional residual-current device (RCD) if a conductor-ground short circuit does not reach the short-circuit current required for the protective device to respond. The required short-circuit current can be too low, especially for TT systems.



⚠WARNING

Risk of electric shock and fire from a network with an impedance that is too low

Excessively high short-circuit currents can lead to the protective devices not being able to interrupt these short-circuit currents and being destroyed, and so causing electric shock or a fire.

- Ensure that the uninfluenced short-circuit current at the line terminal of the inverter does not exceed the breaking capacity (SCCR or Icc) of the protective device used.



WARNING

Danger to life through electric shock as well as fire hazard due to protective devices that either do not trip or trip too late

Overcurrent protective equipment that trips too late or not all can cause electric shock or fire.

- In the case of a conductor-conductor or conductor-ground short-circuit, ensure that the short-circuit current at the point where the inverter is connected to the line supply corresponds as a minimum to the requirements of the protective equipment used.
- You must additionally use a residual-current protective device (RCD) if, for a conductor-ground short circuit, the required short-circuit current is not reached. Especially for TT line systems, the required short-circuit can be too low.
- It is not permissible that the short-circuit current exceeds the SCCR or the I_{CC} of the inverter and the disconnecting capacity of the protective equipment.



WARNING

Danger to life caused by high leakage currents for an interrupted protective conductor

The inverter components conduct a high leakage current via the protective conductor. The earth leakage current of the SINAMICS V20 inverter may exceed 3.5 mA AC.

Touching conductive parts when the protective conductor is interrupted can result in death or serious injury.

A fixed earth connection or a multicore supply cable with connectors for industrial applications according to IEC 60309 is required and the minimum size of the protective earth conductor shall comply with the local safety regulations for high leakage current equipment.

WARNING

Danger to life due to fire spreading because of an unsuitable or improperly installed braking resistor

Using an unsuitable or improperly installed braking resistor can cause fires and smoke to develop. Fire and smoke development can cause severe personal injury or material damage.

- Only use braking resistors that are approved for the inverter.
- Install the braking resistor in accordance with regulations.
- Monitor the temperature of the braking resistor.

Wiring diagram

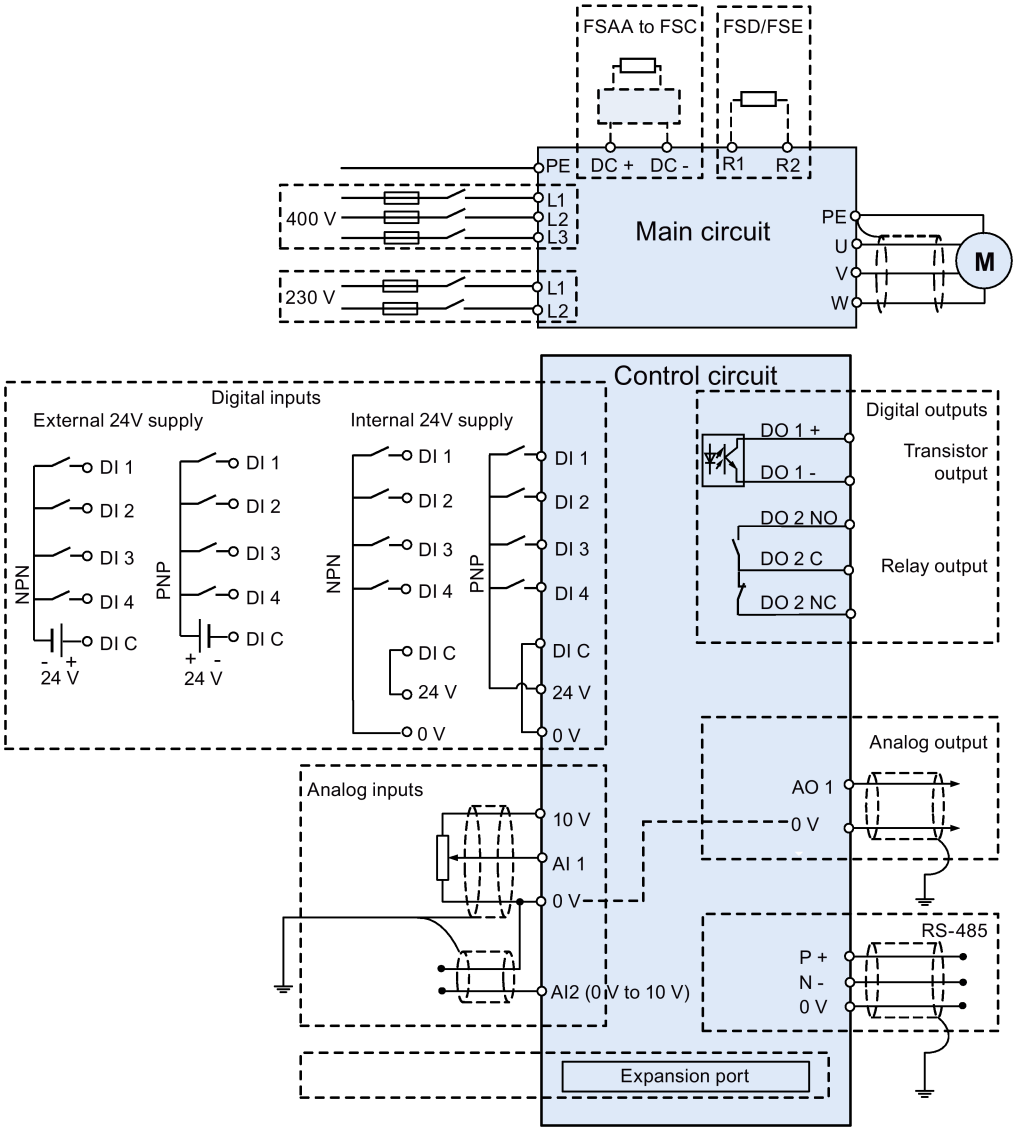

Note

The resistance of the potentiometer for each analog input must be ≥ 4.7 kΩ.

The optional I/O Extension Module can expand the number of V20 I/O terminals. See the following for the wiring diagram of the I/O Extension Module:

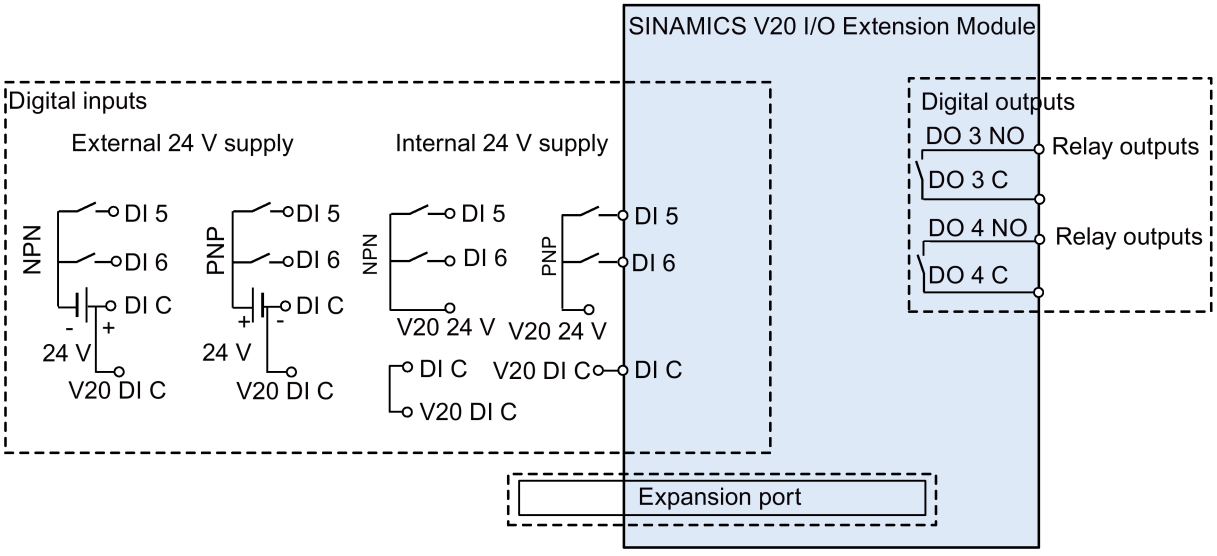



WARNING

Electric shock and danger to life due to connection to an unsuitable power system

If DO3 and DO4 are used in a power supply system that exceeds overvoltage category II (OVC II), contact with live parts of the V20 inverter and its options including expansion ports, SELV (Safety Extra Low Voltage) terminals, and connected wires can result in death or severe injury.

- Use DO3 and DO4 only in the power system whose voltage does not exceed OVC II.

Note

- To use the DIs on both the V20 and the I/O Extension Module as a single group of DIs, connect the V20 DI C to the DI C on the I/O Extension Module (see the previous figure).
- To use the DIs on both the V20 and the I/O Extension Module as two separate groups of DIs, do not connect the V20 DI C to the DI C on the I/O Extension Module.

For more information about the wiring diagram, see Section "Setting connection macros (Page 65)".

4.2 Terminal description

Terminal layout

Mains terminals

3AC 400 V L1 L2/N L3 1AC 230 V L1 L2/N

FSA to FSD FSAA to FSC

3AC 400 V EMC L1 L2/N L3

FSE

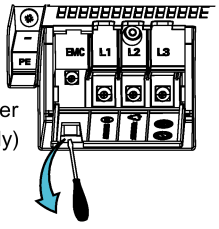

Upper cover (FSE only)

To open the upper cover, push the locking latch of the cover downwards with a flat-bit screwdriver.

Recommended cable types for connecting mains terminals and motor terminals:

FSAA/ FSAB/ FSAC/ FSA/ FSB	FSC/ FSD	FSE	
✓	✓	✗	Cable with UL/cUL-certified fork crimp
✗	✗	✓	Cable with UL/cUL-certified ring crimp

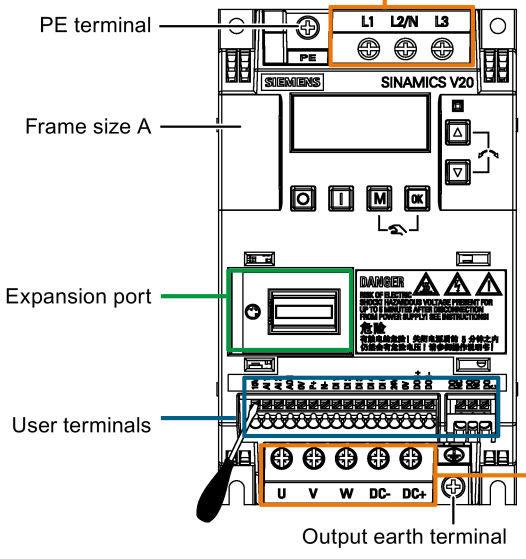

Align a flat-bit screwdriver (bit size: 0.4 x 2.5 mm) with the terminal. Push it downwards on the release lever with a maximum force of 12 N and insert the control wire from below.

Motor terminals

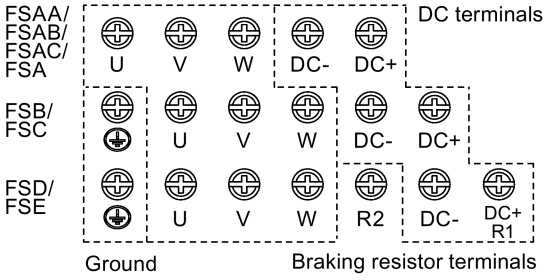

Lower cover (FSE only)

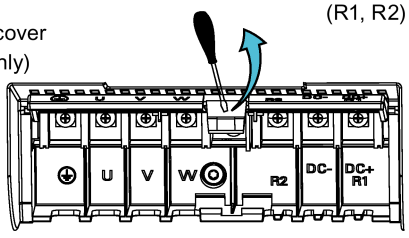

To open the lower cover, pull the locking latch of the cover upwards with a flat-bit screwdriver.

User terminals for FSAA/FSAB:

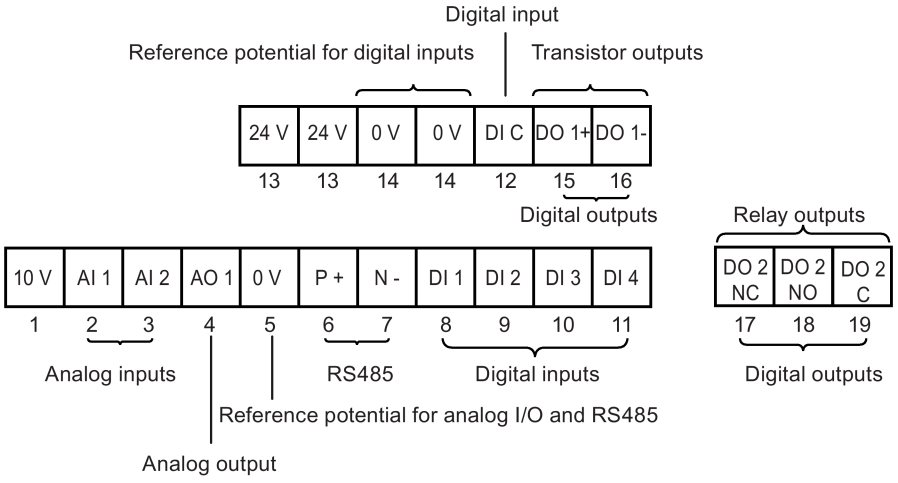

User terminals for FSA to FSE:

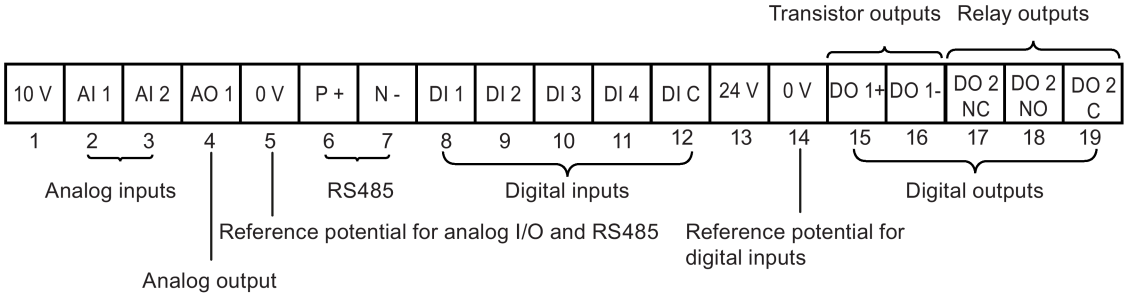

NOTICE

Inverter damage due to overvoltage

Using signal cables of more than 30 m at the digital inputs and 24 V power supply can lead to overvoltage during switching operations. This can result in damage to the inverter.

- Make sure that you use signal cables of equal to or smaller than 30 m at the digital inputs and 24 V power supply.

Note

To disconnect the integrated EMC filter on FSE from the ground, you can use a Pozidriv or flat-bit screwdriver to remove the EMC screw.

User terminals for I/O Extension Module (option):

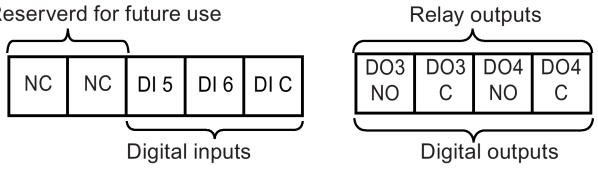

Recommended cable cross-sections, crimp types and screw tightening torques

Material
Crimp body: copper
Insulation: nylon
Plating: tin

Fork crimp

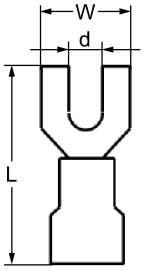

Ring crimp

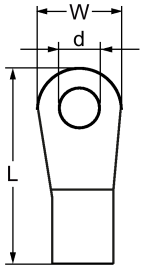

Frame size	Rated output power (kW)	Crimp type	Mains and PE terminals					Motor/DC/braking resistor/output earth terminals				
			Cable cross-section [1]	d (mm)	W (mm)	L (mm)	Screw tightening torque (Nm/lbf.in) [2]	Cable cross-section [1]	d (mm)	W (mm)	L (mm)	Screw tightening torque (Nm/lbf.in) [2]
400 V												
A	0.37 ... 0.75	U	1.0 mm² (14)	≥ 3.7	< 8	> 22	1.0/8.9	1.0 mm² (14)	≥ 3.7	< 8	> 22	1.0/8.9
	1.1 ... 2.2		1.5 mm² (14)					1.5 mm² (14)				
B	3.0 ... 4.0		4 mm² (10)	≥ 3.7	< 8	> 25		2.5 mm² (12)	≥ 4.2	< 8	> 22	1.5/13.3
C	5.5		4 mm² (10)	≥ 5.2	< 12	> 25	2.4/21.2	4 mm² (10)	≥ 5.2	< 12	> 25	2.4/21.2
D	7.5		6 mm² (10)	≥ 5.2	< 12	> 28		6 mm² (10)	≥ 5.2	< 12	> 28	
	11 ... 15		10 mm² (6)									
E	18.5	O	10 mm² (6)	≥ 5.2	< 13	> 30		10 mm² (6)	≥ 5.2	< 13	> 30	
	22		16 mm² (4)					6 mm² (8)				
	30		25 mm² (3)					10 mm² (6)				
230 V												
AA/AB	0.12 ... 0.25	U	1.0 mm² (14)	≥ 4.2	< 7	> 22	1.0/8.9	1.0 mm² (14)	≥ 3.2	< 7	> 22	1.0/8.9
	0.37 ... 0.55		1.5 mm² (14)									
	0.75		2.0 mm² (14)									
AC	1.1 ... 1.5		4.0 mm² (12)					2.5 mm² (12)				
B	1.1 ... 1.5		6.0 mm² (10)	≥ 3.7	< 8	> 25			≥ 4.2	< 8	> 22	1.5/13.3
C	2.2 ... 3.0		10 mm² (6)	≥ 5.2	< 12	> 25	2.4/21.2	4.0 mm² (10)	≥ 5.2	< 12	> 25	2.4/21.2

[1] Data in brackets indicates the corresponding AWG values.

[2] Tolerance: ± 10%

NOTICE
Damage to the mains terminals
During electrical installation of the inverter frame sizes AA to D, only cables with UL/cUL-certified fork crimps can be used for the mains terminal connections; for frame size E, only cables with UL/cUL-certified ring crimps can be used for the mains terminal connections.

Maximum motor cable lengths

Inverter variant	Maximum cable length					
	EMC compliant		Without output reactor		With output reactor	
400 V	**With integrated EMC filter** [1]	**With external line filter** [2]	**Unshielded**	**Shielded**	**Unshielded**	**Shielded**
FSA	10 m	25 m	50 m	25 m	150 m	150 m
FSB to FSD	25 m	25 m	50 m	25 m	150 m	150 m
FSE	50 m	25 m	100 m	50 m	300 m	200 m
230 V	**With integrated EMC filter**	**With external line filter**	**Unshielded**	**Shielded**	**Unshielded**	**Shielded**
FSAA/FSAB	5 m [3]	5 m [3]	50 m	25 m	200 m	200 m
FSAC	10 m [3]	10 m [2]	50 m	25 m	200 m	200 m
FSB to FSC	25 m [2]	5 m [3]	50 m	25 m	200 m	200 m

[1] EMC (RE/CE C3) compliant, second environment (industrial area). RE/CE C3 refers to EMC compliance to EN61800-3 Category C3 (level equivalent to EN55011, Class A2) for Radiated and Conducted Emissions.

[2] EMC (RE/CE C2) compliant, first environment (residential area). RE/CE C2 refers to EMC compliance to EN61800-3 Category C2 (level equivalent to EN55011, Class A1) for Radiated and Conducted Emissions. See Section B.1.7 for the specifications of external line filters.

[3] EMC (RE/CE C1) compliant, first environment (residential area). RE/CE C1 refers to EMC compliance to EN61800-3 Category C1 (level equivalent to EN55011, Class B) for Radiated and Conducted Emissions.

Star-delta connection of the motor

Select delta connection if either a 230/400 V motor on a 400 V inverter or a 120/230 V motor on a 230 V inverter is supposed to operate at 87 Hz instead of 50 Hz.

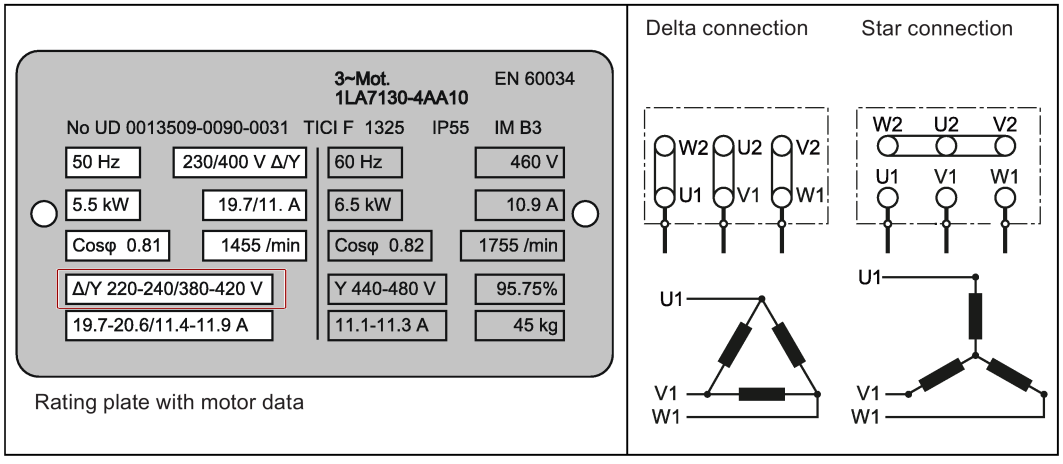

Rating plate with motor data

User terminals

The illustration below takes the user terminal layout for FSA to FSE for example.

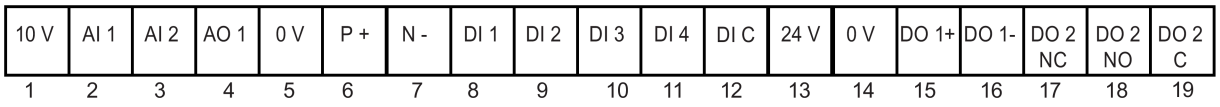

	No.	Terminal marking	Description	
	1	10V	10 V output (tolerance ± 1% for the temperature range of 20 °C to 30 °C) referred to 0V, maximum 11 mA, short circuit protected	
Analog inputs	2 3	AI1 AI2	Mode:	AI1: Single-ended, bipolar current and voltage mode AI2: Single-ended, unipolar current and voltage mode
			Isolation to control circuit:	None
			Voltage range:	AI1: -10 V to 10 V; AI2: 0 V to 10 V
			Current range:	0 mA to 20 mA (4 mA to 20 mA - software selectable)
			Voltage mode accuracy:	± 1% full scale for the temperature range of 20 °C to 30 °C
			Current mode accuracy:	± 1% full scale for the temperature range of 20 °C to 30 °C
			Input impedance:	Voltage mode: > 30 K Current mode: 235 R
			Resolution:	12-bit
			Wire break detect:	Yes
			Threshold 0 ⇒ 1 (used as DIN):	4.0 V
			Threshold 1 ⇒ 0 (used as DIN):	1.6 V
			Response time (digital input mode):	4 ms ± 4 ms
Analog output	4	AO1	Mode:	Single-ended, unipolar current mode
			Isolation to control circuit:	None
			Current range:	0 mA to 20 mA (4 mA to 20 mA - software selectable)
			Accuracy (0 mA to 20 mA):	± 0.5 mA for the temperature range of -10 °C to 60 °C
			Output capability:	20 mA into 500 R
	5	0V	Overall reference potential for RS485 communication and analog inputs/output	
	6	P+	RS485 P +	
	7	N-	RS485 N -	

	No.	Terminal marking	Description	
Digital inputs *	8 9 10 11 12	DI1 DI2 DI3 DI4 DI C	Mode:	PNP (reference terminal low) NPN (reference terminal high) Characteristics values are inverted for NPN mode.
			Isolation to control circuit:	Electrically isolated
			Absolute maximum voltage:	± 35 V for 500 ms every 50 seconds
			Operating voltage:	- 3 V to 30 V
			Threshold 0 ⇒ 1 (maximum):	11 V
			Threshold 1 ⇒ 0 (minimum):	5 V
			Input current (guaranteed off):	0.6 mA to 2 mA
			Input current (maximum on):	15 mA
			2-wire Bero compatibility:	No
			Response time:	4 ms ± 4 ms
			Pulse train input:	No
	13	24V	24 V output (tolerance: - 15 % to + 20 %) referred to 0 V, maximum 50 mA, non-isolated	
	14	0V	Overall reference potential for digital inputs	
Digital outputs (transistor)	15 16	DO1 + DO1 -	Mode:	Normally open voltage-free terminals, polarised
			Isolation to control circuit:	500 VDC (functional low voltage)
			Maximum voltage across terminals:	± 35 V
			Maximum load current:	100 mA
			Response time:	4 ms ± 4 ms
Digital outputs (relay) *	17 18 19	DO2 NC DO2 NO DO2 C	Mode:	Change-over voltage-free terminals, unpolarised
			Isolation to control circuit:	4 kV (230 V mains)
			Maximum voltage across terminals:	240 VAC/30 VDC + 10 %
			Maximum load current:	0.5 A @ 250 VAC, resistive 0.5 A @ 30 VDC, resistive
			Response time:	Open: 7 ms ± 7 ms Close: 10 ms ± 9 ms

* The optional I/O Extension Module provides additional DIs and DOs which share the same technical specifications as those on the SINAMICS V20 inverter.

⚠ WARNING

Risk of electric shock

The input and output terminals, numbered 1 to 16, are safety extra low voltage (SELV) terminals and must only be connected to low voltage supplies.

Recommended I/O terminal cable cross-section

Cable type	Recommended cable cross-section *
Solid or stranded cable	0.5 mm^2 to 1 mm^2 (20 to 18)
Ferrule with insulating sleeve	0.25 mm^2 (24)

* Data in brackets indicates the corresponding AWG values.

Expansion port

The expansion port is designed for connecting the inverter to the external option module - BOP Interface Module, Parameter Loader, SINAMICS V20 Smart Access, or I/O Extension Module, in order to realize the following functions:

- Operating the inverter from the external BOP that is connected to the BOP Interface Module
- Cloning parameters between the inverter and a standard SD card through the Parameter Loader
- Powering the inverter from the Parameter Loader, when mains power is not available
- Accessing the inverter from a connected device (conventional PC with wireless network adapter installed, tablet, or smart phone) with the aid of SINAMICS V20 Smart Access
- Providing additional DIs and DOs to realize more inverter control functions through the I/O Extension Module

For more information about these option modules, see Sections "Parameter Loader (Page 345)", "External BOP and BOP Interface Module (Page 350)", "Commissioning using SINAMICS V20 Smart Access (Page 135)", and "I/O Extension Module (Page 389)".

4.3 EMC-compliant installation

EMC-compliant installation of the inverter

The shield connection kit is supplied as an option for each frame size. For more information about this option, see Appendix "Shield connection kits (Page 377)". It allows easy and efficient connection of the necessary shield to achieve EMC-compliant installation of the inverter. If no shield connection kit is used, you can alternatively mount the device and additional components on a metal mounting plate with excellent electrical conductivity and a large contact area. This mounting plate must be connected to the cabinet panel and the PE or EMC bus bar.

The following diagram shows an example of EMC-compliant installation of the inverter frame size B/C.

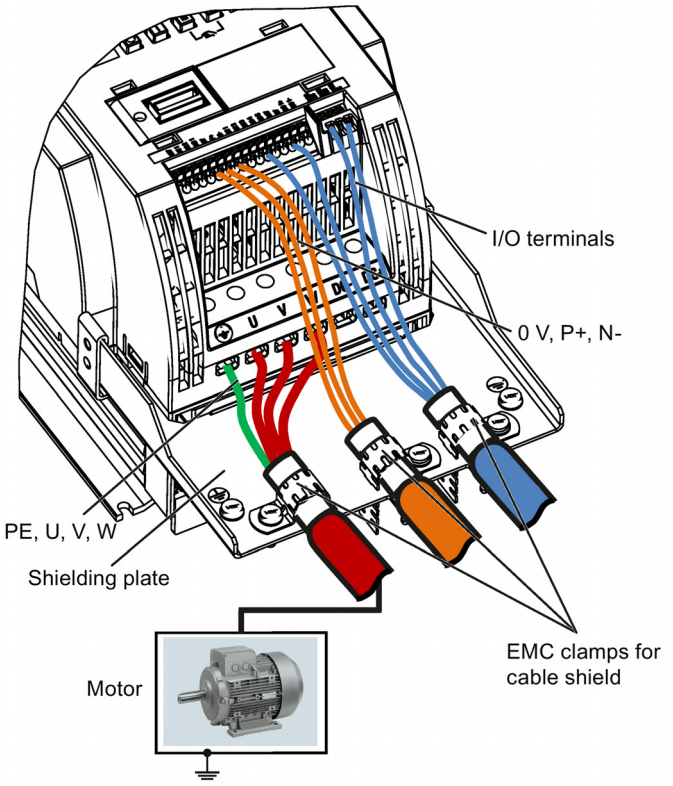

NOTICE
Inverter damage due to improper mains disconnection Improper mains disconnection can cause inverter damage. Do not perform mains diconnection on the motor-side of the system if the inverter is in operation and the output current is not zero.

Note

Cable connection

Separate the control cables from the power cables as much as possible.

Keep the connecting cables away from rotating mechanical parts.

EMC-compliant installation of external line filter options

All 400 V inverters must be mounted in a cabinet with a special EMC gasket around the door.

All the following ferrite cores are recommended in accordance with EN 55011.

For 400 V unfiltered frame size B inverters fitted with the filters specified in Section B.1.7:

To meet the radiated and conducted emissions Class A, attach 1 x ferrite core of Type " WeiAiPu V18004", or equivalent in the vicinity of the motor output terminals (U, V, and W, excluding the PE terminal) of the inverter.

For 400 V unfiltered frame size C inverters fitted with the filters specified in Section B.1.7:

To meet the radiated and conducted emissions Class A, attach 1 x ferrite core of Type "Wurth 742-715-4", or equivalent in the vicinity of the inverter mains terminals.

For 400 V unfiltered frame size D inverters fitted with the filters specified in Section B.1.7:

To meet the radiated and conducted emissions Class A, attach 2 x ferrite cores of Type "Wurth 742-715-5" or equivalent in the vicinity of the inverter mains terminals; attach 1x ferrite core of Type "Wurth 742-712-21" or equivalent in the vicinity of the external line filter mains terminals.

For 400 V unfiltered frame size E inverters fitted with the filters specified in Section B.1.7:

To meet the radiated and conducted emissions Class A, attach 1 x ferrite core of Type "Seiwa E04SRM563218" or equivalent in the vicinity of the inverter mains terminals; attach 2 x ferrite cores of Type "Seiwa E04SRM563218" or equivalent in the vicinity of the motor terminals of the inverter.

For 230 V filtered frame size AA/AB inverters:

To meet the radiated and conducted emissions Class B, attach 1 x ferrite core of Type "K3 NF-110-A(N)GY0", or equivalent in the vicinity of the motor output terminals (U, V, and W, excluding the PE terminal) of the inverter; attach 1x ferrite core of Type "K3 NF-110-A(N)GY0" or equivalent on the motor cable outside the threaded hole of the cabinet; attach 2 x ferrite cores of Type "K3 NF-110-A(N)GY0" or equivalent on the motor cable in the vicinity of the motor.

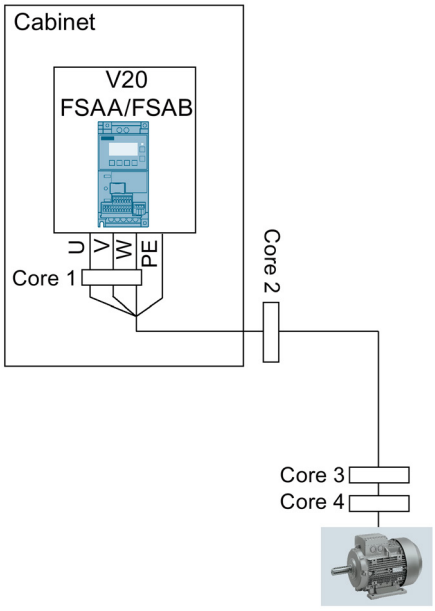

For 230 V filtered and unfiltered frame size AC inverters with the maximum motor cable length of 10 m:

To meet the radiated and conducted emissions Class B, attach 1 x ferrite core of Type "BRH A2 RC 16*28*9 MB", or equivalent in the vicinity of the motor output terminals (U, V, and W, excluding the PE terminal) of the inverter.

For 230 V filtered frame size C inverters:

To meet the radiated and conducted emissions Class A, attach 1 x ferrite core of Type "TDG TPW33", or equivalent in the vicinity of the inverter mains terminals.

Shielding method

The following illustration shows an example with and without the shielding plate.

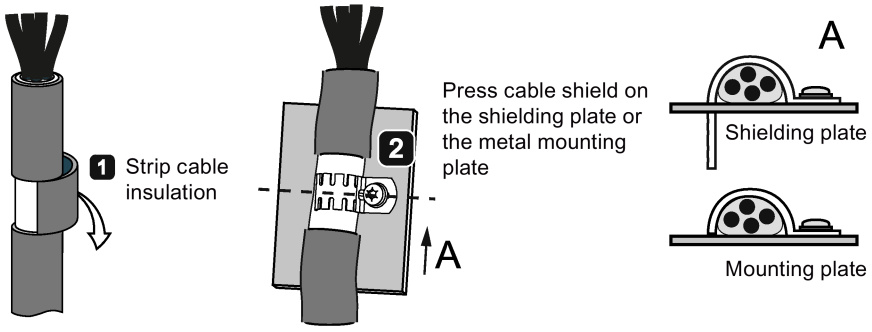

4.4 EMC-compliant cabinet design

The most cost-effective method of implementing interference suppression measures within the control cabinet is to ensure that interference sources and potentially susceptible equipment are installed separately from each other.

The control cabinet has to be divided into EMC zones and the devices within the control cabinet have to be assigned to these zones following the rules below.

- The different zones must be electromagnetically decoupled by using separate metallic housings or grounded separation plates.
- If necessary, filters and/or coupling modules should be used at the interfaces of the zones.
- Cables connecting different zones must be separated and must not be routed within the same cable harness or cable channel.
- All communication (e.g. RS485) and signal cables leaving the cabinet must be shielded.

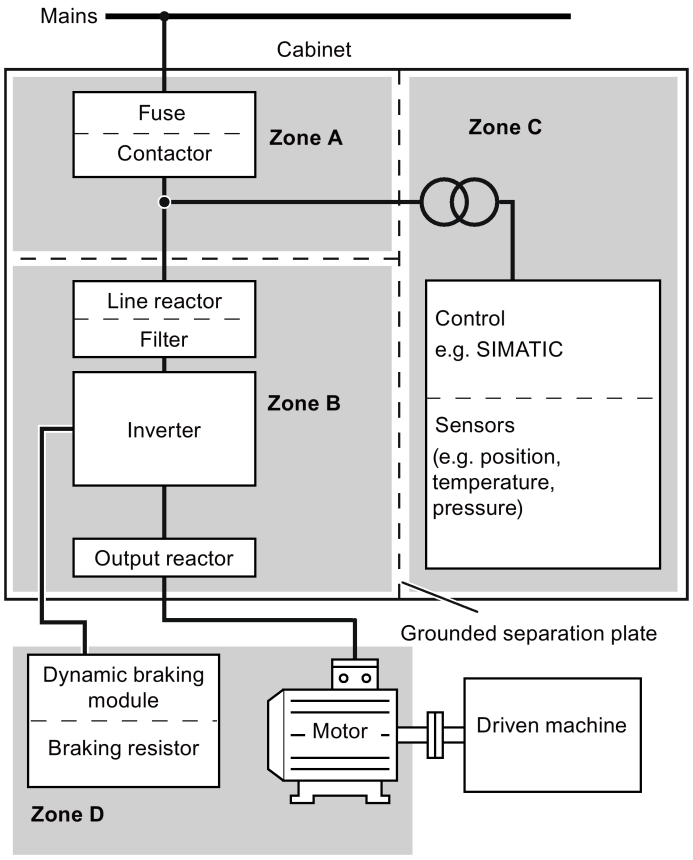
Mains
Cabinet
Fuse
Contactor
Zone A
Zone C
Line reactor
Filter
Zone B
Inverter
Output reactor
Control
e.g. SIMATIC
Sensors
(e.g. position,
temperature,
pressure)
Grounded separation plate
Dynamic braking
module
Braking resistor
Motor
Driven machine
Zone D

Commissioning via the built-in BOP

5

Note

For a detailed description of parameter settings for the quick commissioning, refer to the topic "Quick commissioning (Page 62)".



WARNING

Hot surface

During operation and for a short time after switching-off the inverter, the marked surfaces of the inverter can reach a high temperature. Avoid coming into direct contact with these surfaces.

5.1 The built-in Basic Operator Panel (BOP)

5.1.1 Introduction to the built-in BOP

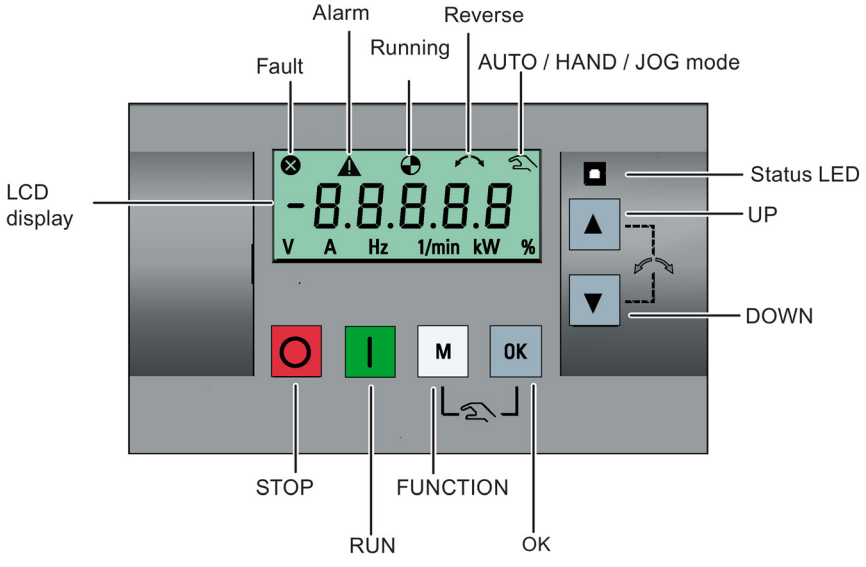

Button functions

O	**Stops the inverter**	
	Single press	OFF1 stop reaction: the inverter brings the motor to a standstill in the ramp-down time set in parameter P1121. **Exception:** The button is inactive if the inverter is configured for control from terminals or USS/MODBUS on RS485 (P0700=2 or P0700=5) in AUTO mode.
	Double press (< 2 s) or long press (> 3 s)	OFF2 stop reaction: the inverter allows the motor to coast to a standstill without using any ramp-down times.
I	**Starts the inverter** If the inverter is started in HAND/JOG/AUTO mode, the inverter running icon (◔) appears. **Exception:** This button is inactive when the inverter is configured for control from terminals or USS/MODBUS on RS485 (P0700=2 or P0700=5) in AUTO mode.	
M	**Multi-function button**	
	Short press (< 2 s)	• Enters the parameter setting menu or moves to the next screen in the setup menu • Restarts the digit by digit editing on the selected item • Returns to the fault code display • If pressed twice in digit by digit editing, returns to the previous screen without changing the item being edited
	Long press (> 2 s)	• Returns to the status screen • Enters the setup menu
OK	Short press (< 2 s)	• Switches between status values • Enters edit value mode or change to the next digit • Clears faults • Returns to the fault code display
	Long press (> 2 s)	• Quick parameter number or value edit • Accesses fault information data
M + OK	**Hand/Jog/Auto** Press to switch between different modes: 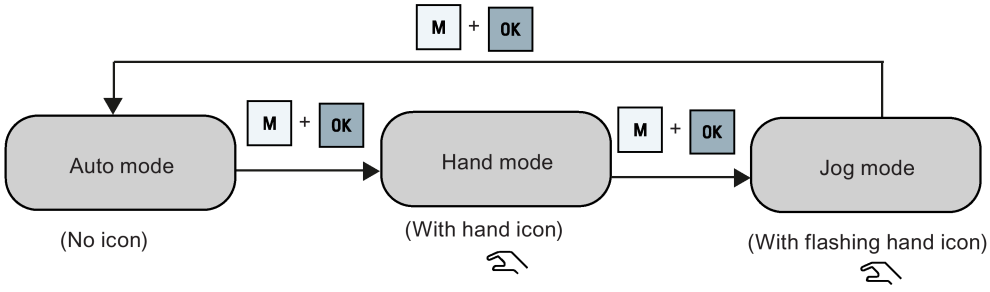 Note: Jog mode is only available if the motor is stopped.	

▲	• When navigating through a menu, it moves the selection up through the screens available. • When editing a parameter value, it increases the displayed value. • When the inverter is in RUN mode, it increases the speed. • Long press (> 2 s) of the key quickly scrolls up through parameter numbers, indices, or values.
▼	• When navigating through a menu, it moves the selection down through the screens available. • When editing a parameter value, it decreases the displayed value. • When the inverter is in RUN mode, it decreases the speed. • Long press (> 2 s) of the key quickly scrolls down through parameter numbers, indices, or values.
▲ + ▼	Reverses the direction of rotation of the motor. Pressing the two keys once activates reverse motor rotation. Pressing the two keys once again deactivates reverse rotation of the motor. The reserve icon (↶) on the display indicates that the output speed is opposite to the setpoint.

Note

Unless otherwise specified, operations of the above keys always indicate short press (< 2 s).

Inverter status icons

⊗	Inverter has at least one pending fault.	
⚠	Inverter has at least one pending alarm.	
◔	◔ :	Inverter is running (motor speed may be 0 rpm).
	◔ (flashing):	Inverter may be energized unexpectedly (for example, in frost protection mode).
↶	Motor rotates in the reversed direction.	
☜	☜ :	Inverter is in HAND mode.
	☜ (flashing):	Inverter is in JOG mode.

5.1.2 Inverter menu structure

Menu	Description
50/60 Hz selection menu	This menu is visible only on first power-up or after a factory reset.
Main menu	
Display menu (default display)	Basic monitoring view of key parameters such as frequency, voltage, current, DC-link voltage, and so on.
Setup menu	Access to parameters for quick commissioning of the inverter system.
Parameter menu	Access to all available inverter parameters.

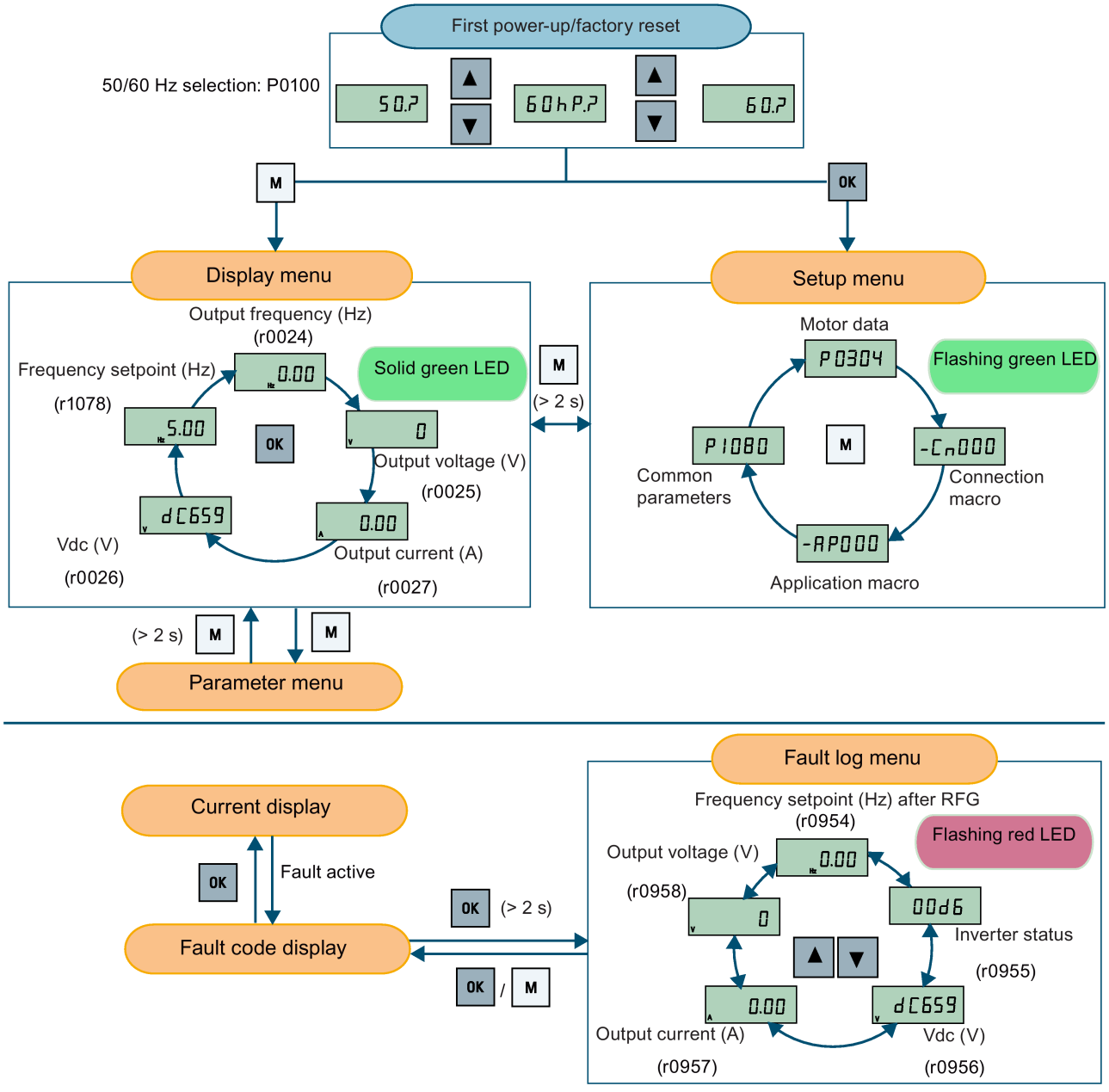
First power-up/factory reset
50/60 Hz selection: P0100
50.?
60hP.?
60.?
M
OK
Display menu
Output frequency (Hz)
(r0024)
Frequency setpoint (Hz)
(r1078)
0.00
Solid green LED
5.00
OK
0
Output voltage (V)
(r0025)
dC659
0.00
Vdc (V)
(r0026)
Output current (A)
(r0027)
(> 2 s)
M
Setup menu
Motor data
P0304
Flashing green LED
P1080
M
-Cn000
Common
parameters
Connection
macro
-AP000
Application macro
(> 2 s)
M
M
Parameter menu
Current display
OK
Fault active
Fault code display
OK
(> 2 s)
OK
/
M
Fault log menu
Frequency setpoint (Hz) after RFG
(r0954)
Flashing red LED
Output voltage (V)
(r0958)
0.00
0
00d6
Inverter status
(r0955)
0.00
dC659
Output current (A)
(r0957)
Vdc (V)
(r0956)

5.1.3 Viewing inverter status

The display menu provides a basic monitoring view of some key parameters such as frequency, voltage, current, and so on.

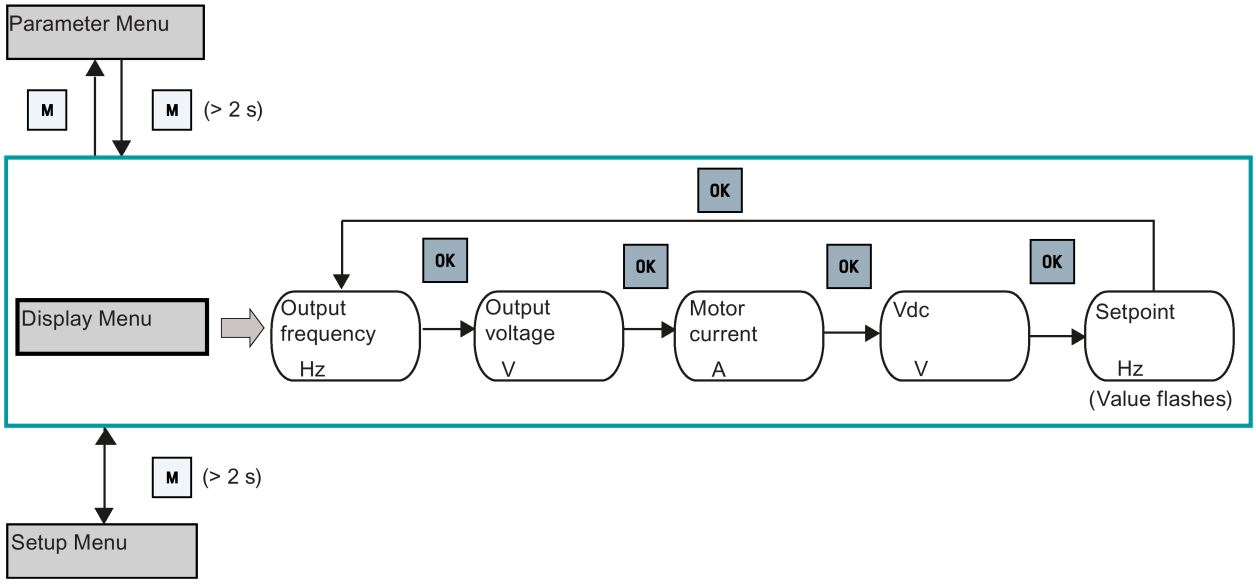

Note

- If you have set P0005 to a non-zero value which represents the parameter number selected in P0005, then the inverter displays the value of the selected parameter in the display menu by default. For more information about normal editing of parameters, see Section "Editing parameters (Page 56)".
- For more information about the display menu structure with active faults, see Section "Faults (Page 323)".

5.1.4 Editing parameters

This section describes how to edit the parameters.

Parameter types

Parameter type		Description
CDS-dependent parameters		• Dependent on Command Data Set (CDS) • Always indexed with [0...2] * • Available for CDS switching via P0810 and P0811
DDS-dependent parameters		• Dependent on Inverter Data Set (DDS) • Always indexed with [0...2] • Available for DDS switching via P0820 and P0821
Other parameters	Multi-indexed parameters	These parameters are indexed with the range of indices dependent on the individual parameter.
	Index-free parameters	These parameters are not indexed.

* Each CDS-dependent parameter has only one default value, despite of their three indices. Exception: By default, P1076[0] and P1076[2] are set to 1 while P1076[1] is set to 0.

Normal editing of parameters

Note

Pressing ▲ or ▼ for longer than two seconds to quickly increase or decrease the parameter numbers or indexes is only possible in the parameter menu.

This editing method is best suited when small changes are required to parameter numbers, indexes, or values.

- To increase or decrease the parameter number, index, or value, press ▲ or ▼ for less than two seconds.
- To quickly increase or decrease the parameter number, index, or value, press ▲ or ▼ for longer than two seconds.
- To confirm the setting, press OK.
- To cancel the setting, press M.

Example:

Editing parameter values

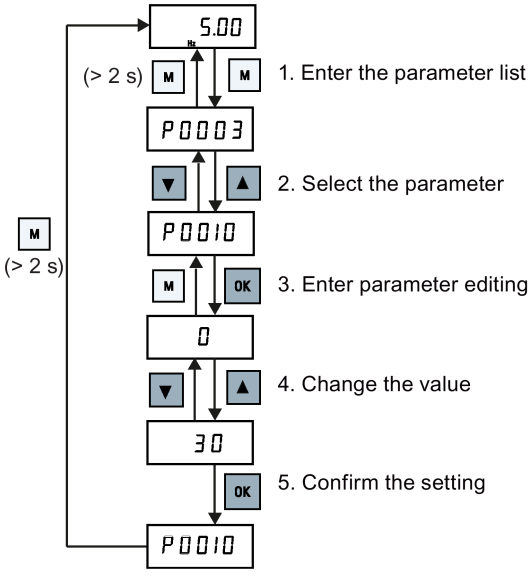

Digit-by-digit editing

Note

Digit-by-digit editing of parameter numbers or indexes is only possible in the parameter menu.

Digit-by-digit editing can be performed on parameter numbers, parameter indexes, or parameter values. This editing method is best suited when large changes are required to parameter numbers, indexes, or values. For information about the inverter menu structure, refer to Section "Inverter menu structure (Page 53)".

- In any edit or scroll mode, digit-by-digit editing is entered by a long press (> 2 s) on OK.
- The digit-by-digit editing always starts with the rightmost digit.
- Each digit is selected in turn by pressing OK.
- Pressing M once moves the cursor to the rightmost digit of the current item.
- Pressing M twice in succession exits the digit-by-digit mode without changing the item being edited.
- Pressing OK on a digit when there are no further digits to the left saves the value.
- **If more digits are required to the left, then these must be added by scrolling the existing leftmost digit above 9 to add more digits to the left.**
- Pressing ▲ or ▼ for over two seconds enters fast digit scrolling.

Example 1: **Editing parameter numbers**	**Example 2:** **Editing parameter indices** If a parameter is an array, edit indices as illustrated below:	**Example 3:** **Editing parameter values**
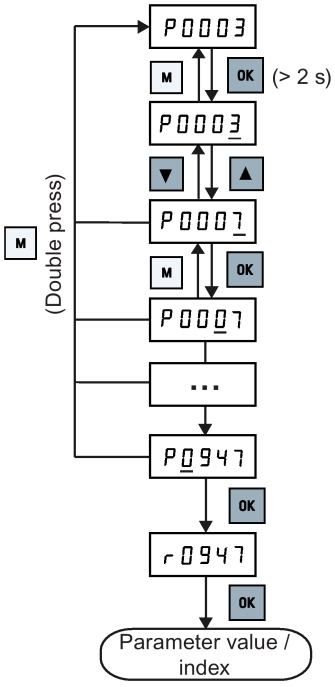	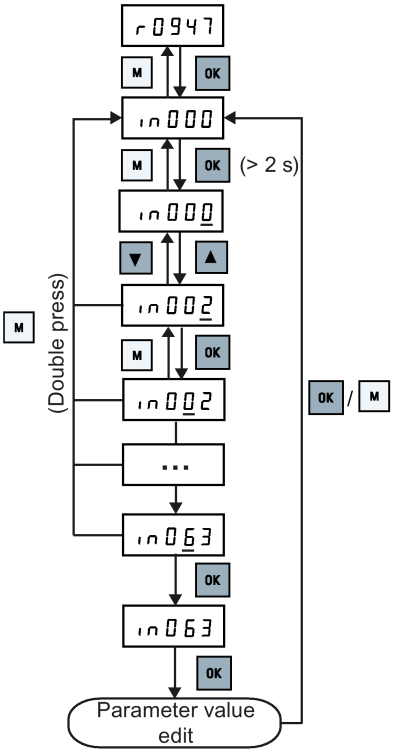	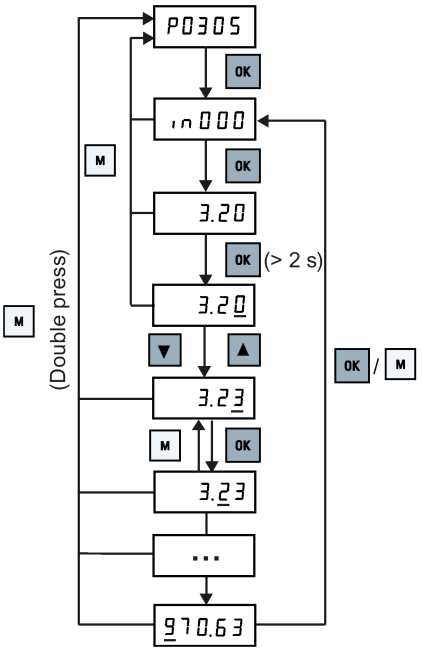

5.1.5 Screen displays

The following two tables show you basic screen displays:

Screen information	**Display**	**Meaning**
"8 8 8 8 8"	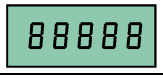	Inverter is busy with internal data processing.
"- - - - -"	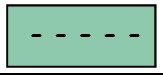	Action not completed or not possible
"Pxxxx"	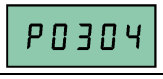	Writable parameter
"rxxxx"		Read-only parameter
"inxxx"		Indexed parameter
Hexadecimal number	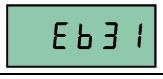	Parameter value in hex format

Screen information	Display	Meaning
"bxx x"	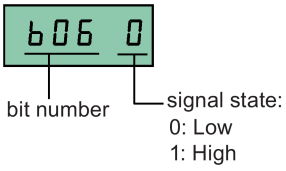	Parameter value in bit format
"Fxxx"	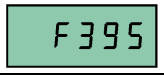	Fault code
"Axxx"	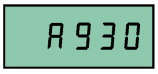	Alarm code
"Cnxxx"		Settable connection macro
"-Cnxxx"		Current selected connection macro
"APxxx"	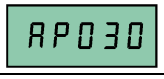	Settable application macro
"-APxxx"		Current selected application macro

"A"	A	"G"	g	"N"	n	"T"	t
"B"	b	"H"	h	"O"	o	"U"	u
"C"	C	"I"	i	"P"	p	"V"	v
"D"	d	"J"	J	"Q"	q	"X"	H
"E"	E	"L"	L	"R"	r	"Y"	y
"F"	F	"M"	n	"S"	S	"Z"	2
0 to 9	0 1 2 3 4 5 6 7 8 9					"?"	.?

5.1.6 LED states

The SINAMICS V20 has only one LED for status indications. The LED can display orange, green, or red.

If more than one inverter state exists, the LED displays in the following order of priority:

- Parameter cloning
- Commissioning mode
- All faults
- Ready (no fault)

For example, if there is an active fault when the inverter is in the commissioning mode, the LED flashes green at 0.5 Hz.

Inverter state	LED color	
Power up	Orange	
Ready (no fault)	Green	
Commissioning mode	Slow flashing green at 0.5 Hz	
All faults	Fast flashing red at 2 Hz	
Parameter cloning	Flashing orange at 1 Hz	

5.2 Checking before power-on

Perform the following checks before you power on the inverter system:

- Check that all cables have been connected correctly and that all relevant product and plant/location safety precautions have been observed.
- Ensure that the motor and the inverter are configured for the correct supply voltage.
- Tighten all screws to the specified tightening torque.

5.3 Setting the 50/60 Hz selection menu

Note

The 50/60 Hz selection menu is visible only on first power-up or after a factory reset (P0970). You can make a selection using the BOP or exit the menu without making a selection, and the menu will not be displayed unless a factory reset is performed.

The motor base frequency also can be selected by changing P0100 to the desired value.

Functionality

This menu is used to set the motor base frequency according to which region of the world that the motor is used in. The menu determines whether power settings (for example, rated motor power P0307) are expressed in [kW] or [hp].

Parameter	Value	Description
P0100	0	Motor base frequency is 50 Hz (**default**) → Europe [kW]
	1	Motor base frequency is 60 Hz → United States/Canada [hp]
	2	Motor base frequency is 60 Hz → United States/Canada [kW]

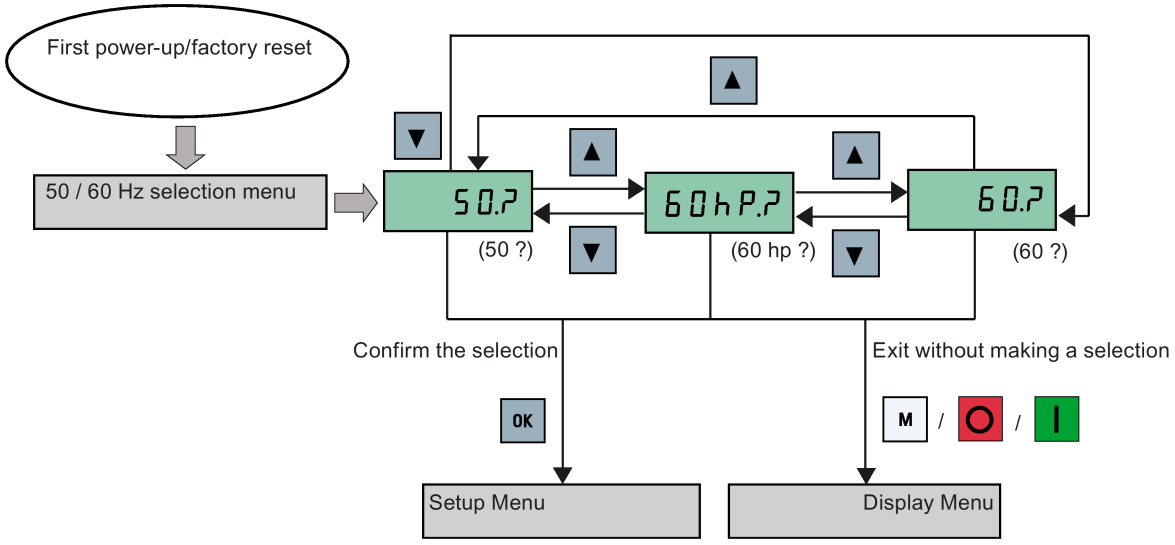

5.4 Starting the motor for test run

This section describes how to start the motor for a test run to check that the motor speed and rotation direction are correct.

Note

To run the motor, the inverter must be in the display menu (default display) and power-on default state with P0700 (selection of command source) = 1.

If you are now in the setup menu (the inverter displays "P0304"), press M for over two seconds to exit the setup menu and enter the display menu.

You can start the motor in HAND or JOG mode.

Starting the motor in HAND mode

1. Press I to start the motor.
2. Press O to stop the motor.

Starting the motor in JOG mode

1. Press M + OK to switch from HAND to JOG mode (the icon flashes).
2. Press I to start the motor. Release I to stop the motor.

5.5 Quick commissioning

5.5.1 Quick commissioning through the setup menu

5.5.1.1 Structure of the setup menu

Functionality of the setup menu

The setup menu guides you through the steps required for quick commissioning of the inverter system. It consists of the following four sub-menus:

	Sub-menu	Functionality
1	Motor data	Sets nominal motor parameters for quick commissioning
2	Connection macro selection	Sets macros required for standard wiring arrangements
3	Application macro selection	Sets macros required for certain common applications
4	Common parameter selection	Sets parameters required for inverter performance optimization

Menu structure

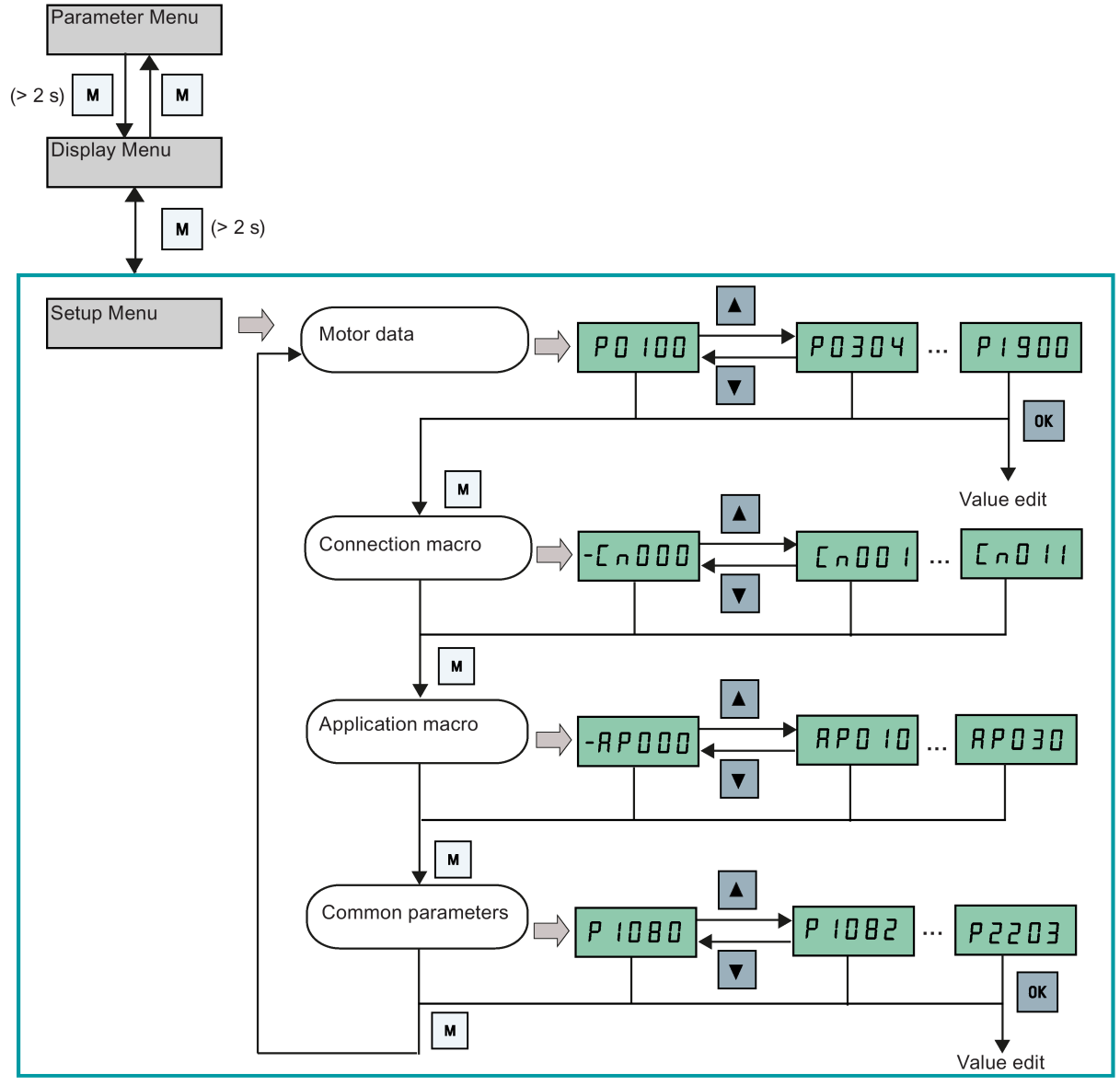

5.5.1.2 Setting motor data

Functionality

This menu is designed for easy setup of nominal motor nameplate data.

Text menu

If you set P8553 to 1, parameter numbers in this menu are replaced with short text.

Setting parameters

Note

In the table below, "●" indicates that the value of this parameter must be entered according to the rating plate of the motor.

Parameter	Access level	Function	Text menu (if P8553 = 1)
P0100	1	**50/60 Hz selection** =0: Europe [kW], 50 Hz (factory default) =1: North America [hp], 60 Hz =2: North America [kW], 60 Hz	 (EU - US)
P0304[0] ●	1	**Rated motor voltage [V]** Note that the input of rating plate data must correspond with the wiring of the motor (star/delta)	 (MOT V)
P0305[0] ●	1	**Rated motor current [A]** Note that the input of rating plate data must correspond with the wiring of the motor (star/delta)	 (MOT A)
P0307[0] ●	1	**Rated motor power [kW/hp]** If P0100 = 0 or 2, motor power unit = [kW] If P0100 = 1, motor power unit = [hp]	P0100 = 0 or 2:  (MOT P) P0100 =1:  (MOT HP)
P0308[0] ●	1	**Rated motor power factor (cosφ)** Visible only when P0100 = 0 or 2	 (M COS)
P0309[0] ●	1	**Rated motor efficiency [%]** Visible only when P0100 = 1 Setting 0 causes internal calculation of value.	 (M EFF)
P0310[0] ●	1	**Rated motor frequency [Hz]**	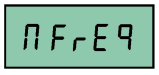 (M FREQ)
P0311[0] ●	1	**Rated motor speed [RPM]**	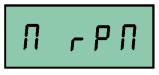 (M RPM)
P1900	2	**Select motor data identification** = 0: Disabled = 2: Identification of all parameters in standstill	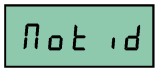 (MOT ID)

5.5.1.3 Setting connection macros

NOTICE

Connection macro settings

When commissioning the inverter, the connection macro setting is a one-off setting. Make sure that you proceed as follows before you change the connection macro setting to a value different from your last setting:

1. Do a factory reset (P0010 = 30, P0970 = 1)
2. Repeat the quick commissioning and change the connection macro

Failure to observe may cause the inverter to accept the parameter settings from both the currently and the previously selected macros, which may lead to undefined and unexplainable inverter operation.

However, communication parameters P2010, P2011, P2021 and P2023 for connection macros Cn010 and Cn011 are not reset automatically after a factory reset. If necessary, reset them manually.

After changing P2023 setting for Cn010 or Cn011, power-cycle the inverter. During the power-cycle, wait until LED has gone off or the display has gone blank (may take a few seconds) before re-applying power.

Note

The wiring diagrams later in this section use PNP control mode as examples.

Functionality

This menu selects which macro is required for standard wiring arrangements. The default one is "Cn000" for connection macro 0.

All connection macros only change the CDS0 (command data set 0) parameters. The CDS1 parameters are used for the BOP control.

Connection macro	Description	Display example
Cn000	Factory default setting. Makes no parameter changes.	  The minus sign indicates that this macro is the currently selected macro.
Cn001	BOP as the only control source	
Cn002	Control from terminals (PNP/NPN)	
Cn003	Fixed speeds	
Cn004	Fixed speed in binary mode	
Cn005	Analog input and fixed frequency	
Cn006	External push button control	
Cn007	External push button with analog setpoint	
Cn008	PID control with analog input reference	
Cn009	PID control with the fixed value reference	
Cn010	USS control	
Cn011	MODBUS RTU control	

Setting connection macros

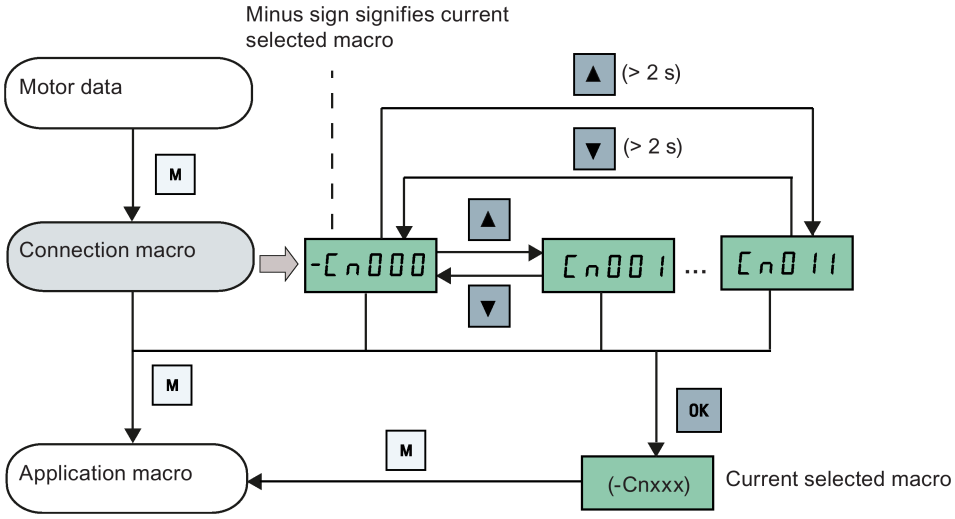

Connection macro Cn001 - BOP as the only control source

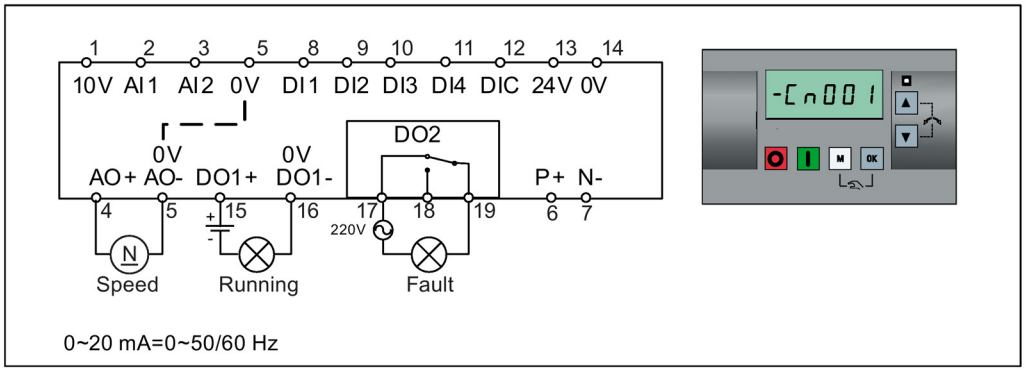

Connection macro settings:

Parameter	Description	Factory default	Default for Cn001	Remarks
P0700[0]	Selection of command source	1	1	BOP
P1000[0]	Selection of frequency	1	1	BOP MOP
P0731[0]	BI: Function of digital output 1	52.3	52.2	Inverter running
P0732[0]	BI: Function of digital output 2	52.7	52.3	Inverter fault active
P0771[0]	CI: Analog output	21	21	Actual frequency
P0810[0]	BI: CDS bit 0 (Hand/Auto)	0	0	Hand mode

Connection macro Cn002 - Control from terminals (PNP/NPN)

External control - Potentiometer with setpoint

Both NPN and PNP can be realized with the same parameters. You can change the connection of the digital input common terminal to 24 V or 0 V to decide the mode.

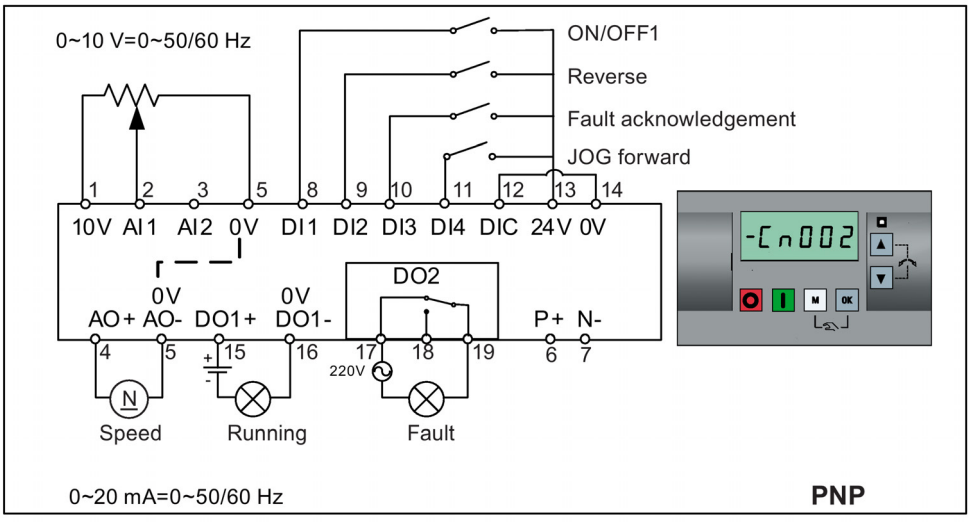

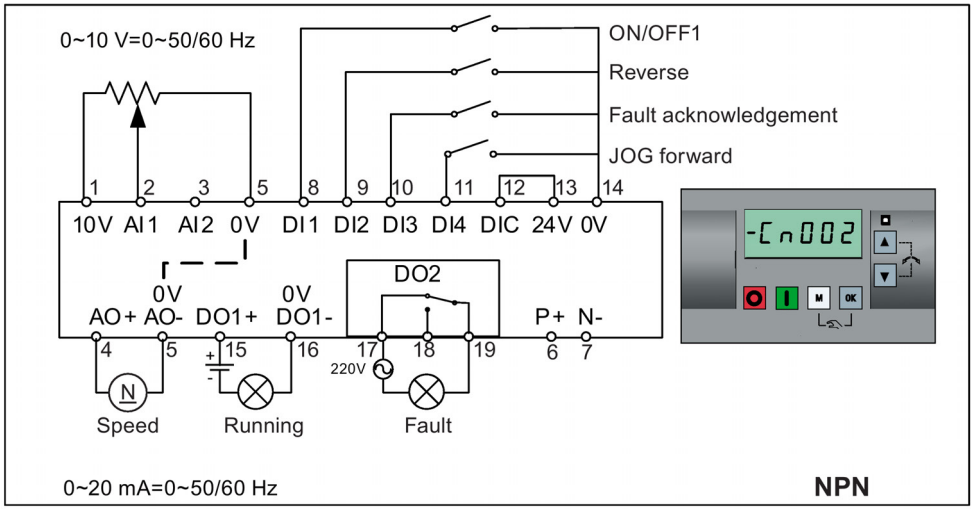

Connection macro settings:

Parameter	Description	Factory default	Default for Cn002	Remarks
P0700[0]	Selection of command source	1	2	Terminal as command source
P1000[0]	Selection of frequency	1	2	Analog as speed setpoint
P0701[0]	Function of digital input 1	0	1	ON/OFF
P0702[0]	Function of digital input 2	0	12	Reverse
P0703[0]	Function of digital input 3	9	9	Fault acknowledgement
P0704[0]	Function of digital input 4	15	10	JOG forward
P0771[0]	CI: Analog output	21	21	Actual frequency
P0731[0]	BI: Function of digital output 1	52.3	52.2	Inverter running
P0732[0]	BI: Function of digital output 2	52.7	52.3	Inverter fault active

Connection macro Cn003 - Fixed speeds

Three fixed speeds with ON/OFF1

If more than one fixed frequency is selected at the same time, the selected frequencies are summed, that is, FF1 + FF2 + FF3.

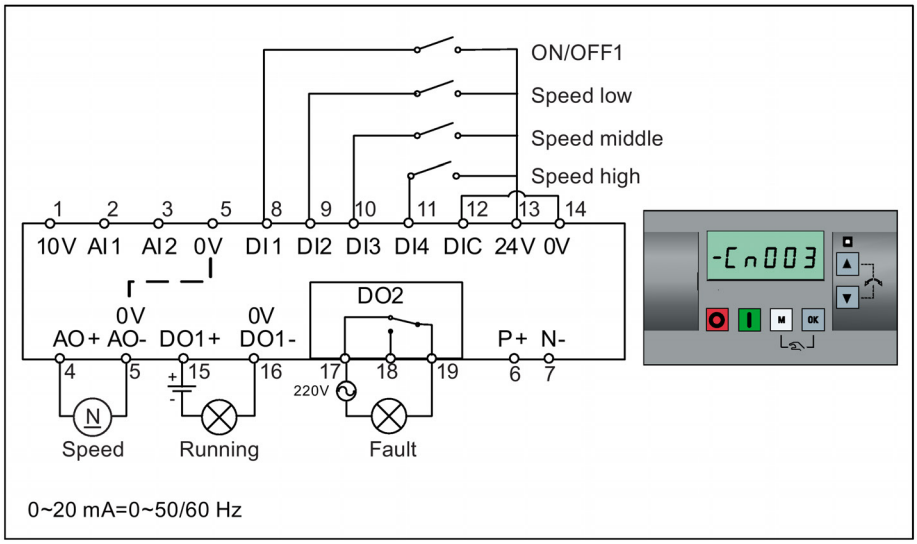

Connection macro settings:

Parameter	Description	Factory default	Default for Cn003	Remarks
P0700[0]	Selection of command source	1	2	Terminal as command source
P1000[0]	Selection of frequency	1	3	Fixed frequency
P0701[0]	Function of digital input 1	0	1	ON/OFF
P0702[0]	Function of digital input 2	0	15	Fixed speed bit 0
P0703[0]	Function of digital input 3	9	16	Fixed speed bit 1
P0704[0]	Function of digital input 4	15	17	Fixed speed bit 2
P1016[0]	Fixed frequency mode	1	1	Direct selection mode
P1020[0]	BI: Fixed frequency selection bit 0	722.3	722.1	DI2
P1021[0]	BI: Fixed frequency selection bit 1	722.4	722.2	DI3
P1022[0]	BI: Fixed frequency selection bit 2	722.5	722.3	DI4
P1001[0]	Fixed frequency 1	10	10	Speed low
P1002[0]	Fixed frequency 2	15	15	Speed middle
P1003[0]	Fixed frequency 3	25	25	Speed high
P0771[0]	CI: Analog output	21	21	Actual frequency
P0731[0]	BI: Function of digital output 1	52.3	52.2	Inverter running
P0732[0]	BI: Function of digital output 2	52.7	52.3	Inverter fault active

Connection macro Cn004 - Fixed speeds in binary mode

Fixed speeds with ON command in binary mode

Up to 16 different fixed frequency values (0 Hz, P1001 to P1015) can be selected by the fixed frequency selectors (P1020 to P1023). For more information about the fixed frequencies in binary mode, see the parameter descriptions of P1001 to P1016 in Section "Parameter list (Page 187)".

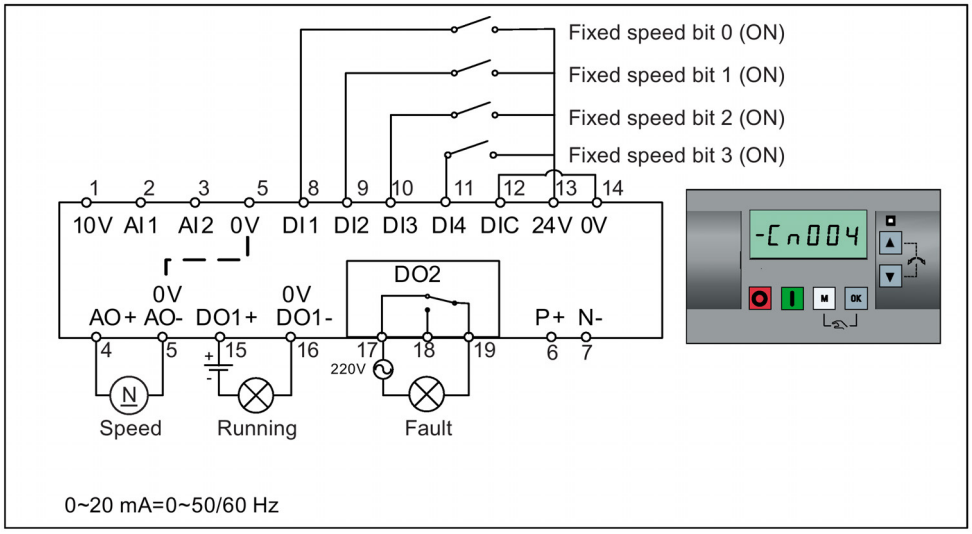

Connection macro settings:

Parameter	Description	Factory default	Default for Cn004	Remarks
P0700[0]	Selection of command source	1	2	Terminals as command source
P1000[0]	Selection of frequency	1	3	Fixed frequency
P0701[0]	Function of digital input 1	0	15	Fixed speed bit 0
P0702[0]	Function of digital input 2	0	16	Fixed speed bit 1
P0703[0]	Function of digital input 3	9	17	Fixed speed bit 2
P0704[0]	Function of digital input 4	15	18	Fixed speed bit 3
P1001[0]	Fixed frequency 1	10	10	Fixed speed 1
P1002[0]	Fixed frequency 2	15	15	Fixed speed 2
P1003[0]	Fixed frequency 3	25	25	Fixed speed 3
P1004[0]	Fixed frequency 4	50	50	Fixed speed 4
P1016[0]	Fixed frequency mode	1	2	Binary mode
P0840[0]	BI: ON/OFF1	19.0	1025.0	Inverter starts at the fixed speed selected
P1020[0]	BI: Fixed frequency selection bit 0	722.3	722.0	DI1
P1021[0]	BI: Fixed frequency selection bit 1	722.4	722.1	DI2
P1022[0]	BI: Fixed frequency selection bit 2	722.5	722.2	DI3
P1023[0]	BI: Fixed frequency selection bit 3	722.6	722.3	DI4
P0771[0]	CI: Analog output	21	21	Actual frequency
P0731[0]	BI: Function of digital output 1	52.3	52.2	Inverter running
P0732[0]	BI: Function of digital output 2	52.7	52.3	Inverter fault active

Connection macro Cn005 - Analog input and fixed frequency

The analog input works as an additional setpoint.

If digital input 2 and digital input 3 are active together, the selected frequencies are summed, that is, FF1 + FF2.

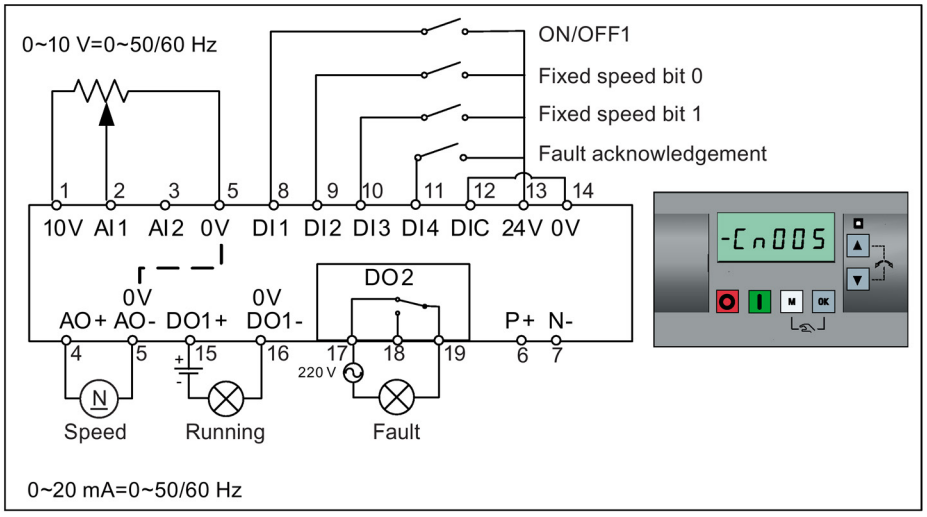

Function diagram

When the fixed speed is selected, the additional setpoint channel from the analog is disabled. If there is no fixed speed setpoint, the setpoint channel connects to the analog input.

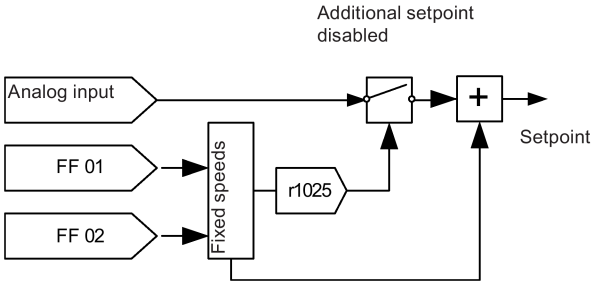

Connection macro settings:

Parameter	Description	Factory default	Default for Cn005	Remarks
P0700[0]	Selection of command source	1	2	Terminals as command source
P1000[0]	Selection of frequency	1	23	Fixed frequency + analog setpoint
P0701[0]	Function of digital input 1	0	1	ON/OFF
P0702[0]	Function of digital input 2	0	15	Fixed speed bit 0
P0703[0]	Function of digital input 3	9	16	Fixed speed bit 1
P0704[0]	Function of digital input 4	15	9	Fault acknowledgement
P1016[0]	Fixed frequency mode	1	1	Direct selection mode
P1020[0]	BI: Fixed frequency selection bit 0	722.3	722.1	DI2
P1021[0]	BI: Fixed frequency selection bit 1	722.4	722.2	DI3
P1001[0]	Fixed frequency 1	10	10	Fixed speed 1

Parameter	Description	Factory default	Default for Cn005	Remarks
P1002[0]	Fixed frequency 2	15	15	Fixed speed 2
P1074[0]	BI: Disable additional setpoint	0	1025.0	FF disables the additional setpoint
P0771[0]	CI: Analog output	21	21	Actual frequency
P0731[0]	BI: Function of digital output 1	52.3	52.2	Inverter running
P0732[0]	BI: Function of digital output 2	52.7	52.3	Inverter fault active

Connection macro Cn006 - External push button control

Note that the command sources are pulse signals.

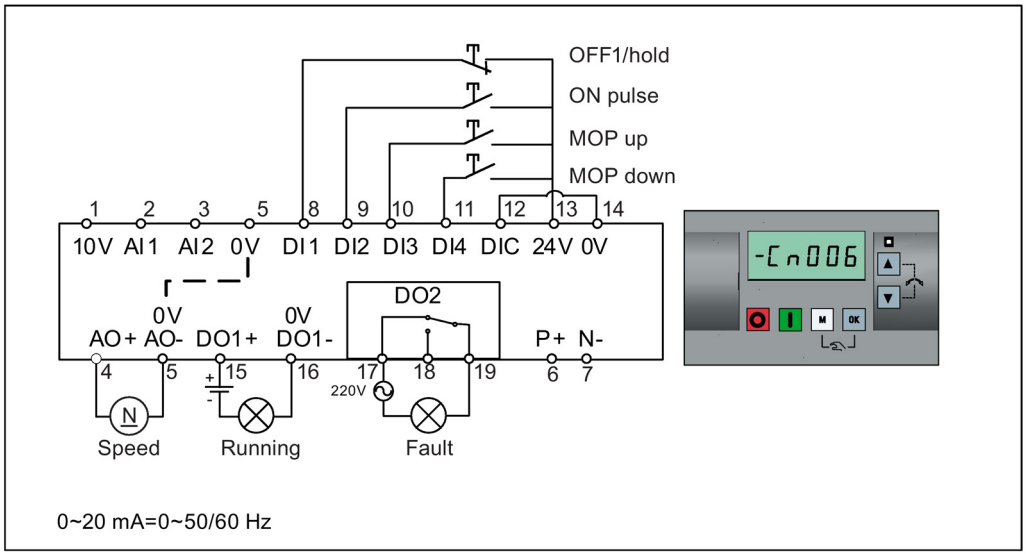

Connection macro settings:

Parameter	Description	Factory default	Default for Cn006	Remarks
P0700[0]	Selection of command source	1	2	Terminals as command source
P1000[0]	Selection of frequency	1	1	MOP as setpoint
P0701[0]	Function of digital input 1	0	2	OFF1/hold
P0702[0]	Function of digital input 2	0	1	ON pulse
P0703[0]	Function of digital input 3	9	13	MOP up pulse
P0704[0]	Function of digital input 4	15	14	MOP down pulse
P0727[0]	Selection of 2/3-wire method	0	3	3-wire ON pulse + OFF1/hold + Reverse
P0771[0]	CI: Analog output	21	21	Actual frequency
P0731[0]	BI: Function of digital output 1	52.3	52.2	Inverter running
P0732[0]	BI: Function of digital output 2	52.7	52.3	Inverter fault active
P1040[0]	Setpoint of the MOP	5	0	Initial frequency
P1047[0]	MOP ramp-up time of the RFG	10	10	Ramp-up time from zero to maximum frequency
P1048[0]	MOP ramp-down time of the RFG	10	10	Ramp-down time from maximum frequency to zero

Connection macro Cn007 - External push buttons with analog control

Note that the command sources are pulse signals.

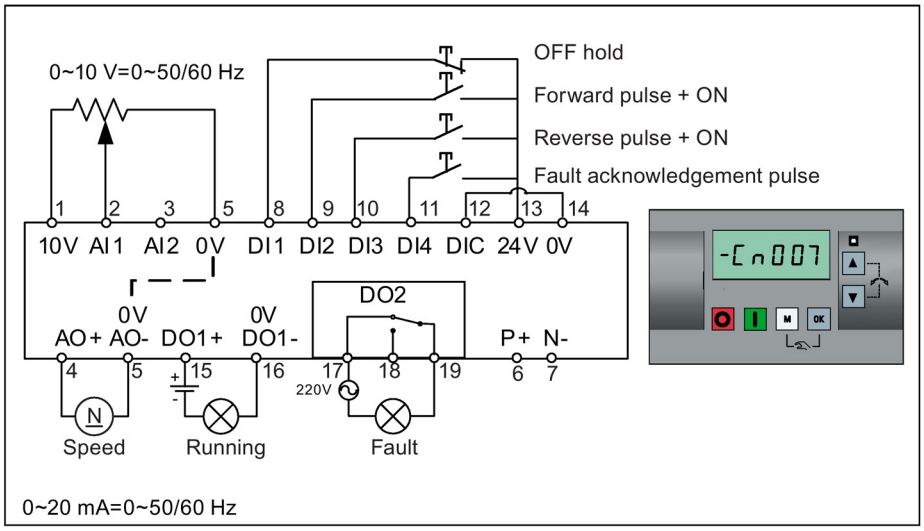

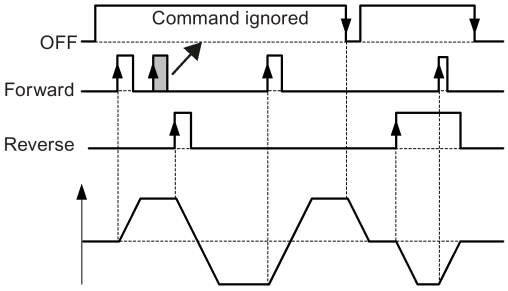

Connection macro settings:

Parameter	Description	Factory default	Default for Cn007	Remarks
P0700[0]	Selection of command source	1	2	Terminals as command source
P1000[0]	Selection of frequency	1	2	Analog
P0701[0]	Function of digital input 1	0	1	OFF hold
P0702[0]	Function of digital input 2	0	2	Forward pulse + ON
P0703[0]	Function of digital input 3	9	12	Reverse pulse + ON
P0704[0]	Function of digital input 4	15	9	Fault acknowledgement
P0727[0]	Selection of 2/3-wire method	0	2	3-wire STOP + Forward pulse + Reverse pulse
P0771[0]	CI: Analog output	21	21	Actual frequency
P0731[0]	BI: Function of digital output 1	52.3	52.2	Inverter running
P0732[0]	BI: Function of digital output 2	52.7	52.3	Inverter fault active

Connection macro Cn008 - PID control with analog reference

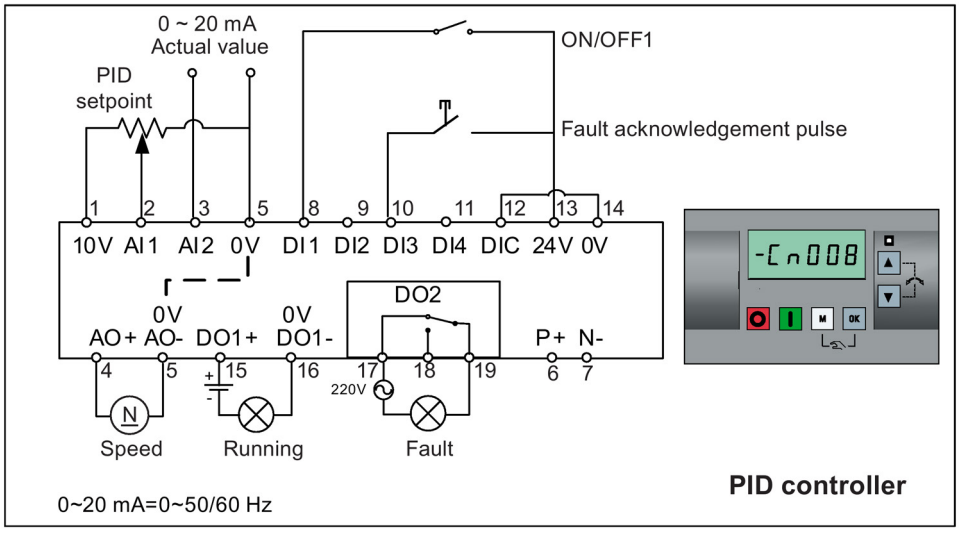

Note

If a negative setpoint for the PID control is desired, change the setpoint and feedback wiring as needed.

When you switch to Hand mode from PID control mode, P2200 becomes 0 to disable the PID control. When you switch it back to Auto mode, P2200 becomes 1 to enable the PID control again.

Connection macro settings:

Parameter	Description	Factory default	Default for Cn008	Remarks
P0700[0]	Selection of command source	1	2	Terminals as command source
P0701[0]	Function of digital input 1	0	1	ON/OFF
P0703[0]	Function of digital input 3	9	9	Fault acknowledgement
P2200[0]	BI: Enable PID controller	0	1	Enable PID
P2253[0]	CI: PID setpoint	0	755.0	PID setpoint = AI1
P2264[0]	CI: PID feedback	755.0	755.1	PID feedback = AI2
P0756[1]	Type of analog input	0	2	AI2, 0 mA to 20 mA
P0771[0]	CI: Analog output	21	21	Actual frequency
P0731[0]	BI: Function of digital output 1	52.3	52.2	Inverter running
P0732[0]	BI: Function of digital output 2	52.7	52.3	Inverter fault active

Connection macro Cn009 - PID control with the fixed value reference

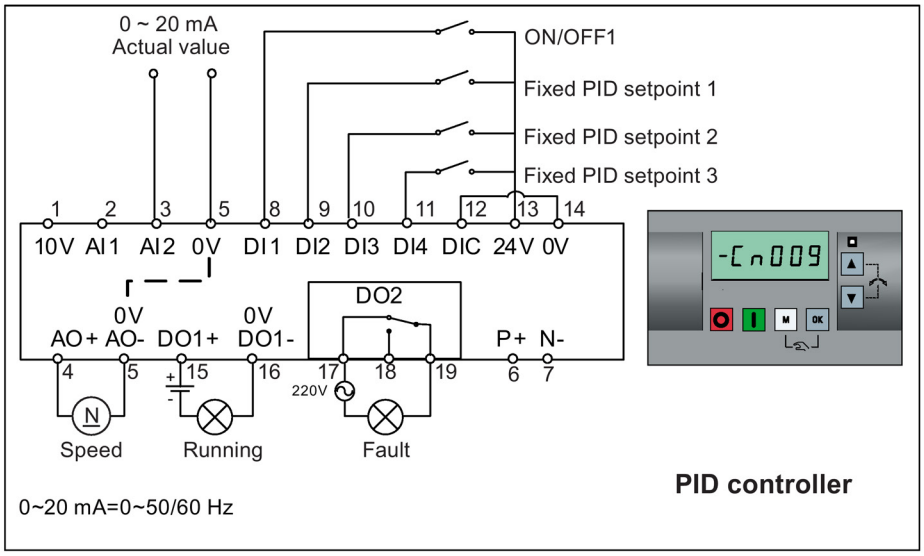

Connection macro settings:

Parameter	Description	Factory default	Default for Cn009	Remarks
P0700[0]	Selection of command source	1	2	Terminals as command source
P0701[0]	Function of digital input 1	0	1	ON/OFF
P0702[0]	Function of digital input 2	0	15	DI2 = PID fixed value 1
P0703[0]	Function of digital input 3	9	16	DI3 = PID fixed value 2
P0704[0]	Function of digital input 4	15	17	DI4 = PID fixed value 3
P2200[0]	BI: Enable PID controller	0	1	Enable PID
P2201[0]	Fixed PID setpoint 1 [%]	10	10	-
P2202[0]	Fixed PID setpoint 2 [%]	20	20	-
P2203[0]	Fixed PID setpoint 3 [%]	50	50	-
P2216[0]	Fixed PID setpoint mode	1	1	Direct selection
P2220[0]	BI: Fixed PID setpoint select bit 0	722.3	722.1	BICO connection DI2
P2221[0]	BI: Fixed PID setpoint select bit 1	722.4	722.2	BICO connection DI3
P2222[0]	BI: Fixed PID setpoint select bit 2	722.5	722.3	BICO connection DI4
P2253[0]	CI: PID setpoint	0	2224	PID setpoint = fixed value
P2264[0]	CI: PID feedback	755.0	755.1	PID feedback = AI2

Connection macro Cn010 - USS control

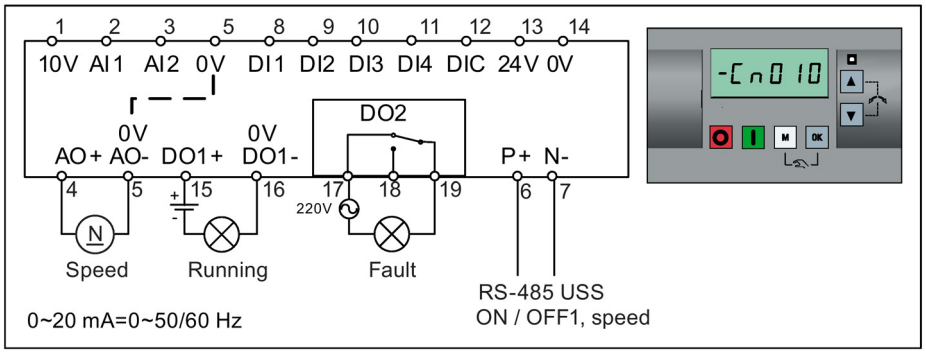

Connection macro settings:

Parameter	Description	Factory default	Default for Cn010	Remarks
P0700[0]	Selection of command source	1	5	RS485 as the command source
P1000[0]	Selection of frequency	1	5	RS485 as the speed setpoint
P2023[0]	RS485 protocol selection	1	1	USS protocol
P2010[0]	USS/MODBUS baudrate	6	8	Baudrate 38400 bps
P2011[0]	USS address	0	1	USS address for inverter
P2012[0]	USS PZD length	2	2	Number of PZD words
P2013[0]	USS PKW length	127	127	Variable PKW words
P2014[0]	USS/MODBUS telegram off time	2000	500	Time to receive data

Connection macro Cn011 - MODBUS RTU control

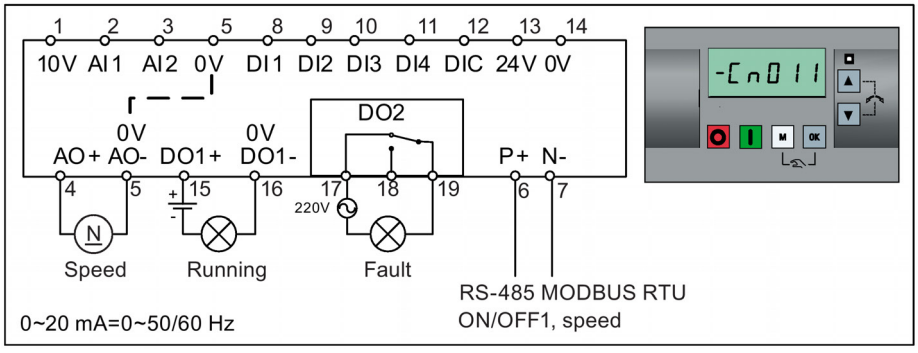

Connection macro settings:

Parameter	Description	Factory default	Default for Cn011	Remarks
P0700[0]	Selection of command source	1	5	RS485 as the command source
P1000[0]	Selection of frequency	1	5	RS485 as the speed setpoint
P2023[0]	RS485 protocol selection	1	2	MODBUS RTU protocol
P2010[0]	USS/MODBUS baudrate	6	6	Baudrate 9600 bps
P2021[0]	MODBUS address	1	1	MODBUS address for inverter

Parameter	Description	Factory default	Default for Cn011	Remarks
P2022[0]	MODBUS reply timeout	1000	1000	Maximum time to send reply back to the master
P2014[0]	USS/MODBUS telegram off time	2000	100	Time to receive data
P2034	MODBUS parity on RS485	2	2	Parity of MODBUS telegrams on RS485
P2035	MODBUS stop bits on RS485	1	1	Number of stop bits in MODBUS telegrams on RS485

5.5.1.4 Setting application macros

NOTICE
Application macro settings When commissioning the inverter, the application macro setting is a one-off setting. Make sure that you proceed as follows before you change the application macro setting to a value different from your last setting: 1. Do a factory reset (P0010 = 30, P0970 = 1) 2. Repeat the quick commissioning and change the application macro Failure to observe may cause the inverter to accept the parameter settings from both the currently and the previously selected macros, which may lead to undefined and unexplainable operation.

Functionality

This menu defines certain common applications. Each application macro provides a set of parameter settings for a specific application. After you select an application macro, the corresponding settings are applied to the inverter to simplify the commissioning process.

The default application macro is "AP000" for application macro 0. If none of the application macros fits your application, select the one that is the closest to your application and make further parameter changes as desired.

Application macro	Description	Display example
AP000	Factory default setting. Makes no parameter changes.	  The minus sign indicates that this macro is the currently selected macro.
AP010	Simple pump applications	
AP020	Simple fan applications	
AP021	Compressor applications	
AP030	Conveyor applications	

Setting application macros

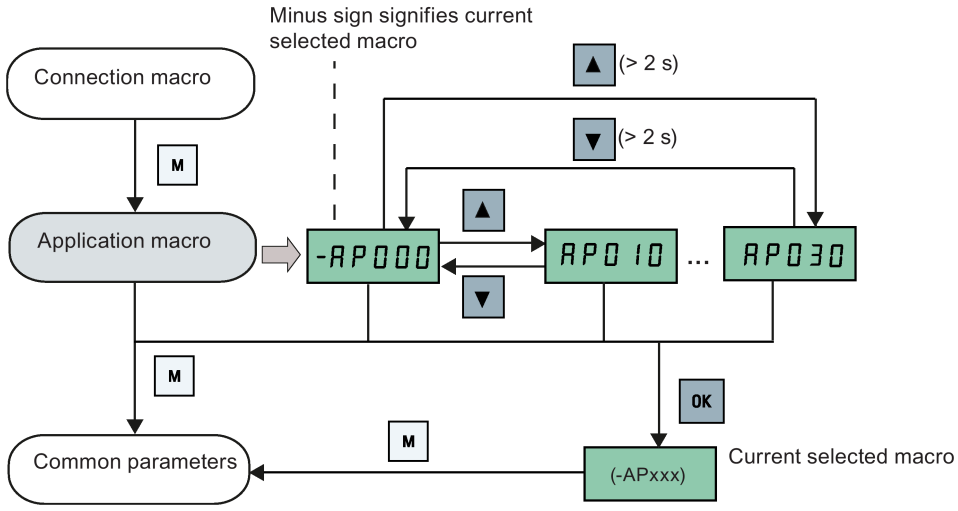

Application macro AP010 - Simple pump applications

Parameter	Description	Factory default	Default for AP010	Remarks
P1080[0]	Minimum frequency	0	15	Inverter running at a lower speed inhibited
P1300[0]	Control mode	0	7	Quadratic V/f
P1110[0]	BI: Inhibit negative frequency setpoint	0	1	Reverse pump rotation inhibited
P1210[0]	Automatic restart	1	2	Restart after mains blackout
P1120[0]	Ramp-up time	10	10	Ramp-up time from zero to maximum frequency
P1121[0]	Ramp-down time	10	10	Ramp-down time from maximum frequency to zero

Application macro AP020 - Simple fan applications

Parameter	Description	Factory default	Default for AP020	Remarks
P1110[0]	BI: Inhibit negative frequency setpoint	0	1	Reverse fan rotation inhibited
P1300[0]	Control mode	0	7	Quadratic V/f
P1200[0]	Flying start	0	2	Search for the speed of the running motor with a heavy inertia load so that the motor runs up to the setpoint
P1210[0]	Automatic restart	1	2	Restart after mains blackout
P1080[0]	Minimum frequency	0	20	Inverter running at a lower speed inhibited
P1120[0]	Ramp-up time	10	10	Ramp-up time from zero to maximum frequency
P1121[0]	Ramp-down time	10	20	Ramp-down time from maximum frequency to zero

Application macro AP021 - Compressor applications

Parameter	Description	Factory default	Default for AP021	Remarks
P1300[0]	Control mode	0	0	Linear V/f
P1080[0]	Minimum frequency	0	10	Inverter running at a lower speed inhibited
P1312[0]	Starting boost	0	30	Boost only effective when accelerating for the first time (standstill)
P1311[0]	Acceleration boost	0	0	Boost only effective when accelerating or braking
P1310[0]	Continuous boost	50	50	Additional boost over the complete frequency range
P1120[0]	Ramp-up time	10	10	Ramp-up time from zero to maximum frequency
P1121[0]	Ramp-down time	10	10	Ramp-down time from maximum frequency to zero

Application macro AP030 - Conveyor applications

Parameter	Description	Factory default	Default for AP030	Remarks
P1300[0]	Control mode	0	1	V/f with FCC
P1312[0]	Starting boost	0	30	Boost only effective when accelerating for the first time (standstill)
P1120[0]	Ramp-up time	10	5	Ramp-up time from zero to maximum frequency
P1121[0]	Ramp-down time	10	5	Ramp-down time from maximum frequency to zero

5.5.1.5 Setting common parameters

Functionality

This menu provides some common parameters for inverter performance optimization.

Text menu

If you set P8553 to 1, parameter numbers in this menu are replaced with short text.

Setting parameters

Parameter	Access level	Function	Text menu (if P8553 = 1)	Parameter	Access level	Function	Text menu (if P8553 =1)
P1080[0]	1	Minimum motor frequency	 (MIN F)	P1001[0]	2	Fixed frequency set-point 1	 (FIX F1)
P1082[0]	1	Maximum motor frequency	 (MAX F)	P1002[0]	2	Fixed frequency set-point 2	 (FIX F2)

Parameter	Access level	Function	Text menu (if P8553 = 1)	Parameter	Access level	Function	Text menu (if P8553 =1)
P1120[0]	1	Ramp-up time	 (RMP UP)	P1003[0]	2	Fixed frequency set-point 3	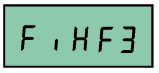 (FIX F3)
P1121[0]	1	Ramp-down time	 (RMP DN)	P2201[0]	2	Fixed PID frequency setpoint 1	 (PID F1)
P1058[0]	2	JOG frequency	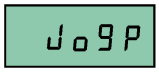 (JOG P)	P2202[0]	2	Fixed PID frequency setpoint 2	 (PID F2)
P1060[0]	2	JOG ramp-up time	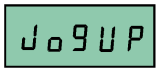 (JOG UP)	P2203[0]	2	Fixed PID frequency setpoint 3	 (PID F3)
P1061[0]	2	JOG ramp-down time	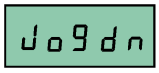 (JOG DN)				

5.5.2 Quick commissioning through the parameter menu

As an alternative to quick commissioning through the setup menu, commissioning using the parameter menu provides the other solution for quick commissioning. This would be helpful for those who are used to commissioning the inverter in this way.

Quick commissioning methods

- **Conventional quick commissioning**

  This method requires you to complete quick commissioning with all the motor data given in the parameter setting table below.

- **Estimated quick commissioning**

  This method provides an easier way to complete quick commissioning with limited motor data. Instead of entering all the motor data, you enter the rated motor power (P0301, in kW) and then the inverter estimates and then sets the values of the rest of the motor data including P0304, P0305, P0307, P0308, P0310 and P0311.

Restrictions on the estimated quick commissioning:

- This functionality is recommended at the rated supply voltage.
- This functionality is designed around the data for Siemens motors 1LE0001, 1TL0001, 1LE1 and 1LA7 although it may make reasonable approximations for other motor types.
- This functionality gives an estimate of the motor data values; however, if the motor is to operatre near the limits of its capability (rated power and current), then you must carry out the conventional quick commissioning.
- The value calculations only work with motors connected in star configuration and assume the supply frequency is 50 Hz.
- The calculations use the DC link voltage measurement and thus only work if mains is connected.
- The calculations are accurate only for 4-pole motors.
- The 87 Hz characteristic is not supported.

Setting parameters

Note

In the table below, "●" indicates that you must enter the value of this parameter according to the rating plate of the motor when you carry out the conventional quick commissioning.

Parameters for conventional quick commissioning	Parameters for estimated quick commissioning	Function	Setting
P0003 = 3	P0003 = 3	User access level	= **3** (Expert access level)
P0010 = 1	P0010 = 1	Commissioning parameter	= **1** (quick commissioning)
P0100	P0100 = 0	50/60 Hz selection	Set a value, if necessary: =0: Europe [kW], 50 Hz (factory default) =1: North America [hp], 60 Hz =2: North America [kW], 60 Hz **Note:** Set this parameter to 0 if you want to carry out the estimated quick commissioning.
P0301 = 0	P0301 > 0	Rated motor power [kW]	Range: 0 to 2000 = 0: Conventional quick commissioning (factory default) > 0: Estimated quick commissioning Once you set this parameter to a non-zero value, you only need to enter the rated motor power and then the inverter calculates and sets the values of the rest of the motor data (P0304, P0305, P0307, P0308, P0310 and P0311).

Parameters for conventional quick commissioning	Parameters for estimated quick commissioning	Function	Setting
P0304[0] •	-	Rated motor voltage [V]	Range: 10 to 2000 **Note:** The input of rating plate data must correspond with the wiring of the motor (star/delta).
P0305[0] •	-	Rated motor current [A]	Range: 0.01 to 10000 **Note:** The input of rating plate data must correspond with the wiring of the motor (star/delta).
P0307[0] •	-	Rated motor power [kW/hp]	Range: 0.01 to 2000.0 **Note:** If P0100 = 0 or 2, motor power unit = [kW] If P0100 = 1, motor power unit = [hp]
P0308[0] •	-	Rated motor power factor (cosφ)	Range: 0.000 to 1.000 **Note:** This parameter is visible only when P0100 = 0 or 2.
P0309[0] •	-	Rated motor efficiency [%]	Range: 0.0 to 99.9 **Note:** Visible only when P0100 = 1 Setting 0 causes internal calculation of value.
P0310[0] •	-	Rated motor frequency [Hz]	Range: 12.00 to 550.00
P0311[0] •	-	Rated motor speed [RPM]	Range: 0 to 40000
P0335[0]	P0335[0]	Motor cooling	Set according to the actual motor cooling method = 0: Self-cooled (factory default) = 1: Force-cooled = 2: Self-cooled and internal fan = 3: Force-cooled and internal fan
P0640[0]	P0640[0]	Motor overload factor [%]	Range: 10.0 to 400.0 (factory default: 150.0) **Note:** The parameter defines motor overload current limit relative to P0305 (rated motor current).
P0700[0]	P0700[0]	Selection of command source	= 0: Factory default setting = 1: Operator panel (factory default) = 2: Terminal = 5: USS/MODBUS on RS485
P1000[0]	P1000[0]	Selection of frequency set-point	Range: 0 to 77 (factory default: 1) = 0: No main setpoint = 1: MOP setpoint = 2: Analog setpoint = 3: Fixed frequency = 5: USS/MODBUS on RS485 = 7: Analog setpoint 2 For additional settings, see Chapter "Parameter list (Page 183)".

Parameters for conventional quick commissioning	Parameters for estimated quick commissioning	Function	Setting
P1080[0]	P1080[0]	Minimum frequency [Hz]	Range: 0.00 to 550.00 (factory default: 0.00) **Note:** The value set here is valid for both clockwise and counter-clockwise rotation.
P1082[0]	P1082[0]	Maximum frequency [Hz]	Range: 0.00 to 550.00 (factory default: 50.00) **Note:** The value set here is valid for both clockwise and counter-clockwise rotation
P1120[0]	P1120[0]	Ramp-up time [s]	Range: 0.00 to 650.00 (factory default: 10.00) **Note:** The value set here means the time taken for motor to accelerate from standstill up to the maximum motor frequency (P1082) when no rounding is used.
P1121[0]	P1121[0]	Ramp-down time [s]	Range: 0.00 to 650.00 (factory default: 10.00) **Note:** The value set here means the time taken for motor to decelerate from the maximum motor frequency (P1082) down to standstill when no rounding is used.
P1300[0]	P1300[0]	Control mode	= 0: V/f with linear characteristic (factory default) = 1: V/f with FCC = 2: V/f with quadratic characteristic = 3: V/f with programmable characteristic = 4: V/f with linear eco = 5: V/f for textile applications = 6: V/f with FCC for textile applications = 7: V/f with quadratic eco = 19: V/f control with independent voltage setpoint
P3900 = 3	P3900 = 3	End of quick commissioning	= 0: No quick commissioning (factory default) = 1: End quick commissioning with factory reset = 2: End quick commissioning = 3: End quick commissioning only for motor data **Note:** After completion of calculation, P3900 and P0010 are automatically reset to their original value 0. The inverter displays "8.8.8.8.8" which indicates that it is busy with internal data processing.
P1900 = 2	P1900 = 2	Select motor data identification	= 0: Disabled (factory default) = 2: Identification of all parameters in standstill

5.6 Function commissioning

5.6.1 Overview of inverter functions

The list below provides an overview of the main functions that the SINAMICS V20 supports. For detailed description of individual parameters, see Chapter "Parameter list (Page 183)".

- 2/3 wire control (P0727)
- 50/60 Hz customization (Page 60) (P0100)
- Adjustable PWM modulation (P1800 to P1803)
- Analog input terminal function control (P0712, P0713, r0750 to P0762)
- Analog output terminal function control (P0773 to r0785)
- Automatic restart (Page 117) (P1210, P1211)
- BICO function (r3978)
- Blockage clearing mode (Page 111) (P3350 to P3353, P3361 to P3364)
- Cavitation protection (Page 126) (P2360 to P2362)
- Command and setpoint source selection (P0700, P0719, P1000 to r1025, P1070 to r1084)
- Command data set (CDS) and inverter data set (DDS) (r0050, r0051, P0809 to P0821)
- Condensation protection (Page 119) (P3854)
- Continuous boost, acceleration boost and starting boost level control (Page 89) (P1310 to P1316)
- DC coupling function (Page 129)
- DC-link voltage control (Page 105) (P0210, P1240 to P1257)
- Digital input terminal function control (P0701 to P0713, r0722, r0724)
- Digital output terminal function control (P0731, P0732, P0747, P0748)
- Dual ramp operation (Page 128) (r1119 to r1199, P2150 to P2166)
- Economy mode (Page 113) (P1300, r1348)
- Energy consumption monitoring (r0039, P0040, P0042, P0043)
- Fault and warning reaction setting (r0944 to P0952, P2100 to P2120, r3113, P3981)
- Flying start (Page 116) (P1200 to r1204)
- Free function blocks (FFBs) (Page 115) (P2800 to P2890)
- Frost protection (Page 118) (P3852, P3853)
- Hammer start mode (Page 109) (P3350 to P3354, P3357 to P3360)
- High/low overload (HO/LO) modes (Page 132) (P0205)

  A new parameter P0205 is added to enable the HO/LO selection for heavy/low load applications.
- Imax control (Page 104) (P1340 to P1346)

- Inverter keep-running operation (P0503)
- Inverter status at fault (Page 323) (r0954, r0955, r0956, r0957 and r0958)

  This function enables you to read the relevant fault information through parameters concerned.
- JOG mode operation (Page 87) (P1055 to P1061)
- List of modified parameters (P0004)

  A new value is added to parameter P0004 to enable the parameter filter which allows you to view the modified parameters.
- MODBUS parity/stop bit selection (P2034, P2035)

  New parameters P2034 and P2035 are added to enable MODBUS parity/stop bit selection.
- Motor blocking, load missing, belt failure detection (Page 106) (P2177 to r2198)
- Motor brake controls (Page 93) (holding brake, DC brake, compound brake and dynamic brake) (P1215 to P1237)
- Motor frequency display scaling (P0511, r0512)
- Motor staging (Page 123) (P2370 to P2380)
- Motorized potentiometer (MOP) mode selection (P1031 to r1050)
- ON/OFF2 function for digital inputs (P0701)

  A new value is added to parameter P0701 to run the motor with the ON command or cancel the inverter pulses with the OFF2 command.
- Parameter cloning (Page 345) (P0802 to P0804, P8458)
- PID controller (Page 91) (P2200 to P2355)
- Pre-configured connection macros and application macros (P0507, P0717) (see also "Setting connection macros (Page 65)" and "Setting application macros (Page 76)".)
- Programmable V/f coordinates (P1320 to P1333)
- Protection of user-defined parameters (P0011, P0012, P0013)
- Skip frequency and resonance damping (P1091 to P1101, P1338)
- Sleep (hibernation) mode (Page 120) (P2365 to P2367)
- Slip compensation (P1334 to P1338)
- Super torque mode (Page 108) (P3350 to P3356)
- Text menu display (P8553) (see also "Setting motor data (Page 63)" and "Setting common parameters (Page 78)".)
- User access level control (P0003)
- USS/MODBUS communication on RS485 (P2010 to P2037) (Page 169)
- Various stop mode selection (Page 85) (P0840 to P0886)
- Wobble function (Page 122) (P2940 to r2955)

5.6.2 Commissioning basic functions

5.6.2.1 Selecting the stop mode

Functionality

Both the inverter and the user have to respond to a wide range of situations and stop the inverter if necessary. Thus operating requirements as well as inverter protective functions (e.g. electrical or thermal overload), or rather man-machine protective functions, have to be taken into account. Due to the different OFF functions (OFF1, OFF2, OFF3) the inverter can flexibly respond to the mentioned requirements. Note that after an OFF2/OFF3 command, the inverter is in the state "ON inhibit". To switch the motor on again, you need a signal low → high of the ON command.

OFF1

The OFF1 command is closely coupled to the ON command. When the ON command is withdrawn, OFF1 is directly activated. The inverter is braked by OFF1 with the ramp-down time P1121. If the output frequency falls below the parameter value P2167 and if the time in P2168 has expired, then the inverter pulses are cancelled.

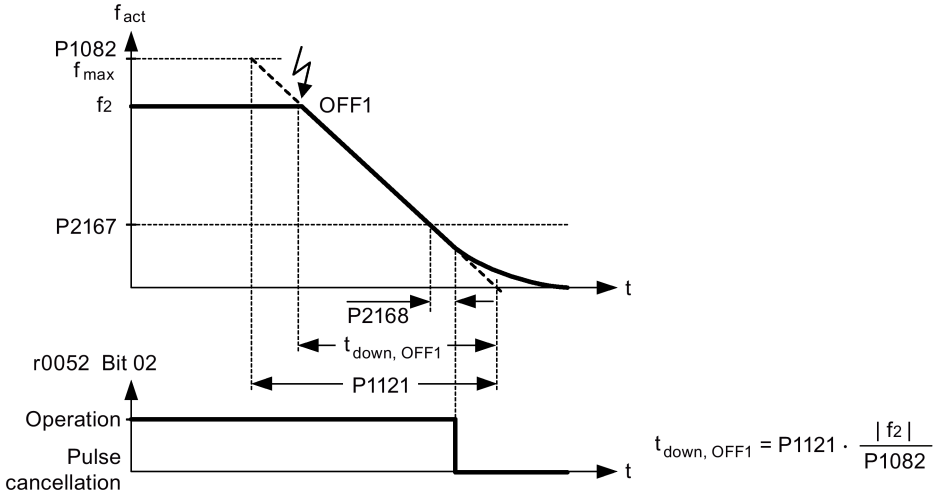

Note

- OFF1 can be entered using a wide range of command sources via BICO parameter P0840 (BI: ON/OFF1) and P0842 (BI: ON/OFF1 with reversing).
- BICO parameter P0840 is pre-assigned by defining the command source using P0700.
- The ON and the following OFF1 command must have the same source.
- If the ON/OFF1 command is set for more than one digital input, then only the digital input, that was last set, is valid.
- OFF1 is active low.
- When various OFF commands are selected simultaneously, the following priority applies: OFF2 (highest priority) – OFF3 – OFF1.
- OFF1 can be combined with DC current braking or compound braking.
- When the motor holding brake MHB (P1215) is activated, for an OFF1, P2167 and P2168 are not taken into account.

OFF2

The inverter pulses are immediately cancelled by the OFF2 command. Thus the motor coasts down and it is not possible to stop in a controlled way.

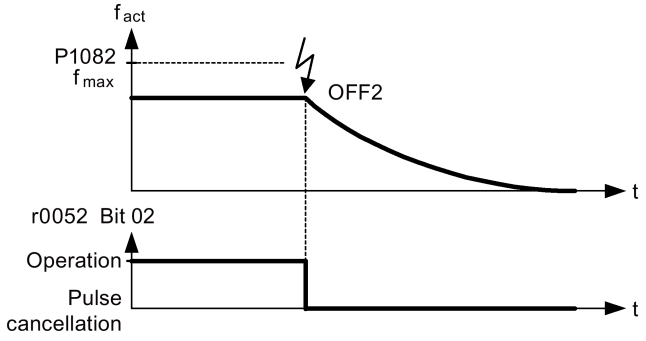

Note

- The OFF2 command can have one or several sources. The command sources are defined using BICO parameters P0844 (BI: 1. OFF2) and P0845 (BI: 2. OFF2).
- As a result of the pre-assignment (default setting), the OFF2 command is set to the BOP. This source is still available even if another command source is defined (e.g. terminal as command source → P0700 = 2 and OFF2 is selected using digital input 2 → P0702 = 3).
- OFF2 is active low.
- When various OFF commands are selected simultaneously, the following priority applies: OFF2 (highest priority) – OFF3 – OFF1.

OFF3

The braking characteristics of OFF3 are identical with those of OFF1 with the exception of the independent OFF3 ramp-down time P1135. If the output frequency falls below parameter value P2167 and if the time in P2168 has expired, then the inverter pulses are cancelled as for the OFF1 command.

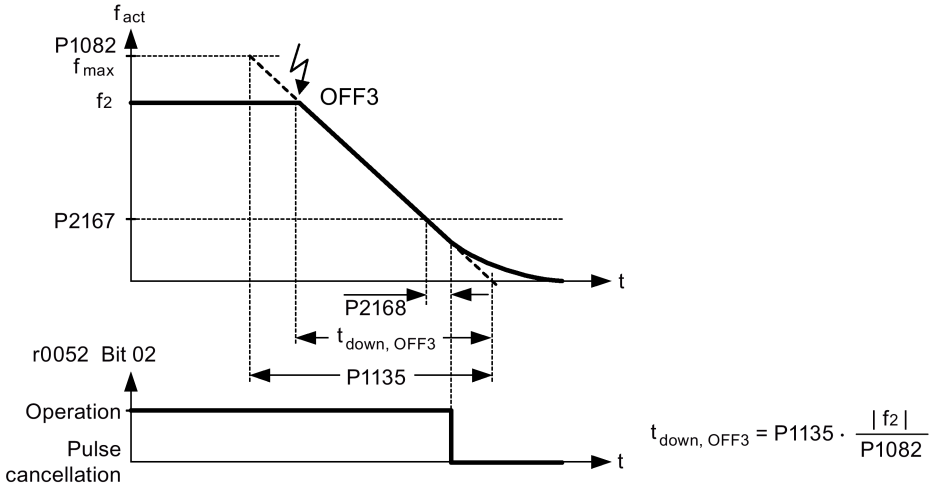

Note

- OFF3 can be entered using a wide range of command sources via BICO parameters P0848 (BI: 1. OFF3) and P0849 (BI: 2. OFF3).
- OFF3 is active low.
- When various OFF commands are selected simultaneously, the following priority applies: OFF2 (highest priority) – OFF3 – OFF1

5.6.2.2 Running the inverter in JOG mode

Functionality

The JOG function can be controlled by either the (built-in) BOP or the digital inputs. When controlled by the BOP, pressing the RUN button will cause the motor to start and rotate at the pre-set JOG frequency (P1058). The motor stops when the RUN button is released.

When using the digital inputs as the JOG command source, the JOG frequency is set by P1058 for JOG right and P1059 for JOG left.

The JOG function allows:

- to check the functionality of the motor and inverter after commissioning has been completed (first traversing motion, checking the direction of rotation, etc.)
- to bring a motor or a motor load into a specific position
- to traverse a motor, e.g. after a program has been interrupted

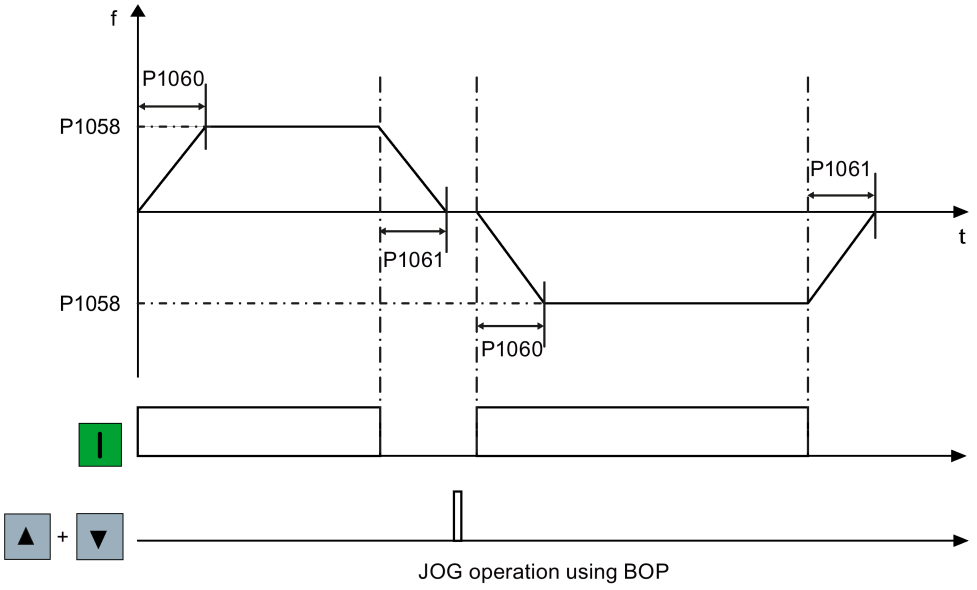

JOG operation using BOP

Setting parameters

Parameter	Function	Setting
P1055[0...2]	BI: Enable JOG right	This parameter defines source of JOG right when P0719 = 0 (Auto selection of command/setpoint source). Factory default: 19.8
P1056[0...2]	BI: Enable JOG left	This parameter defines source of JOG left when P0719 = 0 (Auto selection of command/setpoint source). Factory default: 0
P1057	JOG enable	= 1: Jogging is enabled (default)
P1058[0...2]	JOG frequency [Hz]	This parameter determines the frequency at which the inverter will run while jogging is active. Range: 0.00 to 550.00 (factory default: 5.00)
P1059[0...2]	JOG frequency left [Hz]	This parameter determines the frequency at which the inverter will run while JOG left is selected. Range: 0.00 to 550.00 (factory default: 5.00)
P1060[0...2]	JOG ramp-up time [s]	This parameter sets jog ramp-up time which is used while jogging is active. Range: 0.00 to 650.00 (factory default: 10.00)
P1061[0...2]	JOG ramp-down time [s]	This parameter sets jog ramp-down time which is used while jogging is active. Range: 0.00 to 650.00 (factory default: 10.00)

5.6.2.3 Setting the voltage boost

Functionality

For low output frequencies, the V/f characteristics only give a low output voltage. The ohmic resistances of the stator winding play a role at low frequencies, which are neglected when determining the motor flux in V/f control. This means that the output voltage can be too low in order to:

- implement the magnetization of the asynchronous motor
- hold the load
- overcome losses in the system.

The output voltage can be increased (boosted) in the inverter using the parameters as shown in the table below.

Parameter	Boost type	Description
P1310	Continuous boost [%]	This parameter defines boost level relative to P0305 (rated motor current) applicable to both linear and quadratic V/f curves. Range: 0.0 to 250.0 (factory default: 50.0) The voltage boost is effective over the complete frequency range whereby the value continually decreases at high frequencies. 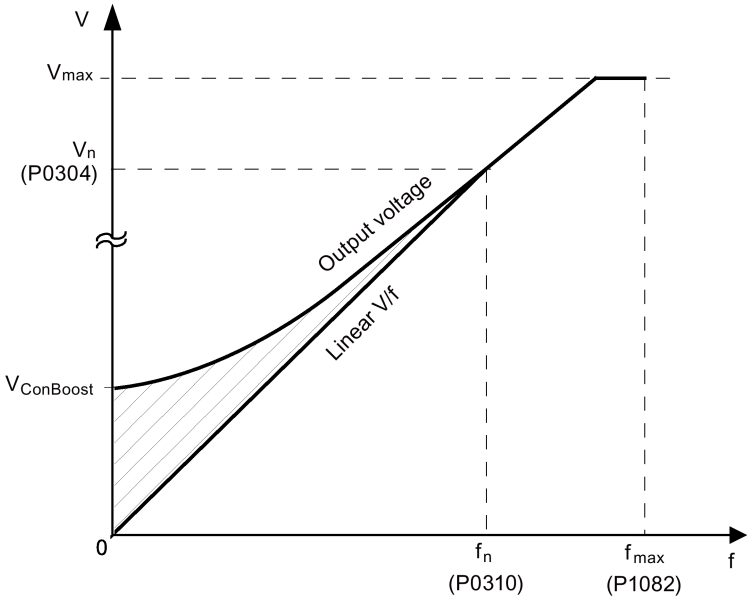

Parameter	Boost type	Description
P1311	Acceleration boost [%]	This parameter applies boost relative to P0305 (rated motor current) following a positive setpoint change and drops back out once the setpoint is reached. Range: 0.0 to 250.0 (factory default: 0.0) The voltage boost is only effective when accelerating or braking. 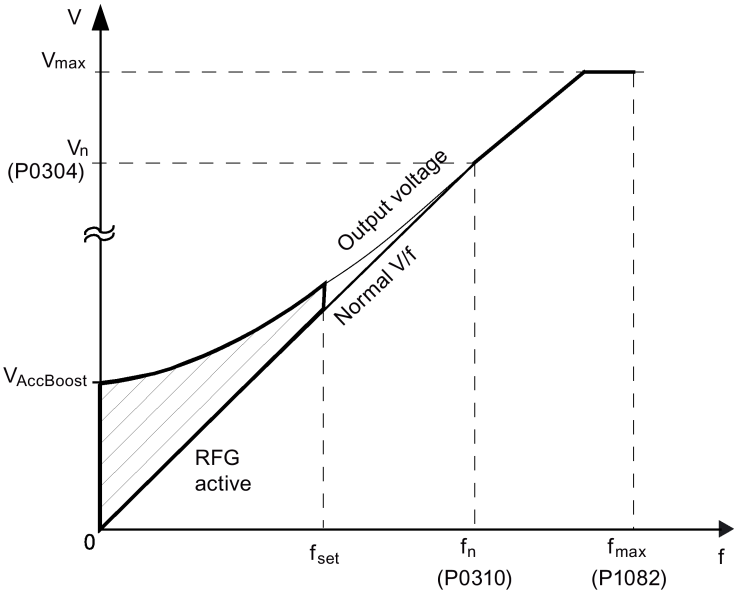
P1312	Starting boost [%]	This parameter applies a constant linear offset relative to P0305 (rated motor current) to active V/f curve (either linear or quadratic) after an ON command and is active until: • ramp output reaches setpoint for the first time respectively • setpoint is reduced to less than present ramp output Range: 0.0 to 250.0 (factory default: 0.0) The voltage boost is only effective when accelerating for the first time (standstill). 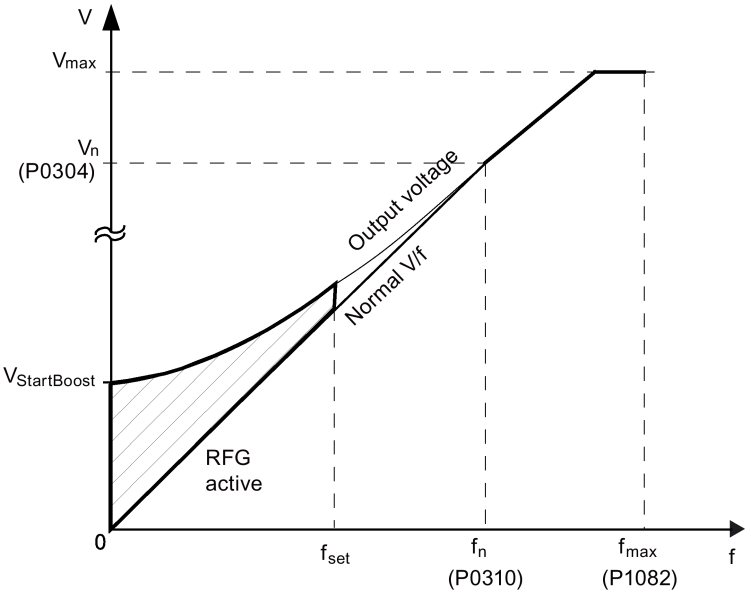

5.6.2.4 Setting the PID controller

Functionality

The integrated PID controller (technology controller) supports all kinds of simple process control tasks, e.g. controlling pressures, levels, or flowrates. The PID controller specifies the speed setpoint of the motor in such a way that the process variable to be controlled corresponds to its setpoint.

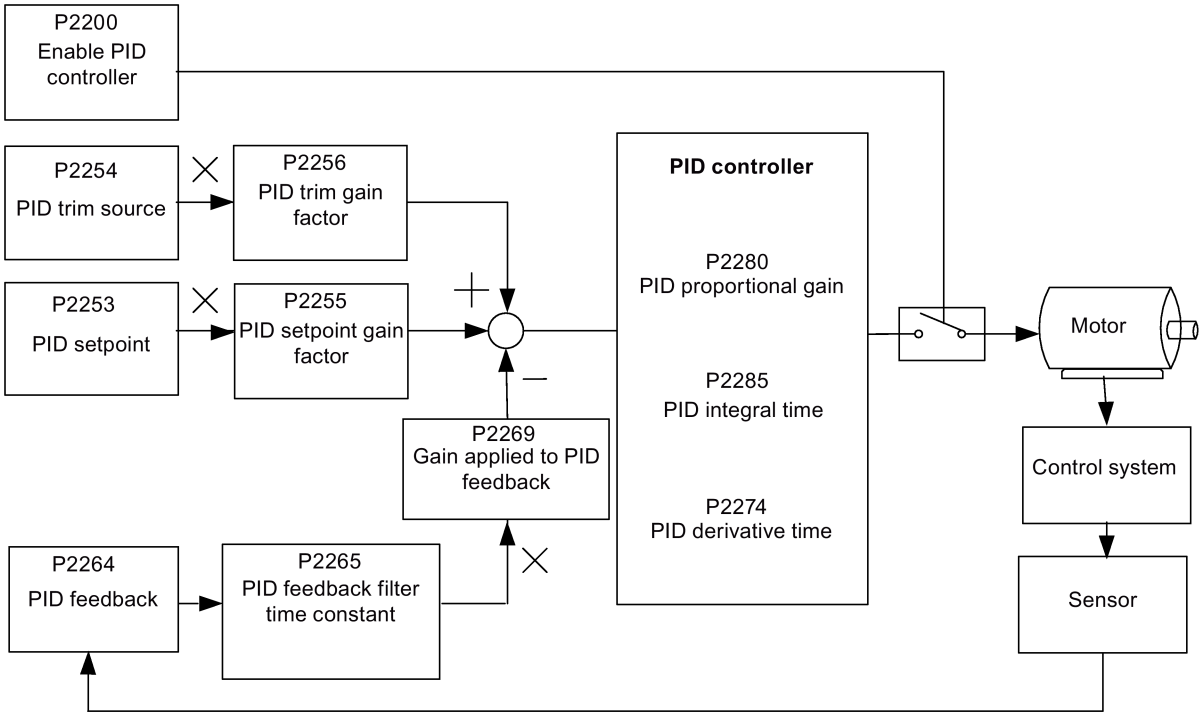

Related parameters for PID controller

Setting parameters

Parameter	Function	Setting
Main function parameters		
P2200[0...2]	BI: Enable PID controller	This parameter allows user to enable/disable the PID controller. Setting to 1 enables the PID closed-loop controller. Setting 1 automatically disables normal ramp times set in P1120 and P1121 and the normal frequency setpoints. Factory default: 0
P2235[0...2]	BI: Enable PID-MOP (UP-cmd)	This parameter defines source of UP command. Possible sources: 19.13 (BOP), 722.x (Digital Input), 2036.13 (USS on RS485)
P2236[0...2]	BI: Enable PID-MOP (DOWN-cmd)	This parameter defines source of DOWN command. Possible sources: 19.14 (BOP), 722.x (Digital Input), 2036.14 (USS on RS485)

Parameter	Function	Setting
Additional commissioning parameters		
P2251	PID mode	= 0: PID as setpoint (factory default) = 1: PID as trim source
P2253[0...2]	CI: PID setpoint	This parameter defines setpoint source for PID setpoint input. Possible sources: 755[0] (Analog input 1), 2018.1 (USS PZD 2), 2224 (Actual fixed PID setpoint), 2250 (Output setpoint of PID-MOP)
P2254[0...2]	CI: PID trim source	This parameter selects trim source for PID setpoint. Possible sources: 755[0] (Analog input 1), 2018.1 (USS PZD 2), 2224 (Actual fixed PID setpoint), 2250 (Output setpoint of PID-MOP)
P2255	PID setpoint gain factor	Range: 0.00 to 100.00 (factory default: 100.00)
P2256	PID trim gain factor	Range: 0.00 to 100.00 (factory default: 100.00)
P2257	Ramp-up time for PID setpoint [s]	Range: 0.00 to 650.00 (factory default: 1.00)
P2258	Ramp-down time for PID setpoint [s]	Range: 0.00 to 650.00 (factory default: 1.00)
P2263	PID controller type	= 0: D component on feedback signal (factory default) = 1: D component on error signal
P2264[0...2]	CI: PID feedback	Possible sources: 755[0] (Analog input 1), 2224 (Actual fixed PID setpoint), 2250 (Output setpoint of PID-MOP) Factory default: 755[0]
P2265	PID feedback filter time constant [s]	Range: 0.00 to 60.00 (factory default: 0.00)
P2267	Maximum value for PID feedback [%]	Range: -200.00 to 200.00 (factory default: 100.00)
P2268	Minimum value for PID feedback [%]	Range: -200.00 to 200.00 (factory default: 0.00)
P2269	Gain applied to PID feedback	Range: 0.00 to 500.00 (factory default: 100.00)
P2270	PID feedback function selector	= 0: Disabled (factory default) = 1: Square root (root(x)) = 2: Square (x*x) = 3: Cube (x*x*x)
P2271	PID transducer type	= 0 : Disabled (factory default) = 1: Inversion of PID feedback signal
P2274	PID derivative time [s]	Range: 0.000 to 60.000 Factory default: 0.000 (the derivative time does not have any effect)
P2280	PID proportional gain	Range: 0.000 to 65.000 (factory default: 3.000)
P2285	PID integral time [s]	Range: 0.000 to 60.000 (factory default: 0.000)
P2291	PID output upper limit [%]	Range: -200.00 to 200.00 (factory default: 100.00)
P2292	PID output lower limit [%]	Range: -200.00 to 200.00 (factory default: 0.00)
P2293	Ramp-up/-down time of PID limit [s]	Range: 0.00 to 100.00 (factory default: 1.00)
P2295	Gain applied to PID output	Range: -100.00 to 100.00 (factory default: 100.00)
P2350	PID autotune enable	= 0: PID autotuning disabled (factory default) = 1: PID autotuning via Ziegler Nichols (ZN) standard = 2: PID autotuning as 1 plus some overshoot (O/S) = 3: PID autotuning as 2 little or no overshoot (O/S) = 4: PID autotuning PI only, quarter damped response
P2354	PID tuning timeout length [s]	Range: 60 to 65000 (factory default: 240)
P2355	PID tuning offset [%]	Range: 0.00 to 20.00 (factory default: 5.00)

Parameter	Function	Setting
Output values		
r2224	CO: Actual fixed PID setpoint [%]	
r2225.0	BO: PID fixed frequency status	
r2245	CO: PID-MOP input frequency of the RFG [%]	
r2250	CO: Output setpoint of PID-MOP [%]	
r2260	CO: PID setpoint after PID-RFG [%]	
P2261	PID setpoint filter time constant [s]	
r2262	CO: Filtered PID setpoint after RFG [%]	
r2266	CO: PID filtered feedback [%]	
r2272	CO: PID scaled feedback [%]	
r2273	CO: PID error [%]	
r2294	CO: Actual PID output [%]	

5.6.2.5 Setting the braking function

Functionality

The motor can be electrically or mechanically braked by the inverter via the following brakes:

- Electrical brakes
  - DC brake
  - Compound brake
  - Dynamic brake
- Mechanical brake
  - Motor holding brake

DC braking

DC braking causes the motor to stop rapidly by applying a DC braking current (current applied also holds shaft stationary). For DC braking, a DC current is impressed in the stator winding which results in a significant braking torque for an asynchronous motor.

DC braking is selected as follows:

- Sequence 1: selected after OFF1 or OFF3 (the DC brake is released via P1233)
- Sequence 2: selected directly with the BICO parameter P1230

Sequence 1

1. Enabled using P1233
2. DC braking is activated with the OFF1 or OFF3 command (see figure below)
3. The inverter frequency is ramped down along the parameterized OFF1 or OFF3 ramp down to the frequency at which DC braking is to start - P1234.
4. The inverter pulses are inhibited for the duration of the de-magnetizing time P0347.
5. The required braking current P1232 is then impressed for the selected braking time P1233. The status is displayed using signal r0053 bit 00.

The inverter pulses are inhibited after the braking time has expired.

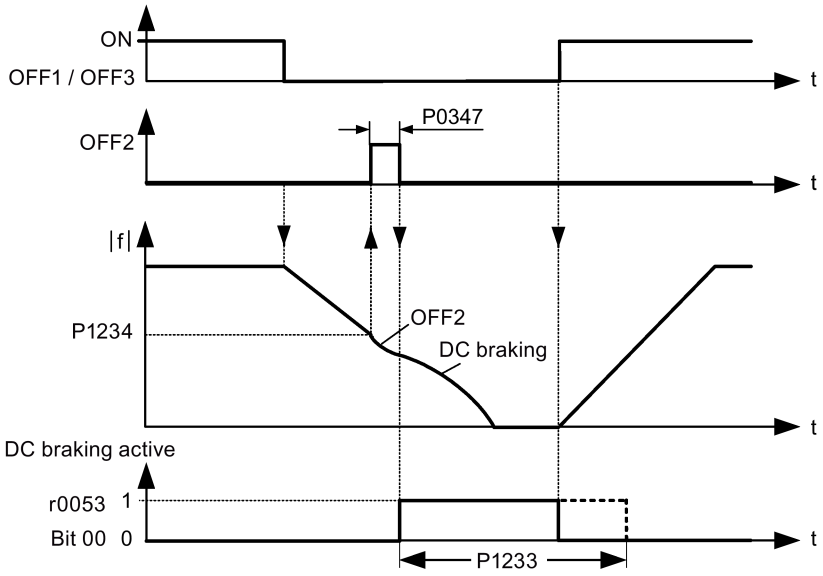

Sequence 2

1. Enabled and selected with the BICO parameter P1230 (see figure below).
2. The inverter pulses are inhibited for the duration of the de-magnetizing time P0347.
3. The requested braking current P1232 is impressed for the time selected and the motor is braked. This state is displayed using signal r0053 bit 00.
4. After DC braking has been cancelled, the inverter accelerates back to the setpoint frequency until the motor speed matches the inverter output frequency.

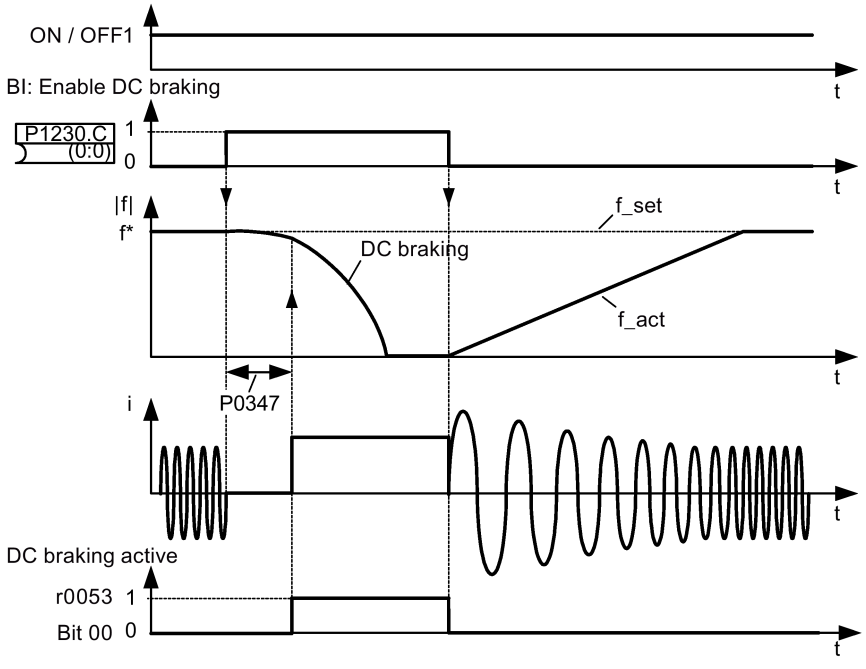

Setting parameters

Parameter	Function	Setting
P1230[0...2]	BI: Enable DC braking	This parameter enables DC braking via a signal applied from an external source. The function remains active while external input signal is active. Factory default: 0
P1232[0...2]	DC braking current [%]	This parameter defines level of DC current relative to rated motor current (P0305). Range: 0 to 250 (factory default: 100)
P1233[0...2]	Duration of DC braking [s]	This parameter defines duration for which DC braking is active following an OFF1 or OFF3 command. Range: 0.00 to 250.00 (factory default: 0.00)
P1234[0...2]	DC braking start frequency [Hz]	This parameter sets the start frequency for DC braking. Range: 0.00 to 550.00 (factory default: 550.00)
P0347[0...2]	Demagnetization time [s]	This parameter changes time allowed after OFF2/fault condition, before pulses can be re-enabled. Range: 0.000 to 20.000 (factory default: 1.000)

⚠ WARNING

Motor overheat

For DC current braking, the motor kinetic energy is converted into thermal energy in the motor. If braking lasts too long, then the motor can overheat.

Note

The "DC braking" function is only practical for induction motors.

DC braking is not suitable to hold suspended loads.

While DC braking, there is no other way of influencing the inverter speed using an external control. When parameterizing and setting the inverter system, it should be tested using real loads as far as possible.

Compound braking

For compound braking (enabled using P1236), DC braking is superimposed with regenerative braking (where the inverter regenerates into the DC-link supply as it brakes along a ramp). Effective braking is obtained without having to use additional components by optimizing the ramp-down time (P1121 for OFF1 or when braking from f1 to f2, P1135 for OFF3) and using compound braking P1236.

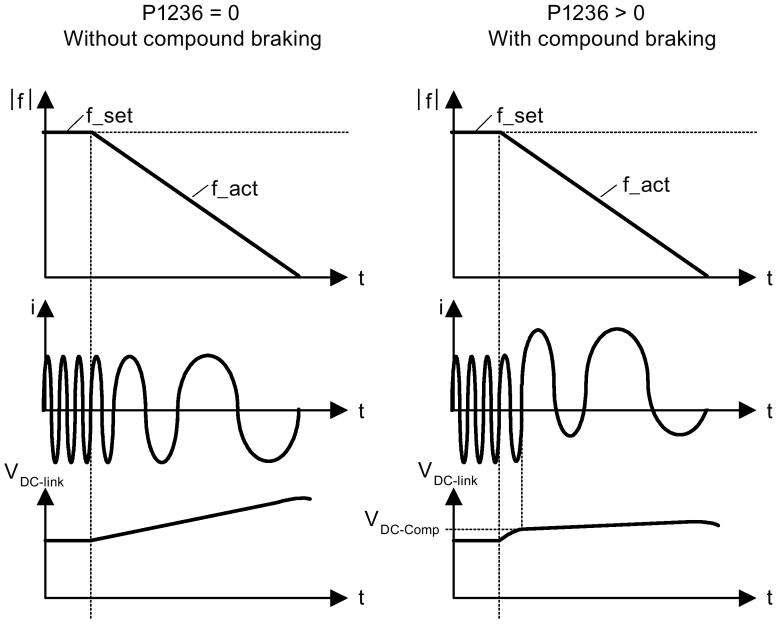

P1254 = 0: $V_{DC\text{-}Comp} = 1.13 \cdot \sqrt{2} \cdot P0210$

P1254 ≠ 0: $V_{DC\text{-}Comp} = 0.98 \cdot r1242$

Setting parameters

Parameter	Function	Setting
P1236[0...2]	Compound braking current [%]	This parameter defines DC level superimposed on AC waveform after exceeding DC-link voltage threshold of compound braking. The value is entered in [%] relative to rated motor current (P0305). Range: 0 to 250 (factory default: 0)
P1254	Auto detect Vdc switch-on levels	This parameter enables/disables auto-detection of switch-on levels for Vdc_max controller. = 0: Disabled = 1: Enabled (factory default) It is recommended to set P1254 = 1 (auto detection of Vdc switch-on levels enabled). Note that auto detection only works when the inverter has been in standby for over 20s.

WARNING

Motor overheat

For compound braking, regenerative braking is superimposed on the DC braking (braking along a ramp). This means that components of the kinetic energy of the motor and motor load are converted into thermal energy in the motor. This can cause the motor to overheat if this power loss is too high or if the brake operation takes too long!

Note

The compound braking depends on the DC link voltage only (see threshold in the above diagram). This will happen on OFF1, OFF3 and any regenerative condition. Compound braking is deactivated, if:

- flying start is active
- DC braking is active.

Dynamic braking

Dynamic braking converts the regenerative energy, which is released when the motor decelerates, into heat. An internal braking chopper or an external dynamic braking module, which can control an external braking resistor, is required for dynamic braking. The inverter or the external dynamic braking module controls the dynamic braking depending on the DC link voltage. Contrary to DC and compound braking, this technique requires that an external braking resistor is installed.

Frame size A / B / C

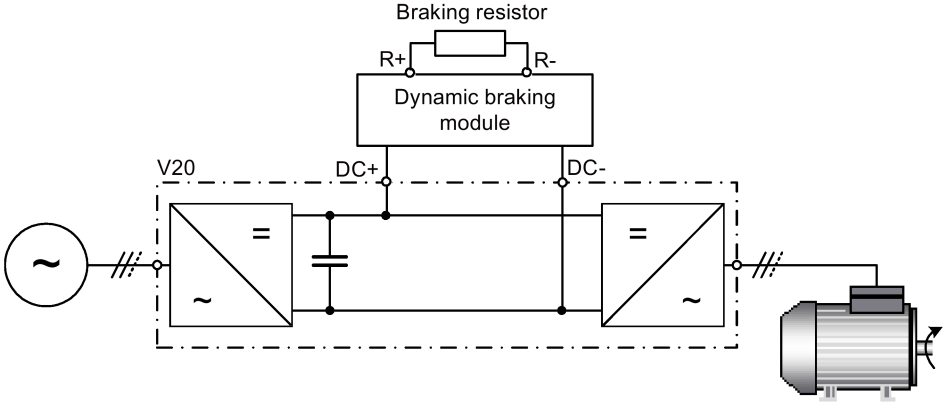

For more information about the dynamic braking module, see Appendix "Dynamic braking module (Page 355)".

Frame size D

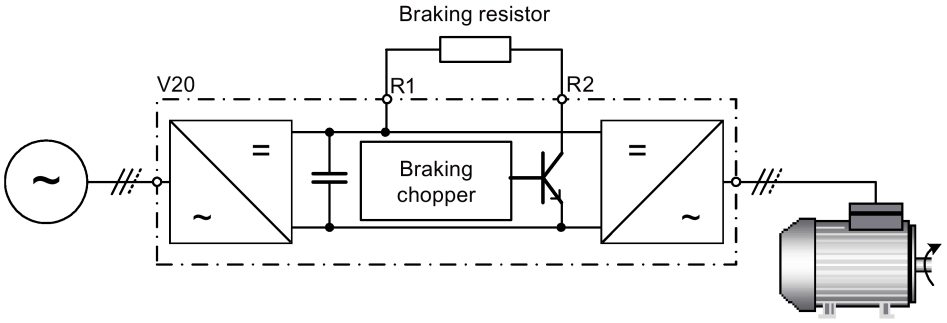

The continuous power P_{DB} and the duty cycle for the braking resistor can be modified using the dynamic braking module (for frame size A/B/C) or parameter P1237 (for frame size D).

NOTICE
Damage to the braking resistor The average power of the dynamic braking module (braking chopper) cannot exceed the power rating of the braking resistor.

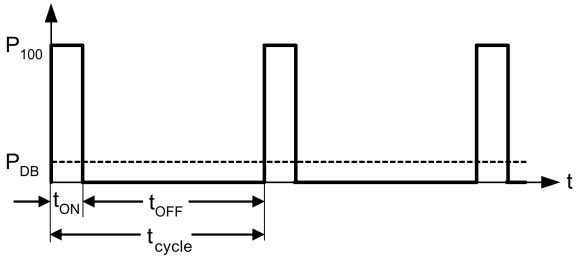

Dynamic braking switch-on level:

P1254 = 0: $V_{DC\text{-}Chopper} = 1.13 \cdot \sqrt{2} \cdot$ P0210

P1254 ≠ 0: $V_{DC\text{-}Chopper} = 0.98 \cdot$ r1242

Duty cycle	t_{ON} (s)	t_{OFF} (s)	t_{cycle} (s)	P_{DB}
5%	12.0	228.0	240.0	0.05
10%	12.6	114.0	126.6	0.10
20%	14.2	57.0	71.2	0.20
50%	22.8	22.8	45.6	0.50
100%	Infinite	0	Infinite	1.00

Setting parameters

Parameter	Function	Setting
P1237	Dynamic braking	This parameter defines the rated duty cycle of the braking resistor (chopper resistor). Dynamic braking is active when the function is enabled and DC-link voltage exceeds the dynamic braking switch-on level. = 0: Disabled (factory default) = 1: 5% duty cycle = 2: 10% duty cycle = 3: 20% duty cycle = 4: 50% duty cycle = 5: 100% duty cycle **Note:** This parameter is only applicable for inverters of frame size D. For frame sizes A to C, the duty cycle of the braking resistor can be selected with the dynamic braking module.
P1240[0...2]	Configuration of Vdc controller	This parameter enables/disables Vdc controller. = 0: Vdc controller disabled **Note:** This parameter must be set to 0 (Vdc controller disabled) to activate the dynamic braking.
P1254	Auto detect Vdc switch-on levels	This parameter enables/disables auto-detection of switch-on levels for Vdc_max controller. = 0: Disabled = 1: Enabled (factory default) It is recommended to set P1254 = 1 (auto detection of Vdc switch-on levels enabled). Note that auto detection only works when the inverter has been in standby for over 20s. When P1240 = 0, P1254 is only applicable for frame size D inverters.

⚠ WARNING

Risks with the use of inappropriate braking resistors

Braking resistors, which are to be mounted on the inverter, must be designed so that they can tolerate the power dissipated. If an unsuitable braking resistor is used, there is a danger of fire and the associated inverter will be significantly damaged.

Motor holding brake

The motor holding brake prevents the motor from undesirable turning when the inverter is switched-off. The inverter has internal logic to control a motor holding brake.

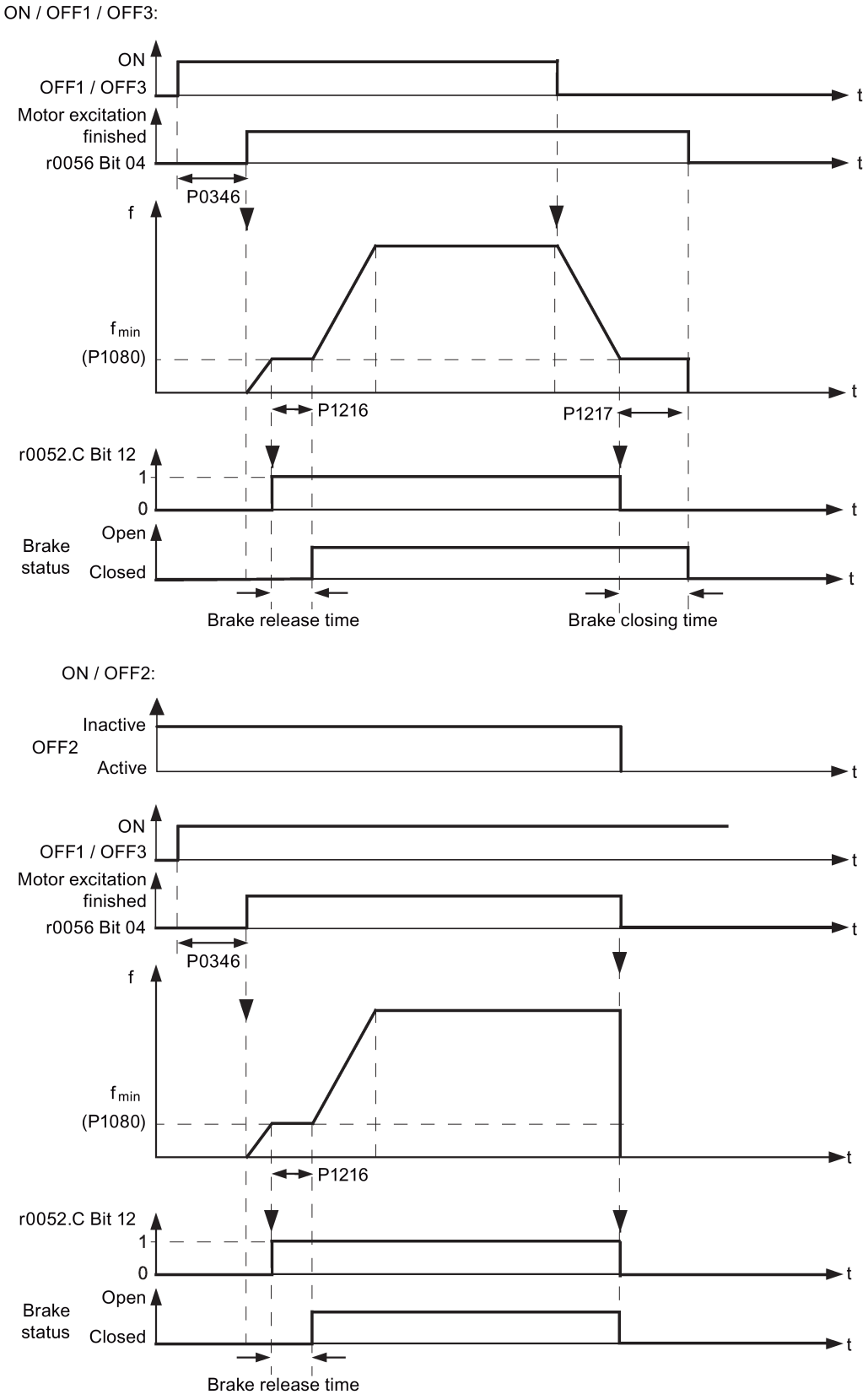
ON / OFF1 / OFF3:
ON
OFF1 / OFF3
t
Motor excitation finished
r0056 Bit 04
t
P0346
f
f min
(P1080)
t
P1216
P1217
r0052.C Bit 12
1
0
t
Brake status
Open
Closed
t
Brake release time
Brake closing time
ON / OFF2:
Inactive
OFF2
Active
t
ON
OFF1 / OFF3
t
Motor excitation finished
r0056 Bit 04
t
P0346
f
f min
(P1080)
t
P1216
r0052.C Bit 12
1
0
t
Brake status
Open
Closed
t
Brake release time

Setting parameters

Parameter	Function	Setting
P1215	Holding brake enable	This parameter enables/disables holding brake function. The motor holding brake (MHB) is controlled via status word 1 r0052 bit 12. = 0: Motor holding brake disabled (factory default) = 1: Motor holding brake enabled
P1216	Holding brake release delay[s]	This parameter defines period during which inverter runs at minimum frequency P1080 before ramping up. Range: 0.0 to 20.0 (factory default: 1.0)
P1217	Holding time after ramp down [s]	This parameter defines time for which inverter runs at minimum frequency (P1080) after ramping down. Range: 0.0 to 20.0 (factory default: 1.0)

Connecting the motor holding brake

The motor holding brake can be connected to the inverter via digital outputs (DO1/DO2). An additional relay is also required to allow the digital output to enable or disable the motor holding brake.

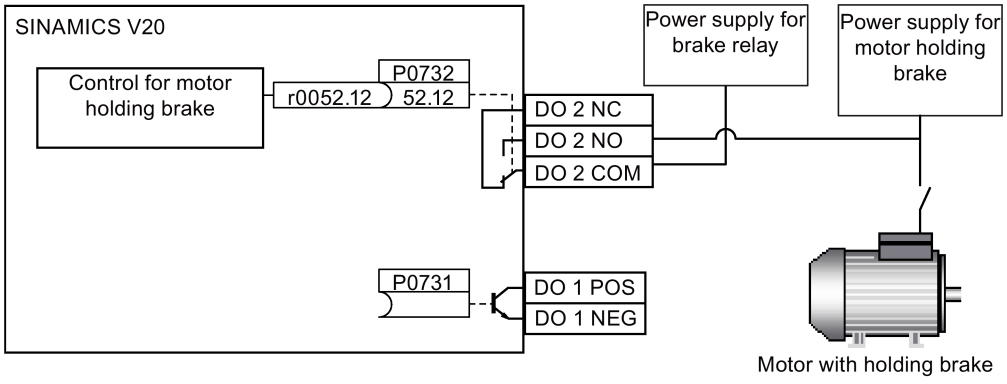

WARNING

Potentially hazardous load

If the inverter controls the motor holding brake, then a commissioning may not be carried out for potentially hazardous loads (e.g. suspended loads for crane applications) unless the load has been secured.

It is not permissible to use the motor holding brake as operating brake. The reason for this is that generally it is only designed for a limited number of emergency braking operations.

5.6.2.6 Setting the ramp time

Functionality

The ramp-function generator in the setpoint channel limits the speed of setpoint changes. This causes the motor to accelerate and decelerate more smoothly, thereby protecting the mechanical components of the driven machine.

Setting ramp-up/down time

- The ramp-up and ramp-down time can be set respectively in P1120 and P1121.
- When the required ramp-up or ramp-down time exceeds the maximum value of P1120 or P1121, you can expand the maximum value by using a scaling factor specified in P1138 or P1139. In this case, calculate the ramp-up or ramp-down time as follows:
  - Ramp-up time = P1120 * P1138
  - Ramp-down time = P1121 * P1139

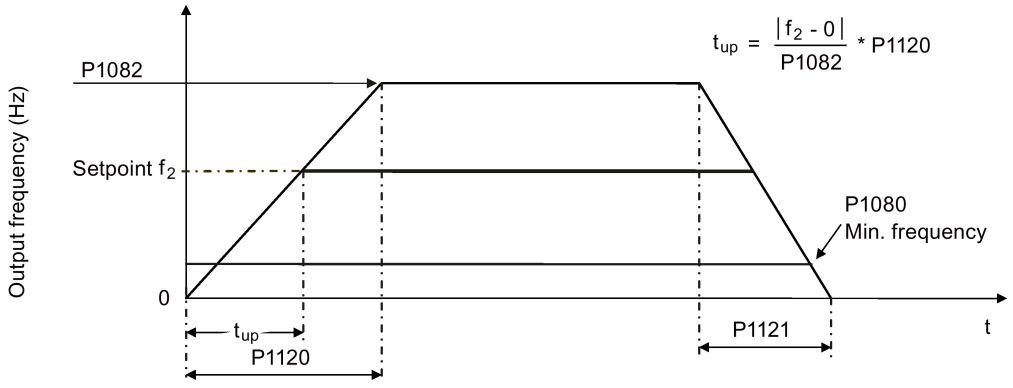

Setting parameters

Parameter	Function	Setting
P1082[0...2]	Maximum frequency [Hz]	This parameter sets maximum motor frequency at which motor will run irrespective of the frequency setpoint. Range: 0.00 to 550.00 (factory default: 50.00)
P1120[0...2]	Ramp-up time [s]	This parameter sets the time taken for motor to accelerate from standstill up to maximum motor frequency (P1082) when no rounding is used. Range: 0.00 to 650.00 (factory default: 10.00)
P1121[0...2]	Ramp-down time [s]	This parameter sets the time taken for motor to decelerate from maximum motor frequency (P1082) down to standstill when no rounding is used. Range: 0.00 to 650.00 (factory default: 10.00)
P1138	Ramp-up time scaling factor	This parameter sets the scaling factor for the ramp-up time. Range: 1.00 to 10.00 (factory default: 1.00)
P1139	Ramp-down time scaling factor	This parameter sets the scaling factor for the ramp-down time. Range: 1.00 to 10.00 (factory default: 1.00)

Setting ramp-up/down rounding time

Rounding times are recommended, since they prevent an abrupt response, thus avoiding detrimental effects on the mechanics.

Rounding times are not recommended when analog inputs are used, since they would result in overshoot/undershoot in the inverter response.

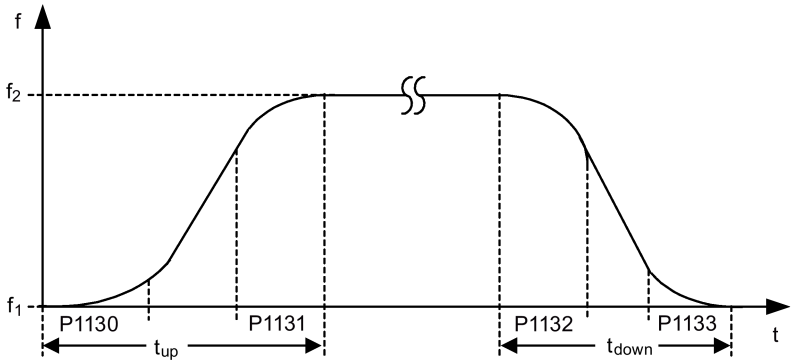

$$t_{up} = \frac{1}{2}(P1130 + P1131) + \frac{f_2 - f_1}{P1082} \cdot P1120$$

$$t_{down} = \frac{1}{2}(P1132 + P1133) + \frac{f_2 - f_1}{P1082} \cdot P1121$$

Setting parameters

Parameter	Function	Setting
P1130[0...2]	Ramp-up initial rounding time [s]	This parameter defines rounding time at start of ramp-up. Range: 0.00 to 40.00 (factory default: 0.00)
P1131[0...2]	Ramp-up final rounding time [s]	This parameter defines rounding time at end of ramp-up. Range: 0.00 to 40.00 (factory default: 0.00)
P1132[0...2]	Ramp-down initial rounding time [s]	This parameter defines rounding time at start of ramp-down. Range: 0.00 to 40.00 (factory default: 0.00)
P1133[0...2]	Ramp-down final rounding time [s]	This parameter defines rounding time at end of ramp-down. Range: 0.00 to 40.00 (factory default: 0.00)

5.6.2.7 Setting the Imax controller

Functionality

If ramp-up time is too short, the inverter may display the alarm A501 which means the output current is too high. The Imax controller reduces inverter current if the output current exceeds the maximum output current limit (r0067). This is achieved by reducing the inverter's output frequency or output voltage.

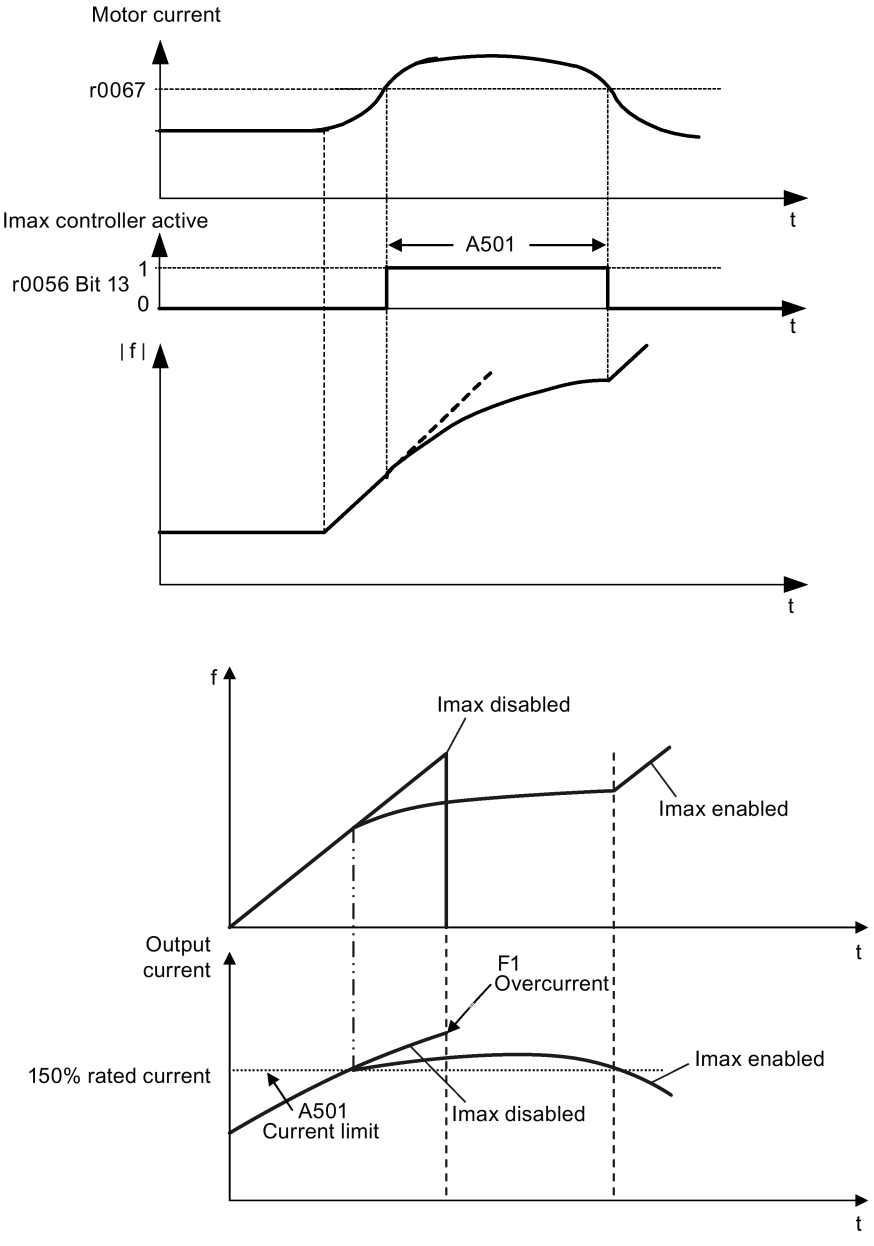

Setting parameters

You only have to change the factory default settings of the Imax controller if the inverter tends to oscillate when it reaches the current limit or it is shut down due to overcurrent.

Parameter	Function	Setting
P0305[0...2]	Rated motor current [A]	This parameter defines the nominal motor current from rating plate.
P0640[0...2]	Motor overload factor [%]	This parameter defines motor overload current limit relative to P0305 (rated motor current).
P1340[0...2]	Imax controller proportional gain	This parameter defines the proportional gain of the Imax controller. Range: 0.000 to 0.499 (factory default: 0.030)
P1341[0...2]	Imax controller integral time [s]	This parameter defines the integral time constant of the Imax controller. Setting P1341 to 0 disables the Imax controller. Range: 0.000 to 50.000 (factory default: 0.300)
P1345[0...2]	Imax voltage controller proportional gain	This parameter sets the proportional gain of Imax voltage controller. If the output current (r0068) exceeds the maximum current (r0067), the inverter is dynamically controlled by reducing the output voltage. Range: 0.000 to 5.499 (factory default: 0.250)
P1346[0...2]	Imax voltage controller integral time [s]	This parameter defines the integral time constant of the Imax voltage controller. Range: 0.000 to 50.000 (factory default: 0.300)
r0056.13	Status of motor control: Imax controller active	

5.6.2.8 Setting the Vdc controller

Functionality

If ramp-down time is too short, the inverter may display the alarm A911 which means the DC link voltage is too high. The Vdc controller dynamically controls the DC link voltage to prevent overvoltage trips on high inertia systems.

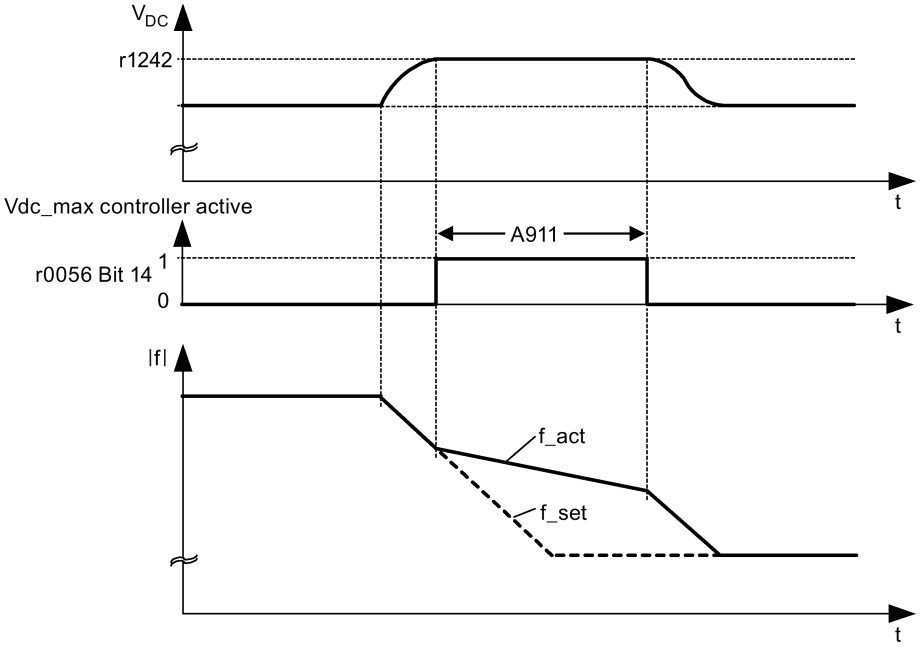

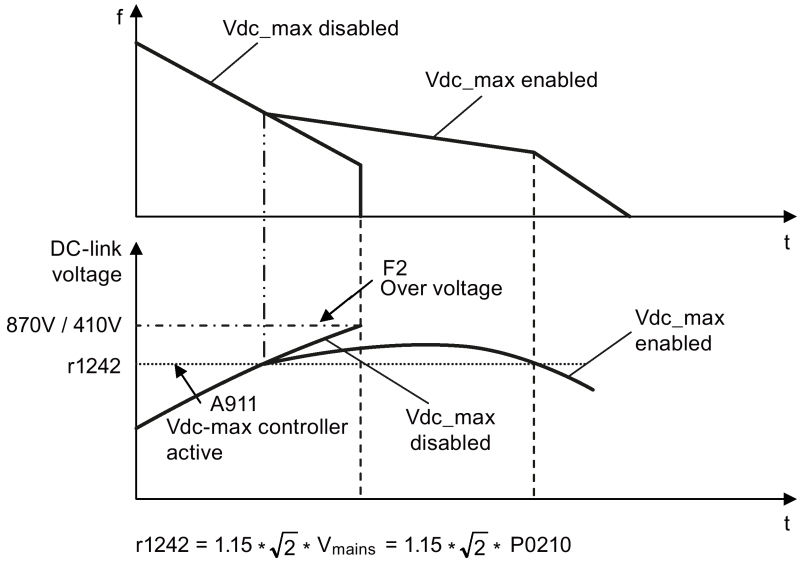

$r1242 = 1.15 * \sqrt{2} * V_{mains} = 1.15 * \sqrt{2} *$ P0210

Setting parameters

Parameter	Function	Setting
P1240[0...2]	Configuration of Vdc controller	This parameter enables/disables Vdc controller. = 0: Vdc controller disabled = 1: Vdc_max controller enabled (factory default) = 2: Kinetic buffering (Vdc_min controller) enabled = 3: Vdc_max controller and kinetic buffering (KIB) enabled **Note:** This parameter must be set to 0 (Vdc controller disabled) if a braking resistor is used.
P0210	Supply voltage [V]	This parameter defines the supply voltage. Its default value depends upon the type of inverter. Range: • 380 to 480 (for three phase AC 400 V inverters) • 200 to 240 (for single phase AC 230 V inverters)

5.6.2.9 Setting the load torque monitoring function

Functionality

The load torque monitoring function allows the mechanical force transmission between the motor and driven load to be monitored. This function can detect whether the driven load is blocked, or the force transmission has been interrupted.

The inverter monitors the load torque of the motor in different ways:

- Motor blocking detection
- No-load monitoring
- Speed-dependent load torque monitoring

Setting parameters

Parameter	Function	Setting
P2177[0...2]	Delay time for motor is blocked [ms]	Defines the delay time for identifying that the motor is blocked. Range: 0 to 10000 (factory default: 10)
P2179	Current limit for no load identified [%]	This parameter defines the threshold current for A922 (no load applied to inverter) relative to P0305 (rated motor current). Range: 0.0 to 10.0 (factory default: 3.0)
P2180	Delay time for no-load identification [ms]	Defines the delay time for detecting a missing output load. Range: 0 to 10000 (factory default: 2000)
P2181[0...2]	Load monitoring mode	The load monitoring is achieved by comparing the actual frequency/torque curve with a programmed envelope (defined by parameters P2182 to P2190). If the curve falls outside the envelope, a warning or trip is generated. = 0: Load monitoring disabled (factory default) = 1: Warning: Low torque/frequency = 2: Warning: High torque/frequency = 3: Warning: High/low torque/frequency = 4: Trip: Low torque/frequency = 5: Trip: High torque/frequency = 6: Trip: High/low torque/frequency
P2182[0...2]	Load monitoring threshold frequency 1 [Hz]	Range: 0.00 to 550.00 (factory default: 5.00)
P2183[0...2]	Load monitoring threshold frequency 2 [Hz]	Range: 0.00 to 550.00 (factory default: 30.00)
P2184[0...2]	Load monitoring threshold frequency 3 [Hz]	Range: 0.00 to 550.00 (factory default: 30.00)
P2185[0...2]	Upper torque threshold 1 [Nm]	Range: 0.0 to 99999.0 (factory default: value in r0333)
P2186[0...2]	Lower torque threshold 1 [Nm]	Range: 0.0 to 99999.0 (factory default: 0.0)
P2187[0...2]	Upper torque threshold 2 [Nm]	Range: 0.0 to 99999.0 (factory default: value in r0333)
P2188[0...2]	Lower torque threshold 2 [Nm]	Range: 0.0 to 99999.0 (factory default: 0.0)
P2189[0...2]	Upper torque threshold 3 [Nm]	Range: 0.0 to 99999.0 (factory default: value in r0333)
P2190[0...2]	Lower torque threshold 3 [Nm]	Range: 0.0 to 99999.0 (factory default: 0.0)
P2192[0...2]	Load monitoring delay time [s]	Range: 0 to 65 (factory default: 10)

5.6.3 Commissioning advanced functions

5.6.3.1 Starting the motor in super torque mode

Functionality

This startup mode applies a torque pulse for a given time to help start the motor.

Typical application field

Sticky pumps

Setting parameters

Parameter	Function	Setting
P3350[0...2]	Super torque modes	= 1: Enable super torque mode **Note:** When the value of P3350 is changed, the value of P3353 is changed as follows: • P3350 = 2: P3353 = 0.0s • P3350 ≠ 2: P3353 = default The ramp time of 0s gives an additional 'kicking' effect when hammer start is in use.
P3351[0...2]	BI: Super torque enable	This parameter defines the source of the super torque enable. The setting is effective when P3352 = 2. Factory default: 0 (never enabled)
P3352[0...2]	Super torque startup mode	This parameter defines when the super torque function becomes active. = 0: Enabled on first run after power-up = 1: Enabled on every run = 2: Enabled by digital input (enable source is defined by P3351; 0 = never enabled, 1 = enabled on every run)
P3353[0...2]	Super torque ramp time [s]	This parameter defines the ramp time to be used when ramping up to the super torque frequency. Range: 0.0 to 650.0 (factory default: 5.0)
P3354[0...2]	Super torque frequency [Hz]	This parameter defines the frequency at which the additional boost is applied for super torque mode. Range: 0.0 to 550.0 (factory default: 5.0)
P3355[0...2]	Super torque boost level [%]	This parameter sets the temporary boost level for super torque mode. It applies boost in [%] relative to P0305 (rated motor current) once the super torque frequency has been reached for the time specified in P3356. Range: 0.0 to 200.0 (factory default: 150.0)
P3356[0...2]	Super torque boost time [s]	This parameter sets the time for which the additional boost is applied, when the output frequency is held at P3354. Range: 0.0 to 20.0 (factory default: 5.0)

Function diagram

Description:

The Super Torque mode is enabled when an ON command is issued, and the following sequence is performed:

- Ramps up to P3354 Hz with the boost level specified by P1310, P1311, and P1312
- Maintains for P3356 s with the boost level specified by P3355
- Reverts boost level to that specified by P1310, P1311, and P1312
- Reverts to "normal" setpoint and allows output to ramp using P1120

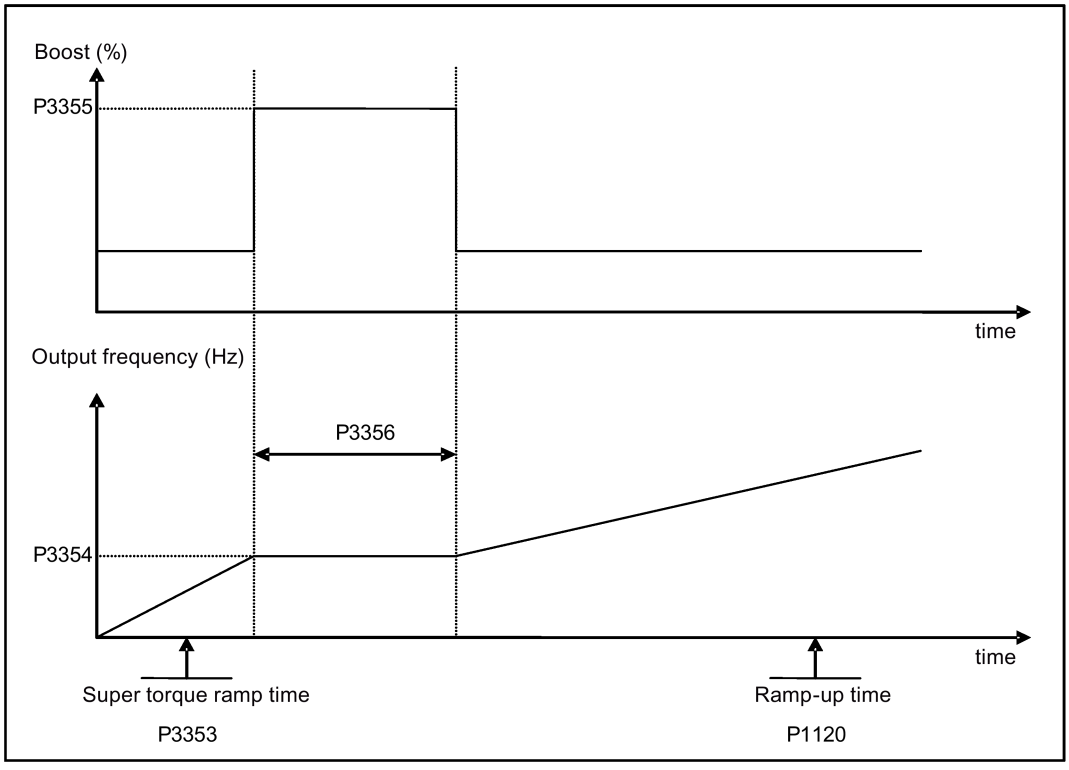

5.6.3.2 Starting the motor in hammer start mode

Functionality

This startup mode applies a sequence of torque pulses to start the motor.

Typical application field

Very sticky pumps

Setting parameters

Parameter	Function	Setting
P3350[0...2]	Super torque modes	= 2: Enable hammer start mode **Note:** When the value of P3350 is changed, the value of P3353 is changed as follows: • P3350 = 2: P3353 = 0.0s • P3350 ≠ 2: P3353 = default The ramp time of 0s gives an additional 'kicking' effect when hammer start is in use.
P3351[0...2]	BI: Super torque enable	This parameter defines the source of the super torque enable. The setting is effective when P3352 = 2. Factory default: 0 (never enabled)
P3352[0...2]	Super torque startup mode	This parameter defines when the super torque function becomes active. = 0: Enabled on first run after power-up = 1: Enabled on every run = 2: Enabled by digital input (enable source is defined by P3351; 0 = never enabled, 1 = enabled on every run)
P3353[0...2]	Super torque ramp time [s]	This parameter defines the ramp time to be used when ramping up to the super torque frequency. Range: 0.0 to 650.0 (factory default: 5.0)
P3354[0...2]	Super torque frequency [Hz]	This parameter defines the frequency at which the additional boost is applied for super torque mode. Range: 0.0 to 550.0 (factory default: 5.0)
P3357[0...2]	Hammer start boost level [%]	This parameter sets the temporary boost level for hammer start mode. It applies boost in [%] relative to P0305 (rated motor current) once the super torque frequency has been reached for the time specified in P3356. Range: 0.0 to 200.0 (factory default: 150.0)
P3358[0...2]	Number of hammer cycles	This parameter defines the number of times the hammer start boost level is applied. Range: 1 to 10 (factory default: 5)
P3359[0...2]	Hammer on time [ms]	This parameter sets the time for which the additional boost is applied for each repetition (must be at least 3 x motor magnetization time). Range: 0 to 1000 (factory default: 300)
P3360[0...2]	Hammer off Time [ms]	This parameter sets the time for which the additional boost is removed for each repetition (must be at least 3 x motor magnetization time). Range: 0 to 1000 (factory default: 100)

Function diagram

Description:

The hammer start mode is enabled when an ON command is issued, and the following sequence is performed:

- Ramp up to P3354 Hz with the boost level specified by P1310, P1311, and P1312
- Revert boost level to that specified by P1310, P1311, and P1312
- Revert to "normal" setpoint and allow output to ramp using P1120

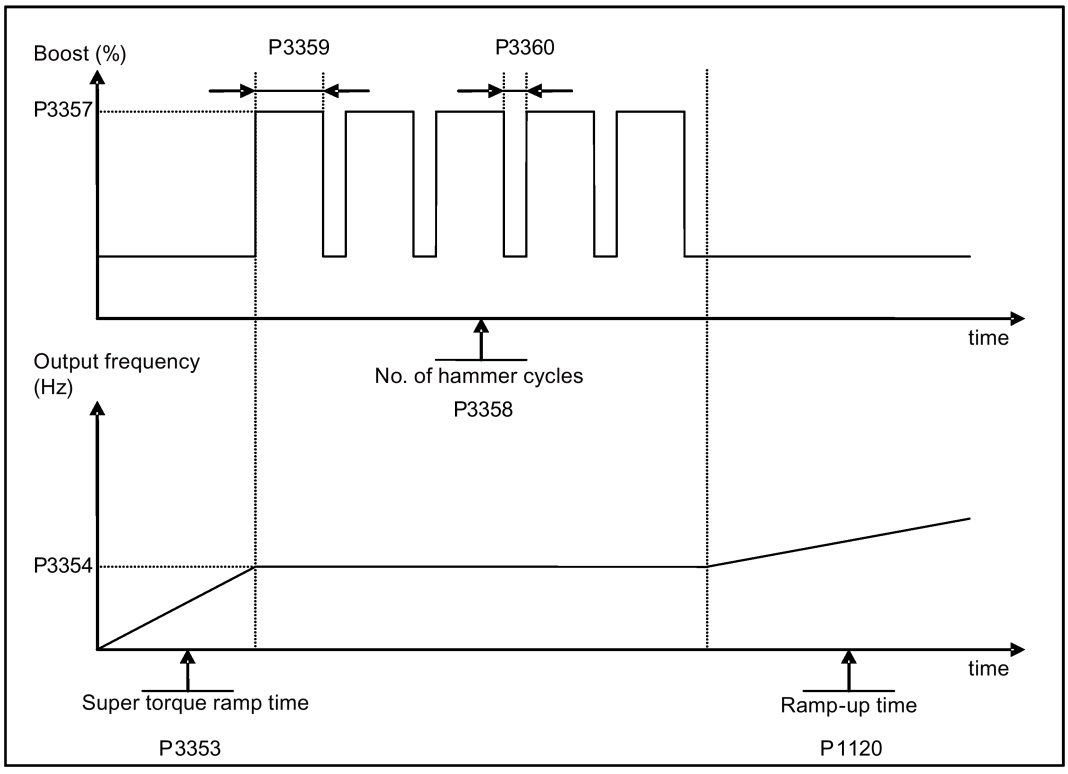

5.6.3.3 Starting the motor in blockage clearing mode

Functionality

This startup mode momentarily reverses the motor rotation to clear a pump blockage.

Typical application field

Pump clearing

Setting parameters

Parameter	Function	Setting
P3350[0...2]	Super torque modes	= 3: Enable blockage clearing mode **Note:** When the value of P3350 is changed, the value of P3353 is changed as follows: • P3350 = 2: P3353 = 0.0s • P3350 ≠ 2: P3353 = default The ramp time of 0s gives an additional 'kicking' effect when hammer start is in use. If blockage clearing mode is enabled (P3350 = 3), make sure that reverse direction is not inhibited, i.e. P1032 = P1110 = 0.

Parameter	Function	Setting
P3351[0...2]	BI: Super torque enable	This parameter defines the source of the super torque enable. The setting is effective when P3352 = 2. Factory default: 0 (never enabled)
P3352[0...2]	Super torque startup mode	This parameter defines when the super torque function becomes active. = 0: Enabled on first run after power-up = 1: Enabled on every run = 2: Enabled by digital input (enable source is defined by P3351; 0 = never enabled, 1 = enabled on every run)
P3353[0...2]	Super torque ramp time [s]	This parameter defines the ramp time to be used when ramping up to the super torque frequency. Range: 0.0 to 650.0 (factory default: 5.0)
P3361[0...2]	Blockage clearing frequency [Hz]	This parameter defines the frequency at which the inverter runs in the opposite direction to the setpoint during the blockage clearing reverse sequence. Range: 0.0 to 550.0 (factory default: 5.0)
P3362[0...2]	Blockage clearing reverse time [s]	This parameter sets the time for which the inverter runs in the opposite direction to the setpoint during the reverse sequence. Range: 0.0 to 20.0 (factory default: 5.0)
P3363[0...2]	Enable rapid ramp	This parameter selects whether the inverter ramps to, or starts directly from, the blockage clearing frequency = 0: Disable rapid ramp for blockage clearing (use ramp time specified in P3353) = 1: Enable rapid ramp for blockage clearing (jump to the reverse frequency - this introduces a "kicking" effect which helps to clear the blockage) Range: 0 to 1 (factory default: 0)
P3364[0...2]	Number of blockage clearing cycles	This parameter sets the number of times the blockage clearing reversing cycle is repeated. Range: 1 to 10 (factory default: 1)

Function diagram

Description:

The blockage clearing mode is enabled when an ON command is issued, and the following sequence is performed:

- Ramp or step (depending on P3363) to P3361 Hz in opposite direction to the setpoint
- For P3364 repetitions:
  - Ramp down to 0 Hz using normal ramp time as specified in P1121
  - Ramp or step (depending on P3363) to P3361 Hz in opposite direction to the setpoint
- Revert to "normal" setpoint and allow output to ramp using P1120.

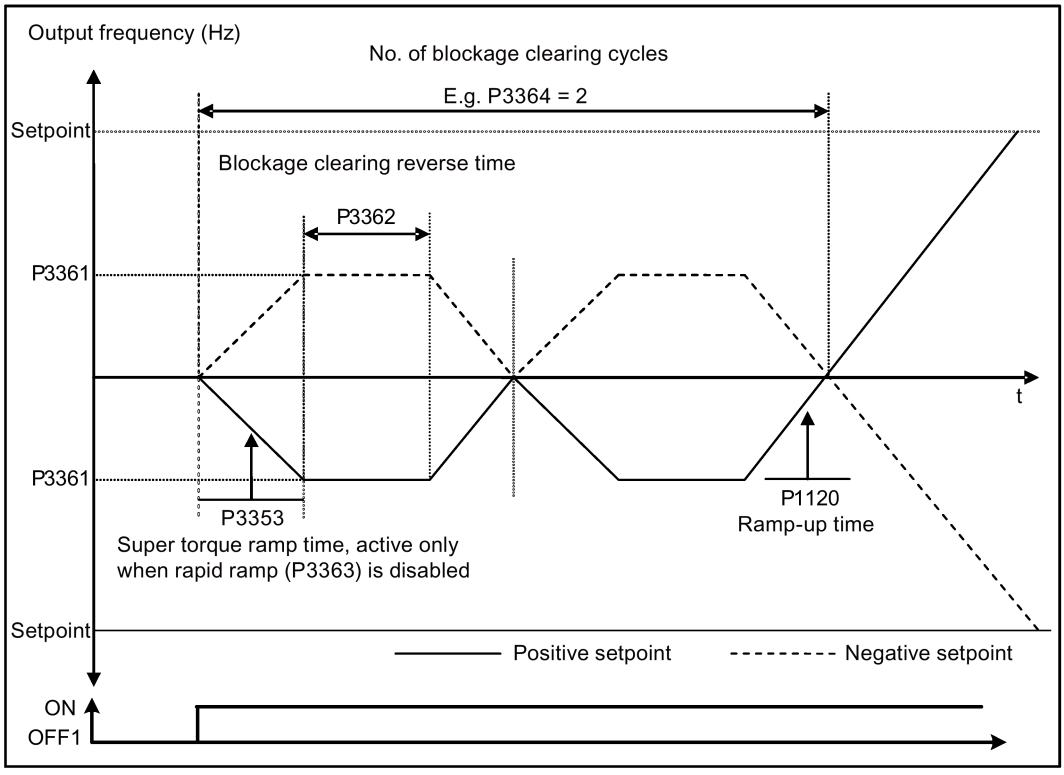

5.6.3.4 Running the inverter in economy mode

Functionality

Economy mode works by slightly changing the output voltage either up or down in order to find the minimum input power.

Note

The economy mode optimization is only active when operating at the requested frequency setpoint. The optimization algorithm becomes active 5 seconds after the setpoint has been reached, and is disabled on a setpoint change or if the I_{max} or V_{max} controller is active.

Typical applications

Motors with stable or slowly changing loads

Setting parameters

Parameter	Function	Setting
P1300[0...2]	Control mode	= 4: V/f Eco Mode with linear characteristic = 7: V/f Eco Mode with quadratic characteristic
r1348	Economy mode factor [%]	This parameter displays the calculated economy mode factor (range: 80% to 120%) applied to the demanded output voltage. If this value is too low, the system may become unstable.

Function diagram

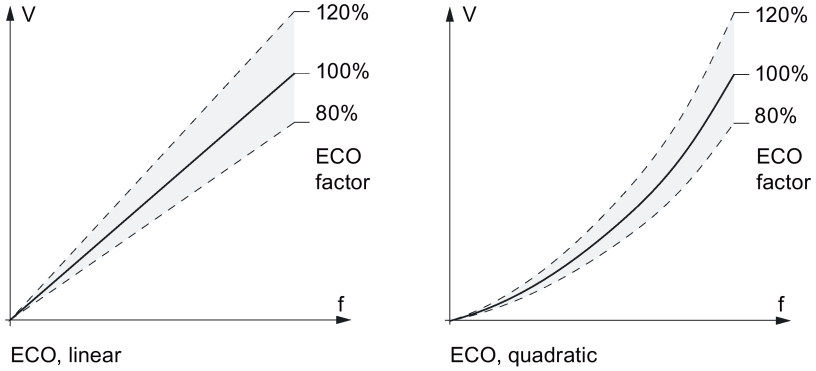

5.6.3.5 Setting the UL508C/UL61800-5-1-compliant motor overtemperature protection

Functionality

The function protects the motor from overtemperature. The function defines the reaction of the inverter when motor temperature reaches warning threshold. The inverter can remember the current motor temperature on power-down and reacts on the next power-up based on the setting in P0610. Setting any value in P0610 other than 0 or 4 will cause the inverter to trip (F11) if the motor temperature is 10% above the warning threshold P0604.

Note

In order to comply with UL508C/UL61800-5-1, parameter P0610 must not be changed from its factory setting of 6.

Setting parameters

Parameter	Function	Setting
P0610[0...2]	Motor I^2t temperature reaction	This parameter defines reaction when motor temperature reaches warning threshold. Settings 0 to 2 do not recall the motors temperature (stored at power-down) on power-up: = 0: Warning only = 1: Warning with Imax control (motor current reduced) and trip (F11) = 2: Warning and trip (F11) Settings 4 to 6 recall the motors temperature (stored at power-down) on power-up: = 4: Warning only = 5: Warning with Imax control (motor current reduced) and trip (F11) = 6: Warning and trip (F11)

5.6.3.6 Setting the free function blocks (FFBs)

Functionality

Additional signal interconnections in the inverter can be established by means of the free function blocks (FFBs). Every digital and analog signal available via BICO technology can be routed to the appropriate inputs of the free function blocks. The outputs of the free function blocks are also interconnected to other functions using BICO technology.

Example

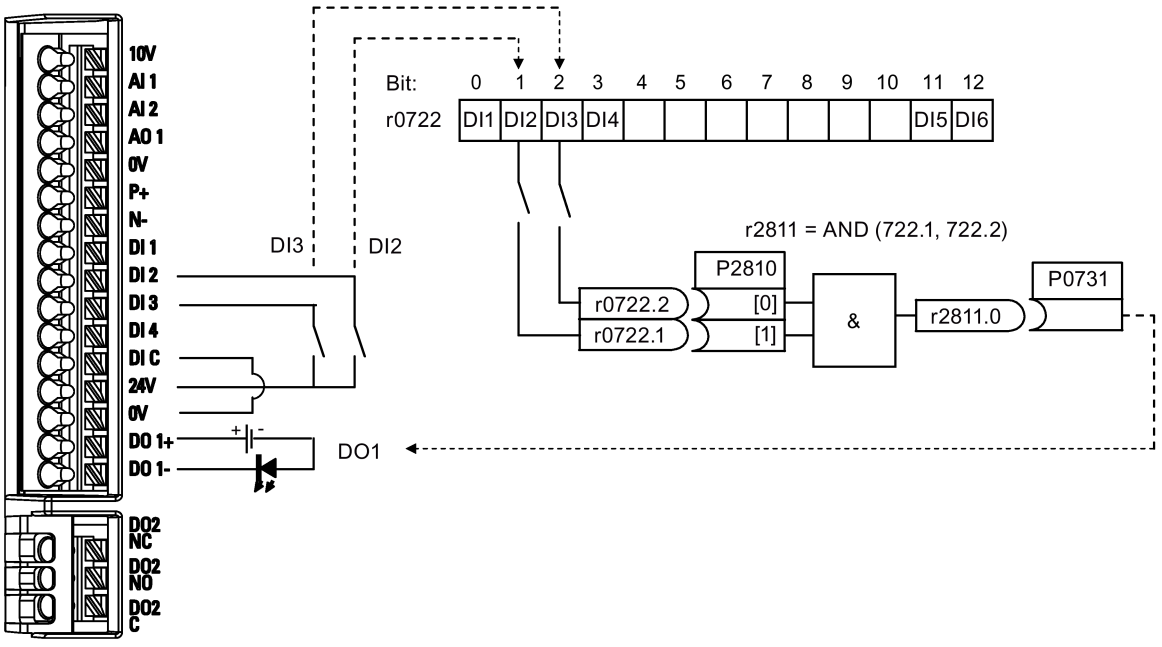

Setting parameters

Parameter	Function	Setting	
P0702	Function of digital input 2	= 99: Enable BICO parameterization for digital input 2	
P0703	Function of digital input 3	= 99: Enable BICO parameterization for digital input 3	
P2800	Enable FFBs	= 1: Enable (general enable for all free function blocks)	
P2801[0]	Activate FFBs	= 1: Enable AND 1	
P2810[0]	BI: AND 1	= 722.1	P2810[0] and P2810[1] define inputs of AND 1 element, and output is r2811.0.
P2810[1]		= 722.2	
P0731	BI: Function of digital output 1	This parameter defines source of digital output 1. = r2811.0: Use the AND (DI2, DI3) to switch on LED	

For more information about FFBs and additional settings of individual parameter, see Chapter "Parameter list (Page 183)".

5.6.3.7 Setting the flying start function

Functionality

The flying start function (enabled using P1200) allows the inverter to be switched onto a motor which is still spinning by rapidly changing the output frequency of the inverter until the actual motor speed has been found. Then, the motor runs up to setpoint using the normal ramp time.

Flying start must be used in cases where the motor may still be turning (e.g. after a short mains break) or can be driven by the load. Otherwise, overcurrent trips will occur.

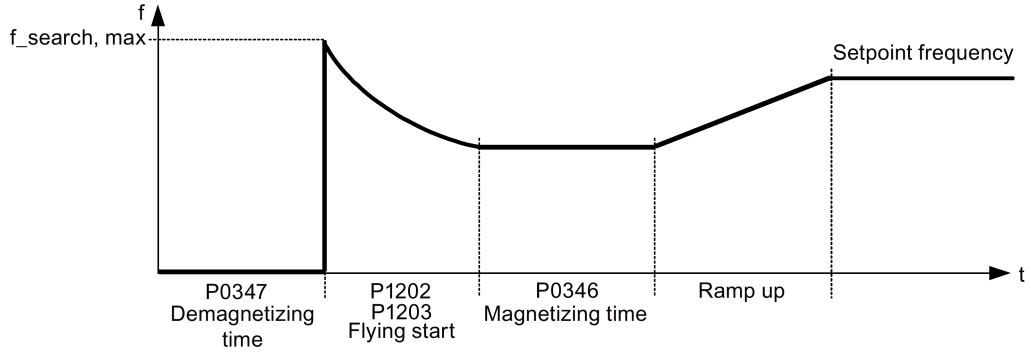

Setting parameters

Parameter	Function	Setting
P1200	Flying start	Settings 1 to 3 search in both directions: = 0: Flying start disabled = 1: Flying start always active = 2: Flying start active after power on, fault, OFF2 = 3: Flying start active after fault, OFF2 Settings 4 to 6 search only in the direction of the setpoint: = 4: Flying start always active = 5: Flying start active after power on, fault, OFF2 = 6: Flying start active after fault, OFF2
P1202[0...2]	Motor-current: flying start [%]	This parameter defines search current used for flying start. Range: 10 to 200 (factory default: 100) **Note:** Search current settings in P1202 that are below 30% (and sometimes other settings in P1202 and P1203) may cause motor speed to be found prematurely or too late, which can result in F1 or F2 trips.
P1203[0...2]	Search rate: flying start [%]	This parameter sets factor (in V/f mode only) by which the output frequency changes during flying start to synchronize with turning motor. Range: 10 to 500 (factory default: 100) **Note:** A higher value produces a flatter gradient and thus a longer search time. A lower value has the opposite effect.

5.6.3.8 Setting the automatic restart function

Functionality

After a power failure (F3 "Undervoltage"), the automatic restart function (enabled using P1210) automatically switches on the motor if an ON command is active. Any faults are automatically acknowledged by the inverter.

When it comes to power failures (line supply failure), then a differentiation is made between the following conditions:

- "Line undervoltage (mains brownout)" is a situation where the line supply is interrupted and returns before the built-in BOP display has gone dark (this is an extremely short line supply interruption where the DC link hasn't completely collapsed).
- "Line failure (mains blackout)" is a situation where the built-in BOP display has gone dark (this represents a longer line supply interruption where the DC link has completely collapsed) before the line supply returns.

Setting parameters

Parameter	Function	Setting
P1210	Automatic restart	This parameter configures automatic restart function. = 0: Disabled = 1: Trip reset after power on, P1211 disabled = 2: Restart after mains blackout, P1211 disabled = 3: Restart after mains brownout or fault, P1211 enabled = 4: Restart after mains brownout, P1211 enabled = 5: Restart after mains blackout and fault, P1211 disabled = 6: Restart after mains brown- /blackout or fault, P1211 enabled = 7: Restart after mains brown- /blackout or fault, trip when P1211 expires = 8: Restart after mains brown- /blackout with F3 and leave an interval in seconds determined by P1214, P1211 disabled = 9: Restart after mains brown- /blackout with F3 during the attempt time determined by P1214, P1211 disabled = 10: Restart after mains brown- /blackout with F3 during the attempt time determined by P1214 or manual fault acknowledgement, P1211 disabled
P1211	Number of restart attempts	This parameter specifies number of times inverter will attempt to restart if automatic restart P1210 is activated. Range: 0 to 10 (factory default: 3)
P1214	Restart time interval	This parameter has either of the following functions: • Specifying the restart interval when P1210 = 8 • Specifying the total restart attempt time when P1210 = 9 or P1210 = 10 Range: 0 to 1000 (factory default: 30)

5.6.3.9 Running the inverter in frost protection mode

Functionality

If the surrounding temperature falls below a given threshold, motor turns automatically to prevent freezing.

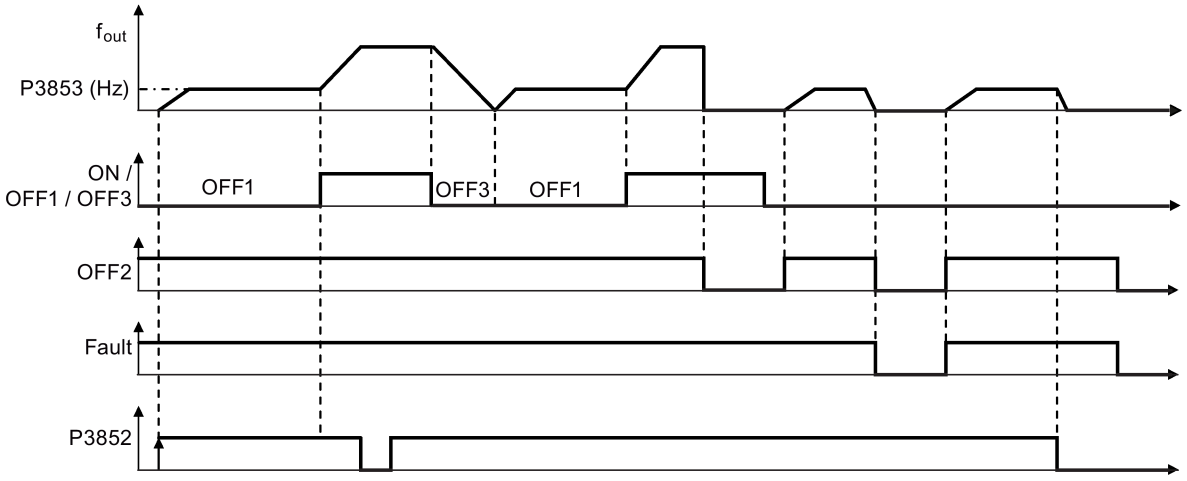

- OFF1/OFF3: The frost protection function is disabled when OFF3 is activated and enabled again when OFF1 is activated.
- OFF2/fault: The motor stops and the frost protection is deactivated.

Setting parameters

Parameter	Function	Setting
P3852[0...2]	BI: Enable frost protection	This parameter defines command source of protection enable command. If binary input is equal to one, then protection will be initiated (factory default: 0). If P3853 ≠ 0, frost protection is applied by applying the given frequency to the motor. Note that the protection function may be overridden under the following circumstances: • If inverter is running and protection signal becomes active, signal is ignored • If inverter is turning motor due to active protection signal and a RUN command is received, RUN command overrides frost signal • Issuing an OFF command while protection is active will stop the motor
P3853[0...2]	Frost protection frequency [Hz]	This parameter specifies the frequency applied to the motor when frost protection is active. Range: 0.00 to 550.00 (factory default: 5.00)

5.6.3.10 Running the inverter in condensation protection mode

Functionality

If an external condensation sensor detects excessive condensation, the inverter applies a DC current to keep the motor warm to prevent condensation.

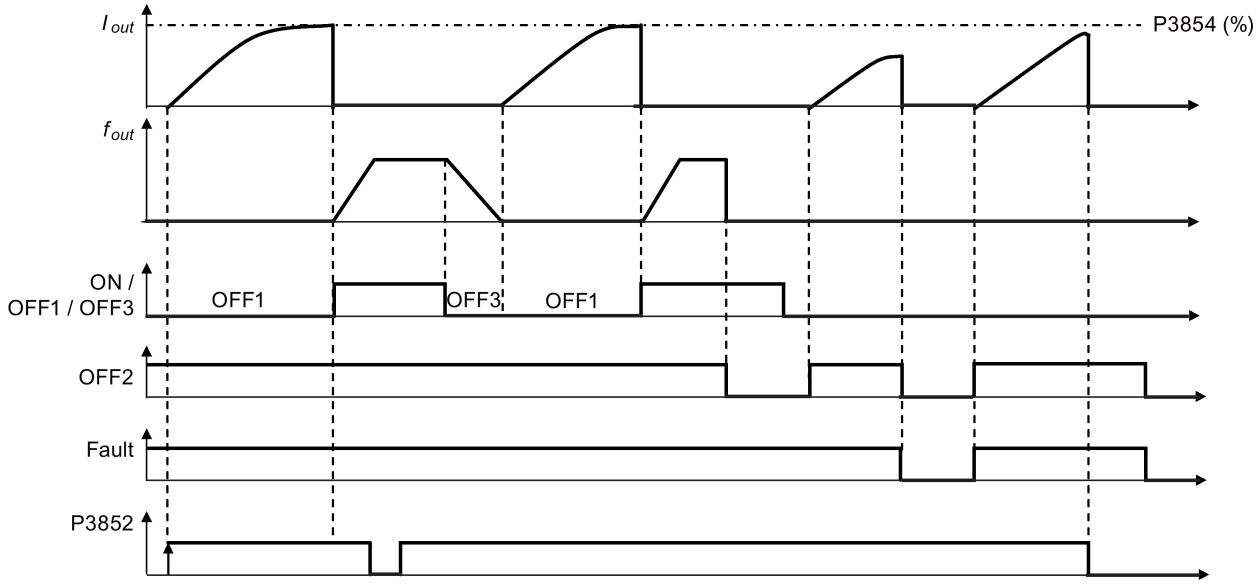

- OFF1/OFF3: The condensation protection function is disabled when OFF3 is activated and enabled again when OFF1 is activated.
- OFF2/fault: The motor stops and the condensation protection is deactivated.

Setting parameters

Parameter	Function	Setting
P3852[0...2]	BI: Enable frost protection	This parameter defines command source of protection enable command. If binary input is equal to one, then protection will be initiated (factory default: 0). If P3853 = 0 and P3854 ≠ 0, condensation protection is applied by applying the given current to the motor. Note that the protection function may be overridden under the following circumstances: • If inverter is running and protection signal becomes active, signal is ignored • If inverter is turning motor due to active protection signal and a RUN command is received, RUN command overrides frost signal • Issuing an OFF command while protection is active will stop the motor
P3854[0...2]	Condensation protection current [%]	This parameter specifies the DC current (as a percentage of nominal current) which is applied to the motor when condensation protection is active. Range: 0 to 250 (factory default: 100)

5.6.3.11 Running the inverter in sleep mode

Functionality

To achieve energy-saving operation, you can enable the inverter to run in either frequency sleep mode (P2365 = 1) or PID sleep mode(P2365 = 2).

- Frequency sleep mode (hibernation): When the demand frequency falls below the minimum frequency (P1080), the OFF delay (P2366) is started. When the OFF delay expires, the inverter is ramped down to stop and enters the sleep mode. The inverter has to go through the ON delay (P2367) before restarting.

P2365 = 1

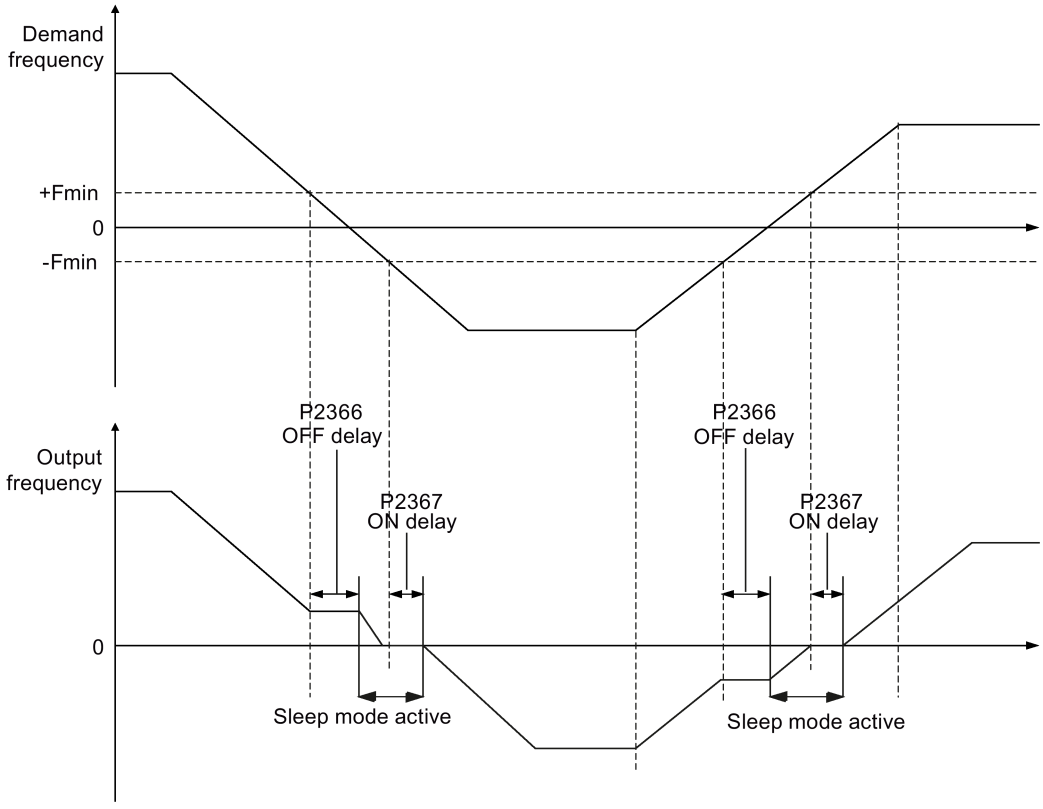

- PID sleep mode (hibernation): When the inverter under PID control drops below the PID hibernation setpoint (P2390), the PID hibernation timer (P2391) is started. When the timer expires, the inverter is ramped down to stop and enters sleep mode. The inverter restarts when it reaches the PID hibernation restart point (P2392).

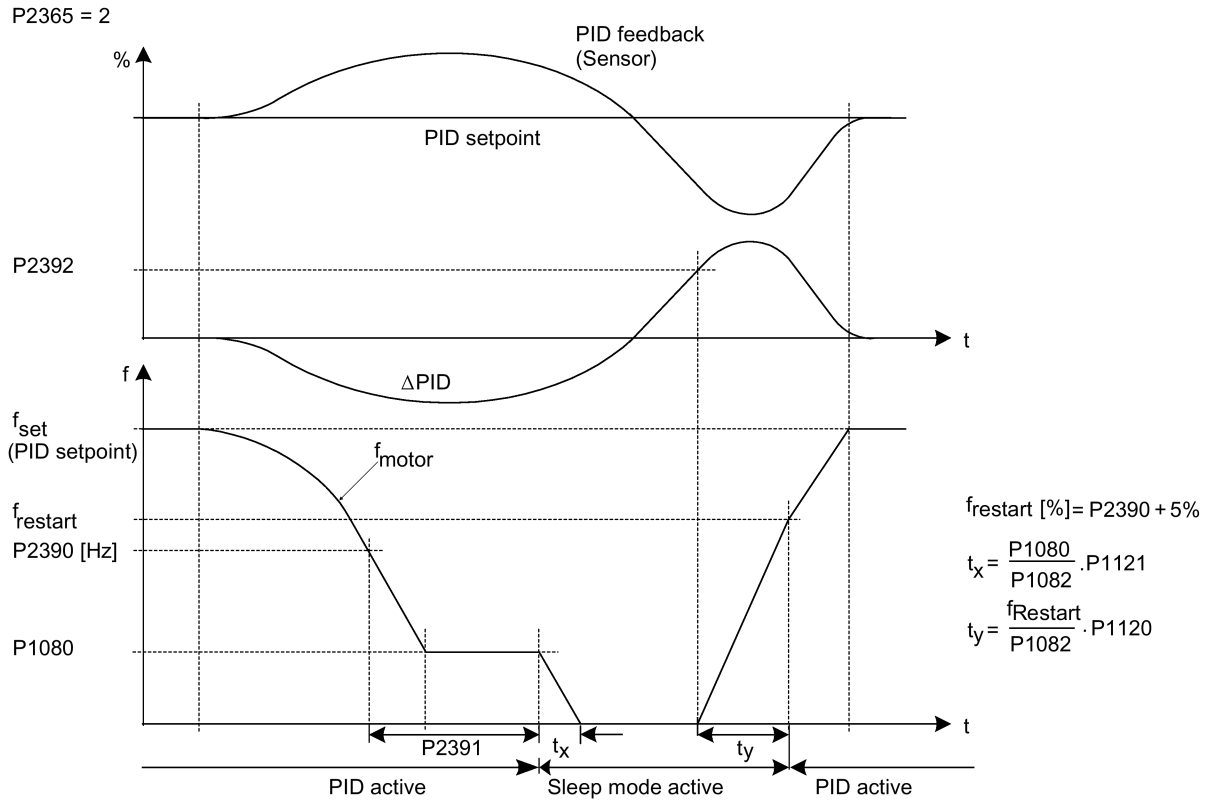

Setting parameters

Parameter	Function	Setting
P2365[0...2]	Hibernation enable/disable	Select or disable the hibernation functionality. = 0: Disabled = 1: Frequency hibernation (the frequency setpoint as the wakeup trigger) = 2: PID hibernation (the PID error as the wakeup trigger) Range: 0 to 2 (factory default: 0)
P2366[0...2]	Delay before stopping motor [s]	With hibernation enabled, this parameter defines the delay before activating the sleep mode of the inverter. Range: 0 to 254 (factory default: 5)
P2367[0...2]	Delay before starting motor [s]	With hibernation enabled, this parameter defines the delay before "waking up" (disabling) the sleep mode of the inverter. Range: 0 to 254 (factory default: 2)
P2390	PID hibernation setpoint [%]	When the value of P2365 is set to 2 and the inverter under PID control drops below the PID hibernation setpoint, the PID hibernation timer P2391 is started. When the PID hibernation timer has expired, the inverter is ramped down to stop and enters the PID hibernation mode. Range: -200.00 to 200.00 (factory default: 0)
P2391	PID hibernation timer [s]	When the PID hibernation timer P2391 has expired, the inverter is ramped down to stop and enters the PID hibernation mode. Range: 0 to 254 (factory default: 0)

Parameter	Function	Setting
P2392	PID hibernation restart setpoint [%]	While in PID hibernation mode, the PID controller continues to generate the error r2273. Once this reaches the restart point P2392, the inverter immediately ramps to the setpoint calculated by the PID controller. Range: -200.00 to 200.00 (factory default: 0)
r2399	CO/BO: PID hibernation status word	Displays PID hibernation status word. Bit 00: Not used Bit 01: PID hibernation enabled (PID hibernation is enabled and the inverter is not in PID hibernation.) Bit 02: Hibernation active (PID hibernation is enabled and the inverter is in PID hibernation.) Factory default: 0
P1080[0...2]	Minimum frequency [Hz]	Sets minimum motor frequency at which motor will run irrespective of frequency setpoint. Value set here is valid both for clockwise and for counterclockwise rotation. Range: 0.00 to 550.00 (factory default: 0.00)

5.6.3.12 Setting the wobble generator

Functionality

The wobble generator executes predefined periodical disruptions superimposed on the main setpoint for technological usage in the fiber industry. The wobble function can be activated via P2940. It is independent of the setpoint direction, thus only the absolute value of the setpoint is relevant. The wobble signal is added to the main setpoint as an additional setpoint. During the change of the setpoint the wobble function is inactive. The wobble signal is also limited by the maximum frequency (P1082).

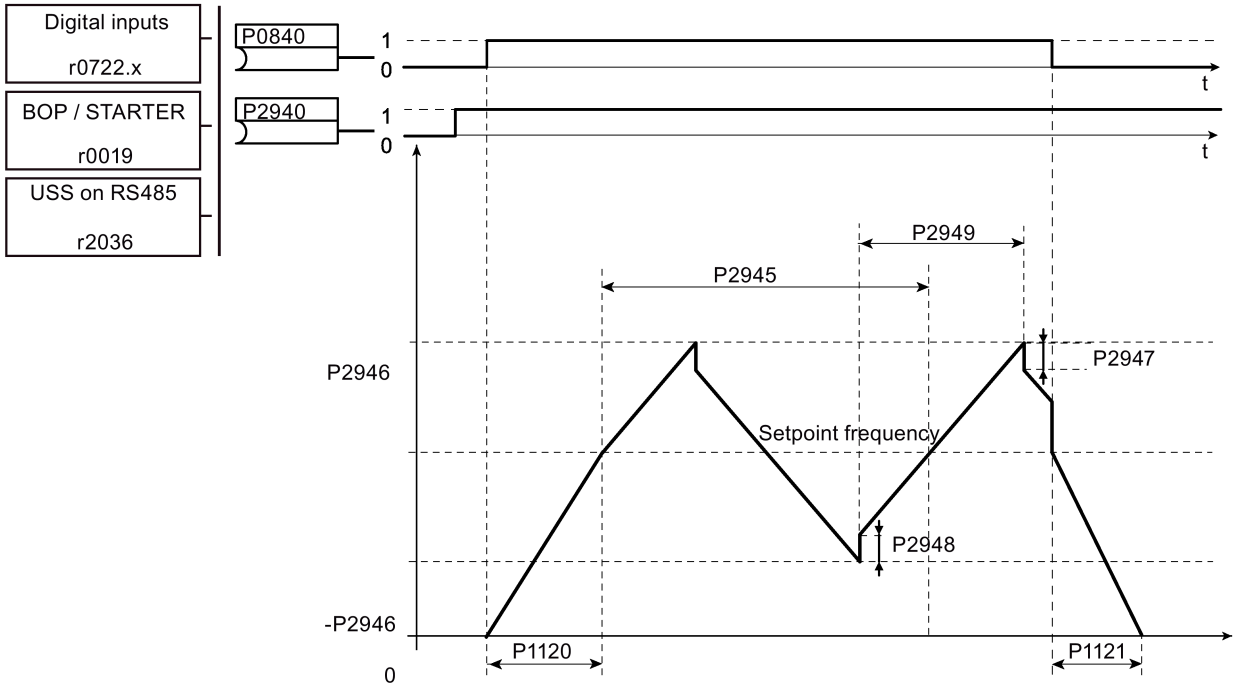

Wobble function disturb signal

Setting parameters

Parameter	Function	Setting
P2940	BI: Release wobble function	This parameter defines the source to release the wobble function. Factory default: 0.0
P2945	Wobble signal frequency [Hz]	This parameter sets the frequency of the wobble signal. Range: 0.001 to 10.000 (factory default: 1.000)
P2946	Wobble signal amplitude [%]	This parameter sets the value for the amplitude of the wobble-signal as a proportion of the present ramp function generator (RFG) output. Range: 0.000 to 0.200 (factory default: 0.000)
P2947	Wobble signal decrement step	This parameter sets the value for decrement step at the end of the positive signal period. Range: 0.000 to 1.000 (factory default: 0.000)
P2948	Wobble signal increment step	This parameter sets the value for the increment step at the end of the negative signal period. Range: 0.000 to 1.000 (factory default: 0.000)
P2949	Wobble signal pulse width [%]	This parameter sets the relative widths of the rising and falling pulses. Range: 0 to 100 (factory default: 50)

5.6.3.13 Running the inverter in motor staging mode

Functionality

Motor staging allows the control of up to 2 additional staged pumps or fans, based on a PID control system. The complete system consists of one pump controlled by the inverter and up to 2 further pumps/fans controlled from contactors or motor starters. The contactors or motor starter are controlled by digital outputs from the inverter.

The diagram below shows a typical pumping system.

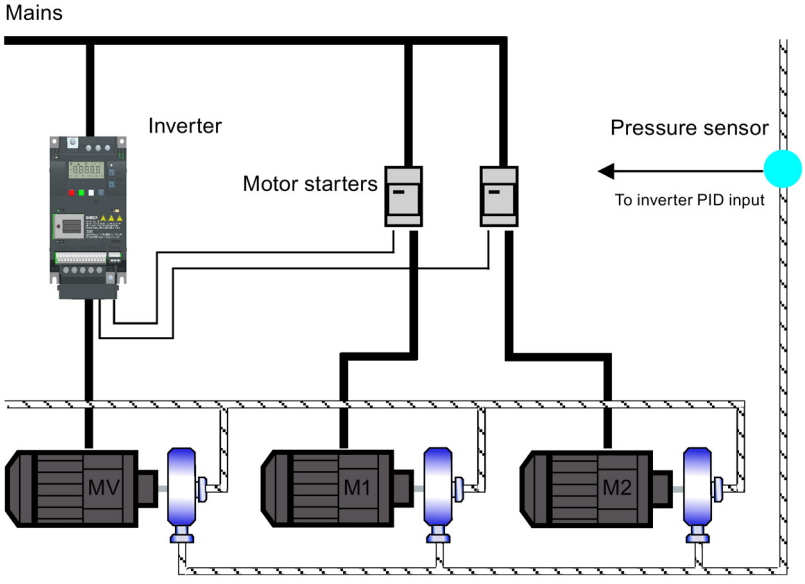

Staging:

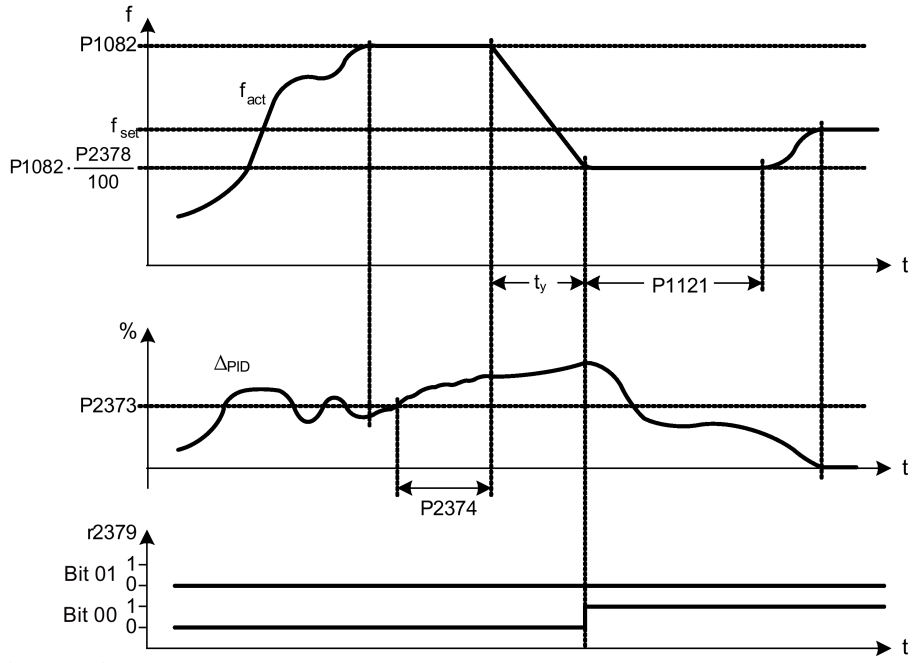

Condition for staging:

ⓐ f_{act} ≥ P1082
ⓑ Δ_{PID} ≥ P2373
ⓒ $t_{ⓐⓑ}$ > P2374

$$t_y = \left(1 - \frac{P2378}{100}\right) \cdot P1121$$

Destaging:

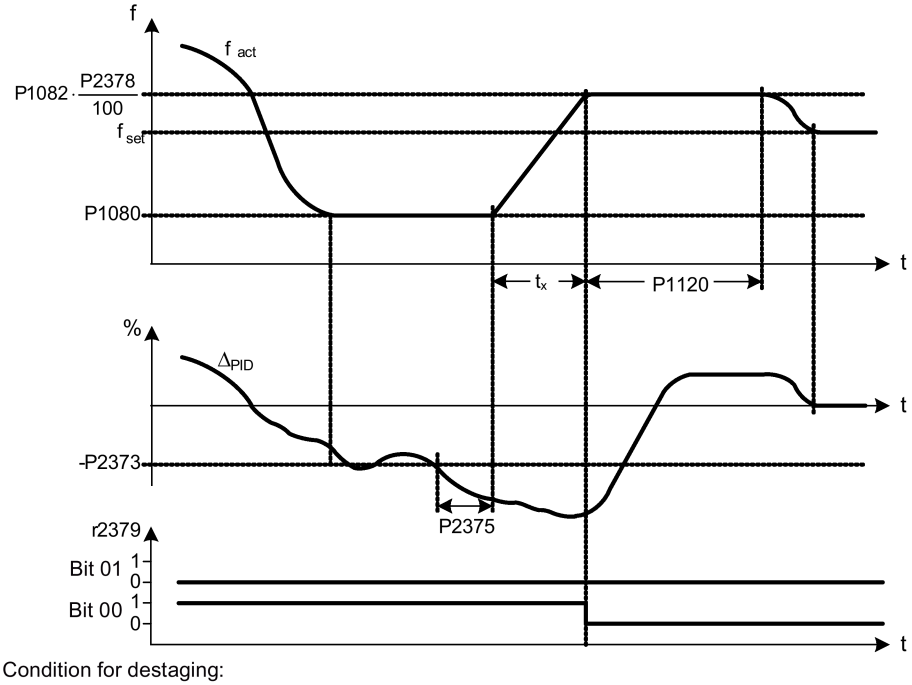

Condition for destaging:

ⓐ f_{act} ≤ P1080
ⓑ Δ_{PID} ≤ -P2373
ⓒ $t_{ⓐⓑ}$ > P2375

$$t_x = \left(\frac{P2378}{100} - \frac{P1080}{P1082}\right) \cdot P1120$$

Setting parameters

Parameter	Function	Setting
P2370[0...2]	Motor staging stop mode	This parameter selects stop mode for external motors when motor staging is in use. = 0: Normal stop (factory default) = 1: Sequence stop
P2371[0...2]	Motor staging configuration	This parameter selects configuration of external motors (M1, M2) used for motor staging feature. = 0: Motor staging disabled = 1: M1 = 1 x MV, M2 = Not fitted = 2: M1 = 1 x MV, M2 = 1 x MV = 3: M1 = 1 x MV, M2 = 2 x MV
P2372[0...2]	Motor staging cycling	This parameter enables motor cycling for the motor staging feature. = 0: Disabled (factory default) = 1: Enabled
P2373[0...2]	Motor staging hysteresis [%]	P2373 as a percentage of PID setpoint that PID error r2273 must be exceeded before staging delay starts. Range: 0.0 to 200.0 (factory default: 20.0)
P2374[0...2]	Motor staging delay [s]	This parameter defines the time that PID error r2273 must exceed motor staging hysteresis P2373 before staging occurs. Range: 0 to 650 (factory default: 30)
P2375[0...2]	Motor destaging delay [s]	This parameter defines the time that PID error r2273 must exceed motor staging hysteresis P2373 before destaging occurs. Range: 0 to 650 (factory default: 30)
P2376[0...2]	Motor staging delay override [%]	P2376 as a percentage of PID setpoint. When the PID error r2273 exceeds this value, a motor is staged/destaged irrespective of the delay timers. Range: 0.0 to 200.0 (factory default: 25.0) **Note:** The value of this parameter must always be larger than staging hysteresis P2373.
P2377[0...2]	Motor staging lockout timer [s]	This parameter defines the time for which delay override is prevented after a motor has been staged or destaged. Range: 0 to 650 (factory default: 30)
P2378[0...2]	Motor staging frequency f_st [%]	This parameter sets the frequency at which the digital output is switched during a (de) staging event, as the inverter ramps from maximum to minimum frequency (or vice versa). Range: 0.0 to 120.0 (factory default: 50.0)
r2379.0...1	CO/BO: Motor staging status word	This parameter displays output word from the motor staging feature that allows external connections to be made. Bit 00: Start motor 1 (yes for 1, no for 0) Bit 01: Start motor 2 (yes for 1, no for 0)
P2380[0...2]	Motor staging hours run [h]	This parameter displays hours run for external motors. **Index:** [0]: Motor 1 hrs run [1]: Motor 2 hrs run [2]: Not used Range: 0.0 to 4294967295 (factory default: 0.0)

5.6.3.14 Running the inverter in cavitation protection mode

Functionality

The cavitation protection will generate a fault/warning when cavitation conditions are deemed to be present. If the inverter gets no feedback from the pump transducer, it will trip to stop cavitation damage.

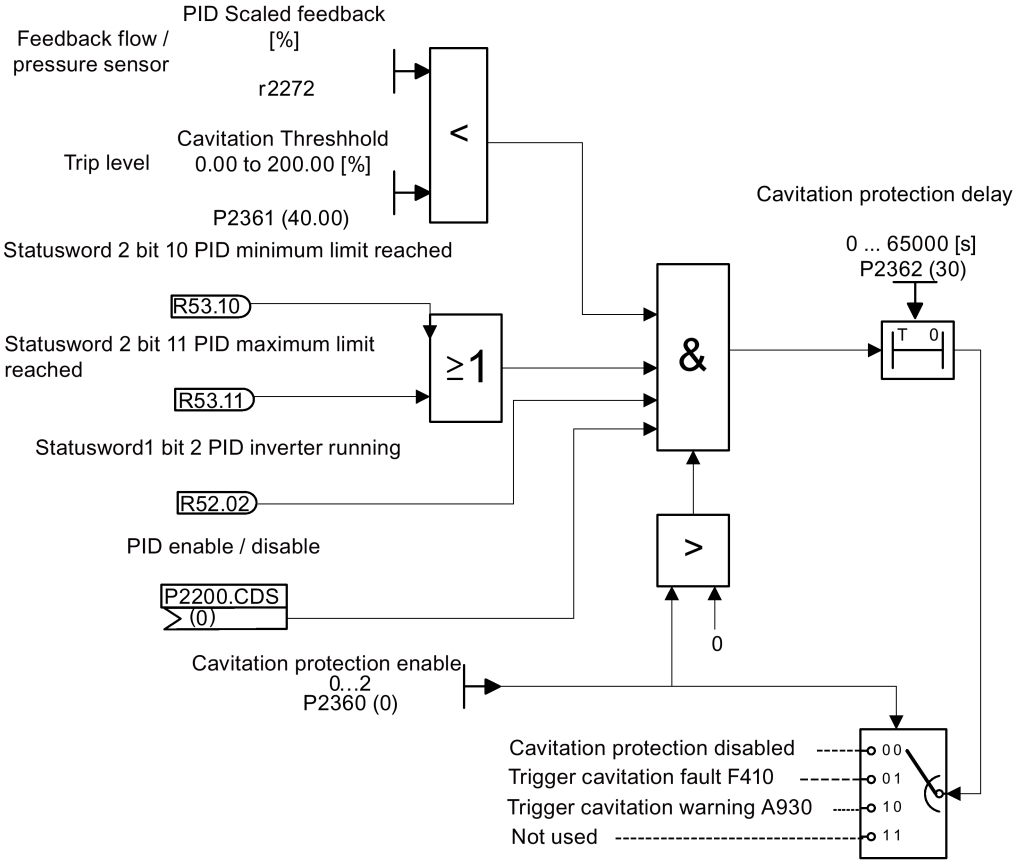

Cavitation Protection Logic Diagram

Setting parameters

Parameter	Function	Setting
P2360[0...2]	Enable cavitation protection	This parameter enables the cavitation protection function. = 1: Fault = 2: Warn
P2361[0...2]	Cavitation threshold [%]	This parameter defines the feedback threshold over which a fault/warning is triggered, as a percentage (%). Range: 0.00 to 200.00 (factory default: 40.00)
P2362[0...2]	Cavitation protection time [s]	This parameter sets the time for which cavitation conditions have to be present before a fault/warning is triggered. Range: 0 to 65000 (factory default: 30)

5.6.3.15 Setting the user default parameter set

Functionality

The user default parameter set allows a modified set of defaults, different to the factory defaults, to be stored. Following a parameter reset these modified default values would be used. An additional factory reset mode would be required to erase the user default values and restore the inverter to factory default parameter set.

Creating the user default parameter set

1. Parameterize the inverter as required.
2. Set P0971 = 21, and the current inverter state is now stored as the user default.

Modifying the user default parameter set

1. Return the inverter to the default state by setting P0010 = 30 and P0970 = 1. The inverter is now in the user default state if configured, else factory default state.
2. Parameterize the inverter as required.
3. Set P0971 = 21 to store current state as the user default.

Setting parameters

Parameter	Function	Setting
P0010	Commissioning parameter	This parameter filters parameters so that only those related to a particular functional group are selected. It must be set to 30 in order to store or delete user defaults. = 30: Factory setting
P0970	Factory reset	This parameter resets all parameters to their user default/factory default values. = 1: Parameter reset to user defaults if stored else factory defaults = 21: Parameter reset to factory defaults deleting user defaults if stored
P0971	Transfer data from RAM to EEPROM	This parameter transfers values from RAM to EEPROM. = 1: Start transfer = 21: Start transfer and store parameter changes as user default values

For information about restoring the inverter to factory defaults, refer to Section "Restoring to defaults (Page 133)".

5.6.3.16 Setting the dual ramp function

Functionality

The dual ramp function allows the user to parameterize the inverter so that it can switch from one ramp rate to another when ramping up or down to a setpoint. This may be useful for delicate loads, where starting to ramp with a fast ramp-up or ramp-down time may cause damage. The function works as follows:

Ramp up:

- Inverter starts ramp-up using ramp time from P1120
- When f_act > P2157, switch to ramp time from P1060

Ramp down:

- Inverter starts ramp-down using ramp time from P1061
- When f_act < P2159, switch to ramp time from P1121

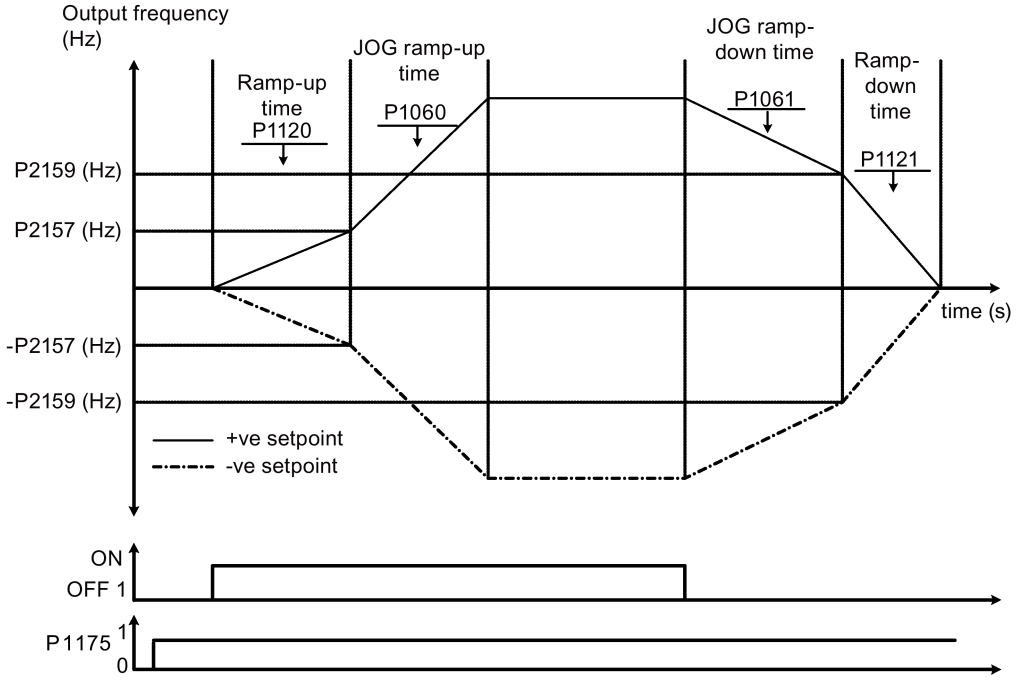

Note that the dual ramp algorithm uses r2198 bits 1 and 2 to determine (f_act > P2157) and (f_act < P2159).

Setting parameters

Parameter	Function	Setting
P1175[0...2]	BI: Dual ramp enable	This parameter defines command source of dual ramp enable command. If binary input is equal to one, then the dual ramp will be applied. The factory default value is 0.
P1060[0...2]	JOG ramp-up time [s]	This parameter sets the JOG ramp-up time. Range: 0.00 to 650.00 (factory default: 10.00)
P1061[0...2]	JOG ramp-down time [s]	This parameter sets the JOG ramp-down time. Range: 0.00 to 650.00 (factory default: 10.00)
P1120[0...2]	Ramp-up time [s]	This parameter sets the time taken for motor to accelerate from standstill up to maximum frequency (P1082) when no rounding is used. Range: 0.00 to 650.00 (factory default: 10.00)
P1121[0...2]	Ramp-down time [s]	This parameter sets the time taken for motor to decelerate from maximum frequency (P1082) down to standstill when no rounding is used. Range: 0.00 to 650.00 (factory default: 10.00)
P2157[0...2]	Threshold frequency f_2 [Hz]	This parameter defines threshold_2 for comparing speed or frequency to thresholds. Range: 0.00 to 550.00 (factory default: 30.00)
P2159[0...2]	Threshold frequency f_3 [Hz]	This parameter defines threshold_3 for comparing speed or frequency to thresholds. Range: 0.00 to 550.00 (factory default: 30.00)

5.6.3.17 Setting the DC coupling function

Functionality

The SINAMICS V20 inverter provides the facility to electrically couple two equal-size inverters together by using the DC link connections. The key benefits of this connection are:

- Reducing energy costs by using regenerative energy from one inverter as driving energy in the second inverter.
- Reducing installation costs by allowing the inverters to share one common dynamic braking module when needed.
- In some applications, eliminating the need for the dynamic braking module.

In the most common application, shown in the following figure, linking two SINAMICS V20 inverters of equal size and rating allows the energy from one inverter, presently decelerating a load, to be fed into the second inverter across the DC link. This requires less energy to be sourced from the mains supply. In this scenario, the total electricity consumption is reduced.

Connection for DC coupling

The following figure illustrates the system connection using DC coupling.

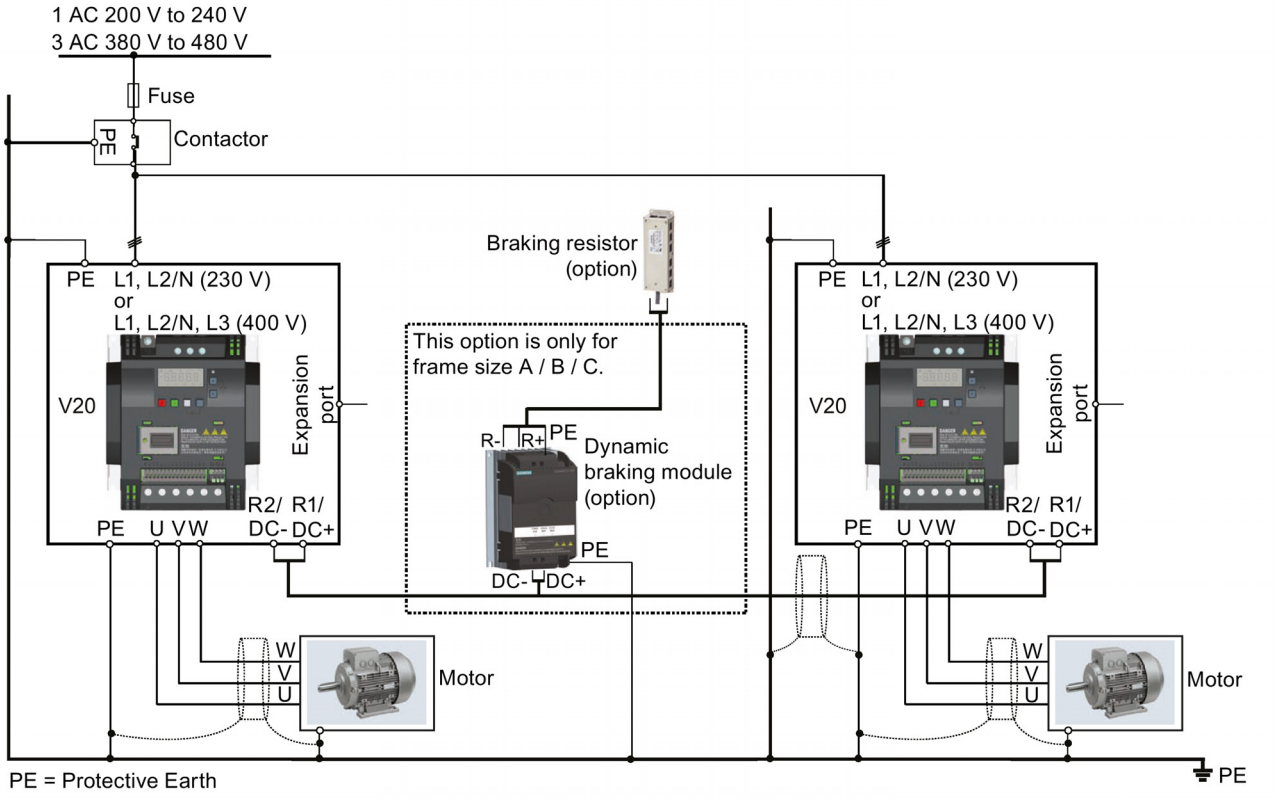

See Section "Terminal description (Page 39)" for the recommended cable cross-sections and screw tightening torques.

See the Product Information of Protective Devices for SINAMICS V20 Inverter (https://support.industry.siemens.com/cs/ww/en/ps/13208/man) for the recommended fuse types.

WARNING

Destruction of inverter

It is extremely important to ensure that the polarity of the DC link connections between the inverters is correct. If the polarity of the DC terminals' connections is reversed, it could result in the destruction of the inverter.

CAUTION

Safety awareness

The coupled SINAMICS V20 inverters must both be of equal power and supply voltage rating.

The coupled inverters must be connected to the mains supply through a single contactor and fuse arrangement rated for a single inverter of the type in use.

A maximum of two SINAMICS V20 inverters can be linked using the DC coupling methodology.

NOTICE
Integrated braking chopper The integrated braking chopper within the frame size D inverter is only active if the inverter receives an ON command and is actually running. When the inverter is powered down, the regenerative energy cannot be pulsed to the external braking resistor.

Limitations and restrictions

- The maximum length of the coupling cable is 3 metres.
- For the inverters of frame sizes A to C, if a dynamic braking module is to be used, an additional connector with a current rating the same as the supply cable to one inverter must be used to connect the dynamic braking module wires to DC+ and DC- since the Inverter terminals may not support an additional connection.
- The cable rating to the dynamic braking module needs to be at least 9.5 A for a 5.5 kW full power rating (as measured using a minimum resistor value of 56 Ω). Screened cable should be used.
- For the inverters of frame size D for three phase, the dynamic braking circuit is self-contained and only one external braking resistor has to be attached to one of the inverters. Refer to Appendix "Braking resistor (Page 358)" for the selection of an appropriate braking resistor.
- The compound braking must never be activated.

Note

Performance and potential energy savings

The performance and potential energy savings using the DC coupling function is highly dependent on the specific application. Therefore, Siemens makes no claim regarding the performance and energy saving potential of the DC coupling methodology.

Note

Standards and EMC disclaimers

The DC coupling configuration with the SINAMICS V20 inverters is not certified for use in UL/cUL applications.

No claims are made regarding the EMC performance of this configuration.

See also

Typical system connections (Page 34)

5.6.3.18 Setting high/low overload (HO/LO) mode

Functionality

Setting HO/LO overload enables you to select the low-overload mode for pumps and fans, the most important target applications of SINAMICS V20 inverters. Low-overload mode can improve the rated output current of the inverter and therefore allows the inverter to drive motors of higher power.

Torque	$M \sim \frac{1}{f}$	M = const.	M ~ f	$M \sim f^2$
Power	p = const.	p ~ f	$p \sim f^2$	$p \sim f^3$
Characteristic	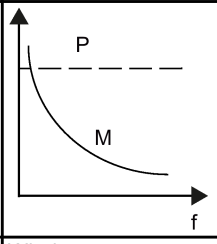	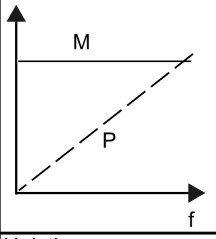	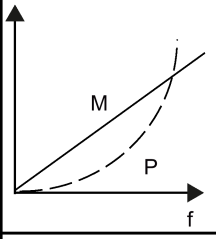	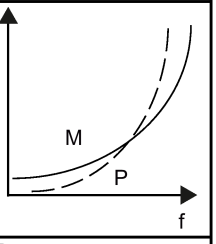
Application	Winders Facing lathes Rotary cutting machines	Hoisting gear Belt conveyors Process machines involving forming Rolling mills Planers Compressors	Calenders with viscous friction Eddy-current brakes	Pumps Fans Centrifuges

Typical application fields

- High overload: conveyors, agitators and centrifuges
- Low overload: pumps and fans

Power ratings

Rated power rating (HO mode)	18.5 kW	22 kW
Rated power rating (LO mode)	22 kW	30 kW

Taking the 22 kW SINAMICS inverter as an example, when HO mode is selected, it means the rated power rating is 22 kW; when LO mode is selected, the rated power rating is changed to 30 kW.

- HO mode

  Overload capability: 150% of the rated output current for 60 s

  Cycle time: 300 s

- LO mode:

  Overload capability: 110% of the rated output current for 60 s

  Cycle time: 300 s

Setting parameter

Parameter	Function	Setting
P0205	Select inverter applications	This parameter selects the inverter applications on high overload and low overload: =0: high overload =1: low overload

Function diagram

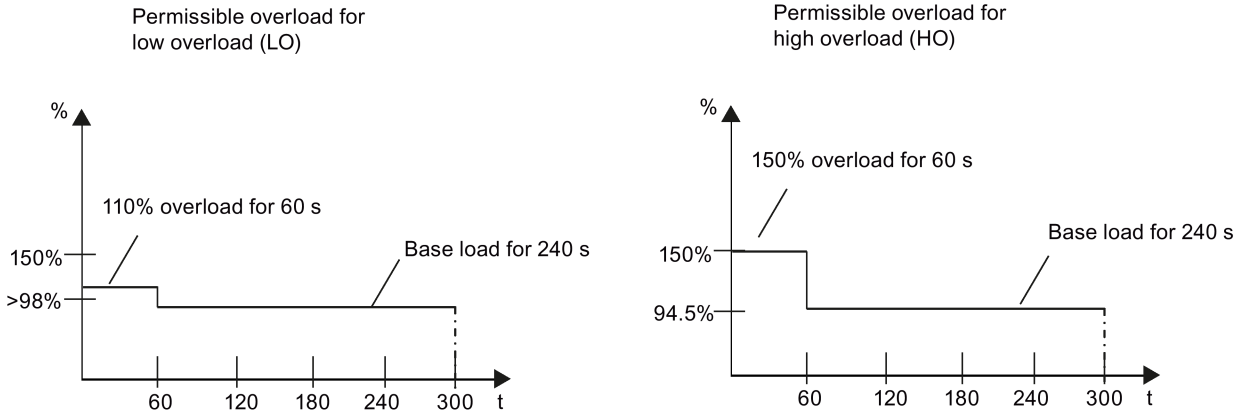

5.7 Restoring to defaults

Restoring to factory defaults

Parameter	Function	Setting
P0003	User access level	= 1 (standard user access level)
P0010	Commissioning parameter	= 30 (factory setting)
P0970	Factory reset	= 21: parameter reset to factory defaults deleting user defaults if stored

Restoring to user defaults

Parameter	Function	Setting
P0003	User access level	= 1 (standard user access level)
P0010	Commissioning parameter	= 30 (factory setting)
P0970	Factory reset	= 1: parameter reset to user defaults if stored, else factory defaults

After setting the parameter P0970, the inverter displays "8 8 8 8 8" and then the screen shows "P0970". P0970 and P0010 are automatically reset to their original value 0.

Commissioning using SINAMICS V20 Smart Access 6

Using the optional SINAMICS V20 Smart Access (Page 386) to commission the inverter provides you with a smart commissioning solution.

SINAMICS V20 Smart Access is a Web server module with integrated Wi-Fi connectivity. It allows Web-based access to the inverter from a connected device (conventional PC with wireless network adapter installed, tablet or smart phone).

Note

To avoid any unauthorized Web access, use the SINAMICS V20 Smart Access with the inverter only when you perform the Web-based inverter commissioning.

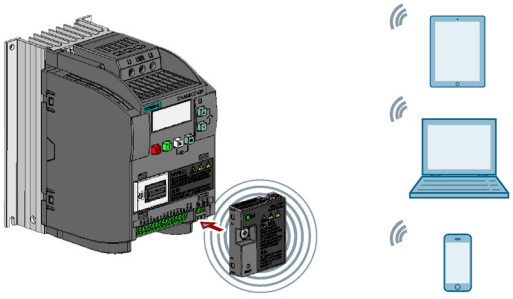

Note

To use SINAMICS V20 Smart Access to control the inverter, the supported inverter firmware version must be 3.92 or later.

With SINAMICS V20 Smart Access, you can easily perform the following operations via Web access to the inverter:

- Quick inverter commissioning (Page 145)
- Inverter parameterization (Page 150)
- Motor operation in JOG/HAND mode (Page 155)
- Inverter status monitoring (Page 157)
- Fault/alarm diagnostics (Page 157)
- Data backup and restore (Page 160)
- Wi-Fi configuration (Page 142)
- User interface language selection (Page 144)
- Web application and SINAMICS V20 Smart Access firmware upgrade (Page 164)
- Inverter time synchronization with the connected device (Page 144)

6.1 System requirements

Device with wireless network adapter installed	Operating system	Recommended Web browser
PC	Windows 7	• Google Chrome version 56.0 or later • Firefox version 53.0 or later • Internet Explorer version 11.0.9600 or later
Smart phone/tablet	Apple iOS 10.2 or later	• Google Chrome version 55.0 or later • Firefox version 6.1 or later • Safari
	Android 7.0 or later	• Google Chrome version 58.0 or later • Firefox version 53.0 or later

Supported minimum resolution

SINAMICS V20 Smart Access displays the pages in a format and size compatible with the device you use to access the Web pages. It supports a minimum resolution of 320 x 480 pixels.

6.2 Accessing the SINAMICS V20 Web pages

You can access the SINAMICS V20 Web pages from a PC or a mobile device that connects to the SINAMICS V20 Smart Access.

Note

Fitting SINAMICS V20 Smart Access to the inverter is required only when you desire to make Web-based access to the inverter from your PC or mobile device.

6.2.1 Overview of the steps

Note

Prerequisite

Before fitting SINAMICS V20 Smart Access to V20, if RS485 communication is present, then you must set P2010[1] = 12 via the BOP.

1. Fitting SINAMICS V20 Smart Access to the inverter (Page 137)
2. Establishing the wireless network connection (Page 137)
3. Accessing the Web pages (Page 139)

6.2.2 Fitting SINAMICS V20 Smart Access to the inverter

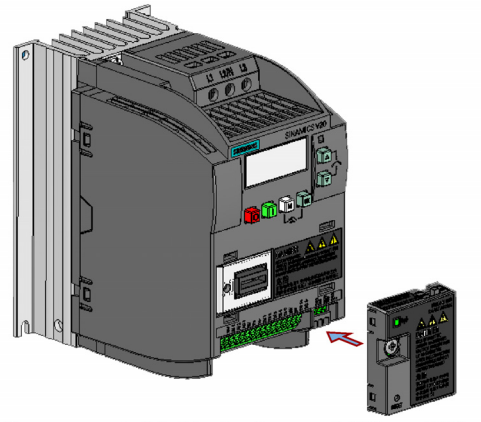

Recommended tightening torque: 0.8 Nm ± 10%

NOTICE

Damage to module due to improper installing or removing

Installing or removing SINAMICS V20 Smart Access when its power switch is in the "ON" position can cause damage to the module.

Make sure that you slide the power switch to "OFF" before installing/removing the module.

NOTICE

Equipment malfunctions due to improper installing or removing

Installing or removing the SINAMICS V20 Smart Access when the V20 inverter is in power-on state can cause malfunctions of the SINAMICS V20 Smart Access.

- Make sure that the V20 inverter is powered off before installing or removing the SINAMICS V20 Smart Access.

Note

To reduce human exposure to radio frequency electromagnetic fields, maintain a minimum distance of 2.5 cm between your body and the SINAMICS V20 Smart Access when it is operational.

6.2.3 Establishing the wireless network connection

NOTICE

Equipment malfunctions as a result of unauthorized access to the inverter

Hacker attack can result in unauthorized access to the inverter through the SINAMICS V20 Smart Access. This can cause equipment malfunctions.

- Before logging on to the V20 Web pages, make sure that there is no network security risk.
  - If the status LED lights up green or flashes green, make sure that no unauthorized access to the inverter exists.
  - If an unauthorized access to the inverter does exist, switch off the power switch on SINAMICS V20 Smart Access and then switch it on again to restart the wireless network connection.

Establishing initial wireless network connection

1. After you have fitted the SINAMICS V20 Smart Access (Page 386) to the inverter, power on the SINAMICS V20 Smart Access by sliding its switch to the "ON" position.
2. Activate the Wi-Fi interface inside your PC or mobile device. If you desire to establish the wireless network connection on your PC, make sure that you have previously activated the automatic IP settings.
3. Search the wireless network SSID of SINAMICS V20 Smart Access: V20 smart access_xxxxxx ("xxxxxx" stands for the last six characters of the MAC address of SINAMICS V20 Smart Access)
4. Enter the wireless network password to launch the connection (default password: 12345678).

   You can configure your own Wi-Fi name and channel. For more information, see Section "Configuring Wi-Fi (Page 142)".
5. Enter the IP address of the connected inverter (http://192.168.1.1) in the supported browser.
6. After the Web page for password change opens, enter a new password.

   To achieve better network access security, enter a new password of 8 to 12 characters that consists all of the following three categories of password characters: ① letters: A-Z, a-z; ② numbers: 0-9; ③ special characters: _, -, ~, ! , @, #, $, %, ^, &, and *, and the space character is not allowed.

   Note that this password change page includes a security level indicator. This indicator uses different colors to indicate the security strength of your current password. For more information, see the table below:

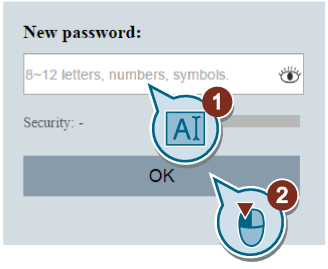

To display/hide the password, click.

Password security level	Description
Low	Password that consists of only one category of characters
Medium	Password that consists of two categories of characters
High	Password that consists of three categories of characters

   After your confirmation of the new password entry, the module restarts automatically.
7. Select the wireless network SSID of the SINAMICS V20 Smart Access and then enter the new Wi-Fi password to launch the connection.
8. Enter the IP address (http://192.168.1.1) to open the home page.

Wireless network connection examples

Note

Prerequisite

Make sure that your device is wireless-enabled.

For Windows 7	For Android and iOS (on tablets/smart phones)
1. Click on the taskbar on your PC. 2. Select the target network and enter the wireless password to launch the connection. 	Go to the Wi-Fi settings window on your tablet or smart phone, select the target network and enter the wireless password to launch the connection. 

6.2.4 Accessing the Web pages

If you have previously established the wireless network connection (Page 137) between your PC or mobile device and the inverter via the SINAMICS V20 Smart Access, open a supported Web browser (Page 136) from your PC or mobile device and then enter the IP address (http://192.168.1.1) to open the SINAMICS V20 Web page (home page).

Constraint

Some features of SINAMICS V20 Smart Access are restricted if you do not observe the following:

- The standard Web pages use JavaScript. If your Web browser settings have disabled JavaScript, enable it first.
- When accessing the V20 Web pages from a mobile device, do not use landscape mode.

6.3 Overview of the Web pages

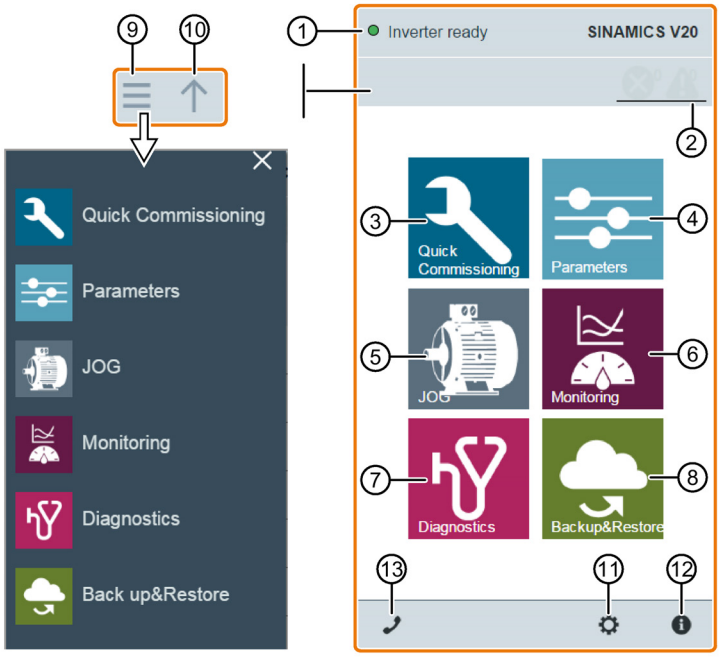

① Connection status indication (Page 141)
② Fault/alarm indication (Page 157)
③ Quick commissioning wizard (Page 145)
④ Parameter settings (Page 150)
⑤ Motor test run in JOG/HAND mode (Page 155)
⑥ Inverter status monitoring (Page 157)
⑦ Diagnostics (Page 157) (faults, alarms, I/O status)
⑧ Data backup & restore (Page 160)
⑨ Navigation sidebar (visible only on lower-level pages)
⑩ Advancing backward (visible only on lower-level pages)
⑪ Optional Web access settings (Page 142) (Wi-Fi configuration, user interface language settings, time synchronization, and upgrade)
⑫ Inverter identification data (Page 141)
⑬ Support information (Page 167)

Note

The Web page illustrations from this chapter forward represent only the standard PC Web page appearance.

6.4 View connection status

You can view the connection status in the upper-left corner of the V20 Web pages. The connection status is updated every five seconds.

Icon	Status	Description
●	Connected	Communication between the PC/mobile device and the inverter is established. Note that the green status icon indicates one of the following actual inverter statuses (see r0002): • Commissioning mode • Inverter ready • Inverter fault active • Inverter starting • Inverter running • Inverter stopping • Inverter inhibited
○	Disconnected	Communication between the PC/mobile device and the inverter is not established.

6.5 Viewing inverter information

The inverter identification Web page displays detailed information of the currently connected inverter:

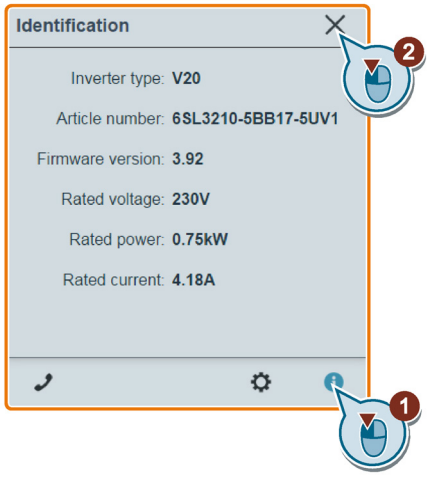

6.6 Making optional Web access settings

You can make the following optional Web access settings:

- Wi-Fi configuration (Page 142)
- User interface language selection (Page 144)
- Inverter time synchronization with the connected device (Page 144)
- Web application and firmware version upgrade (Page 144)
- Viewing the additional information of the module (Page 145)



6.6.1 Configuring Wi-Fi

If you do not want to use the default Wi-Fi settings, you can make Wi-Fi configuration in the following dialog box:

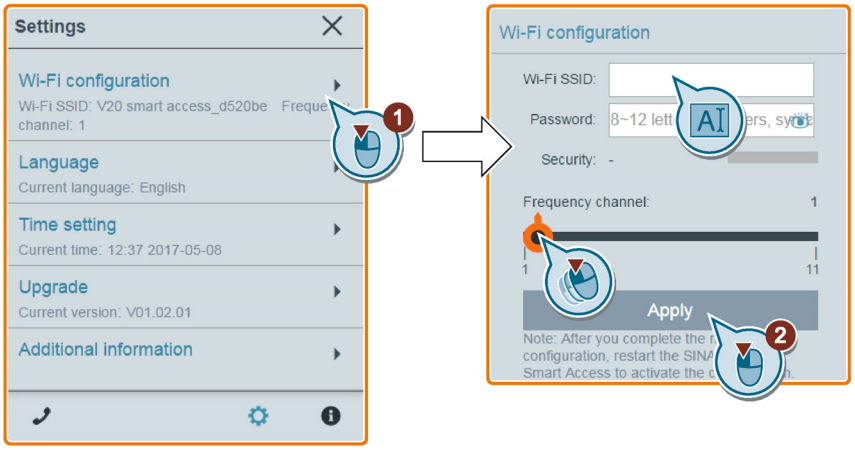

Note that the new Wi-Fi configuration can be effective only after SINAMICS V20 Smart Access restarts.

Wi-Fi SSID (Service Set Identifier)

Default SSID: V20 smart access_xxxxxx ("xxxxxx" stands for the last six characters of the MAC address of SINAMICS V20 Smart Access)

Example SSID: V20 smart access_a4d3e1

SSID character restrictions: maximum 30 characters which are limited to A-Z, a-z, 0-9, _, -, ~, ! , @, #, $, %, ^, &, *, or space. Note that the first and the last character must not be a space.

Wi-Fi password

Default password: 12345678

Password restrictions: 8 to 12 characters which are limited to A-Z, a-z, 0-9, _, -, ~, ! , @, #, $, %, ^, & and *. Note that the space character is not allowed.

Note that this password setting page includes a password security level indicator. Three security levels are indicated as follows depending on the complexity of the new password:

Password security level	Meaning
Low	Password that consists of only one category of characters
Medium	Password that consists of two categories of characters
High	Password that consists of three categories of characters

To display/hide the password, click👁.

Frequency channel

Default channel: channel 1.

Total channels: 11. Each channel stands for a transmitting frequency. The frequency difference between two adjacent channels is 5 MHz. You can select a desired channel with the slider.

Resetting Wi-Fi configuration

When the inverter is in power-on state, pressing the reset button on SINAMICS V20 Smart Access resets the Wi-Fi configuration to defaults.

Note

Check and make sure the status LED lights up solid green/solid yellow or flashes green before pressing the reset button to reset the Wi-Fi configuration. After you press the reset button, make sure you keep the button pressed until the status LED flashes yellow. Only then can the Wi-Fi configuration be reset successfully with the reset button.

6.6.2 Changing the display language

The SINAMICS V20 Web pages support the following user interface languages: English (default), Chinese, German, Italian, and French. Select the desired one from the following list:

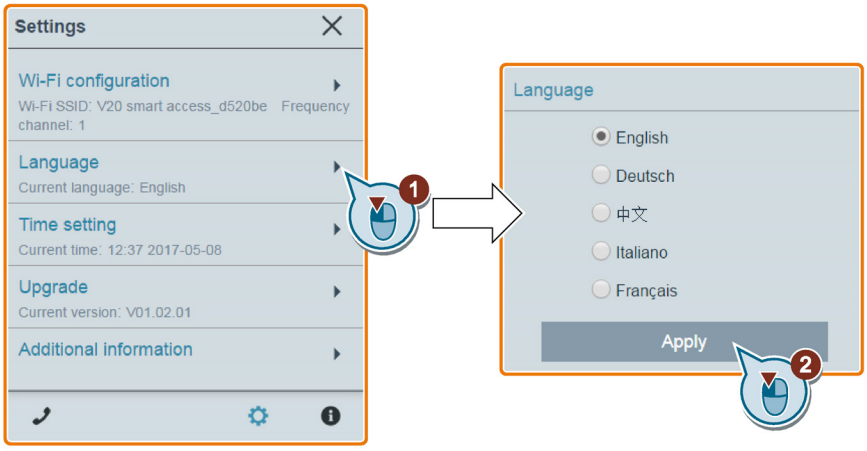

6.6.3 Synchronizing the time

When the connection between the inverter and the PC/mobile device is established, the Web page can display the current time and date information of the connected PC/mobile device (see below). You can enable time synchronization between the inverter and the connected PC/mobile device to record the occurrence time of inverter faults/alarms. When you enable synchronization, the inverter receives the time of day from the connected PC/mobile device.

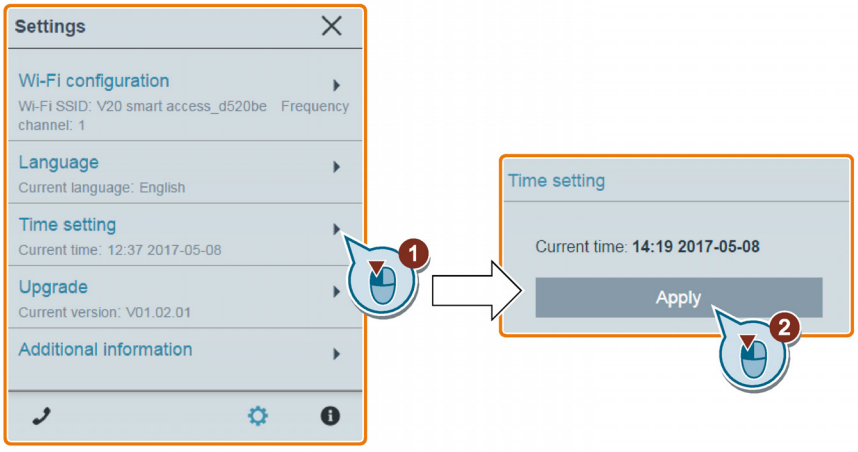

6.6.4 Upgrading

Upgrading includes conventional upgrading and basic upgrading. For more information, see Section "Upgrading Web application and SINAMICS V20 Smart Access firmware versions (Page 164)".

6.6.5 Viewing additional information

The following window provides additional information about the SINAMICS V20 Smart Access:

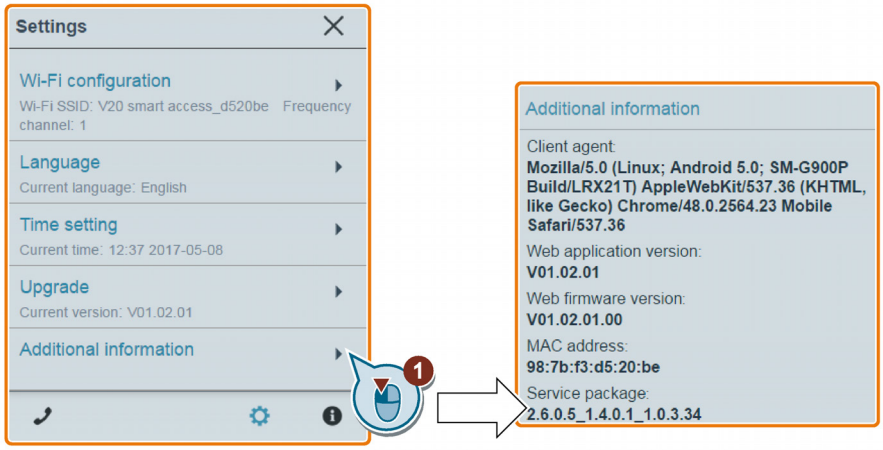

6.7 Quick commissioning

The quick commissioning function enables you to set motor parameters, connection macros, and application macros of the SINAMICS V20 inverter.

Operating sequence

1. Open the quick commissioning Web page by selecting the quick commissioning wizard icon from either the home page or the navigation sidebar.
2. Proceed as follows. Quick commissioning will change the following three groups of parameters at a time.

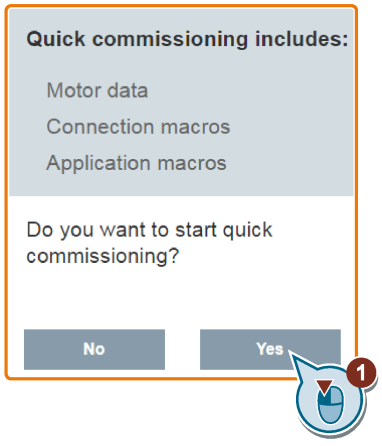

3. Perform a factory reset of the inverter if the current settings of the inverter are unknown.

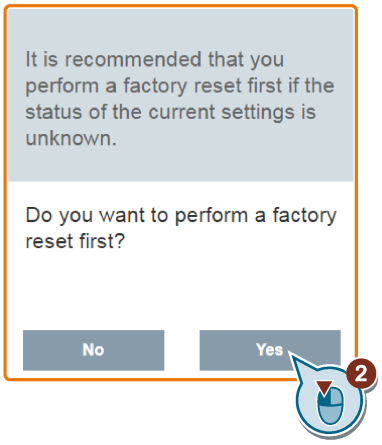

4. Change motor parameters (Page 63) settings, if desired.

   Note that there are three methods to edit parameter values (see example below for changing the P0100 and P0304 values):

   - Directly select the desired option (example: P0100).
   - Move the slider to select the desired value (example: P0304).
   - Use the on-screen numeric keypad (example: P0304). Be aware that continuous clicking on the Delete key (the "x" sign key) on the numeric keypad deletes the current parameter value.

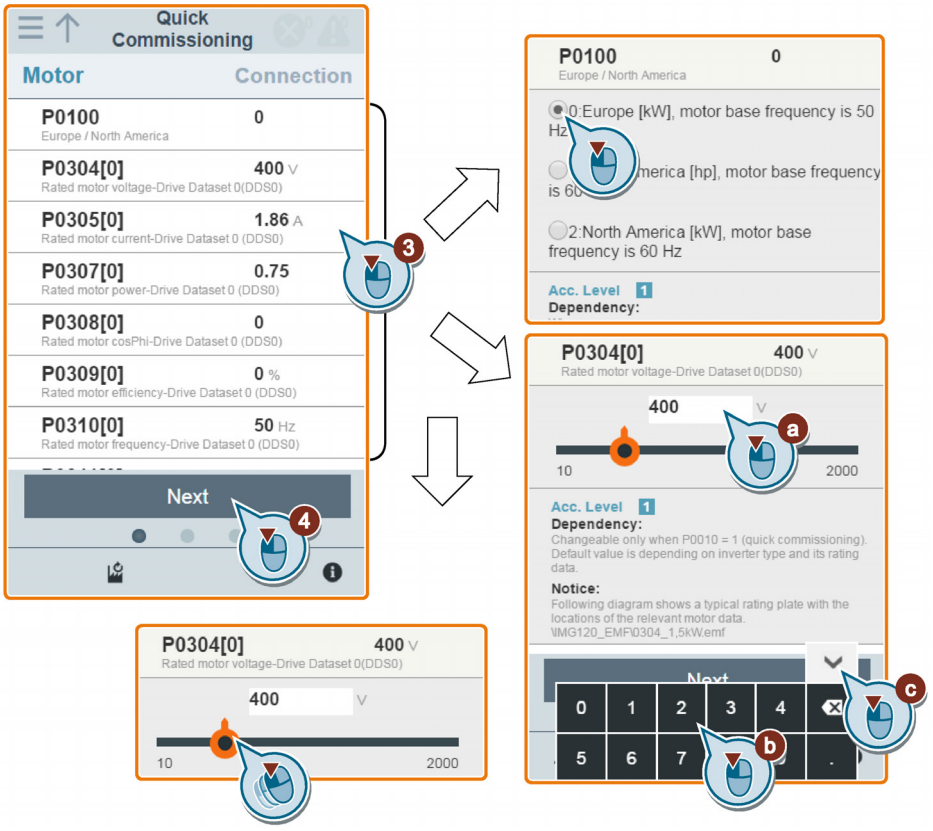

5. Select the desired connection macro (Page 65).

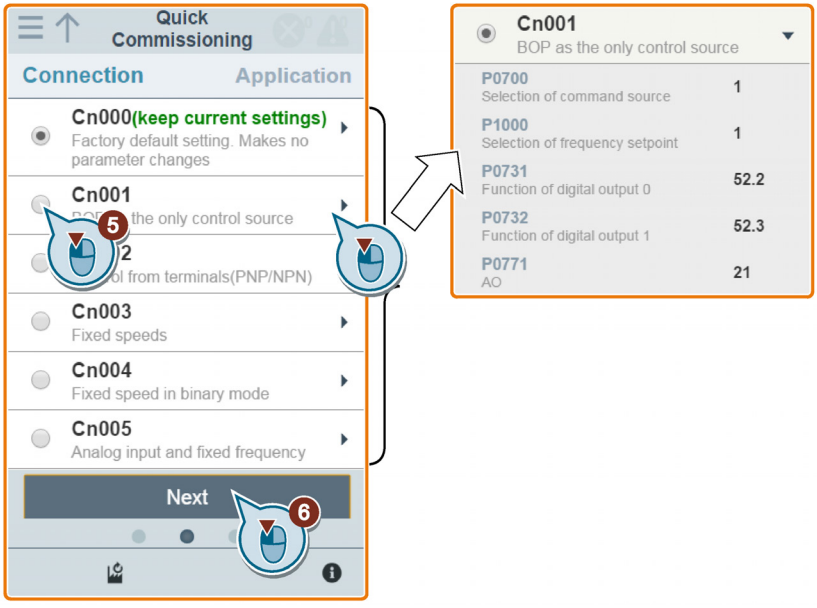

6. Select the desired application macro (Page 76).

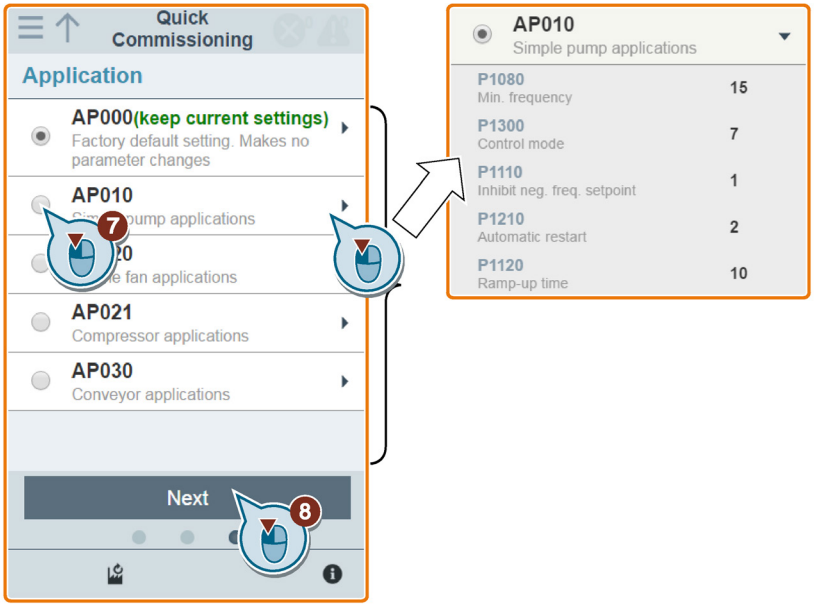

7. Confirm to start writing parameter settings to the inverter. SINAMICS V20 Smart Access then starts the automatic optimization process.

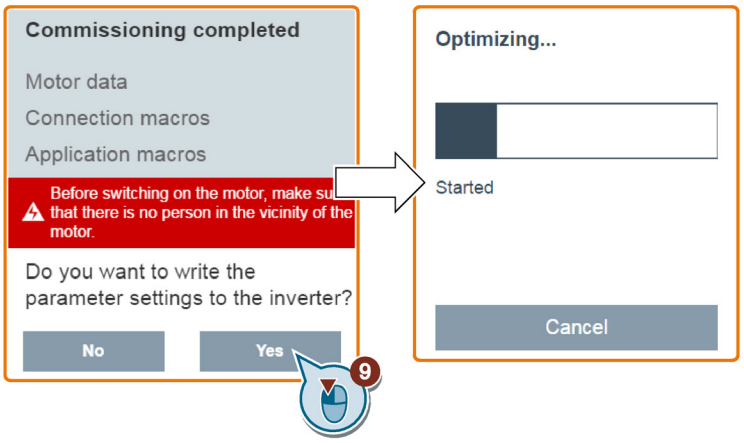

8. Confirm completion of the quick commissioning when the following window appears. If the Web page indicates that the optimization fails, you can select to try optimization again.

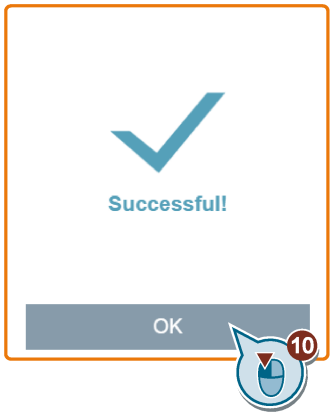

9. After the quick commissioning finishes successfully, the Web page switches to the following page where you can change the settings of the user-defined parameters, if desired. If you have not defined any parameter as a user-defined parameter, the common parameters (Page 78) are added to this parameter group automatically.

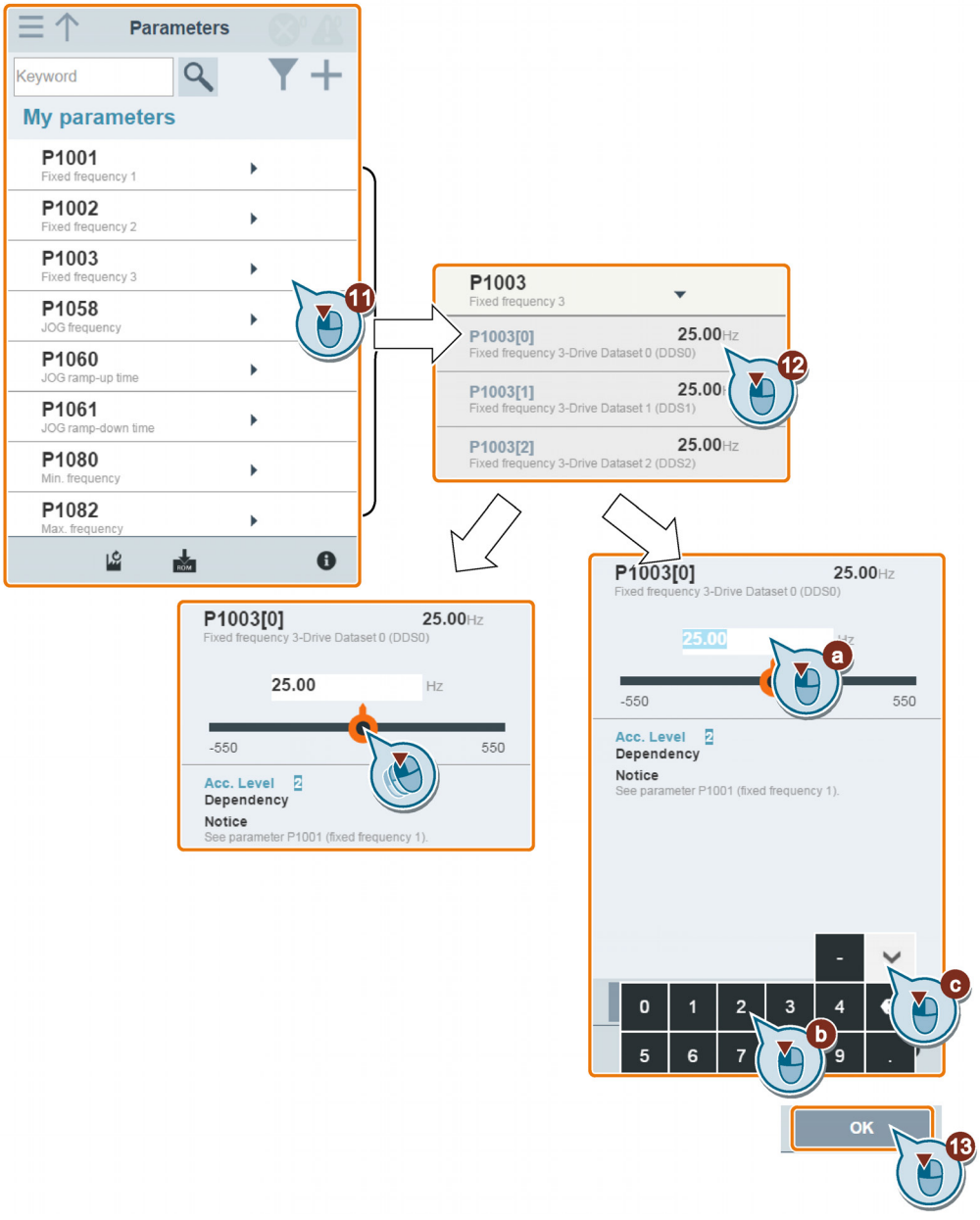

6.8 Setting parameters

You can open the parameters Web page by selecting the parameters icon from either the home page or the navigation sidebar.

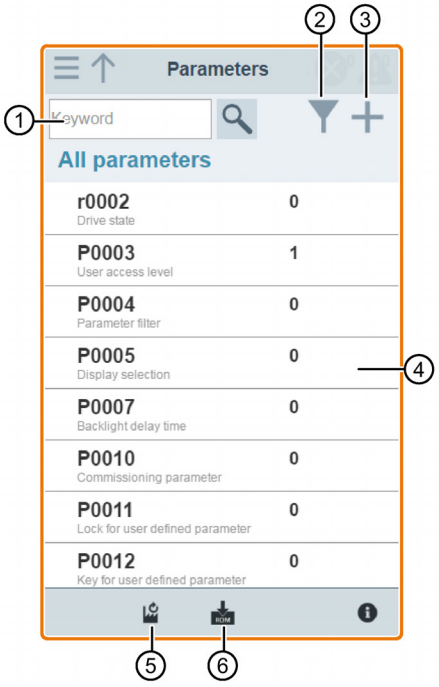

① Searching parameters
② Filtering parameters by group
③ Specifying user-defined parameters
④ Editing parameters
⑤ Resetting parameters
⑥ Saving parameters

Editing parameters

The figure below shows different methods for editing parameters. Note that when editing a BICO parameter (example: P0810), if you do not want to quickly navigate to a value by entering the first number(s), skip step 2.

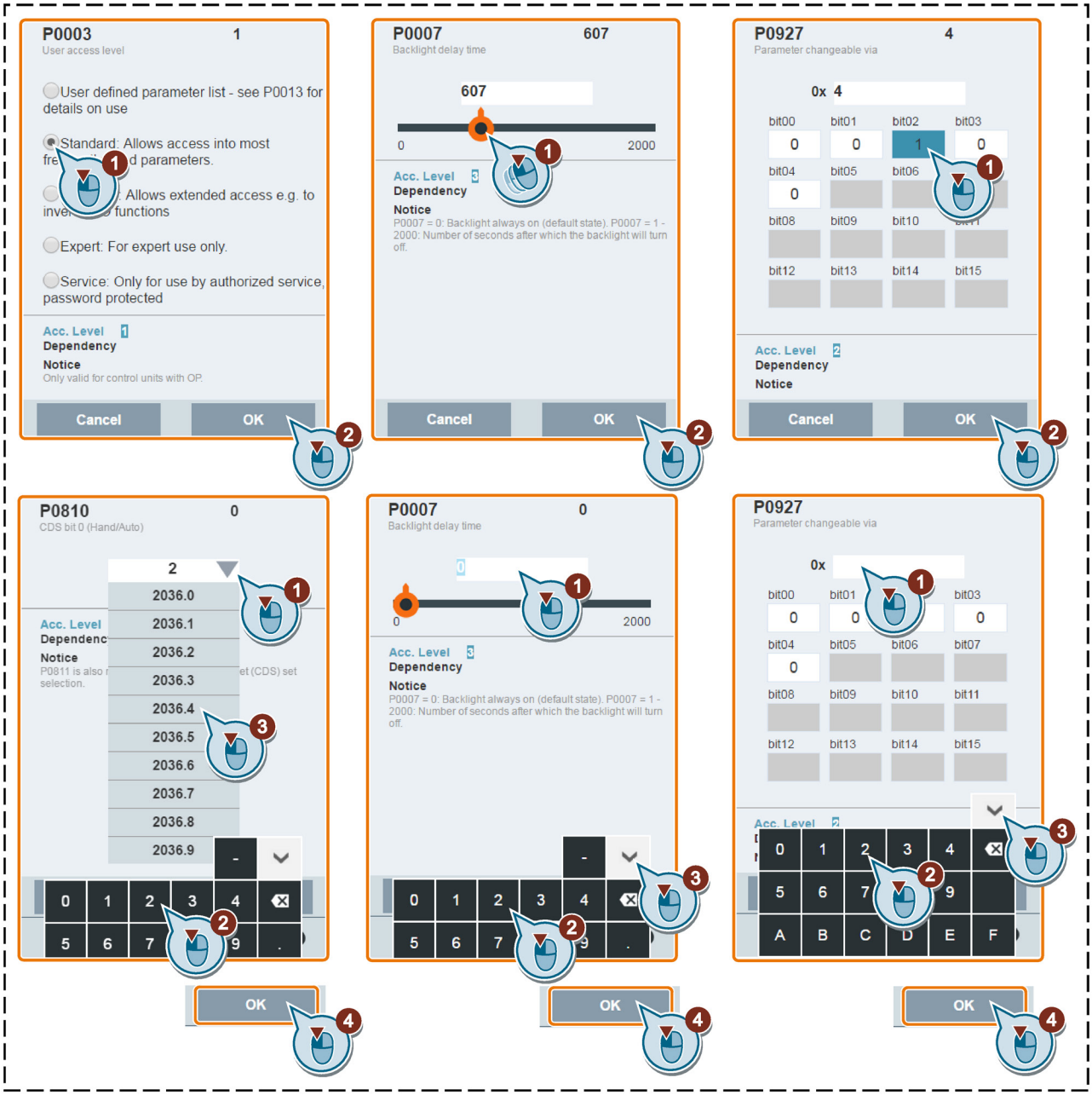

Searching parameters

You can search parameters by entering a key word, that is, either a complete parameter number or part of it. If you do not enter any key word and then select the magnifying glass icon, the page shows the list of all parameters visible on the Web page.

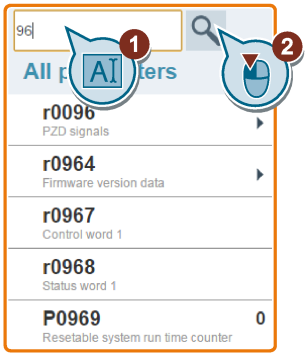

Filtering parameters

You can view and set parameters in the target parameter group.

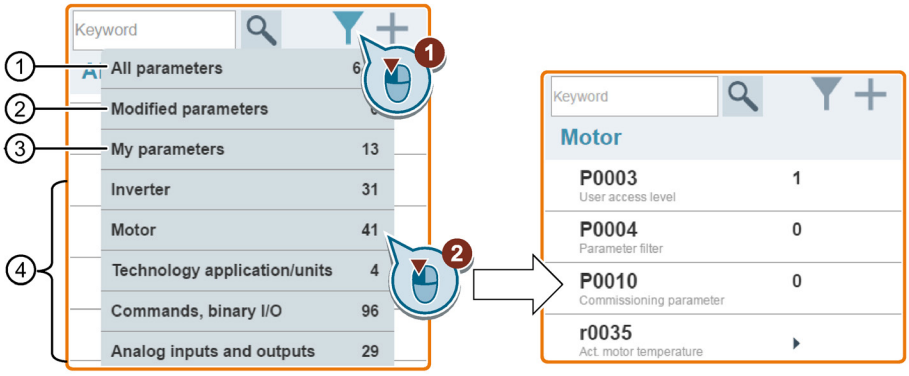

① Complete list of all visible parameters
② List of all modified parameters
③ User-defined parameters
④ Other parameter groups

Specifying user-defined parameters

If you desire to define certain parameters (including any specific indexed parameters) in a target group to be user-defined parameters, proceed as the example given below:

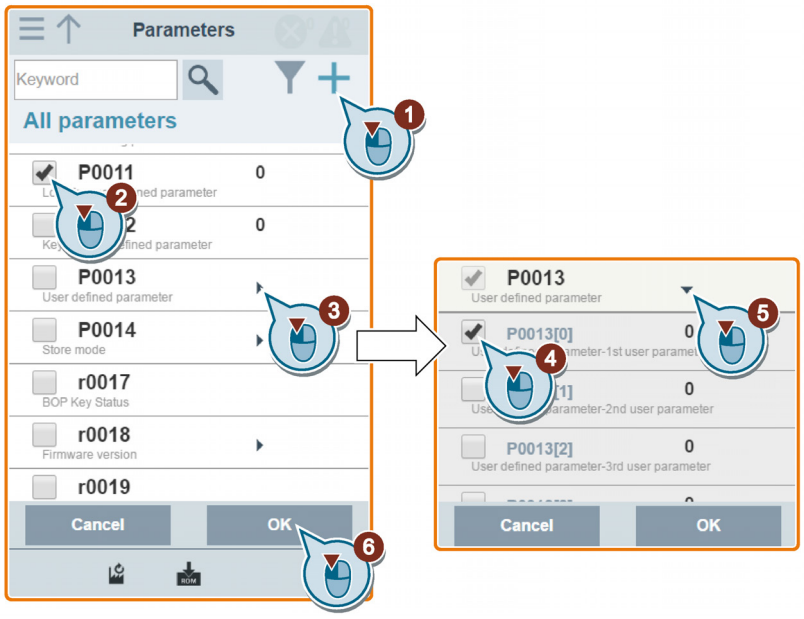

Note that all successfully defined parameters will go to the following parameter group:

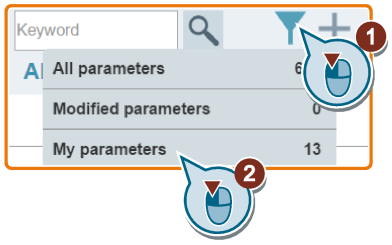

Resetting parameters to defaults

You can select to reset all parameters to either user defaults or factory defaults.

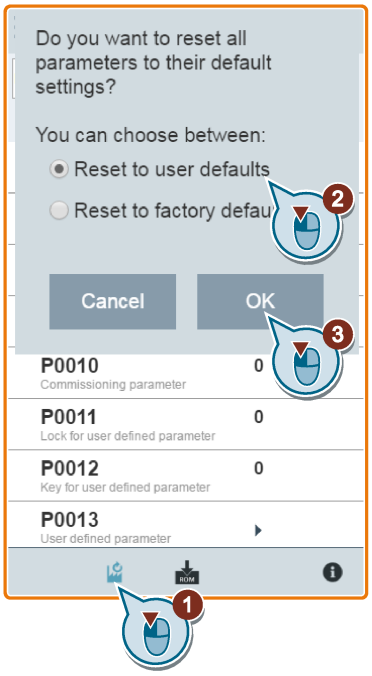

Saving parameters to EEPROM

You can select to save all parameter settings to EEPROM only or save to EEPROM as new user defaults.

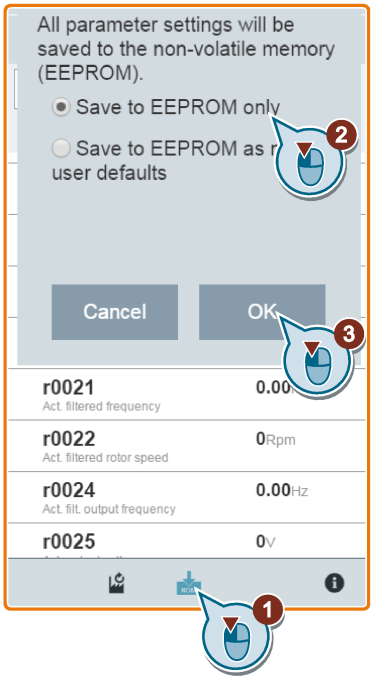

6.9 Starting motor test run (JOG/HAND)

You use this Web page to start the motor test run in JOG or HAND mode.

Operating sequence

1. Open the JOG Web page by selecting the JOG icon from either the home page or the navigation sidebar.
2. Proceed as follows to get the control of the motor.

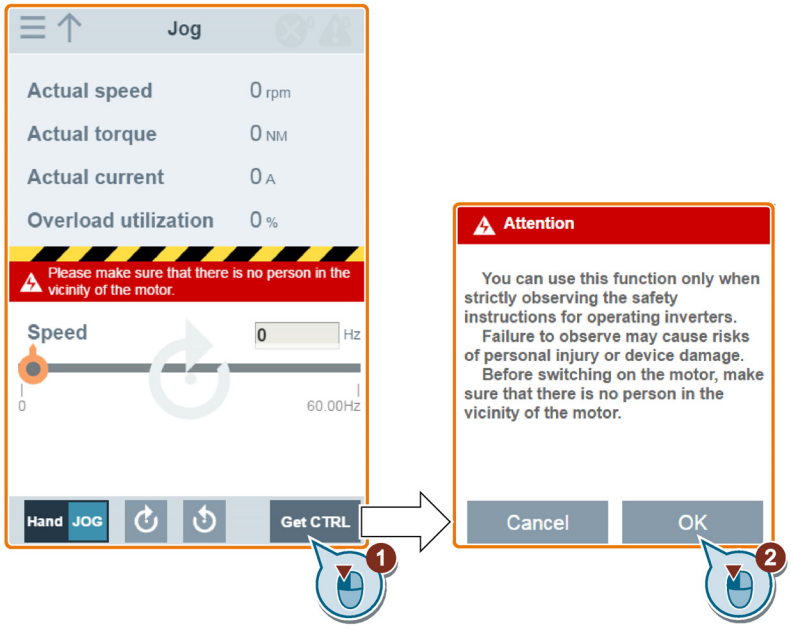

3. Run the motor in JOG or HAND mode (default mode: JOG).
   Note that if desired, you can also test the motor rotation direction with the corresponding button ("①"). The page shows the currently selected rotation direction ("②").
   - Press the desired button ("①") to run the motor in JOG mode:

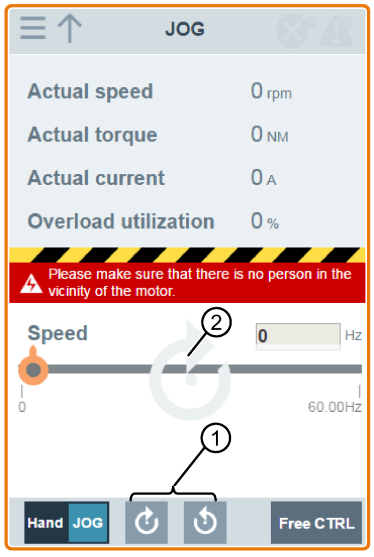

- Proceed as follows to run the motor in HAND mode:

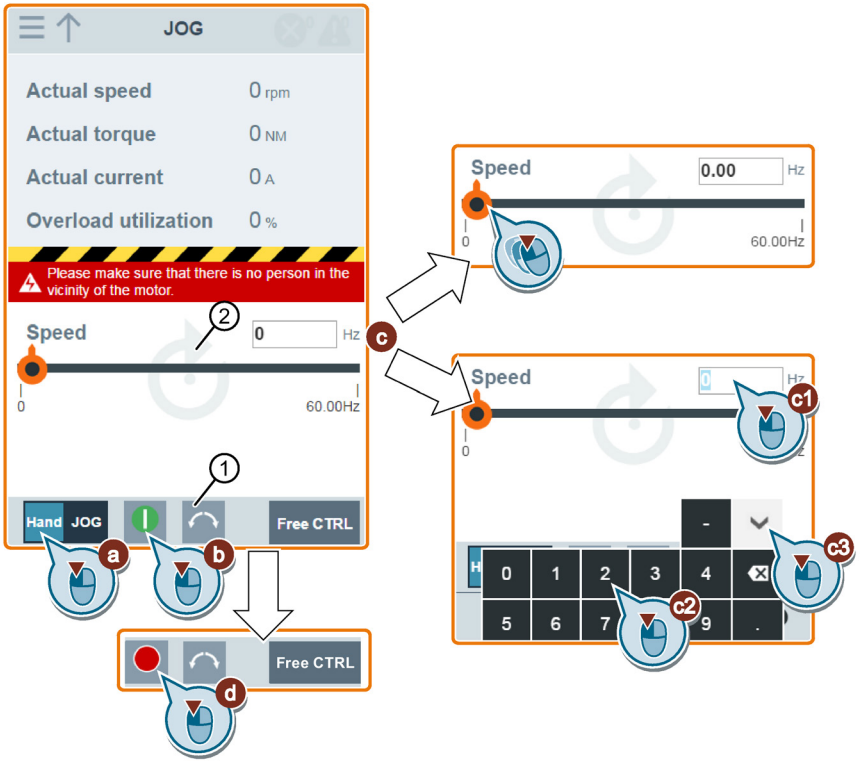

4. After you finish the motor test run, proceed as follows to return the control of the motor:

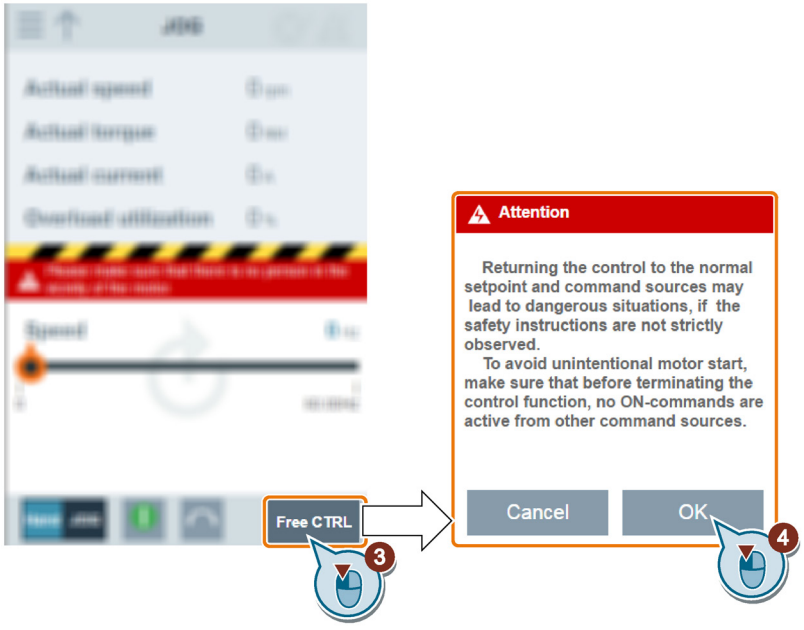

Note that before returning the control, make sure there is no inverter output and the motor stops running.

6.10 Monitoring

You can open the inverter status monitoring Web page by selecting the monitoring icon from either the home page or the navigation sidebar.

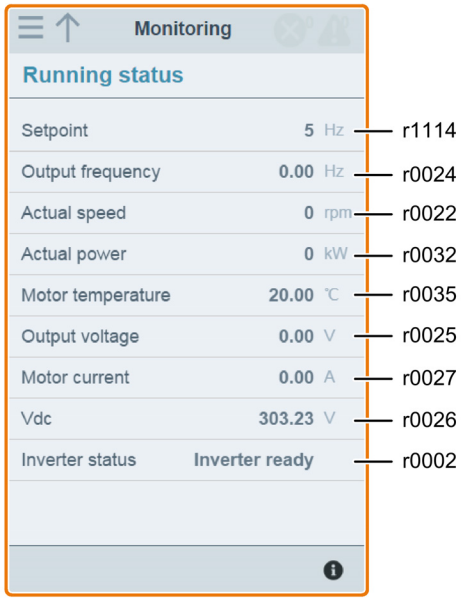

6.11 Diagnosing

You can open the diagnostics Web page by selecting the diagnostics icon from either the home page or the navigation sidebar. On this page, you can view faults/alarms, acknowledge all faults or send all faults by e-mail; you can also view I/O status and status bit information.

Meaning of fault/alarm icons

Fault and alarm icons are shown on the upper-right corner of the V20 Web page. See the following example for possible icon display:

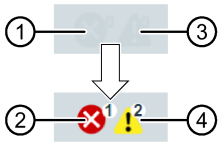

Fault icons	
①	No active fault present
②	Active fault present (in this example: one active fault present)
Alarm icons	
③	No active alarm present
④	Active alarms presents (in this example: two active alarms present)

If the fault/alarm icon indicates presence of active faults/alarms, always go to the diagnostics page to view the detailed information.

Fault/alarm diagnostics

On this subpage, you can view detailed fault/alarm information, acknowledge all faults, or send all faults by e-mail (recommended on PC).

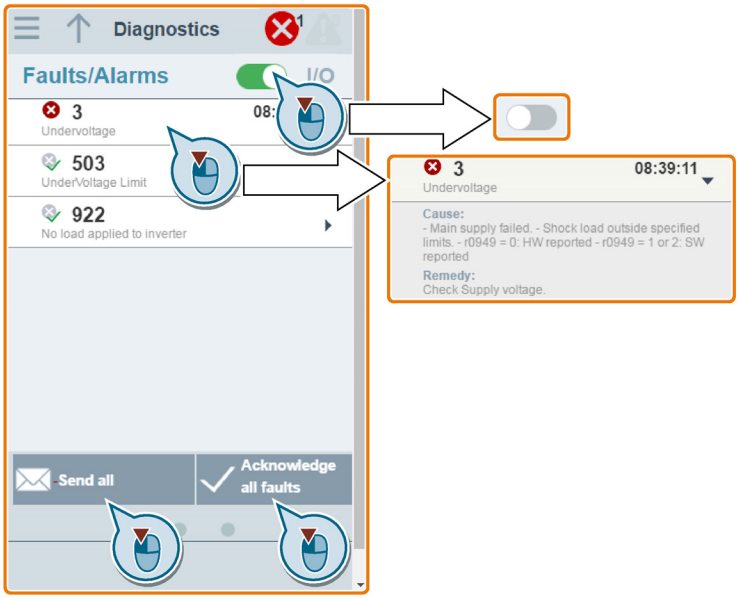

You can use the filter button to display all faults and alarms or the active ones only.

Button status	Description
	Displays the active faults and alarms only
	Displays all faults and alarms

Note: The module does not read the updates of active faults or alarms from the inverter until you collapse all faults and alarms.

For more information about the maximum number of faults/alarms that can be recorded, see parameters r0947/r2110 in Section "Parameter list (Page 187)".

I/O status diagnostics

This subpage displays the detailed I/O status information.

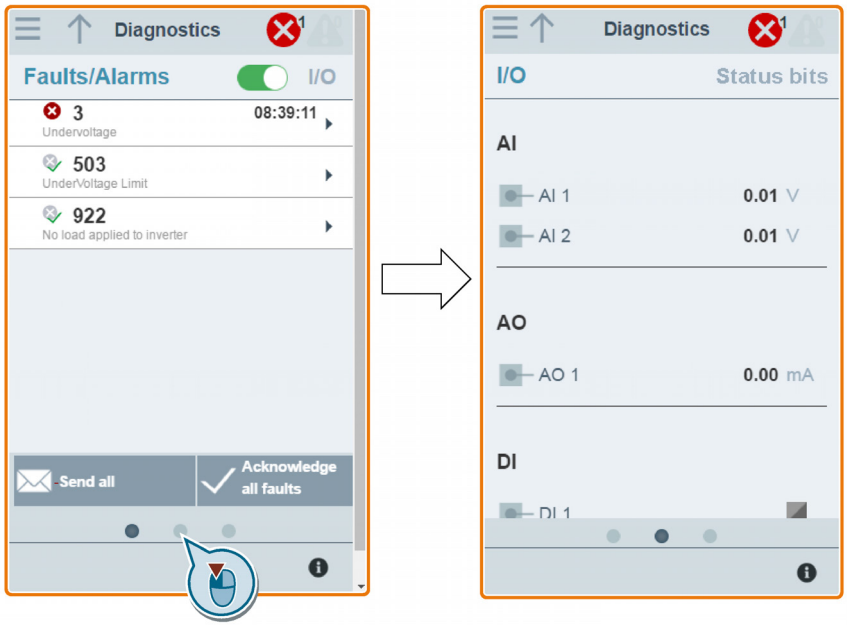

Relevant parameters

Parameter	Function
r0722.0...12	CO/BO: Digital input values
r0747.0...1	CO/BO: State of digital outputs
r0752[0...1]	Actual analog input [V] or [mA]
P0756[0...1]	Type of analog input
P0771[0]	CI: Analog output
r0774[0]	Actual analog output value [V] or [mA]

Status bit diagnostics

This subpage displays the detailed status bit information.

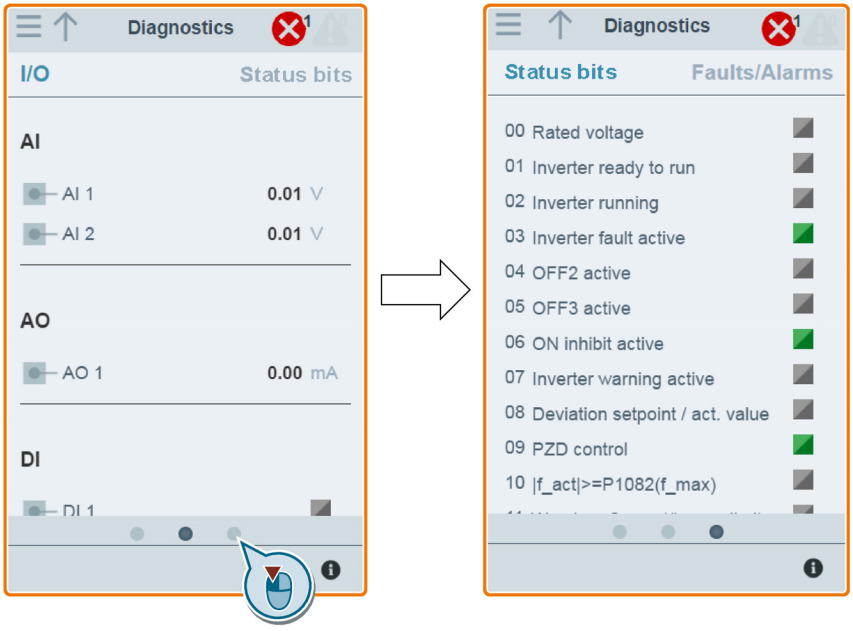

Relevant parameters

Parameter	Function
r0052.0...15	CO/BO: Active status word 1
r0053.0...11	CO/BO: Active status word 2

6.12 Backing up and restoring

You can open the backup & restore Web page by selecting the backup & restore icon from either the home page or the navigation sidebar.

6.12.1 Backing up

You can use the backup page to back up the desired parameters to SINAMICS V20 Smart Access and download it (*.xml file) to your local drive (recommended on PC).

Note

The backup process backs up all parameters of access levels ≤ 4 and allows you to back up a maximum of 20 files to SINAMICS V20 Smart Access. In case of any further backup attempt, a message appears prompting you to delete some of the existing backup files.

1. Open the backup & restore Web page by selecting the backup & restore icon from either the home page or the navigation sidebar.
2. Proceed as follows to back up the selected parameter file to SINAMICS V20 Smart Access.

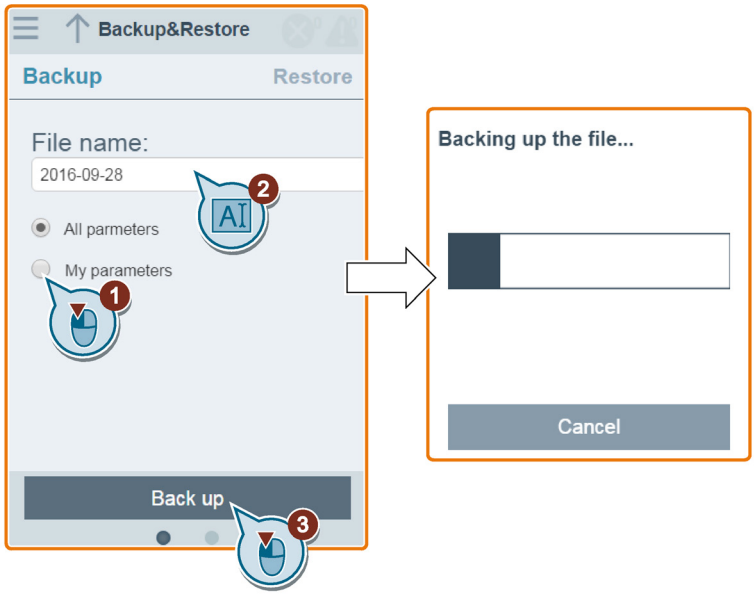

Character restrictions for the file name: maximum 30 characters which are limited to A-Z, a-z, 0-9, _, -, (,), dot, or space. If an existing backup file has the same name as the new file you desire to back up, a message prompts asking you if you want to overwrite the existing file.

Note:

When you perform the backup operation on a mobile device, if the menus and buttons on the Web page disappear after you finish editing the backup file name, then you can click in the blank area of the Web page to restore them.

3. When the following window appears, proceed as follows to complete the backup process. If the Web page indicates that the backup fails, you can select to back up again.

   Note that download to your local drive (recommended on PC) is only an optional step. If you attempt to download from the V20 Web page via the supported Internet Explorer Web browser, the V20 Web page then opens the file. You must save the backed-up file to your local drive manually.



6.12.2 Restoring

You can use the restore page to upload, download, delete, and/or restore the selected file (*.xml file).

Note

The restore process restores all parameters of access levels ≤ 4.

Uploading an existing file (recommended on PC)

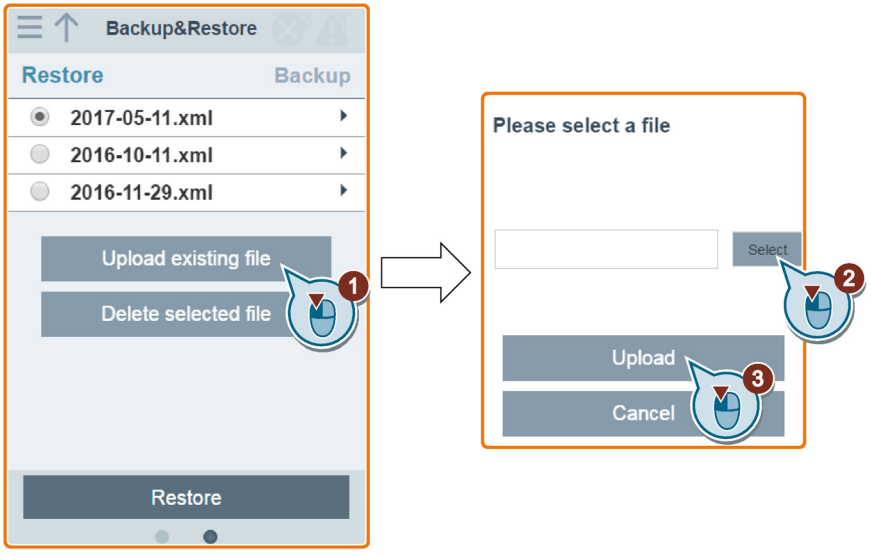

Downloading an existing file (recommended on PC)

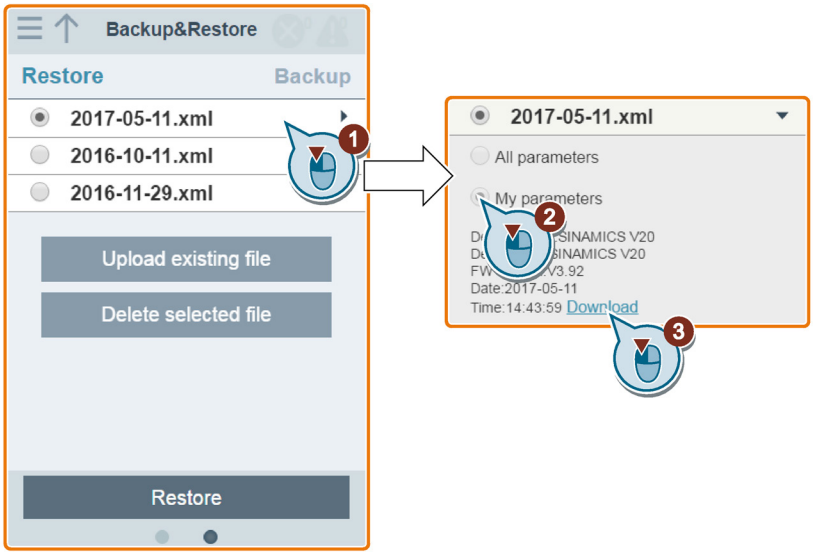

If you attempt to download from the V20 Web page via the supported Internet Explorer Web browser, the V20 Web page then opens the file. You must save the backed-up file to your local drive manually.

Deleting a selected file

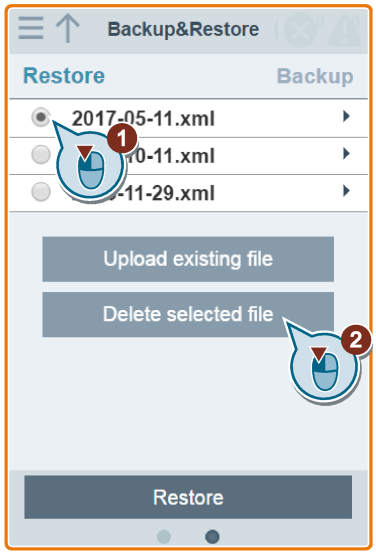

Restoring the selected file

1. Proceed as follows to start restoring.

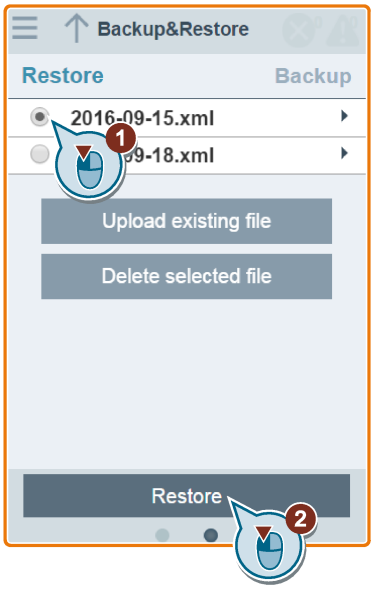

2. The restore process completes when the following window appears. If the Web page indicates that the restoring fails, you can select to try restoring again.

   Then you can choose to save the parameter settings to the non-volatile memory in the following window:

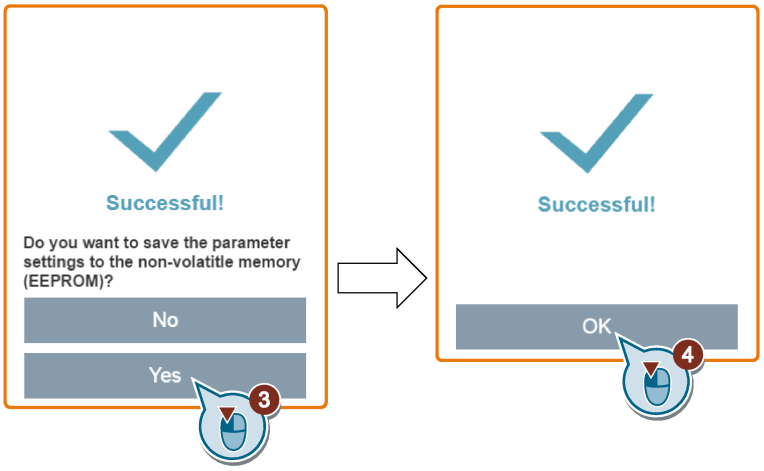

6.13 Upgrading Web application and SINAMICS V20 Smart Access firmware versions

Upgrading on the V20 Web page always upgrades both the V20 Web application version and the SINAMICS V20 Smart Access firmware version at the same time. In addition to the Web application version upgrade and the firmware version upgrade, you can also upgrade the service package version to enhance the network security level of SINAMICS V20 Smart Access.

Note

Before upgrading the service package version, make sure that the Smart Access firmware version is V01.02.05 or later.

There are two upgrading methods for selection:

- Conventional upgrading
- Basic upgrading (applicable when conventional upgrading cannot be performed)

Conventional upgrading

1. Download the target upgrade file (*.bin file) from the following Web site to your local drive (recommended on PC):
   https://support.industry.siemens.com/cs/ww/en/ps/13208
2. Access the V20 Web page: http://192.168.1.1. Proceed as follows to perform the upgrade. Note that you must select the upgrade file downloaded to your local drive.

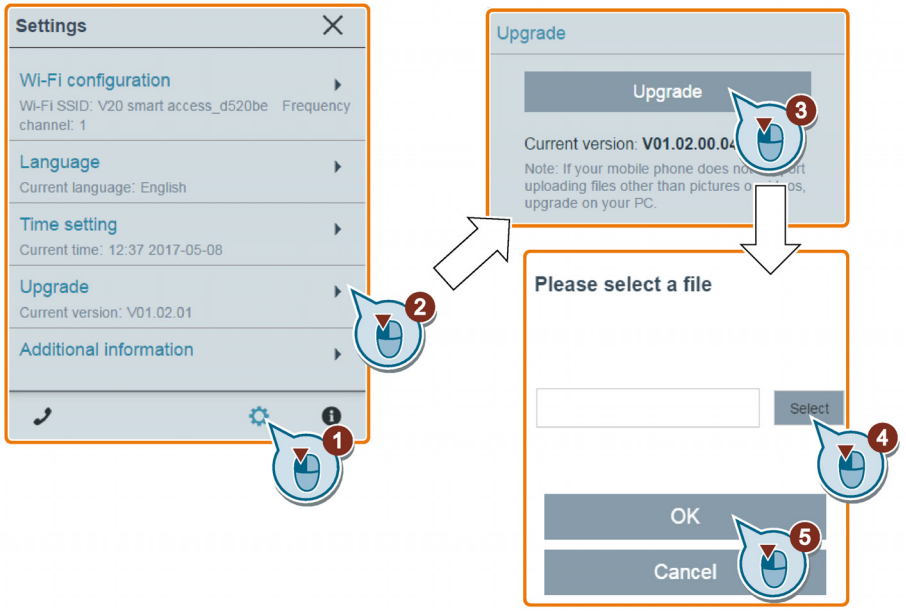

3. Confirm completion of the upgrading process when the following window appears. If the Web page indicates that the upgrading fails, you can select to try upgrading again.

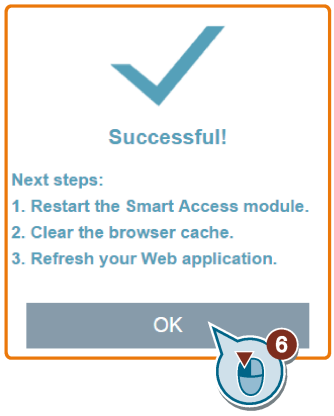

4. Restart SINAMICS V20 Smart Access.
5. Clear the Web browser cache.
6. Refresh your Web application.

Basic upgrading

1. Download the target upgrade file (*.bin file) from the following Web site to your local drive (recommended on PC):

   https://support.industry.siemens.com/cs/ww/en/ps/13208
2. Power off SINAMICS V20 Smart Access by sliding its power switch to "OFF". Keep the reset button pressed and then slide the power switch to "ON".
3. Open the following Web site specific for basic upgrading:

   http://192.168.1.1/factory/basicupgrade.html
4. Proceed as follows:

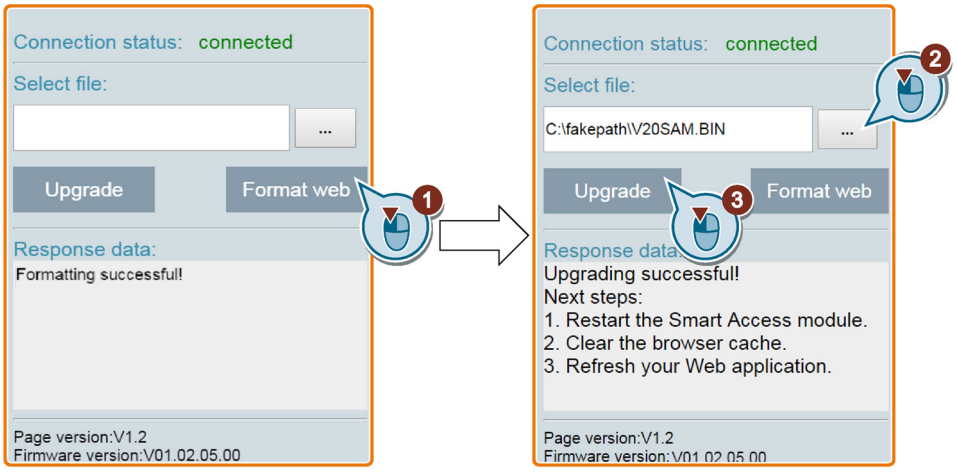

5. Restart SINAMICS V20 Smart Access.
6. Clear the Web browser cache.
7. Refresh your Web application.

Note

Refresh the basic upgrading page if the connection status unexpectedly becomes "disconnected" during upgrading.

6.14 Viewing the support information

Proceed as follows to view the support information in case of any service need:



Editing the support information

You can also edit the telephone number and E-mail address of the service support by proceeding as follows:

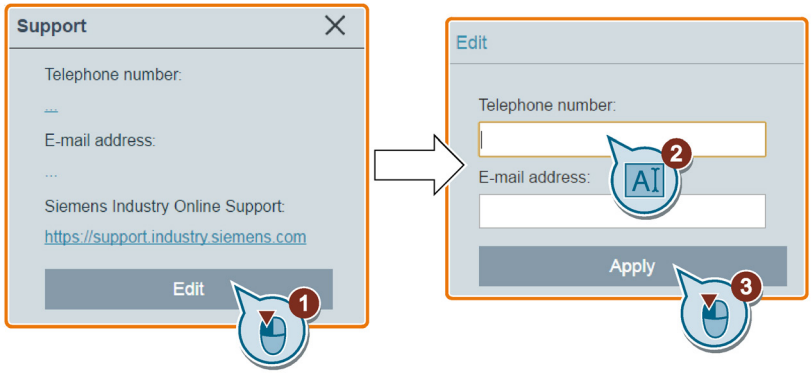

Make sure you observe the following rules when entering the telephone number and E-mail address to pass the validity check:

- For telephone number: up to 22 characters starting with "+" and limited to numbers, space, and "-";
- For E-mail address: up to 48 characters starting with numbers or letters.

Communicating with the PLC

7

The SINAMICS V20 supports communication with Siemens PLCs over USS on RS485. You can parameterize whether the RS485 interface shall apply USS or MODBUS RTU protocol. USS is the default bus setting. A screened twisted pair cable is recommended for the RS485 communication.

Make sure that you terminate the bus correctly by fitting a 120 R bus termination resistor between the bus terminals (P+, N-) of the device at one end of the bus and a termination network between the bus terminals of the device at the other end of the bus. The termination network should be a 1.5 k resistor from 10 V to P+, 120 R from P+ to N- and 470 R from N- to 0 V. A suitable termination network is available from your Siemens dealer.

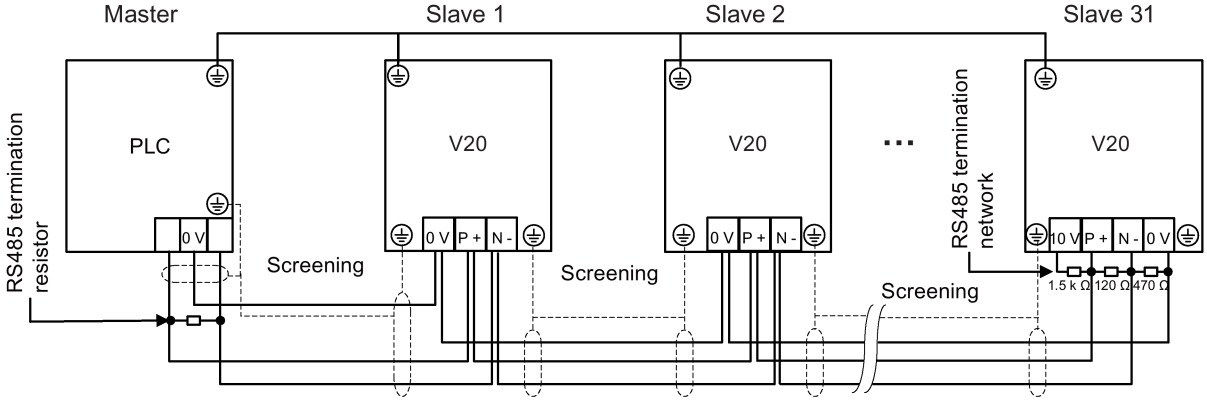

7.1 USS communication

Overview

One PLC (master) can connect a maximum of 31 inverters (slaves) through the serial link and control them with the USS serial bus protocol. A slave can never transmit without first being initiated by the master so that direct information transfer between individual slaves is not possible.

Data exchanging:

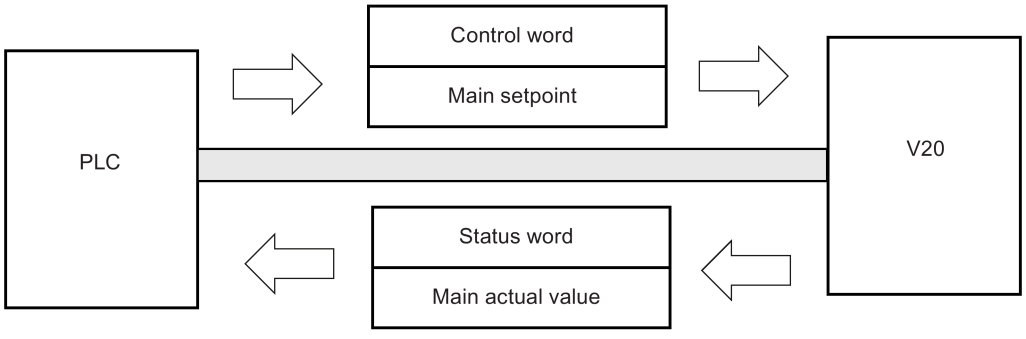

The messages are always sent in the following format (half-duplex communication):

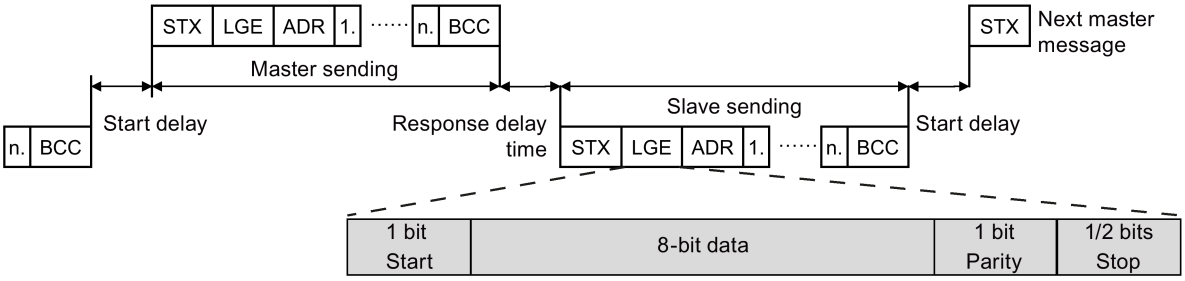

- Response delay time: 20 ms
- Start delay time: depends on baud rate (minimum operation time for 2-character string: 0.12 to 2.3 ms)
- Message transfer sequence:
  - master polls slave 1, then slave 1 responds
  - master polls slave 2, then slave 2 responds
- Fixed framing characters that cannot be altered:
  - 8 data bits
  - 1 parity bit
  - 1 or 2 stop bits

Abbreviation	Significance	Length	Explanation
STX	Start of text	ASCII characters	02 hex
LGE	Telegram length	1 byte	Contains the telegram length
ADR	Address	1 byte	Contains the slave address and the telegram type (binary coded)
1. ..... n.	Net characters	Each 1 byte	Net data, contents are dependent on the request
BCC	Block check character	1 byte	Data security characters

Request and response IDs

Request and response IDs are written in bits 12 to 15 of the PKW (parameter ID value) part of USS telegram.

Request IDs (master → slave)

Request ID	Description	Response ID	
		positive	negative
0	No request	0	7/8
1	Request parameter value	1/2	7/8
2	Modify parameter value (word)	1	7/8
3	Modify parameter value (double word)	2	7/8

Request ID	Description	Response ID	
		positive	negative
4	Request descriptive element	3	7/8
6	Request parameter value (array)	4/5	7/8
7	Modify parameter value (array, word)	4	7/8
8	Modify parameter value (array, double word)	5	7/8
9	Request number of array elements	6	7/8
11	Modify parameter value (array, double word) and store in EEPROM	5	7/8
12	Modify parameter value (array, word) and store in EEPROM	4	7/8
13	Modify parameter value (double word) and store in EEPROM	2	7/8
14	Modify parameter value (word) and store in EEPROM	1	7/8

Response IDs (slave → master)

Response ID	Description
0	No response
1	Transfer parameter value (word)
2	Transfer parameter value (double word)
3	Transfer descriptive element
4	Transfer parameter value (array, word)
5	Transfer parameter value (array, double word)
6	Transfer number of array elements
7	Request cannot be processed, task cannot be executed (with error number)
8	No master controller status/no parameter change rights for PKW interface

Error numbers in response ID 7 (request cannot be processed)

No.	Description
0	Illegal PNU (illegal parameter number; parameter number not available)
1	Parameter value cannot be changed (parameter is read-only)
2	Lower or upper limit violated (limit exceeded)
3	Wrong sub-index
4	No array
5	Wrong parameter type/incorrect data type
6	Setting is not allowed (parameter value can only be reset to zero)
7	The descriptive element is not changeable and can only be read
9	Descriptive data not available
10	Access group incorrect
11	No parameter change rights. See parameter P0927. Must have status as master control.
12	Incorrect password
17	The current inverter operating status does not permit the request processing
18	Other error
20	Illegal value. Change request for a value which is within the limits, but it is not allowed for other reasons (parameter with defined single values)

No.	Description
101	Parameter is currently deactivated; parameter has no function in the present inverter status
102	Communication channel width is insufficient for response; dependent on the number of PKW and the maximum net data length of the inverter
104	Illegal parameter value
105	Parameter is indexed
106	Request is not included/task is not supported
109	PKW request access timeout/number of retries is exceeded/wait for response from CPU side
110	Parameter value cannot be changed (parameter is locked)
200/201	Changed lower/upper limits exceeded
202/203	No display on the BOP
204	The available access authorization does not cover parameter changes
300	Array elements differ

Basic inverter settings

Parameter	Function	Setting
P0010	Commissioning parameter	= 30: restores to factory settings
P0970	Factory reset	Possible settings: = 1: resets all parameters (not user defaults) to their default values = 21: resets all parameters and all user defaults to factory reset state **Note:** Parameters P2010, P2011, P2023 retain their values after a factory reset.
P0003	User access level	= 3
P0700	Selection of command source	= 5: USS/MODBUS on RS485 Factory default: 1 (operator panel)
P1000	Selection of frequency set-point	= 5: USS/MODBUS on RS485 Factory default: 1 (MOP setpoint)
P2023	RS485 protocol selection	= 1: USS (factory default) **Note:** After changing P2023, powercycle the inverter. During the powercycle, wait until LED has gone off or the display has gone blank (may take a few seconds) before re-applying power. If P2023 has been changed via a PLC, make sure the change has been saved to EEPROM via P0971.
P2010[0]	USS/MODBUS baudrate	Possible settings: = 6: 9600 bps (factory default) = 7: 19200 bps = 8: 38400 bps ... = 12: 115200 bps
P2011[0]	USS address	Sets the unique address for the inverter. Range: 0 to 31 (factory default: 0)

Parameter	Function	Setting
P2012[0]	USS PZD (process data) length	Defines the number of 16-bit words in PZD part of USS telegram. Range: 0 to 8 (factory default: 2)
P2013[0]	USS PKW (parameter ID value) length	Defines the number of 16-bit words in PKW part of USS telegram. Possible settings: = 0, 3, 4: 0, 3 or 4 words = 127: variable length (factory default)
P2014[0]	USS/MODBUS telegram off time [ms]	If time set to 0, no fault is generated (i.e. watchdog disabled).
r2024[0] ... r2031[0]	USS/MODBUS error statistics	The state of the telegram information on RS485 is reported regardless of the protocol set in P2023.
r2018[0...7]	CO: PZD from USS/MODBUS on RS485	Displays process data received via USS/MODBUS on RS485.
P2019[0...7]	CI: PZD to USS/MODBUS on RS485	Displays process data transmitted via USS/MODBUS on RS485.
P2034	MODBUS parity on RS485	Sets the parity of MODBUS telegrams on RS485. Possible settings: = 0: no parity = 1: odd parity = 2: even parity
P2035	MODBUS stop bits on RS485	Sets the number of stop bits in MODBUS telegrams on RS485. Possible settings: = 1: 1 stop bit = 2: 2 stop bits

7.2 MODBUS communication

Overview

In MODBUS, only the master can start a communication and the slave will answer it. There are two ways of sending a message to a slave. One is unicast mode (address 1 to 247), where the master addresses the slave directly; the other is broadcast mode (address 0), where the master addresses all slaves.

When a slave has received a message, which was addressed at it, the Function Code tells it what to do. For the task defined by the Function Code, the slave may receive some data. And for error checking a CRC code is also included.

After receiving and processing a unicast message, the MODBUS slave will send a reply, but only if no error was detected in the received message. If a processing error occurs, the slave will reply with an error message. The following fixed framing characters in a message cannot be altered: 8 data bits, 1 parity bit, and 1 or 2 stop bits.

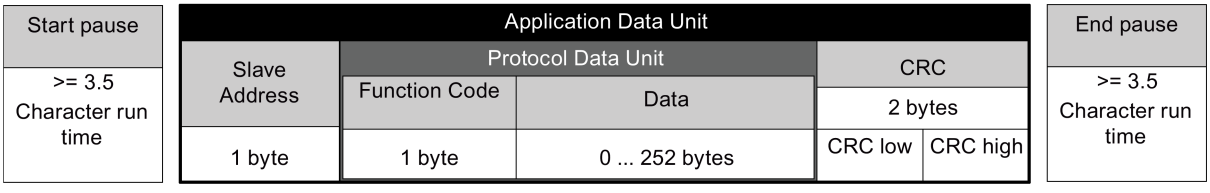

Supported Function Codes

The SINAMICS V20 supports only three Function Codes. If a request with an unknown Function Code is received, an error message will be returned.

FC3 - Read Holding Registers

When a message with FC = 0x03 is received, then 4 bytes of data are expected, that is, FC3 has 4 bytes of data:

- 2 bytes for the starting address of register
- 2 bytes for the number of registers

Byte 1	Byte 2	Byte 3	Byte 4	Byte 5	Byte 6	Byte 7	Byte 8
Address	FC (0x03)	Start address		Number of registers		CRC	
		High	Low	High	Low	High	Low

Inverter response

Byte 1	Byte 2	Byte 3	Byte 4	Byte 5	...	Byte N*2 - 1	Byte N*2	Byte N*2 + 1	Byte N*2 + 2
Address	FC (0x03)	Number of bytes	Register 1 value		...	Register N value		CRC	
			High	Low		High	Low	High	Low

FC6 - Write Single Register

When a message with FC = 0x06 is received, then 4 bytes of data are expected, that is, FC6 has 4 bytes of data:

- 2 bytes for the starting address of register
- 2 bytes for the register value

Byte 1	Byte 2	Byte 3	Byte 4	Byte 5	Byte 6	Byte 7	Byte 8
Address	FC (0x06)	Start address		New register value		CRC	
		High	Low	High	Low	High	Low

Inverter response

Byte 1	Byte 2	Byte 3	Byte 4	Byte 5	Byte 6	Byte 7	Byte 8
Address	FC (0x06)	Start address		New register value		CRC	
		High	Low	High	Low	High	Low

FC16 - Write Multiple Registers

When a message with FC = 0x10 is received, then 5 + N bytes of data are expected, that is, FC16 has 5 + N bytes of data:

- 2 bytes for the starting address of register
- 2 bytes for the number of registers
- 1 byte for the byte count
- N bytes for the register values

Byte 1	Byte 2	Byte 3	Byte 4	Byte 5	Byte 6	Byte 7	...	Byte N - 1	Byte N	Byte N + 1	Byte N + 2
Address	FC (0x10)	Start address		Number of registers		Number of bytes	...	Register N value		CRC	
		High	Low	High	Low			High	Low	High	Low

Inverter response

Byte 1	Byte 2	Byte 3	Byte 4	Byte 5	Byte 6	Byte 7	Byte 8
Address	FC (0x10)	Start address		Number of registers		CRC	
		High	Low	High	Low	High	Low

Exception Responses

If an error is detected through the MODBUS processing, the slave will respond with the FC of the request, but with most significant bit of the FC high and with the Exception Code in the data field. However, any error detected on the global address 0 does not result in a response since all slaves cannot respond at once.

If an error is detected within the received message (for example, parity error, incorrect CRC and so on), then NO response is sent to the master.

Note that if a request with FC16 is received which contains a write that the inverter cannot perform (including write to a zero entry), other valid writes will still be performed even though an exception response is returned.

The following MODBUS Exception Codes are supported by SINAMICS V20:

Exception Code	MODBUS name	Meaning
01	Illegal function code	The function code is not supported – only FC3, FC6 and FC16 are supported.
02	Illegal data address	An invalid address was queried.
03	Illegal data value	An invalid data value was recognized.
04	Slave device failure	An unrecoverable error occurred while the device was processing the action.

The table below shows the cases in which an Exception Code is returned:

Error description	Exception Code
Unknown Function Code	01
Read registers, which are out of boundary	02
Write register, which is out of boundary	02
Read request of too many registers (>125)	03
Write request of too many registers (>123)	03
Incorrect message length	03
Write to a read-only register	04
Write register, error in parameter access	04
Read register, error in Parameter Manager	04
Write to a zero entry	04
Unknown error	04

Basic inverter settings

Parameter	Function	Setting
P0010	Commissioning parameter	= 30: restores to factory settings
P0970	Factory reset	Possible settings: = 1: resets all parameters (not user defaults) to their default values = 21: resets all parameters and all user defaults to factory reset state **Note:** Parameters P2010, P2021, P2023 retain their values after a factory reset.
P0003	User access level	= 3
P0700	Selection of command source	= 5: USS/MODBUS on RS485 Factory default: 1 (operator panel)
P2010[0]	USS/MODBUS baudrate	Possible settings: = 6: 9600 bps (factory default) = 7: 19200 bps = 8: 38400 bps ... =12: 115200 bps
P2014[0]	USS/MODBUS telegram off time [ms]	If time set to 0, no fault is generated (i.e. watchdog disabled).
P2021	Modbus address	Sets the unique address for the inverter. Range: 1 to 247 (factory default: 1)
P2022	Modbus reply timeout [ms]	Range: 0 to 10000 (factory default: 1000)

Parameter	Function	Setting
P2023	RS485 protocol selection	= 2: Modbus Factory default: 1 (USS) **Note:** After changing P2023, powercycle the inverter. During the powercycle, wait until LED has gone off or the display has gone blank (may take a few seconds) before re-applying power. If P2023 has been changed via a PLC, make sure the change has been saved to EEPROM via P0971.
r2024[0] ... r2031[0]	USS/MODBUS error statistics	The state of the telegram information on RS485 is reported regardless of the protocol set in P2023.
r2018[0...7]	CO: PZD from USS/ MODBUS on RS485	Displays process data received via USS/MODBUS on RS485.
P2019[0...7]	CI: PZD to USS/MODBUS on RS485	Displays process data transmitted via USS/MODBUS on RS485.
P2034	MODBUS parity on RS485	Sets the parity of MODBUS telegrams on RS485. Possible settings: = 0: no parity = 1: odd parity = 2: even parity
P2035	MODBUS stop bits on RS485	Sets the number of stop bits in MODBUS telegrams on RS485. Possible settings: = 1: 1 stop bit = 2: 2 stop bits

Mapping table

The table below shows registers that the SINAMICS V20 inverter supports. "R", "W", and "R/W" in the "Access" column stand for read, write, and read/write respectively. Registers with * are available only when the optional I/O Extension Module is connected.

HSW (speed setpoint), HIW (actual speed), STW (control word), and ZSW (status word) refer to control data. For more information, see parameters r2018 and P2019 in Chapter "Parameter list (Page 183)".

Register No.		Description	Access	Unit	Scaling factor	Range or On/Off text	Read	Write
Inverter	MODBUS							
0	40001	Watchdog time	R/W	ms	1	0 - 65535	-	-
1	40002	Watchdog action	R/W	-	1	-	-	-
2	40003	Frequency setpoint	R/W	%	100	0.00 - 100.00	HSW	HSW
3	40004	Run enable	R/W	-	1	0 - 1	STW:3	STW:3
4	40005	Forward/reverse command	R/W	-	1	0 - 1	STW:11	STW:11
5	40006	Start command	R/W	-	1	0 - 1	STW:0	STW:0
6	40007	Fault acknowledgement	R/W	-	1	0 - 1	STW:7	STW:7
7	40008	PID setpoint reference	R/W	%	100	-200.0 - 200.0	P2240	P2240
8	40009	PID enable	R/W	-	1	0 - 1	r0055.8	(BICO) P2200

Register No.		Description	Ac-cess	Unit	Scaling factor	Range or On/Off text		Read	Write
Inverter	MODBUS								
9	40010	Current limit	R/W	%	10	10.0 - 400.0		P0640	P0640
10	40011	Acceleration time	R/W	s	100	0.00 - 650.0		P1120	P1120
11	40012	Deceleration time	R/W	s	100	0.00 - 650.0		P1121	P1121
12	40013	(Reserved)							
13	40014	Digital output 1	R/W	-	1	HIGH	LOW	r0747.0	(BICO) P0731
14	40015	Digital output 2	R/W	-	1	HIGH	LOW	r0747.1	(BICO) P0732
15	40016	Reference frequency	R/W	Hz	100	1.00 - 550.00		P2000	P2000
16	40017	PID upper limit	R/W	%	100	-200.0 - 200.0		P2291	P2291
17	40018	PID lower limit	R/W	%	100	-200.0 - 200.0		P2292	P2292
18	40019	Proportional gain	R/W	-	1000	0.000 - 65.000		P2280	P2280
19	40020	Integral gain	R/W	s	1	0 - 60		P2285	P2285
20	40021	Differential gain	R/W	-	1	0 - 60		P2274	P2274
21	40022	Feedback gain	R/W	%	100	0.00 - 500.00		P2269	P2269
22	40023	Low pass	R/W	-	100	0.00 - 60.00		P2265	P2265
23	40024	Frequency output	R	Hz	100	-327.68 - 327.67		r0024	r0024
24	40025	Speed	R	RPM	1	-16250 - 16250		r0022	r0022
25	40026	Current filtered	R	A	100	0 - 163.83		r0027	r0027
26	40027	Torque	R	Nm	100	-325.00 - 325.00		r0031	r0031
27	40028	Actual power	R	kW	100	0 - 327.67		r0032	r0032
28	40029	Total kWh	R	kWh	1	0 - 32767		r0039	r0039
29	40030	DC bus voltage	R	V	1	0 - 32767		r0026	r0026
30	40031	Reference	R	Hz	100	-327.68 - 327.67		r0020	r0020
31	40032	Rated power	R	kW	100	0 - 327.67		r0206	r0206
32	40033	Voltage output	R	V	1	0 - 32767		r0025	r0025
33	40034	Forward/reverse	R	-	1	FWD	REV	ZSW:14	ZSW:14
34	40035	Stop/run	R	-	1	STOP	RUN	ZSW:2	ZSW:2
35	40036	Run at maximum frequency	R	-	1	MAX	NO	ZSW:10	ZSW:10
36	40037	Control mode	R	-	1	SERIAL	LOCAL	ZSW:9	ZSW:9
37	40038	Enabled	R	-	1	ON	OFF	ZSW:0	ZSW:0
38	40039	Ready to run	R	-	1	READY	OFF	ZSW:1	ZSW:1
39	40040	Analog input 1	R	%	100	-300.0 - 300.0		r0754[0]	r0754[0]
40	40041	Analog input 2	R	%	100	-300.0 - 300.0		r0754[1]	r0754[1]
41	40042	Analog output 1	R	%	100	-100.0 - 100.0		r0774[0]	r0774[0]
43	40044	Actual frequency	R	%	100	-100.0 - 100.0		HIW	HIW
44	40045	PID setpoint output	R	%	100	-100.0 - 100.0		r2250	r2250
45	40046	PID output	R	%	100	-100.0 - 100.0		r2294	r2294
46	40047	PID feedback	R	%	100	-100.0 - 100.0		r2266	r2266
47	40048	Digital input 1	R	-	1	HIGH	LOW	r0722.0	r0722.0
48	40049	Digital input 2	R	-	1	HIGH	LOW	r0722.1	r0722.1
49	40050	Digital input 3	R	-	1	HIGH	LOW	r0722.2	r0722.2

Register No.		Description	Ac-cess	Unit	Scaling factor	Range or On/Off text		Read	Write
Inverter	MODBUS								
50	40051	Digital input 4	R	-	1	HIGH	LOW	r0722.3	r0722.3
53	40054	Fault	R	-	1	FAULT	OFF	ZSW:3	ZSW:3
54	40055	Last fault	R	-	1	0 - 32767		r0947[0]	r0947[0]
55	40056	Fault 1	R	-	1	0 - 32767		r0947[1]	r0947[1]
56	40057	Fault 2	R	-	1	0 - 32767		r0947[2]	r0947[2]
57	40058	Fault 3	R	-	1	0 - 32767		r0947[3]	r0947[3]
58	40059	Warning	R	-	1	WARN	OK	ZSW:7	ZSW:7
59	40060	Last warning	R	-	1	0 - 32767		r2110	r2110
60	40061	Inverter version	R	-	100	0.00 - 327.67		r0018	r0018
61	40062	Inverter model	R	-	1	0 - 32767		r0201	r0201
99	40100	STW	R/W	-	1			PZD 1	PZD 1
100	40101	HSW	R/W	-	1			PZD 2	PZD 2
109	40110	ZSW	R	-	1			PZD 1	PZD 1
110	40111	HIW	R	-	1			PZD 2	PZD 2
199	40200	Digital output 1	R/W	-	1	HIGH	LOW	r0747.0	(BICO) P0731
200	40201	Digital output 2	R/W	-	1	HIGH	LOW	r0747.1	(BICO) P0732
201	40202	Digital output 3*	R/W	-	1	HIGH	LOW	r0747.2	(BICO) P0733
202	40203	Digital output 4*	R/W	-	1	HIGH	LOW	r0747.3	(BICO) P0734
219	40220	Analog output 1	R	%	100	-100.0 - 100.0		r0774[0]	r0774[0]
239	40240	Digital input 1	R	-	1	HIGH	LOW	r0722.0	r0722.0
240	40241	Digital input 2	R	-	1	HIGH	LOW	r0722.1	r0722.1
241	40242	Digital input 3	R	-	1	HIGH	LOW	r0722.2	r0722.2
242	40243	Digital input 4	R	-	1	HIGH	LOW	r0722.3	r0722.3
243	40244	Digital input 5*	R	-	1	HIGH	LOW	r0722.4	r0722.4
244	40245	Digital input 6*	R	-	1	HIGH	LOW	r0722.5	r0722.5
259	40260	Analog input 1	R	%	100	-300.0 - 300.0		r0754[0]	r0754[0]
260	40261	Analog input 2	R	%	100	-300.0 - 300.0		r0754[1]	r0754[1]
299	40300	Inverter model	R	-	1	0 - 32767		r0201	r0201
300	40301	Inverter version	R	-	100	0.00 - 327.67		r0018	r0018
319	40320	Rated power	R	kW	100	0 - 327.67		r0206	r0206
320	40321	Current limit	R/W	%	10	10.0 - 400.0		P0640	P0640
321	40322	Acceleration time	R/W	s	100	0.00 - 650.0		P1120	P1120
322	40323	Deceleration time	R/W	s	100	0.00 - 650.0		P1121	P1121
323	40324	Reference frequency	R/W	Hz	100	1.00 - 650.0		P2000	P2000
324	40325	Fixed frequency 1	R/W	Hz	100	-327.68 - 327.67		P1001	P1001
325	40326	Fixed frequency 2	R/W	Hz	100	-327.68 - 327.67		P1002	P1002
326	40327	Fixed frequency 3	R/W	Hz	100	-327.68 - 327.67		P1003	P1003
327	40328	Fixed frequency 4	R/W	Hz	100	-327.68 - 327.67		P1004	P1004
329	40330	Fixed setpoint 1	R/W	%	100	-200 - 200		P2889	P2889
330	40331	Fixed setpoint 2	R/W	%	100	-200 - 200		P2890	P2890
339	40340	Reference	R	Hz	100	-327.68 - 327.67		r0020	r0020

Register No.		Description	Ac-cess	Unit	Scaling factor	Range or On/Off text	Read	Write
Inverter	MODBUS							
340	40341	Speed	R	RPM	1	-16250 - 16250	r0022	r0022
341	40342	Frequency output	R	Hz	100	-327.68 - 327.67	r0024	r0024
342	40343	Voltage output	R	V	1	0 - 32767	r0025	r0025
343	40344	DC bus voltage	R	V	1	0 - 32767	r0026	r0026
344	40345	Current filtered	R	A	100	0 - 163.83	r0027	r0027
345	40346	Torque	R	Nm	100	-325.00 - 325.00	r0031	r0031
346	40347	Actual power	R	kW	100	0 - 327.67	r0032	r0032
347	40348	Total kWh	R	kWh	1	0 - 32767	r0039	r0039
348	40349	Hand/auto	R	-	1	HAND AUTO	r0807	r0807
349	40350	Current unfiltered	R	A	100	0 - 163.83	r0068	r0068
399	40400	Fault 1	R	-	1	0 - 32767	r0947[0]	r0947[0]
400	40401	Fault 2	R	-	1	0 - 32767	r0947[1]	r0947[1]
401	40402	Fault 3	R	-	1	0 - 32767	r0947[2]	r0947[2]
402	40403	Fault 4	R	-	1	0 - 32767	r0947[3]	r0947[3]
403	40404	Fault 5	R	-	1	0 - 32767	r0947[4]	r0947[4]
404	40405	Fault 6	R	-	1	0 - 32767	r0947[5]	r0947[5]
405	40406	Fault 7	R	-	1	0 - 32767	r0947[6]	r0947[6]
406	40407	Fault 8	R	-	1	0 - 32767	r0947[7]	r0947[7]
407	40408	Warning	R	-	1	0 - 32767	r2110[0]	r2110[0]
498	40499	Parameter error code	R	-	1	0 - 254	-	-
499	40500	PID enable	R/W	-	1	0 - 1	r0055.8	(BICO) P2200
500	40501	PID setpoint refer-ence	R/W	%	100	-200.0 - 200.0	P2240	P2240
509	40510	Low pass	R/W	-	100	0.00 - 60.0	P2265	P2265
510	40511	Feedback gain	R/W	%	100	0.00 - 500.00	P2269	P2269
511	40512	Proportional gain	R/W	-	1000	0.000 - 65.000	P2280	P2280
512	40513	Integral gain	R/W	s	1	0 - 60	P2285	P2285
513	40514	Differential gain	R/W	-	1	0 - 60	P2274	P2274
514	40515	PID upper limit	R/W	%	100	-200.0 - 200.0	P2291	P2291
515	40516	PID lower limit	R/W	%	100	-200.0 - 200.0	P2292	P2292
519	40520	PID setpoint output	R	%	100	-100.0 - 100.0	r2250	r2250
520	40521	PID feedback	R	%	100	-100.0 - 100.0	r2266	r2266
521	40522	PID output	R	%	100	-100.0 - 100.0	r2294	r2294
549	40550	Parameter number	RW	-	1	0 - 65535	-	-
550	40551	Parameter index	RW	-	1	0 - 65535	-	-
551	40552	Reserved	RO	-	-	-	-	-
553	40554	Parameter upper word	RW	-	1	0 - 65535	-	-
554	40555	Parameter lower word	RW	-	1	0 - 65535	-	-
557	40558	Parameter upper word	RO	-	1	0 - 65535	-	-
558	40559	Parameter lower word	RO	-	1	0 - 65535	-	-

Program example

The program below gives an example of calculating the CRC for MODBUS RTU.

```
unsigned int crc_16 (unsigned char *buffer, unsigned int length)
{
 unsigned int i, j, temp_bit, temp_int, crc;
 crc = 0xFFFF;
 for ( i = 0; i < length; i++ )
  {
   temp_int = (unsigned char) *buffer++;
   crc ^= temp_int;
   for ( j = 0; j < 8; j++ )
    {
     temp_bit = crc & 0x0001;
     crc >>= 1;
     if ( temp_bit != 0 )
     crc ^= 0xA001;
    }
  }
}
```

Parameter scaling

Due to the limits of the integer data in the MODBUS protocol, it is necessary to convert the inverter parameters before transmitting them. This is done by scaling, so that a parameter, which has a position after decimal point, is multiplied by a factor, to get rid of the fractional part. The scaling factor is as defined in the above table.

BICO parameters

The updating of BICO parameters will also be done in the parameter processing in the background. Because of the limitations of the register value, it is only possible to write a ‘0’ or a ‘1’ to a BICO parameter. This will set BICO input to a static value of either ‘0’ or ‘1’. The previous connection to another parameter is lost. Reading the BICO parameter will return the current value of the BICO output.

For example: MODBUS register number 40200. Writing a value 0 or 1 to that register will set the BICO input P0731 statically to that value. Reading will return the BICO output, which is stored in r0747.0.

Fault

The inverter displays the fault F72 when the following three conditions are met:

- The parameter P2014 (USS/MODBUS telegram off time) is not equal to 0.
- Process data has been received from the master since the inverter's start-up.
- The time between receipts of two consecutive process data telegrams exceeds the value of P2014.

Parameter list

8

8.1 Introduction to parameters

Parameter number

Numbers prefixed with an "r" indicate that the parameter is a "read-only" parameter.

Numbers prefixed with a "P" indicate that the parameter is a "writable" parameter.

[index] indicates that the parameter is an indexed parameter and specifies the range of indices available. If the index is [0...2] and the meaning is not listed, then see "Data set".

.0...15 indicates that the parameter has several bits, which can be evaluated or connected individually.

Data set

Note

The "Index" chapter at the end of this manual provides complete lists of CDS/DDS parameters.

In the inverter, the parameters which are used to define the sources for commands and setpoints are combined in the **Command Data Set** (CDS), while the parameters for the open and closed-loop control of the motor are combined in the **Inverter Data Set** (DDS).

The inverter can be operated from different signal sources by switching over the command data sets. When switching over the inverter data sets, it is possible to switch between different inverter configurations (control type, motor).

Three independent settings are possible for each data set. These settings can be made using the index [0...2] of the particular parameter.

Index	CDS	DDS
[0]	Command data set 0	Inverter data set 0
[1]	Command data set 1	Inverter data set 1
[2]	Command data set 2	Inverter data set 2

SINAMICS V20 has an integrated copy function which is used to transfer data sets. This can be used to copy CDS/DDS parameters corresponding to the particular application.

Copy CDS	Copy DDS	Remarks
P0809[0]	P0819[0]	The data set which is to be copied (source)
P0809[1]	P0819[1]	The data set into which data is to be copied (target)
P0809[2]	P0819[2]	= 1: Start copying
		= 0: Copying completed

For example, copying of all values from CDS0 to CDS2 can be accomplished by the following procedure:

1. Set P0809[0] = 0: copy from CDS0
2. Set P0809[1] = 2: copy to CDS2
3. Set P0809[2] = 1: start copy

Command data set

The command data sets are changed over using the BICO parameters P0810 and P0811, whereby the active command data set is displayed in parameter r0050. Changeover is possible in both the "Ready" and the "Run" states.

P0810 = 0 P0811 = 0	CDS0
P0810 = 1 P0811 = 0	CDS1
P0810 = 0 or 1 P0811 = 1	CDS2

Inverter data set

The inverter data sets are changed over using the BICO parameters P0820 and P0821, whereby the active inverter data set is displayed in parameter r0051. Inverter data sets can only be changed over in the "Ready" state.

P0820 = 0 P0821 = 0	DDS0
P0820 = 1 P0821 = 0	DDS1
P0820 = 0 or 1 P0821 = 1	DDS2

BI, BO, CI, CO, CO/BO in parameter names

Note

The "Index" chapter at the end of this manual provides groups of the BICO parameters.

Certain parameter names include the following abbreviated prefixes: BI, BO, CI, CO and CO/BO followed by a colon. These abbreviations have the following meanings:

BI	=	P9999 (0)	Binector input: Parameter selects the source of a binary signal Each BI parameter can connect as the input to any BO or CO/BO parameter.
BO	=	r9999	Binector output: Parameter connects as a binary signal Each BO parameter can connect as the output to any BI parameter.
CI	=	r9999 (999:9)	Connector input: Parameter selects the source of an analog signal Each CI parameter can connect as the input to any CO or CO/BO parameter.
CO	=	r9999 [99]	Connector output: Parameter connects as an analog signal Each CO parameter can connect as the output to any CI parameter.
CO/BO	=	r9999 r9999	Connector/binector output: Parameter connects as an analog signal and/or as a binary signal Each CO/BO parameter can connect as the output to any BI or CI parameter.

BICO example

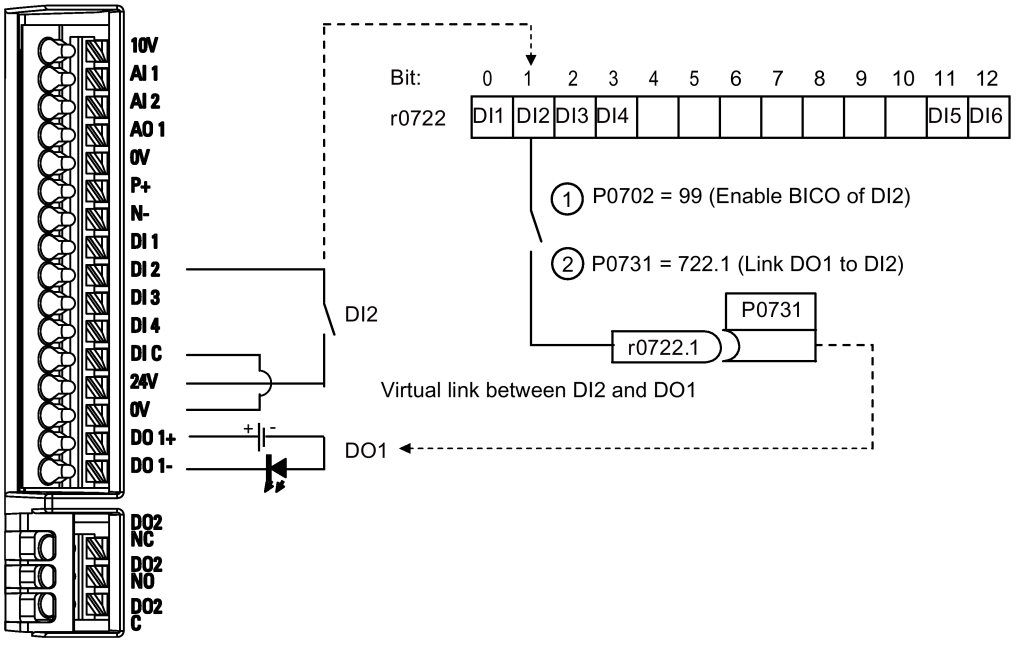

BICO or the binary interconnection technology can help the user to connect internal function and values to realize more customized features.

BICO functionality is a different, more flexible way of setting and combining input and output functions. It can be used in most cases in conjunction with the simple, access level 2 settings.

The BICO system allows complex functions to be programmed. Boolean and mathematical relationships can be set up between inputs (digital, analog, serial etc.) and outputs (inverter current, frequency, analog output, digital outputs, etc.).

The default parameter that a BI or CI parameter is connected to is shown in the Factory default column of the parameter list.

Access level (P0003)

Defines the level of user access to parameter sets.

Access level	Description	Remarks
0	User-defined parameter list	Defines a limited set of parameters to which the end user has access. See P0013 for details on use.
1	Standard	Allows access into most frequently used parameters.
2	Extended	Allows extended access to more parameters.
3	Expert	For expert use only.
4	Service	Only for use by authorized service personnel, password protected.

Data type

The data types available are shown in the table below.

U8	8-bit unsigned
U16	16-bit unsigned
U32	32-bit unsigned
I16	16-bit integer
I32	32-bit integer
Float	32-bit floating point number

Depending on the data type of the BICO input parameter (signal sink) and BICO output parameter (signal source) the following combinations are possible when creating BICO interconnections:

	BICO input parameter			
	CI parameter			BI parameter
BICO output parameter	U32/I16	U32/I32	U32/Float	U32/Bin
CO: U8	√	√	-	-
CO: U16	√	√	-	-
CO: U32	√	√	-	-
CO: I16	√	√	-	-
CO: I32	√	√	-	-
CO: Float	√	√	√	-
BO: U8	-	-	-	√
BO: U16	-	-	-	√
BO: U32	-	-	-	√
BO: I16	-	-	-	√
BO: I32	-	-	-	√
BO: Float	-	-	-	-
Legend: √: BICO interconnection permitted -: BICO interconnection not permitted				

Scaling

Specification of the reference quantity with which the signal value will be converted automatically.

Reference quantities, corresponding to 100 %, are required for the statement of physical units as percentages. These reference quantities are entered in P2000 to P2004.

In addition to P2000 to P2004 the following normalizations are used:

- TEMP: 100 °C = 100 %
- PERCENT: 1.0 = 100 %
- 4000H: 4000 hex = 100 %

Can be changed

Inverter state in which the parameter is changeable. Three states are possible:

- Commissioning: C, C(1) or C(30)
- Run: U
- Ready to run: T

This indicates when the parameter can be changed. One, two or all three states may be specified. If all three states are specified, this means that it is possible to change this parameter setting in all three inverter states. C shows the parameter is changeable whatever P0010 equals; C(1) shows that the parameter is changeable only when P0010 = 1; C(30) shows that the parameter is changeable only when P0010 = 30.

8.2 Parameter list

Parameter	Function	Range	Factory default	Can be changed	Scaling	Data set	Data type	Acc. Level
r0002	**Inverter state**	-	-	-	-	-	U16	2
	Displays actual inverter state.							
	0	Commissioning mode (P0010 ≠ 0)						
	1	Inverter ready						
	2	Inverter fault active						
	3	Inverter starting (visible only while pre-charging DC link)						
	4	Inverter running						
	5	Stopping (ramping down)						
	6	Inverter inhibited						
P0003	**User access level**	0 - 4	1	U, T	-	-	U16	1
	Defines user access level to parameter sets.							
	0	User defined parameter list - see P0013 for details on use						
	1	Standard: Allows access into most frequently used parameters						
	2	Extended: Allows extended access, for example, to inverter I/O functions						
	3	Expert: For expert use only						
	4	Service: Only for use by authorized service, password protected						

Parameter	Function	Range	Factory default	Can be changed	Scaling	Data set	Data type	Acc. Level
P0004	**Parameter filter**	0 - 24	0	U, T	-	-	U16	1
	Filters parameters according to functionality to enable a more focused approach to commissioning.							
	0	All parameters						
	2	Inverter						
	3	Motor						
	5	Technology application/units						
	7	Commands, binary I/O						
	8	Analog input and analog output						
	10	Setpoint channel/RFG						
	12	Inverter features						
	13	Motor control						
	19	Motor identification						
	20	Communication						
	21	Warnings/faults/monitoring						
	22	Technology controller						
	24	List of modified parameters						
P0005	**Parameter display selection**	0 - 9580	0	C, U, T	-	-	U16	2
	Selects default display parameter (inverter display).							
Example:	The inverter displays the value of the parameter selected here by default.							
Notice:	If you have set P0005 to a non-zero value which represents an actual parameter number, then the inverter displays the value of the selected parameter as the default display value; if you have set P0005 to 0 or a non-zero value which does not represent an actual parameter number, then the default display remains unchanged.							
P0007	**Backlight delay time**	0 - 2000	0	U, T	-	-	U16	3
	Defines time period after which the backlight of the operator panel display turns off if no buttons have been pressed.							
	0	Backlight always on						
	1 - 2000	Number of seconds after which the backlight turns off.						
P0010	**Commissioning parameter**	0 - 30	0	T	-	-	U16	1
	Filters parameters so that only those related to a particular functional group are selected.							
	0	Ready						
	1	Quick commissioning						
	2	Inverter						
	29	Download						
	30	Factory setting						
Dependency:	Reset to 0 for inverter to run. P0003 (user access level) also determines access to parameters.							

Parameter	Function	Range	Factory default	Can be changed	Scaling	Data set	Data type	Acc. Level
Note:	• P0010 = 1 The inverter can be commissioned very quickly and easily by setting P0010 = 1. After that only the important parameters (e.g.: P0304, P0305, etc.) are visible. The value of these parameters must be entered one after the other. The end of quick commissioning and the start of internal calculation will be done by setting P3900 = 1 - 3. Afterwards parameter P0010 and P3900 will be reset to zero automatically. • P0010 = 2 For service purposes only. • P0010 = 30 When resetting the parameters or user default values of inverter P0010 must be set to 30. Resetting of the parameters will be started by setting parameter P0970 = 1. The inverter will automatically reset all its parameters to their default settings. This can prove beneficial if you experience problems during parameter setup and wish to start again. Resetting of the user default values will be started by setting parameter P0970 = 21. The inverter will automatically reset all its parameters to the factory default settings. Duration of factory setting will take about 60 seconds.							
P0011	**Lock for user-defined parameter**	0 - 65535	0	U, T	-	-	U16	3
	See P0013							
P0012	**Key for user-defined parameter**	0 - 65535	0	U, T	-	-	U16	3
	See P0013							
P0013[0...19]	**User-defined parameter**	0 - 65535	[0...16] 0 [17] 3 [18] 10 [19] 12	U, T	-	-	U16	3
	Defines a limited set of parameters to which the end user has access. **Instructions for use:** 1. Set P0003 = 3 (expert user). 2. Go to P0013 indices 0 to 16 (user list) 3. Enter into P0013 index 0 to 16 the parameters required to be visible in the user-defined list. The following values are fixed and cannot be changed: - P0013 index 17 = 3 (user access level) - P0013 index 18 = 10 (commissioning parameter filter) - P0013 index 19 = 12 (key for user defined parameter) 4. Set P0003 = 0 to activate the user defined parameter.							
Index:	[0]	1st user parameter						
	[1]	2nd user parameter						
	...	...						
	[19]	20th user parameter						
Dependency:	First, set P0011 ("lock") to a different value then P0012 ("key") to prevent changes to user-defined parameter. Then, set P0003 to 0 to activate the user-defined list. When locked and the user-defined parameter is activated, the only way to exit the user-defined parameter (and view other parameters) is to set P0012 ("key") to the value in P0011 ("lock").							

Parameter	Function	Range	Factory default	Can be changed	Scaling	Data set	Data type	Acc. Level
P0014[0...2]	**Store mode**	0 - 1	0	U, T	-	-	U16	3
	Sets the store mode for parameters. The store mode can be configured for all interfaces under "Index".							
	0	Volatile (RAM)						
	1	Non-volatile (EEPROM)						
Index:	[0]	USS/Modbus on RS485						
	[1]	USS on RS232 (reserved)						
	[2]	Reserved						
Note:	An independent store request may be part of the serial communications (for example, PKE bits 15-12 of USS protocol). See the table below for an influence on the settings of P0014.							
	Value of P0014 [x]	**Store request via USS**				**Result**		
	RAM	EEPROM				EEPROM		
	EEPROM	EEPROM				EEPROM		
	RAM	RAM				RAM		
	EEPROM	RAM				EEPROM		
	1. P0014 itself will always be stored in the EEPROM. 2. P0014 will not be changed by performing a factory reset. When transferring parameter P0014, the inverter uses its processor to carry-out internal calculations. Communications - both via USS as well as Modbus - are interrupted for the time that it takes to make these calculations.							
r0017	**CO/BO: BOP button status**	-	-	-	-	-	U16	3
	Shows the immediate status of the BOP buttons.							
	Bit	**Signal name**			**1 signal**		**0 signal**	
	00	Run button			Yes		No	
	01	Stop button			Yes		No	
	02	HAND/AUTO button combination (OK + M)			Yes		No	
	03	OK button			Yes		No	
	05	Up button			Yes		No	
	06	Down button			Yes		No	
	07	Run/stop latch			Yes		No	
Note:	Bit 07 (ON/OFF), will remain high if the run button has been pressed and released. It will only be reset once the stop button has been pressed.							
r0018	**Firmware version**	-	-	-	-	-	Float	1
	Displays version number of installed firmware.							
r0019.0...14	**CO/BO: Operator panel control word**	-	-	-	-	-	U16	3
	Displays status of operator panel commands. The settings below are used as the "source" codes for key-pad control when connecting to BICO input parameters.							
	Bit	**Signal name**			**1 signal**		**0 signal**	
	00	ON/OFF1			Yes		No	
	01	OFF2: Electrical stop			No		Yes	
	08	JOG right			Yes		No	
	11	Reverse (setpoint inversion)			Yes		No	
	13	Motor potentiometer MOP up			Yes		No	
	14	Motor potentiometer MOP down			Yes		No	
Note:	When BICO technology is used to allocate functions to panel buttons, this parameter displays the actual status of the relevant command.							

Parameter	Function	Range	Factory default	Can be changed	Scaling	Data set	Data type	Acc. Level
r0020	**CO: Frequency set-point before RFG [Hz]**	-	-	-	-	-	Float	3
	Displays actual frequency setpoint (input of ramp function generator). This value is available filtered (r0020) and unfiltered (r1119). The actual frequency setpoint after RFG is displayed in r1170.							
r0021	**CO: Actual filtered frequency [Hz]**	-	-	-	-	-	Float	2
	Displays actual inverter output frequency (r0024) excluding slip compensation (and resonance damping, frequency limitation in V/f mode).							
r0022	**Actual filtered rotor speed [RPM]**	-	-	-	-	-	Float	3
	Displays calculated rotor speed based on r0021 (filtered output frequency [Hz] x 120/number of poles). The value is updated every 128 ms.							
Note:	This calculation makes no allowance for load-dependent slip.							
r0024	**CO: Actual filtered output frequency [Hz]**	-	-	-	-	-	Float	3
	Displays actual filtered output frequency (slip compensation, resonance damping and frequency limitation are included). See also r0021. This value is available filtered (r0024) and unfiltered (r0066).							
r0025	**CO: Actual output voltage [V]**	-	-	-	-	-	Float	2
	Displays filtered [rms] voltage applied to motor. This value is available filtered (r0025) and unfiltered (r0072).							
r0026[0]	**CO: Actual filtered DC-link voltage [V]**	-	-	-	-	-	Float	2
	Displays filtered DC-link voltage. This value is available filtered (r0026) and unfiltered (r0070).							
Index:	[0]	Compensation DC voltage channel						
Note:	r0026[0] = Main DC-link voltage							
r0027	**CO: Actual output current [A]**	-	-	-	P2002	-	Float	2
	Displays rms value of motor current. This value is available filtered (r0027) and unfiltered (r0068).							
r0028	**CO: Motor current modulus**	-	-	-	P2002	-	Float	3
	Displays estimated rms value of motor current calculated from dclink current.							
r0031	**CO: Actual filtered torque [Nm]**	-	-	-	-	-	Float	2
	Displays electrical torque. This value is available filtered (r0031) and unfiltered (r0080).							
Note:	The electrical torque is not the same as the mechanical torque, which can be measured on the shaft. Due to windage and friction a part of the electrical torque is lost in the motor.							
r0032	**CO: Actual filtered power**	-	-	-	r2004	-	Float	2
	Displays (mechanical) shaft power. Value is displayed in [kW] or [hp] depending on setting for P0100 (operation for Europe/North America). P_mech = 2 * Pi * f * M --> r0032[kW] = (2 * Pi/1000) * (r0022/60)[1/min] * r0031[Nm] r0032[hp] = r0032[kW]/0.75							

Parameter	Function	Range	Factory default	Can be changed	Scaling	Data set	Data type	Acc. Level
r0035[0...2]	**CO: Actual motor temperature [°C]**	-	-	-	-	DDS	Float	2
	Displays calculated motor temperature.							
r0036	**CO: Inverter overload utilization [%]**	-	-	-	PERCENT	-	Float	3
	Displays inverter overload utilization calculated via the I^2t model. The actual I^2t value relative to the maximum possible I^2t value supplies utilization in [%]. If the current exceeds the threshold for P0294 (inverter I^2t overload warning), warning A505 (inverter I^2t) is generated and the output current of the inverter reduced via P0290 (inverter overload reaction). If 100 % utilization is exceeded, fault F5 (inverter I^2t) is tripped.							
r0037[0...1]	**CO: Inverter temperature [°C]**	-	-	-	-	-	Float	3
	Displays measured heat sink temperature and calculated junction temperature of IGBTs based on thermal model.							
Index:	[0]	Measured heat sink temperature						
	[1]	Total Chip Junction Temperature						
Note:	The values are updated every 128 ms.							
r0038	**CO: Filtered power factor**	-	-	-	-	-	Float	3
	Displays the filtered power factor.							
r0039	**CO: Energy consumpt. meter [kWh]**	-	-	-	-	-	Float	2
	Displays electrical energy used by inverter since display was last reset (see P0040 - reset energy consumption meter).							
Dependency:	Value is reset when P0040 = 1 (reset energy consumption meter).							
P0040	**Reset energy consumpt. and energy saved meter**	0 - 1	0	T	-	-	U16	2
	Resets value of r0039 (energy consumption meter) and r0043 (energy saved meter) to zero.							
	0	No reset						
	1	Reset r0039 to 0						
P0042[0...1]	**Energy saving scaling**	0.000 - 100.00	0.000	T	-	-	Float	2
	Scales the calculated energy saved value							
Index:	[0]	Factor for kWh to currency conversion						
	[1]	Factor for kWh to CO2 conversion						
r0043[0...2]	**Energy saved [kWh]**	-	-	-	-	-	Float	2
	Displays calculated energy saved							
Index:	[0]	Energy saving in kWh						
	[1]	Energy saving in currency						
	[2]	Energy saving in CO2						

Parameter	Function	Range	Factory default	Can be changed	Scaling	Data set	Data type	Acc. Level
r0050	**CO/BO: Active command data set**	-	-	-	-	-	U16	2
	Displays currently active command data set.							
	0	Command data set 0 (CDS)						
	1	Command data set 1 (CDS)						
	2	Command data set 2 (CDS)						
Note:	See P0810							
r0051[0...1]	**CO: Active inverter data set (DDS)**	-	-	-	-	-	U16	2
	Displays currently selected and active inverter data set (DDS).							
	0	Inverter data set 0 (DDS0)						
	1	Inverter data set 1 (DDS1)						
	2	Inverter data set 2 (DDS2)						
Index:	[0]	Selected inverter data set						
	[1]	Active inverter data set						
Note:	See P0820							
r0052.0...15	**CO/BO: Active status word 1**	-	-	-	-	-	U16	2
	Displays first active status word of inverter (bit format) and can be used to diagnose inverter status.							

	Bit	Signal name	1 signal	0 signal
	00	Inverter ready	Yes	No
	01	Inverter ready to run	Yes	No
	02	Inverter running	Yes	No
	03	Inverter fault active	Yes	No
	04	OFF2 active	No	Yes
	05	OFF3 active	No	Yes
	06	ON inhibit active	Yes	No
	07	Inverter warning active	Yes	No
	08	Deviation setpoint/act. value	No	Yes
	09	PZD control	Yes	No
	10	|f_act| >= P1082 (f_max)	Yes	No
	11	Warning: Motor current/torque limit	No	Yes
	12	Brake open	Yes	No
	13	Motor overload	No	Yes
	14	Motor runs right	Yes	No
	15	Inverter overload	No	Yes

Dependency:	r0052 bit 03 "Inverter fault active": Output of bit 3 (Fault) will be inverted on digital output (Low = Fault, High = No Fault); r0052 bit 06 "On inhibit" is active with OFF2 or OFF3 and becomes disabled with OFF1, NOT OFF2 and NOT OFF3.
Note:	See r2197 and r2198.

Parameter	Function		Range	Factory default	Can be changed	Scaling	Data set	Data type	Acc. Level
r0053.0...11	**CO/BO: Active status word 2**		-	-	-	-	-	U16	2
	Displays second status word of inverter (in bit format).								
	Bit	**Signal name**				**1 signal**		**0 signal**	
	00	DC brake active				Yes		No	
	01	|f_act| > P2167 (f_off)				Yes		No	
	02	|f_act| > P1080 (f_min)				Yes		No	
	03	Act. current |r0068| >= P2170				Yes		No	
	04	|f_act| > P2155 (f_1)				Yes		No	
	05	|f_act| <= P2155 (f_1)				Yes		No	
	06	f_act >= setpoint (f_set)				Yes		No	
	07	Act. unfilt. Vdc < P2172				Yes		No	
	08	Act. unfilt. Vdc > P2172				Yes		No	
	09	Ramping finished				Yes		No	
	10	PID output r2294 == P2292 (PID_min)				Yes		No	
	11	PID output r2294 == P2291 (PID_max)				Yes		No	
Notice:	r0053 bit 00 "DC brake active" ==> see P1233								
Note:	See r2197 and r2198.								
r0054.0...15	**CO/BO: Active control word 1**		-	-	-	-	-	U16	3
	Displays first control word of inverter (in bit format) and can be used to diagnose which commands are active.								
	Bit	**Signal name**				**1 signal**		**0 signal**	
	00	ON/OFF1				Yes		No	
	01	OFF2: electrical stop				No		Yes	
	02	OFF3: fast stop				No		Yes	
	03	Pulse enable				Yes		No	
	04	RFG enable				Yes		No	
	05	RFG start				Yes		No	
	06	Setpoint enable				Yes		No	
	07	Fault acknowledge				Yes		No	
	08	JOG right				Yes		No	
	09	JOG left				Yes		No	
	10	Control from PLC				Yes		No	
	11	Reverse (setpoint inversion)				Yes		No	
	13	Motor potentiometer MOP up				Yes		No	
	14	Motor potentiometer MOP down				Yes		No	
	15	CDS Bit 0 (Hand/Auto)				Yes		No	
Notice:	r0054 is identical to r2036 if USS is selected as command source via P0700 or P0719.								

Parameter	Function	Range	Factory default	Can be changed	Scaling	Data set	Data type	Acc. Level
r0055.0...15	**CO/BO: Active control word 2**	-	-	-	-	-	U16	3
	Displays additional control word of inverter (in bit format) and can be used to diagnose which commands are active.							
	Bit	**Signal name**			**1 signal**		**0 signal**	
	00	Fixed frequency Bit 0			Yes		No	
	01	Fixed frequency Bit 1			Yes		No	
	02	Fixed frequency Bit 2			Yes		No	
	03	Fixed frequency Bit 3			Yes		No	
	04	Inverter data set (DDS) Bit 0			Yes		No	
	05	Inverter data set (DDS) Bit 1			Yes		No	
	06	Quick stop disable			Yes		No	
	08	Enable PID			Yes		No	
	09	Enable DC brake			Yes		No	
	13	External fault 1			No		Yes	
	15	Command data set (CDS) Bit 1			Yes		No	
Notice:	r0055 is identical to r2037 if USS is selected as command source via P0700 or P0719.							
r0056.0...15	**CO/BO: Status of motor control**	-	-	-	-	-	U16	3
	Displays status of motor control (in bit format), which can be used to diagnose inverter status.							
	Bit	**Signal name**			**1 signal**		**0 signal**	
	00	Init. control finished			Yes		No	
	01	Motor demagnetizing finished			Yes		No	
	02	Pulses enabled			Yes		No	
	03	Voltage soft start select			Yes		No	
	04	Motor excitation finished			Yes		No	
	05	Starting boost active			Yes		No	
	06	Acceleration boost active			Yes		No	
	07	Frequency is negative			Yes		No	
	08	Field weakening active			Yes		No	
	09	Volts setpoint limited			Yes		No	
	10	Slip frequency limited			Yes		No	
	11	f_out > f_max Freq. limited			Yes		No	
	12	Phase reversal selected			Yes		No	
	13	Imax controller active/torque limit reached			Yes		No	
	14	Vdc_max controller active			Yes		No	
	15	KIB (Vdc_min control) active			Yes		No	
Notice:	The I-max controller (r0056 bit 13) will be activated when the actual output current (r0027) exceeds the current limit in r0067.							

Parameter	Function	Range	Factory default	Can be changed	Scaling	Data set	Data type	Acc. Level
r0066	**CO: Actual output frequency [Hz]**	-	-	-	-	-	Float	3
	Displays actual output frequency in Hz. This value is available filtered (r0024) and unfiltered (r0066).							
Note:	The output frequency is limited by the values entered in P1080 (minimum frequency) and P1082 (maximum frequency).							
r0067	**CO: Actual output current limit [A]**	-	-	-	P2002	-	Float	3
	Displays valid maximum output current of inverter. r0067 is influenced/determined by the following factors: • Inverter application P0205 • Rated motor current P0305 • Motor overload factor P0640 • Motor protection in dependency of P0610 • r0067 is less than or equal to maximum inverter current r0209 • Inverter protection in dependency of P0290							
Note:	A reduction of r0067 may indicate an inverter overload or a motor overload.							
r0068	**CO: Output current [A]**	-	-	-	P2002	-	Float	3
	Displays unfiltered [rms] value of motor current. This value is available filtered (r0027) and unfiltered (r0068).							
Note:	Used for process control purposes (in contrast to r0027, which is filtered and is used to display the value through USS).							
r0069[0...5]	**CO: Actual phase currents [A]**	-	-	-	P2002	-	Float	4
	Displays measured phase currents.							
Index:	[0]	U_Phase/ Emitter1/						
	[1]	Dclink/Emitter2						
	[2]	Dclink						
	[3]	Offset U_phase/Emitter						
	[4]	Offset dclink						
	[5]	Not used						
r0070	**CO: Actual DC-link voltage [V]**	-	-	-	-	-	Float	3
	Displays DC-link voltage. This value is available filtered (r0026) and unfiltered (r0070).							
Note:	Used for process control purposes (in contrast to r0026 (actual DC-link voltage), which is filtered).							
r0071	**CO: Maximum output voltage [V]**	-	-	-	-	-	Float	3
	Displays maximum output voltage.							
Dependency:	Actual maximum output voltage depends on the actual input supply voltage.							
r0072	**CO: Actual output voltage [V]**	-	-	-	-	-	Float	3
	Displays output voltage. This value is available filtered (r0025) and unfiltered (r0072).							
r0074	**CO: Actual modulation [%]**	-	-	-	PERCENT	-	Float	4
	Displays actual modulation index. The modulation index is defined as ratio between the magnitude of the fundamental component in the inverter phase output voltage and half of the DC-link voltage.							

Parameter	Function	Range	Factory default	Can be changed	Scaling	Data set	Data type	Acc. Level
r0078	**CO: Actual current Isq [A]**	-	-	-	P2002	-	Float	3
	Displays component of torque generating current. This value is available filtered (r0030) and unfiltered (r0078).							
r0080	**CO: Actual torque [Nm]**	-	-	-	-	-	Float	4
	Displays actual torque. This value is available filtered (r0031) and unfiltered (r0080).							
r0084	**CO: Actual air gap flux [%]**	-	-	-	PERCENT	-	Float	4
	Displays air gap flux relative to the rated motor flux.							
r0085	**CO: Actual re-active current [A]**	-	-	-	P2002	-	Float	3
	Displays re-active (imaginary part) of motor current.							
Dependency:	Applies when V/f control is selected in P1300 (control mode); otherwise, the display shows the value zero.							
r0086	**CO: Actual active current [A]**	-	-	-	P2002	-	Float	3
	Displays active (real part) of motor current.							
Dependency:	See r0085							
r0087	**CO: Actual power factor**	-	-	-	-	-	Float	3
	Displays the actual power factor.							
r0094	**CO: Transformation angle [°]**	-	0.0	-	4000H	-	Float	3
	Displays the transformation angle (flux angle in VC mode or angle from frequency in Vf mode).							
P0095[0...9]	**CI: Display PZD signals**	0 - 4294967295	0	T	4000H	-	U32	3
	Selects source of display for PZD signals.							
Index:	[0]	1st PZD signal						
	[1]	2nd PZD signal						
	...	...						
	[9]	10th PZD signal						
r0096[0...9]	**PZD signals [%]**	-	-	-	-	-	Float	3
	Displays PZD signals.							
Index:	[0]	1st PZD signal						
	[1]	2nd PZD signal						
	...	...						
	[9]	10th PZD signal						
Note:	r0096 = 100 % corresponds to 4000 hex.							
P0100	**Europe/North America**	0 - 2	0	C(1)	-	-	U16	1
	Determines whether the power settings are expressed in [kW] or [hp] (e.g. Rated motor power P0307). The default settings for the rated motor frequency P0310 and maximum frequency P1082 are set automatically here, in addition to reference frequency P2000.							
	0	Europe [kW], motor base frequency is 50 Hz						
	1	North America [hp], motor base frequency is 60 Hz						
	2	North America [kW], motor base frequency is 60 Hz						

Parameter	Function	Range	Factory default	Can be changed	Scaling	Data set	Data type	Acc. Level
Dependency:	Where: • Stop inverter first (i.e. disable all pulses) before you change this parameter. • P0100 can only be changed with P0010 = 1 (Commissioning mode) via the respective interface (for example, USS). • Changing P0100 resets all rated motor parameters as well as other parameters that depend on the rated motor parameters (see P0340 - calculation of motor parameters).							
r0191[0...2]	**Configuration inverter**	-	0	-	-	-	U32	4
	Displays the actual hardware configuration (SZL vector) of the inverter.							
Index:	[0]	SZL vector of inverter and power module						
	[1]	SZL vector of inverter						
	[2]	SZL vector of power module						
P0199	**Equipment system number**	0 - 65535	0	U, T	-	-	U16	2
	Specifies the unique equipment system number for the inverter.							
P0201[0...2]	**Actual power module code number**	0 - 65535	0	T	-	-	U16	3
	Identifies hardware variant.							
Index:	[0]	Inverter code						
	[1]	Functionality version - last digit of the article number						
	[2]	Last used inverter ID						
Notice:	Parameter P0201 = 0 indicates that no power module has been identified.							
r0204	**Power module features**	-	0	-	-	-	U32	3
	Displays hardware features of power module.							

	Bit	Signal name	1 signal	0 signal
	00	DC input voltage	Yes	No
	01	RFI filter	Yes	No
	02	Active line module	Yes	No
	03	SLM	Yes	No
	04	BLM with thryistor	Yes	No
	05	BLM with diode	Yes	No
	06	Water cooled	Yes	No
	07	F3E inverter	Yes	No
	12	Safe brake	Yes	No
	13	Safety enabled	Yes	No
	14	Integrated output filter	Yes	No
Note:	Parameter r0204 = 0 indicates that no power module has been identified.			

Parameter	Function	Range	Factory default	Can be changed	Scaling	Data set	Data type	Acc. Level
P0205	**Inverter application**	0 - 1	0	C1	-	-	U16	3

Selects inverter application.

The inverter and motor requirements are determined by the speed range and torque requirements of the load. The relationship between speed and torque for different loads (high overloads or low overloads) is shown in the following figure:

Torque	$M \sim \frac{1}{f}$	M = const.	M ~ f	$M \sim f^2$
Power	p = const.	p ~ f	$p \sim f^2$	$p \sim f^3$
Characteristic	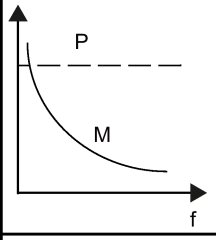	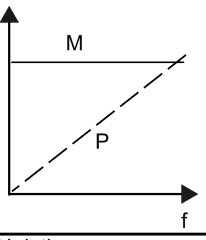	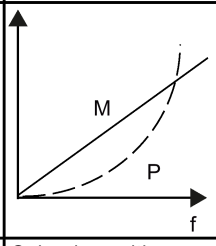	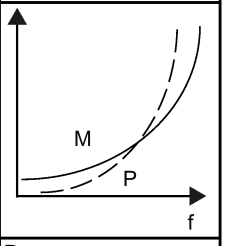
Application	Winders Facing lathes Rotary cutting machines	Hoisting gear Belt conveyors Process machines involving forming Rolling mills Planers Compressors	Calenders with viscous friction Eddy-current brakes	Pumps Fans Centrifuges

- High overload (HO):

  HO mode is used if the application needs a high overload on the whole frequency range. Many loads can be considered to be high overloads. Typical high overloads are conveyors, compressors and positive displacement pumps.

- Low overload (LO):

  LO mode is used if the application has a parabolic frequency/torque characteristic like many fans and pumps. Low overload offers the following possibilities with the same inverter:

  – Higher rated inverter current r0207
  – Higher rated inverter power r0206
  – Higher threshold for I2t protection

  If P0205 is modified in quick commissioning it immediately calculates various motor parameters:

  – P0305 Rated motor current
  – P0307 Rated motor power
  – P0640 Motor overload factor

  It is recommended to modify P0205 first. Afterwards motor parameter may be adapted.

  Motor parameter will be overridden by changing this sequence.

Parameter	Function	Range	Factory default	Can be changed	Scaling	Data set	Data type	Acc. Level
Values:	0	High overload						
	1	Low overload						
Notice:	Use setting 1 (low overload) only for low-overload applications (for example, pumps and fans). If it is used for high-overload applications, I2t warning will be produced too late, causing overheating in the motor.							
Note:	This parameter selects inverter application for FSE only. The parameter value is not reset by the factory setting (see P0970).							
r0206	**Rated inverter power [kW]/[hp]**	-	-	-	-	-	Float	2
	Displays nominal rated motor power from inverter.							
Dependency:	Value is displayed in [kW] or [hp] depending on setting for P0100 (operation for Europe/North America).							
r0207[0...2]	**Rated inverter current [A]**	-	-	-	-	-	Float	2
	Displays rated inverter current.							
Index:	[0]	Rated inverter current						
	[1]	Rated LO current						
	[2]	Rated HO current						
Note:	The rated high overload (HO) current r0207[2] values correspond to suitable 4-pole Siemens standard motors (IEC) for the selected load cycle (see diagram). r0207[2] is the default value of P0305 in association with the HO application (load cycle). 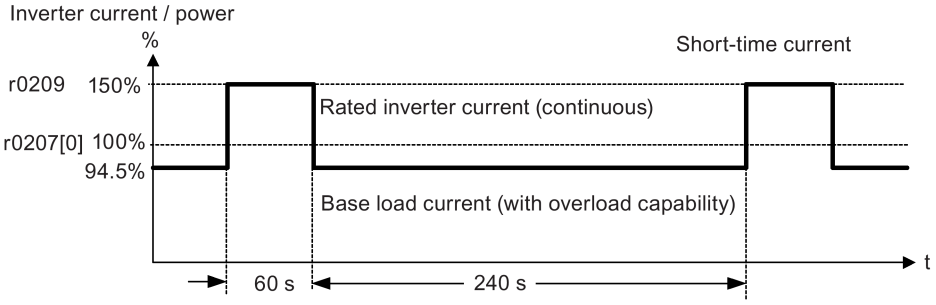							
r0208	**Rated inverter voltage [V]**	-	-	-	-	-	U32	2
	Displays nominal AC supply voltage of inverter.							
Note:	r0208 = 230: 200 V to 240 V (tolerance: -10% to +10%) r0208 = 400: 380 V to 480 V (tolerance: -15% to +10%)							

Parameter	Function	Range	Factory default	Can be changed	Scaling	Data set	Data type	Acc. Level
r0209	**Maximum inverter current [A]**	-	-	-	-	-	Float	2
	Displays maximum output current of inverter.							
Dependency:	r0209 depends on the derating which is affected by pulse frequency P1800, surrounding temperature and altitude. The data of deration is given in the Operating Instructions.							
P0210	**Supply voltage [V]**	380 - 480	400	T	-	-	U16	3
	P0210 defines the supply voltage. Its default value depends upon the type of inverter. If P0210 does not correspond to the supply voltage, then it must be modified.							
Dependency:	Optimizes Vdc controller, which extends the ramp-down time if regenerative energy from motor would otherwise cause DC-link overvoltage trips. Reducing the value enables controller to cut in earlier and reduce the risk of overvoltage. Set P1254 ("Auto detect Vdc switch-on levels") = 0. Cut-in levels for Vdc controller and compound braking are then derived directly from P0210 (supply voltage): • Vdc_min switch-on level (r1246) = P1245 * sqrt(2) * P0210 • Vdc_max switch-on level (r1242) = 1.15 * sqrt(2) * P0210 • Dynamic braking switch-on level = 1.13 * sqrt(2) * P0210 • Compound braking switch-on level = 1.13 * sqrt(2) * P0210 Set P1254 ("Auto detect Vdc switch-on levels") = 1. Cut-in levels for Vdc controller and compound braking are then derived from r0070 (DC-link voltage): • Vdc_min switch-on level (r1246) = P1245 * r0070 • Vdc_max switch-on level (r1242) = 1.15 * r0070 • Dynamic braking switch-on level = 0.98 * r1242 • Compound braking switch-on level = 0.98 * r1242 Auto-detection calculations are only performed when the inverter has been in standby for over 20s. When pulses are enabled, the calculated values are frozen until 20s after pulses cease.							
Note:	For best results, it is recommended that auto-detection of Vdc switch-on levels (P1254 = 1) is used. Setting P1254 = 0 is only recommended when there is a high degree of fluctuation of the DC-link when the motor is being driven. In this case, ensure the setting of P0210 is correct. If mains voltage is higher than value entered, automatic deactivation of the Vdc controller may occur to avoid acceleration of the motor. A warning will be issued in this case (A910). Default value is depending on inverter type and its rating data.							
r0231[0...1]	**Maximum cable length [m]**	-	-	-	-	-	U16	3
	Indexed parameter to display maximum allowable cable length between inverter and motor.							
Index:	[0]	Maximum allowed unscreened cable length						
	[1]	Maximum allowed screened cable length						
Notice:	For full EMC compliance, the screened cable must not exceed 25 m in length when an EMC filter is fitted.							
P0290	**Inverter overload reaction**	0 - 3	2	T	-	-	U16	3
	Selects reaction of inverter to an internal thermal overload condition.							
	0	Reduce output frequency and output current						
	1	No reduction, trip (F4/5/6) when thermal limits reached						
	2	Reduce pulse frequency, output current and output frequency						
	3	Reduce pulse frequency only and trip (F6) when overload too high						

Parameter	Function	Range	Factory default	Can be changed	Scaling	Data set	Data type	Acc. Level
Dependency:	Following physical values influence the inverter overload protection (see diagram): • Heat sink temperature (r0037[0]); causes A504 and F4. • IGBT Junction temperature (r0037[1]); causes F4 or F6. • Delta temperature between heat sink and junction temperature; causes A504 and F6. • Inverter I^2t (r0036); causes A505 and F5. 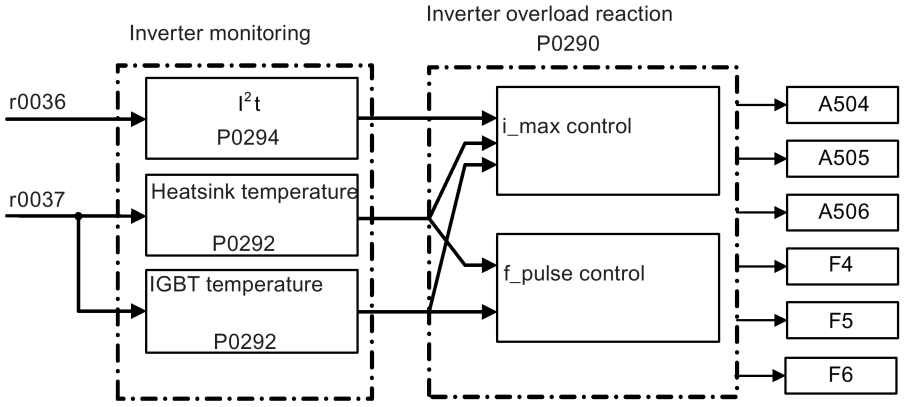							
Notice:	P0290 = 0, 2: • Reduction of output frequency is only effective if the load is also reduced. This is for example valid for light overload applications with a quadratic torque characteristic as pumps or fans. • For settings P0290 = 0 or 2, the I-max controller will act upon the output current limit (r0067) in case of overtemperature. P0290 = 0: • With pulse frequencies above nominal, pulse frequency will be reduced to nominal immediately in the event of r0027 greater than r0067 (current limit). P0290 = 2, 3: • The pulse frequency P1800 is reduced only if higher than 2 kHz and if the operating frequency is below 2 Hz. • The actual pulse frequency is displayed in r1801[0] and the minimal pulse frequency for reduction is displayed in r1801[1]. • Inverter I^2t acts upon output current and output frequency, but not on pulse frequency. A trip will always result, if the action taken does not sufficiently reduce internal temperatures.							
P0291[0...2]	**Inverter protection**	0 - 7	1	T	-	DDS	U16	4
	Bit 00 for enabling/disabling automatic pulse frequency reduction at output frequencies below 2 Hz. The benefit is to reduce the noises at frequencies below 2 Hz.							
	Bit	**Signal name**			**1 signal**		**0 signal**	
	00	Pulse frequency reduced below 2 Hz			Yes		No	
	01	Reserved			Yes		No	
	02	Phase loss detection enable			Yes		No	
Note:	See P0290							

Parameter	Function	Range	Factory default	Can be changed	Scaling	Data set	Data type	Acc. Level
P0292	**Inverter temperature warning [°C]**	0 - 25	5	U, T	-	-	U16	3
	Defines the temperature difference (in °C) between the overtemperature trip threshold (F4) and the warning threshold (A504) of the inverter. The trip threshold is stored internally by the inverter and cannot be changed by the user.							
P0294	**Inverter I^2t warning [%]**	10.0 - 100.0	95.0	U, T	-	-	Float	3
	Defines the [%] value at which warning A505 (inverter I^2t) is generated. Inverter I^2t calculation is used to determine a maximum tolerable period for inverter overload. The I^2t calculation value is deemed = 100 % when this maximum tolerable period is reached.							
Dependency:	• The output current of the inverter has been reduced. • The value of I^2t does not exceed 100 %.							
Note:	P0294 = 100 % corresponds to stationary nominal load.							
P0295	**Inverter fan off delay time [s]**	0 - 3600	0	U, T	-	-	U16	3
	Defines inverter fan switch off delay time in seconds after inverter has stopped.							
Note:	Setting to 0, inverter fan will switch off when the inverter stops, that means no delay.							
P0301[0...2]	**Easy motor data, rated motor power [kW]**	0 - 2000	0	C(1)	-	DDS	Float	1
	Rated motor power from the rating plate. No other data is necessary. If this parameter is used, the rest of the motor data are then estimated by the firmware.							
Dependency:	Changeable only when P0010 = 1 (quick commissioning).							
Caution:	This functionality is only valid with 50 Hz supply, star configuration on 4-pole motors. You must set this parameter to zero if you desire to set the other motor data.							
P0304[0...2]	**Rated motor voltage [V]**	10 - 2000	400	C(1)	-	DDS	U16	1
	Nominal motor voltage from rating plate.							
Dependency:	Changeable only when P0010 = 1 (quick commissioning). Default value is depending on inverter type and its rating data.							
Caution:	The input of rating plate data must correspond with the wiring of the motor (star/delta). This means, if delta wiring is used for the motor, delta rating plate data has to be entered. 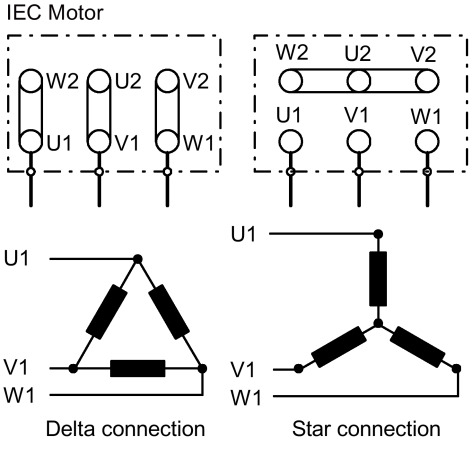							

Parameter	Function	Range	Factory default	Can be changed	Scaling	Data set	Data type	Acc. Level
Note:	Following diagram shows a typical rating plate with the locations of the relevant motor data. 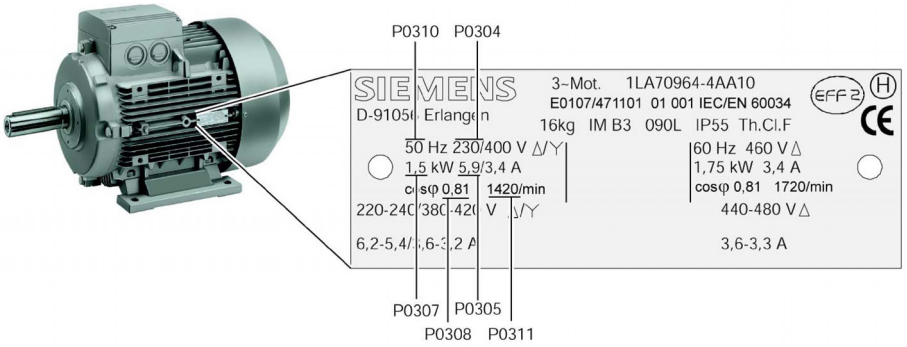							
P0305[0...2]	**Rated motor current [A]**	0.01 - 10000.00	1.86	C(1)	-	DDS	Float	1
	Nominal motor current from rating plate.							
Dependency:	Changeable only when P0010 = 1 (quick commissioning). Depends also on P0320 (motor magnetization current).							
Note:	The maximum value of P0305 depends on the maximum inverter current r0209 and the motor type: Asynchronous motor : P0305_max = P0209 It is recommended that the ratio of P0305 (rated motor current) and r0207 (rated inverter current) should not be lower than: (1/8) <= (P0305/r0207) When the relation of the nominal motor current P0305 and half of the maximal inverter current (r0209) exceeds 1.5 an additional current derating is applied. This is necessary to protect the inverter from harmonic current waves. 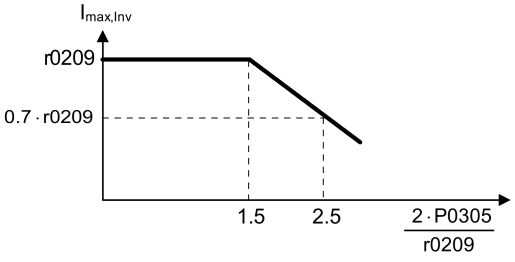 Default value is depending on inverter type and its rating data.							
P0307[0...2]	**Rated motor power**	0.01 - 2000.00	0.75	C(1)	-	DDS	Float	1
	Nominal motor power [kW/hp] from rating plate.							
Dependency:	If P0100 = 1, values will be in [hp]. Changeable only when P0010 = 1 (quick commissioning).							
Note:	Default value is depending on inverter type and its rating data.							
P0308[0...2]	**Rated motor cosφ**	0.000 - 1.000	0.000	C(1)	-	DDS	Float	1
	Nominal motor power factor (cosφ) from rating plate.							
Dependency:	Changeable only when P0010 = 1 (quick commissioning). Visible only when P0100 = 0 or 2, (motor power entered in [kW]). Setting 0 causes internal calculation of value. The value is displayed in r0332.							

Parameter	Function	Range	Factory default	Can be changed	Scaling	Data set	Data type	Acc. Level
P0309[0...2]	**Rated motor efficiency [%]**	0.0 - 99.9	0.0	C(1)	-	DDS	Float	1
	Nominal motor efficiency from rating plate.							
Dependency:	Changeable only when P0010 = 1 (quick commissioning). Visible only when P0100 = 1, (i.e. motor power entered in [hp]). Setting 0 causes internal calculation of value. The value is displayed in r0332.							
P0310[0...2]	**Rated motor frequency [Hz]**	12.00 - 550.00	50.00	C(1)	-	DDS	Float	1
	Nominal motor frequency from rating plate.							
Dependency:	Changeable only when P0010 = 1 (quick commissioning). Pole pair number recalculated automatically if parameter is changed.							
Note:	Changes to P0310 can influence the maximum motor frequency. For further information see P1082.							
P0311[0...2]	**Rated motor speed [RPM]**	0 - 40000	1395	C(1)	-	DDS	U16	1
	Nominal motor speed from rating plate.							
Dependency:	Changeable only when P0010 = 1 (quick commissioning). Setting 0 causes internal calculation of value. Slip compensation in V/f control requires rated motor speed for correct operation. Pole pair number recalculated automatically if parameter is changed.							
Note:	Default value is depending on inverter type and its rating data.							
r0313[0...2]	**Motor pole pairs**	-	-	-	-	DDS	U16	3
	Displays number of motor pole pairs that the inverter is currently using for internal calculations.							
Dependency:	Recalculated automatically when P0310 (rated motor frequency) or P0311 (rated motor speed) is changed. r0313 = 1: 2-pole motor r0313 = 2: 4-pole motor ...							
P0314[0...2]	**Motor pole pair number**	0 - 99	0	C(1)	-	DDS	U16	3
	Specifies number of pole pairs of motor.							
Dependency:	Changeable only when P0010 = 1 (quick commissioning). Setting 0 causes r0313 (calculated motor pole pairs) to be used during operation. Setting to > 0 overrides r0313. P0314 = 1: 2-pole motor P0314 = 2: 4-pole motor ...							
P0320[0...2]	**Motor magnetizing current [%]**	0.0 - 99.0	0.0	C, T	-	DDS	Float	3
	Defines motor magnetization current relative to P0305 (rated motor current).							
Dependency:	Setting 0 causes calculation by P0340 = 1 (data entered from rating plate) or by P3900 = 1 - 3 (end of quick commissioning). The calculated value is displayed in r0331.							
r0330[0...2]	**Rated motor slip [%]**	-	-	-	PERCENT	DDS	Float	3
	Displays nominal motor slip relative to P0310 (rated motor frequency) and P0311 (rated motor speed). r0330[%] = ((P0310 - r0313 * (P0311/60))/P0310) * 100%							
r0331[0...2]	**Rated magnetization current [A]**	-	-	-	-	DDS	Float	3
	Displays calculated magnetizing current of motor.							

Parameter	Function	Range	Factory default	Can be changed	Scaling	Data set	Data type	Acc. Level
r0332[0...2]	**Rated power factor**	-	-	-	-	DDS	Float	3
	Displays power factor for motor.							
Dependency:	Value is calculated internally if P0308 (rated motor cosφ) set to 0; otherwise, value entered in P0308 is displayed.							
r0333[0...2]	**Rated motor torque [Nm]**	-	-	-	-	DDS	Float	3
	Displays rated motor torque.							
Dependency:	Value is calculated from P0307 (rated motor power) and P0311 (rated motor speed). r0333[Nm] = (P0307[kW] * 1000)/((P0311[1/min]/60) * 2 * Pi)							
P0335[0...2]	**Motor cooling**	0 - 3	0	C, T	-	DDS	U16	2
	Selects motor cooling system used.							
	0	Self-cooled: Shaft mounted fan attached motor						
	1	Force-cooled: Separately powered cooling fan						
	2	Self-cooled and internal fan						
	3	Force-cooled and internal fan						
P0340[0...2]	**Calculation of motor parameters**	0 - 4	0	T	-	DDS	U16	2
	Calculates various motor parameters.							

		P0340 = 1	P0340 = 2	P0340 = 3	P0340 = 4
	P0341[0...2] Motor inertia [kg*m^2]	x			
	P0342[0...2] Total/motor inertia ratio	x			
	P0344[0...2] Motor weight	x			
	P0346[0...2] Magnetization time	x		x	
	P0347[0...2] Demagnetization time	x		x	
	P0350[0...2] Stator resistance (line-to-line)	x	x		
	P0352[0...2] Cable resistance	x	x		
	P0354[0...2] Rotor resistance	x	x		
	P0356[0...2] Stator leakage inductance	x	x		
	P0358[0...2] Rotor leakage inductance	x	x		
	P0360[0...2] Main inductance	x	x		
	P0625[0...2] Surrounding motor temperature	x	x		
	P1253[0...2] Controller output limitation	x		x	
	P1316[0...2] Boost end frequency	x		x	
	P1338[0...2] Resonance damping gain V/f	x		x	x
	P1341[0...2] Imax controller integral time	x		x	x
	P1345[0...2] Imax voltage ctrl. prop. gain	x		x	x
	P1346[0...2] Imax voltage ctrl. integral time	x		x	x
	P2002[0...2] Reference current	x			
	P2003[0...2] Reference torque	x			
	P2185[0...2] Upper torque threshold 1	x			
	P2187[0...2] Upper torque threshold 2	x			
	P2189[0...2] Upper torque threshold 3	x			

Parameter	Function	Range	Factory default	Can be changed	Scaling	Data set	Data type	Acc. Level
	0	No calculation						
	1	Complete parameterization						
	2	Calculation of equivalent circuit data						
	3	Calculation of V/f control data						
	4	Calculation of controller settings only						
Note:	This parameter is required during commissioning to optimize inverter performance. If there is a large mismatch in Power ratings of Inverter to Motor it is possible that r0384 and r0386 may not be calculated correctly. In these cases use P1900. When transferring P0340, the inverter uses its processor to carry out internal calculations. Communications to the inverter may be interrupted. The faults can be acknowledged as soon as the calculations have been completed in the inverter. These calculations can take approximately 10s to complete.							
P0341[0...2]	**Motor inertia [kg*m^2]**	0.0001 - 1000.0	0.0018	U, T	-	DDS	Float	3
	Sets no-load inertia of motor. Together with P0342 (inertia ratio total/motor) and P1496 (scaling factor acceleration), this value produces the acceleration torque (r1518), which can be added to any additional torque produced from a BICO source (P1511), and incorporated in the torque control function.							
Dependency:	This parameter is influenced by automatic calculations defined by P0340.							
Note:	The result of P0341 * P0342 is included in the speed controller calculation. P0341 * P0342 = total motor inertia P1496 = 100 % activates acceleration pre-control for the speed controller and calculates the torque from P0341 and P0342.							
P0342[0...2]	**Total/motor inertia ratio**	1.000 - 400.00	1.000	U, T	-	DDS	Float	3
	Specifies ratio between total inertia (load + motor) and motor inertia.							
Dependency:	See P0341							
P0344[0...2]	**Motor weight [kg]**	1.0 - 6500.0	9.4	U, T	-	DDS	Float	3
	Specifies motor weight [kg].							
Dependency:	See P0341							
Note:	This value is used in the motor thermal model. It is normally calculated automatically from P0340 (motor parameters) but can also be entered manually. Default value is depending on inverter type and its rating data.							
r0345[0...2]	**Motor start-up time [s]**	-	-	-	-	DDS	Float	3
	Displays motor start-up time. This time corresponds to the standardized motor inertia. The start-up time is the time taken to reach rated motor speed from standstill at acceleration with rated motor torque (r0333).							
P0346[0...2]	**Magnetization time [s]**	0.000 - 20.000	1.000	U, T	-	DDS	Float	3
	Sets magnetization time [s], i.e. waiting time between pulse enable and start of ramp-up. Motor magnetization builds up during this time. Magnetization time is normally calculated automatically from the motor data and corresponds to the rotor time constant.							
Dependency:	See P0341							
Notice:	An excessive reduction of this time can result in insufficient motor magnetization.							
Note:	If boost settings are higher than 100 %, magnetization time may be reduced. Default value is depending on inverter type and its rating data.							

Parameter	Function	Range	Factory default	Can be changed	Scaling	Data set	Data type	Acc. Level
P0347[0...2]	**Demagnetization time [s]**	0.000 - 20.000	1.000	U, T	-	DDS	Float	3
	Changes time allowed after OFF2/fault condition, before pulses can be re-enabled.							
Dependency:	See P0341							
Notice:	Not active following a normally completed ramp-down, e.g. after OFF1, OFF3 or JOG. Overcurrent trips will occur if the time is decreased excessively.							
Note:	The demagnetization time is approximately 2.5 x rotor time constant in seconds. Default value is depending on inverter type and its rating data.							
P0350[0...2]	**Stator resistance (line) [Ω]**	0.00001 - 2000.0	2.0000	U, T	-	DDS	Float	3
	Stator resistance value for connected motor (line value). The parameter value doesn't include the cable resistance.							
Dependency:	See P0341							
Note:	There are three ways to determine the value for this parameter: • Calculate using – P0340 = 1 (data entered from rating plate) or – P0010 = 1, P3900 = 1, 2 or 3 (end of quick commissioning). • Measure using P1900 = 2 (standard motor data identification - value for stator resistance is overwritten). • Measure manually using an Ohmmeter. Since the manually measured resistor is a line-to-line value, which includes the cable resistors, the measured value has to be divided by two and the cable resistor of a line has to be subtracted from that value. The value entered in P0350 is the one obtained by the method last used. Default value is depending on inverter type and its rating data.							
P0352[0...2]	**Cable resistance [Ω]**	0.0 - 120.0	0.0	U, T	-	DDS	Float	3
	Cable resistance value between inverter and motor for one phase.							
Dependency:	See P0341							
P0354[0...2]	**Rotor resistance [Ω]**	0.0 - 300.0	10.0	U, T	-	DDS	Float	3
	Sets rotor resistance of motor equivalent circuit (phase value).							
Dependency:	Calculated automatically using the motor model or determined using P1900 (motor identification). This parameter is influenced by automatic calculations defined by P0340.							
P0356[0...2]	**Stator leakage inductance [mH]**	0.00001 - 1000.0	10.000	U, T	-	DDS	Float	3
	Sets stator leakage inductance of motor equivalent circuit (phase value).							
Dependency:	See P0354							
P0358[0...2]	**Rotor leakage inductance [mH]**	0.0 - 1000.0	10.0	U, T	-	DDS	Float	3
	Sets rotor leakage inductance of motor equivalent circuit (phase value).							
Dependency:	See P0354							
P0360[0...2]	**Main inductance [mH]**	0.0 - 10000.0	10.0	U, T	-	DDS	Float	3
	Sets main inductance of the motor equivalent circuit (phase value).							
Dependency:	See P0354							
Caution:	The data of equivalent circuit relates to the star equivalent circuit. Any data of the delta equivalent circuit available therefore must be transformed to the star equivalent circuit before entering into the inverter.							

Parameter	Function	Range	Factory default	Can be changed	Scaling	Data set	Data type	Acc. Level
r0370[0...2]	**Stator resistance [%]**	-	-	-	PERCENT	DDS	Float	4
	Displays standardized stator resistance of motor equivalent circuit (phase value).							
r0372[0...2]	**Cable resistance [%]**	-	-	-	PERCENT	DDS	Float	4
	Displays standardized cable resistance of motor equivalent circuit (phase value). It is estimated to be 20 % of the stator resistance.							
r0373[0...2]	**Rated stator resistance [%]**	-	-	-	PERCENT	DDS	Float	4
	Displays rated stator resistance of the motor equivalent circuit (phase value).							
r0374[0...2]	**Rotor resistance [%]**	-	-	-	PERCENT	DDS	Float	4
	Displays standardized rotor resistance of the motor equivalent circuit (phase value).							
r0376[0...2]	**Rated rotor resistance [%]**	-	-	-	PERCENT	DDS	Float	4
	Displays rated rotor resistance of the motor equivalent circuit (phase value).							
r0377[0...2]	**Total leakage reactance [%]**	-	-	-	PERCENT	DDS	Float	4
	Displays standardized total leakage reactance of the motor equivalent circuit (phase value).							
r0382[0...2]	**Main reactance [%]**	-	-	-	PERCENT	DDS	Float	4
	Displays standardized main reactance of the motor equivalent circuit (phase value).							
r0384[0...2]	**Rotor time constant [ms]**	-	-	-	-	DDS	Float	3
	Displays calculated rotor time constant.							
r0386[0...2]	**Total leakage time constant [ms]**	-	-	-	-	DDS	Float	4
	Displays total leakage time constant of motor.							
r0395	**CO: Total stator resistance [%]**	-	-	-	PERCENT	-	Float	3
	Displays stator resistance of motor of combined stator/cable resistance.							
P0503[0...2]	**Enable Keep-running Operation**	0 - 1	0	T	-	-	U16	3
	Enables keep-running operation. This attempts to prevent the inverter from tripping by enabling all possible existing de-rating features, and the automatic restart function. May be used with P2113 = 1 (inverter warnings disabled) to mask resulting warnings from the user.							
	0	Keep-running mode disabled						
	1	Keep-running mode enabled						
Index:	[0]	Inverter data set 0 (DDS0)						
	[1]	Inverter data set 1 (DDS1)						
	[2]	Inverter data set 2 (DDS2)						

Parameter	Function	Range	Factory default	Can be changed	Scaling	Data set	Data type	Acc. Level
Notice:	P0503 = 1 Sets the following parameter values to minimize likelihood of a trip: • P0290 = 2 (inverter overload reaction: reduce pulse frequency, output current and output frequency) • P1210 = 7 (automatic restart function: restart after mains brown- /blackout or fault, trip when P1211 expires) • P1211 = 10 (number of times inverter will attempt to restart) • P1240 = 3 (configuration of Vdc controller: Vdc_max controller and kinetic buffering (KIB) enabled) P0503 = 0 Resets the parameters to their default values: • P0290 = 2 (inverter overload reaction: reduce pulse frequency, output current and output frequency) • P1210 = 1 (automatic restart function: trip reset after power on, P1211 disabled) • P1211 = 3 (number of times inverter will attempt to restart) • P1240 = 1(configuration of Vdc controller: Vdc_max controller enabled)							
Note:	See also P0290, P1210, P1211, P1240, and P2113							
P0507	**Application macro**	0 - 255	0	C(1)	-	-	U16	1
	Selects a given Application macro, which is a set of parameter values for a given application. There are a number of application macros covering a set of basic applications such as simple pump, conveyor, compressor etc.							
Note:	Please note that to guarantee correct setting of the Application macro, the Application macro number should only be changed during Setup directly after a parameter reset.							
P0511[0...2]	**Scaling for display**	0.00 - 100.00	[0] 1.00 [1] 1.00 [2] 0.00	U, T	-	-	Float	3
	Allows operator to enter the scaling factors for the display of motor frequency. Index 0 = value of multiplier (a) Index 1 = value of divisor (b) Index 2 = value of constant (c) With the parameter set to a non-default value the displayed value for frequency and setpoint on internal and external BOPs is scaled accordingly. Note - the units "Hz" is no longer displayed if the value is scaled. The formula used to scale the display is: (a/b)*N + c.							
Index:	[0]	Multiplier for Scaling for display						
	[1]	Divider for Scaling for display						
	[2]	Constant for Scaling for display						
r0512	**CO: Scaled filtered frequency**	-	-	-	-	-	Float	2
	Displays actual inverter output frequency (r0024) excluding slip compensation (and resonance damping, frequency limitation in V/f mode).							
P0604[0...2]	**Threshold motor temperature [°C]**	0.0 - 200.0	130.0	U, T	-	DDS	Float	2
	Enters warning threshold for motor temperature protection. The trip temperature defined is always 10 % higher than the warning threshold P0604. When actual motor temperature exceeds warning temperature then inverter reacts as defined in P0610.							
Dependency:	This value should be at least 40°C higher than the motor surrounding temperature P0625.							

Parameter	Function	Range	Factory default	Can be changed	Scaling	Data set	Data type	Acc. Level
P0610[0...2]	**Motor I^2t temperature reaction**	0 - 6	6	T	-	DDS	U16	3
	Defines reaction when motor temperature reaches warning threshold.							
	0	Warning only. Does not recall the motor temperature (stored at power down) on power up						
	1	Warning with Imax control (motor current reduced) and trip (F11). Does not recall the motor temperature (stored at power down) on power up						
	2	Warning and trip (F11). Does not recall the motor temperature (stored at power down) on power up						
	4	Warning only. Recalls the motor temperature (stored at power down) on power up						
	5	Warning with Imax control (motor current reduced) and trip (F11). Recalls the motor temperature (stored at power down) on power up						
	6	Warning and trip (F11). Recalls the motor temperature (stored at power down) on power up						
Dependency:	Trip level = P0604 (motor temperature threshold) * 110 %							
Note:	• P0610 = 0 (No reaction, warning only) When temperature reaches warning level defined in P0604, the inverter displays warning A511, no reaction is done. • P0610 = 1 (Warning, Imax reduction and Trip) When temperature reaches warning level defined in P0604, the inverter displays warning A511, reduce frequency and trips F11, when temperature exceeds the trip level. • P0610 = 2 (Warning and trip F11) When temperature reaches warning level defined in P0604, the inverter displays warning A511 and trips F11, when temperature exceeds the trip level. The purpose of motor I^2t is to calculate the motor temperature and disable the inverter if the motor is in danger of overheating. I^2t operation: The measured motor current is displayed in r0027. The motor temperature in °C is displayed in r0035. This temperature is derived from a calculated value using motor thermal model. The reaction to the warning can be changed from this default using P0610. r0035 is particularly useful to monitor if the calculated motor temperature is rising excessively.							
P0622[0...2]	**Magnetizing time for temp id after start up [ms]**	0.000 - 20000	0.000	U, T	-	DDS	Float	3
	Specifies the magnetization time for stator resistance identification.							
r0623[0...2]	**CO: Display for the identified stator resistance [Ω]**	-	-	-	-	DDS	Float	4
	Display of the actual identified stator resistance after temperature identification.							
P0625[0...2]	**Surrounding motor temperature [°C]**	-40.0 - 80.0	20.0	C, U, T	-	DDS	Float	3
	Surrounding temperature of motor at time of motor data identification. It is only allowed to change the value when the motor is cold. A motor identification has to be made after changing the value.							
Dependency:	This parameter is influenced by automatic calculations defined by P0340.							

Parameter	Function	Range	Factory default	Can be changed	Scaling	Data set	Data type	Acc. Level
P0626[0...2]	**Overtemperature stator iron [°C]**	20.0 - 200.0	50.0	U, T	-	DDS	Float	4
	Overtemperature of stator iron.							
Note:	Temperature rises are valid for sinusoidal operations (line supply temperature rises). Temperature rises due to inverter operation (modulation losses) and output filter are also considered.							
P0627[0...2]	**Overtemperature stator winding [°C]**	20.0 - 200.0	80.0	U, T	-	DDS	Float	4
	Overtemperature of the stator winding. It is only allowed to change the value when the motor is cold. A motor identification has to be made after changing the value.							
Note:	See P0626							
P0628[0...2]	**Overtemperature rotor winding [°C]**	20.0 - 200.0	100.0	U, T	-	DDS	Float	4
	Overtemperature of the rotor winding.							
Note:	See P0626							
r0630[0...2]	**CO: Motor model surrounding temp. [°C]**	-	-	-	-	DDS	Float	4
	Displays the surrounding temperature of the motor mass model.							
r0631[0...2]	**CO: Stator iron temperature [°C]**	-	-	-	-	DDS	Float	4
	Displays the iron temperature of the motor mass model.							
r0632[0...2]	**CO: Stator winding temperature [°C]**	-	-	-	-	DDS	Float	4
	Displays the stator winding temperature of the motor mass model.							
r0633[0...2]	**CO: Rotor winding temperature [°C]**	-	-	-	-	DDS	Float	4
	Displays the rotor winding temperature of the motor mass model.							
P0640[0...2]	**Motor overload factor [%]**	10.0 - 400.0	150.0	C, U, T	-	DDS	Float	2
	Defines motor overload current limit relative to P0305 (rated motor current).							
Dependency:	Limited to maximum inverter current or to 400 % of rated motor current (P0305), whichever is the lower. P0640_max = (min(r0209, 4 * P0305)/P0305) * 100							
Note:	Changes to P0640 will be effective only after the next off state.							
P0700[0...2]	**Selection of command source**	0 - 5	1	C, T	-	CDS	U16	1
	Selects digital command source.							
	0	Factory default setting						
	1	Operator panel (keypad)						
	2	Terminal						
	5	USS/MODBUS on RS485						
Dependency:	Changing this parameter sets (to default) all settings on item selected. These are the following parameters: P0701, ... (function of digital input), P0840, P0842, P0844, P0845, P0848, P0849, P0852, P1020, P1021, P1022, P1023, P1035, P1036, P1055, P1056, P1074, P1110, P1113, P1124, P1140, P1141, P1142, P1230, P2103, P2104, P2106, P2200, P2220, P2221, P2222, P2223, P2235, P2236							
Caution:	Be aware, by changing of P0700 all BI parameters are reset to the default value.							

Parameter	Function	Range	Factory default	Can be changed	Scaling	Data set	Data type	Acc. Level
Note:	RS485 also supports MODBUS protocol as well as USS. All USS options on RS485 are also applicable to MODBUS. If P0700 = 0, the values of the following parameters relevant to the digital input function will be restricted to their defaults: P0701, P0702, P0703, P0704, P0712 and P0713.							
P0701[0...2]	**Function of digital input 1**	0 - 99	0	T	-	CDS	U16	2
	Selects function of digital input 1.							
	0	Digital input disabled						
	1	ON/OFF1						
	2	ON reverse/OFF1						
	3	OFF2 - coast to standstill						
	4	OFF3 - quick ramp-down						
	5	ON/OFF2						
	9	Fault acknowledge						
	10	JOG right						
	11	JOG left						
	12	Reverse						
	13	MOP up (increase frequency)						
	14	MOP down (decrease frequency)						
	15	Fixed frequency selector bit0						
	16	Fixed frequency selector bit1						
	17	Fixed frequency selector bit2						
	18	Fixed frequency selector bit3						
	22	QuickStop Source 1						
	23	QuickStop Source 2						
	24	QuickStop Override						
	25	DC brake enable						
	27	Enable PID						
	29	External trip						
	33	Disable additional freq setpoint						
	99	Enable BICO parameterization						
Dependency:	Resetting 99 (enable BICO parameterization) requires: • P0700 command source or • P0010 = 1, P3900 = 1, 2 or 3 (quick commissioning) or • P0010 = 30, P0970 = 1 factory reset in order to reset							
Note:	"ON/OFF1" can only be selected for one digital input (e.g. P0700 = 2 and P0701 = 1). Configuring DI2 with P0702 = 1 will disable digital input 1 by setting P0701 = 0. Only the last activated digital input serves as a command source. "ON/OFF1" on a digital input can be combined with "ON reverse/OFF1" on another digital input.							

Parameter	Function	Range	Factory default	Can be changed	Scaling	Data set	Data type	Acc. Level
P0702[0...2]	**Function of digital input 2**	0 - 99	0	T	-	CDS	U16	2
	Selects function of digital input 2. See P0701.							
P0703[0...2]	**Function of digital input 3**	0 - 99	9	T	-	CDS	U16	2
	Selects function of digital input 3. See P0701.							
P0704[0...2]	**Function of digital input 4**	0 - 99	15	T	-	CDS	U16	2
	Selects function of digital input 4. See P0701.							
P0705[0...2]	**Function of digital input 5**	0 - 99	16	T	-	CDS	U16	2
	Selects function of digital input 5. See P0701.							
Note:	This digital input is provided by the optional I/O Extension Module.							
P0706[0...2]	**Function of digital input 6**	0 - 99	17	T	-	CDS	U16	2
	Selects function of digital input 6. See P0701.							
Note:	This digital input is provided by the optional I/O Extension Module.							
P0712[0...2]	**Analog/digital input 1**	0 - 99	0	T	-	CDS	U16	2
	Selects function of digital input AI1 (via analog input). See P0701.							
Note:	See P0701. Signals above 4 V are active; signals below 1.6 V are inactive.							
P0713[0...2]	**Analog/digital input 2**	0 - 99	0	T	-	CDS	U16	2
	Selects function of digital input AI2 (via analog input). See P0701.							
Note:	See P0701. Signals above 4 V are active; signals below 1.6 V are inactive.							
P0717	**Connection macro**	0 - 255	0	C(1)	-	-	U16	1
	Selects a given connection macro, which is a set of parameter values for a given set of control connections. There are a number of connection macros which define basic control connection settings such as Terminals, BOP, PID with analog setpoint etc.							
Note:	Please note that to guarantee correct setting of the Connection macro, the Connection macro number should only be changed during Setup directly after a parameter reset.							

Parameter	Function	Range	Factory default	Can be changed	Scaling	Data set	Data type	Acc. Level
P0719[0...2]	**Selection of command & frequency setpoint**	0 - 57	0	T	-	CDS	U16	4
	Central switch to select control command source for inverter. Switches command and setpoint source between freely programmable BICO parameters and fixed command/setpoint profiles. Command and setpoint sources can be changed independently. The tens digit chooses the command source and the units digit chooses the setpoint source.							
	0	Cmd = BICO parameter, Setpoint = BICO parameter						
	1	Cmd = BICO parameter, Setpoint = MOP setpoint						
	2	Cmd = BICO parameter, Setpoint = Analog setpoint						
	3	Cmd = BICO parameter, Setpoint = Fixed frequency						
	4	Cmd = BICO parameter, Setpoint = USS on RS232 (reserved)						
	5	Cmd = BICO parameter, Setpoint = USS/MODBUS on RS485						
	7	Cmd = BICO parameter, Setpoint = Analog setpoint 2						
	40	Cmd = USS on RS232 (reserved), Setpoint = BICO parameter						
	41	Cmd = USS on RS232 (reserved), Setpoint = MOP setpoint						
	42	Cmd = USS on RS232 (reserved), Setpoint = Analog setpoint						
	43	Cmd = USS on RS232 (reserved), Setpoint = Fixed frequency						
	44	Cmd = USS on RS232 (reserved), Setpoint = USS on RS232 (reserved)						
	45	Cmd = USS on RS232 (reserved), Setpoint = USS/MODBUS on RS485						
	47	Cmd = USS on RS232 (reserved), Setpoint = Analog setpoint 2						
	50	Cmd = USS/MODBUS on RS485, Setpoint = BICO parameter						
	51	Cmd = USS/MODBUS on RS485, Setpoint = MOP setpoint						
	52	Cmd = USS/MODBUS on RS485, Setpoint = Analog setpoint						
	53	Cmd = USS/MODBUS on RS485, Setpoint = Fixed frequency						
	54	Cmd = USS/MODBUS on RS485, Setpoint = USS on RS232 (reserved)						
	55	Cmd = USS/MODBUS on RS485, Setpoint = USS/MODBUS on RS485						
	57	Cmd = USS/MODBUS on RS485, Setpoint = Analog setpoint 2						
Dependency:	P0719 has higher priority than P0700 and P1000. If set to a value other than 0 (i.e. BICO parameter is not the setpoint source), P0844/P0848 (first source of OFF2/OFF3) are not effective; instead, P0845/P0849 (second source of OFF2/OFF3) apply and the OFF commands are obtained via the particular source defined. BICO connections made previously remain unchanged.							
Notice:	Particularly useful when e.g. changing command source temporarily from P0700 = 2. Settings in P0719 (contrary to P0700 settings) do not reset the digital inputs (P0701, P0702, ...)							
r0720	**Number of digital inputs**	-	-	-	-	-	U16	3
	Displays number of digital inputs.							
r0722.0...12	**CO/BO: Digital input values**	-	-	-	-	-	U16	2
	Displays status of digital inputs.							

Bit	Signal name	1 signal	0 signal
00	Digital input 1	Yes	No
01	Digital input 2	Yes	No
02	Digital input 3	Yes	No
03	Digital input 4	Yes	No

Parameter	Function		Range	Factory default	Can be changed	Scaling	Data set	Data type	Acc. Level
	04	Digital input 5				Yes		No	
	05	Digital input 6				Yes		No	
	11	Analog input 1				Yes		No	
	12	Analog input 2				Yes		No	
Note:	Segment is lit when signal is active. The digital input 5 and 6 are provided by the optional I/O Extension Module.								
P0724	**Debounce time for digital inputs**		0 - 3	3	T	-	-	U16	3
	Defines debounce time (filtering time) used for digital inputs.								
	0		No debounce time						
	1		2.5 ms debounce time						
	2		8.2 ms debounce time						
	3		12.3 ms debounce time						
P0727[0...2]	**Selection of 2/3-wire method**		0 - 3	0	C, T	-	CDS	U16	2
	Determines the control method using the terminals. This parameter allows the selection of the control philosophy. The control philosophies exclude each other. 2/3-wire control allows to start, stop and reverse the inverter in one of the following ways: • 2-wire control with Siemens standard control using ON/OFF1 and REV as permanent signals 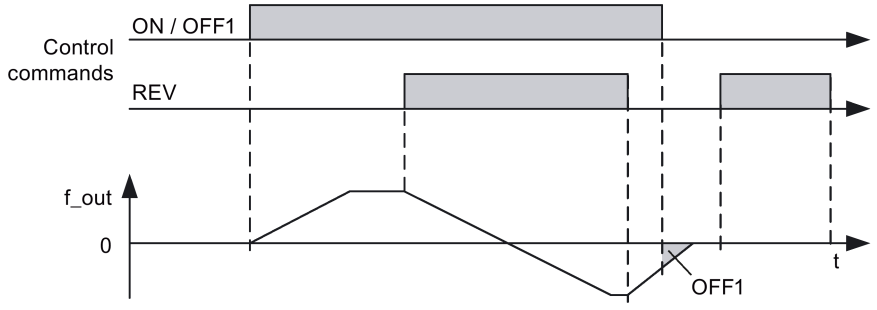 								
	• 2-wire control with Siemens standard control using ON/OFF1 and ON_REV/OFF1 as permanent signals 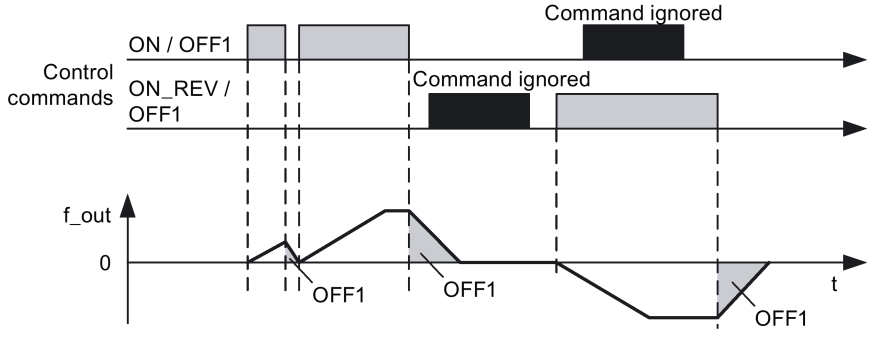 								

Parameter	Function	Range	Factory default	Can be changed	Scaling	Data set	Data type	Acc. Level
	• 2-wire control using ON_FWD and ON_REV as permanent signals 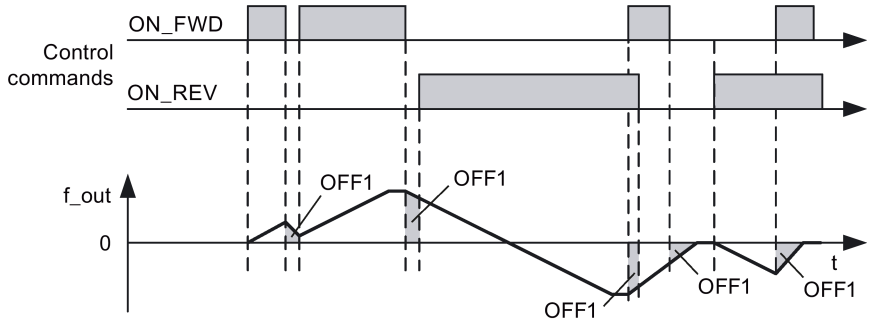							
	• 3-wire control using STOP as permanent signal, FWD and REVP as pulses 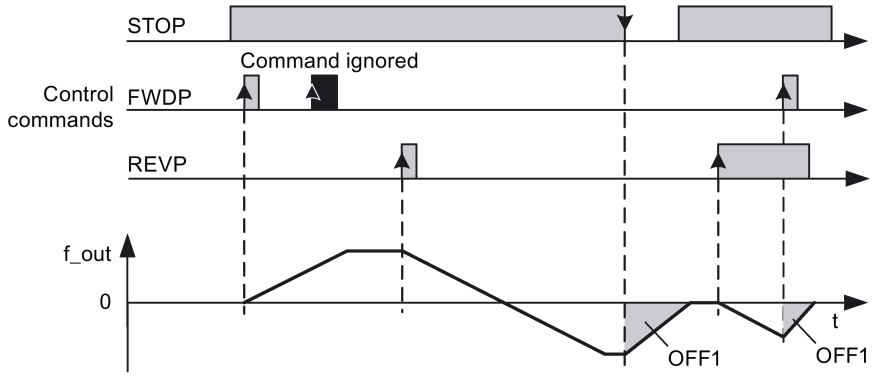							
	• 3 wire control using OFF1/HOLD and REV as permanent signal, ON as pulse signal 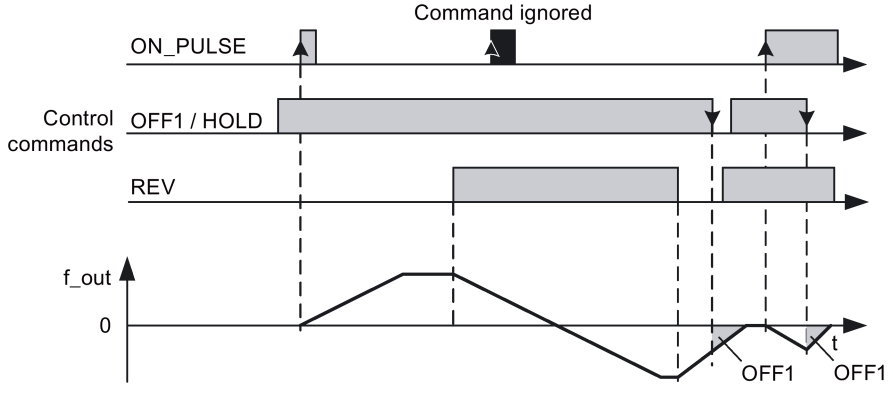							
	0	Siemens (start/dir)						
	1	2-wire (fwd/rev)						
	2	3-wire (fwd/rev)						
	3	3-wire (start/dir)						

Parameter	Function	Range	Factory default	Can be changed	Scaling	Data set	Data type	Acc. Level
Note:	Where: • P denotes Pulse • FWD denotes FORWARD • REV denotes REVERSE When any of the control functions are selected using P0727, the setting for the digital inputs (P0701 - P0704) are redefined as follows:							
	Settings of P0701 - P0706	P0727 = 0 (Siemens Standard Control)		P0727 = 1 (2-wire Control)	P0727 = 2 (3-wire Control)		P0727 = 3 (3-wire Control)	
	= 1 (P0840)	ON/OFF1		ON_FWD	STOP		ON_PULSE	
	= 2 (P0842)	ON_REV/OFF1		ON_REV	FWDP		OFF1/HOLD	
	= 12 (P1113)	REV		REV	REVP		REV	
	To use the 2/3-wire control, the sources for ON/OFF1 (P0840), ON_REV/OFF1 (P0842) and REV (P1113) corresponding to the redefined values have to be set accordingly. The ON/OFF2 functionality is not supported in 2/3 wire modes. Do not select ON/OFF2 unless P0727 = 0.							
	Regarding the use of fixed frequencies see P1000 and P1001.							
r0730	**Number of digital outputs**	-	-	-	-	-	U16	3
	Displays number of digital outputs.							
P0731[0...2]	**BI: Function of digital output 1**	0 - 4294967295	52.3	U, T	-	CDS	U32/ Bin	2
	Defines source of digital output 1.							
Notice:	An inverse logic can be realized by inverting the digital outputs in P0748.							
Note:	Output of fault bit 52.3 is inverted on digital output. Therefore, with P0748 = 0, the digital output is set to low when a fault is triggered, and when there is no fault, it is set to high. Monitor functions ==> see r0052, r0053 Motor holding brake ==> see P1215 DC-Brake ==> see P1232, P1233							
P0732[0...2]	**BI: Function of digital output 2**	0 - 4294967295	52.7	U, T	-	CDS	U32/ Bin	2
	Defines source of digital output 2.							
P0733[0...2]	**BI: Function of digital output 3**	0 - 4294967295	0	U, T	-	CDS	U32/ Bin	2
	Defines source of digital output 3.							
Note:	This digital output is provided by the optional I/O Extension Module.							
P0734[0...2]	**BI: Function of digital output 4**	0 - 4294967295	0	U, T	-	CDS	U32/ Bin	2
	Defines source of digital output 4.							
Note:	This digital output is provided by the optional I/O Extension Module.							

Parameter	Function		Range	Factory default	Can be changed	Scaling	Data set	Data type	Acc. Level
r0747.0...1	**CO/BO: State of digital outputs**		-	-	-	-	-	U16	3
	Displays status of digital outputs (also includes inversion of digital outputs via P0748).								
	Bit	**Signal name**				**1 signal**		**0 signal**	
	00	Digital output 1 energized				Yes		No	
	01	Digital output 2 energized				Yes		No	
	02	Digital output 3 energized				Yes		No	
	03	Digital output 4 energized				Yes		No	
Dependency:	Bit = 0 signal: Contacts open Bit = 1 signal: Contacts closed								
Note:	The digital output 3 and 4 are provided by the optional I/O Extension Module.								
P0748	**Invert digital outputs**		-	0000 bin	U, T	-	-	U16	3
	Defines high and low states of digital output for a given function.								
	Bit	**Signal name**				**1 signal**		**0 signal**	
	00	Invert digital output 1				Yes		No	
	01	Invert digital output 2				Yes		No	
	02	Invert digital output 3				Yes		No	
	03	Invert digital output 4				Yes		No	
Note:	The digital output 3 and 4 are provided by the optional I/O Extension Module.								
r0750	**Number of analog inputs**		-	-	-	-	-	U16	3
	Displays number of analog inputs available.								
r0751.0...9	**CO/BO: Status word of analog input**		-	-	-	-	-	U16	3
	Displays status of analog input.								
	Bit	**Signal name**				**1 signal**		**0 signal**	
	00	Signal lost on analog input 1				Yes		No	
	01	Signal lost on analog input 2				Yes		No	
	08	No signal lost on analog input 1				Yes		No	
	09	No signal lost on analog input 2				Yes		No	
r0752[0...1]	**Actual analog input [V] or [mA]**		-	-	-	-	-	Float	2
	Displays smoothed analog input value in volts or milliamps before the scaling block.								
Index:	[0]		Analog input 1 (AI1)						
	[1]		Analog input 2 (AI2)						
P0753[0...1]	**Smooth time analog input [ms]**		0 - 10000	3	U, T	-	-	U16	3
	Defines filter time (PT1 filter) for analog input.								
Index:	See r0752								
Note:	Increasing this time (smooth) reduces jitter but slows down response to the analog input. P0753 = 0: No filtering								

Parameter	Function	Range	Factory default	Can be changed	Scaling	Data set	Data type	Acc. Level
r0754[0...1]	**Actual analog input value after scaling [%]**	-	-	-	-	-	Float	2
	Shows smoothed value of analog input after scaling block.							
Index:	See r0752							
Dependency:	P0757 to P0760 define range (analog input scaling).							
r0755[0...1]	**CO: Actual analog input after scaling [4000h]**	-	-	-	4000H	-	I16	2
	Displays analog input, scaled using ASPmin and ASPmax (ASP = analog setpoint). Analog setpoint (ASP) from the analog scaling block can vary from minimum analog setpoint (ASPmin) to a maximum analog setpoint (ASPmax). The largest magnitude (value without sign) of ASPmin and ASPmax defines the scaling of 16384. By associating r0755 with an internal value (e.g. frequency setpoint), a scaled value is calculated internally by the inverter. The frequency value is calculated using the following equation: r0755 [Hz] = (r0755 [hex]/4000 [hex]) * P2000 * (max (|ASP_max|, |ASP_min|)/100%)							
Example:	Case a: ASPmin = 300 %, ASPmax = 100 % then 16384 represents 300 %. This parameter will vary from 5461 to 16384. Case b: ASPmin = -200 %, ASPmax = 100 % then 16384 represents 200 %. This parameter will vary from -16384 to +8192. 4000 h = max ($\|ASP_{max}\|$, $\|ASP_{min}\|$) 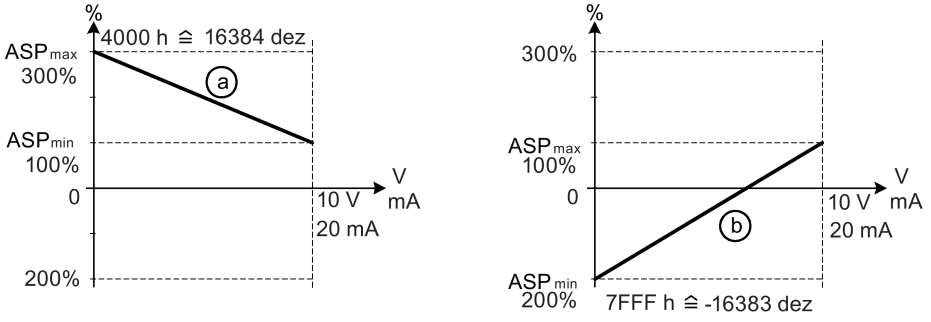							
Index:	See r0752							
Note:	This value is used as an input to analog BICO connectors. ASPmax represents the highest analog setpoint (this may be at 10 V). ASPmin represents the lowest analog setpoint (this may be at 0 V). See P0757 to P0760 (analog input scaling).							
P0756[0...1]	**Type of analog input**	0 - 4	0	T	-	-	U16	2
	Defines type of analog input and also enables analog input monitoring.							
	0	Unipolar voltage input (0 to 10 V)						
	1	Unipolar voltage input with monitoring (0 to 10 V)						
	2	Unipolar current input (0 to 20 mA)						
	3	Unipolar current input with monitoring (0 to 20 mA)						
	4	Bipolar voltage input (-10 V to 10 V)						

Parameter	Function	Range	Factory default	Can be changed	Scaling	Data set	Data type	Acc. Level
Index:	See r0752							
Dependency:	The monitoring function is disabled if the analog scaling block is programmed to output negative setpoints (see P0757 to P0760).							
Notice:	When monitoring is enabled and a deadband defined (P0761), a fault condition will be generated (F80) if the analog input voltage falls below 50 % of the deadband voltage. It is not possible to select the bipolar voltage for analog input 2. For P0756 = 4, you need to ensure the analog input scaling, for example, if you desire to obtain an output frequency within the range of -50 Hz to 50 Hz, you can set parameters P0757 to P0760 within their negative ranges (examples: P0757 = -10 V, P0758 = -100%).							
Note:	See P0757 to P0760 (analog input scaling). In current mode, if the input exceeds 24mA, the inverter will trip F80/11 for analog input 1 and F80/12 for analog input 2. This will result in channel switching back to voltage mode. Analog input parameter readings for the channel concerned will no longer be updated until the fault (F80) has been reset. Once the fault has been reset then the input will switch back to current mode and normal readings will resume.							
P0757[0...1]	**Value x1 of analog input scaling**	-20 - 20	0	U, T	-	-	Float	2
	P0757 - P0760 configure the input scaling. x1 is the first value of the two pairs of variants x1/y1 and x2/y2 which determine the straight line. The value x2 of analog input scaling P0759 must be greater than the value x1 of analog input scaling P0757.							
Index:	See r0752							
Notice:	• Analog setpoints represent a [%] of the normalized frequency in P2000. • Analog setpoints may be larger than 100 %. • ASPmax represents highest analog setpoint (this may be at 10 V or 20 mA). • ASPmin represents lowest analog setpoint (this may be at 0 V or 20 mA). • Default values provide a scaling of 0 V or 0 mA = 0 %, and 10 V or 20 mA = 100 %.							
P0758[0...1]	**Value y1 of analog input scaling [%]**	-99999.9 - 99999.9	0.0	U, T	-	-	Float	2
	Sets value of y1 as described in P0757 (analog input scaling)							
Index:	See r0752							
Dependency:	Affects P2000 to P2003 (reference frequency, voltage, current or torque) depending on which setpoint is to be generated.							
P0759[0...1]	**Value x2 of analog input scaling**	-20 - 20	10	U, T	-	-	Float	2
	Sets value of x2 as described in P0757 (analog input scaling).							
Index:	See r0752							
Notice:	The value x2 of analog input scaling P0759 must be greater than the value x1 of analog input scaling P0757.							
P0760[0...1]	**Value y2 of analog input scaling [%]**	-99999.9 - 99999.9	100.0	U, T	-	-	Float	2
	Sets value of y2 as described in P0757 (analog input scaling).							
Index:	See r0752							
Dependency:	See P0758							
P0761[0...1]	**Width of analog input deadband**	0 - 20	0	U, T	-	-	Float	2
	Defines width of deadband on analog input.							

Parameter	Function	Range	Factory default	Can be changed	Scaling	Data set	Data type	Acc. Level
Example:	The following example produces a 2 V to 10 V, 0 Hz to 50 Hz analog input (analog input value 2 V to 10 V, 0 Hz to 50 Hz): • P2000 = 50 Hz • P0759 = 8.75 V P0760 = 75 % • P0757 = 1.25 V P0758 = -75 % • P0761 = 0.1 V • P0756 = 0 or 1 The following example produces a 0 V to 10 V analog input (-50 Hz to +50 Hz) with center zero and a "holding point" 0.2 V wide (0.1 V to each side of center, analog input value 0 V to 10 V, -50 Hz to +50 Hz): • P2000 = 50 Hz • P0759 = 8 V P0760 = 75 % • P0757 = 2 V P0758 = -75 % • P0761 = 0.1 V • P0756 = 0 or 1							
Index:	See r0752							
Notice:	Deadband starts from 0 V to value of P0761, if both values of P0758 and P0760 (y coordinates of analog input scaling) are positive or negative respectively. However, deadband is active in both directions from point of intersection (x axis with analog input scaling curve), if sign of P0758 and P0760 are opposite.							
Note:	P0761[x] = 0: No deadband active. Minimum frequency P1080 should be zero when using center zero setup. There is no hysteresis at the end of the deadband.							
P0762[0...1]	**Delay for loss of signal action [ms]**	0 - 10000	10	U, T	-	-	U16	3
	Defines time delay between loss of analog setpoint and appearance of fault code F80.							
Index:	See r0752							
Note:	Expert users can choose the desired reaction to F80 (default is OFF2).							
r0770	**Number of analog output**	-	-	-	-	-	U16	3
	Displays number of analog outputs available.							
P0771[0]	**CI: Analog output**	0 - 4294967295	21[0]	U, T	-	-	U32	2
	Defines function of the analog output.							
Index:	[0]	Analog output 1 (AO1)						
Setting:	21	CO: Actual frequency (scaled to P2000)						
	24	CO: Actual output frequency (scaled to P2000)						
	25	CO: Actual output voltage (scaled to P2001)						
	26	CO: Actual DC-link voltage (scaled to P2001)						
	27	CO: Actual output current (scaled to P2002)						
P0773[0]	**Smooth time analog output [ms]**	0 - 1000	2	U, T	-	-	U16	2
	Defines smoothing time for analog output signal. This parameter enables smoothing for analog output using a PT1 filter.							
Index:	See P0771							
Dependency:	P0773 = 0: Deactivates filter.							

Parameter	Function	Range	Factory default	Can be changed	Scaling	Data set	Data type	Acc. Level
r0774[0]	**Actual analog output value [V] or [mA]**	-	-	-	-	-	Float	2
	Shows value of analog output after filtering and scaling.							
Index:	See P0771							
Note:	The analog output is only a current output. By connecting an external resistor of 500 Ω to the terminals (4/5) a voltage output with a range of 0 V to 10 V can be created.							
P0775[0]	**Permit absolute value**	0 - 1	0	T	-	-	U16	2
	Decides if the absolute value of the analog output is used. If enabled, this parameter will take the absolute value to be outputed. If the value was originally negative then the corresponding bit in r0785 is set, otherwise it is cleared.							
Index:	See P0771							
P0777[0]	**Value x1 of analog output scaling [%]**	-99999 - 99999	0.0	U, T	-	-	Float	2
	Defines x1 output characteristic. Scaling block is responsible for adjustment of output value defined in P0771 (analog output connector input). x1 is the first value of the two pairs of variants x1/y1 and x2/y2 which determine the straight line. The two points P1 (x1, y1) and P2 (x2, y2) can be chosen freely.							
Note:	See P0771							
Dependency:	See P0758							
P0778[0]	**Value y1 of analog output scaling**	0 - 20	0	U, T	-	-	Float	2
	Defines y1 of output characteristic.							
Index:	See P0771							
P0779[0]	**Value x2 of analog output scaling [%]**	-99999 - 99999	100.0	U, T	-	-	Float	2
	Defines x2 of output characteristic.							
Index:	See P0771							
Dependency:	See P0758							
P0780[0]	**Value y2 of analog output scaling**	0 - 20	20	U, T	-	-	Float	2
	Defines y2 of output characteristic.							
Index:	See P0771							
P0781[0]	**Width of analog output deadband**	0 - 20	0	U, T	-	-	Float	2
	Sets width of dead-band for analog output.							
Index:	See P0771							
r0785.0	**CO/BO: Status word of analog output**	-	-	-	-	-	U16	2
	Displays status of analog output. Bit 0 indicates that the value of analog output 1 is negative.							
	Bit	**Signal name**			**1 signal**		**0 signal**	
	00	Analog output 1 negative			Yes		No	

Parameter	Function	Range	Factory default	Can be changed	Scaling	Data set	Data type	Acc. Level
P0802	**Transfer data from EEPROM**	0 - 2	0	C(30)	-	-	U16	3
	Transfers values from the inverter to external device when P0802 ≠ 0. P0010 must be set to 30 for this to be possible.							
	0	Disabled						
	2	Start data transfer to the SD card						
Note:	Parameter is automatically reset to 0 (default) after transfer. P0010 will be reset to 0 on successful completion. Ensure that enough space exists on the SD card before transferring data (8 KB).							
P0803	**Transfer data to EEPROM**	0 - 3	0	C(30)	-	-	U16	3
	0	Disabled						
	2	Start data transfer from the SD card						
	3	Start data transfer from the SD card (except the motor data)						
	Transfers parameter values from the SD clone file to the inverter when P0803 ≠ 0. P0010 must be set to 30 to activate this parameter. See P0802 for parameter values.							
Note:	Parameter is automatically reset to 0 (default) after transfer. P0010 will be reset to 0 on successful completion.							
P0804	**Select Clone file**	0 - 99	0	C(30)	-	-	U16	3
	Select clone file to upload/download. if P0804 = 0, then the file name is clone00.bin if P0804 = 1, then the file name is clone01.bin etc.							
P0806	**BI: Inhibit panel access**	0 - 4294967295	0	U, T	-	-	U32	3
	Binector input to lock control panel access through external client.							
r0807.0	**BO: Displays client access**	-	-	-	-	-	U16	3
	Binector output to display whether command and setpoint source is connected to an external client.							
	Bit	**Signal name**			**1 signal**		**0 signal**	
	00	Master control active			Yes		No	
P0809[0...2]	**Copy command data set (CDS)**	0 - 2	[0] 0 [1] 1 [2] 0	T	-	-	U16	2
	Calls 'Copy command data set (CDS)' function. The list of all command data sets (CDS) parameters is shown in "Index" at the end of the manual.							
Example:	Copying of all values from CDS0 to CDS2 can be accomplished by the following procedure: P0809[0] = 0 Copy from CDS0 P0809[1] = 2 Copy to CDS2 P0809[2] = 1 Start copy							
Index:	[0]	Copy from CDS						
	[1]	Copy to CDS						
	[2]	Start copy						
Note:	Start value in index 2 is automatically reset to '0' after execution of function.							

Parameter	Function	Range	Factory default	Can be changed	Scaling	Data set	Data type	Acc. Level
P0810	**BI: command data set bit 0 (Hand/Auto)**	0 - 4294967295	0	U, T	-	-	U32	2
	Selects command source from which to read Bit 0 for selecting a command data set (CDS). The actual selected CDS is displayed in r0054.15 (CDS bit 0) and r0055.15 (CDS bit 1). The actual active CDS is displayed in r0050.							
Setting:	722.0	Digital input 1 (requires P0701 to be set to 99, BICO)						
	722.1	Digital input 2 (requires P0702 to be set to 99, BICO)						
	722.2	Digital input 3 (requires P0703 to be set to 99, BICO)						
Note:	P0811 is also relevant for command data set (CDS) selection.							
P0811	**BI: command data set bit 1**	0 - 4294967295	0	U, T	-	-	U32	2
	Selects command source from which to read Bit 1 for selecting a command data set (see P0810).							
Setting:	See P0810.							
Note:	P0810 is also relevant for command data set (CDS) selection.							
P0819[0...2]	**Copy inverter data set (DDS)**	0 - 2	[0] 0 [1] 1 [2] 0	T	-	-	U16	2
	Calls 'Copy inverter data set (DDS)' function. The list of all inverter data set (DDS) parameters is shown in "Index" at the end of the manual.							
Example:	Copying of all values from DDS0 to DDS2 can be accomplished by the following procedure: P0819[0] = 0 Copy from DDS0 P0819[1] = 2 Copy to DDS2 P0819[2] = 1 Start copy							
Index:	[0]	Copy from DDS						
	[1]	Copy to DDS						
	[2]	Start copy						
Note:	See P0809							
P0820	**BI: inverter data set bit 0**	0 - 4294967295	0	T	-	-	U32	3
	Selects command source from which to read Bit 0 for selecting an inverter data set (DDS). The actual selected inverter data set (DDS) is displayed in parameter r0051[0]. The actual active inverter data set (DDS) is displayed in parameter r0051[1].							
Setting:	See P0810							
Note:	P0821 is also relevant for inverter data set (DDS) selection.							
P0821	**BI: inverter data set bit 1**	0 - 4294967295	0	T	-	-	U32	3
	Selects command source from which Bit 1 for selecting an inverter data set is to be read in (see P0820).							
Setting:	See P0810							
Note:	P0820 is also relevant for inverter data set (DDS) selection.							
P0840[0...2]	**BI: ON/OFF1**	0 - 4294967295	19.0	T	-	CDS	U32	3
	Allows ON/OFF1 command source to be selected using BICO. The digits in front of the colon show the parameter number of the command source; the digits following the colon denote the bit setting for that parameter.							
Setting:	See P0810							
Dependency:	For digital inputs as command source BICO requires P0700 set to 2 (enable BICO). The default setting (ON right) is digital input 1 (722.0). Alternative source possible only when function of digital input 1 is changed (via P0701) before changing value of P0840.							

Parameter	Function	Range	Factory default	Can be changed	Scaling	Data set	Data type	Acc. Level
P0842[0...2]	**BI: ON reverse/OFF1**	0 - 4294967295	0	T	-	CDS	U32	3
	Allows ON/OFF1 reverse command source to be selected using BICO. In general a positive frequency setpoint is run up counterclockwise (negative frequency).							
Setting:	See P0810							
P0843[0...2]	BI: ON/OFF2	0 - 4294967295	1	T	-	CDS	U32/Bin	3
	Allows ON/OFF2 command source to be selected using BICO. The default setting 1.0 will disable this parameter.							
Setting:	See P0810							
Dependency:	For digital inputs as command source BICO requires P0700 set to 2 (enable BICO). If one of the digital inputs is selected for ON/OFF2, the inverter will not run unless the digital input is active. OFF2 means immediate pulse-disabling; the motor is coasting. OFF2 is low-active, i.e. :0 = Pulse disabling. 1 = Pulses enabled. (As long as there are no other OFF conditions active).							
Note:	The ON/OFF2 functionality is not supported in 2/3 wire modes. Do not select ON/OFF2 unless P0727 = 0.							
P0844[0...2]	**BI: 1. OFF2**	0 - 4294967295	19.1	T	-	CDS	U32	3
	Defines first source of OFF2 when P0719 = 0 (BICO).							
Setting:	See P0810							
Dependency:	If one of the digital inputs is selected for OFF2, the inverter will not run unless the digital input is active.							
Note:	OFF2 means immediate pulse-disabling; the motor is coasting. OFF2 is low-active, i.e.: 0 = Pulse disabling. 1 = Operating condition.							
P0845[0...2]	**BI: 2. OFF2**	0 - 4294967295	1	T	-	CDS	U32	3
	Defines second source of OFF2.							
Setting:	See P0810							
Dependency:	In contrast to P0844 (first source of OFF2), this parameter is always active, independent of P0719 (selection of command and frequency setpoint). See P0844.							
Note:	See P0844							
P0848[0...2]	**BI: 1. OFF3**	0 - 4294967295	1	T	-	CDS	U32	3
	Defines first source of OFF3 when P0719 = 0 (BICO).							
Setting:	See P0810							
Dependency:	If one of the digital inputs is selected for OFF3, the inverter will not run unless the digital input is active.							
Note:	OFF3 means quick ramp-down to 0. OFF3 is low-active, i.e. 0 = Quick ramp-down. 1 = Operating condition.							
P0849[0...2]	**BI: 2. OFF3**	0 - 4294967295	1	T	-	CDS	U32	3
	Defines second source of OFF3.							
Setting:	See P0810							
Dependency:	In contrast to P0848 (first source of OFF3), this parameter is always active, independent of P0719 (selection of command and frequency setpoint). See P0848.							
Note:	See P0848							

Parameter	Function	Range	Factory default	Can be changed	Scaling	Data set	Data type	Acc. Level
P0852[0...2]	**BI: Pulse enable**	0 - 4294967295	1	T	-	CDS	U32	3
	Defines source of pulse enable/disable signal.							
Setting:	See P0810							
Dependency:	Active only when P0719 = 0 (Auto selection of command/setpoint source).							
P0881[0...2]	**BI: Quick stop source 1**	0 - 4294967295	1	T	-	CDS	U32	3
	Allows quick stop source 1 command to be selected using BICO. The signal is expected to be active low (default setting P0886 = 2).							
Setting:	See P0810							
P0882[0...2]	**BI: Quick stop source 2**	0 - 4294967295	1	T	-	CDS	U32	3
	Allows quick stop source 2 command to be selected using BICO. The signal is expected to be active low (default setting P0886 = 2).							
Setting:	See P0810							
P0883[0...2]	**BI: Quick stop override**	0 - 4294967295	0	T	-	CDS	U32	3
	Allows quick stop override command source to be selected using BICO. The signal is expected to be active high.							
Setting:	See P0810							
P0886[0...2]	**Quick stop input type**	0 - 4	2	T	-	CDS	U16	3
	Control Word for selecting the quick stop input type.							
	0	Quick stop not selected						
	1	Quick stop input active high						
	2	Quick stop input active low						
	3	Quick stop input positive edge triggered						
	4	Quick stop input negative edge triggered						
P0927	**Parameter changeable via specified interfaces**	0 - 31	31	U, T	-	-	U16	2
	Specifies the interfaces which can be used to change parameters. This parameter allows the user to easily protect the inverter from unauthorized modification of parameters. Annotation: P0927 is not password protected.							
	Bit	**Signal name**			**1 signal**		**0 signal**	
	00	Not used			Yes		No	
	01	BOP (including built-in BOP and external BOP)			Yes		No	
	02	USS on RS232			Yes		No	
	03	USS on RS485			Yes		No	
	04	Script terminal on RS485			Yes		No	
Example:	Default: All bits are set. The default setting allows parameters to be changed via any interface.							
r0944	**Total number of messages**	-	-	-	-	-	U16	3
	Displays the total number of messages available.							

Parameter	Function	Range	Factory default	Can be changed	Scaling	Data set	Data type	Acc. Level
r0947[0...63]	**CO: Last fault code**	-	-	-	-	-	U16	2
	Displays fault history. 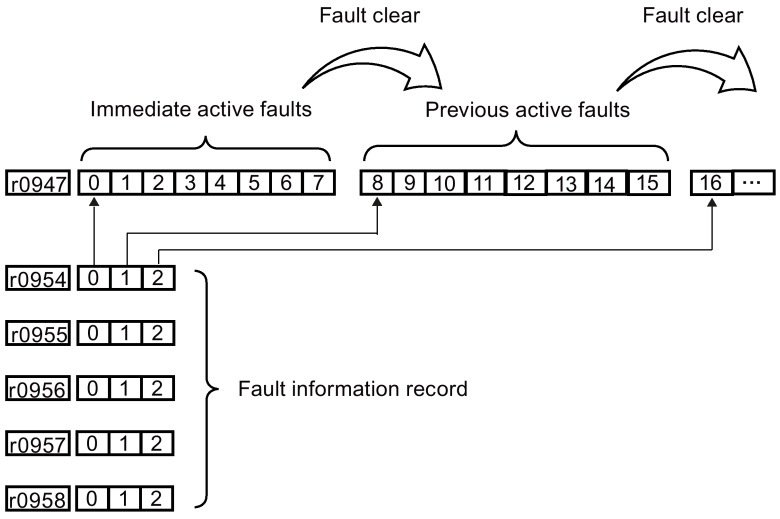 							
Index:	[0]	Recent fault trip --, fault 1						
	...	...						
	[7]	Recent fault trip --, fault 8						
	[8]	Recent fault trip -1, fault 1						
	...	...						
	[15]	Recent fault trip -1, fault 8						
	[16]	Recent fault trip -2, fault 1						
	...	...						
	[23]	Recent fault trip -2, fault 8						
	...	...						
	[63]	Recent fault trip -7, fault 8						
Notice:	It is possible that this parameter is empty but a fault is still indicated by the inverter. The reason for this is most likely due to a SAFE condition still existing in the system. In this situation the fault is cleared from this parameter and it makes no sense to go back to a READY state. First remove the reason for the SAFE condition and then the inverter will be able to change to a READY state (SAFE condition example is "safety function is activated").							
Note:	The function "inverter status at fault" (Page 323) serves as a snapshot record in time of the relative parameters being monitored at the point of a fault occurring. Some recorded parameters are filtered values. Therefore if a hardware trip occurs, (r0949 = 0), some filtered values may not appear to reflect those values which caused the trip.							
Example:	If a hardware overvoltage trip occurs, (r0947 = 2 and r0949 = 0), the value of the filtered DC link voltage in r0956 may appear to be under the trip limit. In this case, the filtered DC link value had not had enough time to rise to the trip level; however, the actual limit had been exceeded and hence the hardware had tripped to protect itself.							

Parameter	Function	Range	Factory default	Can be changed	Scaling	Data set	Data type	Acc. Level
r0948[0...63]	**Fault time**	-	-	-	-	-	U32	3
	Time stamp to indicate when a fault has occurred. P0969 (system run time counter) is the possible source of the time stamp.							
Index:	[0]	Recent fault trip --, fault time 1						
	...	...						
	[7]	Recent fault trip --, fault time 8						
	[8]	Recent fault trip -1, fault time 1						
	...	...						
	[15]	Recent fault trip -1, fault time 8						
	[16]	Recent fault trip -2, fault time 1						
	...	...						
	[23]	Recent fault trip -2, fault time 8						
	...	...						
	[63]	Recent fault trip -7, fault time 8						
r0949[0...63]	**CO: Fault value**	-	-	-	-	-	U32	3
	Displays inverter fault values. It is for service purposes and indicates the type of fault reported. The values are not documented. They are listed in the code where faults are reported.							
Index:	[0]	Recent fault trip --, fault value 1						
	...	...						
	[7]	Recent fault trip --, fault value 8						
	[8]	Recent fault trip -1, fault value 1						
	...	...						
	[15]	Recent fault trip -1, fault value 8						
	[16]	Recent fault trip -2, fault value 1						
	...	...						
	[23]	Recent fault trip -2, fault value 8						
	...	...						
	[63]	Recent fault trip -7, fault value 8						
P0952	**Total number of trips**	0 - 65535	0	T	-	-	U16	3
	Displays number of trips stored in r0947 (last fault code).							
Dependency:	Setting 0 resets fault history (changing to 0 also resets r0948 - fault time).							
Note:	If the source of a non-momentary fault remains active before a factory reset, the inverter removes the source first and then places the fault into the fault history during a factory reset. That means P0952 still has a non-zero value after the factory reset. If you want to clear the fault history, you need to perform a second factory reset or set P0952 = 0.							
r0954[0...2]	**CO: Freq. setpoint after RFG at fault [Hz]**	-	-	-	-	-	Float	3
	Displays the setpoint after RFG when the first instantaneous fault occurs (see r1170).							
Index:	[0]	Recent trip - Fault information						
	[1]	Recent trip - 1 Fault information						
	[2]	Recent trip - 2 Fault information						
Note:	Only one set of fault information is stored per block of instantaneous faults. r0954[0] corresponds to r0947[0...7], r0954[1] corresponds to r0947[8...15] and r0954[2] corresponds to r0947[16...23].							

Parameter	Function	Range	Factory default	Can be changed	Scaling	Data set	Data type	Acc. Level
r0955[0...2]	**CO/BO: Status word 2 at fault**	-	-	-	-	-	U16	3
	Displays status word 2 when the first instantaneous fault occurs (see r0053).							
Index:	[0]	Recent trip - Fault information						
	[1]	Recent trip - 1 Fault information						
	[2]	Recent trip - 2 Fault information						
Note:	Only one set of fault information is stored per block of instantaneous faults. r0955[0] corresponds to r0947[0...7], r0955[1] corresponds to r0947[8...15] and r0955[2] corresponds to r0947[16...23].							
r0956[0...2]	**CO: DC-link voltage at fault [V]**	-	-	-	-	-	Float	3
	Displays the DC link voltage when the first instantaneous fault occurs (see r0026).							
Index:	[0]	Recent trip - Fault information						
	[1]	Recent trip - 1 Fault information						
	[2]	Recent trip - 2 Fault information						
Note:	Only one set of fault information is stored per block of instantaneous faults. r0956[0] corresponds to r0947[0...7], r0956[1] corresponds to r0947[8...15] and r0956[2] corresponds to r0947[16...23].							
r0957[0...2]	**CO: Act. output current at fault [A]**	-	-	-	-	-	Float	3
	Displays the output current RMS when the first instantaneous fault occurs (see r0027).							
Index:	[0]	Recent trip - Fault information						
	[1]	Recent trip - 1 Fault information						
	[2]	Recent trip - 2 Fault information						
Note:	Only one set of fault information is stored per block of instantaneous faults. r0957[0] corresponds to r0947[0...7], r0957[1] corresponds to r0947[8...15] and r0957[2] corresponds to r0947[16...23].							
r0958[0...2]	**CO: Act. output voltage at fault [V]**	-	-	-	-	-	Float	3
	Displays the output voltage when the first instantaneous fault occurs (see r0025).							
Index:	[0]	Recent trip - Fault information						
	[1]	Recent trip - 1 Fault information						
	[2]	Recent trip - 2 Fault information						
Note:	Only one set of fault information is stored per block of instantaneous faults. r0958[0] corresponds to r0947[0...7], r0958[1] corresponds to r0947[8...15] and r0958[2] corresponds to r0947[16...23].							
r0964[0...6]	**Firmware version data**	-	-	-	-	-	U16	3
	Firmware version data.							
Index:	[0]	Company (Siemens = 42)						
	[1]	Product type (V20 = 8001)						
	[2]	Firmware version						
	[3]	Firmware date (year)						
	[4]	Firmware date (day/month)						
	[5]	Number of inverter objects						
	[6]	Firmware version						
r0967	**Control word 1**	-	-	-	-	-	U16	3
	Displays control word 1. See r0054 for the bit field description.							

Parameter	Function	Range	Factory default	Can be changed	Scaling	Data set	Data type	Acc. Level
r0968	**Status word 1**	-	-	-	-	-	U16	3
	Displays active status word of inverter (in binary) and can be used to diagnose which commands are active. See r0052 for the bit field description.							
P0969	**Resettable system run time counter**	0 - 4294967295	0	T	-	-	U32	3
	Resettable system run time counter.							
P0970	**Factory reset**	0 - 21	0	C(30)	-	-	U16	1
	P0970 = 1 resets all parameters (not user defaults) to their default values. P0970 = 21 resets all parameters and all user defaults to Factory Reset state. When resetting all parameters by setting P0970 = 1 or P0970 = 21, please note the following aspects: • When you reset parameters through the BOP, parameters in both RAM and EEPROM are reset. • When you select USS/MODBUS communication on RS485 and the volatile storage mode (P0014[0] = 0), only parameters in RAM are reset. • When you select USS/MODBUS communication on RS485 and the non-volatile storage mode (P0014[0] =1), parameters in both RAM and EEPROM are reset.							
	0	Disabled						
	1	Parameter reset						
	21	User Default Parameter Reset						
Dependency:	First set P0010 = 30 (factory settings). Stop inverter (i.e. disable all pulses) before you can reset parameters to default values.							
Note:	The following parameters retain their values after a factory reset: • r0039 CO: Energy consumption meter [kWh] • P0014 Store mode • P0100 Europe/North America • P0205 Inverter application • P2010 USS/MODBUS baudrate • P2011 USS address • P2021 MODBUS address • P2023 RS485 protocol selection • P8458 Clone control When transferring P0970, the inverter uses its processor to carry out internal calculations. Communications are interrupted for the time that it takes to make these calculations.							
P0971	**Transfer data from RAM to EEPROM**	0 - 21	0	U, T	-	-	U16	3
	Transfers values from RAM to EEPROM when set to 1. Transfers new user default values from RAM to EEPROM when set to 21.							
	0	Disabled						
	1	Start transfer						
	21	Start User Defaults transfer						
Note:	All values in RAM are transferred to EEPROM. Parameter is automatically reset to 0 (default) after successful transfer. The storage from RAM to EEPROM is accomplished via P0971. The communications are reset, if the transfer was successful. During the reset process communications will be interrupted. • BOP displays 88888 After completion of the transfer process, the communication between the inverter and external peripherals (BOP, USS or Modbus Master) is automatically re-established.							

Parameter	Function	Range	Factory default	Can be changed	Scaling	Data set	Data type	Acc. Level
r0980[0...99]	**List of available parameter numbers**	0 - 65535	981	-	-	-	U16	4
	Contains 100 parameter numbers index 0 - 99.							
Index:	[0]	Parameter 1						
	[1]	Parameter 2						
	...	...						
	[98]	Parameter 99						
	[99]	Next parameter list						
Note:	The parameter list array has 2 elements to reduce memory consumption. On each access to an element index 0 - 99, the individual result is determined dynamically by the 'BeforeAccess' function. The last element contains the number of the following parameter array, 0 indicates end of list.							
r0981[0...99]	**List of available parameter numbers**	0 - 65535	982	-	-	-	U16	4
	Contains 100 parameter numbers index 100 - 199.							
Index:	See r0980							
Note:	See r0980							
r0982[0...99]	**List of available parameter numbers**	0 - 65535	983	-	-	-	U16	4
	Contains 100 parameter numbers index 200 - 299.							
Index:	See r0980							
Note:	See r0980							
r0983[0...99]	**List of available parameter numbers**	0 - 65535	984	-	-	-	U16	4
	Contains 100 parameter numbers index 300 - 399.							
Index:	See r0980							
Note:	See r0980							
r0984[0...99]	**List of available parameter numbers**	0 - 65535	985	-	-	-	U16	4
	Contains 100 parameter numbers index 400 - 499.							
Index:	See r0980							
Note:	See r0980							
r0985[0...99]	**List of available parameter numbers**	0 - 65535	986	-	-	-	U16	4
	Contains 100 parameter numbers index 500 - 599.							
Index:	See r0980							
Note:	See r0980							
r0986[0...99]	**List of available parameter numbers**	0 - 65535	987	-	-	-	U16	4
	Contains 100 parameter numbers index 600 - 699.							
Index:	See r0980							
Note:	See r0980							
r0987[0...99]	**List of available parameter numbers**	0 - 65535	988	-	-	-	U16	4
	Contains 100 parameter numbers index 700 - 799.							
Index:	See r0980							
Note:	See r0980							
r0988[0...99]	**List of available parameter numbers**	0 - 65535	989	-	-	-	U16	4
	Contains 100 parameter numbers index 800 - 899.							
Index:	See r0980							
Note:	See r0980							

Parameter	Function	Range	Factory default	Can be changed	Scaling	Data set	Data type	Acc. Level
r0989[0...99]	**List of available parameter numbers**	0 - 65535	0	-	-	-	U16	4
	Contains 100 parameter numbers index 900 - 999.							
Index:	See r0980							
Note:	See r0980							
P1000[0...2]	**Selection of frequency setpoint**	0 - 77	1	C, T	-	CDS	U16	1
	Selects frequency setpoint source. The main setpoint is given by the least significant digit (right-hand position) and the additional setpoint is given by the most significant digit (left-hand position). Single digits denote main setpoints that have no additional setpoint. 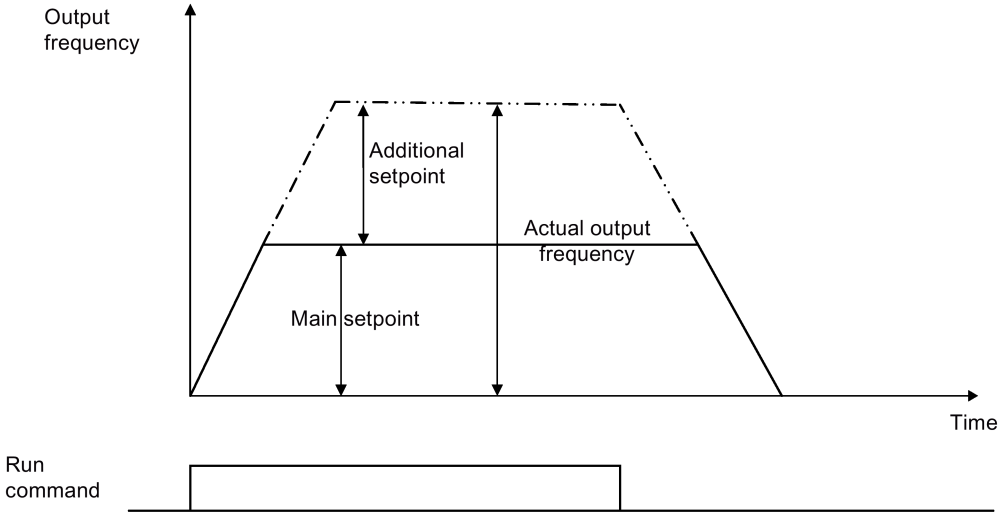 							
	0	No main setpoint						
	1	MOP setpoint						
	2	Analog setpoint						
	3	Fixed frequency						
	5	USS/MODBUS on RS485						
	7	Analog setpoint 2						
	10	No main setpoint + MOP setpoint						
	11	MOP setpoint + MOP setpoint						
	12	Analog setpoint + MOP setpoint						
	13	Fixed frequency + MOP setpoint						
	15	USS/MODBUS on RS485 + MOP setpoint						
	17	Analog setpoint 2 + MOP setpoint						
	20	No main setpoint + Analog setpoint						
	21	MOP setpoint + Analog setpoint						
	22	Analog setpoint + Analog setpoint						
	23	Fixed frequency + Analog setpoint						
	25	USS/MODBUS on RS485 + Analog setpoint						
	27	Analog setpoint 2 + Analog setpoint						
	30	No main setpoint + Fixed frequency						
	31	MOP setpoint + Fixed frequency						
	32	Analog setpoint + Fixed frequency						

<table>
<tr><th>Parameter</th><th>Function</th><th>Range</th><th>Factory default</th><th>Can be changed</th><th>Scaling</th><th>Data set</th><th>Data type</th><th>Acc. Level</th></tr>
<tr><td></td><td>33</td><td colspan="7">Fixed frequency + Fixed frequency</td></tr>
<tr><td></td><td>35</td><td colspan="7">USS/MODBUS on RS485 + Fixed frequency</td></tr>
<tr><td></td><td>37</td><td colspan="7">Analog setpoint 2 + Fixed frequency</td></tr>
<tr><td></td><td>50</td><td colspan="7">No main setpoint + USS/MODBUS on RS485</td></tr>
<tr><td></td><td>51</td><td colspan="7">MOP setpoint + USS/MODBUS on RS485</td></tr>
<tr><td></td><td>52</td><td colspan="7">Analog setpoint + USS/MODBUS on RS485</td></tr>
<tr><td></td><td>53</td><td colspan="7">Fixed frequency + USS/MODBUS on RS485</td></tr>
<tr><td></td><td>55</td><td colspan="7">USS/MODBUS on RS485 + USS/MODBUS on RS485</td></tr>
<tr><td></td><td>57</td><td colspan="7">Analog setpoint 2 + USS/MODBUS on RS485</td></tr>
<tr><td></td><td>70</td><td colspan="7">No main setpoint + Analog setpoint 2</td></tr>
<tr><td></td><td>71</td><td colspan="7">MOP setpoint + Analog setpoint 2</td></tr>
<tr><td></td><td>72</td><td colspan="7">Analog setpoint + Analog setpoint 2</td></tr>
<tr><td></td><td>73</td><td colspan="7">Fixed frequency + Analog setpoint 2</td></tr>
<tr><td></td><td>75</td><td colspan="7">USS/MODBUS on RS485 + Analog setpoint 2</td></tr>
<tr><td></td><td>77</td><td colspan="7">Analog setpoint 2 + Analog setpoint 2</td></tr>
<tr><td>Dependency:</td><td colspan="8">Related parameter: P1074 (BI: Disable additional setpoint)</td></tr>
<tr><td>Caution:</td><td colspan="8">Changing this parameter sets (to default) all settings on item selected. These are the following parameters: P1070, P1071, P1075, P1076
If P1000 = 1 or 1X, and P1032 (inhibit reverse direction of MOP) = 1, then reverse motor direction will be inhibited.</td></tr>
<tr><td>Note:</td><td colspan="8">RS485 also supports MODBUS protocol as well as USS. All USS options on RS485 are also applicable to MODBUS. To alter the setpoint using the BOP when the command source P0700 is not set to 1, you must check that P1035 is set to r0019 bit 13 and P1036 is set to r0019 bit 14.</td></tr>
<tr><td>P1001[0...2]</td><td>Fixed frequency 1 [Hz]</td><td>-550.00 - 550.00</td><td>10.00</td><td>U, T</td><td>-</td><td>DDS</td><td>Float</td><td>2</td></tr>
<tr><td></td><td colspan="8">Defines fixed frequency setpoint 1. There are 2 types of fixed frequencies:
• Direct selection (P1016 = 1):
– In this mode of operation 1 Fixed Frequency selector (P1020 to P1023) selects 1 fixed frequency.
– If several inputs are active together, the selected frequencies are summed. E.g.: FF1 + FF2 + FF3 + FF4.
• Binary coded selection (P1016 = 2):
– Up to 16 different fixed frequency values can be selected using this method.
<table>
<tr><th colspan="4">Fixed speed bit</th><th>Binary code</th><th>Fixed frequency (Hz)</th></tr>
<tr><td colspan="4">-</td><td>0</td><td>0</td></tr>
<tr><td></td><td></td><td></td><td>0</td><td>1</td><td>P1001</td></tr>
<tr><td></td><td></td><td>1</td><td></td><td>2</td><td>P1002</td></tr>
<tr><td></td><td></td><td>1</td><td>0</td><td>3</td><td>P1003</td></tr>
<tr><td></td><td>2</td><td></td><td></td><td>4</td><td>P1004</td></tr>
<tr><td></td><td>2</td><td></td><td>0</td><td>5</td><td>P1005</td></tr>
<tr><td></td><td>2</td><td>1</td><td></td><td>6</td><td>P1006</td></tr>
<tr><td></td><td>2</td><td>1</td><td>0</td><td>7</td><td>P1007</td></tr>
<tr><td>3</td><td></td><td></td><td></td><td>8</td><td>P1008</td></tr>
<tr><td>3</td><td></td><td></td><td>0</td><td>9</td><td>P1009</td></tr>
<tr><td>3</td><td></td><td>1</td><td></td><td>10</td><td>P1010</td></tr>
<tr><td>3</td><td></td><td>1</td><td>0</td><td>11</td><td>P1011</td></tr>
<tr><td>3</td><td>2</td><td></td><td></td><td>12</td><td>P1012</td></tr>
<tr><td>3</td><td>2</td><td></td><td>0</td><td>13</td><td>P1013</td></tr>
<tr><td>3</td><td>2</td><td>1</td><td></td><td>14</td><td>P1014</td></tr>
<tr><td>3</td><td>2</td><td>1</td><td>0</td><td>15</td><td>P1015</td></tr>
</table>
See P1020 to P1023 for assigning desired digital inputs to the fixed speed bits.</td></tr>
</table>

Parameter	Function	Range	Factory default	Can be changed	Scaling	Data set	Data type	Acc. Level
Dependency:	Select fixed frequency operation (using P1000). Inverter requires ON command to start in the case of direct selection. Therefore r1025 must be connected to P0840 to start.							
Note:	Fixed frequencies can be selected using the digital inputs.							
P1002[0...2]	**Fixed frequency 2 [Hz]**	-550.00 - 550.00	15.00	U, T	-	DDS	Float	2
	Defines fixed frequency setpoint 2.							
Note:	See P1001							
P1003[0...2]	**Fixed frequency 3 [Hz]**	-550.00 - 550.00	25.00	U, T	-	DDS	Float	2
	Defines fixed frequency setpoint 3.							
Note:	See P1001							
P1004[0...2]	**Fixed frequency 4 [Hz]**	-550.00 - 550.00	50.00	U, T	-	DDS	Float	2
	Defines fixed frequency setpoint 4.							
Note:	See P1001							
P1005[0...2]	**Fixed frequency 5 [Hz]**	-550.00 - 550.00	0.00	U, T	-	DDS	Float	2
	Defines fixed frequency setpoint 5.							
Note:	See P1001							
P1006[0...2]	**Fixed frequency 6 [Hz]**	-550.00 - 550.00	0.00	U, T	-	DDS	Float	2
	Defines fixed frequency setpoint 6.							
Note:	See P1001							
P1007[0...2]	**Fixed frequency 7 [Hz]**	-550.00 - 550.00	0.00	U, T	-	DDS	Float	2
	Defines fixed frequency setpoint 7.							
Note:	See P1001							
P1008[0...2]	**Fixed frequency 8 [Hz]**	-550.00 - 550.00	0.00	U, T	-	DDS	Float	2
	Defines fixed frequency setpoint 8.							
Note:	See P1001							
P1009[0...2]	**Fixed frequency 9 [Hz]**	-550.00 - 550.00	0.00	U, T	-	DDS	Float	2
	Defines fixed frequency setpoint 9.							
Note:	See P1001							

Parameter	Function	Range	Factory default	Can be changed	Scaling	Data set	Data type	Acc. Level
P1010[0...2]	**Fixed frequency 10 [Hz]**	-550.00 - 550.00	0.00	U, T	-	DDS	Float	2
	Defines fixed frequency setpoint 10.							
Note:	See P1001							
P1011[0...2]	**Fixed frequency 11 [Hz]**	-550.00 - 550.00	0.00	U, T	-	DDS	Float	2
	Defines fixed frequency setpoint 11.							
Note:	See P1001							
P1012[0...2]	**Fixed frequency 12 [Hz]**	-550.00 - 550.00	0.00	U, T	-	DDS	Float	2
	Defines fixed frequency setpoint 12.							
Note:	See P1001							
P1013[0...2]	**Fixed frequency 13 [Hz]**	-550.00 - 550.00	0.00	U, T	-	DDS	Float	2
	Defines fixed frequency setpoint 13.							
Note:	See P1001							
P1014[0...2]	**Fixed frequency 14 [Hz]**	-550.00 - 550.00	0.00	U, T	-	DDS	Float	2
	Defines fixed frequency setpoint 14.							
Note:	See P1001							
P1015[0...2]	**Fixed frequency 15 [Hz]**	-550.00 - 550.00	0.00	U, T	-	DDS	Float	2
	Defines fixed frequency setpoint 15.							
Note:	See P1001							
P1016[0...2]	**Fixed frequency mode**	1 - 2	1	T	-	DDS	U16	2
	Fixed frequencies can be selected in two different modes. P1016 defines the mode.							
	1	Direct selection						
	2	Binary selection						
Note:	See P1001 for description of how to use fixed frequencies.							
P1020[0...2]	**BI: Fixed frequency selection Bit 0**	0 - 4294967295	722.3	T	-	CDS	U32	3
	Defines origin of fixed frequency selection.							
Example:	= 722.0	Digital input 1 (requires P0701 to be set to 99, BICO)						
	= 722.1	Digital input 2 (requires P0702 to be set to 99, BICO)						
	= 722.2	Digital input 3 (requires P0703 to be set to 99, BICO)						
	= 722.3	Digital input 4 (requires P0704 to be set to 99, BICO)						
Dependency:	Accessible only if P0701 - P070x = 99 (function of digital inputs = BICO)							
P1021[0...2]	**BI: Fixed frequency selection Bit 1**	0 - 4294967295	722.4	T	-	CDS	U32	3
	See P1020							
P1022[0...2]	**BI: Fixed frequency selection Bit 2**	0 - 4294967295	722.5	T	-	CDS	U32	3
	See P1020							

Parameter	Function	Range	Factory default	Can be changed	Scaling	Data set	Data type	Acc. Level
P1023[0...2]	**BI: Fixed frequency selection Bit 3**	0 - 4294967295	722.6	T	-	CDS	U32	3
	See P1020							
r1024	**CO: Actual fixed frequency [Hz]**	-	-	-	-	-	Float	3
	Displays sum total of selected fixed frequencies.							
r1025.0	**BO: Fixed frequency status**	-	-	-	-	-	U16	3
	Displays the status of fixed frequencies.							
	Bit	**Signal name**			**1 signal**		**0 signal**	
	00	Status of FF			Yes		No	
P1031[0...2]	**MOP mode**	0 - 3	1	U, T	-	DDS	U16	2
	MOP mode specification.							
	Bit	**Signal name**			**1 signal**		**0 signal**	
	00	Setpoint store active			Yes		No	
	01	No On-state for MOP necessary			Yes		No	
Note:	Defines the operation mode of the motorized potentiometer. See P1040.							
P1032	**Inhibit reverse direction of MOP**	0 - 1	1	T	-	-	U16	2
	Inhibits reverse setpoint selection of the MOP.							
	0	Reverse direction is allowed						
	1	Reverse direction inhibited						
Note:	It is possible to change motor direction using the motor potentiometer setpoint (increase/decrease frequency). Setting 0 enables a change of motor direction using the motor potentiometer setpoint (increase/decrease frequency). If P1032 = 1 and P1000 = 1 or 1X, then reverse motor direction will be inhibited.							
P1035[0...2]	**BI: Enable MOP (UP-command)**	0 - 4294967295	19.13	T	-	CDS	U32	3
	Defines source for motor potentiometer setpoint increase frequency.							
Setting:	722.0	Digital input 1 (requires P0701 to be set to 99, BICO)						
	722.1	Digital input 2 (requires P0702 to be set to 99, BICO)						
	722.2	Digital input 3 (requires P0703 to be set to 99, BICO)						
Notice:	If this command is enabled by short pulses of less than 1 second, the frequency is changed in steps of 0.1 Hz. When the signal is enabled longer than 1 second the ramp generator accelerates with the rate of P1047.							
P1036[0...2]	**BI: Enable MOP (DOWN-command)**	0 - 4294967295	19.14	T	-	CDS	U32	3
	Defines source for motor potentiometer setpoint decrease frequency.							
Setting:	See P1035							
Notice:	If this command is enabled by short pulses of less than 1 second, the frequency is changed in steps of 0.1 Hz. When the signal is enabled longer than 1 second the ramp generator decelerates with the rate of P1048.							

Parameter	Function	Range	Factory default	Can be changed	Scaling	Data set	Data type	Acc. Level
P1040[0...2]	**Setpoint of the MOP [Hz]**	-550.00 - 550.00	5.00	U, T	-	DDS	Float	2
	Determines setpoint for motor potentiometer control (P1000 = 1).							
Dependency:	Motor potentiometer (P1040) must be chosen as main setpoint or additional setpoint (using P1000).							
Note:	If motor potentiometer setpoint is selected either as main setpoint or additional setpoint, the reverse direction will be inhibited by default of P1032 (inhibit reverse direction of MOP). To re-enable reverse direction, set P1032 = 0. A short press of the 'up' or 'down' keys (e.g.: operator panel) will change the frequency setpoint in steps of 0.1 Hz. A longer press will cause an accelerated frequency setpoint change. The start value gets active (for the MOP output) only at the start of the MOP. P1031 influences the start value behavior as follows: • P1031 = 0: Last MOP setpoint not saved in P1040 MOP UP/DOWN requires an ON command to become active. • P1031 = 1: Last MOP setpoint saved in P1040 on every OFF MOP UP/DOWN requires an ON command to become active (default). • P1031 = 2: Last MOP setpoint not saved in P1040 MOP UP/DOWN active without additional ON command. • P1031 = 3: Last MOP setpoint saved in P1040 on powering-up MOP UP/DOWN active without additional ON command.							
P1041[0...2]	**BI: MOP select setpoint automatically/manually**	0 - 4294967295	0	T	-	CDS	U32	3
	Sets the signal source to change over from manual to automatic mode. If using the motorized potentiometer in the manual mode the setpoint is changed using two signals for up and down e.g. P1035 and P1036. If using the automatic mode the setpoint must be interconnected via the connector input (P1042). 0: manually 1: automatically							
Notice:	Refer to: P1035, P1036, P1042							
P1042[0...2]	**CI: MOP auto setpoint**	0 - 4294967295	0	T	-	CDS	U32	3
	Sets the signal source for the setpoint of the motorized potentiometer if automatic mode P1041 is selected.							
Notice:	Refer to: P1041							
P1043[0...2]	**BI: MOP accept rampgenerator setpoint**	0 - 4294967295	0	T	-	CDS	U32	3
	Sets the signal source for the setting command to accept the setting value for the motorized potentiometer. The value becomes effective for a 0/1 edge of the setting command.							
Notice:	Refer to: P1044							
P1044[0...2]	**CI: MOP rampgenerator setpoint**	0 - 4294967295	0	T	-	CDS	U32	3
	Sets the signal source for the setpoint value for the MOP. The value becomes effective for a 0/1 edge of the setting command.							
Notice:	Refer to: P1043							

Parameter	Function	Range	Factory default	Can be changed	Scaling	Data set	Data type	Acc. Level
r1045	**CO: MOP input frequency of the RFG [Hz]**	-	-	-	-	-	Float	3
	Displays the motorized potentiometer setpoint before it passed the MOP RFG.							
P1047[0...2]	**MOP ramp-up time of the RFG [s]**	0.00 - 1000.00	10.00	U, T	-	DDS	Float	2
	Sets the ramp-up time for the internal MOP ramp-function generator. The setpoint is changed from zero up to limit defined in P1082 within this time.							
Notice:	Refer to: P1048, P1082							
P1048[0...2]	**MOP ramp-down time of the RFG [s]**	0.00 - 1000.0	10.00	U, T	-	DDS	Float	2
	Sets the ramp-down time for the internal MOP ramp-function generator. The setpoint is changed from limit defined in P1082 down to zero within this time.							
Notice:	Refer to: P1047, P1082							
r1050	**CO: Actual output freq. of the MOP [Hz]**	-	-	-	-	-	Float	2
	Displays output frequency of motor potentiometer setpoint.							
P1055[0...2]	**BI: Enable JOG right**	0 - 4294967295	19.8	T	-	CDS	U32	3
	Defines source of JOG right when P0719 = 0 (Auto selection of command/setpoint source).							
P1056[0...2]	**BI: Enable JOG left**	0 - 4294967295	0	T	-	CDS	U32	3
	Defines source of JOG left when P0719 = 0 (Auto selection of command/setpoint source).							
P1057	**JOG enable**	0 - 1	1	T	-	-	U16	3
	While JOG enable is '0' Jogging (P1056 and P1055) is disabled. When '1' Jogging is enabled.							
P1058[0...2]	**JOG frequency [Hz]**	0.00 - 550.00	5.00	U, T	-	DDS	Float	2
	Jogging increases the motor speed by small amounts. The JOG mode allows the operator to perform a specific number of revolutions and position the rotor manually. In JOG mode, the RUN button on the operator panel for jogging uses a non-latching switch on one of the digital inputs to control the motor speed. While jogging, P1058 determines the frequency at which the inverter will run. The motor speed is increased as long as 'JOG left' or 'JOG right' are selected and until the left or right JOG frequency is reached.							
Dependency:	P1060 and P1061 set up and down ramp times respectively for jogging. Rounding times (P1130 - P1133), rounding type (P1134) and P2167 will also have influence on the JOG ramp.							
P1059[0...2]	**JOG frequency left [Hz]**	0.00 - 550.00	5.00	U, T	-	DDS	Float	2
	While JOG left is selected, this parameter determines the frequency at which the inverter will run.							
Dependency:	P1060 and P1061 set up and down ramp times respectively for jogging.							
P1060[0...2]	**JOG ramp-up time [s]**	0.00 - 650.00	10.00	U, T	-	DDS	Float	2
	Sets jog ramp-up time. This is the time used while jogging is active.							
Dependency:	See also P3350, P3353.							
Notice:	Ramp times will be used as follows: • P1060/P1061 : JOG mode is active • P1120/P1121 : Normal mode (ON/OFF) is active • P1060/P1061 : Normal mode (ON/OFF) and P1124 is active The rounding of P1130 - P1133 also applies to the JOG ramping.							
Note:	If the SuperTorque function is enabled, the inverter will initially ramp using the value in P3353.							

Parameter	Function	Range	Factory default	Can be changed	Scaling	Data set	Data type	Acc. Level
P1061[0...2]	**JOG ramp-down time [s]**	0.00 - 650.00	10.00	U, T	-	DDS	Float	2
	Sets ramp-down time. This is the time used while jogging is active.							
Dependency:	See also P3350, P3353.							
Note:	See P1060							
P1070[0...2]	**CI: Main setpoint**	0 - 4294967295	1050[0]	T	-	CDS	U32	3
	Defines source of main setpoint.							
Setting:	755	Analog input 1 setpoint						
	1024	Fixed frequency setpoint						
	1050	Motor potentiometer (MOP) setpoint						
P1071[0...2]	**CI: Main setpoint scaling**	0 - 4294967295	1	T	4000H	CDS	U32	3
	Defines source of the main setpoint scaling.							
Setting:	See P1070							
P1074[0...2]	**BI: Disable additional setpoint**	0 - 4294967295	0	U, T	-	CDS	U32	3
	Disables additional setpoint.							
Setting:	See P1070							
P1075[0...2]	**CI: Additional setpoint**	0 - 4294967295	0	T	-	CDS	U32	3
	Defines source of the additional setpoint (to be added to main setpoint).							
Setting:	See P1070							
P1076[0...2]	**CI: Additional setpoint scaling**	0 - 4294967295	[0] 1 [1] 0 [2] 1	T	4000H	CDS	U32	3
	Defines source of scaling for additional setpoint (to be added to main setpoint).							
Setting:	1	Scaling of 1.0 (100%)						
	755	Analog input 1 setpoint						
	1024	Fixed frequency setpoint						
	1050	MOP setpoint						
r1078	**CO: Total frequency setpoint [Hz]**	-	-	-	-	-	Float	3
	Displays sum of main and additional setpoints.							
r1079	**CO: Selected frequency setpoint [Hz]**	-	-	-	-	-	Float	3
	Displays selected frequency setpoint. Following frequency setpoints are displayed: • r1078 Total frequency setpoint • P1058 JOG frequency right • P1059 JOG frequency left							
Dependency:	P1055 (BI: Enable JOG right) or P1056 (BI: Enable JOG left) define command source of JOG right or JOG left respectively.							
Note:	P1055 = 0 and P1056 = 0 ==> Total frequency setpoint is selected.							

Parameter	Function	Range	Factory default	Can be changed	Scaling	Data set	Data type	Acc. Level
P1080[0...2]	**Minimum frequency [Hz]**	0.00 - 550.00	0.00	C, U, T	-	DDS	Float	1
	Sets minimum motor frequency at which motor will run irrespective of frequency setpoint. The minimum frequency P1080 represents a masking frequency of 0 Hz for all frequency target value sources e.g. analog input, MOP, FF, USS with the exception of the JOG target value source (analogous to P1091). Thus the frequency band +/-P1080 is run through in optimum time by means of the acceleration/deceleration ramps. Dwelling in the frequency band is not possible. Furthermore, an overshoot of the actual frequency f_act upper minimum frequency P1080 is output by the signal function |f_act| > f_min.							
Note:	Value set here is valid both for clockwise and for counterclockwise rotation. Under certain conditions (e.g. ramping, current limiting), motor can run below minimum frequency.							
P1082[0...2]	**Maximum frequency [Hz]**	0.00 - 550.00	50.00	C, T	-	DDS	Float	1
	Sets maximum motor frequency at which motor will run irrespective of the frequency setpoint. The value set here is valid for both clockwise and counterclockwise rotation. Furthermore, the monitoring function |f_act| >= P1082 (r0052 bit 10, see example below) is affected by this parameter.							
Example:	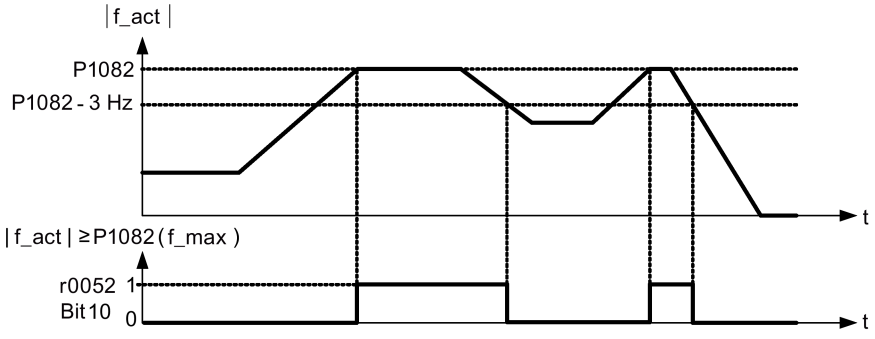							
Dependency:	The maximum value of P1082 also depends on the nominal frequency: Max. P1082 = min (15*P0310, 550.0 Hz). As consequence P1082 can be affected if P0310 is changed to a smaller value. The maximum frequency and the pulse frequency depending on each other. The maximum frequency affects the pulse frequency according to the following table.							

	P1800			
	2 kHz	4 kHz	6 kHz	8 - 16 kHz
f_{max} P1082	0 - 133.3 Hz	0 - 266.6 Hz	0 - 400 Hz	0 - 550.0 Hz

Example:

If P1082 is set to 350 Hz a pulse frequency from at least 6 kHz is necessary. If P1800 is smaller than 6 kHz the parameter is changed P1800 = 6 kHz.

The maximum output frequency of inverter can be exceeded if one of the following is active:

- P1335 ≠ 0 (Slip compensation active):

$$f_{max}\ (P1335) = f_{max} + f_{slip,max} = P1082 + \frac{P1336}{100} \cdot \frac{r0330}{100} \cdot P0310$$

- P1200 ≠ 0 (Flying restart active):

$$f_{max}\ (P1200) = f_{max} + 2 \cdot f_{slip,nom} = P1082 + 2 \cdot \frac{r0330}{100} \cdot P0310$$

Parameter	Function	Range	Factory default	Can be changed	Scaling	Data set	Data type	Acc. Level
Note:	When using the setpoint source • Analog Input • USS the setpoint frequency (in Hz) is cyclically calculated using • a percentage value(e.g. for the analog input r0754) • a hexadecimal value (e.g. for the USS r2018[1]) • and the reference frequency P2000. If for example P1082 = 80 Hz, P2000 = 50 Hz and the analog input is parameterized with P0757 = 0 V, P0758 = 0 %, P0759 = 10 V, P0760 = 100 %, a setpoint frequency of 50 Hz will be applied at 10 V of the analog input. When Quick Commissioning is carried out P2000 is changed as follows: P2000 = P1082.							
r1084	**Resultant maximum frequency [Hz]**	-	-	-	-	-	Float	3
	Displays resultant maximum frequency.							
P1091[0...2]	**Skip frequency [Hz]**	0.00 - 550.00	0.00	U, T	-	DDS	Float	3
	Defines skip frequency 1 which avoids effects of mechanical resonance and suppresses frequencies within +/-P1101 (skip frequency bandwidth).							
Notice:	Stationary operation is not possible within the suppressed frequency range; the range is merely passed through (on the ramp). For example, if P1091 = 10 Hz and P1101 = 2 Hz, it is not possible to operate continuously between 10 Hz +/- 2 Hz (i.e. between 8 and 12 Hz).							
Note:	The function is disabled if P1091 = 0.							
P1092[0...2]	**Skip frequency 2 [Hz]**	0.00 - 550.00	0.00	U, T	-	DDS	Float	3
	Defines skip frequency 2 which avoids effects of mechanical resonance and suppresses frequencies within +/-P1101 (skip frequency bandwidth).							
Note:	See P1091							
P1093[0...2]	**Skip frequency 3 [Hz]**	0.00 - 550.00	0.00	U, T	-	DDS	Float	3
	Defines skip frequency 3 which avoids effects of mechanical resonance and suppresses frequencies within +/-P1101 (skip frequency bandwidth).							
Note:	See P1091							
P1094[0...2]	**Skip frequency 4 [Hz]**	0.00 - 550.00	0.00	U, T	-	DDS	Float	3
	Defines skip frequency 4 which avoids effects of mechanical resonance and suppresses frequencies within +/-P1101 (skip frequency bandwidth).							
Note:	See P1091							
P1101[0...2]	**Skip frequency bandwidth [Hz]**	0.00 - 10.00	2.00	U, T	-	DDS	Float	3
	Delivers frequency bandwidth to be applied to skip frequencies.							
Note:	See P1091							
P1110[0...2]	**BI: Inhibit negative frequency setpoint**	0 - 4294967295	0	T	-	CDS	U32	3
	This parameter suppresses negative setpoints. Therefore, modification of the motor direction is inhibited to the set-point channel. If a minimum frequency (P1080) and a negative setpoint are given, the motor is accelerated by a positive value in relationship to the minimum frequency.							
Setting:	0	Disabled						
	1	Enabled						

Parameter	Function	Range	Factory default	Can be changed	Scaling	Data set	Data type	Acc. Level
P1113[0...2]	**BI: Reverse**	0 - 4294967295	19.11	T	-	CDS	U32	3
	Defines source of reverse command used when P0719 = 0 (Auto selection of command/setpoint source).							
Setting:	722.0	Digital input 1 (requires P0701 to be set to 99, BICO)						
	722.1	Digital input 2 (requires P0702 to be set to 99, BICO)						
	722.2	Digital input 3 (requires P0703 to be set to 99, BICO)						
r1114	**CO: Freq. setpoint after direction control [Hz]**	-	-	-	-	-	Float	3
	Displays setpoint frequency after change of direction.							
r1119	**CO: Freq. setpoint before RFG [Hz]**	-	-	-	-	-	Float	3
	Displays frequency setpoint at the input to the ramp function generator after modification by other functions, e.g.: • P1110 BI: Inhibit neg. freq. setpoint, • P1091 - P1094 skip frequencies, • P1080 min. frequency, • P1082 max. frequency, This value is available filtered (r0020) and unfiltered (r1119).							
P1120[0...2]	**Ramp-up time [s]**	0.00 - 650.00	10.00	C, U, T	-	DDS	Float	1
	Time taken for motor to accelerate from standstill up to maximum motor frequency (P1082) when no rounding is used. Setting the ramp-up time too short can cause the inverter to trip (overcurrent F1).							
Dependency:	Rounding times (P1130 - P1133), rounding type (P1134), and ramp-up time scaling factor (P1138) will also have influence on the ramp. See also P3350, P3353.							
Notice:	Ramp times will be used as follows: • P1060/P1061 : JOG mode is active • P1120/P1121 : Normal mode (ON/OFF) is active • P1060/P1061 : Normal mode (ON/OFF) and P1124 is active Set ramp-up time = ramp-up time scaling factor (P1138) x ramp-up time (P1120).							
Note:	If an external frequency setpoint with set ramp rates is used (e.g. from a PLC), the best way to achieve optimum inverter performance is to set ramp times in P1120 and P1121 slightly shorter than those of the PLC. Changes to P1120 will be immediately effective. If the SuperTorque function is enabled, the inverter will initially ramp using the value in P3353.							
P1121[0...2]	**Ramp-down time [s]**	0.00 - 650.00	10.00	C, U, T	-	DDS	Float	1
	Time taken for motor to decelerate from maximum motor frequency (P1082) down to standstill when no rounding is used.							
Dependency:	Ramp-down time scaling factor (P1139) will also have influence on the ramp. See also P3350, P3353.							
Notice:	Setting the ramp-down time too short can cause the inverter to trip (overcurrent F1/overvoltage F2). Ramp times will be used as follows: • P1060/P1061 : JOG mode is active • P1120/P1121 : Normal mode (ON/OFF) is active • P1060/P1061 : Normal mode (ON/OFF) and P1124 is active Set ramp-down time = ramp-down time scaling factor (P1139) x ramp-down time (P1121).							
Note:	Changes to P1121 will be immediately effective. See P1120							

Parameter	Function	Range	Factory default	Can be changed	Scaling	Data set	Data type	Acc. Level
P1124[0...2]	**BI: Enable JOG ramp times**	0 - 4294967295	0	T	-	CDS	U32	3
	Defines source for switching between jog ramp times (P1060, P1061) and normal ramp times (P1120, P1121) as applied to the RFG. This parameter is valid for normal mode (ON/OFF) only.							
Dependency:	See also P1175.							
Notice:	P1124 does not have any impact when JOG mode is selected. In this case, jog ramp times (P1060, P1061) will be used all the time. If the Dual Ramp function is selected using P1175, ramp times will switch between normal (P1120, P1121) and JOG (P1060, P1061) ramp times, depending on the settings of P2150, P2157 and P2159. Therefore, it is not recommended that JOG ramp is selected at the same time as Dual Ramp. See P1120.							
P1130[0...2]	**Ramp-up initial rounding time [s]**	0.00 - 40.00	0.00	U, T	-	DDS	Float	2
	Defines rounding time in seconds at start of ramp-up.							
Notice:	Rounding times are recommended, since they prevent an abrupt response, thus avoiding detrimental effects on the mechanics. Rounding times are not recommended when analog inputs are used, since they would result in over-shoot/undershoot in the inverter response.							
Note:	If short or zero ramp times (P1120, P1121 < P1130, P1131, P1132, P1133) are set, the total ramp up time (t_up) or ramp down time (t_down) will not depend on P1130.							
P1131[0...2]	**Ramp-up final rounding time [s]**	0.00 - 40.00	0.00	U, T	-	DDS	Float	2
	Defines rounding time at end of ramp-up.							
Notice:	See P1130							
P1132[0...2]	**Ramp-down initial rounding time [s]**	0.00 - 40.00	0.00	U, T	-	DDS	Float	2
	Defines rounding time at start of ramp-down.							
Notice:	See P1130							
P1133[0...2]	**Ramp-down final rounding time [s]**	0.00 - 40.00	0.00	U, T	-	DDS	Float	2
	Defines rounding time at end of ramp-down.							
Notice:	See P1130							
P1134[0...2]	**Rounding type**	0 - 1	0	U, T	-	DDS	U16	2
	Defines the smoothing which is active by setpoint modifications during acceleration or deceleration (e.g. new setpoint, OFF1, OFF3, REV). This smoothing is applied, if the motor is ramped-up or ramped-down and • P1134 = 0, • P1132 > 0, P1133 > 0 and • the setpoint is not yet reached.							
	0	Continuous smoothing						
	1	Discontinuous smoothing						
Dependency:	Effect only when P1130 (Ramp-up initial rounding time) or P1131 (Ramp-up final rounding time) or P1132 (Ramp-down initial rounding time) or P1133 (Ramp-down final rounding time) > 0 s.							

Parameter	Function	Range	Factory default	Can be changed	Scaling	Data set	Data type	Acc. Level
P1135[0...2]	**OFF3 ramp-down time [s]**	0.00 - 650.00	5.00	C, U, T	-	DDS	Float	2
	Defines ramp-down time from maximum frequency to standstill for OFF3 command. Settings in P1130 and P1134 will have no effect on OFF3 ramp-down characteristic. An initial ramp-down rounding time of approximately 10% of P1135 is however included. For the total OFF3 ramp-down time: t_down,OFF3 = f(P1134) = 1.1 * P1135 * (|f_2|/P1082)							
Note:	This time may be exceeded if the Vdc_max level is reached.							
P1138[0...2]	**Ramp-up time scaling factor**	1.00 - 10.00	1.00	C, U, T	-	DDS	Float	1
	Defines the scaling factor for the ramp-up time. This is a ramp-up time multiplier, extending the maximum ramp-up time to 6500 s. Set ramp-up time = ramp-up time scaling factor (P1138) x ramp-up time (P1120).							
Note:	This time may be exceeded if the Vdc_max level is reached.							
P1139[0...2]	**Ramp-down time scaling factor**	1.00 - 10.00	1.00	C, U, T	-	DDS	Float	1
	Defines the scaling factor for the ramp-down time.This is a ramp-down time multiplier, extending the maximum ramp-down time to 6500 s. Set ramp-down time = ramp-down time scaling factor (P1139) x ramp-down time (P1121).							
Note:	This time may be exceeded if the VDC_max level is reached.							
P1140[0...2]	**BI: RFG enable**	0 - 4294967295	1	T	-	CDS	U32	3
	Defines command source of RFG enable command (RFG: ramp function generator). If binary input is equal to zero then the RFG output will be set immediately to 0.							
P1141[0...2]	**BI: RFG start**	0 - 4294967295	1	T	-	CDS	U32	3
	Defines command source of RFG start command (RFG: ramp function generator). If binary input is equal to zero then the RFG output is held at its present value.							
P1142[0...2]	**BI: RFG enable setpoint**	0 - 4294967295	1	T	-	CDS	U32	3
	Defines command source of RFG enable setpoint command (RFG: ramp function generator). If binary input is equal to zero, the RFG input will be set to zero and the RFG output will ramp-down to zero.							
r1170	**CO: Frequency setpoint after RFG [Hz]**	-	-	-	-	-	Float	3
	Displays overall frequency setpoint after ramp generator.							
P1175[0...2]	**BI: Dual ramp enable**	0 - 4294967295	0	T	-	CDS	U32	3

Parameter	Function	Range	Factory default	Can be changed	Scaling	Data set	Data type	Acc. Level
	Defines command source of dual ramp enable command. If binary input is equal to one, then the dual ramp will be applied. This works as follows: • Ramp-up: – Inverter starts ramp-up using ramp time from P1120 – When f_act > P2157, switch to ramp time from P1060 • Ramp-down: – Inverter starts ramp-down using ramp time from P1061 – When f_act < P2159, switch to ramp time from P1121 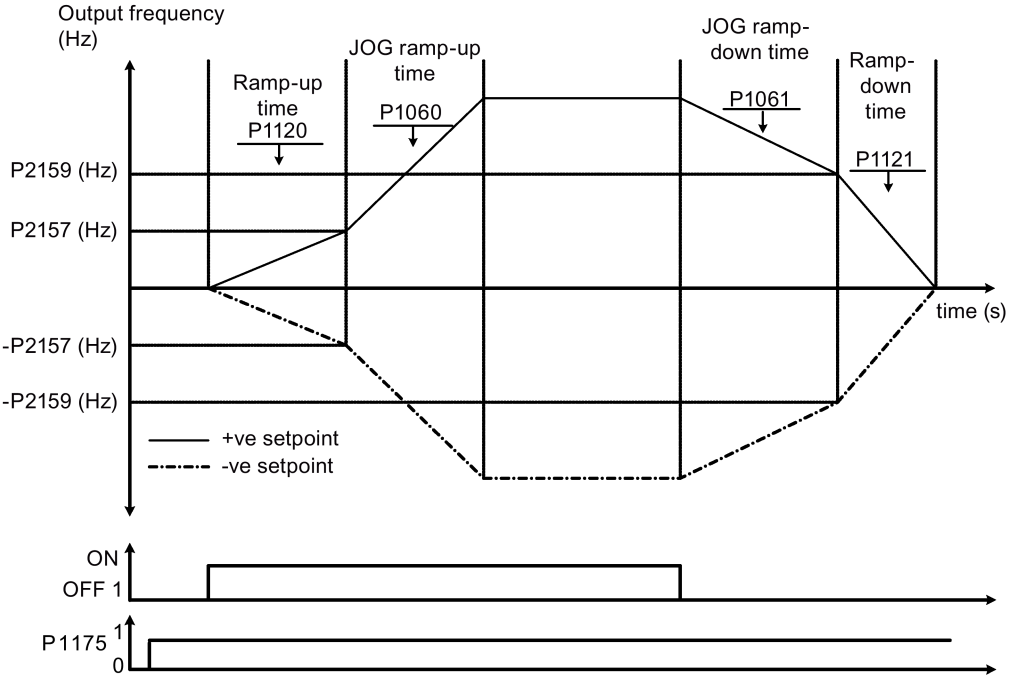							
Dependency:	See P2150, P2157, P2159, r2198.							
Note:	The dual ramp algorithm uses r2198 bits 1 and 2 to determine (f_act > P2157) and (f_act < P2159). P2150 is used to apply hysteresis to these settings, so the user may wish to change the value of this parameter to make the dual ramp function more responsive. It is not recommended that the dual ramp function is used in conjunction with JOG ramp. See P1124.							
r1199.7...12	**CO/BO: RFG status word**	-	-	-	-	-	U16	3
	Displays status of ramp function generator (RFG).							
	Bit	**Signal name**			**1 signal**		**0 signal**	
	07	Ramp #0 active			Yes		No	
	08	Ramp #1 active			Yes		No	
	09	Ramping finished			Yes		No	
	10	Direction right/left			Yes		No	
	11	f_act > P2157(f_2)			Yes		No	
	12	f_act < P2159(f_3)			Yes		No	
Note:	See P2157 and P2159.							

Parameter	Function	Range	Factory default	Can be changed	Scaling	Data set	Data type	Acc. Level
P1200	**Flying start**	0 - 6	0	U, T	-	-	U16	2
	Starts inverter onto a spinning motor by rapidly changing the output frequency of the inverter until the actual motor speed has been found. Then, the motor runs up to setpoint using the normal ramp time.							
	0	Flying start disabled						
	1	Flying start always active; searches in both directions						
	2	Flying start active after power on, fault, OFF2; searches in both directions						
	3	Flying start active after fault, OFF2; searches in both directions						
	4	Flying start always active; searches in direction of setpoint only						
	5	Flying start active after power on, fault, OFF2; searches in direction of setpoint only						
	6	Flying start active after fault, OFF2; searches in direction of setpoint only						
Notice:	Flying start must be used in cases where the motor may still be turning (e.g. after a short mains break) or can be driven by the load. Otherwise, overcurrent trips will occur.							
Note:	Useful for motors with high inertia loads. Settings 1 to 3 search in both directions. Settings 4 to 6 search only in direction of setpoint.							
P1202[0...2]	**Motor-current: flying start [%]**	10 - 200	100	U, T	-	DDS	U16	3
	Defines search current used for flying start. Value is in [%] based on rated motor current (P0305).							
Note:	Reducing the search current may improve performance for flying start if the inertia of the system is not very high. However, search current settings in P1202 that are below 30% (and sometimes other settings in P1202 and P1203) may cause motor speed to be found prematurely or too late, which can result in F1 or F2 trips.							
P1203[0...2]	**Search rate: flying start [%]**	10 - 500	100	U, T	-	DDS	U16	3
	Sets factor (in V/f mode only) by which the output frequency changes during flying start to synchronize with turning motor. This value is entered in [%]. It defines the reciprocal initial gradient in the search sequence. P1203 influences the time taken to search for the motor frequency.							
Example:	For a motor with 50 Hz, 1350 rpm, 100 % would produce a maximum search time of 600 ms.							
Note:	A higher value produces a flatter gradient and thus a longer search time. A lower value has the opposite effect.							
r1204	**Status word: flying start V/f**	-	-	-	-	-	U16	4
	Bit parameter for checking and monitoring states during search.							

	Bit	Signal name	1 signal	0 signal
	00	Current applied	Yes	No
	01	Current could not be applied	Yes	No
	02	Voltage reduced	Yes	No
	03	Slope-filter started	Yes	No
	04	Current less threshold	Yes	No
	05	Current-minimum	Yes	No
	07	Speed could not be found	Yes	No

Parameter	Function	Range	Factory default	Can be changed	Scaling	Data set	Data type	Acc. Level
P1210	**Automatic restart**	0 - 8	1	U, T	-	-	U16	2
	Configures automatic restart function.							
	0	Disabled						
	1	Trip reset after power on, P1211 disabled						
	2	Restart after mains blackout, P1211 disabled						
	3	Restart after mains brownout or fault, P1211 enabled						
	4	Restart after mains brownout, P1211 enabled						
	5	Restart after mains blackout and fault, P1211 disabled						
	6	Restart after mains brown- /blackout or fault, P1211 enabled						
	7	Restart after mains brown- /blackout or fault, trip when P1211 expires						
	8	Restart after mains brown- /blackout with F3 and leave an interval in seconds determined by P1214, P1211 disabled						
	9	Restart after mains brown- /blackout with F3 during the attempt time determined by P1214, P1211 disabled						
	10	Restart after mains brown- /blackout with F3 during the attempt time determined by P1214 or manual fault acknowledgement, P1211 disabled						
Dependency:	Automatic restart requires constant ON command via a digital input wire link.							
Caution:	P1210 > 2 can cause the motor to restart automatically without toggling the ON command!							
Notice:	A "mains brownout" is a very short mains break, where the DC link has not fully collapsed before the power is reapplied. A "mains blackout" is a long mains break, where the DC link has fully collapsed before the power is reapplied. "Delay Time" is the time between attempts of quitting fault. The "Delay Time" of first attempt is 1 second, then it will be doubled every next attempt. The "Number of Restart Attempts" can be set in P1211. This is the number of restarts the inverter will try to quit fault. When faults are quit and after 4 seconds of no fault condition, "Number of Restart Attempts" will be reset to P1211 and "Delay Time" will be reset to 1 second.							
	P1210 = 0: Automatic restart is disabled. P1210 = 1: The inverter will acknowledge (reset) faults i.e. it will reset a fault when the power is re-applied. This means the inverter must be fully powered down, a brownout is not sufficed. The inverter will not run until the ON command has been toggled. P1210 = 2: The inverter will acknowledge the fault F3 at power on after blackout and restarts the inverter. It is necessary that the ON command is wired via a digital input (digital input). P1210 = 3: For these settings it is fundamental that the inverter only restarts if it has been in a RUN state at the time of the faults (F3, etc.). The inverter will acknowledge the fault and restarts the inverter after a brownout. It is necessary that the ON command is wired via a digital input (digital input). P1210 = 4: For these settings it is fundamental that the inverter only restarts if it has been in a RUN state at the time of the fault (F3). The inverter will acknowledge the fault and restarts the inverter after a brownout. It is necessary that the ON command is wired via a digital input (digital input). P1210 = 5: The inverter will acknowledge the faults F3 etc. at power on after blackout and restarts the inverter. It is necessary that the ON command is wired via a digital input (digital input).							

Parameter	Function	Range	Factory default	Can be changed	Scaling	Data set	Data type	Acc. Level
	P1210 = 6: The inverter will acknowledge the faults (F3 etc.) at power on after blackout or brownout and restarts the inverter. It is necessary that the ON command is wired via a digital input (digital input). Setting 6 causes the motor to restart immediately. P1210 = 7: The inverter will acknowledge the faults (F3 etc.) at power on after blackout or brownout and restarts the inverter. It is necessary that the ON command is wired via a digital input (digital input). Setting 7 causes the motor to restart immediately. The difference between this mode and Mode 6 is that the fault status bit (r0052.3) is not set until the number of restarts defined by P1211 have been exhausted. Flying start must be used in cases where the motor may still be turning (e.g. after a short mains break) or can be driven by the load (P1200). P1210 = 8: The inverter will acknowledge the fault (F3) at power on after blackout or brownout and restarts. It is necessary that the ON command is wired via a digital input (DI). Setting 8 causes the motor to restart immediately. The interval between restarts is determined by P1214. P1210 = 9: The inverter will acknowledge the fault (F3) at power on after blackout or brownout and restarts. It is necessary that the ON command is wired via a digital input (DI). The interval between restarts is fixed at 0.5 s. P1214 sets the total restart attempt time. If an F3 occurs and cannot be acknowledged within the time set in P1214, the F3 will go permanent and must be acknowledged manually to restart the inverter. P1210 = 10: • The inverter will acknowledge the fault (F3) at power on after blackout or brownout and restarts. It is necessary that the ON command is wired via a digital input (DI). The interval between restarts is fixed at 1.0 s. P1214 sets the total restart attempt time, but it must be equal to or less than 8 s. If an F3 occurs and cannot be acknowledged within the time set in P1214, the F3 will go permanent and must be acknowledged manually to restart the inverter. • If a fault (the inverter cannot recover from F6, F51, F52, F85, F100, and F101) occurs, the fault must be acknowledged manually at power on after blackout or brownout and the inverter restarts. It is necessary that the ON command is wired via a digital input (DI). Flying start must be used in cases where the motor may still be turning (e.g. after a short mains break) or can be driven by the load (P1200).							
P1211	**Number of restart attempts**	0 - 10	3	U, T	-	-	U16	3
	Specifies number of times inverter will attempt to restart if automatic restart P1210 is activated.							
P1214	**Restart time interval [s]**	0 - 1000	30	-	-	-	U16	3
	This parameter has either of the following functions: • Specifying the restart interval when P1210 = 8 • Specifying the total restart attempt time when P1210 = 9 or P1210 = 10							
P1215	**Holding brake enable**	0 - 1	0	C, T	-	-	U16	2
	Enables/disables holding brake function. The motor holding brake (MHB) is controlled via status word 1 r0052 bit 12. This signal can be issued via: • status word of the serial interface (e.g. USS) • digital outputs (e.g. DO1: ==> P0731 = 52.C (r0052 bit 12))							
	0	Motor holding brake disabled						
	1	Motor holding brake enabled						

Parameter	Function	Range	Factory default	Can be changed	Scaling	Data set	Data type	Acc. Level
Caution:	If the inverter controls the motor holding brake, then a commissioning may not be carried out for potentially hazardous loads (e.g. suspended loads for crane applications) unless the load has been secured. It is not permissible to use the motor holding brake as working brake, as it is generally only designed for a limited number of emergency braking operations.							
P1216	**Holding brake release delay[s]**	0.0 - 20.0	1.0	C, T	-	-	Float	2
	Defines period during which inverter runs at minimum frequency P1080 before ramping up.							
P1217	**Holding time after ramp down [s]**	0.0 - 20.0	1.0	C, T	-	-	Float	2
	Defines time for which inverter runs at minimum frequency (P1080) after ramping down.							
Note:	If P1217 > P1227, P1227 will take precedence.							
P1218[0...2]	**BI: Motor holding brake override**	0 - 4294967295	0	U, T	-	CDS	U32	3
	Enables the motor holding brake output to be overridden, allowing the brake to be opened under separate control.							
P1227[0...2]	**Zero speed detection monitoring time [s]**	0.0 - 300.0	4.0	U, T	-	DDS	Float	2
	Sets the monitoring time for the standstill identification. When braking with OFF1 or OFF3, standstill is identified after this time has expired, after the setpoint speed has fallen below P2167. After this, the braking signal is started, the system waits for the closing time and then the pulses are cancelled.							
Note:	P1227 = 300.0: function is deactivated P1227 = 0.0: pulses are locked immediately If P1217 > P1227, P1227 will take precedence.							
P1230[0...2]	**BI: Enable DC braking**	0 - 4294967295	0	U, T	-	CDS	U32	3
	Enables DC braking via a signal applied from an external source. Function remains active while external input signal is active. DC braking causes the motor to stop rapidly by applying a DC braking current (current applied also holds shaft stationary). When the DC braking signal is applied, the inverter output pulses are blocked and the DC current is not applied until the motor has been sufficiently demagnetized. This delay time is set in P0347 (demagnetization time). If this delay is too short, overcurrent trips can occur. The level of DC braking is set in P1232 (DC braking current - relative to the rated motor current) which is set to 100 % by default.							
Caution:	With the DC braking, the kinetic energy of the motor is converted into heat in the motor. The inverter could overheat if it remains in this status for an excessive period of time!							
P1232[0...2]	**DC braking current [%]**	0 - 250	100	U, T	-	DDS	U16	2
	Defines level of DC current relative to rated motor current (P0305). The DC braking can be issued observing the following dependencies: • OFF1/OFF3 ==> see P1233 • BICO ==> see P1230							
P1233[0...2]	**Duration of DC braking [s]**	0.00 - 250.00	0.00	U, T	-	DDS	Float	2
	Defines duration for which DC braking is active following an OFF1 or OFF3 command. When an OFF1 or OFF3 command is received by the inverter, the output frequency starts to ramp to 0 Hz. When the output frequency reaches the value set in P1234, the inverter injects a DC braking current P1232 for the time duration set in P1233.							
Caution:	See P1230							

Parameter	Function	Range	Factory default	Can be changed	Scaling	Data set	Data type	Acc. Level
Notice:	The DC braking function causes the motor to stop rapidly by applying a DC braking current. When the DC braking signal is applied, the inverter output pulses are blocked and the DC current not applied until the motor has been sufficiently demagnetized (demagnetization time is calculated automatically from motor data).							
Note:	P1233 = 0 means that DC braking is not activated.							
P1234[0...2]	**DC braking start frequency [Hz]**	0.00 - 550.00	550.00	U, T	-	DDS	Float	2
	Sets start frequency for DC braking. When an OFF1 or OFF3 command is received by the inverter, the output frequency starts to ramp to 0 Hz. When the output frequency reaches the value set in start frequency of DC braking P1234, the inverter injects a DC braking current P1232 for the time duration set in P1233.							
P1236[0...2]	**Compound braking current [%]**	0 - 250	0	U, T	-	DDS	U16	2
	Defines DC level superimposed on AC waveform after exceeding DC-link voltage threshold of compound braking. The value is entered in [%] relative to rated motor current (P0305). Compound braking switch-on level (V_DC,Comp): If P1254 = 0 --> V_DC,Comp = 1.13 * sqrt(2) * V_mains = 1.13 * sqrt(2) * P0210 otherwise V_DC,Comp = 0.98 * r1242 The Compound Brake is an overlay of the DC brake function with regenerative braking (effective braking at the ramp) after OFF1 or OFF3. This enables braking with controlled motor frequency and a minimum of energy returned to the motor. Through optimization of the ramp-down time and the compound braking an efficient braking without additional HW components is possible.							
Dependency:	Compound braking depends on the DC link voltage only (see threshold above). This will happen on OFF1, OFF3 and any regenerative condition. It is disabled, when: • DC braking is active • Flying start is active							
Notice:	Increasing the value will generally improve braking performance; however, if you set the value too high, an overcurrent trip may result. If used with dynamic braking enabled as well compound braking will take priority. If used with the Vdc_max controller enabled the inverter behavior when braking may be worsened particularly with high values of compound braking.							
Note:	P1236 = 0 means that compound braking is not activated.							
P1237	**Dynamic braking**	0 - 5	0	U, T	-	-	U16	2
	Dynamic braking absorbs the braking energy in a chopper resistor. This parameter defines the rated duty cycle of the braking resistor (chopper resistor). Dynamic braking is active when the function is enabled and DC-link voltage exceeds the dynamic braking switch-on level. Dynamic braking switch-on level (V_DC,Chopper) : If P1254 = 0 --> V_DC,Chopper = 1.13 * sqrt(2) * V_mains = 1.13 * sqrt(2) * P0210 otherwise V_DC,Chopper = 0.98 * r1242							
	0	Disabled						
	1	5 % duty cycle						
	2	10 % duty cycle						
	3	20 % duty cycle						
	4	50 % duty cycle						
	5	100 % duty cycle						
Note:	This parameter is only applicable for inverters of frame size D. For frame sizes A to C, the duty cycle of the braking resistor can be selected with the dynamic braking module (see Appendix "Dynamic braking module (Page 355)").							

Parameter	Function	Range	Factory default	Can be changed	Scaling	Data set	Data type	Acc. Level
Dependency:	If dynamic braking is used with DC braking enabled as well as compound braking, DC braking and compound braking will take priority. 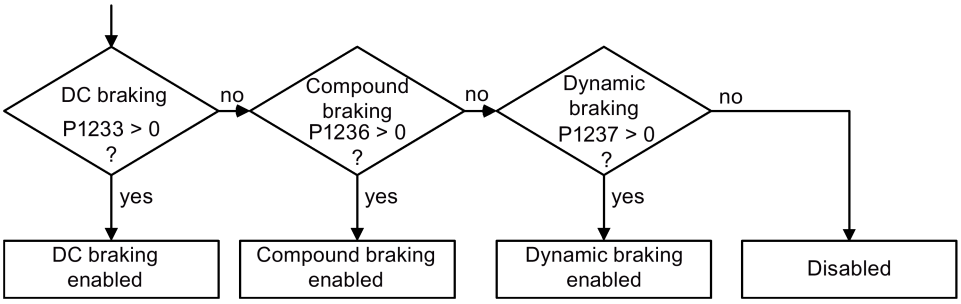							
Notice:	Initially the brake will operate at a high duty cycle dependant on the DC link level until the thermal limit is approached. The duty cycle specified by this parameter will then be imposed. The resistor should be able to operate at this level indefinitely without overheating. 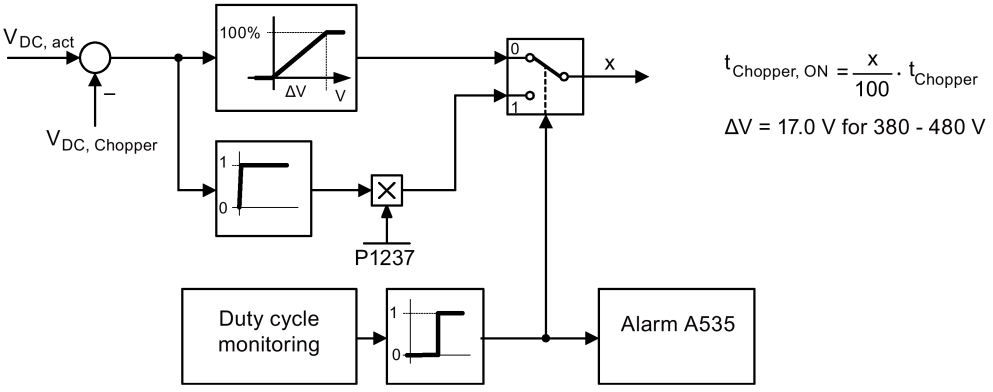 $t_{Chopper, ON} = \frac{x}{100} \cdot t_{Chopper}$ ΔV = 17.0 V for 380 - 480 V The threshold for the warning A535 is equivalent to 10 seconds running at 95 % duty cycle. The duty cycle will be limited when it was running 12 seconds at 95 % duty cycle.							
P1240[0...2]	**Configuration of Vdc controller**	0 - 3	1	C, T	-	DDS	U16	3
	Enables/disables Vdc controller. The Vdc controller dynamically controls the DC link voltage to prevent overvoltage trips on high inertia systems.							
	0	Vdc controller disabled						
	1	Vdc_max controller enabled						
	2	Kinetic buffering (Vdc_min controller) enabled						
	3	Vdc_max controller and kinetic buffering (KIB) enabled						
Caution:	If P1245 increased too much, it may interfere with the inverter normal operation.							
Note:	• Vdc_max controller: Vdc_max controller automatically increases ramp-down times to keep the DC-link voltage (r0026) within limits (r1242). • Vdc_min controller: Vdc_min is activated if DC-link voltage falls below the switch on level P1245. The kinetic energy of the motor is then used to buffer the DC-link voltage, thus causing deceleration of the inverter. If the inverter trips with F3 immediately, try increasing the dynamic factor P1247 first. If still tripping with F3 try then increasing the switch on level P1245.							

Parameter	Function	Range	Factory default	Can be changed	Scaling	Data set	Data type	Acc. Level
r1242	**CO: Switch-on level of Vdc_max [V]**	-	-	-	-	-	Float	3
	Displays switch-on level of Vdc_max controller. Following equation is only valid, if P1254 = 0: r1242 = 1.15 * sqrt(2) * V_mains = 1.15 * sqrt(2) * P0210 otherwise r1242 is internally calculated.							
P1243[0...2]	**Dynamic factor of Vdc_max [%]**	10 - 200	100	U, T	-	DDS	U16	3
	Defines dynamic factor for DC link controller.							
Dependency:	P1243 = 100 % means P1250, P1251 and P1252 (gain, integration time and differential time) are used as set. Otherwise, these are multiplied by P1243 (dynamic factor of Vdc_max).							
Note:	Vdc controller adjustment is calculated automatically from motor and inverter data.							
P1245[0...2]	**Switch on level kinetic buffering [%]**	65 - 95	76	U, T	-	DDS	U16	3
	Enter switch-on level for kinetic buffering (KIB) in [%] relative to supply voltage (P0210). r1246[V] = (P1245[%]/100) * sqrt(2) * P0210							
Warning:	Increasing the value too much, may interfere with the inverter normal operation.							
Note:	P1254 has no effect on the switch-on-level for kinetic buffering. P1245 default for the single phase variants is 74%.							
r1246[0...2]	**CO: Switch-on level kinetic buffering [V]**	-	-	-	-	DDS	Float	3
	Displays switch-on level of kinetic buffering (KIB, Vdc_min controller). If the dc-link voltage drops below the value in r1246, kinetic buffering will be activated. That means the motor frequency will be reduced in order to keep Vdc within the valid range. If there is not enough regenerative energy, the inverter trips with undervoltage.							
P1247[0...2]	**Dynamic factor of kinetic buffering [%]**	10 - 200	100	U, T	-	DDS	U16	3
	Enters dynamic factor for kinetic buffering (KIB, Vdc_min controller). P1247 = 100 % means P1250, P1251 and P1252 (gain, integration time and differential time) are used as set. Otherwise, these are multiplied by P1247 (dynamic factor of Vdc_min).							
Note:	Vdc controller adjustment is calculated automatically from motor and inverter data.							
P1250[0...2]	**Gain of Vdc controller**	0.00 - 10.00	1.00	U, T	-	DDS	Float	3
	Enters gain for Vdc controller.							
P1251[0...2]	**Integration time Vdc controller [ms]**	0.1 - 1000.0	40.0	U, T	-	DDS	Float	3
	Enters integral time constant for Vdc controller.							
P1252[0...2]	**Differential time Vdc controller [ms]**	0.0 - 1000.0	1.0	U, T	-	DDS	Float	3
	Enters differential time constant for Vdc controller.							
P1253[0...2]	**Vdc controller output limitation [Hz]**	0.00 - 550.00	10.00	U, T	-	DDS	Float	3
	Limits maximum effect of Vdc_max controller.							
Dependency:	This parameter is influenced by automatic calculations defined by P0340.							
Note:	The Factory setting depends on inverter power.							

Parameter	Function	Range	Factory default	Can be changed	Scaling	Data set	Data type	Acc. Level
P1254	**Auto detect Vdc switch-on levels**	0 - 1	1	C, T	-	-	U16	3
	Enables/disables auto-detection of switch-on levels for Vdc_max controller. For best results, it is recommended to set P1254 = 1 (auto-detection of Vdc switch-on levels enabled). Setting P1254 = 0 is only recommended when there is a high degree of fluctuation of the DC-link when the motor is being driven. Note that the auto detection only works when the inverter has been in standby for over 20s.							
	0	Disabled						
	1	Enabled						
Dependency:	See P0210							
P1256[0...2]	**Reaction of kinetic buffering**	0 - 2	0	C, T	-	DDS	U16	3
	Enters reaction for kinetic buffering controller (Vdc_min controller). Depending on the setting selected, the frequency limit defined in P1257 is used to either hold the speed or disable pulses. If not enough regeneration is produced, inverter may trip with undervoltage.							
	0	Maintain DC-link until trip						
	1	Maintain DC-link until trip/stop						
	2	Control stop						
Note:	P1256 = 0: Maintain DC-link voltage until mains is returned or inverter is tripped with undervoltage. The frequency is kept above the frequency limit provided in P1257. P1256 = 1: Maintain DC-link voltage until mains is returned or inverter is tripped with undervoltage or pulses are disabled when frequency falls below the limit in P1257. P1256 = 2: This option ramps down the frequency to standstill even when mains return. If mains do not return, frequency brought down under the control of Vdc_min controller until P1257 limit. Then pulses are disabled or undervoltage has occurred. If mains return, then an OFF1 is active until P1257 limit. Then pulses are disabled.							
P1257[0...2]	**Frequency limit for kinetic buffering [Hz]**	0.00 - 550.00	2.50	U, T	-	DDS	Float	3
	Frequency which kinetic buffering (KIB) either hold speed or disable pulses depending on P1256.							
P1300[0...2]	**Control mode**	0 - 19	0	C, T	-	DDS	U16	2
	Parameter to select the control method. Controls relationship between speed of motor and voltage supplied by inverter.							
	0	V/f with linear characteristic						
	1	V/f with FCC						
	2	V/f with quadratic characteristic						
	3	V/f with programmable characteristic						
	4	V/f with linear eco						
	5	V/f for textile applications						
	6	V/f with FCC for textile applications						
	7	V/f with quadratic eco						
	19	V/f control with independent voltage setpoint						

Parameter	Function	Range	Factory default	Can be changed	Scaling	Data set	Data type	Acc. Level
	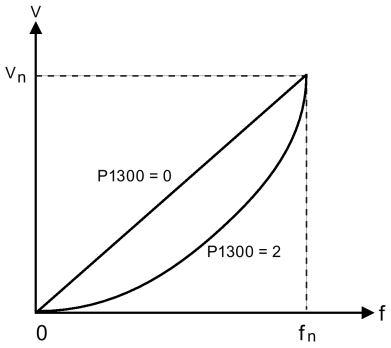							
Note:	P1300 = 1: V/f with FCC (flux current control) • Maintains motor flux current for improved efficiency • If FCC is chosen, linear V/f is active at low frequencies P1300 = 2: V/f with a quadratic characteristic • Suitable for centrifugal fans/pumps P1300 = 3: V/f with a programmable characteristic • User defined characteristic (see P1320) P1300 = 4: V/f with linear characteristic and Economy Mode • Linear characteristic with Economy Mode • Modifies the output voltage to reduce power consumption P1300 = 5,6: V/f for textile applications • Slip compensation disabled. • Imax controller modifies the output voltage only. • Imax controller does not influence the output frequency. P1300 = 7: V/f with quadratic characteristic and Economy Mode • Quadratic characteristic with Economy Mode • Modifies the output voltage to reduce power consumption P1300 = 19: V/f control with independent voltage setpoint							

Parameter	Function	Range	Factory default	Can be changed	Scaling	Data set	Data type	Acc. Level
	The following table presents an overview of control parameters (V/f) that can be modified in relationship to P1300 dependencies:							

Par No.	Parameter name	Level	V/f						
			P1300 =						
			0	1	2	3	5	6	19
P1300[3]	Control mode	2	x	x	x	x	x	x	x
P1310[3]	Continuous boost	2	x	x	x	x	x	x	x
P1311[3]	Acceleration boost	2	x	x	x	x	x	x	x
P1312[3]	Starting boost	2	x	x	x	x	x	x	x
P1316[3]	Boost end frequency	3	x	x	x	x	x	x	x
P1320[3]	Programmable V/f freq. coord. 1	3	–	–	–	x	–	–	–
P1321[3]	Programmable V/f volt. coord. 1	3	–	–	–	x	–	–	–
P1322[3]	Programmable V/f freq. coord. 2	3	–	–	–	x	–	–	–
P1323[3]	Programmable V/f volt. coord. 2	3	–	–	–	x	–	–	–
P1324[3]	Programmable V/f freq. coord. 3	3	–	–	–	x	–	–	–
P1325[3]	Programmable V/f volt. coord. 3	3	–	–	–	x	–	–	–
P1330[3]	CI: Voltage setpoint	3	–	–	–	–	–	–	x
P1333[3]	Start frequency for FCC	3	–	x	–	–	–	x	–
P1335[3]	Slip compensation	2	x	x	x	x	–	–	–
P1336[3]	CO: Slip limit	2	x	x	x	x	–	–	–
P1338[3]	Resonance damping gain V/f	3	x	x	x	x	–	–	–
P1340[3]	Imax freq. controller prop. gain	3	x	x	x	x	x	x	x
P1341[3]	Imax controller integral time	3	x	x	x	x	x	x	x
P1345[3]	Imax controller prop. gain	3	x	x	x	x	x	x	x
P1346[3]	Imax voltage ctrl. integral time	3	x	x	x	x	x	x	x
P1350[3]	Voltage soft start	3	x	x	x	x	x	x	x

P1310[0...2]	**Continuous boost [%]**	0.0 - 250.0	50.0	U, T	PERCENT	DDS	Float	2

Defines boost level in [%] relative to P0305 (rated motor current) applicable to both linear and quadratic V/f curves.

At low output frequencies the output voltage is low to keep the flux level constant. However, the output voltage may be too low for the following:

- magnetization the asynchronous motor
- hold the load
- overcome losses in the system.

The inverter output voltage can be increased via P1310 for the compensation of losses, hold loads at 0 Hz or maintain the magnetization.

The magnitude of the boost in Volt at a frequency of zero is defined as follows:

V_ConBoost,100 = P0305 * Rsadj * (P1310/100)

Where:

Rsadj = stator resistance adjusted for temperature

Rsadj = (r0395/100) * (P0304/(sqrt(3) * P0305)) * P0305 * sqrt(3)

Note:

Increasing the boost levels increases motor heating (especially at standstill).

Setting in P0640 (motor overload factor [%]) limits the boost:

sum(V_Boost)/(P0305 * Rsadj) <= P1310/100

The boost values are combined when continuous boost (P1310) used in conjunction with other boost parameters (acceleration boost P1311 and starting boost P1312). However priorities are allocated to these parameters as follows:

P1310 > P1311 > P1312

The total boost is limited by following equation:

sum(V_Boost) <= 3 * R_S * I_Mot = 3 * P0305 * Rsadj

Parameter	Function	Range	Factory default	Can be changed	Scaling	Data set	Data type	Acc. Level
P1311[0...2]	**Acceleration boost [%]**	0.0 - 250.0	0.0	U, T	PERCENT	DDS	Float	2
	Applies boost in [%] relative to P0305 (rated motor current) following a positive setpoint change and drops back out once the setpoint is reached. P1311 will only produce boost during ramping, and is therefore useful for additional torque during acceleration and deceleration. As opposed to P1312, which is only active on the first acceleration issued after the ON command, P1311 is always effect during an acceleration and deceleration when issued. The magnitude of the boost in volt at a frequency of zero is defined as follows: V_AccBoost,100 = P0305 * Rsadj * (P1311/100) Where: Rsadj = stator resistance adjusted for temperature Rsadj = (r0395/100) * (P0304/(sqrt(3) * P0305)) * P0305 * sqrt(3)							
Note:	See P1310							
P1312[0...2]	**Starting boost [%]**	0.0 - 250.0	0.0	U, T	PERCENT	DDS	Float	2
	Applies a constant linear offset (in [%] relative to P0305 (rated motor current)) to active V/f curve (either linear or quadratic) after an ON command and is active until: 1. ramp output reaches setpoint for the first time respectively 2. setpoint is reduced to less than present ramp output This is useful for starting loads with high inertia. Setting the starting boost (P1312) too high will cause the inverter to limit the current, which will in turn restrict the output frequency to below the setpoint frequency. The magnitude of the boost in volt at a frequency of zero is defined as follows: V_StartBoost,100 = P0305 * Rsadj * (P1312/100) Where: Rsadj = stator resistance adjusted for temperature Rsadj = (r0395/100) * (P0304/(sqrt(3) * P0305)) * P0305 * sqrt(3)							
Note:	See P1310							
r1315	**CO: Total boost voltage [V]**	-	-	-	-	-	Float	4
	Displays total value of voltage boost.							
P1316[0...2]	**Boost end frequency [%]**	0.0 - 100.0	20.0	U, T	PERCENT	DDS	Float	3
	Defines point at which programmed boost reaches 50 % of its value. This value is expressed in [%] relative to P0310 (rated motor frequency). The default frequency is defined as follows: V_Boost,min = 2 * (3 + (153/sqrt(P_Motor))							
Dependency:	This parameter is influenced by automatic calculations defined by P0340.							
Note:	The expert user may change this value to alter the shape of the curve, e.g. to increase torque at a particular frequency. Default value is depending on inverter type and its rating data.							

Parameter	Function	Range	Factory default	Can be changed	Scaling	Data set	Data type	Acc. Level
P1320[0...2]	**Programmable V/f freq. coord. 1 [Hz]**	0.00 - 550.00	0.00	T	-	DDS	Float	3
	Sets the frequency of the first point of V/f coordinates (P1320/1321 to P1324/1325) to define V/f characteristic. These parameter pairs can be used to provide correct torque at correct frequency.							
Dependency:	To set parameter, select P1300 = 3 (V/f with programmable characteristic). The acceleration boost and starting boost defined in P1311 and P1312 are applied to V/f with programmable characteristic.							
Note:	Linear interpolation will be applied between the individual data points. V/f with programmable characteristic (P1300 = 3) has 3 programmable points and 2 non-programmable points. The 2 non-programmable points are: • Continuous boost P1310 at 0 Hz • Rated motor voltage P0304 at rated motor frequency P0310							
P1321[0...2]	**Programmable V/f volt. coord. 1 [V]**	0.0 - 3000.0	0.0	U, T	-	DDS	Float	3
	See P1320							
P1322[0...2]	**Programmable V/f freq. coord. 2 [Hz]**	0.00 - 550.00	0.00	T	-	DDS	Float	3
	See P1320							
P1323[0...2]	**Programmable V/f volt. coord. 2 [V]**	0.0 - 3000.0	0.0	U, T	-	DDS	Float	3
	See P1320							
P1324[0...2]	**Programmable V/f freq. coord. 3 [Hz]**	0.00 - 550.00	0.00	T	-	DDS	Float	3
	See P1320							
P1325[0...2]	**Programmable V/f volt. coord. 3 [V]**	0.0 - 3000.0	0.0	U, T	-	DDS	Float	3
	See P1320							
P1330[0...2]	**CI: Voltage setpoint**	0 - 4294967295	0	T	-	CDS	U32	3
	BICO parameter for selecting source of voltage setpoint for independent V/f control (P1300 = 19).							
P1333[0...2]	**Start frequency for FCC [%]**	0.0 - 100.0	10.0	U, T	PERCENT	DDS	Float	3
	Defines start frequency at which FCC (flux current control) is enabled as [%] of rated motor frequency (P0310).							
Notice:	If this value is too low, the system may become unstable.							

Parameter	Function	Range	Factory default	Can be changed	Scaling	Data set	Data type	Acc. Level
P1334[0...2]	**Slip compensation activation range [%]**	1.0 - 20.0	6.0	U, T	PERCENT	DDS	Float	3
	To set the frequency activation range for slip compensation. The percentage value of P1334 refers to the motor rated frequency P0310. The upper threshold will always stay 4 % above P1334. Range of slip compensation: 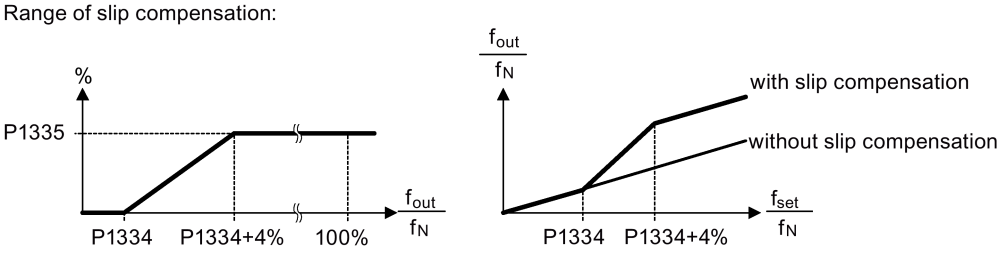							
Dependency:	Slip compensation (P1335) active.							
Note:	See P1335. The starting frequency of the slip compensation is P1334 * P0310.							
P1335[0...2]	**Slip compensation [%]**	0.0 - 600.0	0.0	U, T	PERCENT	DDS	Float	2
	Parameter dynamically adjusts inverter output frequency so that motor speed is kept constant independent of motor load. In the V/f-control, the motor frequency will always be less than the inverter output frequency due to the slip frequency. For a given output frequency, the motor frequency will drop as load is increased. This behavior, typical for induction motors, can be compensated using slip compensation. P1335 can be used to enable and fine-tune the slip compensation.							
Dependency:	Gain adjustment enables fine-tuning of the actual motor speed. P1335 > 0, P1336 > 0, P1337 = 0 if P1300 = 5, 6.							
Notice:	The applied value of the slip compensation (scaled by P1335) is limited by following equation: f_Slip_comp,max = r0330 * (P1336/100)							
Note:	P1335 = 0 %: Slip compensation disabled. P1335 = 50 % - 70 %: Full slip compensation at cold motor (partial load). P1335 = 100 % (standard setting for warm stator): Full slip compensation at warm motor (full load).							
P1336[0...2]	**Slip limit [%]**	0 - 600	250	U, T	-	DDS	U16	2
	Compensation slip limit in [%] relative to r0330 (rated motor slip), which is added to frequency setpoint.							
Dependency:	Slip compensation (P1335) active.							
r1337	**CO: V/f slip frequency [%]**	-	-	-	PERCENT	-	Float	3
	Displays actual compensated motor slip as [%]. f_slip [Hz] = r1337 [%] * P0310/100							
Dependency:	Slip compensation (P1335) active.							

Parameter	Function	Range	Factory default	Can be changed	Scaling	Data set	Data type	Acc. Level
P1338[0...2]	**Resonance damping gain V/f**	0.00 - 10.00	0.00	U, T	-	DDS	Float	3
	Defines resonance damping gain for V/f. The di/dt of the active current will be scaled by P1338. If di/dt increases the resonance damping circuit decreases the inverter output frequency.							
Dependency:	This parameter is influenced by automatic calculations defined by P0340.							
Note:	The resonance circuit damps oscillations of the active current which frequently occur during no-load operation. In V/ f modes (see P1300), the resonance damping circuit is active in a range from approx. 6 % to 80 % of rated motor frequency (P0310). If the value of P1338 is too high, this will cause instability (forward control effect).							
P1340[0...2]	**Imax controller proportional gain**	0.000 - 0.499	0.030	U, T	-	DDS	Float	3
	Proportional gain of the I_max controller. The Imax controller reduces inverter current if the output current exceeds the maximum motor current (r0067). In linear V/f, parabolic V/f, FCC, and programmable V/f modes the I_max controller uses both a frequency controller (see P1340 and P1341) and a voltage controller (see P1345 and P1346). The frequency controller seeks to reduce current by limiting the inverter output frequency (to a minimum of the two times nominal slip frequency). If this action does not successfully remove the overcurrent condition, the inverter output voltage is reduced using the I_max voltage controller. When the overcurrent condition has been removed successfully, frequency limiting is removed using the ramp-up time set in P1120. In linear V/f for textiles, FCC for textiles, or external V/f modes only the I_max voltage controller is used to reduce current (see P1345 and P1346).							
Note:	The I_max controller can be disabled by setting the frequency controller integral time P1341 to zero. This disables both the frequency and voltage controllers. Note that when disabled, the I_max controller will take no action to reduce current but overcurrent warnings will still be generated, and the inverter will trip in excessive overcurrent or overload conditions.							
P1341[0...2]	**Imax controller integral time [s]**	0.000 - 50.000	0.300	U, T	-	DDS	Float	3
	Integral time constant of the I_max controller. • P1341 = 0: I_max controller disabled • P1340 = 0 and P1341 > 0: frequency controller enhanced integral • P1340 > 0 and P1341 > 0: frequency controller normal PI control							
Dependency:	This parameter is influenced by automatic calculations defined by P0340.							
Note:	See P1340 for further information. The Factory setting depends on inverter power.							

Parameter	Function	Range	Factory default	Can be changed	Scaling	Data set	Data type	Acc. Level
r1343	**CO: Imax controller frequency output [Hz]**	-	-	-	-	-	Float	3
	Displays effective frequency limitation.							
Dependency:	If I_max controller not in operation, parameter normally shows maximum frequency P1082.							
r1344	**CO: Imax controller voltage output [V]**	-	-	-	-	-	Float	3
	Displays amount by which the I_max controller is reducing the inverter output voltage.							
P1345[0...2]	**Imax voltage controller proportional gain**	0.000 - 5.499	0.250	U, T	-	DDS	Float	3
	If the output current (r0068) exceeds the maximum current (r0067), the inverter is dynamically controlled by reducing the output voltage. This parameter sets the proportional gain of this controller.							
Dependency:	This parameter is influenced by automatic calculations defined by P0340.							
Note:	See P1340 for further information. The Factory setting depends on inverter power.							
P1346[0...2]	**Imax voltage controller integral time [s]**	0.000 - 50.000	0.300	U, T	-	DDS	Float	3
	Integral time constant of the I_max voltage controller. • P1341 = 0: I_max controller disabled • P1345 = 0 and P1346 > 0: I_max voltage controller enhanced integral • P1345 > 0 and P1346 > 0: I_max voltage controller normal PI control							
Dependency:	This parameter is influenced by automatic calculations defined by P0340.							
Note:	See P1340 for further information. The Factory setting depends on inverter power.							
r1348	**Economy mode factor [%]**	-	-	-	PERCENT	-	Float	2
	Displays the calculated economy mode factor (range 80%-120%) applied to the demanded output volts. Economy mode is used to find the most efficient operating point for a given load. It does this by a continuous method of hill climbing optimization. Hill climbing optimization works by slightly changing the output volts either up or down and monitoring the change in input power. If the input power has decreased, the algorithm changes the output volts in the same direction. If the input power has increased then the algorithm adjusts the output volts in the other direction. Using this algorithm, the software should be able to find the minimum point on the graph between input power and output volts.							
Notice:	If this value is too low, the system may become unstable.							
P1350[0...2]	**Voltage soft start**	0 - 1	0	U, T	-	DDS	U16	3
	Sets whether voltage is built up smoothly during magnetization time (ON) or whether it simply jumps to boost voltage (OFF).							
	0	OFF						
	1	ON						
Note:	The settings for this parameter bring benefits and drawbacks: • P1350 = 0: OFF (jump to boost voltage) Benefit: flux is built up quickly Drawback: motor may move • P1350 = 1: ON (smooth voltage build-up) Benefit: motor less likely to move Drawback: flux build-up takes longer							

Parameter	Function	Range	Factory default	Can be changed	Scaling	Data set	Data type	Acc. Level
P1780[0...2]	**Control word of Rs/Rr-adaption**	0 - 1	1	U, T	-	DDS	U16	3
	Enables thermal adaptation of stator and rotor resistance to reduce torque errors in speed/torque regulation with speed sensor, or speed errors in speed/torque regulation without speed sensor.							
	Bit	**Signal name**			**1 signal**		**0 signal**	
	00	Enable thermal Rs/Rr-adapt.			Yes		No	
P1800[0...2]	**Pulse frequency [kHz]**	2 - 16	4	U, T	-	DDS	U16	2
	Sets pulse frequency of power switches in inverter. The frequency can be changed in steps of 2 kHz.							
Dependency:	The minimum/maximum/default values of the pulse frequency are determined by the used power module. Furthermore the minimum pulse frequency depends on the parameterization of P1082 (maximum frequency) and P0310 (rated motor frequency).							
Note:	If the pulse frequency is increased, maximum inverter current r0209 can be reduced (derating). The derating characteristic depends on the type and power of the inverter. If silent operation is not absolutely necessary, lower pulse frequencies may be selected to reduce inverter losses and radio-frequency emissions. Under certain circumstances, the inverter may reduce the pulse frequency to provide protection against overtemperature (see P0290 and P0291 bit 00).							
r1801[0...1]	**CO: Pulse frequency [kHz]**	-	-	-	-	-	U16	3
	Displays information about pulse frequency of power switches in inverter. r1801[0] displays the actual inverter pulse frequency. r1801[1] displays the minimum inverter pulse frequency which can be reached when the functions "motor identification" or "inverter overload reaction" are active. If no PM is plugged this parameter is set to 0 kHz.							
Index:	[0]	Actual pulse frequency						
	[1]	Minimum pulse frequency						
Notice:	Under certain conditions (inverter overtemperature, see P0290), this can differ from the values selected in P1800 (pulse frequency).							
P1802	**Modulator mode**	1 - 3	3	U, T	-	-	U16	3
	Selects inverter modulator mode.							
	1	Asymmetric SVM						
	2	Space vector modulation						
	3	SVM/ASVM controlled mode						
Notice:	• Asymmetric space vector modulation (ASVM) produces lower switching losses than space vector modulation (SVM), but may cause irregular rotation at very low speeds. • Space vector modulation (SVM) with over-modulation may produce current waveform distortion at high output voltages. • Space vector modulation (SVM) without over-modulation will reduce maximum output voltage available to motor.							
P1803[0...2]	**Maximum modulation [%]**	20.0 - 150.0	106.0	U, T	-	DDS	Float	3
	Sets maximum modulation index.							
Note:	P1803 = 100 %: Limit for over-control (for ideal inverter without switching delay).							

Parameter	Function		Range	Factory default	Can be changed	Scaling	Data set	Data type	Acc. Level
P1810	**Control word Vdc control**		0 - 3	3	U, T	-	-	U16	3
	Configures Vdc filtering and compensation.								
	Bit	**Signal name**				**1 signal**		**0 signal**	
	00	Enable Vdc average filter				Yes		No	
	01	Enable Vdc compensation				Yes		No	
Note:	P1810 default for the single phase variants is 2.								
P1820[0...2]	**Reverse output phase sequence**		0 - 1	0	T	-	DDS	U16	2
	Changes sequence of phases without changing setpoint polarity.								
	0		Forward						
	1		Reverse the Motor						
Note:	See P1000								
P1825	**On-state voltage of IGBT [V]**		0.0 - 20.0	0.9	U, T	-	-	Float	4
	Corrects on-state voltage of the IGBTs.								
P1828	**Gating unit dead time [µs]**		0.00 - 3.98	0.01	U, T	-	-	Float	4
	Sets compensation time of gating unit interlock.								
P1900	**Select motor data identification**		0 - 2	0	C, T	-	-	U16	2
	Performs motor data identification.								
	0		Disabled						
	2		Identification of all parameters in standstill						
Dependency:	No measurement if motor data incorrect. P1900 = 2: Calculated value for stator resistance (see P0350) is overwritten.								
Notice:	When the identification is finished P1900 is set to 0. When choosing the setting for measurement, observe the following: The value is actually adopted as P0350 parameter setting and applied to the control as well as being shown in the read-only parameters below. Ensure that the motor holding brake is not active when performing the motor identification.								
Note:	Before selecting motor data identification, "Quick commissioning" has to be performed in advance. Since the cable length of the applications differs in a wide range, the preset resistor P0352 is only a rough estimation. Better results of the motor identification can be achieved by specifying the cable resistor before the start of the motor identification by measuring/calculating. Once enabled (P1900 > 0), A541 generates a warning that the next ON command will initiate measurement of motor parameters. Communications - both via USS as well as via the Modbus - are interrupted for the time that it takes to make internal calculations. These calculations can take up to one minute to complete.								
P1909[0...2]	**Control word of motor data identification**		0 - 65519	23552	U, T	-	DDS	U16	4
	Control word of motor data identification.								
	Bit	**Signal name**				**1 signal**		**0 signal**	
	00	Estimation of Xs				Yes		No	
	01	Motor ID at 2 kHz				Yes		No	
	02	Estimation of Tr				Yes		No	
	03	Estimation of Lsigma				Yes		No	

Parameter	Function		Range	Factory default	Can be changed	Scaling	Data set	Data type	Acc. Level
	05	Det. Tr meas. with 2 freq.				Yes		No	
	06	Measurement of on voltage				Yes		No	
	07	Deadtime detection from Rs measurement				Yes		No	
	08	MotID with hw deadtime comp activ				Yes		No	
	09	No deadtime detection with 2 freq				Yes		No	
	10	Detect Ls with LsBlock method				Yes		No	
	11	MotID adaption of magnetizing current				Yes		No	
	12	MotID adaption of main reactance				Yes		No	
	13	MotID switch off saturation curve optim.				Yes		No	
	14	MotID saturation curve optim. all framesizes				Yes		No	
	15	MotID saturation curve optim. big framesizes				Yes		No	
P1910	**Select motor data identification**		0 - 23	0	T	-	-	U16	4
	Performs a motor data identification with extended figures. Performs stator resistance measuring.								
	0	Disabled							
	1	Identification of all parameters with parameter change							
	2	Identification of all parameters without parameter change							
	3	Identification of saturation curve with parameter change							
	4	Identification of saturation curve without parameter change							
	5	Identification of XsigDyn without parameter change							
	6	Identification of Tdead without parameter change							
	7	Identification of Rs without parameter change							
	8	Identification of Xs without parameter change							
	9	Identification of Tr without parameter change							
	10	Identification of Xsigma without parameter change							
	20	Set voltage vector							
	21	Set voltage vector without filtering in r0069							
	22	Set voltage vector rectangle signal							
	23	Set voltage vector triangle signal							
Notice:	Ensure that the motor holding brake is not active when performing the motor identification. P1910 can't be changed while the motor identification with P1900 is active (P1900 = 2 or 3). When the identification is finished P1910 is set to 0. When choosing the setting for measurement, observe the following: • "with parameter change" means that the value is actually adopted as P0350 parameter setting and applied to the control as well as being shown in the read-only parameters below. • "without parameter change" means that the value is only displayed, i.e. shown for checking purposes in the read-only parameter r1912 (identified stator resistance). The value is not applied to the control.								
Dependency:	No measurement if motor data incorrect. P1910 = 1: Calculated value for stator resistance (see P0350) is overwritten.								
Note:	See P1900								

Parameter	Function	Range	Factory default	Can be changed	Scaling	Data set	Data type	Acc. Level
r1912[0]	**Identified stator resistance [Ω]**	-	-	-	-	-	Float	4
	Displays measured stator resistance value (line-to-line). This value also includes the cable resistances.							
Index:	[0]	U_phase						
Notice:	If the value identified (Rs = stator resistance) does not lie within the range 0.1 % < Rs [p. u.] < 100 % fault message 41 (motor data identification failure) is issued. P0949 provides further information (fault value = 2 in this case).							
Note:	This value is measured using P1900 = 2.							
r1920[0]	**Identified dynamic leakage inductance**	-	-	-	-	-	Float	4
	Displays identified total dynamic leakage inductance.							
Index:	[0]	U_phase						
r1925[0]	**Identified on-state voltage [V]**	-	-	-	-	-	Float	4
	Displays identified on-state voltage of IGBT.							
Index:	[0]	U_phase						
Notice:	If the identified on-state voltage does not lie within the range 0.0V < 10V fault message 41 (motor data identification failure) is issued. P0949 provides further information (fault value = 20 in this case).							
r1926	**Identified gating unit dead time [µs]**	-	-	-	-	-	Float	2
	Displays identified dead time of gating unit interlock.							
P2000[0...2]	**Reference frequency [Hz]**	1.00 - 550.00	50.00	T	-	DDS	Float	2
	P2000 represents the reference frequency for frequency values which are displayed/transferred as a percentage or a hexadecimal value. Where: • hexadecimal 4000 H ==> P2000 (e.g.: USS-PZD) • percentage 100 % ==> P2000 (e.g.: analog input)							
Example:	If a BICO connection is made between two parameters or alternatively using P0719 or P1000, the 'unit' of the parameters (standardized (Hex) or physical (i.e. Hz) values) may differ. SINAMICS implicitly makes an automatic conversion to the target value. 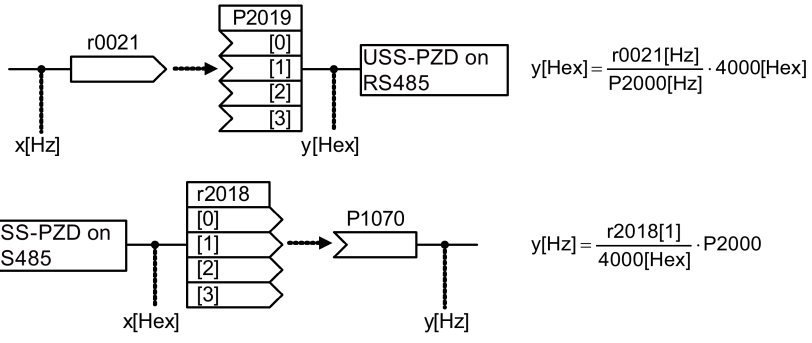							
Dependency:	When Quick Commissioning is carried out, P2000 is changed as follows: P2000 = P1082.							

Parameter	Function	Range	Factory default	Can be changed	Scaling	Data set	Data type	Acc. Level
Caution:	P2000 represents the reference frequency of the above mentioned interfaces. A maximum frequency setpoint of 2*P2000 can be applied via the corresponding interface. Unlike P1082 (Maximum Frequency) this limits the inverter frequency internally independent of the reference frequency. By modification of P2000 it will also adapt the parameter to the new settings. 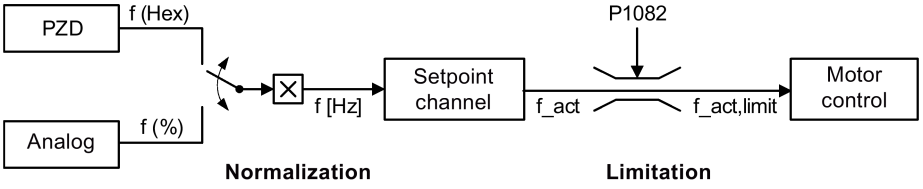 $f[Hz] = \frac{f(Hex)}{4000(Hex)} \cdot P2000 = \frac{f(\%)}{100\,\%} \cdot P2000$ $f_act,limit = \min(P1082, f_act)$							
Notice:	Reference parameters are intended as an aid to presenting setpoint and actual value signals in a uniform manner. This also applies to fixed settings entered as a percentage. A value of 100 % corresponds to a process data value of 4000H, or 4000 0000H in the case of double values. In this respect, the following parameters are available: P2000 Reference frequency — Hz P2001 Reference voltage — V P2002 Reference current — A P2003 Reference torque — Nm P2004 Reference power — kW / hp — f(P0100)							
Note:	Changes to P2000 result in a new calculation of P2004.							
P2001[0...2]	**Reference voltage [V]**	10 - 2000	1000	T	-	DDS	U16	3
	Full-scale output voltage (i.e. 100 %) used over serial link (corresponds to 4000H).							
Example:	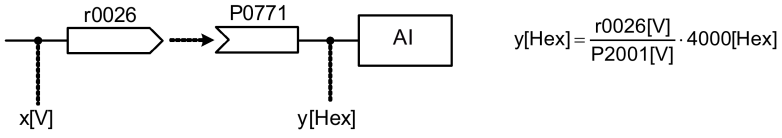 $y[Hex] = \frac{r0026[V]}{P2001[V]} \cdot 4000[Hex]$							
Note:	Changes to P2001 result in a new calculation of P2004.							
P2002[0...2]	**Reference current [A]**	0.10 - 10000.0	0.10	T	-	DDS	Float	3
	Full-scale output current used over serial link (corresponds to 4000H).							
Example:	If a BICO connection is made between two parameters, the 'unit' of the parameters (standardized (Hex) or physical (i.e. A) values) may differ. In this case an automatic conversion to the target value is made. 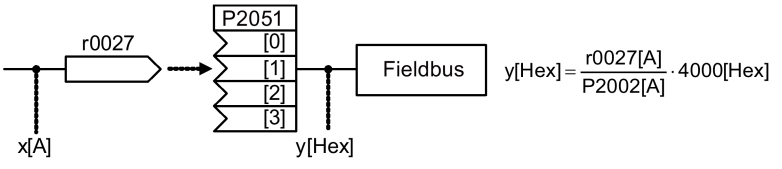 $y[Hex] = \frac{r0027[A]}{P2002[A]} \cdot 4000[Hex]$							
Dependency:	This parameter is influenced by automatic calculations defined by P0340.							
Note:	Changes to P2002 result in a new calculation of P2004.							

Parameter	Function	Range	Factory default	Can be changed	Scaling	Data set	Data type	Acc. Level
P2003[0...2]	**Reference torque [Nm]**	0.10 - 99999.0	0.75	T	-	DDS	Float	3
	Full-scale reference torque used over the serial link (corresponds to 4000H).							
Example:	If a BICO connection is made between two parameters, the 'unit' of the parameters (standardized (Hex) or physical (i.e. Nm) values) may differ. In this case an automatic conversion to the target value is made. 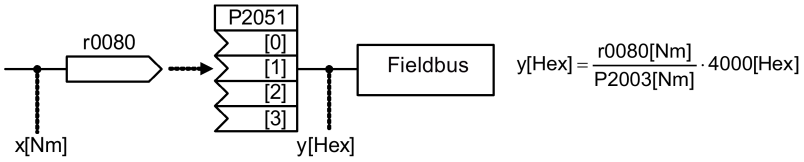							
Dependency:	This parameter is influenced by automatic calculations defined by P0340.							
Note:	Changes to P2003 result in a new calculation of P2004.							
P2004[0...2]	**Reference power**	0.01 - 2000.0	0.75	T	-	DDS	Float	3
	Full-scale reference power used over the serial link (corresponds to 4000H).							
Example:	If a BICO connection is made between two parameters, the 'unit' of the parameters (standardized (Hex) or physical (i.e. kW/hp) values) may differ. In this case an automatic conversion to the target value is made. 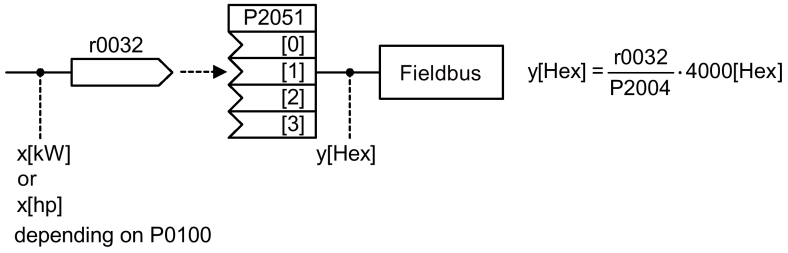							
P2010[0...1]	**USS/MODBUS baudrate**	6 - 12	6	U, T	-	-	U16	2
	Sets baud rate for USS/MODBUS communication.							
	6	9600 bps						
	7	19200 bps						
	8	38400 bps						
	9	57600 bps						
	10	76800 bps						
	11	93750 bps						
	12	115200 bps						
Index:	[0]	USS/MODBUS on RS485						
	[1]	USS on RS232 (reserved)						
Notice:	Before fitting SINAMICS V20 Smart Access to V20, if RS485 communication is present, then you must set P2010[1] = 12 via the BOP.							
Note:	This parameter, index 0, will alter the baudrate on RS485 regardless of the protocol selected in P2023.							

Parameter	Function	Range	Factory default	Can be changed	Scaling	Data set	Data type	Acc. Level
P2011[0...1]	**USS address**	0 - 31	0	U, T	-	-	U16	2
	Sets unique address for inverter.							
Index:	[0]	USS on RS485						
	[1]	USS on RS232 (reserved)						
Note:	You can connect up to a further 30 inverters via the serial link (i.e. 31 inverters in total) and control them with the USS serial bus protocol.							
P2012[0...1]	**USS PZD length**	0 - 8	2	U, T	-	-	U16	3
	Defines the number of 16-bit words in PZD part of USS telegram. In this area, process data (PZD) are continually exchanged between the master and slaves. The PZD part of the USS telegram is used for the main setpoint, and to control the inverter.							
Index:	[0]	USS on RS485						
	[1]	USS on RS232 (reserved)						
Notice:	USS protocol consists of PZD and PKW which can be changed by the user via P2012 and P2013 respectively. 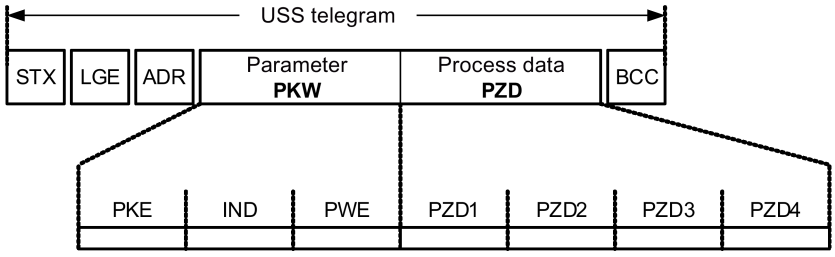 STX Start of text LGE Length ADR Address PKW Parameter ID value PZD Process data BCC Block check character PKE Parameter ID IND Sub-index PWE Parameter value							
	PZD transmits a control word and setpoint or status word and actual values. The number of PZD-words in a USS-telegram are determined by P2012, where the first two words are either: a) control word and main setpoint or b) status word and actual value. When P2012 is greater or equal to 4 the additional control word is transferred as the 4th PZD-word (default setting). 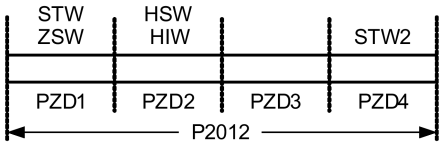 STW Control word ZSW Status word PZD Process data HSW Main setpoint HIW Main actual value							

Parameter	Function	Range	Factory default	Can be changed	Scaling	Data set	Data type	Acc. Level
P2013[0...1]	**USS PKW length**	0 - 127	127	U, T	-	-	U16	3
	Defines the number of 16-bit words in PKW part of USS telegram. The PKW area can be varied. Depending on the particular requirement, 3-word, 4-word or variable word lengths can be parameterized. The PKW part of the USS telegram is used to read and write individual parameter values.							
	0	No words						
	3	3 words						
	4	4 words						
	127	Variable						
Example:		Data type						
		U16 (16 Bit)		U32 (32 Bit)		Float (32 Bit)		
	P2013 = 3	X		Parameter access fault		Parameter access fault		
	P2013 = 4	X		X		X		
	P2013 = 127	X		X		X		
Index:	[0]	USS on RS485						
	[1]	USS on RS232 (reserved)						
Notice:	USS protocol consists of PZD and PKW which can be changed by the user via P2012 and P2013 respectively. P2013 determines the number of PKW-words in a USS-telegram. Setting P2013 to 3 or 4 determines the length of the PKW words (3 = three words and 4 = four words). When P2013 set to 127 automatically adjusts the length of the PKW words are required. P2013 = 3 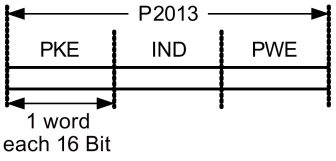 P2013 = 4 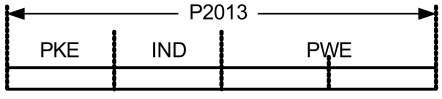 PKE Parameter ID IND Sub-index PWE Parameter value								

Parameter	Function	Range	Factory default	Can be changed	Scaling	Data set	Data type	Acc. Level
	If a fixed PKW length is selected only one parameter value can be transferred. In the case of indexed parameter, you must use the variable PKW length if you wish to have the values of all indices transferred in a single telegram. In selecting the fixed PKW length, it is important to ensure the value in question can be transferred using this PKW length. P2013 = 3, fixes PKW length, but does not allow access to many parameter values. A parameter fault is generated when an out-of-range value is used, the value will not be accepted but the inverter state will not be affected. Useful for applications where parameters are not changed, but MM3s are also used. Broadcast mode is not possible with this setting.							
	P2013 = 4, fixes PKW length. Allows access to all parameters, but indexed parameters can only be read one index at a time. Word order for single word values are different to setting 3 or 127, see example below. P2013 = 127, most useful setting. PKW reply length varies depending on the amount of information needed. Can read fault information and all indices of a parameter with a single telegram with this setting. Example: Set P0700 to value 5 (P0700 = 2BC (hex))							
		P2013 = 3	P2013 = 4			P2013 = 127		
	Master → SINAMICS	22BC 0000 0006	22BC 0000 0000 0006			22BC 0000 0006 0000		
	SINAMICS → Master	12BC 0000 0006	12BC 0000 0000 0006			12BC 0000 0006		
P2014[0...1]	**USS/MODBUS telegram off time [ms]**	0 - 65535	2000	T	-	-	U16	3
	Index 0 defines a time T_off after which a fault will be generated (F72) if no telegram is received via the USS/MODBUS channel RS485. Index 1 defines a time T_off after which a fault will be generated (F71) if no telegram is received via the USS channel RS232 (reserved).							
Index:	[0]	USS/MODBUS on RS485						
	[1]	USS on RS232 (reserved)						
Notice:	If time set to 0, no fault is generated (i.e. watchdog disabled).							
Note:	The telegram off time will function on RS485 regardless of the protocol set in P2023.							

Parameter	Function	Range	Factory default	Can be changed	Scaling	Data set	Data type	Acc. Level
r2018[0...7]	**CO: PZD from USS/MODBUS on RS485**	-	-	-	4000H	-	U16	3
	Displays process data received via USS/MODBUS on RS485.							
	USS on RS485: 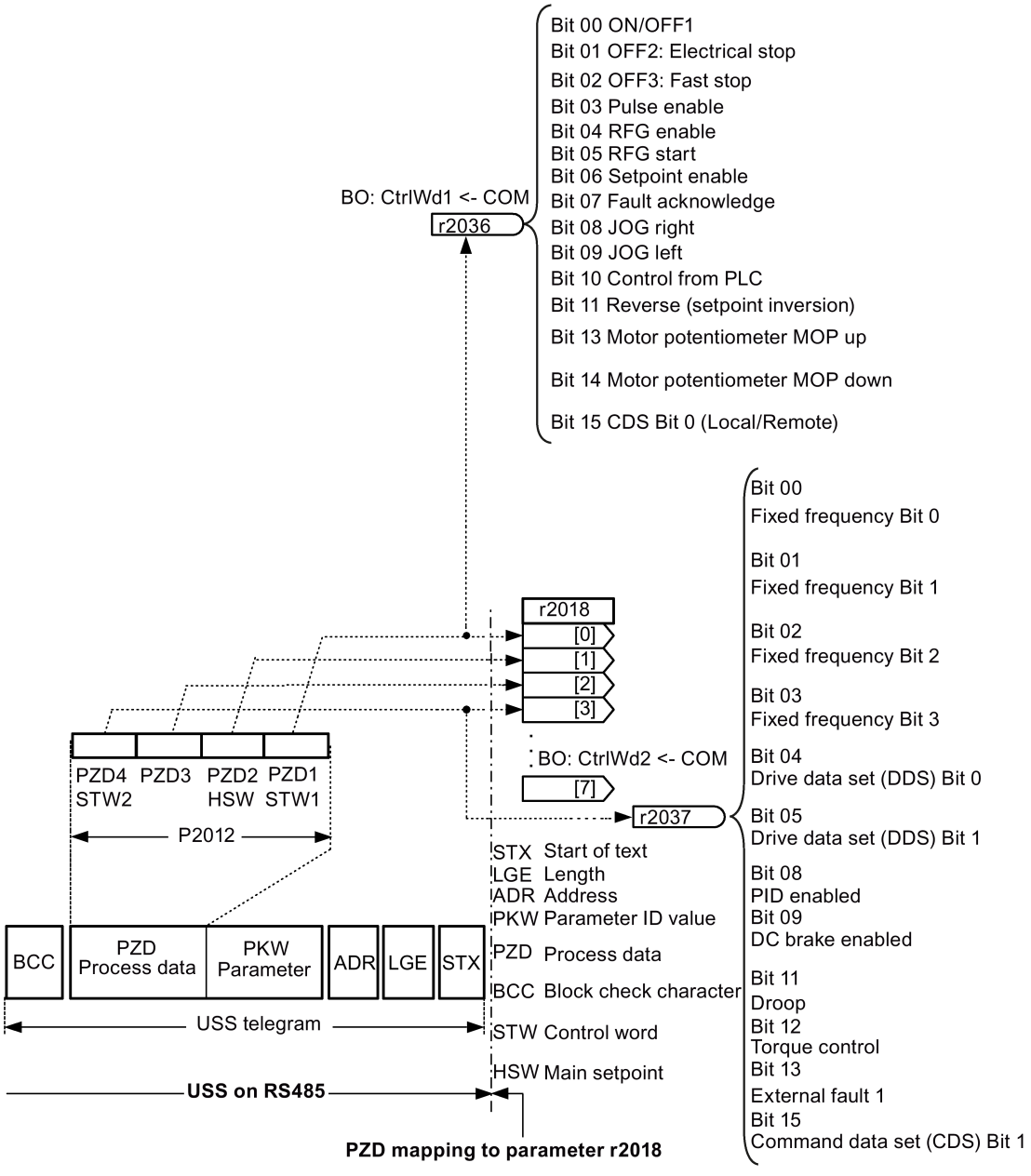 Note: Bit 10 must be set in the first PZD word of the telegram received via USS so that the converter will accept the process data as being valid. For this reason, the control word 1 must be transferred to the converter in the first PZD word.								

Parameter	Function	Range	Factory default	Can be changed	Scaling	Data set	Data type	Acc. Level
	MODBUS on RS485: 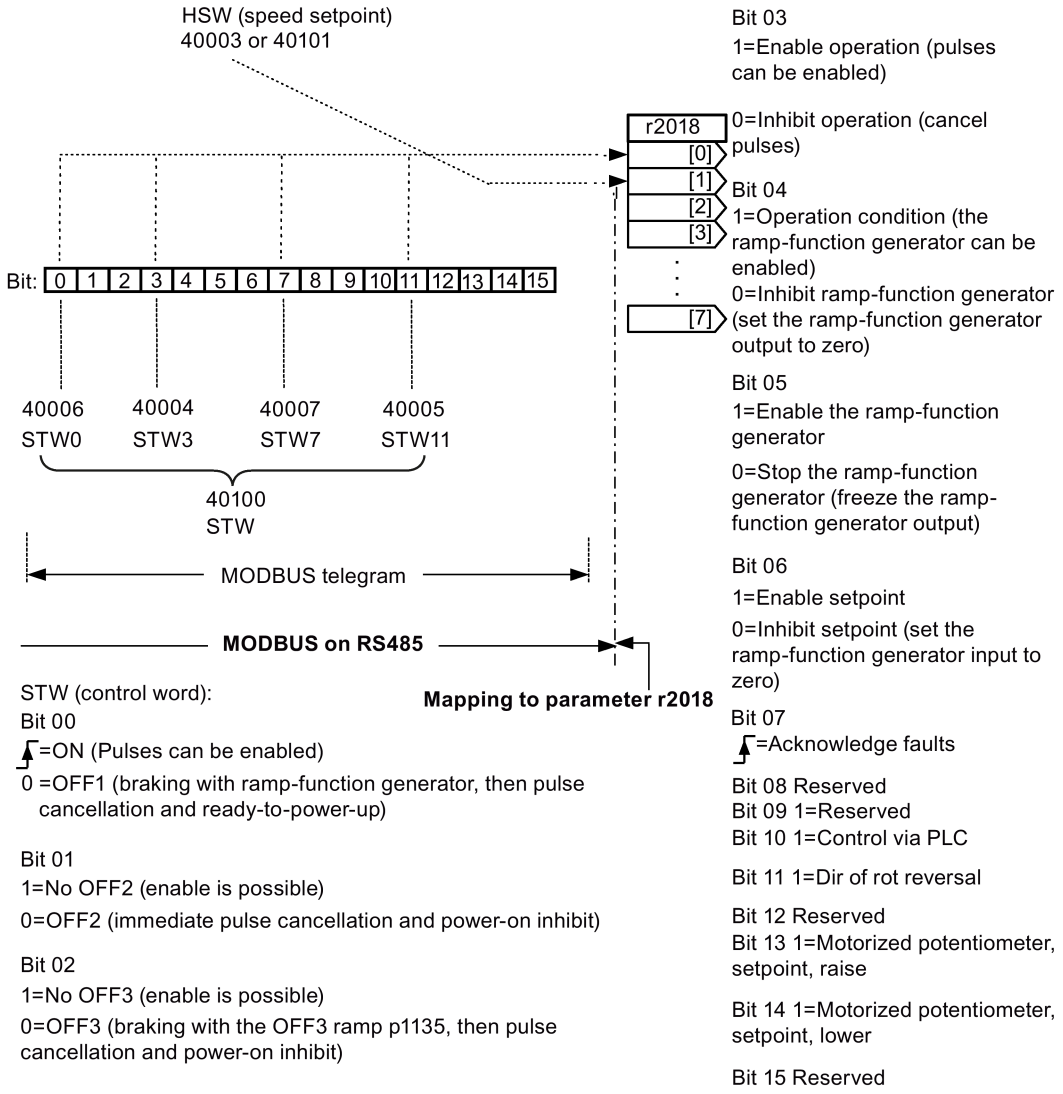							
Index:	[0]	Received word 0						
	[1]	Received word 1						
	...	...						
	[7]	Received word 7						
Note:	Restrictions: • If the above serial interface controls the inverter (P0700 or P0719) then the 1st control word must be transferred in the 1st PZD-word. • If the setpoint source is selected via P1000 or P0719, then the main setpoint must be transferred in the 2nd PZD-word. • When P2012 is greater than or equal to 4 the additional control word (2nd control word) must transferred in the 4th PZD-word, if the above serial interface controls the inverter (P0700 or P0719).							

Parameter	Function	Range	Factory default	Can be changed	Scaling	Data set	Data type	Acc. Level
P2019[0...7]	**CI: PZD to USS/MODBUS on RS485**	-	52[0]	T	4000H	-	U32/I 16	3
	Displays process data transmitted via USS/MODBUS on RS485.							
	USS on RS485: 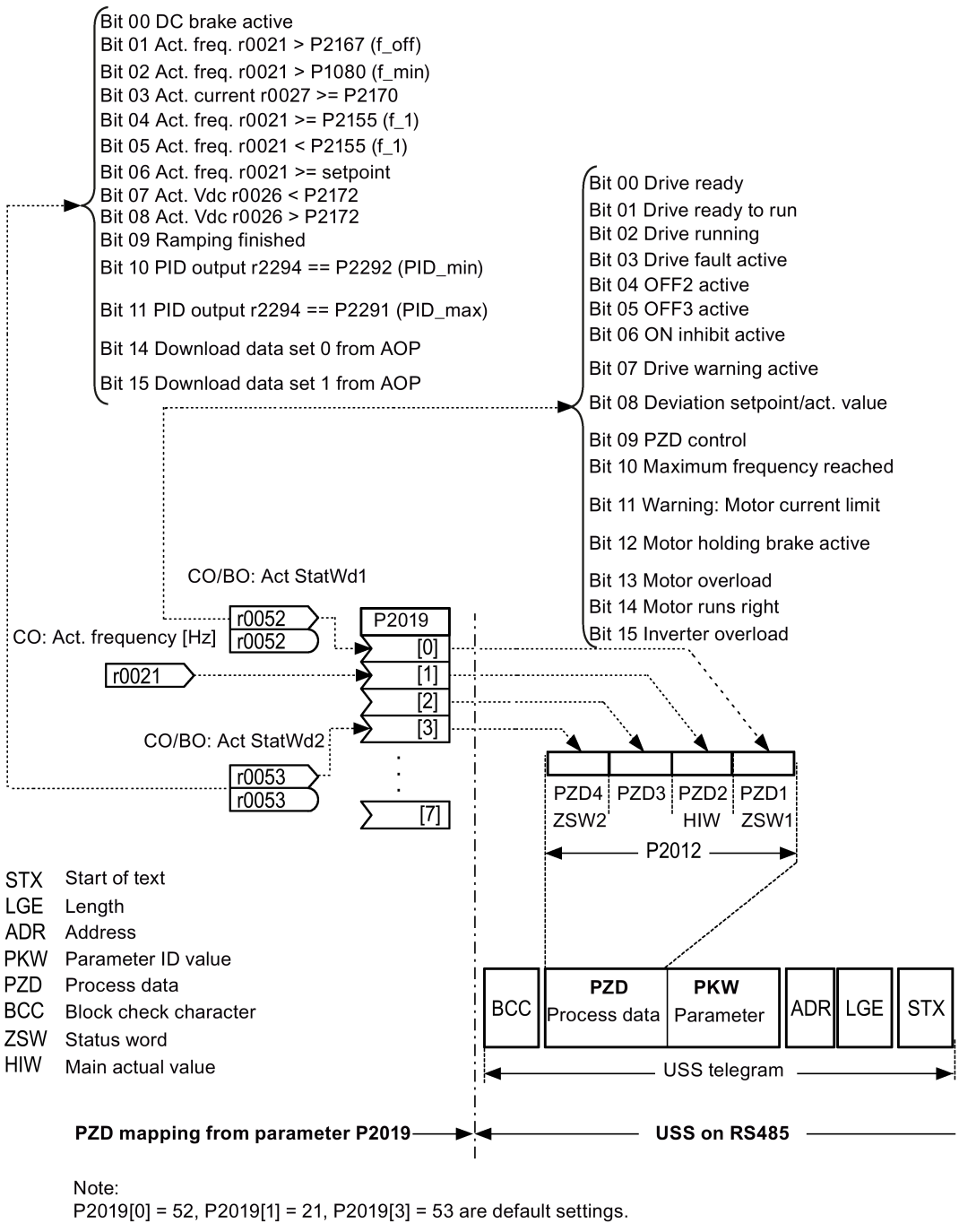 Note: P2019[0] = 52, P2019[1] = 21, P2019[3] = 53 are default settings.								

Parameter	Function	Range	Factory default	Can be changed	Scaling	Data set	Data type	Acc. Level
	MODBUS on RS485:							

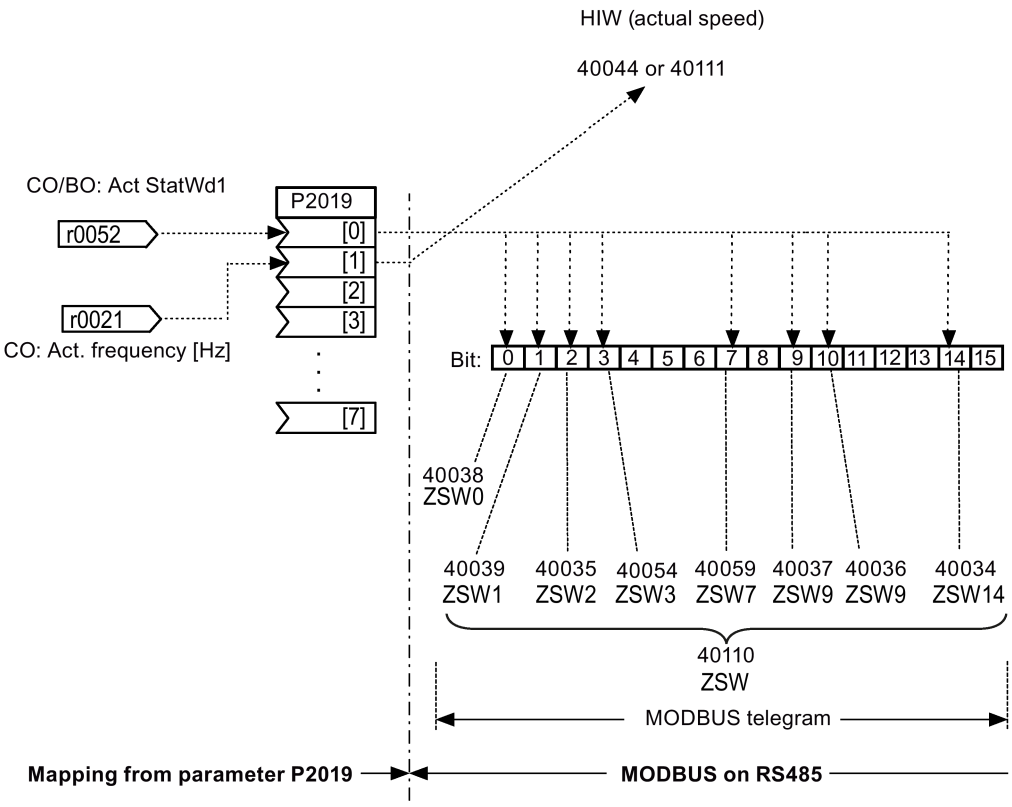

ZSW (status word):

Bit 00 1=Ready to power-up

Bit 01 1=Ready to operate (DC link loaded, pulses blocked)

Bit 02 1=Operation enabled (drive follows n_set)

Bit 03 1=Fault present

Bit 04 1=No coast down active (OFF2 inactive)

Bit 05 1=No fast stop active (OFF3 inactive)

Bit 06 1=Power-on inhibit active

Bit 07 1=Alarm present

Bit 08 1=Speed setpoint - actual value deviation within tolerance t_off

Bit 09 1=Control requested

Bit 10 1=f or n comparison value reached/exceeded

Bit 11 1=1, M, or P limit not reached

Bit 12 Reserved

Bit 13 1=No motor overtemperature alarm

Bit 14
1=Motor rotates forwards (n_act >= 0)

0=Motor rotates backwards (n_act < 0)

Bit 15 1=No alarm, thermal overload, power unit

Index:	[0]	Transmitted word 0
	[1]	Transmitted word 1
	...	...
	[7]	Transmitted word 7
Note:	If r0052 not indexed, display does not show an index (".0").	

Parameter	Function	Range	Factory default	Can be changed	Scaling	Data set	Data type	Acc. Level
P2021	**Modbus address**	1 - 247	1	T	-	-	U16	2
	Sets unique address for inverter.							
P2022	**Modbus reply timeout [ms]**	0 - 10000	1000	U, T	-	-	U16	3
	The time in which the inverter is allowed to respond to the Modbus master. If the forming of a response needs more time than specified in this parameter, the processing is done, but no response is sent.							
P2023	**RS485 protocol selection**	0 - 3	1	T	-	-	U16	1
	Select the protocol which runs on the RS485 link.							
	0	None						
	1	USS						
	2	Modbus						
	3	Script terminal						
Notice:	After changing P2023, powercycle the inverter. During the powercycle, wait until LED has gone off or the display has gone blank (may take a few seconds) before re-applying power. If P2023 has been changed via a PLC, make sure the change has been saved to EEPROM via P0971.							
r2024[0...1]	**USS/MODBUS error-free telegrams**	-	-	-	-	-	U16	3
	Displays number of error-free USS/MODBUS telegrams received.							
Index:	[0]	USS/MODBUS on RS485						
	[1]	USS on RS232 (reserved)						
Note:	The state of the telegram information on RS485 is reported regardless of the protocol set in P2023.							
r2025[0...1]	**USS/MODBUS rejected telegrams**	-	-	-	-	-	U16	3
	Displays number of USS/MODBUS telegrams rejected.							
Index:	See r2024							
Note:	See r2024							
r2026[0...1]	**USS/MODBUS character frame error**	-	-	-	-	-	U16	3
	Displays number of USS/MODBUS character frame errors.							
Index:	See r2024							
Note:	See r2024							
r2027[0...1]	**USS/MODBUS overrun error**	-	-	-	-	-	U16	3
	Displays number of USS/MODBUS with overrun error.							
Index:	See r2024							
Note:	See r2024							
r2028[0...1]	**USS/MODBUS parity error**	-	-	-	-	-	U16	3
	Displays number of USS/MODBUS telegrams with parity error.							
Index:	See r2024							
Note:	See r2024							

Parameter	Function	Range	Factory default	Can be changed	Scaling	Data set	Data type	Acc. Level
r2029[0...1]	**USS start not identified**	-	-	-	-	-	U16	3
	Displays number of USS telegrams with unidentified start.							
Index:	See r2024							
Note:	Not used on MODBUS.							
r2030[0...1]	**USS/MODBUS BCC/CRC error**	-	-	-	-	-	U16	3
	Displays number of USS/MODBUS telegrams with BCC/CRC error.							
Index:	See r2024							
Note:	See r2024							
r2031[0...1]	**USS/MODBUS length error**	-	-	-	-	-	U16	3
	Displays number of USS/MODBUS telegrams with incorrect length.							
Index:	See r2024							
Note:	See r2024							
P2034	**MODBUS parity on RS485**	0 - 2	2	U, T	-	-	U16	2
	Parity of MODBUS telegrams on RS485.							
	0	No parity						
	1	Odd parity						
	2	Even parity						
Note:	Also see P2010 for baudrate and P2035 for stop bit settings. You must set P2034 to 0 if P2035=2.							
P2035	**MODBUS stop bits on RS485**	1 - 2	1	U, T	-	-	U16	2
	Number of stop bits in MODBUS telegrams on RS485.							
	1	1 stop bit						
	2	2 stop bits						
Note:	Also see P2010 for baudrate and P2034 for parity settings. You must set P2035 to 2 if P2034=0.							
r2036.0...15	**BO: CtrlWrd1 from USS/MODBUS on RS485**	-	-	-	-	-	U16	3
	Displays control word 1 from USS/MODBUS on RS485 (i.e. word 1 within USS/MODBUS = PZD1). See r0054 for the bit field description.							
Dependency:	See P2012							
r2037.0...15	**BO: CtrlWrd2 from USS on RS485 (USS)**	-	-	-	-	-	U16	3
	Displays control word 2 from USS on RS485 (i.e. word 4 within USS = PZD4). See r0055 for the bit field description.							
Dependency:	See P2012							
Note:	To enable the external fault (r2037 bit 13) facility via USS, the following parameters must be set: • P2012 = 4 • P2106 = 1							

Parameter	Function	Range	Factory default	Can be changed	Scaling	Data set	Data type	Acc. Level
r2053[0...7]	**I/O Extension Module identification**	-	0	-	-	-	U16	3
	Displays identification data of the I/O Extension Module.							
Index:	[0]	I/O Extension Module ID number						
	[1]	I/O Extension Module firmware version number (major)						
	[2]	I/O Extension Module firmware version number (minor)						
	[3]	I/O Extension Module firmware version number (hot fix)						
	[4]	I/O Extension Module firmware version number (internal)						
	[5]	Not used						
	[6]	Not used						
	[7]	Company ID (Siemens = 42)						
r2067.0...12	**CO/BO: Digital input values status**	-	-	-	-	-	U16	3
	Displays status of digital inputs.							
	Bit	**Signal name**			**1 signal**		**0 signal**	
	00	Digital input 1			Yes		No	
	01	Digital input 2			Yes		No	
	02	Digital input 3			Yes		No	
	03	Digital input 4			Yes		No	
	04	Digital input 5			Yes		No	
	05	Digital input 6			Yes		No	
	11	Digital input AI1			Yes		No	
	12	Digital input AI2			Yes		No	
Note:	This is used for BICO connection without software intervention. The digital input 5 and 6 are provided by the optional I/O Extension Module.							
P2100[0...2]	**Alarm number selection**	0 - 65535	0	T	-	-	U16	3
	Selects up to 3 faults or warnings for non-default reactions.							
Example:	If, for example, an OFF3 is to be carried out instead of an OFF2 for a fault, the fault number has to be entered in P2100 and the desired reaction selected in P2101 (in this case (OFF3) P2101 = 3).							
Index:	[0]	Fault Number 1						
	[1]	Fault Number 2						
	[2]	Fault Number 3						
Note:	All fault codes have a default reaction to OFF2. Some fault codes caused by hardware trips (e.g. overcurrent) cannot be changed from the default reactions.							

Parameter	Function	Range	Factory default	Can be changed	Scaling	Data set	Data type	Acc. Level
P2101[0...2]	**Stop reaction value**	0 - 4	0	T	-	-	U16	3
	Sets inverter stop reaction values for faults selected by P2100 (alarm number selection). This indexed parameter specifies the special reaction to the faults/warnings defined in P2100 indices 0 to 2.							
	0	No reaction, no display						
	1	OFF1 stop reaction						
	2	OFF2 stop reaction						
	3	OFF3 stop reaction						
	4	No reaction, warning only						
Index:	[0]	Stop reaction value 1						
	[1]	Stop reaction value 2						
	[2]	Stop reaction value 3						
Note:	Settings 1 - 3 are only available for fault codes. Setting 4 is only available for warnings. Index 0 (P2101) refers to fault/warning in index 0 (P2100).							
P2103[0...2]	**BI: 1. Faults acknowl-edgement**	0 - 4294967295	722.2	T	-	CDS	U32	3
	Defines first source of fault acknowledgement.							
Setting:	722.0	Digital input 1 (requires P0701 to be set to 99, BICO)						
	722.1	Digital input 2 (requires P0702 to be set to 99, BICO)						
	722.2	Digital input 3 (requires P0703 to be set to 99, BICO)						
P2104[0...2]	**BI: 2. Faults acknowl-edgement**	0 - 4294967295	0	T	-	CDS	U32	3
	Selects second source of fault acknowledgement.							
Setting:	See P2103							
P2106[0...2]	**BI: External fault**	0 - 4294967295	1	T	-	CDS	U32	3
	Selects source of external faults.							
Setting:	See P2103							
r2110[0...3]	**CO: Warning number**	-	-	-	-	-	U16	2
	Displays warning information. A maximum of 2 active warnings (indices 0 and 1) and 2 historical warnings (indices 2 and 3) may be viewed.							
Index:	[0]	Recent Warnings --, warning 1						
	[1]	Recent Warnings --, warning 2						
	[2]	Recent Warnings -1, warning 3						
	[3]	Recent Warnings -1, warning 4						
Notice:	Indices 0 and 1 are not stored.							
Note:	The LED indicates the warning status in this case. The keypad will flash while a warning is active.							
P2111	**Total number of warnings**	0 - 4	0	T	-	-	U16	3
	Displays number of warning (up to 4) since last reset. Set to 0 to reset the warning history.							

Parameter	Function	Range	Factory default	Can be changed	Scaling	Data set	Data type	Acc. Level
P2113[0...2]	**Disable inverter warnings**	0 - 1	0	T	-	-	U16	3
	Switches off reporting of inverter warnings. Can be used in conjunction with P0503 as an adjunct to keep-running operation.							
	1	Inverter warnings disabled						
	0	Inverter warnings enabled						
Index:	[0]	Inverter data set 0 (DDS0)						
	[1]	Inverter data set 1 (DDS1)						
	[2]	Inverter data set 2 (DDS2)						
Note:	See also P0503							
r2114[0...1]	**Run time counter**	-	-	-	-	-	U16	3
	Displays run time counter. It is the total time the inverter has been powered up. When power is switched off, the value is saved, and then restored on powerup. The run time counter will be calculate as followed: Multiply the value in r2114[0] by 65536 and then add it to the value in r2114[1]. The resultant answer will be in seconds. This means that r2114[0] is not days. Total powerup time = 65536 * r2114[0] + r2114[1] seconds.							
Example:	If r2114[0] = 1 and r2114[1] = 20864 We get 1 * 65536 + 20864 = 86400 seconds which equals 1 day.							
Index:	[0]	System Time, Seconds, Upper Word						
	[1]	System Time, Seconds, Lower Word						
P2115[0...2]	**Real time clock**	0 - 65535	257	T	-	-	U16	4
	Displays real time. All inverters require an on-board clock function with which fault conditions may be time-stamped and logged. However, they have no battery backed Real Time Clock (RTC). Inverters may support a software driven RTC which requires synchronization with the RTC supplied via a serial interface. The time is stored in a word array parameter P2115. The time will be set by USS Protocol standard "word array parameter write" telegrams. Once the last word is received in index 2, the software will start running the timer itself using internal running 1 millisecond tic. Hence becoming like RTC. If power-cycle takes place, then the real time must be sent again to the inverter. Time is maintained in a word array parameter and encoded as follows - the same format will be used in fault report logs.							
	Index	High Byte (MSB)			Low Byte (LSB)			
	0	Seconds (0 - 59)			Minutes (0 - 59)			
	1	Hours (0 - 23)			Days (1 - 31)			
	2	Month (1 - 12)			Years (00 - 250)			
	The values are in binary form.							
Index:	[0]	Real Time, Seconds + Minutes						
	[1]	Real Time, Hours + Days						
	[2]	Real Time, Month + Year						
P2120	**Indication counter**	0 - 65535	0	U, T	-	-	U16	4
	Indicates total number of fault/warning events. This parameter is incremented whenever a fault/warning event occurs.							

Parameter	Function	Range	Factory default	Can be changed	Scaling	Data set	Data type	Acc. Level
P2150[0...2]	**Hysteresis frequency f_hys [Hz]**	0.00 - 10.00	3.00	U, T	-	DDS	Float	3
	Defines hysteresis level applied for comparing frequency and speed to threshold.							
Dependency:	See P1175.							
Note:	If P1175 is set, P2150 is also used to control the Dual Ramp function.							
P2151[0...2]	**CI: Speed setpoint for messages**	0 - 4294967295	1170[0]	U, T	-	DDS	U32	3
	Selects the source of setpoint frequency, actual frequency is compared with this frequency to detect frequency deviation (see monitoring bit r2197.7).							
P2155[0...2]	**Threshold frequency f_1 [Hz]**	0.00 - 550.00	30.00	U, T	-	DDS	Float	3
	Sets a threshold for comparing actual speed or frequency to threshold values f_1. This threshold controls status bits 4 and 5 in status word 2 (r0053).							
P2156[0...2]	**Delay time of threshold freq f_1 [ms]**	0 - 10000	10	U, T	-	DDS	U16	3
	Sets delay time prior to threshold frequency f_1 comparison (P2155).							
P2157[0...2]	**Threshold frequency f_2 [Hz]**	0.00 - 550.00	30.00	U, T	-	DDS	Float	2
	Threshold_2 for comparing speed or frequency to thresholds.							
Dependency:	See P1175.							
Note:	If P1175 is set, P2157 is also used to control the Dual Ramp function.							
P2158[0...2]	**Delay time of threshold freq f_2 [ms]**	0 - 10000	10	U, T	-	DDS	U16	2
	When comparing speed or frequency to threshold f_2 (P2157) this is the time delay before status bits are cleared.							
P2159[0...2]	**Threshold frequency f_3 [Hz]**	0.00 - 550.00	30.00	U, T	-	DDS	Float	2
	Threshold_3 for comparing speed or frequency to thresholds.							
Dependency:	See P1175.							
Note:	If P1175 is set, P2159 is also used to control the Dual Ramp function.							
P2160[0...2]	**Delay time of threshold freq f_3 [ms]**	0 - 10000	10	U, T	-	DDS	U16	2
	When comparing speed or frequency to threshold f_3 (P2159) this is the time delay before status bits are set.							
P2162[0...2]	**Hysteresis freq. for overspeed [Hz]**	0.00 - 25.00	3.00	U, T	-	DDS	Float	3
	Hysteresis speed (frequency) for overspeed detection. For V/f control modes the hysteresis acts below the maximum frequency.							
P2164[0...2]	**Hysteresis frequency deviation [Hz]**	0.00 - 10.00	3.00	U, T	-	DDS	Float	3
	Hysteresis frequency for detecting permitted deviation (from setpoint) or frequency or speed. This frequency controls bit 8 in status word 1 (r0052).							
P2166[0...2]	**Delay time ramp up completed [ms]**	0 - 10000	10	U, T	-	DDS	U16	3
	Delay time for signal that indicates completion of ramp-up.							

Parameter	Function	Range	Factory default	Can be changed	Scaling	Data set	Data type	Acc. Level
P2167[0...2]	**Switch-off frequency f_off [Hz]**	0.00 - 10.00	1.00	U, T	-	DDS	Float	3
	Defines the threshold of the monitoring function |f_act| > P2167 (f_off). P2167 influences following functions: • If the actual frequency falls below this threshold and the time delay has expired, bit 1 in status word 2 (r0053) is reset. • If an OFF1 or OFF3 was applied and bit 1 is reset the inverter will disable the pulse (OFF2).							
P2168[0...2]	**Delay time T_off [ms]**	0 - 10000	0	U, T	-	DDS	U16	3
	Defines time for which the inverter may operate below switch-off frequency (P2167) before switch off occurs.							
Dependency:	Active if holding brake (P1215) not parameterized.							
P2170[0...2]	**Threshold current I_thresh [%]**	0.00 - 400.0	100.0	U, T	-	DDS	Float	3
	Defines threshold current relative to P0305 (rated motor current) to be used in comparisons of I_act and I_Thresh. This threshold controls bit 3 in status word 3 (r0053).							
P2171[0...2]	**Delay time current [ms]**	0 - 10000	10	U, T	-	DDS	U16	3
	Defines delay time prior to activation of current comparison.							
P2172[0...2]	**Threshold DC-link voltage [V]**	0 - 2000	800	U, T	-	DDS	U16	3
	Defines DC link voltage to be compared to actual voltage. This voltage controls bits 7 and 8 in status word 3 (r0053).							
P2173[0...2]	**Delay time DC-link voltage [ms]**	0 - 10000	10	U, T	-	DDS	U16	3
	Defines delay time prior to activation of threshold comparison.							
P2177[0...2]	**Delay time for motor is blocked [ms]**	0 - 10000	10	U, T	-	DDS	U16	3
	Delay time for identifying that the motor is blocked.							
P2179	**Current limit for no load identified [%]**	0.00 - 10.0	3.0	U, T	-	-	Float	3
	Threshold current for A922 (no load applied to inverter) relative to P0305 (rated motor current).							
Notice:	If a motor setpoint cannot be entered and the current limit (P2179) is not exceeded, warning A922 (no load applied) is issued when delay time (P2180) expires.							
Note:	It may be that the motor is not connected or a phase could be missing.							
P2180	**Delay time for no-load detection [ms]**	0 - 10000	2000	U, T	-	-	U16	3
	Delay time for detecting a missing output load.							

Parameter	Function	Range	Factory default	Can be changed	Scaling	Data set	Data type	Acc. Level
P2181[0...2]	**Load monitoring mode**	0 - 6	0	T	-	DDS	U16	3
	Sets load monitoring mode. This function allows monitoring of mechanical failure of the inverter train, e.g. a broken inverter belt. It can also detect conditions which cause an overload, such as a jam. P2182 -P2190 are set to the following values when this parameter is changed from 0. P2182 = P1080 (Fmin) P2183 = P1082 (Fmax) * 0.8 P2184 = P1082 (Fmax) P2185 = r0333 (rated motor torque) * 1.1 P2186 = 0 P2187 = r0333 (rated motor torque) * 1.1 P2188 = 0 P2189 = r0333 (rated motor torque) * 1.1 P2190 = r0333 (rated motor torque)/2 This is achieved by comparing the actual frequency/torque curve with a programmed envelope (see P2182 - P2190). If the curve falls outside the envelope, a warning A952 or trip F452 is generated.							
	0	Load monitoring disabled						
	1	Warning: Low torque/frequency						
	2	Warning: High torque/frequency						
	3	Warning: High/low torque/frequency						
	4	Trip: Low torque/frequency						
	5	Trip: High torque/frequency						
	6	Trip: High/low torque/frequency						
P2182[0...2]	**Load monitoring threshold frequency 1 [Hz]**	0.00 - 550.00	5.00	U, T	-	DDS	Float	3
	Sets the lower frequency threshold f_1 for defining the area where the load monitoring is effective. The frequency torque envelope is defined by 9 parameters - 3 are frequency parameters (P2182 - P2184), and the other 6 define the low and high torque limits (P2185 - P2190) for each frequency.							
Dependency:	See P2181 for calculated default value.							
Note:	Below the threshold in P2182 and above the threshold in P2184, the load monitoring mode is not active. In this case the values for normal operation with the torque limits given in P1521 and P1520 are valid.							
P2183[0...2]	**Load monitoring threshold frequency 2 [Hz]**	0.00 - 550.00	30.00	U, T	-	DDS	Float	3
	Sets the frequency threshold f_2 for defining the envelope in which the torque values are valid. See P2182.							
Dependency:	See P2181 for calculated default value.							
P2184[0...2]	**Load monitoring threshold frequency 3 [Hz]**	0.00 - 550.00	50.00	U, T	-	DDS	Float	3
	Sets the upper frequency threshold f_3 for defining the area where the load monitoring is effective. See P2182.							
Dependency:	See P2181 for calculated default value.							

Parameter	Function	Range	Factory default	Can be changed	Scaling	Data set	Data type	Acc. Level
P2185[0...2]	**Upper torque threshold 1 [Nm]**	0.0 - 99999.0	Value in r0333	U, T	-	DDS	Float	3
	Upper limit threshold value 1 for comparing actual torque.							
Dependency:	This parameter is influenced by automatic calculations defined by P0340. See P2181 for calculated default value.							
Note:	The factory setting depends on rating data of Power Module and Motor.							
P2186[0...2]	**Lower torque threshold 1 [Nm]**	0.0 - 99999.0	0.0	U, T	-	DDS	Float	3
	Lower limit threshold value 1 for comparing actual torque.							
Dependency:	See P2181 for calculated default value.							
P2187[0...2]	**Upper torque threshold 2 [Nm]**	0.0 - 99999.0	Value in r0333	U, T	-	DDS	Float	3
	Upper limit threshold value 2 for comparing actual torque.							
Dependency:	This parameter is influenced by automatic calculations defined by P0340. See P2181 for calculated default value.							
Note:	See P2185							
P2188[0...2]	**Lower torque threshold 2 [Nm]**	0.0 - 99999.0	0.0	U, T	-	DDS	Float	3
	Lower limit threshold value 2 for comparing actual torque.							
Dependency:	See P2181 for calculated default value.							
P2189[0...2]	**Upper torque threshold 3 [Nm]**	0.0 - 99999.0	Value in r0333	U, T	-	DDS	Float	3
	Upper limit threshold value 3 for comparing actual torque.							
Dependency:	This parameter is influenced by automatic calculations defined by P0340. See P2181 for calculated default value.							
Note:	See P2185							
P2190[0...2]	**Lower torque threshold 3 [Nm]**	0.0 - 99999.0	0.0	U, T	-	DDS	Float	3
	Lower limit threshold value 3 for comparing actual torque.							
Dependency:	See P2181 for calculated default value.							
P2192[0...2]	**Load monitoring delay time [s]**	0 - 65	10	U, T	-	DDS	U16	3
	P2192 defines a delay before warning/trip becomes active. - It is used to eliminate events caused by transient conditions. - It is used for both methods of fault detection.							
r2197.0...12	**CO/BO: Monitoring word 1**	-	-	-	-	-	U16	3
	Monitoring word 1 which indicates the state of monitor functions. Each bit represents one monitor function.							

	Bit	Signal name	1 signal	0 signal
	00	|f_act| <= P1080 (f_min)	Yes	No
	01	|f_act| <= P2155 (f_1)	Yes	No
	02	|f_act| > P2155 (f_1)	Yes	No
	03	f_act >= zero	Yes	No

Parameter	Function		Range	Factory default	Can be changed	Scaling	Data set	Data type	Acc. Level
	04	f_act >= setp. (f_set)				Yes		No	
	05	|f_act| <= P2167 (f_off)				Yes		No	
	06	|f_act| >= P1082 (f_max)				Yes		No	
	07	f_act == setp. (f_set)				Yes		No	
	08	Act. current |r0027| >= P2170				Yes		No	
	09	Act. unfilt. Vdc < P2172				Yes		No	
	10	Act. unfilt. Vdc > P2172				Yes		No	
	11	Output load is not present				Yes		No	
	12	|f_act| > P1082 with delay				Yes		No	
r2198.0...12	**CO/BO: Monitoring word 2**		-	-	-	-	-	U16	3
	Monitoring word 2 which indicates the state of monitor functions. Each bit represents one monitor function.								
	Bit	**Signal name**				**1 signal**		**0 signal**	
	00	|f_act| <= P2157 (f_2)				Yes		No	
	01	|f_act| > P2157 (f_2)				Yes		No	
	02	|f_act| <= P2159 (f_3)				Yes		No	
	03	|f_act| > P2159 (f_3)				Yes		No	
	04	Unused				Yes		No	
	05	f_set > 0				Yes		No	
	06	Motor blocked				Yes		No	
	07	Motor pulled out				Yes		No	
	08	I_act |r0068| < P2170				Yes		No	
	09	|m_act| > P2174 & setpoint reached				Yes		No	
	10	|m_act| > P2174				Yes		No	
	11	Load monitoring signals an alarm				Yes		No	
	12	Load monitoring signals a fault				Yes		No	
P2200[0...2]	**BI: Enable PID controller**		0 - 4294967295	0	U, T	-	CDS	U32	2
	Allows user to enable/disable the PID controller. Setting to 1 enables the PID closed-loop controller.								
Dependency:	Setting 1 automatically disables normal ramp times set in P1120 and P1121 and the normal frequency setpoints. Following an OFF1 or OFF3 command, however, the inverter frequency will ramp down to zero using the ramp time set in P1121 (P1135 for OFF3).								
Notice:	The minimum and maximum motor frequencies (P1080 and P1082) as well as the skip frequencies (P1091 to P1094) remain active on the inverter output. However, enabling skip frequencies with PID control can produce instabilities.								
Note:	The PID setpoint source is selected using P2253. The PID setpoint and the PID feedback signal are interpreted as [%] values (not [Hz]). The output of the PID controller is displayed as [%] and then normalized into [Hz] through P2000 (reference frequency) when PID is enabled. The reverse command is not active when PID is active. Attention: P2200 and P2803 are locked parameter against each other. PID and FFB of the same data set cannot be active at same time.								

Parameter	Function	Range	Factory default	Can be changed	Scaling	Data set	Data type	Acc. Level
P2201[0...2]	**Fixed PID setpoint 1 [%]**	-200.00 - 200.00	10.00	U, T	-	DDS	Float	2
	Defines fixed PID setpoint 1. There are 2 types of fixed frequencies: 1. Direct selection (P2216 = 1): – In this mode of operation 1 Fixed Frequency selector (P2220 to P2223) selects 1 fixed frequency. – If several inputs are active together, the selected frequencies are summed. E.g.: PID-FF1 + PID-FF2 + PID-FF3 + PID-FF4. 2. Binary coded selection (P2216 = 2): – Up to 16 different fixed frequency values can be selected using this method.							
Dependency:	P2200 = 1 required in user access level 2 to enable setpoint source.							
Note:	You may mix different types of frequencies; however, remember that they will be summed if selected together. P2201 = 100 % corresponds to 4000 hex.							
P2202[0...2]	**Fixed PID setpoint 2 [%]**	-200.00 - 200.00	20.00	U, T	-	DDS	Float	2
	Defines fixed PID setpoint 2.							
Note:	See P2201							
P2203[0...2]	**Fixed PID setpoint 3 [%]**	-200.00 - 200.00	50.00	U, T	-	DDS	Float	2
	Defines fixed PID setpoint 3.							
Note:	See P2201							
P2204[0...2]	**Fixed PID setpoint 4 [%]**	-200.00 - 200.00	100.00	U, T	-	DDS	Float	2
	Defines fixed PID setpoint 4.							
Note:	See P2201							
P2205[0...2]	**Fixed PID setpoint 5 [%]**	-200.00 - 200.00	0.00	U, T	-	DDS	Float	2
	Defines fixed PID setpoint 5.							
Note:	See P2201							
P2206[0...2]	**Fixed PID setpoint 6 [%]**	-200.00 - 200.00	0.00	U, T	-	DDS	Float	2
	Defines fixed PID setpoint 6.							
Note:	See P2201							
P2207[0...2]	**Fixed PID setpoint 7 [%]**	-200.00 - 200.00	0.00	U, T	-	DDS	Float	2
	Defines fixed PID setpoint 7.							
Note:	See P2201							
P2208[0...2]	**Fixed PID setpoint 8 [%]**	-200.00 - 200.00	0.00	U, T	-	DDS	Float	2
	Defines fixed PID setpoint 8.							
Note:	See P2201							

Parameter	Function	Range	Factory default	Can be changed	Scaling	Data set	Data type	Acc. Level
P2209[0...2]	**Fixed PID setpoint 9 [%]**	-200.00 - 200.00	0.00	U, T	-	DDS	Float	2
	Defines fixed PID setpoint 9.							
Note:	See P2201							
P2210[0...2]	**Fixed PID setpoint 10 [%]**	-200.00 - 200.00	0.00	U, T	-	DDS	Float	2
	Defines fixed PID setpoint 10.							
Note:	See P2201							
P2211[0...2]	**Fixed PID setpoint 11 [%]**	-200.00 - 200.00	0.00	U, T	-	DDS	Float	2
	Defines fixed PID setpoint 11.							
Note:	See P2201							
P2212[0...2]	**Fixed PID setpoint 12 [%]**	-200.00 - 200.00	0.00	U, T	-	DDS	Float	2
	Defines fixed PID setpoint 12.							
Note:	See P2201							
P2213[0...2]	**Fixed PID setpoint 13 [%]**	-200.00 - 200.00	0.00	U, T	-	DDS	Float	2
	Defines fixed PID setpoint 13.							
Note:	See P2201							
P2214[0...2]	**Fixed PID setpoint 14 [%]**	-200.00 - 200.00	0.00	U, T	-	DDS	Float	2
	Defines fixed PID setpoint 14.							
Note:	See P2201							
P2215[0...2]	**Fixed PID setpoint 15 [%]**	-200.00 - 200.00	0.00	U, T	-	DDS	Float	2
	Defines fixed PID setpoint 15.							
Note:	See P2201							
P2216[0...2]	**Fixed PID setpoint mode**	1 - 2	1	T	-	DDS	U16	2
	Fixed frequencies for PID setpoint can be selected in two different modes. P2216 defines the mode.							
	1	Direct selection						
	2	Binary selection						
P2220[0...2]	**BI: Fixed PID setpoint select bit 0**	0 - 4294967295	722.3	T	-	CDS	U32	3
	Defines command source of fixed PID setpoint selection bit 0.							
P2221[0...2]	**BI: Fixed PID setpoint select bit 1**	0 - 4294967295	722.4	T	-	CDS	U32	3
	Defines command source of fixed PID setpoint selection bit 1.							
P2222[0...2]	**BI: Fixed PID setpoint select bit 2**	0 - 4294967295	722.5	T	-	CDS	U32	3
	Defines command source of fixed PID setpoint selection bit 2.							

Parameter	Function	Range	Factory default	Can be changed	Scaling	Data set	Data type	Acc. Level
P2223[0...2]	**BI: Fixed PID setpoint select bit 3**	0 - 4294967295	722.6	T	-	CDS	U32	3
	Defines command source of fixed PID setpoint selection bit 3.							
r2224	**CO: Actual fixed PID setpoint [%]**	-	-	-	-	-	Float	2
	Displays total output of PID fixed setpoint selection.							
Note:	r2224 = 100 % corresponds to 4000 hex.							
r2225.0	**BO: PID fixed frequency status**	-	-	-	-	-	U16	3
	Displays the status of PID fixed frequencies.							
	Bit	**Signal name**			**1 signal**		**0 signal**	
	00	Status of FF			Yes		No	
P2231[0...2]	**PID-MOP mode**	0 - 3	0	U, T	-	DDS	U16	2
	PID-MOP mode specification							
	Bit	**Signal name**			**1 signal**		**0 signal**	
	00	Setpoint store active			Yes		No	
	01	No On-state for MOP necessary			Yes		No	
Note:	Defines the operation mode of the motorized potentiometer. See P2240.							
P2232	**Inhibit reverse direction of PID-MOP**	0 - 1	1	T	-	-	U16	2
	Inhibits reverse setpoint selection of the PID-MOP.							
	0	Reverse direction is allowed						
	1	Reverse direction inhibited						
Note:	Setting 0 enables a change of motor direction using the motor potentiometer setpoint (increase/decrease frequency).							
P2235[0...2]	**BI: Enable PID-MOP (UP-cmd)**	0 - 4294967295	0	T	-	CDS	U32	3
	Defines source of UP command.							
Dependency:	To change setpoint: - Configure a digital input as source - Use UP/DOWN key on operator panel.							
Notice:	If this command is enabled by short pulses of less than 1 second, the frequency is changed in steps of 0.2 % (P0310). When the signal is enabled longer than 1 second the ramp generator accelerates with the rate of P2247.							
P2236[0...2]	**BI: Enable PID-MOP (DOWN-cmd)**	0 - 4294967295	0	T	-	CDS	U32	3
	Defines source of DOWN command.							
Dependency:	See P2235							
Notice:	If this command is enabled by short pulses of less than 1 second, the frequency is changed in steps of 0.2 % (P0310). When the signal is enabled longer than 1 second the ramp generator decelerates with the rate of P2248.							

Parameter	Function	Range	Factory default	Can be changed	Scaling	Data set	Data type	Acc. Level
P2240[0...2]	**Setpoint of PID-MOP [%]**	-200.00 - 200.00	10.00	U, T	-	DDS	Float	2
	Setpoint of the motor potentiometer. Allows user to set a digital PID setpoint in [%].							
Note:	P2240 = 100 % corresponds to 4000 hex. The start value gets active (for the MOP output) only at the start of the MOP. P2231 influences the start value behavior as follows: • P2231 = 0: P2240 gets immediately active in the OFF-state and when changed in the ON-state, it gets active after the next OFF and ON cycle. • P2231 = 1: The last MOP output before stop is stored as starting value, since storing is selected, so a change of P2240 while in ON-state has no effect. In OFF-state P2240 can be changed. • P2231 = 2: The MOP is active every time, so the change of P2240 affects after the next power-cycle or a change of P2231 to 0. • P2231 = 3: The last MOP output before power down is stored as starting value, since the MOP is active independent from the ON-command, a change of P2240 has only effect in the case of a change of P2231.							
P2241[0...2]	**BI: PID-MOP select setpoint auto/manu**	0 - 4294967295	0	T	-	CDS	U32	3
	Sets the signal source to change over from manual to automatic mode. If using the motorized potentiometer in the manual mode the setpoint is changed using two signals for up and down, e.g. P2235 and P2236. If using the automatic mode the setpoint must be interconnected via the connector input (P2242). 0: manually 1: automatically							
Notice:	Refer to: P2235, P1036, P2242							
P2242[0...2]	**CI: PID-MOP auto setpoint**	0 - 4294967295	0	T	-	CDS	U32	3
	Sets the signal source for the setpoint of the motorized potentiometer if automatic mode P2241 is selected.							
Notice:	Refer to: P2241							
P2243[0...2]	**BI: PID-MOP accept rampgenerator setpoint**	0 - 4294967295	0	T	-	CDS	U32	3
	Sets the signal source for the setting command to accept the setting value for the motorized potentiometer. The value becomes effective for a 0/1 edge of the setting command.							
Notice:	Refer to: P2244							
P2244[0...2]	**CI: PID-MOP rampgenerator setpoint**	0 - 4294967295	0	T	-	CDS	U32	3
	Sets the signal source for the setpoint value for the MOP. The value becomes effective for a 0/1 edge of the setting command.							
Notice:	Refer to: P2243							

Parameter	Function	Range	Factory default	Can be changed	Scaling	Data set	Data type	Acc. Level
r2245	**CO: PID-MOP input frequency of the RFG [%]**	-	-	-	-	-	Float	3
	Displays the motorized potentiometer setpoint before it passed the PID-MOP RFG.							
P2247[0...2]	**PID-MOP ramp-up time of the RFG [s]**	0.00 - 1000.0	10.00	U, T	-	DDS	Float	2
	Sets the ramp-up time for the internal PID-MOP ramp-function generator. The setpoint is changed from zero up to limit defined in P1082 within this time.							
Notice:	Refer to: P2248, P1082							
P2248[0...2]	**PID-MOP ramp-down time of the RFG [s]**	0.00 - 1000.0	10.00	U, T	-	DDS	Float	2
	Sets the ramp-down time for the internal PID-MOP ramp-function generator. The setpoint is changed from limit defined in P1082 down to zero within this time.							
Notice:	Refer to: P2247, P1082							
r2250	**CO: Output setpoint of PID-MOP [%]**	-	-	-	PERCENT	-	Float	2
	Displays output setpoint of motor potentiometer.							
P2251	**PID mode**	0 - 1	0	T	-	-	U16	3
	Enables function of PID controller.							
	0	PID as setpoint						
	1	PID as trim						
Dependency:	Active when PID loop is enabled (see P2200).							
P2253[0...2]	**CI: PID setpoint**	0 - 4294967295	0	U, T	4000H	CDS	U32	2
	Defines setpoint source for PID setpoint input. This parameter allows the user to select the source of the PID setpoint. Normally, a digital setpoint is selected either using a fixed PID setpoint or an active setpoint.							
P2254[0...2]	**CI: PID trim source**	0 - 4294967295	0	U, T	4000H	CDS	U32	3
	Selects trim source for PID setpoint. This signal is multiplied by the trim gain and added to the PID setpoint.							
Setting:	755	Analog input 1						
	2224	Fixed PI setpoint (see P2201 to P2207)						
	2250	Active PI setpoint (see P2240)						
P2255	**PID setpoint gain factor**	0.00 - 100.00	100.00	U, T	-	-	Float	3
	Gain factor for PID setpoint. The PID setpoint input is multiplied by this gain factor to produce a suitable ratio between setpoint and trim.							
P2256	**PID trim gain factor**	0.00 - 100.00	100.00	U, T	-	-	Float	3
	Gain factor for PID trim. This gain factor scales the trim signal, which is added to the main PID setpoint.							
P2257	**Ramp-up time for PID setpoint [s]**	0.00 - 650.00	1.00	U, T	-	-	Float	2
	Sets the ramp-up time for the PID setpoint.							
Dependency:	P2200 = 1 (PID control is enabled) disables normal ramp-up time (P1120). PID ramp time is effective only on PID setpoint and active only when PID setpoint is changed or when RUN command is given (when PID setpoint uses this ramp to reach its value from 0%).							
Notice:	Setting the ramp-up time too short may cause the inverter to trip, on overcurrent for example.							

Parameter	Function	Range	Factory default	Can be changed	Scaling	Data set	Data type	Acc. Level
P2258	**Ramp-down time for PID setpoint [s]**	0.00 - 650.00	1.00	U, T	-	-	Float	2
	Sets ramp-down time for PID setpoint.							
Dependency:	P2200 = 1 (PID control is enabled) disables normal ramp-down time (P1121). PID setpoint ramp effective only on PID setpoint changes. P1121 (ramp-down time) and P1135 (OFF3 ramp-down time) define the ramp times used after OFF1 and OFF3 respectively.							
Notice:	Setting the ramp-down time too short can cause the inverter to trip on overvoltage F2/overcurrent F1.							
r2260	**CO: PID setpoint after PID-RFG [%]**	-	-	-	-	-	Float	2
	Displays total active PID setpoint after PID-RFG.							
Note:	r2260 = 100 % corresponds to 4000 hex.							
P2261	**PID setpoint filter time constant [s]**	0.00 - 60.00	0.00	U, T	-	-	Float	3
	Sets a time constant for smoothing the PID setpoint.							
Note:	P2261 = 0 = no smoothing.							
r2262	**CO: Filtered PID setpoint after RFG [%]**	-	-	-	-	-	Float	3
	Displays filtered PID setpoint after PID-RFG. r2262 is the result of the value in r2260, filtered with PT1-Filter and the time constant given in P2261.							
Note:	r2262 = 100 % corresponds to 4000 hex.							
P2263	**PID controller type**	0 - 1	0	T	-	-	U16	3
	Sets the PID controller type.							
	0	D component on feedback signal						
	1	D component on error signal						
P2264[0...2]	**CI: PID feedback**	0 - 4294967295	0	U, T	4000H	CDS	U32	2
	Selects the source of the PID feedback signal.							
Setting:	See P2254							
Note:	When analog input is selected, offset and gain can be implemented using P0756 to P0760 (analog input scaling).							
P2265	**PID feedback filter time constant [s]**	0.00 - 60.00	0.00	U, T	-	-	Float	2
	Defines time constant for PID feedback filter.							
r2266	**CO: PID filtered feedback [%]**	-	-	-	-	-	Float	2
	Displays PID feedback signal.							
Note:	r2266 = 100 % corresponds to 4000 hex.							
P2267	**Maximum value for PID feedback [%]**	-200.00 - 200.00	100.00	U, T	-	-	Float	3
	Sets the upper limit for the value of the feedback signal.							
Notice:	When PID is enabled (P2200 = 1) and the signal rises above this value, the inverter will trip with F222.							
Note:	P2267 = 100 % corresponds to 4000 hex.							

Parameter	Function	Range	Factory default	Can be changed	Scaling	Data set	Data type	Acc. Level
P2268	**Minimum value for PID feedback [%]**	-200.00 - 200.00	0.00	U, T	-	-	Float	3
	Sets lower limit for value of feedback signal.							
Notice:	When PID is enabled (P2200 = 1) and the signal drops below this value, the inverter will trip with F221.							
Note:	P2268 = 100 % corresponds to 4000 hex.							
P2269	**Gain applied to PID feedback**	0.00 - 500.00	100.00	U, T	-	-	Float	3
	Allows the user to scale the PID feedback as a percentage value. A gain of 100.0 % means that feedback signal has not changed from its default value.							
P2270	**PID feedback function selector**	0 - 3	0	U, T	-	-	U16	3
	Applies mathematical functions to the PID feedback signal, allowing multiplication of the result by P2269.							
	0	Disabled						
	1	Square root (root(x))						
	2	Square (x*x)						
	3	Cube (x*x*x)						
P2271	**PID transducer type**	0 - 1	0	U, T	-	-	U16	2
	Allows the user to select the transducer type for the PID feedback signal.							
	0	Disabled						
	1	Inversion of PID feedback signal						
Notice:	It is essential that you select the correct transducer type. If you are unsure whether 0 or 1 is applicable, you can determine the correct type as follows: 1. Disable the PID function (P2200 = 0). 2. Increase the motor frequency while measuring the feedback signal. 3. If the feedback signal increases with an increase in motor frequency, the PID transducer type should be 0. 4. If the feedback signal decreases with an increase in motor frequency the PID transducer type should be set to 1.							
r2272	**CO: PID scaled feedback [%]**	-	-	-	-	-	Float	2
	Displays PID scaled feedback signal.							
Note:	r2272 = 100 % corresponds to 4000 hex.							
r2273	**CO: PID error [%]**	-	-	-	-	-	Float	2
	Displays PID error (difference) signal between setpoint and feedback signals.							
Note:	r2273 = 100 % corresponds to 4000 hex.							
P2274	**PID derivative time [s]**	0.000 - 60.000	0.000	U, T	-	-	Float	2
	Sets PID derivative time. P2274 = 0: The derivative term does not have any effect (it applies a gain of 1).							
P2280	**PID proportional gain**	0.000 - 65.000	3.000	U, T	-	-	Float	2
	Allows user to set proportional gain for PID controller. The PID controller is implemented using the standard model. For best results, enable both P and I terms.							
Dependency:	P2280 = 0 (P term of PID = 0): The I term acts on the square of the error signal. P2285 = 0 (I term of PID = 0): PID controller acts as a P or PD controller respectively.							
Note:	If the system is prone to sudden step changes in the feedback signal, P term should normally be set to a small value (0.5) with a faster I term for optimum performance.							

Parameter	Function	Range	Factory default	Can be changed	Scaling	Data set	Data type	Acc. Level
P2285	**PID integral time [s]**	0.000 - 60.000	0.000	U, T	-	-	Float	2
	Sets integral time constant for PID controller.							
Note:	See P2280							
P2291	**PID output upper limit [%]**	-200.00 - 200.00	100.00	U, T	-	-	Float	2
	Sets upper limit for PID controller output							
Dependency:	If f_max (P1082) is greater than P2000 (reference frequency), either P2000 or P2291 (PID output upper limit) must be changed to achieve f_max.							
Note:	P2291 = 100 % corresponds to 4000 hex (as defined by P2000 (reference frequency)).							
P2292	**PID output lower limit [%]**	-200.00 - 200.00	0.00	U, T	-	-	Float	2
	Sets lower limit for the PID controller output.							
Dependency:	A negative value allows bipolar operation of PID controller.							
Note:	P2292 = 100 % corresponds to 4000 hex.							
P2293	**Ramp-up/-down time of PID limit [s]**	0.00 - 100.00	1.00	U, T	-	-	Float	3
	Sets maximum ramp rate on output of PID. When PI is enabled, the output limits are ramped up from 0 to the limits set in P2291 (PID output upper limit) and P2292 (PID output lower limit). Limits prevent large step changes appearing on the output of the PID when the inverter is started. Once the limits have been reached, the PID controller output is instantaneous. These ramp times are used whenever a RUN command is issued.							
Note:	If an OFF1 or OFF 3 are issued, the inverter output frequency ramps down as set in P1121 (ramp-down time) or P1135 (OFF3 ramp-down time).							
r2294	**CO: Actual PID output [%]**	-	-	-	-	-	Float	2
	Displays PID output.							
Note:	r2294 = 100 % corresponds to 4000 hex.							
P2295	**Gain applied to PID output**	-100.00 - 100.00	100.00	U, T	-	-	Float	3
	Allows the user to scale the PID output as a percentage value. A gain of 100.0 % means that output signal has not changed from its default value.							
Note:	The ramp rate applied by the PID controller is clamped to a rate of 0.1s/100% to protect the inverter.							
r2349	**CO/BO: PID status word**	-	0	-	-	-	U16	3
	Displays PID status word.							
	Bit	**Signal name**			**1 signal**		**0 signal**	
	00	PID disabled			Yes		No	
	01	PID limit reached			Yes		No	

Parameter	Function	Range	Factory default	Can be changed	Scaling	Data set	Data type	Acc. Level
P2350	**PID autotune enable**	0 - 4	0	U, T	-	-	U16	2
	Enables autotune function of PID controller.							
	0	PID autotuning disabled						
	1	PID autotuning via Ziegler Nichols (ZN) standard						
	2	PID autotuning as 1 plus some overshoot (O/S)						
	3	PID autotuning as 2 little or no overshoot (O/S)						
	4	PID autotuning PI only, quarter damped response						
Dependency:	Active when PID loop is enabled (see P2200).							
Note:	• P2350 = 1 This is the standard Ziegler Nichols (ZN) tuning which should be a quarter damped response to a step. • P2350 = 2 This tuning will give some overshoot (O/S) but should be faster than option 1. • P2350 = 3 This tuning should give little or no overshoot but will not be as fast as option 2. • P2350 = 4 This tuning only changes values of P and I and should be a quarter damped response. The option to be selected depends on the application but broadly speaking option 1 will give a good response, whereas if a faster response is desired option 2 should be selected. If no overshoot is desired then option 3 is the choice. For cases where no D term is wanted then option 4 can be selected. The tuning procedure is the same for all options. It is just the calculation of P and D values that is different. After autotune this parameter is set to zero (autotune completed).							
P2354	**PID tuning timeout length [s]**	60 - 65000	240	U, T	-	-	U16	3
	This parameter determines the time that the autotuning code will wait before aborting a tuning run if no oscillation has been obtained.							
P2355	**PID tuning offset [%]**	0.00 - 20.00	5.00	U, T	-	-	Float	3
	Sets applied offset and deviation for PID autotuning.							
Note:	This can be varied depending on plant conditions e.g. a very long system time constant might require a larger value.							

Parameter	Function	Range	Factory default	Can be changed	Scaling	Data set	Data type	Acc. Level
P2360[0...2]	**Enable cavitation protection**	0 - 2	0	U, T	-	DDS	U16	2
	Cavitation protection enabled. Will generate a fault/warning when cavitation conditions are deemed to be present. 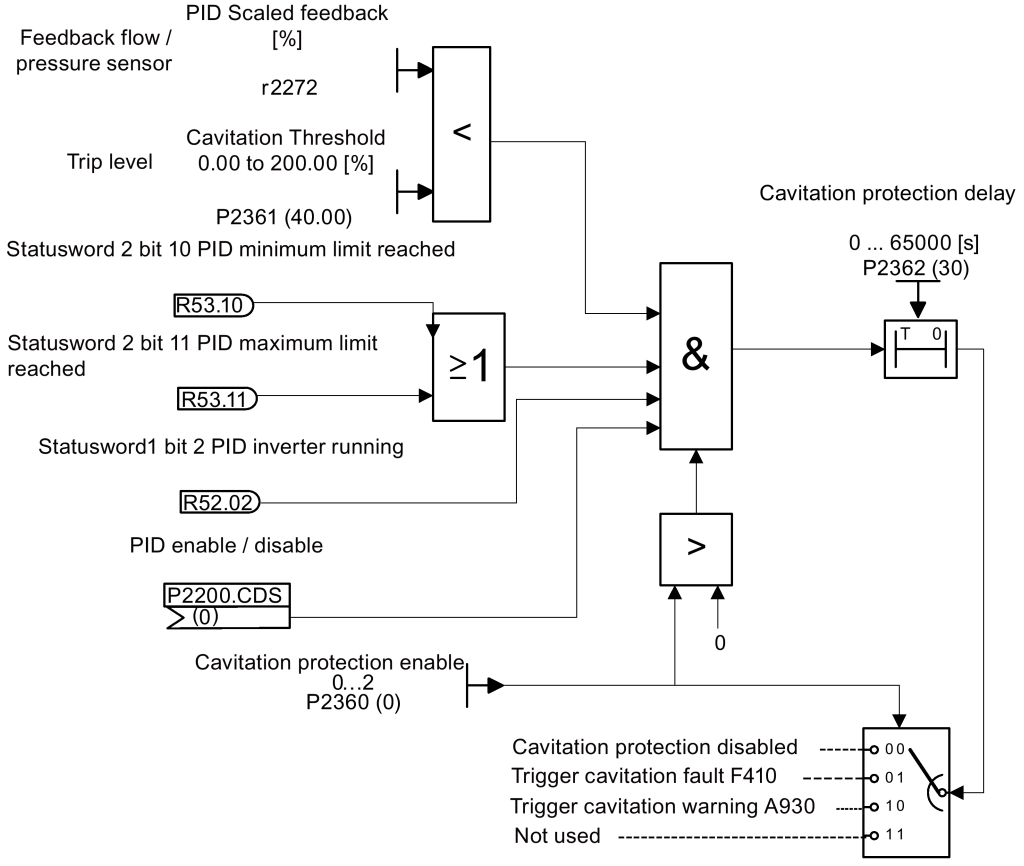 **Cavitation Protection Logic Diagram**							
	0	Disable						
	1	Fault						
	2	Warn						
P2361[0...2]	**Cavitation threshold [%]**	0.00 - 200.00	40.00	U, T	-	DDS	Float	2
	Feedback threshold over which a fault/warning is triggered, as a percentage (%).							
P2362[0...2]	**Cavitation protection time [s]**	0 - 65000	30	U, T	-	DDS	U16	2
	The time for which cavitation conditions have to be present before a fault/warning is triggered.							
P2365[0...2]	**Hibernation enable/disable**	0 - 2	0	U, T	-	DDS	U16	2
	Select or disable the hibernation functionality.							
	0	Disabled						
	1	Frequency hibernation (The inverter uses the frequency setpoint as the wakeup trigger. You can use P2366 and P2367 to configure this function.)						
	2	PID hibernation (The inverter uses the PID error as the wakeup trigger. You can use P2390, P2391, and P2392 to configure this function.)						

Parameter	Function	Range	Factory default	Can be changed	Scaling	Data set	Data type	Acc. Level
P2366[0...2]	**Delay before stopping motor [s]**	0 - 254	5	U, T	-	DDS	U16	3
	With hibernation enabled. If the frequency demand drops below the threshold there is a delay of P2366 seconds before the inverter is stopped.							
P2367[0...2]	**Delay before starting motor [s]**	0 - 254	2	U, T	-	DDS	U16	3
	With hibernation enabled. If pulses have been disabled by the unit going into hibernation, and the frequency demand has increased to above the hibernation threshold, there will be a delay of P2367 seconds before the inverter restarts.							
P2370[0...2]	**Motor staging stop mode**	0 - 1	0	T	-	DDS	U16	3
	Selects stop mode for external motors when motor staging is in use.							
	0	Normal stop						
	1	Sequence stop						
P2371[0...2]	**Motor staging configuration**	0 - 3	0	T	-	DDS	U16	3
	Selects configuration of external motors (M1, M2) used for motor staging feature.							
	0	Motor staging disabled						
	1	M1 = 1 x MV, M2 = Not fitted						
	2	M1 = 1 x MV, M2 = 1 x MV						
	3	M1 = 1 x MV, M2 = 2 x MV						
Caution:	For this kind of motor application it is mandatory to disable negative frequency setpoint!							
Note:	Motor staging allows the control of up to 2 additional staged pumps or fans, based on a PID control system. The complete system consists of one pump controlled by the inverter with up to 2 further pumps/fans controlled from contactors or motor starters. The contactors or motor starter are controlled by outputs from the inverter. The diagram below shows a typical pumping system. A similar system could be set up using fans and air ducts, instead of pumps and pipes. Mains 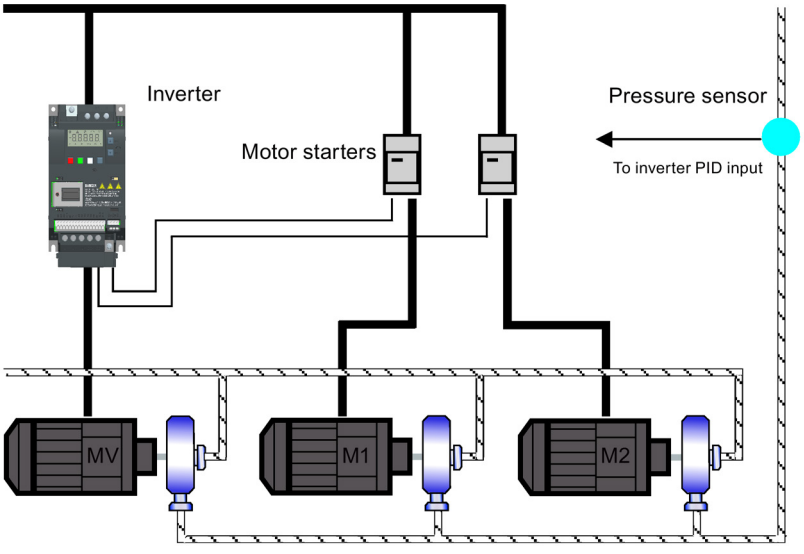 							

Parameter	Function	Range	Factory default	Can be changed	Scaling	Data set	Data type	Acc. Level
	By default the motor states are controlled from digital outputs. In the text below, the following terminology will be used: MV - Variable speed (Inverter controlled motor) M1 - Motor switched with digital output 1 M2 - Motor switched with digital output 2 Staging: The process of starting one of the fixed speed motors. De-staging: The process of stopping one of the fixed speed motors. When the inverter is running at maximum frequency, and the PID feedback indicates that a higher speed is required, the inverter switches on (stages) one of the digital output controlled motors M1 and M2. At the same time, to keep the controlled variable as constant as possible, the inverter must ramp down to minimum frequency. Therefore, during the staging process, PID control must be suspended (see P2378 and diagram below) **Staging of external motors (M1, M2)** Switch-on 1. 2. 3. 4. 5. 6. 7. t P2371 = 0 - - - - - - - - 1 - M1 M1 M1 M1 M1 M1 M1 2 - M1 M1+M2 M1+M2 M1+M2 M1+M2 M1+M2 M1+M2 3 - M1 M2 M1+M2 M1+M2 M1+M2 M1+M2 M1+M2							
	When the inverter is running at minimum frequency, and the PID feedback indicates that a lower speed is required, the inverter switches off (de-stages) one of the digital output controlled motors M1 and M2. In this case, the inverter must ramp from minimum frequency to maximum frequency outside of PID control (see P2378 and diagram below). **Destaging of external motors (M1, M2)** Switch-off 1. 2. 3. 4. 5. 6. 7. t P2371 = 0 - - - - - - - - 1 M1 - - - - - - - 2 M1+M2 M1 - - - - - - 3 M1+M2 M2 M1 - - - - -							
P2372[0...2]	**Motor staging cycling**	0 - 1	0	T	-	DDS	U16	3
	Enables motor cycling for the motor staging feature. When enabled, the motor selected for staging/destaging is based on the hours run counter P2380. When staging, the motor with the least hours is switched on. When destaging, the motor with most hours is switched off. If staged motors are different sizes the choice of motor is first based on required motor size, and then if there is still a choice, on hours run.							
	0	Disabled						
	1	Enabled						
P2373[0...2]	**Motor staging hysteresis [%]**	0.0 - 200.0	20.0	U, T	PERCENT	DDS	Float	3
	P2373 as a percentage of PID setpoint that PID error r2273 must be exceeded before staging delay starts.							
Note:	The value of this parameter must always be smaller than delay override lockout timer P2377.							
P2374[0...2]	**Motor staging delay [s]**	0 - 650	30	U, T	-	DDS	U16	3
	Time that PID error r2273 must exceed motor staging hysteresis P2373 before staging occurs.							

Parameter	Function	Range	Factory default	Can be changed	Scaling	Data set	Data type	Acc. Level
P2375[0...2]	**Motor destaging delay [s]**	0 - 650	30	U, T	-	DDS	U16	3
	Time that PID error r2273 must exceed motor staging hysteresis P2373 before destaging occurs.							
P2376[0...2]	**Motor staging delay override [%]**	0.0 - 200.0	25.0	U, T	PERCENT	DDS	Float	3
	P2376 as a percentage of PID setpoint. When the PID error r2273 exceeds this value, a motor is staged/destaged irrespective of the delay timers.							
Note:	The value of this parameter must always be larger than staging hysteresis P2373.							
P2377[0...2]	**Motor staging lockout timer [s]**	0 - 650	30	U, T	-	DDS	U16	3
	Time for which delay override is prevented after a motor has been staged or destaged. This prevents a second staging event immediately after a first, being caused by the transient conditions after the first staging event.							
P2378[0...2]	**CO: Motor staging frequency f_st [%]**	0.0 - 120.0	50.0	U, T	PERCENT	DDS	Float	3
	The frequency as a percentage of maximum frequency. During a (de) staging event, as the inverter ramps from maximum to minimum frequency (or vice versa) this is the frequency at which the digital output is switched. This is illustrated by the following diagrams. Staging: 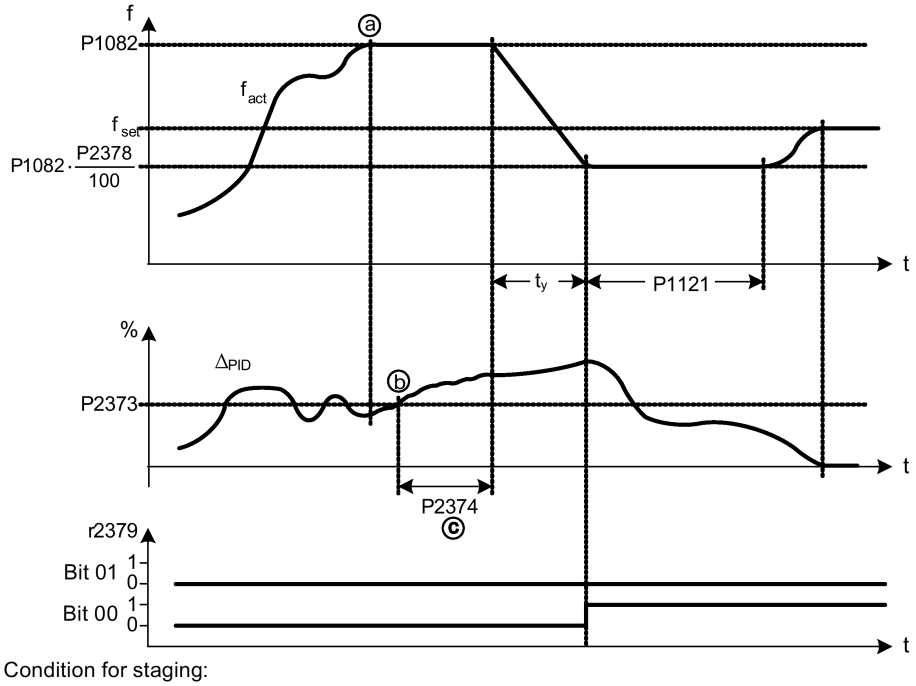 Condition for staging: ⓐ f_{act} ≥ P1082 ⓑ Δ_{PID} ≥ P2373 ⓒ $t_{ⓐⓑ}$ > P2374 $t_y = \left(1 - \frac{P2378}{100}\right) \cdot P1121$							

Parameter	Function	Range	Factory default	Can be changed	Scaling	Data set	Data type	Acc. Level
	Destaging: 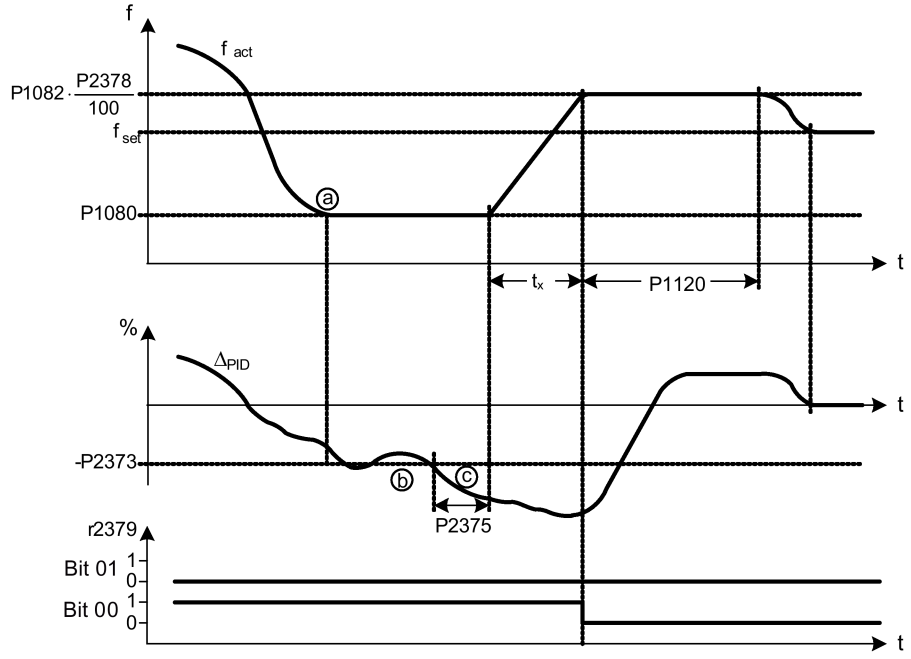 Condition for destaging: ⓐ f_{act} ≤ P1080 ⓑ Δ_{PID} ≤ -P2373 ⓒ $t_{ⓐⓑ}$ > P2375 $tx = \left(\frac{P2378}{100} - \frac{P1080}{P1082}\right) \cdot P1120$							
r2379.0...1	**CO/BO: Motor staging status word**	-	-	-	-	-	U16	3
	Output word from the motor staging feature that allows external connections to be made.							
	Bit	**Signal name**			**1 signal**		**0 signal**	
	00	Start motor 1			Yes		No	
	01	Start motor 2			Yes		No	
P2380[0...2]	**Motor staging hours run [h]**	0.0 - 429496720.0	0.0	U, T	-	-	Float	3
	Displays hours run for external motors. To reset the running hours, set the value to zero, any other value is ignored.							
Example:	P2380 = 0.1 ==> 6 min 60 min = 1 h							
Index:	[0]	Motor 1 hrs run						
	[1]	Motor 2 hrs run						
	[2]	Not used						

Parameter	Function	Range	Factory default	Can be changed	Scaling	Data set	Data type	Acc. Level
P2390	**PID hibernation setpoint [%]**	-200.00 - 200.00	0	U, T	-	-	Float	3
	When the value of P2365 is set to 2 and the inverter under PID control drops below the PID hibernation setpoint, the PID hibernation timer P2391 is started. When the PID hibernation timer has expired, the inverter is ramped down to stop and enters the PID hibernation mode.							
Notice:	PID hibernation is an added feature to enhance PID functionality, and switches off the motor when the inverter is running at low setpoint. Note that this is an independent function from staging, although it can be used together with staging.							
Note:	If PID hibernation setpoint is 0, the PID hibernation function is disabled. The PID hibernation setpoint should be greater than the minimum frequency (P1080). Reverse operation is not allowed with the PID hibernation mode.							
P2391	**PID hibernation timer [s]**	0 - 254	0	T	-	-	U16	3
	When the PID hibernation timer P2391 has expired, the inverter is ramped down to stop and enters the PID hibernation mode.							
P2392	**PID hibernation restart setpoint [%]**	-200.00 - 200.00	0	T	-	-	Float	3
	While in PID hibernation mode, the PID controller continues to generate the error r2273. Once this reaches the restart point P2392, the inverter immediately ramps to the setpoint calculated by the PID controller.							
r2399	**CO/BO: PID hibernation status word**	-	0	-	-	-	U16	3
	Displays PID hibernation status word.							

	Bit	Signal name	1 signal	0 signal
	Bit 00	Not used	Yes	No
	Bit 01	PID hibernation enabled (PID hibernation is enabled and the inverter is not in PID hibernation.)	Yes	No
	Bit 02	Hibernation active (PID hibernation is enabled and the inverter is in PID hibernation.)	Yes	No

P2800	**Enable FFBs**	0 - 1	0	U, T	-	-	U16	3
	Free function blocks (FFB) are enabled in two steps: 1. P2800 enables all free function blocks (P2800 = 1). 2. P2801 and P2802 respectively, enable each free function block individually. Additionally fast free function blocks can be enabled via P2803 = 1.							
	0	Disable						
	1	Enable						
Dependency:	All active function blocks will be calculated in every 128 ms, fast free function blocks in every 8 ms.							

Parameter	Function	Range	Factory default	Can be changed	Scaling	Data set	Data type	Acc. Level
P2801[0...16]	**Activate FFBs**	0 - 6	0	U, T	-	-	U16	3
	P2801 and P2802 respectively, enable each free function block individually (P2801[x] > 0 or P2802[x] > 0). In addition, P2801 and P2802 determine the chronological order of each function block by setting the level in which the free function block will work. The following table shows that the priority decreases from right to left and from top to bottom. 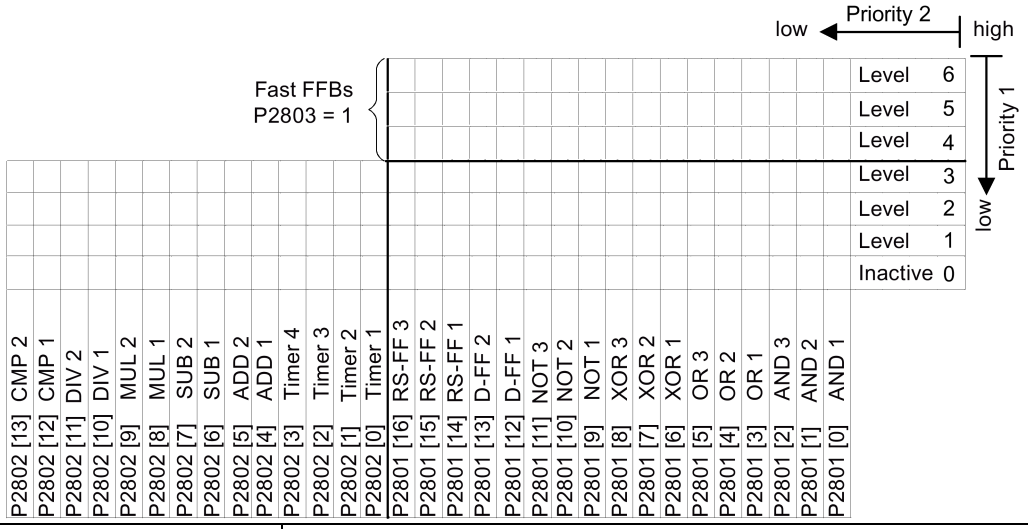							
	0	Not Active						
	1	Level 1						
	2	Level 2						
	...	...						
	6	Level 6						
Example:	P2801[3] = 2, P2801[4] = 2, P2802[3] = 3, P2802[4] = 2 FFBs will be calculated in following order: P2802[3], P2801[3] , P2801[4], P2802[4]							
Index:	[0]	Enable AND 1						
	[1]	Enable AND 2						
	[2]	Enable AND 3						
	[3]	Enable OR 1						
	[4]	Enable OR 2						
	[5]	Enable OR 3						
	[6]	Enable XOR 1						
	[7]	Enable XOR 2						
	[8]	Enable XOR 3						
	[9]	Enable NOT 1						
	[10]	Enable NOT 2						
	[11]	Enable NOT 3						
	[12]	Enable D-FF 1						
	[13]	Enable D-FF 2						
	[14]	Enable RS-FF 1						
	[15]	Enable RS-FF 2						
	[16]	Enable RS-FF 3						

Parameter	Function	Range	Factory default	Can be changed	Scaling	Data set	Data type	Acc. Level
Dependency:	Set P2800 to 1 to enable function blocks. All active function blocks will be calculated in every 128 ms, if set to level 1 to 3. Fast free function blocks (level 4 to 6) will be calculated in every 8 ms.							
P2802[0...13]	**Activate FFBs**	0 - 3	0	U, T	-	-	U16	3
	Enables free function blocks (FFB) and determines the chronological order of each function block. See P2801.							
	0	Not Active						
	1	Level 1						
	2	Level 2						
	3	Level 3						
Index:	[0]	Enable timer 1						
	[1]	Enable timer 2						
	[2]	Enable timer 3						
	[3]	Enable timer 4						
	[4]	Enable ADD 1						
	[5]	Enable ADD 2						
	[6]	Enable SUB 1						
	[7]	Enable SUB 2						
	[8]	Enable MUL 1						
	[9]	Enable MUL 2						
	[10]	Enable DIV 1						
	[11]	Enable DIV 2						
	[12]	Enable CMP 1						
	[13]	Enable CMP 2						
Dependency:	Set P2800 to 1 to enable function blocks. All active function blocks, enabled with P2802, will be calculated in every 128 ms.							
P2803[0...2]	**Enable Fast FFBs**	0 - 1	0	U, T	-	CDS	U16	3
	Fast free function blocks (FFB) are enabled in two steps: 1. P2803 enables the use of fast free function blocks (P2803 = 1). 2. P2801 enables each fast free function block individually and determines the chronological order (P2801[x] = 4 to 6).							
	0	Disable						
	1	Enable						
Dependency:	All active fast function blocks will be calculated in every 8 ms.							
Note:	Attention: P2200 and P2803 are locked parameter against each other. PID and FFB of the same data set cannot be active at same time.							
P2810[0...1]	**BI: AND 1**	0 - 4294967295	0	U, T	-	-	U32	3
	P2810[0], P2810[1] define inputs of AND 1 element, output is r2811. 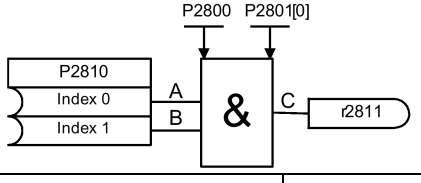 A B C 0 0 0 0 1 0 1 0 0 1 1 1							
Index:	[0]	Binector input 0 (BI 0)						
	[1]	Binector input 1 (BI 1)						
Dependency:	P2801[0] assigns the AND element to the processing sequence.							

Parameter	Function	Range	Factory default	Can be changed	Scaling	Data set	Data type	Acc. Level
r2811.0	**BO: AND 1**	-	-	-	-	-	U16	3
	Output of AND 1 element. Displays and logic of bits defined in P2810[0], P2810[1].							
	Bit	**Signal name**			**1 signal**		**0 signal**	
	00	Output of BO			Yes		No	
Dependency:	See P2810							
P2812[0...1]	**BI: AND 2**	0 - 4294967295	0	U, T	-	-	U32	3
	P2812[0], 2812[1] define inputs of AND 2 element, output is r2813.							
Index:	See P2810							
Dependency:	P2801[1] assigns the AND element to the processing sequence.							
r2813.0	**BO: AND 2**	-	-	-	-	-	U16	3
	Output of AND 2 element. Displays and logic of bits defined in P2812[0], P2812[1]. See r2811 for the bit field description.							
Dependency:	See P2812							
P2814[0...1]	**BI: AND 3**	0 - 4294967295	0	U, T	-	-	U32	3
	P2814[0], P2814[1] define inputs of AND 3 element, output is r2815.							
Index:	See P2810							
Dependency:	P2801[2] assigns the AND element to the processing sequence.							
r2815.0	**BO: AND 3**	-	-	-	-	-	U16	3
	Output of AND 3 element. Displays and logic of bits defined in P2814[0], P2814[1]. See r2811 for the bit field description.							
Dependency:	See P2814							
P2816[0...1]	**BI: OR 1**	0 - 4294967295	0	U, T	-	-	U32	3
	P2816[0], P2816[1] define inputs of OR 1 element, output is r2817. 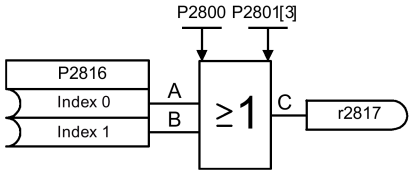 A B C 0 0 0 0 1 1 1 0 1 1 1 1							
Index:	See P2810							
Dependency:	P2801[3] assigns the OR element to the processing sequence.							
r2817.0	**BO: OR 1**	-	-	-	-	-	U16	3
	Output of OR 1 element. Displays or logic of bits defined in P2816[0], P2816[1]. See r2811 for the bit field description.							
Dependency:	See P2816							
P2818[0...1]	**BI: OR 2**	0 - 4294967295	0	U, T	-	-	U32	3
	P2818[0], P2818[1] define inputs of OR 2 element, output is r2819.							
Index:	See P2810							
Dependency:	P2801[4] assigns the OR element to the processing sequence.							

Parameter	Function	Range	Factory default	Can be changed	Scaling	Data set	Data type	Acc. Level
r2819.0	**BO: OR 2**	-	-	-	-	-	U16	3
	Output of OR 2 element. Displays or logic of bits defined in P2818[0], P2818[1]. See r2811 for the bit field description.							
Dependency:	See P2818							
P2820[0...1]	**BI: OR 3**	0 - 4294967295	0	U, T	-	-	U32	3
	P2820[0], P2820[1] define inputs of OR 3 element, output is r2821.							
Index:	See P2810							
Dependency:	P2801[5] assigns the OR element to the processing sequence.							
r2821.0	**BO: OR 3**	-	-	-	-	-	U16	3
	Output of OR 3 element. Displays or logic of bits defined in P2820[0], P2820[1]. See r2811 for the bit field description.							
Dependency:	See P2820							
P2822[0...1]	**BI: XOR 1**	0 - 4294967295	0	U, T	-	-	U32	3
	P2822[0], P2822[1] define inputs of XOR 1 element, output is r2823. 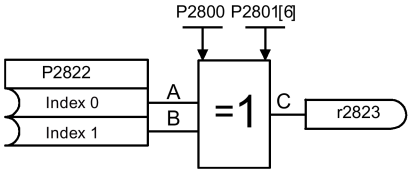 A B C 0 0 0 0 1 1 1 0 1 1 1 0							
Index:	See P2810							
Dependency:	P2801[6] assigns the XOR element to the processing sequence.							
r2823.0	**BO: XOR 1**	-	-	-	-	-	U16	3
	Output of XOR 1 element. Displays exclusive-or logic of bits defined in P2822[0], P2822[1]. See r2811 for the bit field description.							
Dependency:	See P2822							
P2824[0...1]	**BI: XOR 2**	0 - 4294967295	0	U, T	-	-	U32	3
	P2824[0], P2824[1] define inputs of XOR 2 element, output is r2825.							
Index:	See P2810							
Dependency:	P2801[7] assigns the XOR element to the processing sequence.							
r2825.0	**BO: XOR 2**	-	-	-	-	-	U16	3
	Output of XOR 2 element. Displays exclusive-or logic of bits defined in P2824[0], P2824[1]. See r2811 for the bit field description.							
Dependency:	See P2824							
P2826[0...1]	**BI: XOR 3**	0 - 4294967295	0	U, T	-	-	U32	3
	P2826[0], P2826[1] define inputs of XOR 3 element, output is r2827.							
Index:	See P2810							
Dependency:	P2801[8] assigns the XOR element to the processing sequence.							

Parameter	Function	Range	Factory default	Can be changed	Scaling	Data set	Data type	Acc. Level
r2827.0	**BO: XOR 3**	-	-	-	-	-	U16	3
	Output of XOR 3 element. Displays exclusive-or logic of bits defined in P2826[0], P2826[1]. See r2811 for the bit field description.							
Dependency:	See P2826							
P2828	**BI: NOT 1**	0 - 4294967295	0	U, T	-	-	U32	3
	P2828 defines input of NOT 1 element, output is r2829. 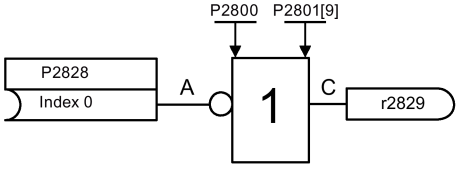 A C: 0 1; 1 0							
Dependency:	P2801[9] assigns the NOT element to the processing sequence.							
r2829.0	**BO: NOT 1**	-	-	-	-	-	U16	3
	Output of NOT 1 element. Displays not logic of bit defined in P2828. See r2811 for the bit field description.							
Dependency:	See P2828							
P2830	**BI: NOT 2**	0 - 4294967295	0	U, T	-	-	U32	3
	P2830 defines input of NOT 2 element, output is r2831.							
Dependency:	P2801[10] assigns the NOT element to the processing sequence.							
r2831.0	**BO: NOT 2**	-	-	-	-	-	U16	3
	Output of NOT 2 element. Displays not logic of bit defined in P2830. See r2811 for the bit field description.							
Dependency:	See P2830							
P2832	**BI: NOT 3**	0 - 4294967295	0	U, T	-	-	U32	3
	P2832 defines input of NOT 3 element, output is r2833.							
Dependency:	P2801[11] assigns the NOT element to the processing sequence.							
r2833.0	**BO: NOT 3**	-	-	-	-	-	U16	3
	Output of NOT 3 element. Displays not logic of bit defined in P2832. See r2811 for the bit field description.							
Dependency:	See P2832							

Parameter	Function	Range	Factory default	Can be changed	Scaling	Data set	Data type	Acc. Level
P2834[0...3]	**BI: D-FF 1**	0 - 4294967295	0	U, T	-	-	U32	3
	P2834[0], P2834[1], P2834[2], P2834[3] define inputs of D-FlipFlop 1, outputs are r2835, r2836. 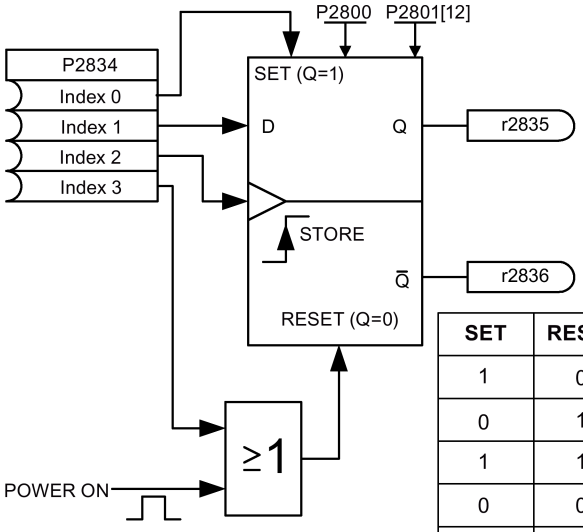 <table><tr><th>SET</th><th>RESET</th><th>D</th><th>STORE</th><th>Q</th><th>$\overline{Q}$</th></tr><tr><td>1</td><td>0</td><td>x</td><td>x</td><td>1</td><td>0</td></tr><tr><td>0</td><td>1</td><td>x</td><td>x</td><td>0</td><td>1</td></tr><tr><td>1</td><td>1</td><td>x</td><td>x</td><td>Q_{n-1}</td><td>$\overline{Q}_{n-1}$</td></tr><tr><td>0</td><td>0</td><td>1</td><td>↑</td><td>1</td><td>0</td></tr><tr><td>0</td><td>0</td><td>0</td><td>↑</td><td>0</td><td>1</td></tr><tr><td colspan="4">POWER-ON</td><td>0</td><td>1</td></tr></table>							
Index:	[0]	Binector input: Set						
	[1]	Binector input: D input						
	[2]	Binector input: Store pulse						
	[3]	Binector input: Reset						
Dependency:	P2801[12] assigns the D-FlipFlop to the processing sequence.							
r2835.0	**BO: Q D-FF 1**	-	-	-	-	-	U16	3
	Displays output of D-FlipFlop 1, inputs are defined in P2834[0], P2834[1], P2834[2], P2834[3]. See r2811 for the bit field description.							
Dependency:	See P2834							
r2836.0	**BO: NOT-Q D-FF 1**	-	-	-	-	-	U16	3
	Displays Not-output of D-FlipFlop 1, inputs are defined in P2834[0], P2834[1], P2834[2], P2834[3]. See r2811 for the bit field description.							
Dependency:	See P2834							
P2837[0...3]	**BI: D-FF 2**	0 - 4294967295	0	U, T	-	-	U32	3
	P2837[0], P2837[1], P2837[2], P2837[3] define inputs of D-FlipFlop 2, outputs are r2838, r2839.							
Index:	See P2834							
Dependency:	P2801[13] assigns the D-FlipFlop to the processing sequence.							
r2838.0	**BO: Q D-FF 2**	-	-	-	-	-	U16	3
	Displays output of D-FlipFlop 2, inputs are defined in P2837[0], P2837[1], P2837[2], P2837[3]. See r2811 for the bit field description.							
Dependency:	See P2837							
r2839.0	**BO: NOT-Q D-FF 2**	-	-	-	-	-	U16	3
	Displays Not-output of D-FlipFlop 2, inputs are defined in P2837[0], P2837[1], P2837[2], P2837[3]. See r2811 for the bit field description.							
Dependency:	See P2837							

Parameter	Function	Range	Factory default	Can be changed	Scaling	Data set	Data type	Acc. Level
P2840[0...1]	**BI: RS-FF 1**	0 - 4294967295	0	U, T	-	-	U32	3
	P2840[0], P2840[1] define inputs of RS-FlipFlop 1, outputs are r2841, r2842. 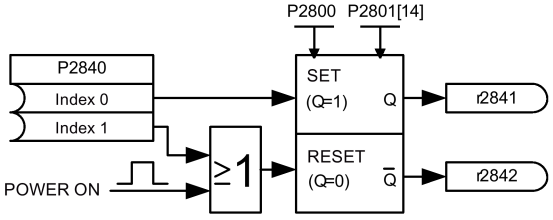							
Index:	[0]	Binector input: Set						
	[1]	Binector input: Reset						
Dependency:	P2801[14] assigns the RS-FlipFlop to the processing sequence.							
r2841.0	**BO: Q RS-FF 1**	-	-	-	-	-	U16	3
	Displays output of RS-FlipFlop 1, inputs are defined in P2840[0], P2840[1]. See r2811 for the bit field description.							
Dependency:	See P2840							
r2842.0	**BO: NOT-Q RS-FF 1**	-	-	-	-	-	U16	3
	Displays Not-output of RS-FlipFlop 1, inputs are defined in P2840[0], P2840[1]. See r2811 for the bit field description.							
Dependency:	See P2840							
P2843[0...1]	**BI: RS-FF 2**	0 - 4294967295	0	U, T	-	-	U32	3
	P2843[0], P2843[1] define inputs of RS-FlipFlop 2, outputs are r2844, r2845.							
Index:	See P2840							
Dependency:	P2801[15] assigns the RS-FlipFlop to the processing sequence.							
r2844.0	**BO: Q RS-FF 2**	-	-	-	-	-	U16	3
	Displays output of RS-FlipFlop 2, inputs are defined in P2843[0], P2843[1]. See r2811 for the bit field description.							
Dependency:	See P2843							
r2845.0	**BO: NOT-Q RS-FF 2**	-	-	-	-	-	U16	3
	Displays Not-output of RS-FlipFlop 2, inputs are defined in P2843[0], P2843[1]. See r2811 for the bit field description.							
Dependency:	See P2843							
P2846[0...1]	**BI: RS-FF 3**	0 - 4294967295	0	U, T	-	-	U32	3
	P2846[0], P2846[1] define inputs of RS-FlipFlop 3, outputs are r2847, r2848.							
Index:	See P2840							
Dependency:	P2801[16] assigns the RS-FlipFlop to the processing sequence.							
r2847.0	**BO: Q RS-FF 3**	-	-	-	-	-	U16	3
	Displays output of RS-FlipFlop 3, inputs are defined in P2846[0], P2846[1]. See r2811 for the bit field description.							
Dependency:	See P2846							
r2848.0	**BO: NOT-Q RS-FF 3**	-	-	-	-	-	U16	3
	Displays Not-output of RS-FlipFlop 3, inputs are defined in P2846[0], P2846[1]. See r2811 for the bit field description.							
Dependency:	See P2846							

SET	RESET	Q	$\overline{Q}$
0	0	Q_{n-1}	$\overline{Q}_{n-1}$
0	1	0	1
1	0	1	0
1	1	Q_{n-1}	$\overline{Q}_{n-1}$
POWER-ON		0	1

Parameter	Function	Range	Factory default	Can be changed	Scaling	Data set	Data type	Acc. Level
P2849	**BI: Timer 1**	0 - 4294967295	0	U, T	-	-	U32	3
	Define input signal of timer 1. P2849, P2850, P2851 are the inputs of the timer, outputs are r2852, r2853. 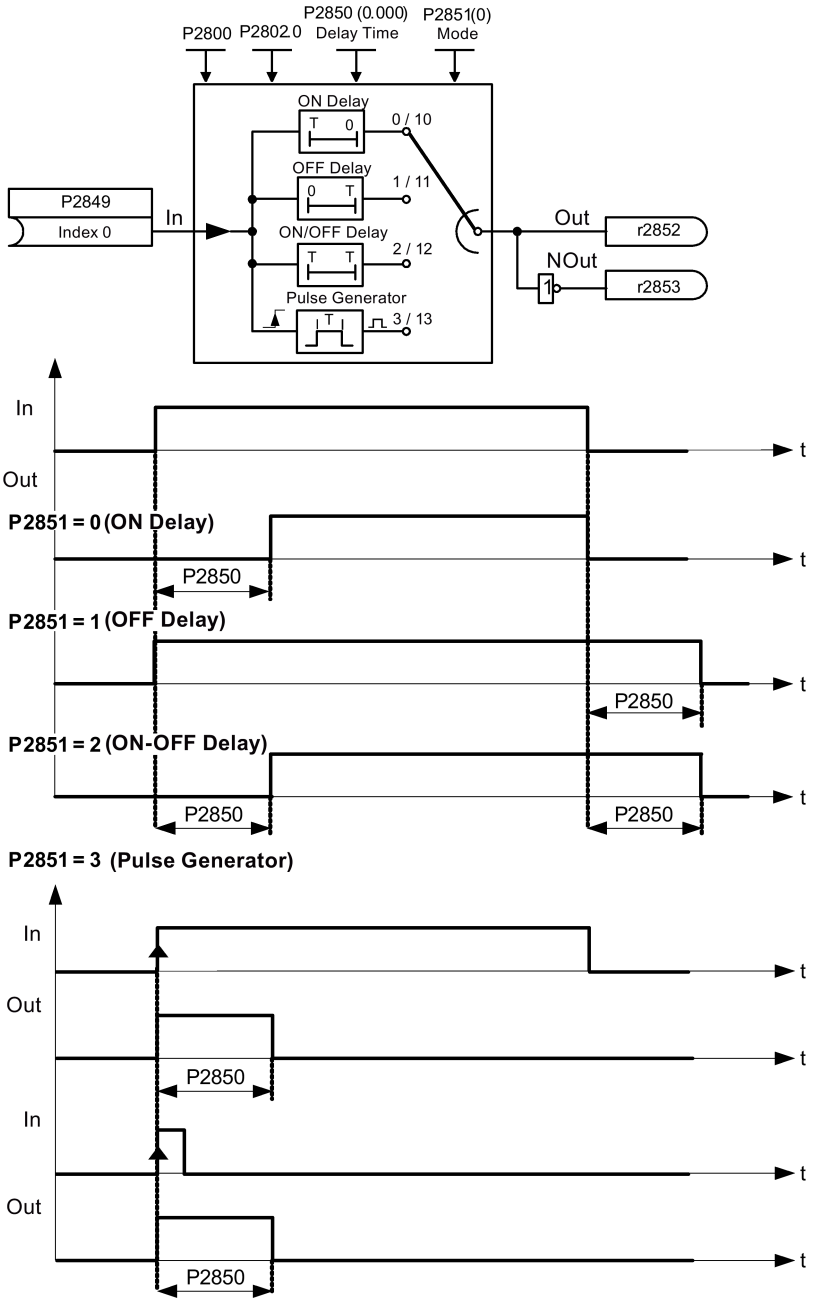 							
Dependency:	P2802[0] assigns the timer to the processing sequence.							
P2850	**Delay time of timer 1 [s]**	0.0 - 9999.9	0.0	U, T	-	-	Float	3
	Defines delay time of timer 1. P2849, P2850, P2851 are the inputs of the timer, outputs are r2852, r2853.							
Dependency:	See P2849							

Parameter	Function	Range	Factory default	Can be changed	Scaling	Data set	Data type	Acc. Level
P2851	**Mode timer 1**	0 - 13	0	U, T	-	-	U16	3
	Selects mode of timer 1. P2849, P2850, P2851 are the inputs of the timer, outputs are r2852, r2853.							
	0	ON delay (seconds)						
	1	OFF delay (seconds)						
	2	ON/OFF delay (seconds)						
	3	Pulse generator (seconds)						
	10	ON delay (minutes)						
	11	OFF delay (minutes)						
	12	ON/OFF delay (minutes)						
	13	Pulse generator (minutes)						
Dependency:	See P2849							
r2852.0	**BO: Timer 1**	-	-	-	-	-	U16	3
	Displays output of timer 1. P2849, P2850, P2851 are the inputs of the timer, outputs are r2852, r2853. See r2811 for the bit field description.							
Dependency:	See P2849							
r2853.0	**BO: Nout timer 1**	-	-	-	-	-	U16	3
	Displays Not-output of timer 1. P2849, P2850, P2851 are the inputs of the timer, outputs are r2852, r2853. See r2811 for the bit field description.							
Dependency:	See P2849							
P2854	**BI: Timer 2**	0 - 4294967295	0	U, T	-	-	U32	3
	Define input signal of timer 2. P2854, P2855, P2856 are the inputs of the timer, outputs are r2857, r2858.							
Dependency:	P2802[1] assigns the timer to the processing sequence.							
P2855	**Delay time of timer 2 [s]**	0.0 - 9999.9	0.0	U, T	-	-	Float	3
	Defines delay time of timer 2. P2854, P2855, P2856 are the inputs of the timer, outputs are r2857, r2858.							
Dependency:	See P2854							
P2856	**Mode timer 2**	0 - 13	0	U, T	-	-	U16	3
	Selects mode of timer 2. P2854, P2855, P2856 are the inputs of the timer, outputs are r2857, r2858. See P2851 for value description.							
Dependency:	See P2854							
r2857.0	**BO: Timer 2**	-	-	-	-	-	U16	3
	Displays output of timer 2. P2854, P2855, P2856 are the inputs of the timer, outputs are r2857, r2858. See r2811 for the bit field description.							
Dependency:	See P2854							
r2858.0	**BO: Nout timer 2**	-	-	-	-	-	U16	3
	Displays Not-output of timer 2 P2854, P2855, P2856 are the inputs of the timer, outputs are r2857, r2858. See r2811 for the bit field description.							
Dependency:	See P2854							
P2859	**BI: Timer 3**	0 - 4294967295	0	U, T	-	-	U32	3
	Define input signal of timer 3. P2859, P2860, P2861 are the inputs of the timer, outputs are r2862, r2863.							
Dependency:	P2802[2] assigns the timer to the processing sequence.							
P2860	**Delay time of timer 3 [s]**	0.0 - 9999.9	0.0	U, T	-	-	Float	3
	Defines delay time of timer 3. P2859, P2860, P2861 are the inputs of the timer, outputs are r2862, r2863.							
Dependency:	See P2859							

Parameter	Function	Range	Factory default	Can be changed	Scaling	Data set	Data type	Acc. Level
P2861	**Mode timer 3**	0 - 13	0	U, T	-	-	U16	3
	Selects mode of timer 3. P2859, P2860, P2861 are the inputs of the timer, outputs are r2862, r2863. See P2851 for value description.							
Dependency:	See P2859							
r2862.0	**BO: Timer 3**	-	-	-	-	-	U16	3
	Displays output of timer 3. P2859, P2860, P2861 are the inputs of the timer, outputs are r2862, r2863. See r2811 for the bit field description.							
Dependency:	See P2859							
r2863.0	**BO: Nout timer 3**	-	-	-	-	-	U16	3
	Displays Not-output of timer 3. P2859, P2860, P2861 are the inputs of the timer, outputs are r2862, r2863. See r2811 for the bit field description.							
Dependency:	See P2859							
P2864	**BI: Timer 4**	0 - 4294967295	0	U, T	-	-	U32	3
	Define input signal of timer 4. P2864, P2865, P2866 are the inputs of the timer, outputs are P2867, P2868.							
Dependency:	P2802[3] assigns the timer to the processing sequence.							
P2865	**Delay time of timer 4 [s]**	0.0 - 9999.9	0.0	U, T	-	-	Float	3
	Defines delay time of timer 4. P2864, P2865, P2866 are the inputs of the timer, outputs are r2867, r2868.							
Dependency:	See P2864							
P2866	**Mode timer 4**	0 - 13	0	U, T	-	-	U16	3
	Selects mode of timer 4. P2864, P2865, P2866 are the inputs of the timer, outputs are r2867, r2868. See P2851 for value description.							
Dependency:	See P2864							
r2867.0	**BO: Timer 4**	-	-	-	-	-	U16	3
	Displays output of timer 4. P2864, P2865, P2866 are the inputs of the timer, outputs are r2867, r2868. See r2811 for the bit field description.							
Dependency:	See P2864							
r2868.0	**BO: Nout timer 4**	-	-	-	-	-	U16	3
	Displays Not-output of timer 4. P2864, P2865, P2866 are the inputs of the timer, outputs are r2867, r2868. See r2811 for the bit field description.							
Dependency:	See P2864							
P2869[0...1]	**CI: ADD 1**	0 - 4294967295	0	U, T	4000H	-	U32	3
	Define inputs of Adder 1, result is in r2870. 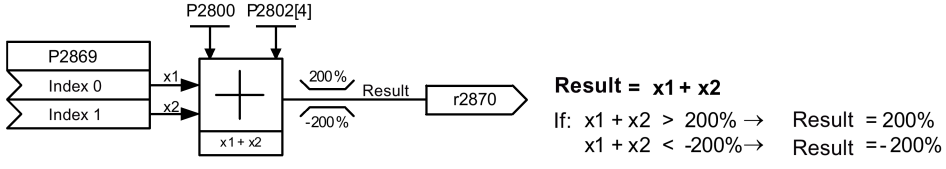 							
Index:	[0]	Connector input 0 (CI 0)						
	[1]	Connector input 1 (CI 1)						
Dependency:	P2802[4] assigns the Adder to the processing sequence.							
r2870	**CO: ADD 1**	-	-	-	-	-	Float	3
	Result of Adder 1.							
Dependency:	See P2869							

Parameter	Function	Range	Factory default	Can be changed	Scaling	Data set	Data type	Acc. Level
P2871[0...1]	**CI: ADD 2**	0 - 4294967295	0	U, T	4000H	-	U32	3
	Define inputs of Adder 2, result is in r2872.							
Index:	See P2869							
Dependency:	P2802[5] assigns the Adder to the processing sequence.							
r2872	**CO: ADD 2**	-	-	-	-	-	Float	3
	Result of Adder 2.							
Dependency:	See P2871							
P2873[0...1]	**CI: SUB 1**	0 - 4294967295	0	U, T	4000H	-	U32	3
	Define inputs of Subtractor 1, result is in r2874. 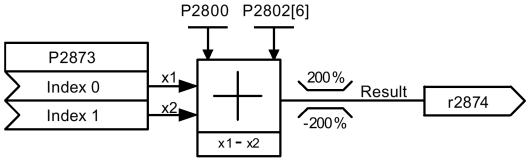 **Result = x1 - x2** If: x1 - x2 > 200% → Result = 200% x1 - x2 < -200% → Result = -200%							
Index:	See P2869							
Dependency:	P2802[6] assigns the Subtractor to the processing sequence.							
r2874	**CO: SUB 1**	-	-	-	-	-	Float	3
	Result of Subtractor 1.							
Dependency:	See P2873							
P2875[0...1]	**CI: SUB 2**	0 - 4294967295	0	U, T	4000H	-	U32	3
	Define inputs of Subtractor 2, result is in r2876.							
Index:	See P2869							
Dependency:	P2802[7] assigns the Subtractor to the processing sequence.							
r2876	**CO: SUB 2**	-	-	-	-	-	Float	3
	Result of Subtractor 2.							
Dependency:	See P2875							
P2877[0...1]	**CI: MUL 1**	0 - 4294967295	0	U, T	4000H	-	U32	3
	Define inputs of Multiplier 1, result is in r2878. 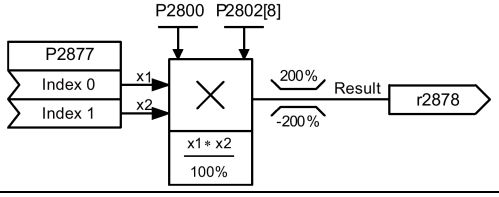 **Result =** $\frac{x1 * x2}{100\%}$ If: $\frac{x1 * x2}{100\%}$ > 200% → Result = 200% $\frac{x1 * x2}{100\%}$ < -200% → Result = -200%							
Index:	See P2869							
Dependency:	P2802[8] assigns the Multiplier to the processing sequence.							
r2878	**CO: MUL 1**	-	-	-	-	-	Float	3
	Result of Multiplier 1.							
Dependency:	See P2877							
P2879[0...1]	**CI: MUL 2**	0 - 4294967295	0	U, T	4000H	-	U32	3
	Define inputs of Multiplier 2, result is in r2880.							
Index:	See P2869							
Dependency:	P2802[9] assigns the Multiplier to the processing sequence.							

Parameter	Function	Range	Factory default	Can be changed	Scaling	Data set	Data type	Acc. Level
r2880	**CO: MUL 2**	-	-	-	-	-	Float	3
	Result of Multiplier 2.							
Dependency:	See P2879							
P2881[0...1]	**CI: DIV 1**	0 - 4294967295	0	U, T	4000H	-	U32	3
	Define inputs of Divider 1, result is in r2882. 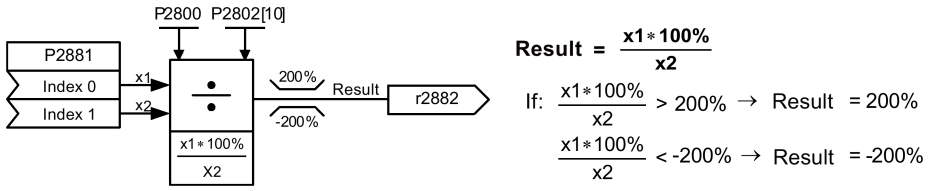 $\text{Result} = \frac{x1 * 100\%}{x2}$ If: $\frac{x1 * 100\%}{x2} > 200\% \rightarrow \text{Result} = 200\%$ $\frac{x1 * 100\%}{x2} < -200\% \rightarrow \text{Result} = -200\%$							
Index:	See P2869							
Dependency:	P2802[10] assigns the Divider to the processing sequence.							
r2882	**CO: DIV 1**	-	-	-	-	-	Float	3
	Result of Divider 1.							
Dependency:	See P2881							
P2883[0...1]	**CI: DIV 2**	0 - 4294967295	0	U, T	4000H	-	U32	3
	Define inputs of Divider 2, result is in r2884.							
Index:	See P2869							
Dependency:	P2802[11] assigns the Divider to the processing sequence.							
r2884	**CO: DIV 2**	-	-	-	-	-	Float	3
	Result of Divider 2.							
Dependency:	See P2883							
P2885[0...1]	**CI: CMP 1**	0 - 4294967295	0	U, T	4000H	-	U32	3
	Defines inputs of Comparator 1, output is r2886. 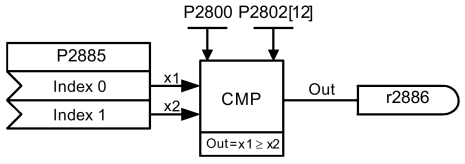 $x1 \geq x2 \rightarrow \text{Out} = 1$ $x1 < x2 \rightarrow \text{Out} = 0$							
Index:	See P2869							
Dependency:	P2802[12] assigns the Comparator to the processing sequence.							

Parameter	Function	Range	Factory default	Can be changed	Scaling	Data set	Data type	Acc. Level
r2886.0	**BO: CMP 1**	-	-	-	-	-	Float	3
	Displays result bit of Comparator 1. See r2811 for the bit field description.							
Dependency:	See P2885							
P2887[0...1]	**CI: CMP 2**	0 - 4294967295	0	U, T	4000H	-	U32	3
	Defines inputs of Comparator 2, output is r2888.							
Index:	See P2869							
Dependency:	P2802[13] assigns the Comparator to the processing sequence.							
r2888.0	**BO: CMP 2**	-	-	-	-	-	U16	3
	Displays result bit of Comparator 2. See r2811 for the bit field description.							
Dependency:	See P2887							
P2889	**CO: Fixed setpoint 1 in [%]**	-200.00 - 200.00	0.00	U, T	-	-	Float	3
	Fixed percent setting 1. Connector Setting in % P2889 P2890 Range: -200% to 200%							
P2890	**CO: Fixed setpoint 2 in [%]**	-200.00 - 200.00	0.00	U, T	-	-	Float	3
	Fixed percent setting 2.							
P2940	**BI: Release wobble function**	0 - 4294967295	0.0	T	-	-	U32	2
	Defines the source to release the wobble function.							
P2945	**Wobble signal frequency [Hz]**	0.001 - 10.000	1.000	T	-	-	Float	2
	Sets the frequency of the wobble signal.							

Parameter	Function	Range	Factory default	Can be changed	Scaling	Data set	Data type	Acc. Level
P2946	**Wobble signal amplitude [%]**	0.000 - 0.200	0.000	T	-	-	Float	2
	Sets the value for the amplitude of the wobble-signal as a proportion of the present ramp function generator (RFG) output. The value of P2946 is multiplied by the output value of the RFG then added to RFG output. For example, if the RFG output is 10 Hz, and P2946 has a value of 0.100, the wobble signal amplitude will be 0.100 * 10 = 1 Hz. This means that the RFG output will therefore wobble between 9 Hz and 11 Hz.							
P2947	**Wobble signal decrement step**	0.000 - 1.000	0.000	T	-	-	Float	2
	Sets the value for decrement step at the end of the positive signal period. The amplitude of the step is dependant upon the signal amplitude as follows: Amplitude of signal decrement step = P2947 * P2946							
P2948	**Wobble signal increment step**	0.000 - 1.000	0.000	T	-	-	Float	2
	Sets the value for the increment step at the end of the negative signal period. The amplitude of the increment step is dependant upon the signal amplitude as follows: Amplitude of signal increment step = P2948 * P2946							
P2949	**Wobble signal pulse width [%]**	0 - 100	50	T	-	-	U16	2
	Sets the relative widths of the rising and falling pulses. The value in P2949 sets the proportion of the wobble period (determined by P2945) allocated to the rising pulse, the remainder of the time is allocation to the falling pulse. A value of 60% in P2949 means that 60% of the wobble period the wobble output will be rising. For the remaining 40% of the wobble period the wobble output will be falling.							
r2955	**CO: Wobble signal output [%]**	-	-	-	-	-	Float	2
	Displays the output of the wobble function.							
r3113.0...15	**CO/BO: Fault bit array**	-	-	-	-	-	U16	1
	Gives information about actual fault.							

Bit	Signal name	1 signal	0 signal
00	Inverter error	Yes	No
01	Power line failure	Yes	No
02	Intermediate circuit power voltage	Yes	No
03	Error power electronics	Yes	No
04	Inverter overtemperature	Yes	No
05	Earth leakage	Yes	No
06	Motor overload	Yes	No
07	Bus fault	Yes	No
09	Reserved	Yes	No
10	Fault internal communication	Yes	No
11	Motor current limit	Yes	No
12	Supply failure	Yes	No
13	Reserved	Yes	No
14	Reserved	Yes	No
15	Other error	Yes	No

Parameter	Function	Range	Factory default	Can be changed	Scaling	Data set	Data type	Acc. Level
r3237[0...1]	**CO: Calculated rms DC ripple voltage [V]**	-	0	-	-	-	Float	4
	Displays calculated rms dc-link ripple voltage.							
Index:	[0]	Ripple Volts						
	[1]	Unfiltered Volts						
P3350[0...2]	**Super torque modes**	0 - 3	0	T	-	-	U16	2
	Selects the super torque function. Three different super torque modes are available: • Super Torque - applies a pulse of torque for a given time to help start the motor • Hammer Start - applies a sequence of torque pulses to help start the motor • Blockage Clearing - performs a reverse-forward operation to clear a pump blockage **Super Torque Operation:** 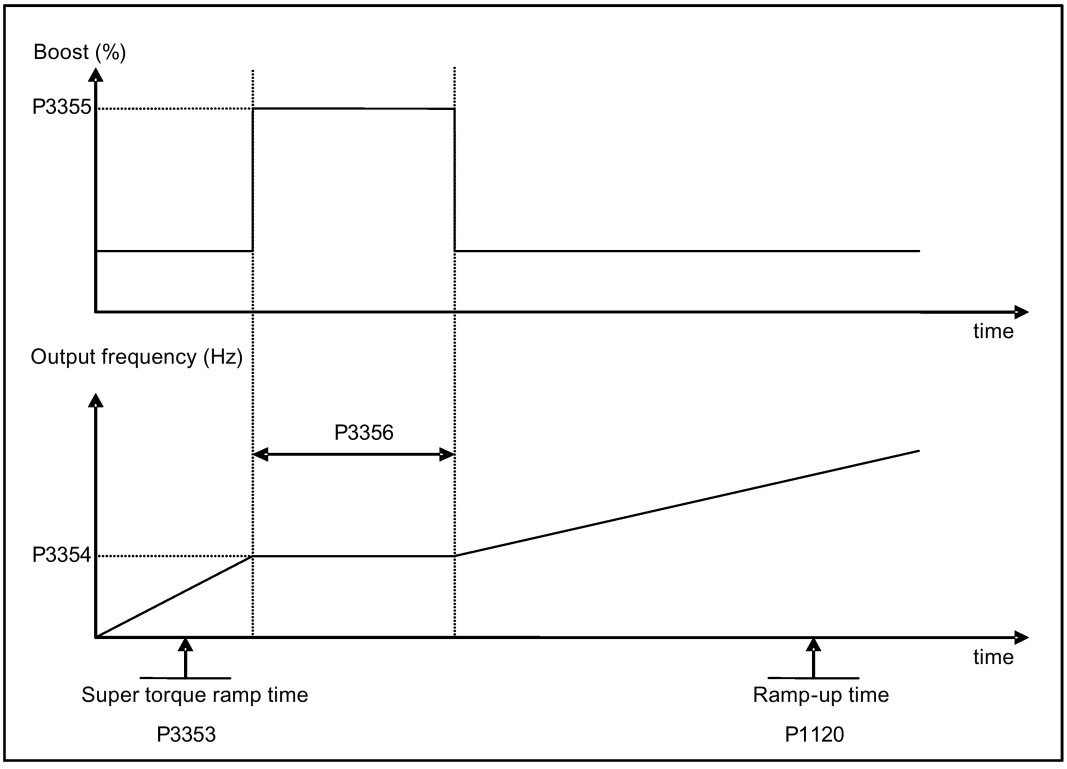 							

Parameter	Function	Range	Factory default	Can be changed	Scaling	Data set	Data type	Acc. Level
	Hammer Start Operation: 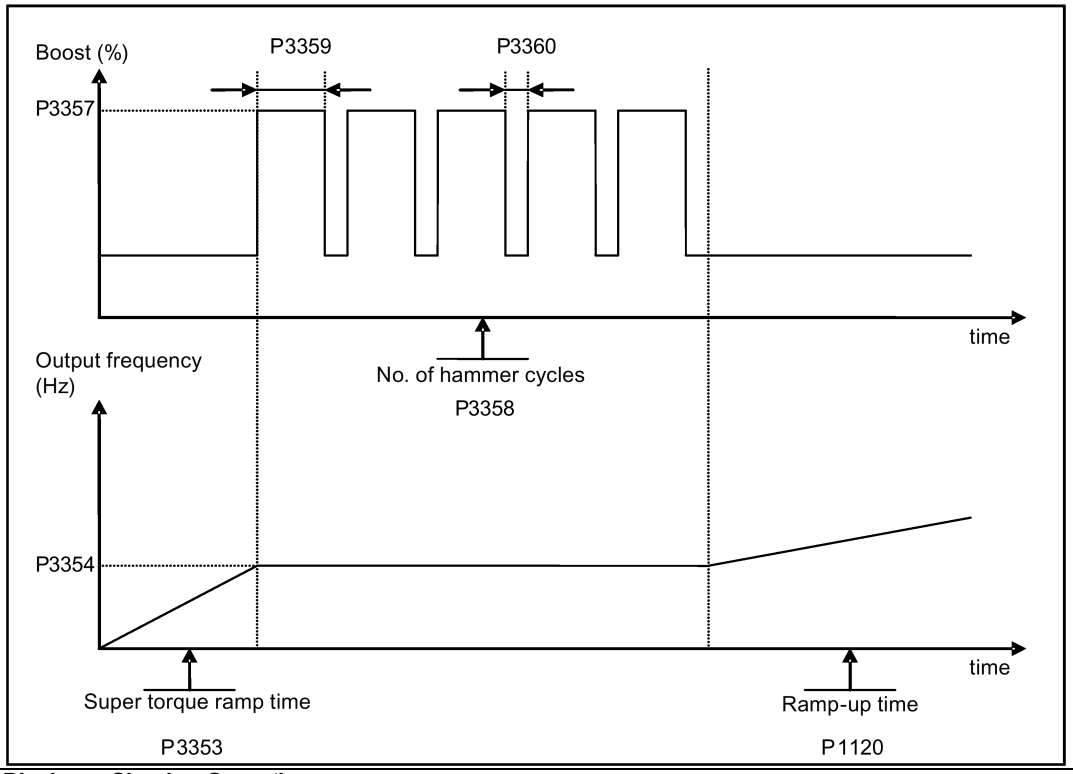							
	Blockage Clearing Operation: 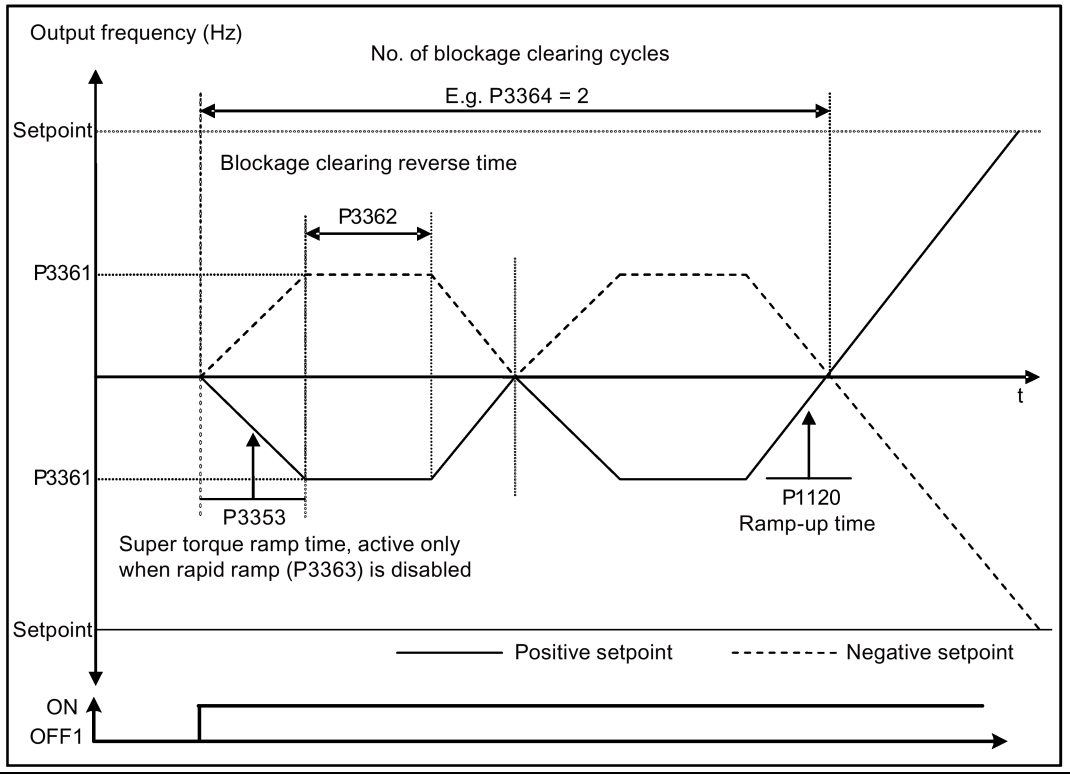							

Parameter	Function	Range	Factory default	Can be changed	Scaling	Data set	Data type	Acc. Level
	0	Super torque modes disabled						
	1	Super torque enabled						
	2	Hammer start enabled						
	3	Blockage clearing enabled						
Index:	[0]	Inverter data set 0 (DDS0)						
	[1]	Inverter data set 1 (DDS1)						
	[2]	Inverter data set 2 (DDS2)						
Note:	When the value of P3350 is changed, the value of P3353 is changed as follows: • P3350 = 2: P3353 = 0.0s • P3350 ≠ 2: P3353 = default The ramp time of 0s gives an additional 'kicking' effect when hammer start is in use. This setting can be overridden by the operator. If blockage clearing mode is enabled (P3350 = 3), make sure that reverse direction is not inhibited, i.e. P1032 = P1110 = 0.							
P3351[0...2]	**BI: Super torque enable**	0 - 4294967295	0	T	-	CDS	U32	2
	Defines source of the super torque enable when P3352 = 2.							
Dependency:	Applies only when P3352 = 2.							
P3352[0...2]	**Super torque startup mode**	0 - 2	1	T	-	-	U16	2
	Defines when the super torque function becomes active.							
	0	Enabled on first run after power-up						
	1	Enabled on every run						
	2	Enabled by digital input						
Index:	See P3350							
Dependency:	If P3352 = 2, enable source is defined by P3351							
P3353[0...2]	**Super torque ramp time [s]**	0.0 - 650.0	5.0	T	-	-	Float	2
	Defines the ramp time to be used for all super torque functions. Overrides the P1120/P1060 when inverter is ramping to super torque/hammer start frequency (P3354) or the blockage clearing frequency (P3361).							
Index:	See P3350							
Dependency:	The value of this parameter is changed by the setting of P3350. See the description of P3350.							
P3354[0...2]	**Super torque frequency [Hz]**	0.0 - 550.0	5.0	T	-	-	Float	2
	Defines the frequency at which the additional boost is applied for super torque and hammer start modes.							
Index:	See P3350							
P3355[0...2]	**Super torque boost level [%]**	0.0 - 200.0	150.0	T	PERCENT	-	Float	2
	The magnitude of the Super Torque boost is calculated as follows: V_ST = P0305 * Rsadj * (P3355/100) Note: Rsadj = stator resistance adjusted for temperature Rsadj = (r0395/100) * (P0304/(sqrt(3) * P0305)) * P0305 * sqrt(3)							

Parameter	Function	Range	Factory default	Can be changed	Scaling	Data set	Data type	Acc. Level
Index:	See P3350							
Dependency:	Up to 200% of rated motor current (P0305) or limit of inverter.							
Note:	The Super Torque boost is calculated in the same way as Continuous Boost (P1310). As the stator resistance is used, the calculated voltage is only accurate at 0 Hz. Thereafter, it will vary in the same way as Continuous Boost. Setting in P0640 (motor overload factor [%]) limits the boost.							
P3356[0...2]	**Super torque boost time [s]**	0.0 - 20.0	5.0	T	-	-	Float	2
	Sets the time for which the additional boost will be applied, when the output frequency is held at P3354 Hz.							
Index:	See P3350							
P3357[0...2]	**Hammer start boost level [%]**	0.0 - 200.0	150.0	T	PERCENT	-	Float	2
	The magnitude of the Hammer Start boost is calculated as follows: V_HS = P0305 * Rsadj * (P3357/100) Note: Rsadj = stator resistance adjusted for temperature Rsadj = (r0395/100) * (P0304/(sqrt(3) * P0305)) * P0305 * sqrt(3)							
Index:	See P3350							
Dependency:	Up to 200% of rated motor current (P0305) or limit of inverter.							
Note:	The Hammer Start boost is calculated in the same way as Continuous Boost (P1310). As the stator resistance is used, the calculated voltage is only accurate at 0Hz. Thereafter, it will vary in the same way as Continuous Boost. Setting in P0640 (motor overload factor [%]) limits the boost.							
P3358[0...2]	**Number of hammer cycles**	1 - 10	5	C, T	-	-	U16	2
	The number of times the hammer start boost level (P3357) is applied.							
Index:	See P3350							
P3359[0...2]	**Hammer on time [ms]**	0 - 1000	300	T	-	-	U16	2
	Time for which the additional boost is applied for each repetition.							
Index:	See P3350							
Dependency:	The time must be at least 3 x motor magnetization time (P0346).							
P3360[0...2]	**Hammer off Time [ms]**	0 - 1000	100	T	-	-	U16	2
	Time for which the additional boost is removed for each repetition.							
Index:	See P3350							
Note:	During this time, the boost level drops to the level defined by P1310 (continuous boost).							
P3361[0...2]	**Blockage clearing frequency [Hz]**	0.0 - 550.0	5.0	T	-	-	Float	2
	Defines the frequency at which the inverter runs in the opposite direction to the setpoint during the blockage clearing reverse sequence.							
Index:	See P3350							
P3362[0...2]	**Blockage clearing reverse time [s]**	0.0 - 20.0	5.0	T	-	-	Float	2
	Sets the time for which the inverter runs in the opposite direction to the setpoint during the reverse sequence.							
Index:	See P3350							

Parameter	Function	Range	Factory default	Can be changed	Scaling	Data set	Data type	Acc. Level
P3363[0...2]	**Enable rapid ramp**	0 - 1	0	T	-	-	U16	2
	Selects whether the inverter ramps to, or starts directly from, the blockage clearing frequency (P3361).							
	0	Disable rapid ramp for blockage clearing						
	1	Enable rapid ramp for blockage clearing						
Index:	See P3350							
Note:	If P3363 = 1, the output jumps to the reverse frequency - this introduces a "kicking" effect which helps to clear the blockage.							
P3364[0...2]	**Number of blockage clearing cycles**	1 - 10	1	T	-	-	U16	2
	The number of times the blockage clearing reversing cycle is repeated.							
Index:	See P3350							
r3365	**CO/BO: Status word: super torque**	-	-	-	-	-	U16	2
	Shows the operational status of the Super Torque function, while active.							
	Bit	**Signal name**			**1 signal**		**0 signal**	
	00	Super Torque Active			Yes		No	
	01	Super Torque Ramping			Yes		No	
	02	Super Torque Boost On			Yes		No	
	03	Super Torque Boost Off			Yes		No	
	04	Blockage Clearing Reverse On			Yes		No	
	05	Blockage Clearing Reverse Off			Yes		No	
P3852[0...2]	**BI: Enable frost protection**	0 - 4294967295	0	U, T	-	CDS	U32	2
	Defines command source of protection enable command. If binary input is equal to one, then protection will be initiated. If inverter is stopped and protection signal becomes active, protection measure is applied as follows: • If P3853 ≠ 0, frost protection is applied by applying the given frequency to the motor • If P3853 = 0, and P3854 ≠ 0, condensation protection is applied by applying the given current to the motor							
Note:	The protection function may be overridden under the following circumstances: • If inverter is running and protection signal becomes active, signal is ignored • If inverter is turning motor due to active protection signal and a RUN command is received, RUN command overrides frost signal • Issuing an OFF command while protection is active will stop the motor							
P3853[0...2]	**Frost protection frequency [Hz]**	0.00 - 550.00	5.00	U, T	-	DDS	Float	2
	The frequency applied to the motor when frost protection is active.							
Dependency:	See also P3852.							

Parameter	Function	Range	Factory default	Can be changed	Scaling	Data set	Data type	Acc. Level
P3854[0...2]	**Condensation protection current [%]**	0 - 250	100	U, T	-	DDS	U16	2
	The DC current (as a percentage of nominal current) which is applied to the motor when condensation protection is active.							
Dependency:	See also P3852.							
P3900	**End of quick commissioning**	0 - 3	0	C(1)	-	-	U16	1
	Performs calculations necessary for optimized motor operation. After completion of calculation, P3900 and P0010 (parameter groups for commissioning) are automatically reset to their original value 0.							
	0	No quick commissioning						
	1	End quick commissioning with factory reset						
	2	End quick commissioning						
	3	End quick commissioning only for motor data						
Dependency:	Changeable only when P0010 = 1 (quick commissioning).							
Note:	P3900 = 1: When setting 1 is selected, only the parameter settings carried out via the commissioning menu "Quick commissioning" are retained; all other parameter changes, including the I/O settings, are lost. Motor calculations are also performed. P3900 = 2: When setting 2 is selected, only those parameters, which depend on the parameters in the commissioning menu "Quick commissioning" (P0010 = 1) are calculated. The I/O settings are also reset to default and the motor calculations performed. P3900 = 3: When setting 3 is selected, only the motor and controller calculations are performed. Exiting quick commissioning with this setting saves time (for example, if only motor rating plate data have been changed). Calculates a variety of motor parameters, overwriting previous values. These include P0344 (motor weight), P0350 (stator resistance), P2000 (reference frequency), P2002 (reference current). When transferring P3900, the inverter uses its processor to carry out internal calculations. Communications - both via USS as well as via the Fieldbus - are interrupted for the time that it takes to make these calculations. This can result in the following error messages at the connected SIMATIC S7 control (communications via Fieldbus): • Parameter fault 30 • Inverter fault 70 • Inverter fault 75							
r3930[0...4]	**Inverter data version**	-	-	-	-	-	U16	3
	Displays the A5E number and the inverter data versions.							
Index:	[0]	A5E 1st 4 digits						
	[1]	A5E 2nd 4 digits						
	[2]	Logistic Version						
	[3]	Fixed Data Version						
	[4]	Calib Data Version						

Parameter	Function	Range	Factory default	Can be changed	Scaling	Data set	Data type	Acc. Level
P3950	**Access of hidden parameters**	0 - 255	0	U, T	-	-	U16	4
	Accesses special parameters for development (expert only) and factory functionality (calibration parameter).							
r3954[0...12]	**CM info and GUI ID**	-	-	-	-	-	U16	4
	Used to classify firmware (only for SIEMENS internal purposes).							
Index:	[0]	CM label (increment/branch)						
	[1]	CM label (counter)						
	[2]	CM label						
	[3...10]	GUI ID						
	[11]	GUI ID major release						
	[12]	GUI ID minor release						
r3978	**BICO counter**	-	-	-	-	-	U32	4
	Counts the number of changed BICO links.							
P3981	**Reset active fault**	0 - 1	0	T	-	-	U16	4
	Resets active faults when changed from 0 to 1.							
	0	No fault reset						
	1	Reset fault						
Note:	See P0947 (last fault code) Automatically reset to 0.							
P3984	**Client telegram off time [ms]**	100 - 10000	1000	T	-	-	U16	3
	Defines time after which a fault will be generated (F73) if no telegram is received from the client.							
Dependency:	Setting 0 = watchdog disabled							
r3986[0...1]	**Number of parameters**	-	-	-	-	-	U16	4
	Number of parameters on the inverter.							
Index:	[0]	Read only						
	[1]	Read & write						
r4000 - r4064	**Reserved**							
P7844	**Acceptance test, confirmation**	0 - 2	0	T	-	-	U16	3
	After an automatic download from the SD card at startup, this parameter will be automatically set to 1. Also a fault F395 will be set. With setting to P7844 = 0 you quit F395 and confirm the parameter settings. Setting this parameter to 2 is only possible if an automatic download has been performed at startup. In this case the download will be undone and the previously stored parameters will be enabled.							
	0	Acceptance test/confirmation OK						
	1	Acceptance test/confirmation is pending						
	2	Undo clone						
Note:	If no automatic download from the SD card has been performed during startup the setting 2 is not possible. If the clone file contains user defaults and the cloning at startup is rejected with P7844 = 2, parameters are set to the user defaults in the clone file instead of the previously saved values.							

Parameter	Function	Range	Factory default	Can be changed	Scaling	Data set	Data type	Acc. Level
P8458	**Clone control**	0 - 4	2	C, T	-	-	U16	3
	This parameter specifies whether a cloning at startup will be performed. The File clone00.bin will be used. If no SD card is inserted there will be a normal startup.							
	0	No startup cloning						
	1	Clone at startup once						
	2	Clone at startup always						
	3	Clone at startup once, except the motor data						
	4	Clone at startup always, except the motor data						
Note:	Default value is 2. After first cloning the parameter is set to 0. If an SD card is inserted without a valid file the inverter will set a fault F61/F63/F64 which can only be cleared by a power-cycle. The fault is signaled by a flashing RUN LED (Commissioning). The SF LED is not activated. P8458 will not be changed by performing a factory reset.							
P8553	**Menu type**	0 - 1	0	U, T	-	-	U16	1
	Selects whether to have menus with no text or menus with some text on the BOP.							
	0	Menus with no text						
	1	Menus with some text						

Faults and alarms

9

Note

If there are multiple active faults and alarms, the BOP first displays all faults one after another. Once all faults are displayed, it displays all alarms in succession.

9.1 Faults

Immediately when a fault occurs the fault icon ⊗ shows and the display transitions to the faults screen. The faults screen displays the fault number proceeded by "F".

Acknowledging/clearing faults

- To navigate through the current list of faults, press ▲ or ▼.
- To view the inverter status at fault, press OK (> 2 s); to return to the fault code display, press OK (< 2 s).
- To clear/acknowledge the fault, press OK or acknowledge externally if the inverter has been set up so; to ignore the fault, press M.

After you acknowledge or ignore the fault, the screen returns to the previous display. The fault icon remains active until the fault is cleared/acknowledged.

Note

Under the following circumstances, the faults screen displays again:

- If the fault has not been cleared and the I button is pressed, the faults screen displays again.
- If there is no key press for 60 seconds.

If a fault is active and there has been no key press for 60 seconds, the backlight (P0070) flashes.

Viewing inverter status at fault

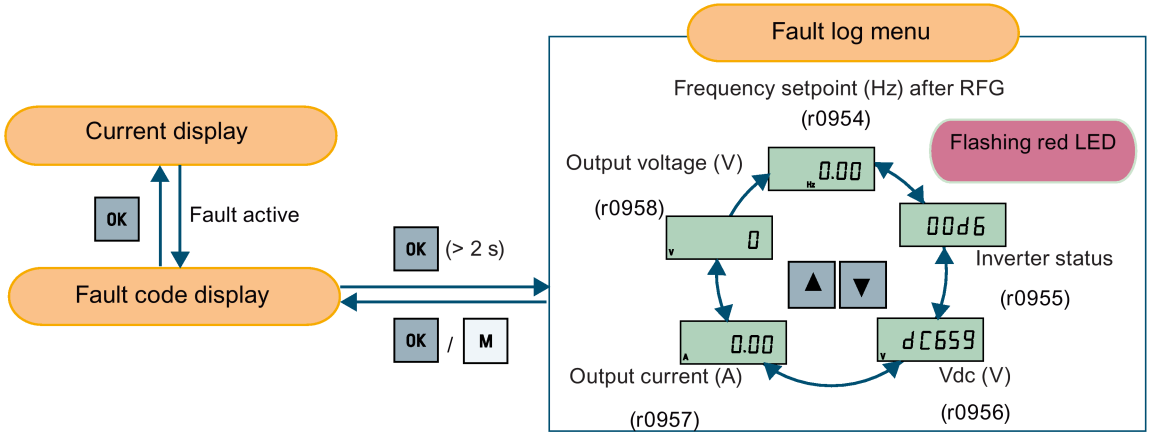

Fault code list

Fault	Cause	Remedy
F1 Overcurrent	• Motor power (P0307) does not correspond to the inverter power (r0206). • Motor lead short circuit • Earth faults r0949 = 0: Hardware reported r0949 = 1: Software reported r0949 = 22: Hardware reported	Check the following: • Motor power (P0307) must correspond to inverter power (r0206). • Cable length limits must not be exceeded. • Motor cable and motor must have no short-circuits or earth faults. • Motor parameters must match the motor in use. • Value of stator resistance (P0350) must be correct. • Motor must not be obstructed or overloaded. • Increase ramp-up time (P1120) • Reduce starting boost level (P1312)
F2 Overvoltage	• Main supply voltage too high • Motor is in regenerative mode r0949 = 0: Hardware reported r0949 = 1 or 2: Software reported	Check the following: • Supply voltage (P0210) must lie within limits indicated on rating plate. • Ramp-down time (P1121) must match inertia of load. • Required braking power must lie within specified limits. • Vdc controller must be enabled (P1240) and parameterized properly. **Note:** Regenerative mode can be caused by fast ramp downs or if the motor is driven by an active load. Higher inertia requires longer ramp times; otherwise, apply braking resistor.
F3 Undervoltage	• Main supply failed. • Shock load outside specified limits. r0949 = 0: Hardware reported r0949 = 1 or 2: Software reported	Check supply voltage.

Fault	Cause	Remedy
F4 Inverter over-temperature	• Inverter overloaded • Ventilation inadequate • Pulse frequency too high • Surrounding temperature too high • Fan inoperative	Check the following: • Load or load cycle too high? • Motor power (P0307) must match inverter power (r0206) • Pulse frequency must be set to default value • Surrounding temperature too high? • Fan must turn when inverter is running
F5 Inverter I^2t	• Inverter overloaded. • Load cycle too demanding. • Motor power (P0307) exceeds inverter power capability (r0206).	Check the following: • Load cycle must lie within specified limits. • Motor power (P0307) must match inverter power (r0206) **Note:** F5 cannot be cleared until the inverter overload utilization (r0036) is lower than the inverter I^2t warning (P0294).
F6 Chip temperature rise exceeds critical levels	• Load at start-up is too high • Load step is too high • Ramp-up rate is too fast	Check the following: • Load or load step too high? • Increase ramp-up time (P1120). • Motor power (P0307) must match inverter power (r0206). • Use setting P0290 = 0 or 2 for preventing F6.
F11 Motor overtemperature	• Motor overloaded	Check the following: • Load or load step too high? • Motor nominal overtemperatures (P0626 - P0628) must be correct • Motor temperature warning level (P0604) must match
	• This fault may occur if small motors are used and run at a frequency below 15 Hz, even though the motor temperature is within limits.	Check the following: • Motor current is not in excess of the motor nominal current as indicated by the motor rating plate • Physical temperature of the motor lies within limits If these two conditions are satisfied, then set parameter P0335 = 1.
F12 Inverter temperature signal lost	Wire breakage of inverter temperature (heat sink) sensor.	
F20 DC ripple too high	The calculated DC ripple level has exceeded the safe threshold. This is commonly caused by loss of one of the mains input phases.	Check the mains supply wiring.
F23 Output current ripple too high	The calculated output ripple level has exceeded the safe threshold. This is commonly caused by loss of one of the output phases.	Check the output wiring.
F35 Maximum number of auto restart attempts exceeded	Auto restart attempts exceed value of P1211.	

Fault	Cause	Remedy
F41 Motor data identification failure	Motor data identification failed. • r0949 = 0: No load applied • r0949 = 1: Current limit level reached during identification. • r0949 = 2: Identified stator resistance less than 0.1% or greater than 100%. • r0949 = 30: Current controller at voltage limit • r0949 = 40: Inconsistency of identified dataset, at least one identification failed Percentage values based on the impedance Zb = Vmot,nom/sqrt(3)/Imot,nom	Check the following: • r0949 = 0: is the motor connected to the inverter? • r0949 = 1 - 49: are the motor data in P0304 - P0311 correct? • Check what type of motor wiring is required (star, delta).
F51 Parameter EEPROM fault	Read or write failure while access to EEPROM. This can also be caused by the EEPROM being full, too many parameters have been changed.	• Must be power-cycled to cancel this bug as some parameters may not be read correct. • Factory reset and new parameterization, if power-cycle does not remove fault. • Change some parameters back to default values if the EEPROM is full, then power-cycle. • Change inverter. **Note:** • r0949 = 1: EEPROM full • r0949 = 1000 + block No: reading data block failed • r0949 = 2000 + block No: reading data block timeout • r0949 = 3000 + block No: reading data block CRC failed • r0949 = 4000 + block No: writing data block failed • r0949 = 5000 + block No: writing data block timeout • r0949 = 6000 + block No: writing data block verify failed • r0949 = 7000 + block No: reading data block at wrong time • r0949 = 8000 + block No: writing data block at wrong time • r0949 = 9000 + block No: factory reset did not work because restart or power failure

Fault	Cause	Remedy
F52 Inverter software fault	Read failure for inverter information or invalid data.	**Note:** • r0949 = 1: Failed reading inverter identity • r0949 = 2: Inverter identity wrong • r0949 = 3: Failed reading inverter version • r0949 = 4: Inverter version wrong • r0949 = 5: Start of Part 1 inverter data wrong • r0949 = 6: Inverter number of temperature sensor wrong • r0949 = 7: Inverter number of application wrong • r0949 = 8: Start of Part 3 inverter data wrong • r0949 = 9: Reading inverter data string wrong • r0949 = 10: Inverter CRC failed • r0949 = 11: Inverter is blank • r0949 = 15: Failed CRC of inverter block 0 • r0949 = 16: Failed CRC of inverter block 1 • r0949 = 17: Failed CRC of inverter block 2 • r0949 = 20: Inverter invalid • r0949 = 30: Directory size wrong • r0949 = 31: Directory ID wrong • r0949 = 32: Invalid block • r0949 = 33: File size wrong • r0949 = 34: Data section size wrong
F52 (continued)		• r0949 = 35: Block section size wrong • r0949 = 36: RAM size exceeded • r0949 = 37: Parameter size wrong • r0949 = 38: Device header wrong • r0949 = 39: Invalid file pointer • r0949 = 40: Scaling block version wrong • r0949 = 41: Calibration block version wrong • r0949 = 50: Wrong serial number format • r0949 = 51: Wrong serial number format start • r0949 = 52: Wrong serial number format end • r0949 = 53: Wrong serial number format month • r0949 = 54: Wrong serial number format day • r0949 = 1000 + addr: Inverter read data failed • r0949 = 2000 + addr: Inverter write data failed • r0949 = 3000 + addr: Inverter read data wrong time • r0949 = 4000 + addr: Inverter write data wrong time • r0949 = 5000 + addr: Inverter read data invalid • r0949 = 6000 + addr: Inverter write data invalid • Power-cycle inverter • Contact service department or change inverter

Fault	Cause	Remedy
F60 Asic timeout	Internal communications failure.	Check inverter. Fault appears sporadically: **Note:** • r0949 = 0: Hardware reported link fail • r0949 = 1: Software reported link fail • r0949 = 6: Feedback is not disabled for reading inverter data • r0949 = 7: During inverter download, message didn't transmit to disable feedback • Communication failure due to EMC problems • Check - and if necessary - improve EMC • Use EMC filter
F61 SD card parameter cloning failed	Parameter cloning failed. • r0949 = 0: The SD card is not connected or the card type is incorrect or the card failed to initialize for automatic cloning. • r0949 = 1: Inverter data cannot be written to the card. • r0949 = 2: Parameter cloning file is unavailable. • r0949 = 3: The SD card cannot read the file. • r0949 = 4: Reading data from the clone file failed (e.g., reading failed, data or checksum wrong).	• r0949 = 0: Use an SD card with FAT16 or FAT32 format , or fit an SD card to the inverter. • r0949 = 1: Check the SD card (for example, is the card memory full?) - format the card again to FAT16 or FAT32. • r0949 = 2: Put the correct named file in the correct directory /USER/SINAMICS/DATA. • r0949 = 3: Make sure file is accessible - recreate file if possible. • r0949 = 4: File has been changed - recreate file.
F62 Parameter cloning contents invalid	File exists but the contents are not valid control word corruption.	Recopy and ensure operation completes.
F63 Parameter cloning contents incompatible	File exists but was not the correct inverter type.	Ensure clone from compatible inverter type.
F64 Inverter attempted to do an automatic clone during startup	No Clone00.bin file in the correct directory /USER/SINAMICS/DATA.	If an automatic clone is required: • Insert the SD card with correct file and power-cycle. If no automatic clone is required: • Remove the card if not needed and power-cycle. • Reset P8458 = 0 and power-cycle. **Note:** Fault can only be cleared by a power-cycle.
F70 I/O Extension Module communication fault	Communication is no longer established with the I/O Extension Module.	Reconnect the module and check whether it is operating correctly. Acknowledge the fault. If the fault persists, replace the module.

Fault	Cause	Remedy
F71 USS setpoint fault	No setpoint values from USS during telegram off time	Check USS master
F72 USS/MODBUS setpoint fault	No setpoint values from USS/MODBUS during telegram off time	Check USS/MODBUS master
F80 Signal lost on analog input	• Broken wire • Signal out of limits	
F85 External fault	External fault triggered via command input via control word 2, bit 13.	• Check P2106. • Disable control word 2 bit 13 as command source. • Disable terminal input for fault trigger.
F100 Watchdog reset	Software error	Contact service department or change inverter.
F101 Stack overflow	Software error or processor failure.	Contact service department or change inverter.
F200 Script error	Script of the internal inverter program has stopped running due to script errors except for forced exit.	Check the script and make necessary corrections.
F221 PID feedback below minimum value	PID feedback below minimum value P2268.	• Change value of P2268. • Adjust feedback gain.
F222 PID feedback above maximum value	PID feedback above maximum value P2267.	• Change value of P2267. • Adjust feedback gain.
F350 Configuration vector for the inverter failed	During startup the inverter checks if the configuration vector (SZL vector) has been programmed correctly and if hardware matches the programmed vector. If not the inverter will trip. • r0949 = 1: Internal failure - no hardware configuration vector available. • r0949 = 2: Internal failure - no software configuration vector available. • r0949 = 11: Internal failure - inverter code not supported. • r0949 = 12: Internal failure - software vector not possible. • r0949 = 13: Wrong power module fitted. • r0949 > 1000: Internal failure - wrong I/O board fitted.	Internal failures cannot be fixed. r0949 = 13 - Make sure the right power module is fitted. **Note:** Fault needs power-cycle to be acknowledged.

Fault	Cause	Remedy
F395 Acceptance test/confirmation pending	This fault occurs after a startup clone. It can also be caused by a faulty read from the EEPROM, see F51 for more details. A startup clone could have changed and might not match the application. This parameter set needs to be checked before the inverter can start a motor. • r0949 = 3/4: Inverter data change • r0949 = 5: Startup clone via an SD card has been performed • r0949 = 10: Previous startup clone was aborted	The current parameter set needs to be checked and confirmed by clearing the fault.
F410 Cavitation protection failure	Conditions exist for cavitation damage. Cavitation damage is damage caused to a pump in pumping systems when the fluid is not flowing sufficiently. This can lead to heat build up and subsequent damage to the pump.	If cavitation is not occurring, reduce the cavitation threshold P2361, or increase the cavitation protection delay. Ensure sensor feedback is working.
F452 Load monitoring trip	Load conditions on motor indicate belt failure or mechanical fault. • r0949 = 0: trip low torque/speed • r0949 = 1: trip high torque/speed	Check the following: • No breakage, seizure or obstruction of inverter train. • Apply lubrication if required. If using an external speed sensor, check the following parameters for correct function: - P2192 (delay time for permitted deviation) - P2182 (threshold frequency f1) - P2183 (threshold frequency f2) - P2184 (threshold frequency f3) If using a specific torque/speed range, check parameters: - P2182 (threshold frequency 1) - P2183 (threshold frequency 2) - P2184 (threshold frequency 3) - P2185 (upper torque threshold 1) - P2186 (lower torque threshold 1) - P2187 (upper torque threshold 2) - P2188 (lower torque threshold 2) - P2189 (upper torque threshold 3) - P2190 (lower torque threshold 3) - P2192 (delay time for permitted deviation)

9.2 Alarms

If an alarm is activated the alarm icon ⚠ shows immediately and then the display shows the alarm code proceeded by "A".

Note

Note that alarms cannot be acknowledged. They are cleared automatically once the warning has been rectified.

Alarm code list

Alarm	Cause	Remedy
A501 Current limit	• Motor power does not correspond to the inverter power • Motor leads are too long • Earth faults	See F1.
	• Small motors (120 W) under FCC and light load may cause a high current	Use V/f operation for very small motors
A502 Overvoltage limit	Overvoltage limit is reached. This warning can occur during ramp down, if the Vdc controller is disabled (P1240 = 0).	If this warning is displayed permanently, check inverter input voltage.
A503 Undervoltage limit	• Main supply failed. • Main supply and consequently DC-link voltage (r0026) below specified limit.	Check main supply voltage.
A504 Inverter overtemperature	Warning level of inverter heat sink temperature, warning level of chip junction temperature, or allowed change in temperature on chip junction is exceeded, resulting in pulse frequency reduction and / or output frequency reduction (depending on parameterization in P0290).	**Note:** r0037[0]: Heat sink temperature r0037[1]: Chip junction temperature (includes heat sink) Check the following: • Surrounding temperature must lie within specified limits • Load conditions and load steps must be appropriate • Fan must turn when inverter is running
A505 Inverter I^2t	Warning level exceeded, current will be reduced if parameterized (P0610 = 1).	Check that load cycle lies within specified limits.
A506 IGBT junction temperature rise warning	Overload warning. Difference between heat sink and IGBT junction temperature exceeds warning limits.	Check that load steps and shock loads lie within specified limits.
A507 Inverter temperature signal lost	Inverter heat sink temperature signal loss. Possible sensor fallen off.	Contact service department or change inverter.

Alarm	Cause	Remedy
A511 Motor overtemperature I^2t	• Motor overloaded. • Load cycles or load steps too high.	Independently of the kind of temperature determination check: • P0604 motor temperature warning threshold • P0625 motor surrounding temperature • Check if name plate data is correct. If not, perform quick commissioning. Accurate equivalent circuit data can be found by performing motor identification (P1900 = 2). • Check if motor weight (P0344) is reasonable. Change if necessary. • With P0626, P0627, and P0628 the standard overtemperature can be changed, If the motor is not a SIEMENS standard motor.
A535 Braking resistor overload	The braking energy is too large. The braking resistor is not suited for the application.	Reduce the braking energy. Use a braking resistor with a higher rating.
A541 Motor data identification active	Motor data identification (P1900) selected or running.	
A600 RTOS overrun warning	Internal time slice overrun	Contact service department.
A910 Vdc_max controller deactivated	Occurs • if main supply voltage (P0210) is permanently too high. • if motor is driven by an active load, causing motor to go into regenerative mode. • at very high load inertias, when ramping down. If warning A910 occurs while the inverter is in standby (output pulses disabled) and an ON command is subsequently given, the Vdc_max controller (A911) will not be activated unless warning A910 is rectified.	Check the following: • Input voltage must lie within range. • Load must be match. • In certain cases apply braking resistor.
A911 Vdc_max controller active	The Vdc_max controller works to keep the DC-link voltage (r0026) below the level specified in r1242.	Check the following: • Supply voltage must lie within limits indicated on rating plate. • Ramp-down time (P1121) must match inertia of load. **Note:** Higher inertia requires longer ramp times; otherwise, apply braking resistor.

Alarm	Cause	Remedy
A912 Vdc_min controller active	The Vdc_min controller will be activated if the DC-link voltage (r0026) falls below the level specified in r1246. The kinetic energy of the motor is used to buffer the DC-link voltage, thus causing deceleration of the inverter! So short mains failures do not necessarily lead to an undervoltage trip. Note that this warning may also occur on fast ramp-ups.	
A921 Analog output parameters not set properly	Analog output parameters (P0777 and P0779) should not be set to identical values, since this would produce illogical results.	Check the following: • Parameter settings for output identical • Parameter settings for input identical • Parameter settings for output do not correspond to analog output type Set P0777 and P0779 to different values.
A922 No load applied to inverter	No Load is applied to the inverter. As a result, some functions may not work as under normal load conditions.	Check that motor is connected to inverter.
A923 Both JOG left and JOG right are requested	Both JOG right and JOG left (P1055/P1056) have been requested. This freezes the RFG output frequency at its current value.	Do not press JOG right and left simultaneously.
A930 Cavitation protection warn	Conditions exist for possible cavitation damage.	See F410.
A936 PID autotuning active	PID autotuning (P2350) selected or running	Warning disappears when PID autotuning has finished.
A952 Load monitoring warning	Load conditions on motor indicate belt failure or mechanical fault.	See F452.

Technical specifications

A

Line supply characteristics

	Three phase AC 400 V inverters	Single phase AC 230 V inverters
Voltage range	380 V AC to 480 V AC [1] (tolerance: -15% to +10%) 47 Hz to 63 Hz Current derating at high input voltages: 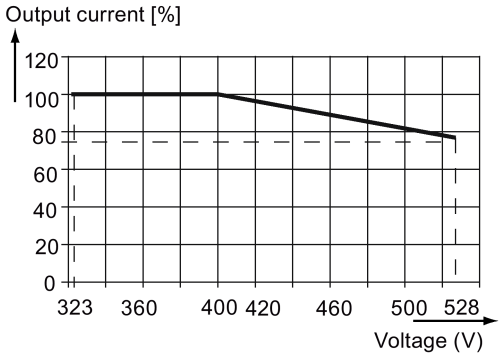 **Note**: For the current derating at 480 V at the default 4 kHz switching frequency and 40 °C surrounding air temperature, refer to the table in Section "Components of the inverter system (Page 17)".	200 V AC to 240 V AC [1] (tolerance: -15% to +10%) 47 Hz to 63 Hz Current derating at high input voltages: 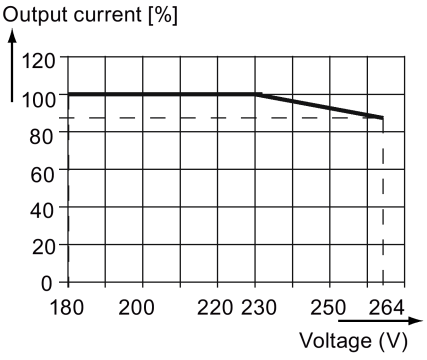
Overvoltage category	EN 60664-1 Category III	EN 60664-1 Category III
Permissible supply configuration	TN, TT, IT: FSA to FSE (unfiltered); FSE (filtered) [2] TN, TT with grounded neutral: FSA to FSE	TN, TT: FSAA to FSC (unfiltered) TN, TT with grounded neutral: FSAA to FSC IT: FSAA to FSAC (unfiltered)
Supply environment	Second environment (industrial power network)	First environment (residential power network)

[1] When the input voltage is below the rated value, current deratings are permissible and therefore the voltage-dependent speed and/or torque may be reduced.

[2] To operate FSE (filtered) on IT power supply, make sure you remove the screw for the EMC filter.

Overload capability

Power rating (kW)	Average output current	Overload current	Maximum overload cycle
0.12 to 15	100% rated	150% rated for 60 seconds	150% rated for 60 seconds followed by 94.5% rated for 240 seconds
18.5 (HO)/22 (HO)			
22 (LO)/30 (LO)		110% rated for 60 seconds	110% rated for 60 seconds followed by more than 98% rated for 240 seconds

EMC requirements

Note

Install all inverters in accordance with the manufacturer's guidelines and in accordance with good EMC practices.

Use copper screened cable. For the maximum motor cable lengths, refer to Section "Terminal description (Page 39)".

Do not exceed the default switching frequency.

	Three phase AC 400 V inverters	Single phase AC 230 V inverters
ESD	EN 61800-3	EN 61800-3
Radiated immunity		
Burst		
Surge		
Conducted immunity		
Voltage distortion immunity		
Conducted emissions	Three phase AC 400 V filtered inverters:	Single phase AC 230 V filtered inverters:
Radiated emissions	EN 61800-3 Category C2/C3	EN 61800-3 Category C1/C2

Maximum power losses

Three phase AC 400 V inverters																	
Frame size		FSA						FSB		FSC	FSD			FSE			
Power rating	(kW)	0.37	0.55	0.75	1.1	1.5	2.2	3	4	5.5	7.5	11	15	18.5	22	22	30
														HO	LO	HO	LO
	(hp)	0.75	0.75	1	1.5	2	3	5	5	7.5	10	15	20	25	30	30	40
														HO	LO	HO	LO
Maximum power loss (w) [1]		25	28	33	43	54	68	82	100	145	180	276	338	387	475	457	626

[1] With I/O fully loaded

Single phase AC 230 V inverters												
Frame size		FSAA/FSAB					FSAC		FSB		FSC	
Power rating	(kW)	0.12	0.25	0.37	0.55	0.75	1.1	1.5	1.1	1.5	2.2	3.0
	(hp)	0.17	0.33	0.5	0.75	1	1.5	2	1.5	2	3	4
Maximum power loss (w) [1]		14	22	29	39	48	57	87	72	95	138	177

[1] With I/O fully loaded

Note

Power losses are given for nominal supply voltage, default switching frequency, and rated output current. Changing these factors may result in increased power losses.

Harmonic currents

In order that you may operate a 230 V V20 inverter in the first environment, Category C2, you must observe the limit values for harmonic currents. V20 inverters are professional equipment for use in trades, professions or industries and are not intended for sale to the general public.

Note

Observing the limit values for harmonic currents

With respect to the compliance with limits for harmonic currents, the EMC product standard EN 61800-3 for V20 230 V inverters refers to compliance with standards EN 61000-3-2 and EN 61000-3-12.

- V20 230 V inverters with the rated output power ≤1 kW and rated input current ≤ 16 A:

  It cannot be guaranteed that the limit values are complied with EN 61000-3-2. The installation person/company or company operating the professionally used device must obtain authorization from the grid operator to connect the device regarding the harmonic currents. For more information about typical harmonic currents of V20 230 V inverters, see the following table.

- V20 230 V inverters with the rated output power > 1 kW and rated input current ≤ 16 A:

  These devices are not subject to any limit values, and as a consequence can be connected to the public low-voltage grid without any prior consultation.

- V20 230 V inverters with the rated input current > 16 A and ≤ 75 A:

  It cannot be guaranteed that the limit values are complied with EN 61000-3-12. The installation person/company or company operating the professionally used device must obtain authorization from the grid operator to connect the device regarding the harmonic currents. For more information about typical harmonic currents of V20 230 V inverters, see the following table.

Typical harmonic currents of V20 230 V inverters

Single phase AC 230 V inverters	Typical harmonic current (% of rated input current) at U_K 4%										
	3rd	5th	7th	9th	11th	13th	17th	19th	23rd	25th	29th
Frame size AA/AB	42	40	37	33	29	24	15	11	4	2	1
Frame size AC	53	42	31	23	16	11	2	3	2	1	1
Frame size B	49	44	37	29	21	13	2	1	2	2	0
Frame size C	54	44	31	17	6	2	7	6	2	0	0

Output current deratings at different PWM frequencies and surrounding air temperatures

Three phase AC 400 V inverters													
Frame size	Power rating [kW]	Current rating [A] at PWM frequency PWM frequency range: 2 kHz to 16 kHz (default: 4 kHz)											
		2 kHz			4 kHz			6 kHz			8 kHz		
		40 °C	50 °C	60 °C	40 °C	50 °C	60 °C	40 °C	50 °C	60 °C	40 °C	50 °C	60 °C
A	0.37	1.3	1.0	0.7	**1.3**	1.0	0.7	1.1	0.8	0.5	0.9	0.7	0.5
A	0.55	1.7	1.3	0.9	**1.7**	1.3	0.9	1.4	1.0	0.7	1.2	0.9	0.6
A	0.75	2.2	1.8	1.1	**2.2**	1.8	1.1	1.9	1.3	0.9	1.5	1.1	0.8
A	1.1	3.1	2.6	1.6	**3.1**	2.6	1.6	2.6	1.9	1.3	2.2	1.6	1.1
A	1.5	4.1	3.4	2.1	**4.1**	3.4	2.1	3.5	2.5	1.7	2.9	2.1	1.4
A	2.2	5.6	4.6	2.8	**5.6**	4.6	2.8	4.8	3.4	2.4	3.9	2.8	2.0
B	3.0	7.3	6.3	3.7	**7.3**	6.3	3.7	6.2	4.4	3.1	5.1	3.7	2.6
B	4.0	8.8	8.2	4.4	**8.8**	8.2	4.4	7.5	5.3	3.7	6.2	4.4	3.1
C	5.5	12.5	10.8	6.3	**12.5**	10.8	6.3	10.6	7.5	5.3	8.8	6.3	4.4
D	7.5	16.5	14.5	8.3	**16.5**	14.5	8.3	14.0	9.9	6.9	11.6	8.3	5.8
D	11	25.0	21.0	12.5	**25.0**	21.0	12.5	21.3	15.0	10.5	17.5	12.5	8.8
D	15	31.0	28.0	15.5	**31.0**	28.0	15.5	26.4	18.6	13.0	21.7	15.5	10.9
E	18.5 (HO)	38.0	34.5	19.0	**38.0**	34.5	19.0	32.3	22.8	16.0	26.6	19.0	13.3
E	22 (LO)	45.0	40.5	22.5	**45.0**	40.5	22.5	38.3	27.0	18.9	31.5	22.5	15.8
E	22 (HO)	45.0	40.5	22.5	**45.0**	40.5	22.5	38.3	27.0	18.9	31.5	22.5	15.8
E	30 (LO)	60.0	53.0	30.0	**60.0**	53.0	30.0	51.0	36.0	25.2	42.0	30.0	21.0

Three phase AC 400 V inverters													
Frame size	Power rating [kW]	Current rating [A] at PWM frequency PWM frequency range: 2 kHz to 16 kHz (default: 4 kHz)											
		10 kHz			12 kHz			14 kHz			16 kHz		
		40 °C	50 °C	60 °C	40 °C	50 °C	60 °C	40 °C	50 °C	60 °C	40 °C	50 °C	60 °C
A	0.37	0.8	0.5	0.4	0.7	0.5	0.3	0.6	0.4	0.3	0.5	0.4	0.3
A	0.55	1.0	0.7	0.5	0.9	0.6	0.4	0.8	0.5	0.4	0.7	0.5	0.3
A	0.75	1.3	0.9	0.7	1.1	0.8	0.6	1.0	0.7	0.5	0.9	0.6	0.4
A	1.1	1.9	1.3	0.9	1.6	1.1	0.8	1.4	1.0	0.7	1.2	0.9	0.6
A	1.5	2.5	1.7	1.2	2.1	1.4	1.0	1.8	1.3	0.9	1.6	1.1	0.8
A	2.2	3.4	2.4	1.7	2.8	2.0	1.4	2.5	1.7	1.2	2.2	1.6	1.1
B	3.0	4.4	3.1	2.2	3.7	2.6	1.8	3.3	2.3	1.6	2.9	2.0	1.5
B	4.0	5.3	3.7	2.6	4.4	3.1	2.2	4.0	2.7	1.9	3.5	2.5	1.8
C	5.5	7.5	5.3	3.8	6.3	4.4	3.1	5.6	3.9	2.8	5.0	3.5	2.5
D	7.5	9.9	6.9	5.0	8.3	5.8	4.1	7.4	5.1	3.6	6.6	4.6	3.3
D	11	15.0	10.5	7.5	12.5	8.8	6.3	11.3	7.8	5.5	10.0	7.0	5.0
D	15	18.6	13.0	9.3	15.5	10.9	7.8	14.0	9.6	6.8	12.4	8.7	6.2
E	18.5 (HO)	22.8	16.0	11.4	19.0	13.3	9.5	17.1	11.8	8.4	15.2	10.6	7.6
E	22 (LO)	27.0	18.9	13.5	22.5	15.8	11.3	20.3	14.0	9.9	18.0	12.6	9.0
E	22 (HO)	27.0	18.9	13.5	22.5	15.8	11.3	20.3	14.0	9.9	18.0	12.6	9.0
E	30 (LO)	36.0	25.2	18.0	30.0	21.0	15.0	27.0	18.6	13.2	24.0	16.8	12.0

Single phase AC 230 V inverters													
Frame size	Power rating [kW]	Current rating [A] at PWM frequency PWM frequency range: 2 kHz to 16 kHz (default: 8 kHz)											
		2 kHz			4 kHz			6 kHz			8 kHz		
		40 °C	50 °C	60 °C	40 °C	50 °C	60 °C	40 °C	50 °C	60 °C	40 °C	50 °C	60 °C
AA/AB	0.12	0.9	0.6	0.5	0.9	0.6	0.5	0.9	0.6	0.5	**0.9**	0.7	0.5
AA/AB	0.25	1.7	1.2	0.9	1.7	1.2	0.9	1.7	1.2	0.9	**1.7**	1.4	0.9
AA/AB	0.37	2.3	1.6	1.2	2.3	1.6	1.2	2.3	1.6	1.2	**2.3**	1.8	1.2
AA/AB	0.55	3.2	2.2	1.6	3.2	2.2	1.6	3.2	2.2	1.6	**3.2**	2.3	1.6
AA/AB	0.75	4.2	2.9	2.1	4.2	2.9	2.1	4.2	2.9	2.1	**4.2**	3.2	2.1
AC	1.1	6.0	4.2	3.0	6.0	4.2	3.0	6.0	4.2	3.0	**6.0**	4.2	3.0
AC	1.5	7.8	5.5	3.9	7.8	5.5	3.9	7.8	5.5	3.9	**7.8**	5.5	3.9
B	1.1	6.0	4.2	3.0	6.0	4.2	3.0	6.0	4.2	3.0	**6.0**	4.2	3.0
B	1.5	7.8	5.5	3.9	7.8	5.5	3.9	7.8	5.5	3.9	**7.8**	5.5	3.9
C	2.2	11	7.7	5.5	11	7.7	5.5	11	7.7	5.5	**11**	7.7	5.5
C	3.0	13.6	9.5	6.8	13.6	9.5	6.8	13.6	9.5	6.8	**13.6**	9.5	6.8

Single phase AC 230 V inverters													
Frame size	Power rating [kW]	Current rating [A] at PWM frequency PWM frequency range: 2 kHz to 16 kHz (default: 8 kHz)											
		10 kHz			12 kHz			14 kHz			16 kHz		
		40 °C	50 °C	60 °C	40 °C	50 °C	60 °C	40 °C	50 °C	60 °C	40 °C	50 °C	60 °C
AA/AB	0.12	0.8	0.6	0.4	0.8	0.5	0.4	0.7	0.5	0.3	0.6	0.5	0.3
AA/AB	0.25	1.6	1.1	0.8	1.4	1.0	0.7	1.3	0.9	0.6	1.2	0.9	0.6
AA/AB	0.37	2.1	1.5	1.1	2.0	1.4	1.0	1.7	1.2	0.9	1.6	1.2	0.8
AA/AB	0.55	2.9	2.0	1.5	2.7	1.9	1.3	2.4	1.7	1.2	2.2	1.6	1.1
AA/AB	0.75	3.9	2.7	1.9	3.6	2.5	1.8	3.2	2.2	1.6	2.9	2.1	1.5
AC	1.1	5.5	3.8	2.8	5.1	3.6	2.5	4.5	3.1	2.2	4.2	3.0	2.1
AC	1.5	7.2	5.0	3.6	6.6	4.7	3.3	5.9	4.1	2.9	5.5	3.9	2.7
B	1.1	5.5	3.8	2.8	5.1	3.6	2.5	4.5	3.1	2.2	4.2	3.0	2.1
B	1.5	7.2	5.0	3.6	6.6	4.7	3.3	5.9	4.1	2.9	5.5	3.9	2.7
C	2.2	10.1	7.0	5.1	9.4	6.6	4.6	8.3	5.7	4.1	7.7	5.5	3.9
C	3.0	12.5	8.7	6.3	11.6	8.2	5.7	10.2	7.1	5.0	9.5	6.8	4.8

Motor control

Control methods	Linear V/F, quadratic V/F, multi-point V/F, V/F with FCC	
Output frequency range	Default range: 0 Hz to 550 Hz Resolution: 0.01 Hz	
Maximum overload cycle	Rated power 0.12 kW to 15 kW	150 % rated for 60 seconds followed by 94.5 % rated for 240 seconds
	Rated power 18.5 kW (HO)/22 kW (HO)	
	Rated power 22 kW (LO)/30 kW (LO)	110% rated for 60 seconds followed by more than 98% rated for 240 seconds

Mechanical specifications

Frame size		FSAA	FSAB	FSAC	FSA		FSB	FSC	FSD [1]	FSE
					with fan	without fan				
Outline dimensions (mm/inch)	W	68/2.7	68/2.7	90.8	90/3.5	90/3.5	140/5.5	184/7.24	240/9.4	245/9.6
	H	142/5.6	142/5.6	160.9	166/6.5	150/5.9	160/6.3	182/7.17	206.5/8.1	264.5/10.4
	D	107.8/4.2	127.8/5	147	145.5/5.7	145.5 (114.5 [2])/5.7(4.5 [2])	164.5/6.5	169/6.7	172.5/6.8	209/8.2
Mounting methods		• Cabinet panel mounting • Push-through mounting (FSB ... FSE)								

[1] Available for three phase AC 400 V inverters only.

[2] Depth of Flat Plate inverter (400 V 0.75 kW variant only).

Frame size		Net weight (kg)		Gross weight (kg)	
		unfiltered	filtered	unfiltered	filtered
Three phase AC 400 V inverters					
FSA	with fan	1.0	1.1	1.4	1.4
	without fan	0.9	1.0 (0.9 [1])	1.3	1.4 (1.3 [1])
FSB		1.6	1.8	2.1	2.3
FSC		2.4	2.6	3.1	3.3
FSD	7.5 kW	3.7	4.0	4.3	4.6
	11 kW	3.7	4.1	4.5	4.8
	15 kW	3.9	4.3	4.6	4.9
FSE	18.5 kW	6.2	6.8	6.9	7.5
	22 kW	6.4	7.0	7.1	7.7
Single phase AC 230 V inverters					
FSAA		0.6	0.7	1.0	1.1
FSAB		0.8	0.9	1.2	1.3
FSAC		1.2	1.4	1.3	1.5
FSB		1.6	1.8	2.0	2.1
FSC		2.5	2.8	3.0	3.2

[1] Weight of Flat Plate inverter (400 V 0.75 kW variant only).

Environmental conditions

Surrounding air temperature	- 10 °C to 40 °C: without derating 40 °C to 60 °C: with derating (UL/cUL-compliant: 40 °C to 50 °C, with derating)
Storage temperature	- 40 °C to + 70 °C
Protection class	IP 20
Maximum humidity level	95% (non-condensing)
Shock and vibration	Long-term storage in the transport packaging according to EN 60721-3-1 Class 1M2
	Transport in the transport packaging according to EN 60721-3-2 Class 2M3
	Vibration during operation according to EN 60721-3-3 Class 3M2

Installation altitude	Up to 4000 m above sea level: • For the installation altitude lower than or equal to 2000 m above sea level, it is permissible to connect a V20 inverter to any of the mains supply systems that are specified for it. • For the installation altitude higher than 2000 m and lower than or equal to 4000 m above sea level, you must connect a V20 inverter to any of the specified mains supply systems either via an isolating transformer or with a grounded neutral point. 1000 m to 4000 m: output current derating 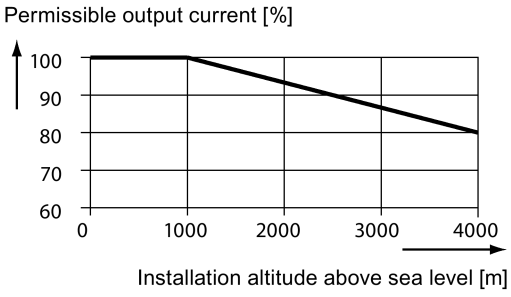 2000 m to 4000 m: input voltage derating 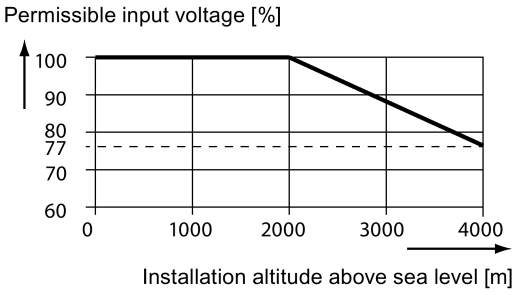
Environmental classes	Pollution degree: 2 Solid particles: class 3S2 Chemical gases: class 3C2 (SO_2, H_2S) Climate class: 3K3
Minimum mounting clearance	Top: 100 mm Bottom: 100 mm (85 mm for fan-cooled frame size A) Side: 0 mm

Standards

CE	**European Low Voltage Directive** The SINAMICS V20 product series and SINAMICS V20 Smart Access comply with the requirements of the Low Voltage Directive 2006/95/EC as amended by Directive 98/68/EEC. The units are certified for compliance with the following standards: EN 61800-5-1 — Semiconductor inverters – General requirements and line commutated inverters
	European EMC Directive When installed according to the recommendations described in this manual, the SINAMICS V20 and SINAMICS V20 Smart Access fulfill all requirements of the EMC Directive as defined by the EMC Product Standard for Power Drive Systems EN 61800-3.
	European RED Directive SINAMICS V20 Smart Access complies with the following requirements of Radio Equipment Directive (RED) 2014/53/EU: • Article 3(1)(a) Health and Safety (EN 60950-1, EN 62479) • Article 3(1)(b) EMC (EN 301 489-1, EN 301 489-17) • Article 3(2) Spectrum (EN 300 328)
	The CE Declaration of Conformity is held on file available to the competent authorities at the following address: Siemens AG Digital Factory Motion Control Frauenauracher Straße 80 DE-91056 Erlangen Germany
LISTED	The SINAMICS V20 product series has been examined and certified by Underwriters Laboratories (UL) to standards UL508C/UL61800-5-1 and CSA C22.2 NO-14-10.
	The SINAMICS V20 product series complies with the appropriate RCM standard.
EAC	The SINAMICS V20 product series complies with the appropriate EAC standard.

	The SINAMICS V20 product series complies with the requirements of the Korean Certification (KC mark). The SINAMICS V20 series (FSAA and FSAB excluded) has been defined as Class A equipment and is intended for industrial applications and has not been considered for home use. The SINAMICS V20 FSAA and FSAB products have been defined as Class B equipment and are intended for both industrial applications and home use. **EMC limit values in South Korea** The EMC limit values to be complied with for South Korea correspond to the limit values of the EMC product standard for variable-speed electric drives EN 61800-3, Category C2 or limit value class A, Group 1 according to EN55011. By applying suitable supplementary measures, the limit values according to Category C2 or according to limit value class A, Group 1are maintained. Further, additional measures may be required, for instance, using an additional radio interference suppression filter (EMC filter). The measures for EMC-compliant design of the system are described in detail in this manual. Please note that the final statement on compliance with the standard is given by the respective label attached to the individual unit.
ISO 9001	Siemens AG uses a quality management system that meets the requirements of ISO 9001.
	SINAMICS V20 Smart Access complies with the appropriate FCC standard. Changes or modifications made to this device that are not expressly approved by SIEMENS may void the FCC authorization to operate this device. This device complies with part 15 of the FCC Rules. Operation is subject to the following two conditions: (1) this device may not cause harmful interference, and (2) this device must accept any interference received, including interference that may cause undesired operation.
WPC	SINAMICS V20 Smart Access complies with the appropriate WPC standard.
SRRC	SINAMICS V20 Smart Access complies with the appropriate SRRC standard.

Certificates can be downloaded from the internet under the following link:

Website for certificates
(http://support.automation.siemens.com/WW/view/en/60668840/134200)

Options and spare parts

B

Note

Repair and replacement of equipment

Any defective parts or components must be replaced using parts contained in the relevant lists of spare parts or options.

Disconnect the power supply before opening the equipment for access.

B.1 Options

For more information about recommended cable cross-sections and screw tightening torques, see the table "Recommended cable cross-sections and screw tightening torques" in Section "Terminal description (Page 39)".

Note

In order to gain access to the expansion port to fit the Parameter Loader or Bop Interface Module, remove the detachable transparent cover gently using just finger pressure. It is recommended to keep the cover in a safe place and refit it when the expansion port is not in use.

B.1.1 Parameter Loader

Article number: 6SL3255-0VE00-0UA1

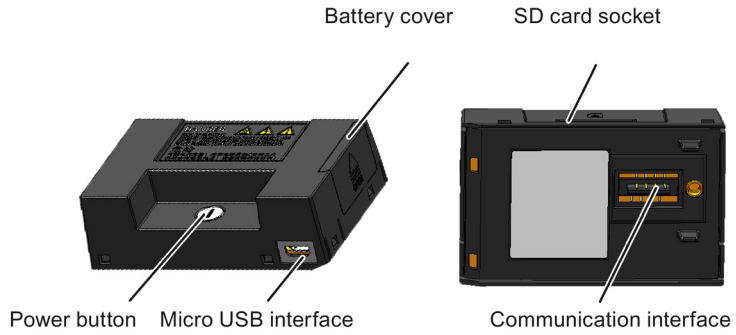

(Front view) (Back view)

Outline dimensions (mm)

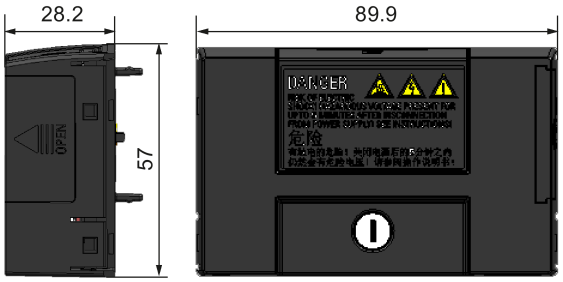

Functionality

The Parameter Loader provides the ability to upload/download parameter sets between the inverter and an SD card. It is only a commissioning tool and has to be removed during normal operation.

Note

To clone saved parameter settings from one inverter to another, a Parameter Loader is required. For more information about clone steps, see the data transferring steps described in this section.

During parameter cloning, make sure you either connect the PE terminal to earth or observe ESD protective measures.

SD card socket

The Parameter Loader contains an SD card socket which is connected directly to the expansion port on the inverter.

Battery power supply

In addition to the memory card interface, the Parameter Loader can hold two batteries (consumer grade, non-rechargeable carbon-zinc or alkaline AA size batteries only) which allow the inverter to be powered directly from this option module to perform data transfer when the mains power is unavailable.

WARNING

Risk of fire and explosion due to charging or short-circuiting of batteries

Battery charging or direct connection of plus (+) and minus (-) poles can cause leakage, heat generation, fire and even explosion.

- Do not charge the non-rechargeable batteries.
- Do not store and/or carry batteries with metallic products such as necklaces.

WARNING

Risk of fire and explosion due to improper disposal of batteries

Direct contact with metallic products and/or other batteries can cause battery damage, liquid leakage, heat generation, fire and even explosion. Disposal of batteries in fire is extremely dangerous with a risk of explosion and violent flaring.

Do not discard batteries into trash cans. Place them in the designated public recycling area for waste batteries.

CAUTION

Risk of environmental pollution

Casual disposal of batteries into water, trash cans, etc. can cause environmental pollution.

Collect and recycle the waste batteries in compliance with relevant environmental laws and regulations.

Micro USB interface

As an alternative way to power the inverter to perform data transfer when the mains power is unavailable, you can use a Micro USB cable to connect an external 5 V DC power supply to the Micro USB interface on the Parameter Loader. If the inverter can be supplied from the mains power, it is not necessary to power the Parameter Loader either from the batteries or via a Micro USB cable.

Fitting the Parameter Loader to the inverter

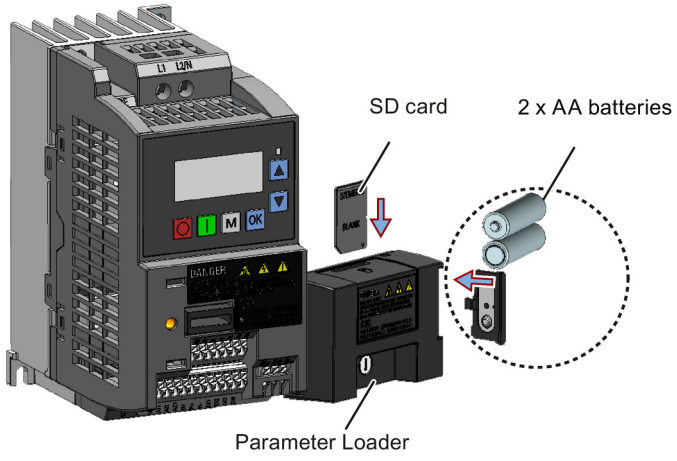

Note

When the inverters you desire to install include FSAA and/or FSAB inverters and you want to install FSAA and/or FSAB inverters side by side, to make sure that there is sufficient space to fit the parameter loader to the FSAA/FSAB inverter, install all available FSAA inverters to the farthest right, followed by all available FSAB inverters and then all other frame sizes. There are no additional mounting sequence requirements for inverters other than FSAA and FSAB.

Recommended SD card

Article number: 6SL3054-4AG00-2AA0

Using memory cards from other manufacturers

SD card requirement:

- Supported file format: FAT16 and FAT 32
- Maximum card capacity: 32 GB
- Minimum card space for parameter transfer: 8 KB

Note

You use memory cards from other manufacturers at your own risk. Depending on the card manufacturer, not all functions are supported (for example, download).

Methods to power on the inverter

Use one of the following methods to power on the inverter for downloading/uploading parameters:

- Power on from the mains supply.
- Power on from the built-in battery power supply. Press the power button on the Parameter Loader and the inverter is powered on.
- Power on from an external DC 5 V power supply that is connected to the Parameter Loader. Press the power button on the Parameter Loader and the inverter is powered on.

Transferring data from inverter to SD card

1. Fit the option module to the inverter.
2. Power on the inverter.
3. Insert the card into the option module.
4. Set P0003 (user access level) = 3.
5. Set P0010 (commissioning parameter) = 30.

6. Set P0804 (select clone file). This step is necessary only when the card contains the data files that you do not desire to be overwritten.

   P0804 = 0 (default): file name is clone00.bin

   P0804 = 1: file name is clone01.bin

   ...

   P0804 = 99: file name is clone99.bin

7. Set P0802 (transfer data from inverter to card) = 2.

The inverter displays "8 8 8 8 8" during transfer and the LED is lit up orange and flashes at 1 Hz. After a successful transfer, both P0010 and P0802 are automatically reset to 0. If any faults occur during the transfer, see Chapter "Faults and alarms (Page 323)" for possible reasons and remedies.

Transferring data from SD card to inverter

There are two ways to perform a data transfer.

Method 1:

(Precondition: Inverter is to be powered up after inserting the card)

1. Fit the option module to the inverter.
2. Insert the card into the option module. Make sure the card contains the file "clone00.bin".
3. Power on the inverter.

   Data transfer starts automatically. Then the fault code F395 displays which means "Cloning has occurred. Do you want to keep the clone edits?".
4. To save the clone edits, press OK and the fault code is cleared. When the clone file is written to EEPROM, the LED is lit up orange and flashes at 1Hz.

   If you do not wish to keep the clone edits, remove the card or the option module and restart the inverter. The inverter will power up with the fault code F395 (r0949 = 10) indicating that the previous cloning was aborted. To clear the fault code, press OK.

Method 2:

(Precondition: Inverter is powered up before inserting the card)

1. Fit the option module to the powered inverter.
2. Insert the card into the option module.
3. Set P0003 (user access level) = 3.
4. Set P0010 (commissioning parameter) = 30.
5. Set P0804 (select clone file). This step is necessary only when the card does not contain the file "clone00.bin". The inverter copies by default the file "clone00.bin" from the card.
6. Set P0803 (transfer data from card to inverter) = 2 or 3.

The inverter displays "8 8 8 8 8" during transfer and the LED is lit up orange and flashes at 1 Hz. After a successful transfer, both P0010 and P0803 are automatically reset to 0.

Note that fault code F395 only occurs with power-up cloning.

B.1.2 External BOP and BOP Interface Module

External BOP

Article number: 6SL3255-0VA00-4BA1

The external BOP is used for remote control of the inverter operation. When mounted on a suitable cabinet door, the external BOP can achieve a UL/cUL Type 1 enclosure rating. The permissible operating temperature range for the external BOP is from -10 °C to 50 °C.

Components

- External BOP unit
- 4 x M3 screws

Rating plate

The rating plate for the external BOP is located on the back side of the BOP.

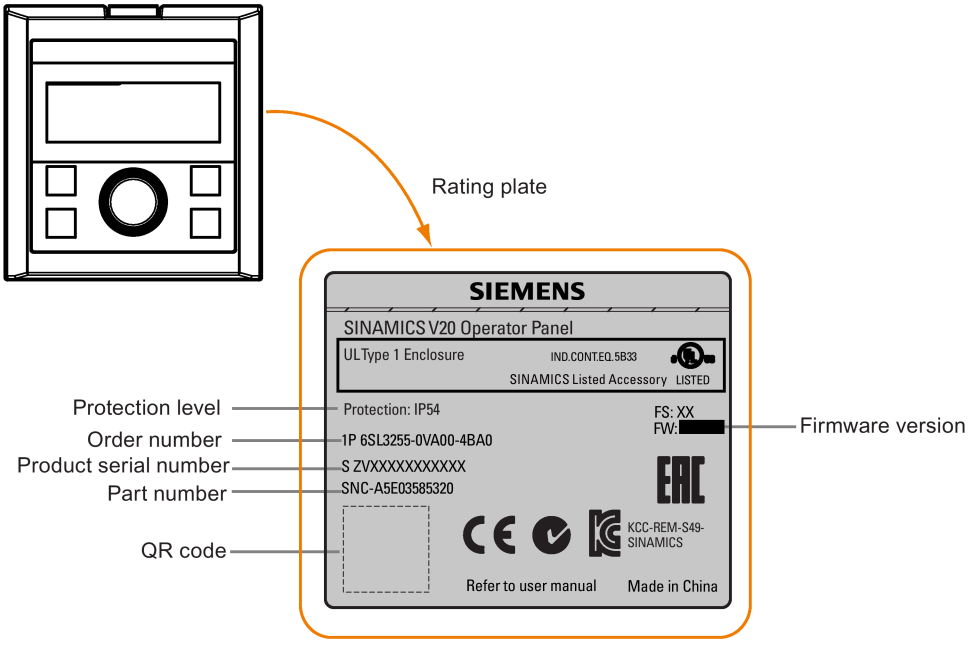

Panel layout

The SINAMICS V20 supports an external BOP for remote control of inverter operation. The external BOP connects to the inverter through an optional BOP Interface Module.

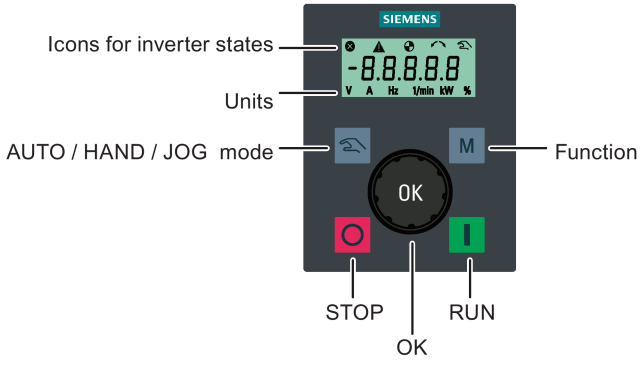

Button functions

Button	Description
	**Stops the inverter** Button functions the same as the button on the built-in BOP.
	**Starts the inverter** Button functions the same as the button on the built-in BOP.
	**Multi-function button** Button functions the same as the button on the built-in BOP.
	**Pressing the button:** Button functions the same as the button on the built-in BOP. **Turning clockwise:** Button functions the same as the button on the built-in BOP. Fast turning functions the same as long press of the button on the built-in BOP. **Turning counter-clockwise:** Button functions the same as the button on the built-in BOP. Fast turning functions the same as long press of the button on the built-in BOP.
	Button functions the same as the + buttons on the built-in BOP.

Inverter status icons

    	These icons have the same meaning as the corresponding icons on the built-in BOP.
	Commissioning icon. The inverter is in commissioning mode (P0010 = 1).

Screen display

The display of the external BOP is identical to the built-in BOP, except that the external BOP has a commissioning icon which is used to indicate that the inverter is in commissioning mode.

On inverter power-up, the inverter-connected external BOP first displays "BOP.20" (BOP for the SINAMICS V20) and then the firmware version of the BOP. After that it detects and displays the baudrate and the USS communication address of the inverter automatically.

See the following table for settable baudrate and address values. To change the baudrate, set P2010[0]. To change the USS communication address, set P2011[0].

Baudrate (bps)	Communication address	Display example
9600	0 ... 31	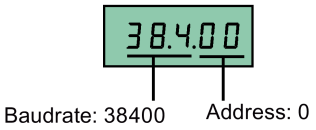
19200	0 ... 31	
38400	0 ... 31	
57600	0 ... 31	
76800	0 ... 31	
93750	0 ... 31	
115200	0 ... 31	

In case of any communication errors, the screen displays "noCon" which means that no communication connection has been detected. The inverter then automatically restarts baudrate and address detection. In this case, check that the cable is correctly connected.

Mounting dimensions of the external BOP

The outline dimensions, drill pattern and cut-out dimensions of the external BOP are shown below:

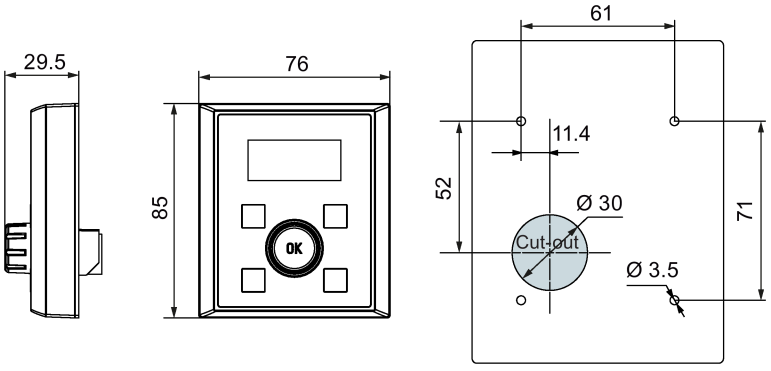

Unit: mm

Fixings:
4 x M3 screws (length: 8 mm to 12 mm)
Tightening torque: 0.8 Nm ± 10%

BOP Interface Module

Article number: 6SL3255-0VA00-2AA1

Functionality

This module can be used as an interface module for the external BOP, thus realizing the remote control over the inverter by the external BOP.

The module contains a communication interface for connecting the external BOP to the inverter and a plug connector for connection to the expansion port on the inverter. The

permissible operating temperature range for the BOP Interface Module is from -10 °C to 50 °C.

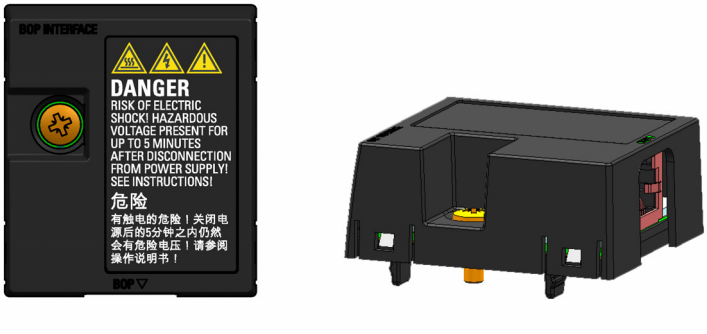

Outline dimensions (mm)

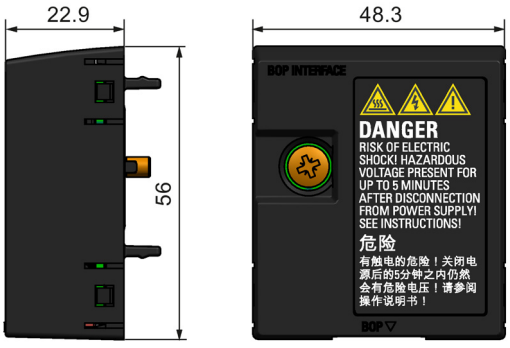

Mounting (SINAMICS V20 + BOP Interface Module + external BOP)

Note

Connecting the BOP Interface Module to the external BOP is required only when you desire to control the inverter operation remotely with the external BOP. The BOP Interface Module needs to be screwed to the inverter with a tightening torque of 1.5 Nm (tolerance: ± 10%).

Note

Make sure that you connect the cable shield to the shield connection kit. For more information about the shielding method, see Section "EMC-compliant installation (Page 45)".

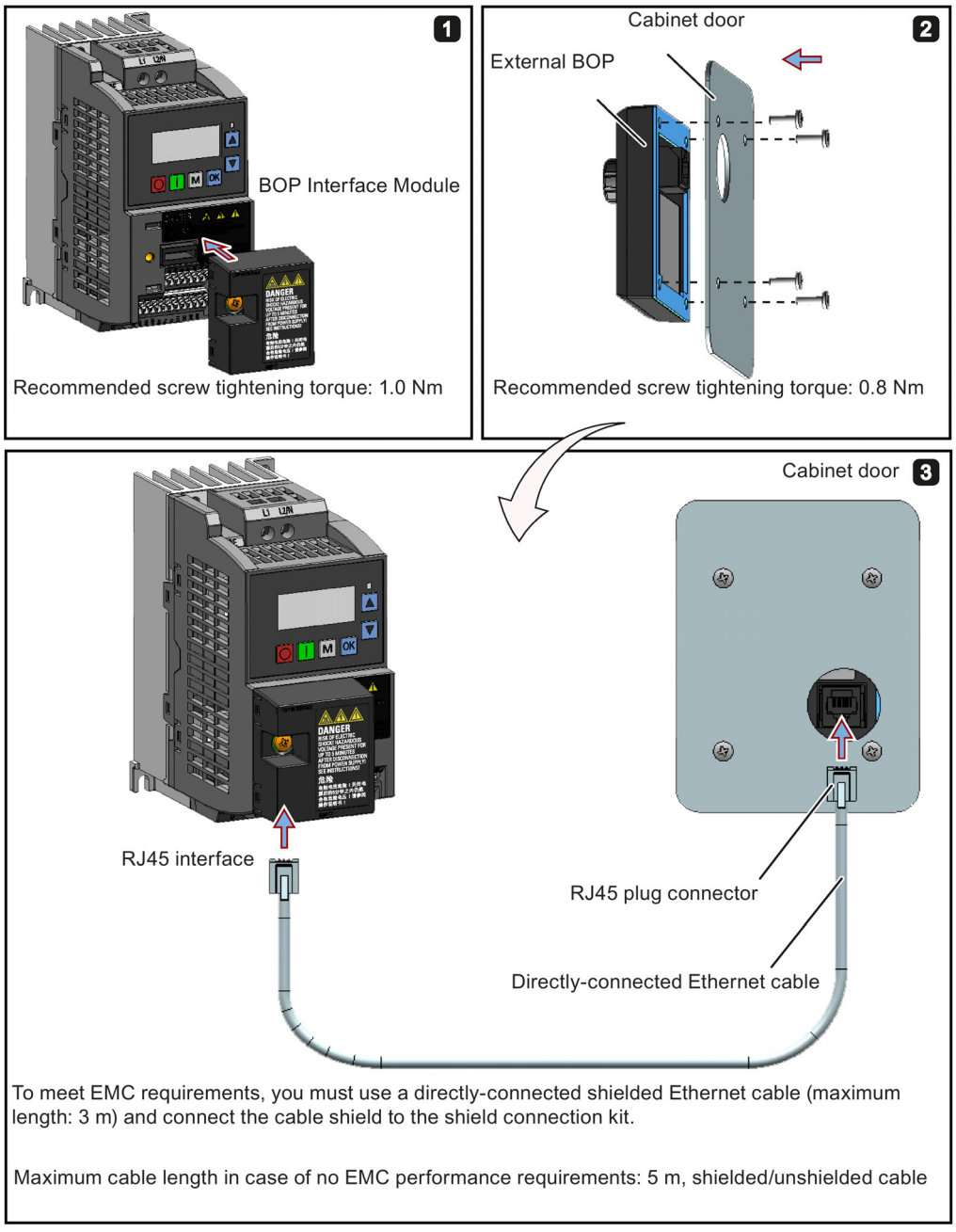
1
BOP Interface Module
Recommended screw tightening torque: 1.0 Nm
Cabinet door
2
External BOP
Recommended screw tightening torque: 0.8 Nm
Cabinet door
3
RJ45 interface
RJ45 plug connector
Directly-connected Ethernet cable
To meet EMC requirements, you must use a directly-connected shielded Ethernet cable (maximum length: 3 m) and connect the cable shield to the shield connection kit.
Maximum cable length in case of no EMC performance requirements: 5 m, shielded/unshielded cable

B.1.3 Dynamic braking module

Article number: 6SL3201-2AD20-8VA0

Note

This module is applicable for frame sizes AA to C only.

Functionality

The dynamic braking module is typically used in applications in which dynamic motor behavior is required at different speed or continuous direction changes, for example, for conveyor drives or hoisting gear.

Dynamic braking converts the regenerative energy, which is released when the motor brakes, into heat. Dynamic braking activity is limited by the duty cycle selected with the control knob.

Mounting orientation

The dynamic braking module must be installed in the orientation as shown in the following diagram. That is, the open slots must always point directly upwards to ensure adequate cooling.

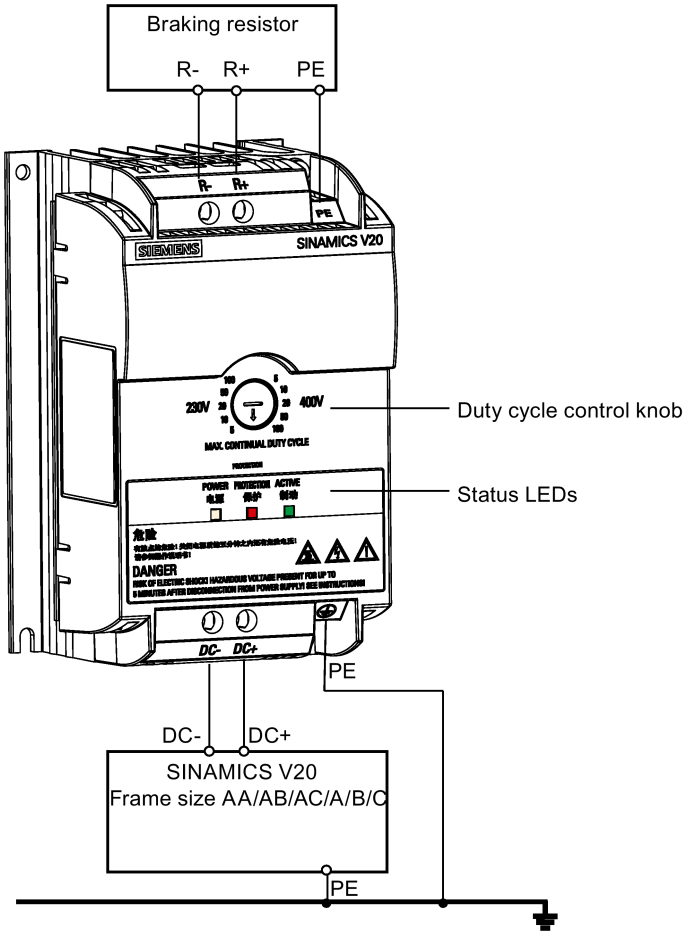

Drill pattern (mm)

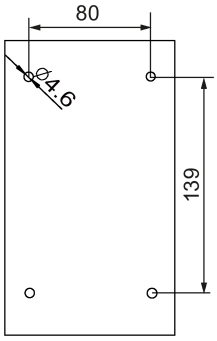

Recommended cable cross-sections

Inverter frame size	Rated output power	Cable cross-sections for DC terminals (DC-, DC+)
230 V		
FSAA/FSAB	0.12 … 0.75 kW	1.0 mm^2
FSAC/FSB	1.1 … 1.5 kW	2.5 mm^2
FSC	2.2 … 3.0 kW	4.0 mm^2
400 V		
FSA	0.37 … 0.75 kW	1.0 mm^2
	1.1 … 2.2 kW	1.5 mm^2
FSB	3.0 … 4.0 kW	2.5 mm^2
FSC	5.5 kW	4.0 mm^2

Note: Do not use the cables with cross-sections less than 0.3 mm^2 (for inverter frame size AA/AB/A)/0.5 mm^2 (for inverter frame sizes AC/B/C). Use a screw tightening torque of 1.0 Nm/8.9 lbf.in (tolerance: ±10%).

NOTICE

Destruction of device

It is extremely important to ensure that the polarity of the DC link connections between the inverter and the dynamic braking module is correct. If the polarity of the DC terminals' connections is reversed, it could result in the destruction of the inverter and the module.

Status LEDs

LED	Color	Description
POWER	Yellow	Module is powered up.
STATUS	Red	Module is in protection mode.
ACTIVE	Green	Module is releasing regenerative energy produced when the motor brakes into heat.

Duty cycle selection

NOTICE
Damage to the braking resistor Incorrect setting for the duty cycle/voltage could damage the attached braking resistor. Use the control knob to select the rated duty cycle of the braking resistor.

Value labels on the module have the following meanings:

Label	Meaning
230 V	Duty cycle values labeled are for 230 V inverters
400 V	Duty cycle values labeled are for 400 V inverters
5	5% duty cycle
10	10% duty cycle
20	20% duty cycle
50	50% duty cycle
100	100% duty cycle

Technical specifications

	One phase AC 230 V inverters	Three phase AC 400 V inverters
Peak power rating	3.0 kW	5.5 kW
RMS current at peak power	8.0 A	7.0 A
Maximum continuous power rating	3.0 kW	4.0 kW
Maximum continuous current rating	8.0 A	5.2 A
Maximum continuous power rating (side-by-side mounted)	1.5 kW	2.75 kW
Maximum continuous current rating (side-by-side mounted)	4.0 A	3.5 A
Surrounding air temperature	- 10 °C to 50 °C: without derating	- 10 °C to 40 °C: without derating 40 °C to 50 °C: with derating
Maximum continuous current rating at 50 ℃ surrounding air temperature	8.0 A	1.5 A
Outline dimensions (L x W x D)	150 x 90 x 88 (mm)	
Mounting	Cabinet panel mounting (4 x M4 screws)	
Maximum duty cycle	100%	
Protection functions	Short-circuit protection, over-temperature protection	
Maximum cable length	• Braking module to inverter: 1 m • Braking module to braking resistor: 10 m	
UL file number	E121068	

B.1.4 Braking resistor

WARNING

Operating conditions

Make sure that the resistor to be fitted to the SINAMICS V20 is adequately rated to handle the required level of power dissipation.

All applicable installation, usage and safety regulations regarding high voltage installations must be complied with.

If the inverter is already in use, disconnect the prime power and wait at least five minutes for the capacitors to discharge before commencing installation.

This equipment must be earthed.



WARNING

Hot surface

Braking resistors get hot during operation. Do not touch the braking resistor during operation.

Using an incorrect braking resistor can cause severe damage to the associated inverter and may result in fire.

A thermal cut-out circuit (see diagram below) must be incorporated to protect the equipment from overheating.

NOTICE

Device damage caused by improper minimum resistance values

A braking resistor with a resistance lower than the following minimum resistance values can damage the attached inverter or braking module:

- 400 V inverter frame sizes A to C: 56 Ω
- 400 V inverter frame size D/E: 27 Ω
- 230 V inverter frame sizes AA to C: 39 Ω

Functionality

An external braking resistor can be used to "dump" the regenerative energy produced by the motor, thus giving greatly improved braking and deceleration capabilities.

A braking resistor which is required for dynamic braking can be used with all frame sizes of inverters. Frame size D is designed with an internal braking chopper, allowing you to connect the braking resistor directly to the inverter; however, for frame sizes A to C, an additional dynamic braking module is required for connecting the braking resistor to the inverter.

Ordering data

Frame size	Inverter power rating	Resistor article number	Continuous power	Peak power (5% duty cycle)	Resistance ± 10%	DC voltage rating
Three phase AC 400 V inverters						
FSA	0.37 kW	6SL3201-0BE14-3AA0	75 W	1.5 kW	370 Ω	840 V +10%
	0.55 kW					
	0.75 kW					
	1.1 kW					
	1.5 kW					
	2.2 kW	6SL3201-0BE21-0AA0	200 W	4.0 kW	140 Ω	840 V +10%
FSB	3 kW					
	4 kW					
FSC	5.5 kW	6SL3201-0BE21-8AA0	375 W	7.5 kW	75 Ω	840 V +10%
FSD	7.5 kW					
	11 kW	6SL3201-0BE23-8AA0	925 W	18.5 kW	30 Ω	840 V +10%
	15 kW					
FSE	18.5 kW	6SE6400-4BD21-2DA0	1200 W	24 kW	27 Ω	900 V
	22 kW					
Single phase AC 230 V inverters						
FSAA/FSAB	0.12 kW	6SE6400-4BC05-0AA0	50 W	1.0 kW	180 Ω	450 V
	0.25 kW					
	0.37 kW					
	0.55 kW					
	0.75 kW					
FSAC/FSB	1.1 kW	6SE6400-4BC11-2BA0	120 W	2.4 kW	68 Ω	450 V
	1.5 kW					
FSC	2.2 kW					
	3 kW	6SE6400-4BC12-5CA0	250 W	4.5 kW	39 Ω	450 V

* All the above resistors are rated for a maximum duty cycle of 5%.

Technical data

Surrounding operating temperature:	-10° C to +50° C
Storage/transport temperature:	-40° C to +70° C
Degree of protection:	IP20
Humidity:	0% to 95% (non-condensing)
cURus file number:	E221095 (Gino) E219022 (Block)

Installation

For three phase AC 400 V inverters FSA to FSD

The resistors can be installed in a vertical or horizontal position and secured to a heat resistant surface. The required minimum clearance distances are shown below:

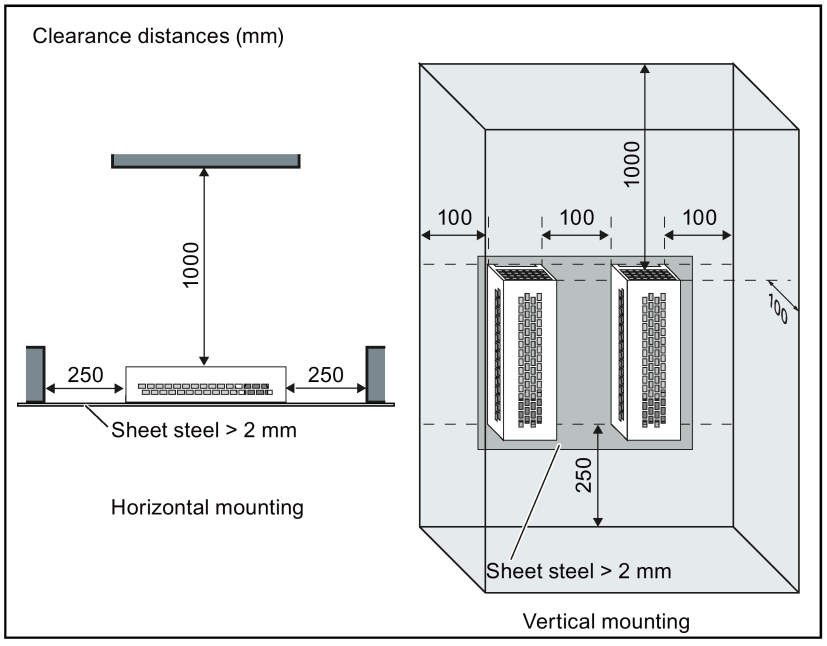

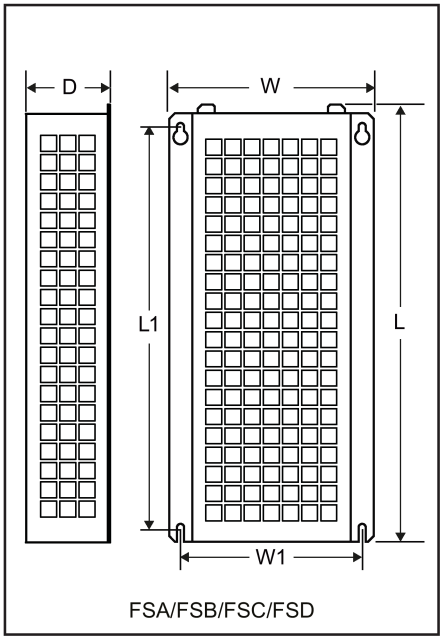

For single phase AC 230 V inverters and three phase AC 400 V inverter FSE

The resistors must be installed in a vertical position and secured to a heat resistant surface. At least 100 mm must be left above, below and to the side of the resistor to allow an unimpeded airflow.

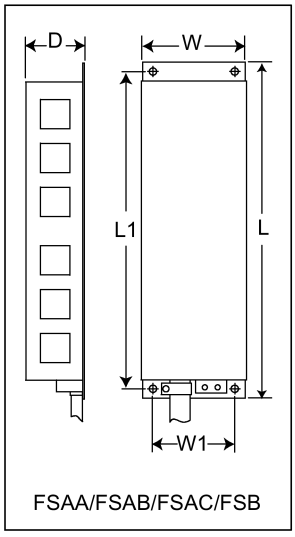

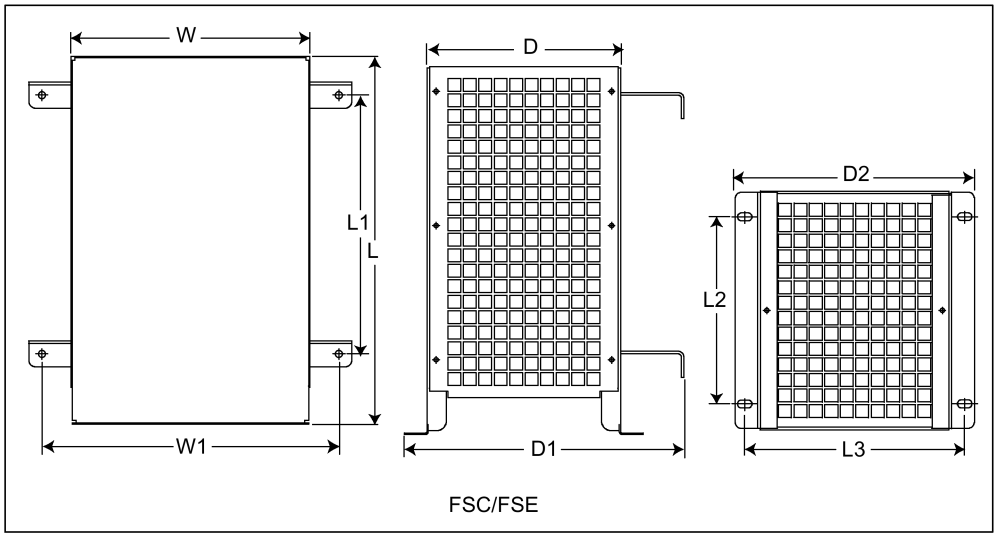

Mounting dimensions

Resistor article number	Dimensions (mm)									Weight (kg)
	L	L1	L2	L3	D	D1	D2	W	W1	
Three phase AC 400 V inverters										
6SL3201-0BE14-3AA0	295	266	-	-	100	-	-	105	72	1.48
6SL3201-0BE21-0AA0	345	316	-	-	100	-	-	105	72	1.80
6SL3201-0BE21-8AA0	345	316	-	-	100	-	-	175	142	2.73
6SL3201-0BE23-8AA0	490	460	-	-	140	-	-	250	217	6.20
6SE6400-4BD21-2DA0	515	350	205	195	175	242	210	270	315	7.4
Single phase AC 230 V inverters 6SE6400-...										
4BC05-0AA0	230	217	-	-	43.5	-	-	72	56	1.0
4BC11-2BA0	239	226	-	-	43.5	-	-	149	133	1.6
4BC12-5CA0	285	200	145	170	150	217	185	185	230	3.8

Connection

The mains supply to the inverter can be provided through a contactor which disconnects the supply if the resistor overheats. Protection is provided by a thermal cut-out switch (supplied with each resistor). The cut-out switch can be wired in-series with the coil supply for the main contactor (see diagram below). The thermal switch contacts close again when the resistor temperature falls; after which the inverter starts automatically (P1210 = 1). A fault message is generated with this parameter setting.

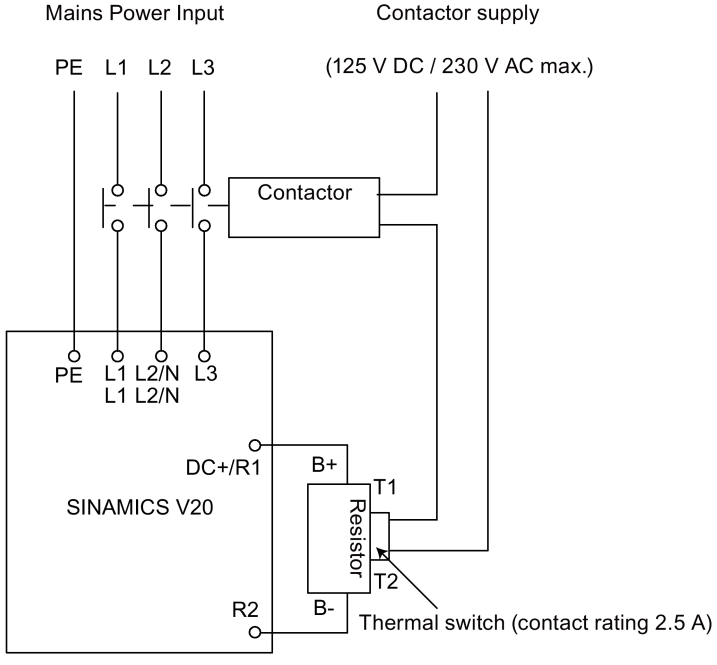

Commissioning

The braking resistors are designed to operate on a 5% duty cycle. For inverter frame size D, set P1237 = 1 to enable the braking resistor function. For other frame sizes, use the dynamic braking module to select the 5% duty cycle.

Note

Additional PE terminal

Some resistors have an additional PE connection available on the resistor housing.

B.1.5 Line reactor



WARNING

Heat during operation

The line reactors get hot during operation. Do not touch. Provide adequate clearance and ventilation.

When operating the larger line reactors in an environment with a surrounding air temperature in excess of 40° C, the wiring of the terminal connections must be accomplished using 75° C copper wire only.

WARNING

Risk of equipment damage and electric shocks

Some of the line reactors in the table below have pin crimps for the connection to the inverter's mains terminals.

Use of these pin crimps can cause damage to the equipment and even electric shocks.

For safety reasons, replace the pin crimps using UL/cUL-certified fork crimps or stranded cables.

CAUTION

Protection rating

The line reactors have a protection rating of IP20 in accordance with EN 60529 and are designed to be mounted inside a cabinet.

Functionality

The line reactors are used to smooth voltage peaks or to bridge commutating dips. They also can reduce the effects of harmonics on the inverter and the line supply.

The larger line reactors for the 230 V variants of inverters have side mounting brackets to allow side-by-side mounting (see diagram below).

Ordering data

Frame size	Inverter power rating	Line reactor		
		Article number	Voltage	Current
Three phase AC 400 V inverters				
FSA	0.37 kW	6SL3203-0CE13-2AA0	380 V to 480 V	4.0 A
	0.55 kW			
	0.75 kW			
	1.1 kW			
	1.5 kW	6SL3203-0CE21-0AA0	380 V to 480 V	11.3 A
	2.2 kW			
FSB	3 kW			
	4 kW			
FSC	5.5 kW	6SL3203-0CE21-8AA0	380 V to 480 V	22.3 A
FSD	7.5 kW			
	11 kW	6SL3203-0CE23-8AA0	380 V to 480 V	47.0 A
	15 kW			
FSE	18.5 kW	6SL3203-0CJ24-5AA0	200 V to 480 V	53.6 A
	22 kW	6SL3203-0CD25-3AA0	380 V to 600 V	86.9 A
Single phase AC 230 V inverters				
FSAA/FSAB	0.12 kW	6SE6400-3CC00-4AB3	200 V to 240 V	3.4 A
	0.25 kW			
	0.37 kW	6SE6400-3CC01-0AB3	200 V to 240 V	8.1 A
	0.55 kW			
	0.75 kW			
FSAC/FSB	1.1 kW	6SE6400-3CC02-6BB3	200 V to 240 V	22.8 A
	1.5 kW			
FSC	2.2 kW			
	3 kW	6SE6400-3CC03-5CB3	200 V to 240 V	29.5 A

Connecting the line reactor to the inverter

The following illustration takes the line reactors for the 230 V variants of inverters as an example.

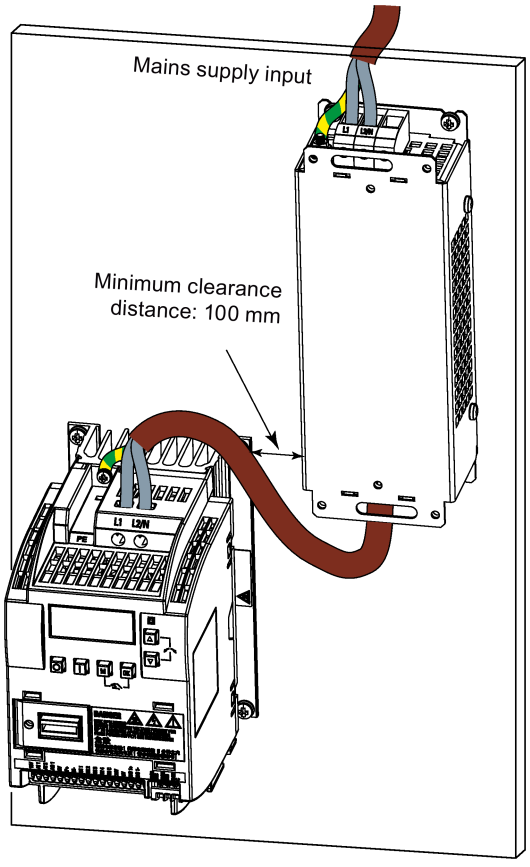

Mounting dimensions

For three phase AC 400 V inverters FSA to FSD

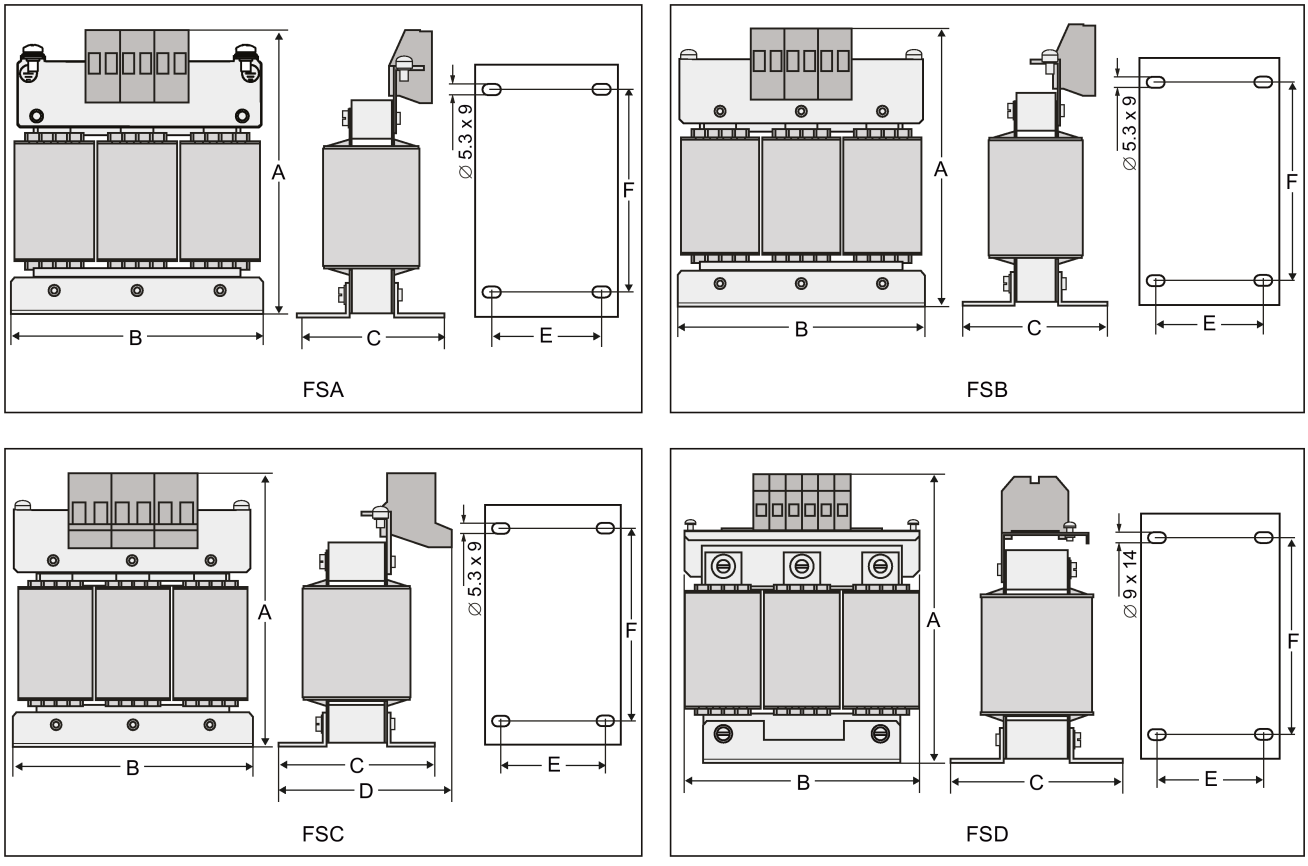

Article number 6SL3203-...	Dimensions (mm)						Weight (kg)	Fixing screw		Cable cross section (mm^2)
	A	B	C	D	E	F		Size	Tightening torque (Nm)	
0CE13-2AA0	120	125	71	-	55	100	1.10	M4 (4)	3.0	2.5
0CE21-0AA0	140	125	71	-	55	100	2.10	M4 (4)	3.0	2.5
0CE21-8AA0	145	125	81	91	65	100	2.95	M5 (4)	5.0	6.0
0CE23-8AA0	220	190	91	-	68	170	7.80	M5 (4)	5.0	16.0

For three phase AC 400 V inverter FSE

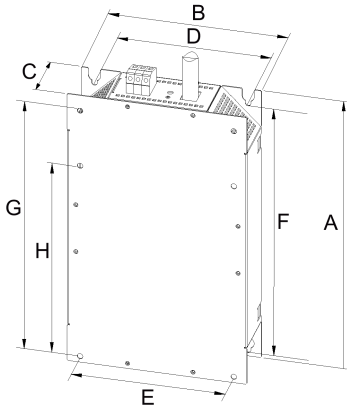

Article number 6SL3203-...	Electrical characteristics		Overall dimensions (mm)			Fixing dimensions (mm)					Fixing screw	Weight (kg)
	Voltage (V)	Current (A)	A	B	C	D	E	F	G	H		
0CJ24-5AA0	380 to 480	47	455	275	84	235	235	421	419	325	4 x M8 (13 Nm)	13
0CD25-3AA0		63										

For single phase AC 230 V inverters

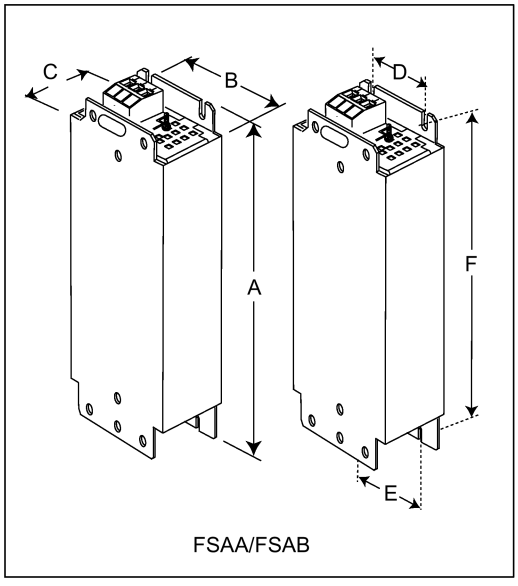

FSAA/FSAB

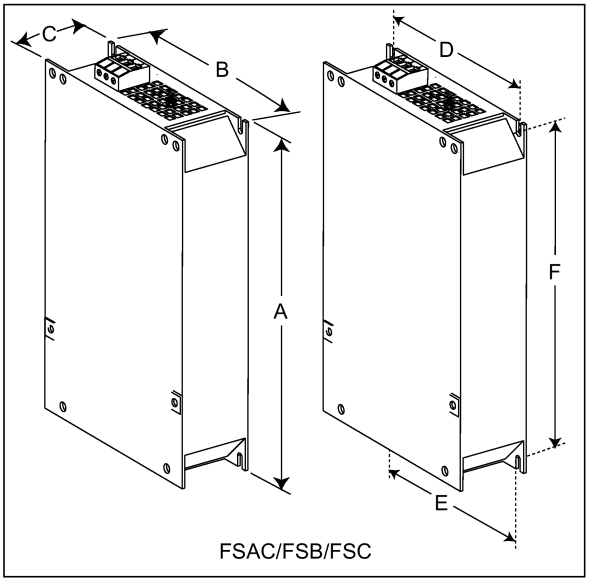

FSAC/FSB/FSC

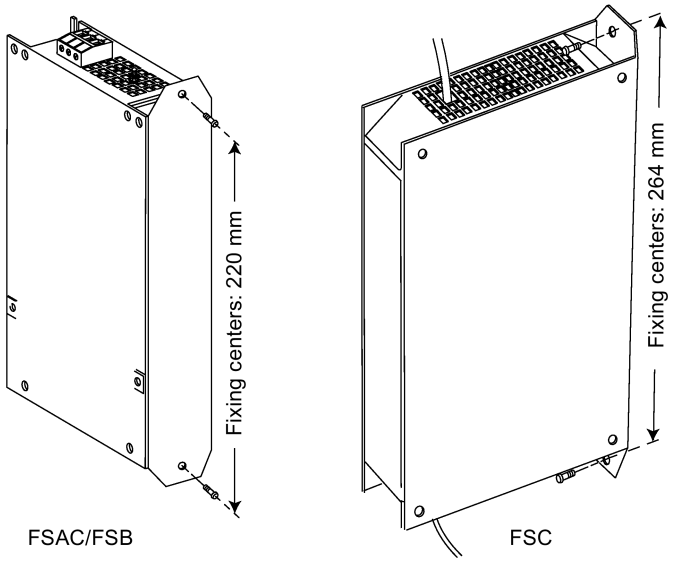

Article number 6SE6400-...	Dimensions (mm)						Weight (kg)	Fixing screw		Cable cross section (mm^2)	
	A	B	C	D	E	F		Size	Tightening torque (Nm)	Min.	Max.
3CC00-4AB3	200	75.5	50	56	56	187	0.5	M4 (2)	1.1	1.0	2.5
3CC01-0AB3	200	75.5	50	56	56	187	0.5	M4 (2)			
3CC02-6BB3	213 (233*)	150	50	138	120	200	1.2	M4 (4)	1.5	1.5	6.0
3CC03-5CB3	245 (280*)	185	50 (50/80*)	174	156	230	1.0	M5 (4)	2.25	2.5	10

* Height with side-mounting bracket

B.1.6 Output reactor

CAUTION

Pulse frequency restriction

The output reactor works only at 4kHz switching frequency. Before the output reactor is used, parameters P1800 and P0290 must be modified as follows: P1800 = 4 and P0290 = 0 or 1.

Functionality

The output reactors reduce the voltage stress on the motor windings. At the same time, the capacitive charging/discharging currents, which place an additional load on the inverter output when long motor cables are used, are reduced.

For safety reasons, it is recommended to use a shielded cable (maximum length: 200 m) to connect the output reactor.

Ordering data

Frame size	Inverter power rating	Output reactor		
		Article number	Voltage	Current
Three phase AC 400 V inverters				
FSA	0.37 kW	6SL3202-0AE16-1CA0	380 V to 480 V	6.1 A
	0.55 kW			
	0.75 kW			
	1.1 kW			
	1.5 kW			
	2.2 kW	6SL3202-0AE18-8CA0	380 V to 480 V	9.0 A
FSB	3 kW			
	4 kW	6SL3202-0AE21-8CA0	380 V to 480 V	18.5 A
FSC	5.5 kW			
FSD	7.5 kW	6SL3202-0AE23-8CA0	380 V to 480 V	39.0 A
	11 kW			
	15 kW			
FSE	18.5 kW	6SE6400-3TC03-8DD0	200 V to 480 V	45.0 A
	22 kW	6SE6400-3TC05-4DD0	200 V to 480 V	68.0 A
Single phase AC 230 V inverters				
FSAA/FSAB	0.12 kW	6SE6400-3TC00-4AD3	200 V to 240 V	4.0 A
	0.25 kW			
	0.37 kW			
	0.55 kW			
	0.75 kW			
FSAC/FSB	1.1 kW	6SE6400-3TC01-0BD3	200 V to 480 V	10.4 A
	1.5 kW			
FSC	2.2 kW			
	3 kW	6SE6400-3TC03-2CD3	200 V to 480 V	26.0 A

Connecting the output reactor to the inverter

The following illustration takes the output reactors for the 230 V variants of inverters as an example.

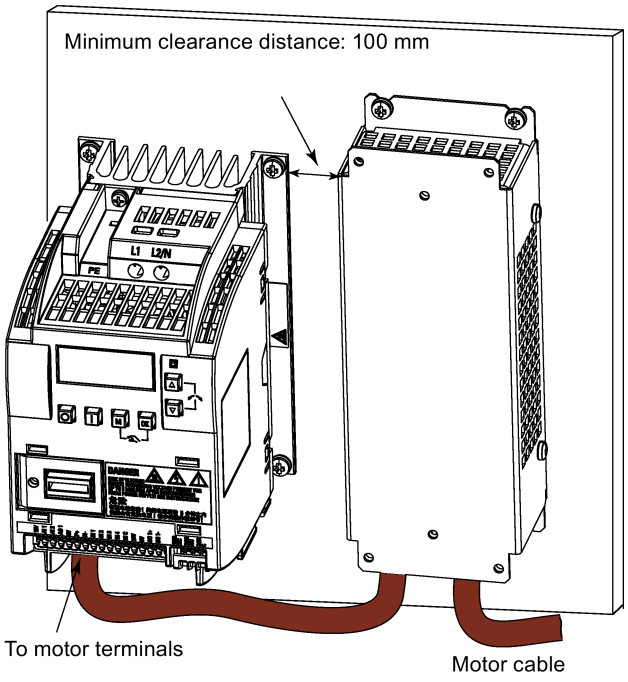

Mounting dimensions

For three phase AC 400 V inverters FSA to FSD

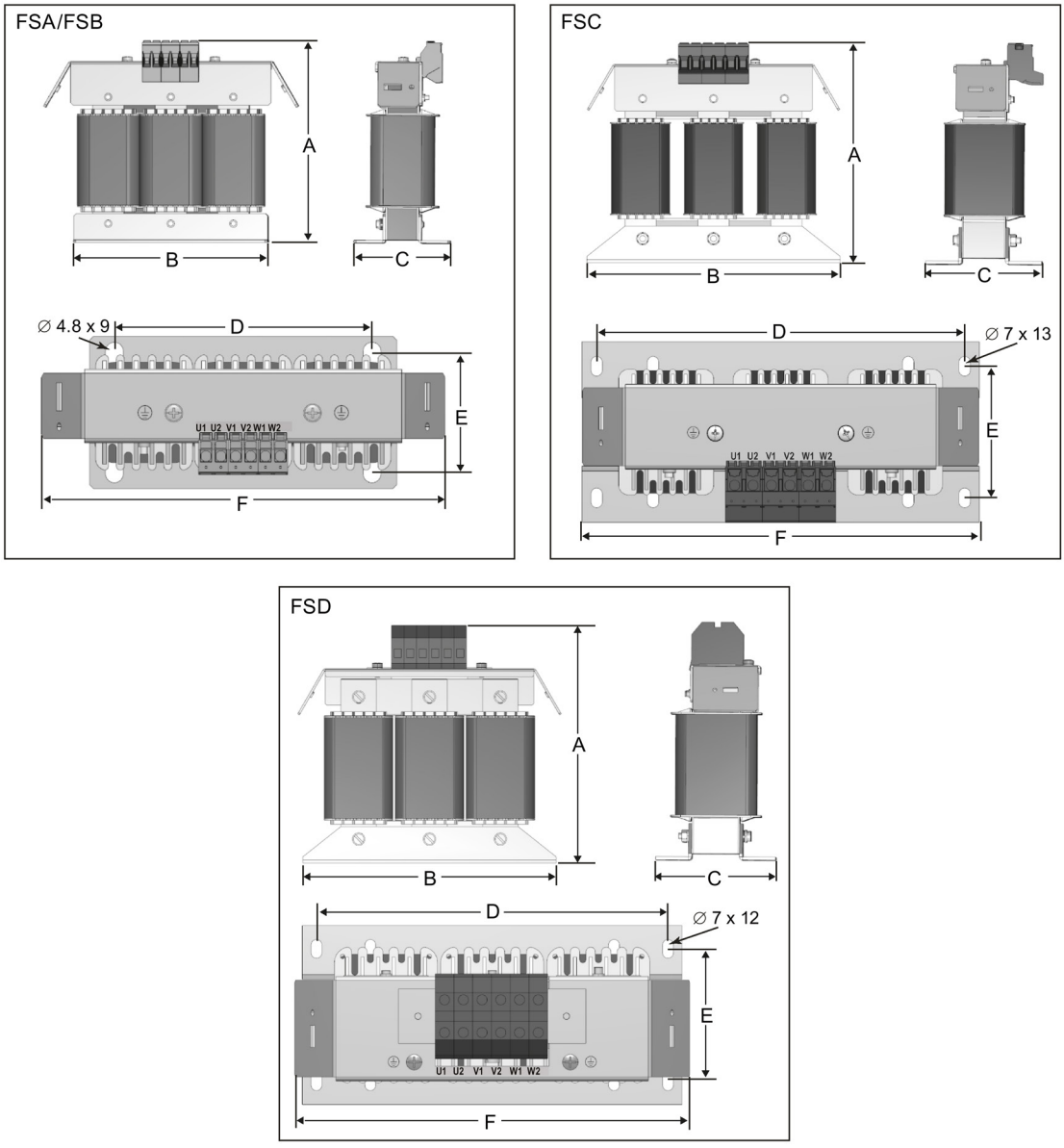

Article number	Dimensions (mm)						Weight (kg)	Fixing screw		Cable cross section (mm²)
6SL3202-...	A	B	C	D	E	F		Size	Tightening torque (Nm)	
0AE16-1CA0	175	178	72.5	166	56.5	207	3.4	M4 (4)	3.0	4.0
0AE18-8CA0	180	178	72.5	166	56.5	207	3.9	M4 (4)	3.0	4.0
0AE21-8CA0	215	243	100	225	80.5	247	10.1	M5 (4)	5.0	10.0
0AE23-8CA0	235	243	114.7	225	84.7	257	11.2	M5 (4)	5.0	16.0

For three phase AC 400 V inverter FSE

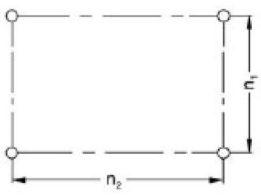

Fixing centers

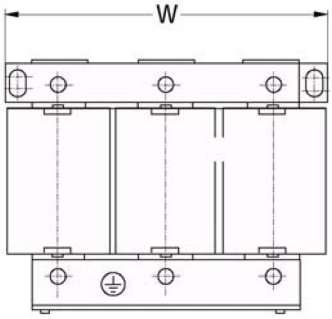

Article number 6SE6400-	Electrical charateristics			Connecting bolt	Overall dimensions (mm)			Fixing dimensions (mm)		Fixing screw	Weight (kg)
	Voltage (V)	Current (A)	Torque (Nm)		H	W	D	n1	n2		
3TC05-4DD0	200 to 480	54	3.5 to 4.0	M5	210	225	150	70	176	M6	10.7
3TC03-8DD0	380 to 480	38	3.5 to 4.0	M5	210	225	179	94	176	M6	16.1

For single phase AC 230 V inverters

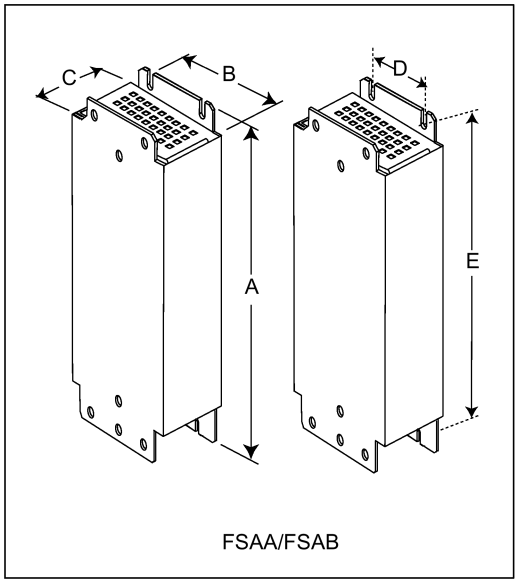

FSAA/FSAB

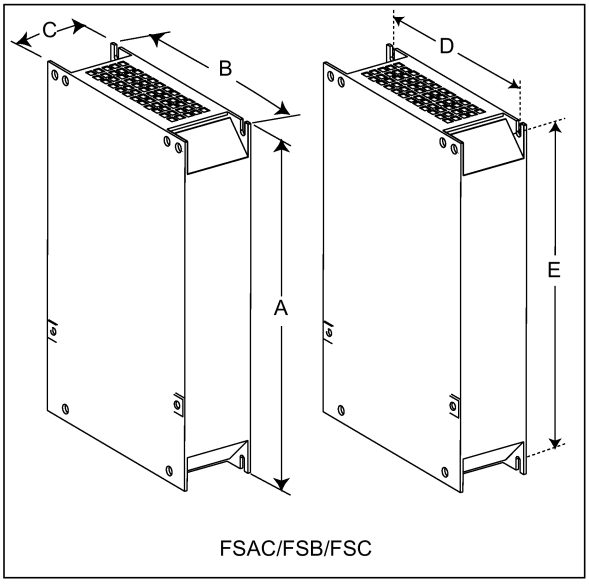

FSAC/FSB/FSC

Article number 6SE6400-...	Dimensions (mm)					Weight (kg)	Fixing screw		Cable cross section (mm^2)	
	A	B	C	D	E		Size	Tightening torque (Nm)	Min.	Max.
3TC00-4AD3	200	75.5	50	56	187	1.3	M4 (4)	1.1	1.0	2.5
3TC01-0BD3	213	150	80	120	200	4.1	M4 (4)	1.5	1.5	6.0
3TC03-2CD3	245	185	80	156	232	6.6	M4 (4)	2.25	2.5	10

B.1.7 External line filter Class B

WARNING

Risk of equipment damage and electric shocks

Some of the line filters in the table below have pin crimps for the connection to the inverter's PE and mains terminals.

Use of these pin crimps can cause damage to the equipment and even electric shocks.

For safety reasons, replace the pin crimps using appropriately sized UL/cUL-certified fork or ring crimps for PE terminal connection, and using UL/cUL-certified fork crimps or stranded cables for mains terminal connection.

Note

The line filter with an article number of 6SE6400-2FL02-6BB0 in the following table has two DC terminals (DC+, DC-) that are not used and should not be connected. The cables of these terminals need to be cut back and suitably insulated (for example, with heat shrink shroud).

Functionality

In order to achieve EN61800-3 Category C1/C2 (level equivalent to EN55011, Class B/A1) Radiated and Conducted Emission, the external line filters shown below are required for the SINAMICS V20 inverters (400 V filtered and unfiltered variants, as well as 230 V unfiltered variants). In this case, only a screened output cable can be used, and the maximum cable length is 25 m for the 400 V variants or 5 m for the 230 V variants.

Ordering data

Frame size	Inverter power rating	Line filter class B		
		Article number	Voltage	Current
Three phase AC 400 V inverters				
FSA	0.37 kW	6SL3203-0BE17-7BA0	380 V to 480 V	11.4 A
	0.55 kW			
	0.75 kW			
	1.1 kW			
	1.5 kW			
	2.2 kW			
FSB	3 kW	6SL3203-0BE21-8BA0	380 V to 480 V	23.5 A
	4 kW			
FSC	5.5 kW			
FSD	7.5 kW	6SL3203-0BE23-8BA0	380 V to 480 V	49.4 A
	11 kW			
	15 kW			
FSE	18.5 kW	6SL3203-0BE27-5BA0	380 V to 480 V	72 A
	22 kW			
Single phase AC 230 V inverters				
FSAA/FSAB	0.12 kW	6SL3203-0BB21-8VA0	200 V to 240 V	20 A
	0.25 kW			
	0.37 kW			
	0.55 kW			
	0.75 kW			
FSAC	1.1 kW			
	1.5 kW			
FSB	1.1 kW	6SE6400-2FL02-6BB0	200 V to 240 V	26 A
	1.5 kW			
FSC	2.2 kW			
	3 kW	Siemens recommends you to use the line filter of Type "EPCOS B84113H000 G136" or equivalent.		

Installation

For the EMC-compliant installation of the external line filters, refer to Section "EMC-compliant installation (Page 45)".

Connecting the line filter to FSAA ... FSA

The figure below is an example that shows how to connect the line fiter to the inverter.

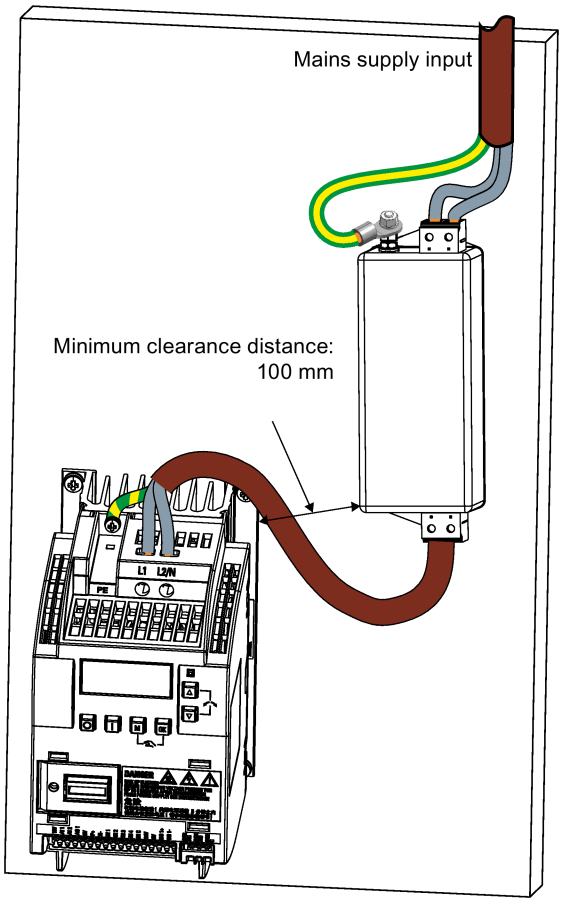

Connecting the line filter to FSB ... FSE

The figure below is an example that shows how to connect the line fiter to the inverter.

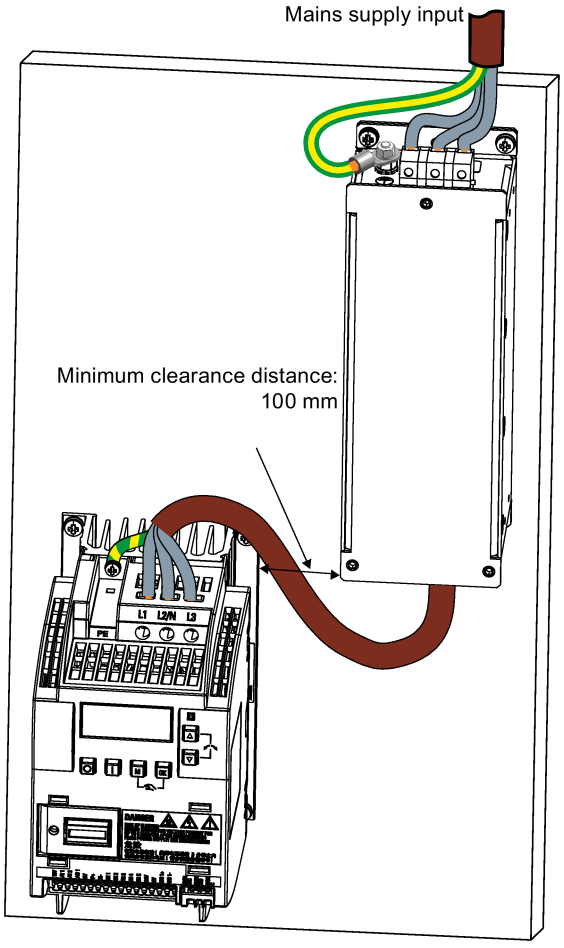

Mounting dimensions

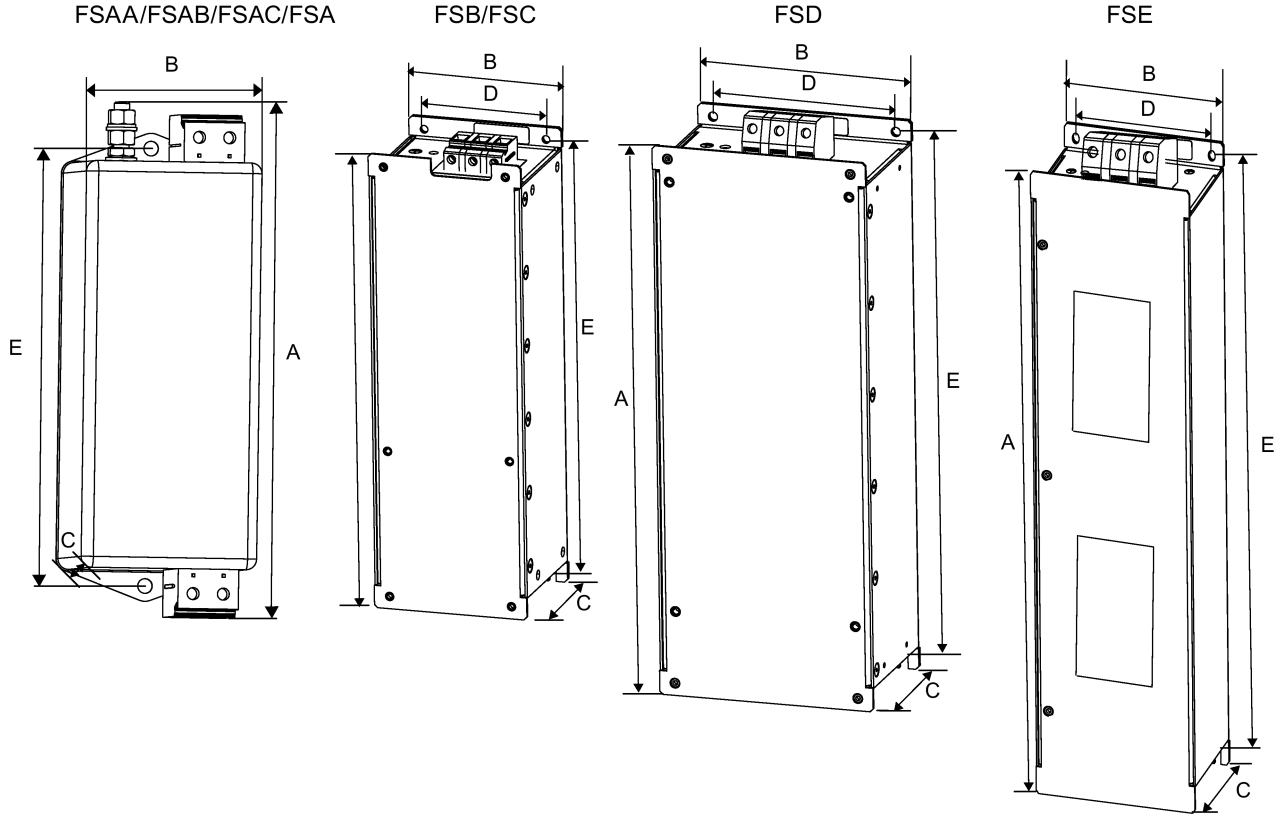

Article number	Dimensions (mm)					Weight (kg)	Fixing screw		Cable cross section (mm^2)	
	A	B	C	D	E		Size	Tightening torque (Nm)	Min.	Max.
Three phase AC 400 V inverters										
6SL3203-0BE17-7BA0	202	73	65	36.5	186	1.75	M4 (4)	0.6 to 0.8	1.0	2.5
6SL3203-0BE21-8BA0	297	100	85	80	281	4.0	M4 (4)	1.5 to 1.8	1.5	6.0
6SL3203-0BE23-8BA0	359	140	95	120	343	7.3	M4 (4)	2.0 to 2.3	6.0	16.0
6SL3203-0BE27-5BA0	400	100	140	75	385	7.6	M6 (4)	3.0	16.0	50.0
Single phase AC 230 V inverters										
6SL3203-0BB21-8VA0	168	59	53	-	143	0.9	M4 (2)	1.5	2.5	4
6SE6400-2FL02-6BB0	213	149	50.5	120	200	1.0	M5 (4)	1.5	1.5	6.0

B.1.8 Shield connection kits

Functionality

The shield connection kit is supplied as an option for each frame size. It allows easy and efficient connection of the necessary shield to achieve EMC-compliant installation of the inverter (see Section "EMC-compliant installation (Page 45)" for details).

Components

Inverter variant	Shield connection kit	
	Illustration	Components
FSAA/FSAB	Article number: 6SL3266-1AR00-0VA0 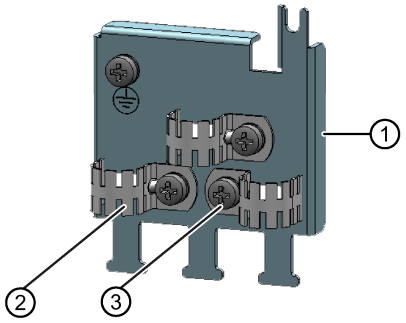	① Shielding plate ② 3 × cable shield clamps ③ 4 × M4 screws (tightening torque: 1.8 Nm ± 10%)
FSAC	Article number: 6SL3266-1AU00-0VA0 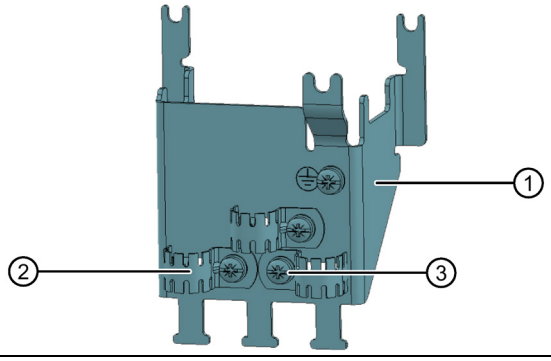	① Shielding plate ② 3 × cable shield clamps ③ 4 × M4 screws (tightening torque: 1.8 Nm ± 10%)
FSA	Article number: 6SL3266-1AA00-0VA0 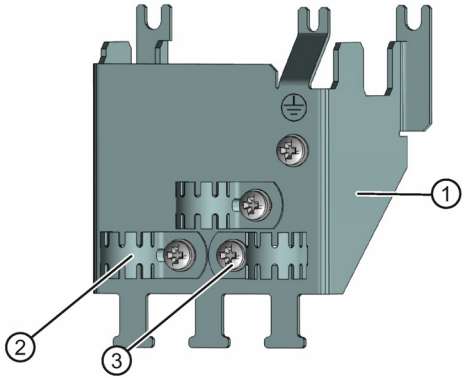	① Shielding plate ② 3 × cable shield clamps ③ 4 × M4 screws (tightening torque: 1.8 Nm ± 10%)

Inverter variant	Shield connection kit	
	Illustration	**Components**
FSB	Article number: 6SL3266-1AB00-0VA0 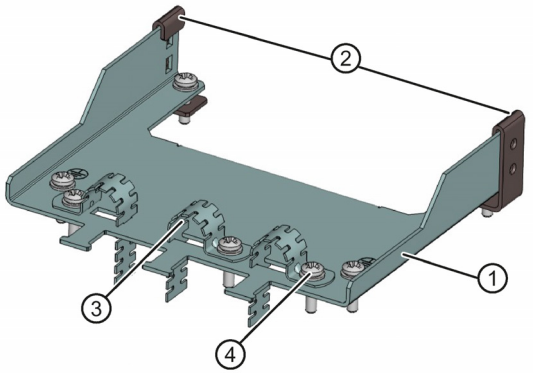	① Shielding plate ② 2 × clips[1)] ③ 3 × cable shield clamps ④ 7 × M4 screws (tightening torque: 1.8 Nm ± 10%)
FSC	Article number: 6SL3266-1AC00-0VA0 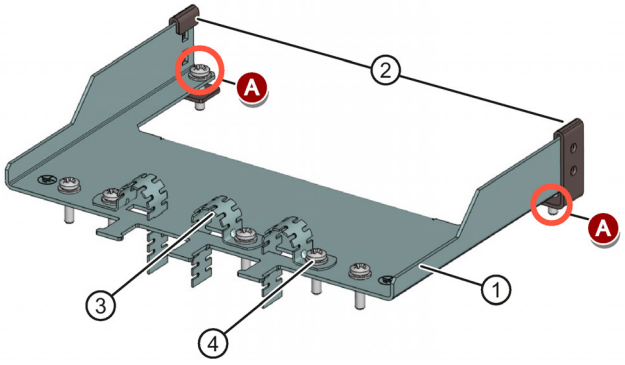	① Shielding plate ② 2 × clips[1)] ③ 3 × cable shield clamps ④ 7 × M4 screws (tightening torque: 1.8 Nm ± 10%) [2)]
FSD/FSE	Article number: 6SL3266-1AD00-0VA0 (FSD) Article number: 6SL3266-1AE00-0VA0 (FSE) 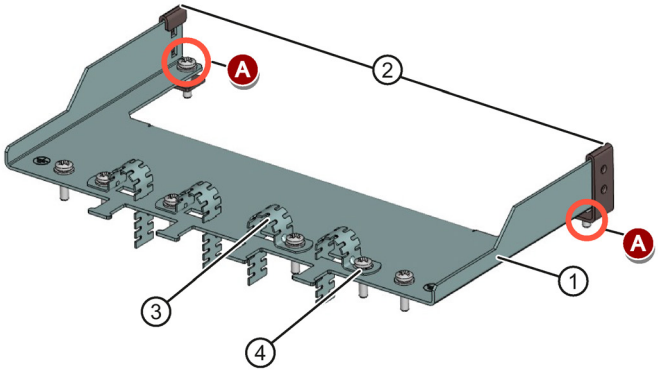	① Shielding plate ② 2 × clips[1)] ③ 4 × cable shield clamps ④ 8 × M4 screws (tightening torque: 1.8 Nm ± 10%) [2)]

1) The clips are required only when fixing the shielding plate to the cabinet panel-mounted inverter.

2) For "push-through" applications, you must use two M5 screws and nuts (tightening torque: 2.5 Nm ± 10%) rather than two M4 screws ("A" in the illustration) to fix the shielding plate to the inverter.

Outline dimensions (mm)

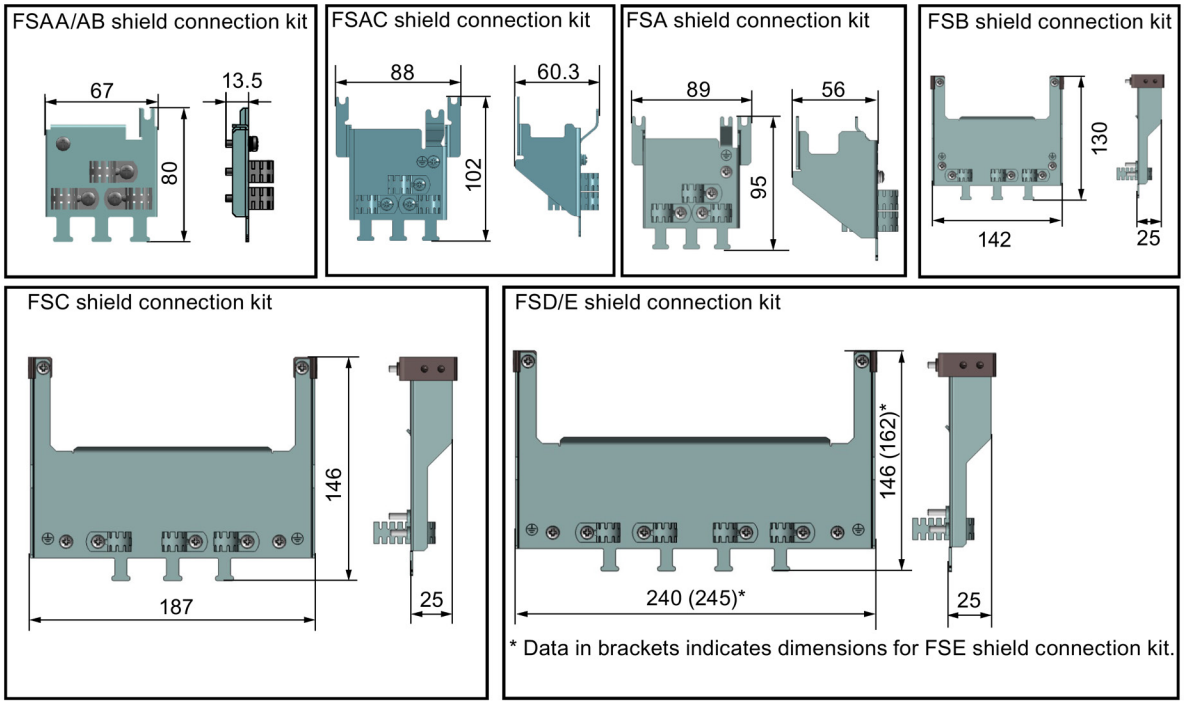

Fixing the shield connection kit to the inverter

If the inverter applies cabinet-panel mounting mode:	
Fixing to FSAA/FSAB 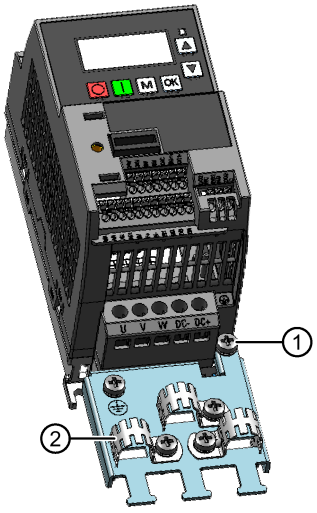	① Loosen the PE screw and slide the shielding plate from below, then retighten the screw to 1.8 Nm (tolerance: ± 10%). ② Fold the cable shield clamp to suit the cable diameter during inverter installation.

Fixing to FSA/FSAC 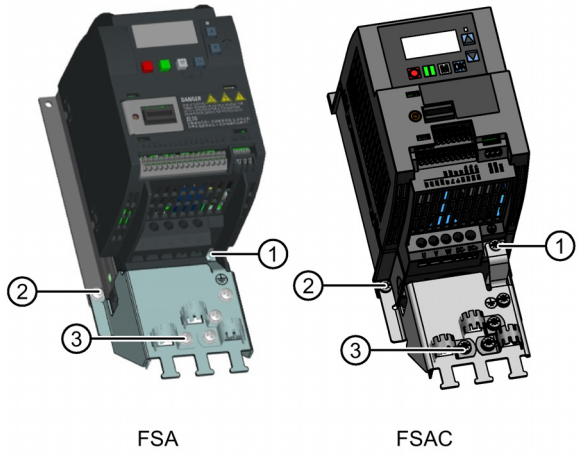 FSA FSAC	① Loosen the PE screw and slide the shielding plate from below, then retighten the screw to 1.8 Nm (tolerance: ± 10%). ② Clamp the heatsink between the shielding plate and the cabinet panel and tighten the screws and nuts to 1.8 Nm (tolerance: ± 10%). ③ Fold the cable shield clamp to suit the cable diameter during inverter installation.
Fixing to FSB/FSC/FSD/FSE 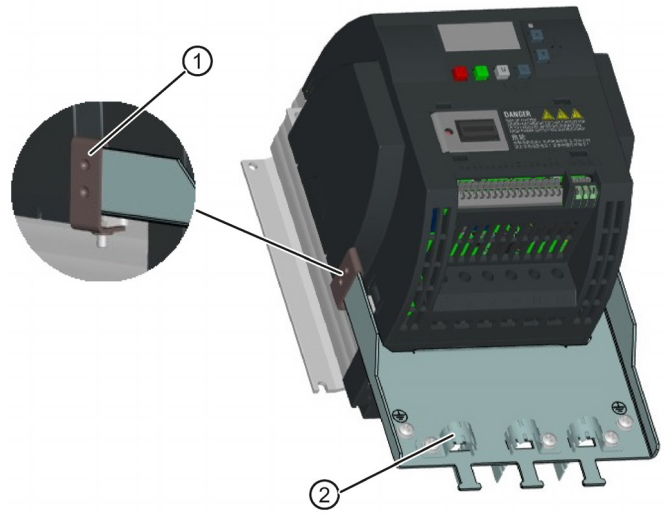 	① Clamp the heatsink between the clip and the shielding plate, and tighten the screw to 1.8 Nm (tolerance: ± 10%). ② Fold the cable shield clamp to suit the cable diameter during inverter installation.

If the inverter applies push-through mounting mode:	
Fixing to FSB/FSC/FSD/FSE 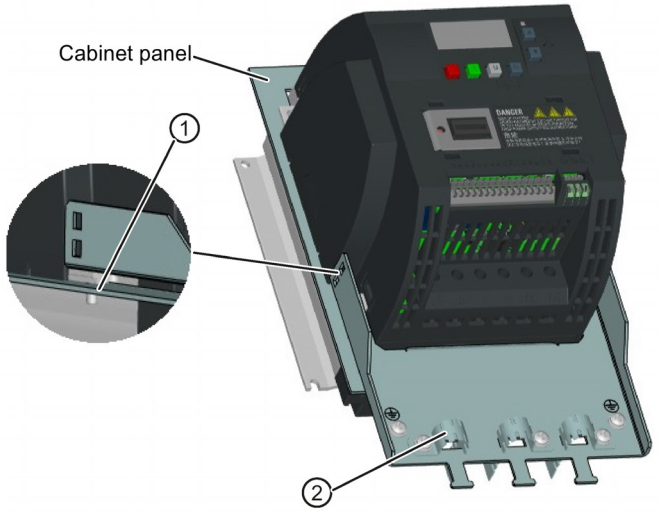 	Note that the clips are not required in this case. ① Clamp the heatsink between the shielding plate and the cabinet panel, and use two mating nuts instead of the clips to tighten the screws (M4 screws if frame size B or M5 screws if frame size C or D) from the back of the cabinet panel. Screw tightening toque: M4 = 1.8 Nm ± 10%; M5 = 2.5 Nm ± 10% ② Fold the cable shield clamp to suit the cable diameter during inverter installation.

B.1.9 Memory card

Functionality

A memory card can be used on the Parameter Loader and allows you to upload/download parameter sets to/from the inverter. For detailed use of the memory card, refer to Appendix "Parameter Loader (Page 345)".

Article number

Recommended SD card: 6SL3054-4AG00-2AA0

B.1.10 RS485 termination resistor

An RS485 termination resistor is used to terminate the bus for the RS485 communication between the SINAMICS V20 and SIEMENS PLCs. For detailed use of the termination resistor, refer to Section "Communicating with the PLC (Page 169)".

Article number: 6SL3255-0VC00-0HA0

B.1.11 Residual current circuit breaker (RCCB)

Note

The SINAMICS V20 inverter has been designed to be protected by fuses; however, as the inverter can cause a DC current in the protective earthing conductor, if a Residual Current Circuit Breaker (RCCB) is to be used upstream in the supply, observe the following:

- SINAMICS V20 single phase AC 230 V inverters (filtered) FSAC can be operated only on a type A 100 mA or type B(k) 300 mA RCCB.
- All SINAMICS V20 three phase AC 400 V inverters (filtered or unfiltered) can be operated on a type B(k) 300 mA RCCB.
- SINAMICS V20 three phase AC 400 V inverters (unfiltered) FSA to FSD and FSA (filtered) can be operated on a type B(k) 30 mA RCCB.
- When multiple inverters are in use, one inverter must be operated on one RCCB of the corresponding type; otherwise, overcurrent trips will occur.

[1] To use a type A RCCB, the regulations in this FAQ must be followed: Siemens Web site (http://support.automation.siemens.com/WW/view/en/49232264)

Ordering data

Frame size	Inverter power rating	Recommended RCCB article number [1]				
		RCCB Type A 30 mA	RCCB Type A 100 mA	RCCB Type A(k) 30 mA [2]	RCCB Type B(k) 30 mA [3]	RCCB Type B(k) 300 mA
Three phase AC 400 V inverters						
FSA	0.37 kW to 2.2 kW	-	-	-	5SM3342-4	5SM3642-4
FSB	3 kW to 4 kW					
FSC	5.5 kW					
FSD	7.5 kW	-	-	-	5SM3344-4	5SM3644-4
	11 kW	-	-	-	5SM3346-4	5SM3646-4
	15 kW					
FSE	18.5 kW	-	-	-	-	5SM3646-4
	22 kW	-	-	-	-	5SM3647-4
Single phase AC 230 V inverters						
FSAA/FSAB	0.12 kW to 0.75 kW	5SM3311-6	-	5SM3312-6KL01	5SM3321-4	5SM3621-4
FSAC	1.1 kW	5SM3312-6	5SM3412-6		5SM3322-4	5SM3622-4
	1.5 kW	5SM3314-6	5SM3414-6	5SM3314-6KL01	5SM3324-4	5SM3624-4
FSB	1.1 kW	5SM3312-6	-	5SM3312-6KL01	5SM3322-4	5SM3622-4
	1.5 kW	5SM3314-6		5SM3314-6KL01	5SM3324-4	5SM3624-4
FSC	2.2 kW					
	3 kW	5SM3316-6		5SM3316-6KL01	5SM3326-4	5SM3626-4

[1] You can select commercially available 5SM3 series RCCBs (as given in the table) or equivalent.

[2] Letter "k" in the RCCB type names indicates RCCB types with time delay.

[3] SINAMICS V20 three phase AC 400 V inverters (filtered) FSB to FSD cannot be operated on a type B(k) 30 mA RCCB.

B.1.12 DIN rail mounting kits (only for FSAA ... FSB)

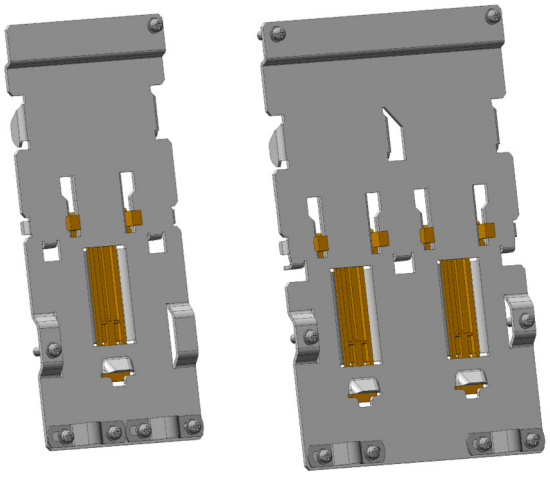

DIN rail mounting kit for FSAA/FSAB/FSAC/FSA

DIN rail mounting kit for FSB

Article numbers:

- 6SL3261-1BA00-0AA0 (for frame size AA/AB/AC/A)
- 6SL3261-1BB00-0AA0 (for frame size B)

B.1.13 Migration mounting kit for FSAA ... FSAC

Article numbers:

- 6SL3266-1ER00-0VA0 (for frame size AA/AB)
- 6SL3266-1EB00-0VA0 (for frame size AC)

Functionality

As frame size FSAA/FSAB has smaller outline dimensions, this migration mounting kit is supplied for easy installation of frame size AA/AB inverters to the G110 control cabinet or DIN rail. If the holes on your control cabinet were drilled to match frame size A, you can drill additional holes according to the outline dimensions of FSAA/FSAB, or use this option for installation.

Frame size FSAC can be directly installed to an FSA DIN rail mounting kit. You can also use the migration mounting kit for FSAC to install the FSAC to an FSB DIN rail mounting kit. If the holes on your control cabinet were drilled to match frame size B, you can drill additional holes according to the outline dimensions of FSAC, or use this option for an FSAC inverter.

Outline dimensions (mm)

For FSAA/FSAB	For FSAC
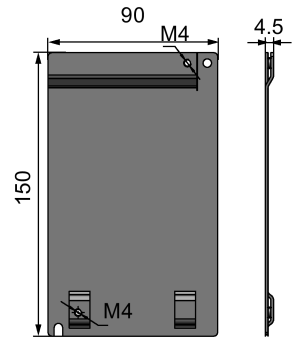 2 × M4 screws	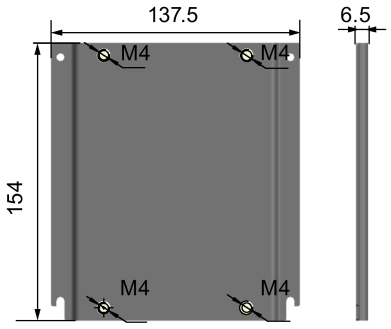 4 × M4 screws
Maximum tightening torque: 2.0 Nm; screw length: 6 mm ... 10 mm	

Fixing the migration mounting kit to the inverter

- Cabinet-panel mounting mode:

FSAA/FSAB

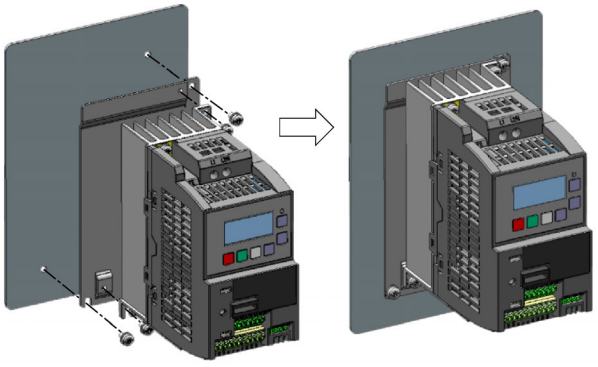

FSAC

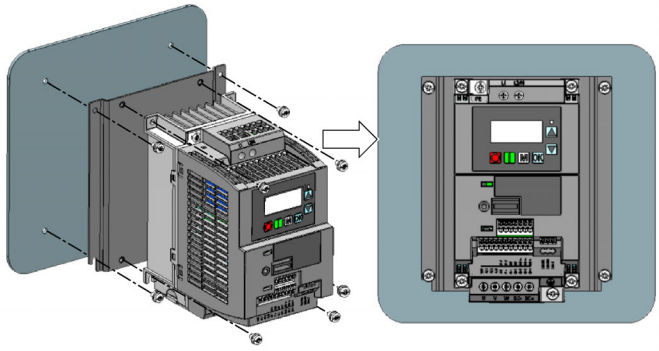

- DIN rail mounting mode:

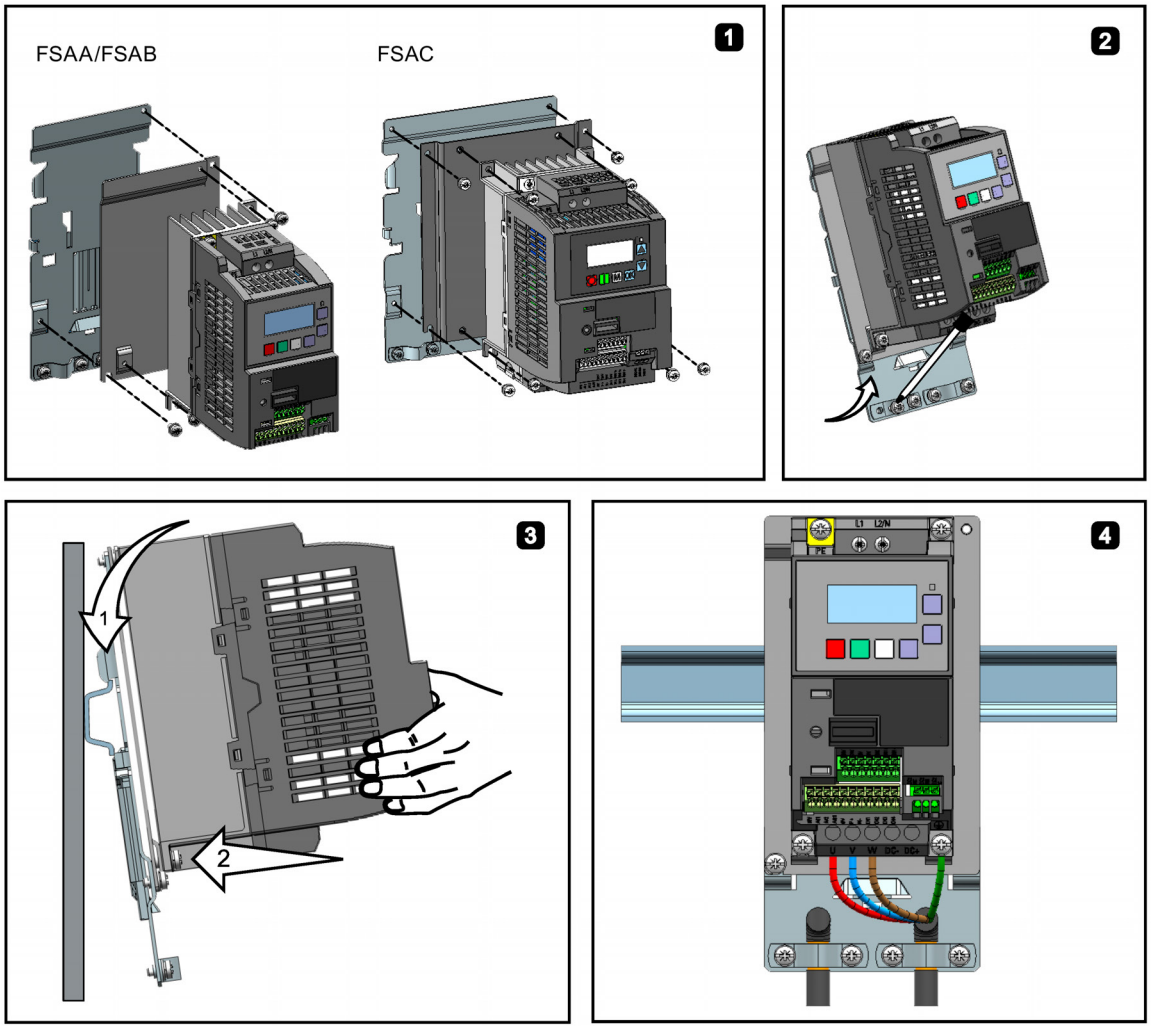

B.1.14 SINAMICS V20 Smart Access

Article number: 6SL3255-0VA00-5AA0

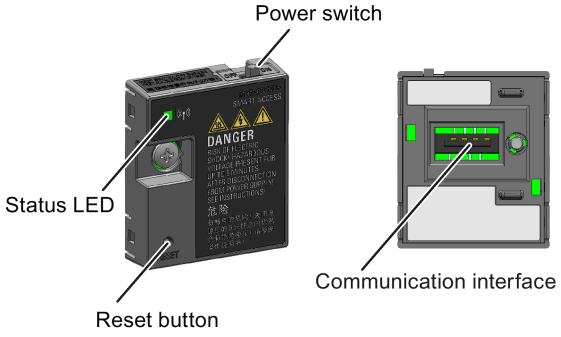

Outline dimensions (mm)

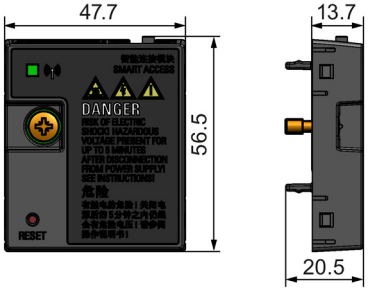

Functionality

SINAMICS V20 Smart Access is a Web server module with integrated Wi-Fi connectivity. It allows Web-based access to the inverter from a connected device (conventional PC with wireless network adapter installed, tablet or smart phone) to realize inverter operations including quick commissioning, inverter parameterization, JOG, monitoring, diagnostics, backup and restore, etc. This module is only for commissioning and thus cannot be used with the inverter permanently. For more information, see Chapter "Commissioning using SINAMICS V20 Smart Access (Page 135)".

Button description

The reset button on SINAMICS V20 Smart Access enables you to perform the following functions:

- Basic upgrading (Page 164)
- Wi-Fi configuration resetting

  For more information, see the description later in this section.

Technical specifications

Firmware version	≥ V01.02.05
Rated voltage	24 V DC
Wireless technology and working frequency	Wi-Fi 2400 MHz to 2483.5 MHz
Maximum radio frequency power	17.5 dBm (EIRP*)
Wireless modulation type	802.11 b/g
Modulation technology	• 802.11b: CCK, DSSS • 802.11g: OFDM
Antenna gain	1.9 dBi
Extreme temperature range	-10 °C to 60 °C

* EIRP means effective isotropic radiated power.

Note

The wireless communication distance (without barrier) can reach a maximum of 140 m; however, this value can vary with the environmental conditions.

Fitting SINAMICS V20 Smart Access to the inverter

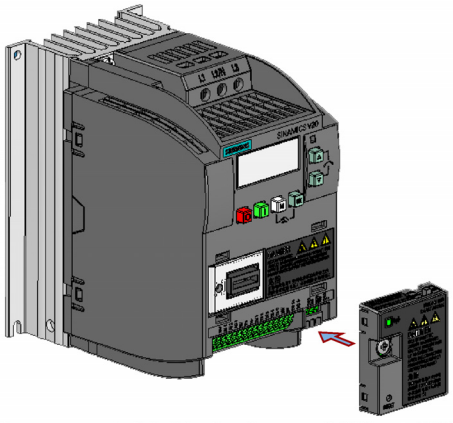

Recommended tightening torque: 0.8 Nm ± 10%

For more safety instructions during the fitting process, see Section "Fitting SINAMICS V20 Smart Access to the inverter (Page 137)".

Resetting Wi-Fi configuration

When the inverter is in power-on state, pressing the reset button on the module resets the Wi-Fi configuration to defaults:

- Wi-Fi SSID: V20 smart acess_xxxxxx ("xxxxxx" stands for the last six characters of the MAC address of SINAMICS V20 Smart Access)
- Wi-Fi password: 12345678
- Frequency channel: 1

Note

Check and make sure the status LED lights up solid green/solid yellow or flashes green before pressing the reset button to reset the Wi-Fi configuration. After you press the reset button, make sure you keep the button pressed until the status LED flashes yellow. Only then can the Wi-Fi configuration be reset successfully with the reset button.

Status LED

LED color		Meaning
Solid red		One client is connected to the module and USS communication between the module and the inverter fails.
Solid green		The module is running and one client is connected to it.
Solid yellow		The module is running and no client is connected to it.
Flashing red	Flashing at 1 Hz	No client is connected to the module and USS communication between the module and the inverter fails. *
	Flashing at 0.5 Hz	The module is starting.
Flashing green		The module is running and one WebSocket channel is connected to it.
Flashing yellow		Reminder of restarting the module.
Flashing red and yellow alternatively		The Web application, firmware, or service package is upgrading.

* In case of USS communication failure between the module and the inverter, you must power off the module by sliding its power switch to "OFF" first, keep the reset button pressed and power on the module by sliding its power switch to "ON", and then update the firmware version of the module. For more information about firmware update, see Section "Upgrading Web application and SINAMICS V20 Smart Access firmware versions (Page 164)".

B.1.15 I/O Extension Module

Article number: 6SL3256-0VE00-6AA0

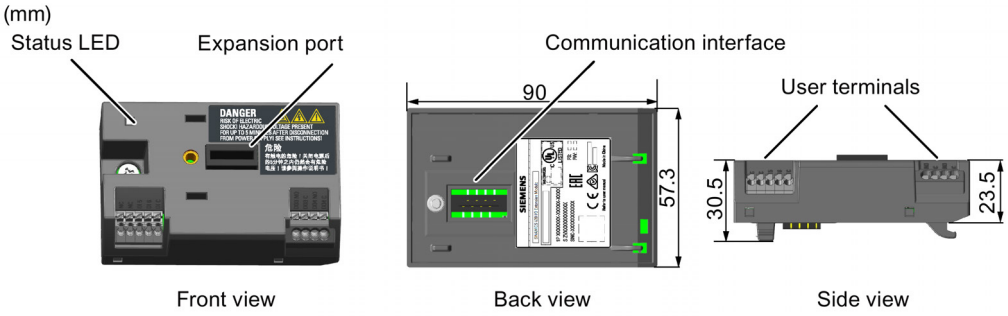

Functionality

The SINAMICS V20 I/O Extension Module supports the SINAMICS V20 400 V variants with firmware version 3.94 and later versions. It expands the number of V20 I/O terminals, enabling more inverter control functions. You can use the expansion port on the SINAMICS V20 inverter to connect the module. This module provides an expansion port to connect the SINAMICS V20 Smart Access or the BOP Interface Module.

Status LED

LED color	Description
Solid yellow	The module is powered on and is initializing.
Solid green	The module works properly and the communication between the module and the inverter is successfully established.
Flashing red at 2 Hz	The communication between the module and the inverter fails.

Connecting the device

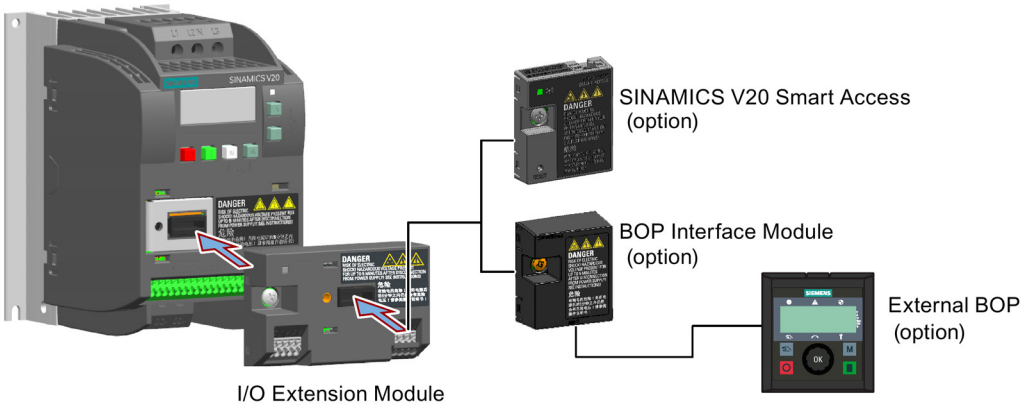

NOTICE
Equipment malfunctions due to improper installing or removing Installing or removing the SINAMICS V20 I/O Extension Module when the V20 inverter is in power-on state can cause malfunctions of the SINAMICS V20 I/O Extension Module. • Make sure that the V20 inverter is powered off before installing or removing the SINAMICS V20 I/O Extension Module.

Note

Remove the I/O Extension Module before fitting the Parameter Loader to upload and download V20 parameters.

Wiring diagram and terminal description

For more information about the wiring diagram and terminal description, see Sections "Typical system connections (Page 34)" and "Terminal description (Page 39)".

B.1.16 User documentation

Operating Instructions (Chinese version)

Article number: 6SL3298-0AV02-0FP0

B.2 Spare parts - replacement fans

Article numbers

- 6SL3200-0UF06-0AA0 (for frame size AC)
- 6SL3200-0UF01-0AA0 (for frame size A)
- 6SL3200-0UF02-0AA0 (for frame size B)
- 6SL3200-0UF03-0AA0 (for frame size C)
- 6SL3200-0UF04-0AA0 (for frame size D)
- 6SL3200-0UF05-0AA0 (for frame size E)

Replacing fans

Proceed through the steps as illustrated below to remove the fan from the inverter. To re-assemble the fan, proceed in reverse order. When re-assembling the fan, make sure that the arrow symbol ("A" in the illustration) on the fan points to the inverter rather than the fan housing, the position for the fan cable exit point ("B") as well as the mounting orientation and position of the cable connector ("C") are sufficient for connecting the fan cable to the inverter.

Replacing the fan from FSAC

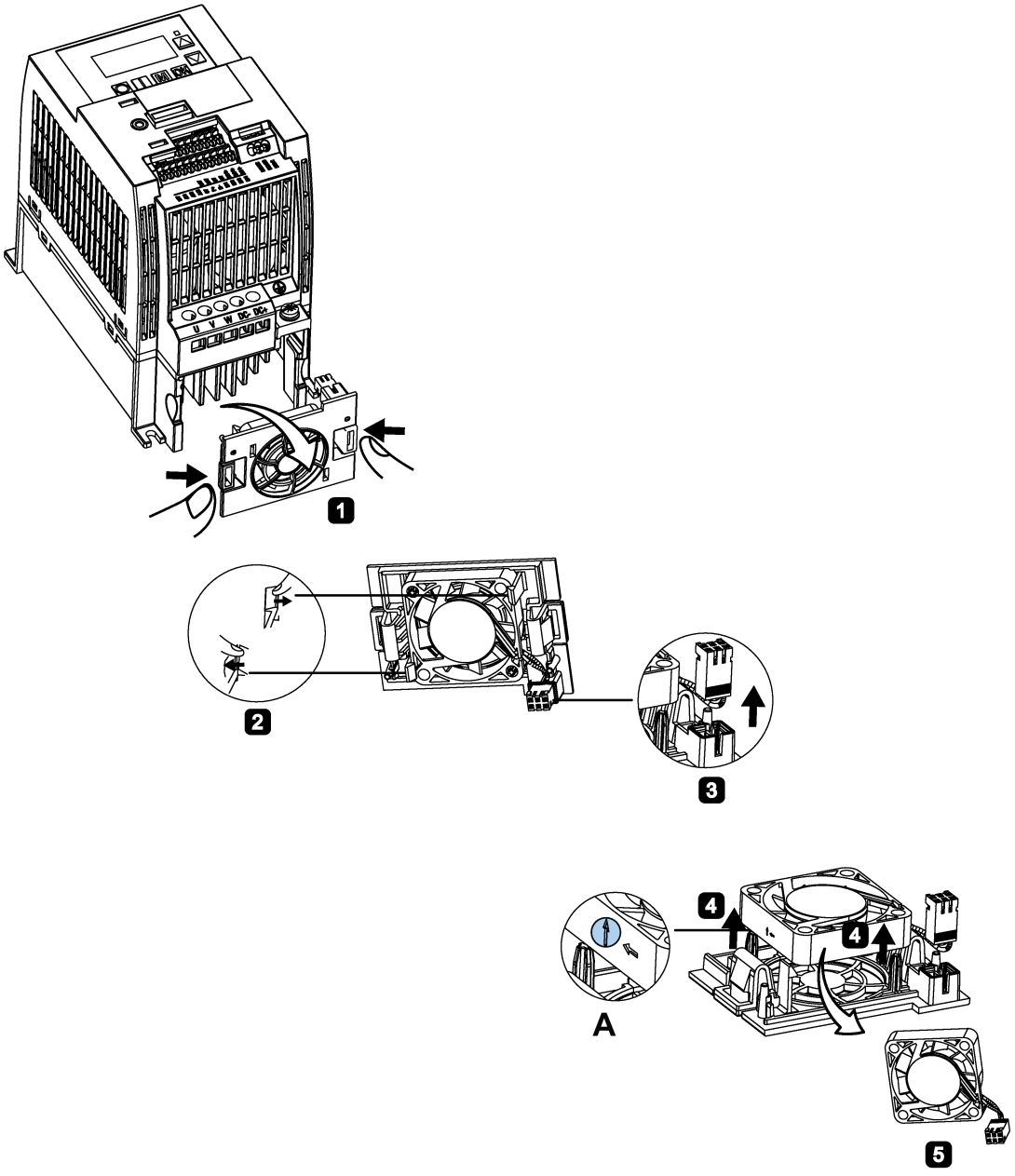

Replacing the fan from FSA

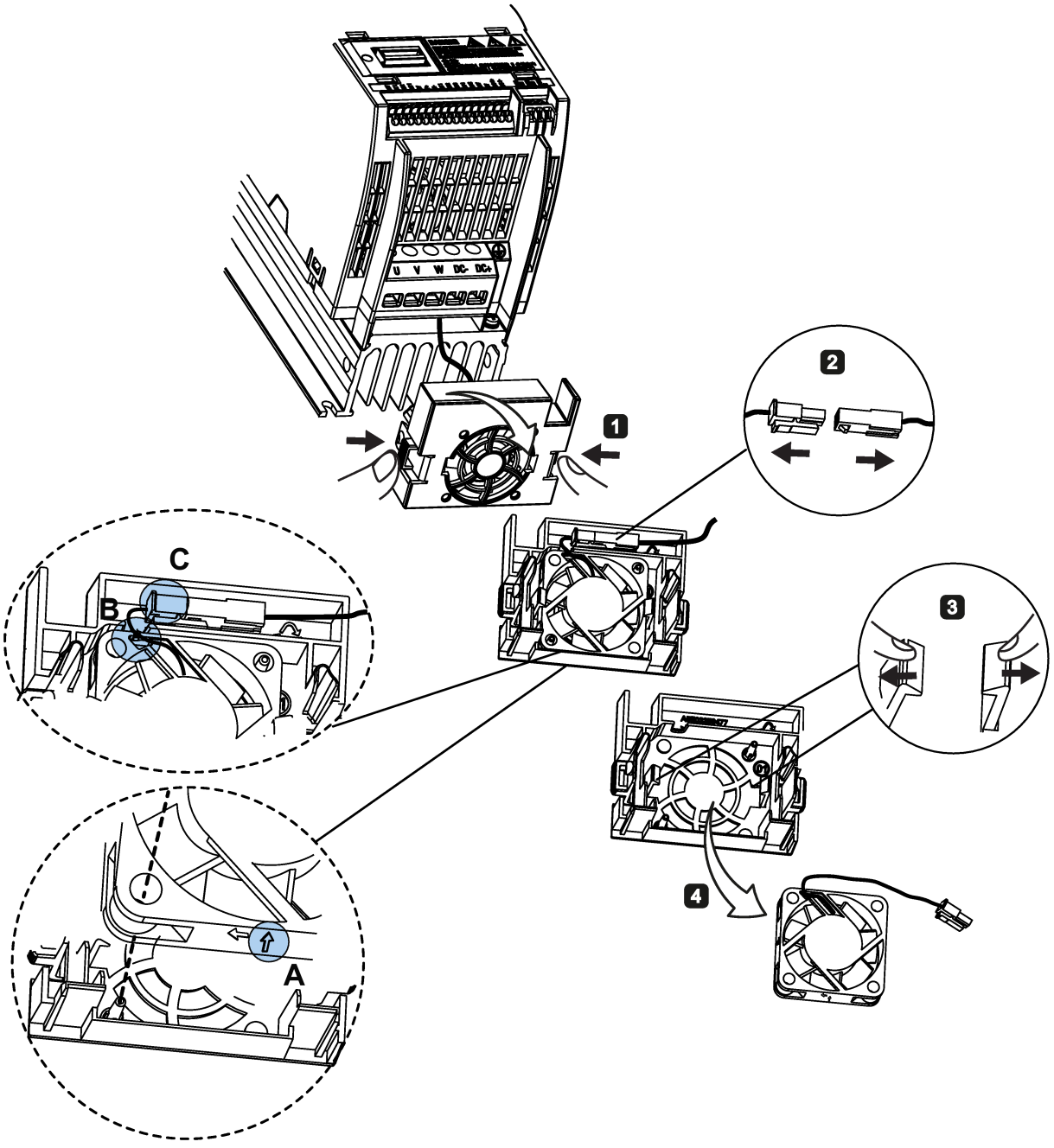

Replacing the fan(s) from FSB, FSC or FSD

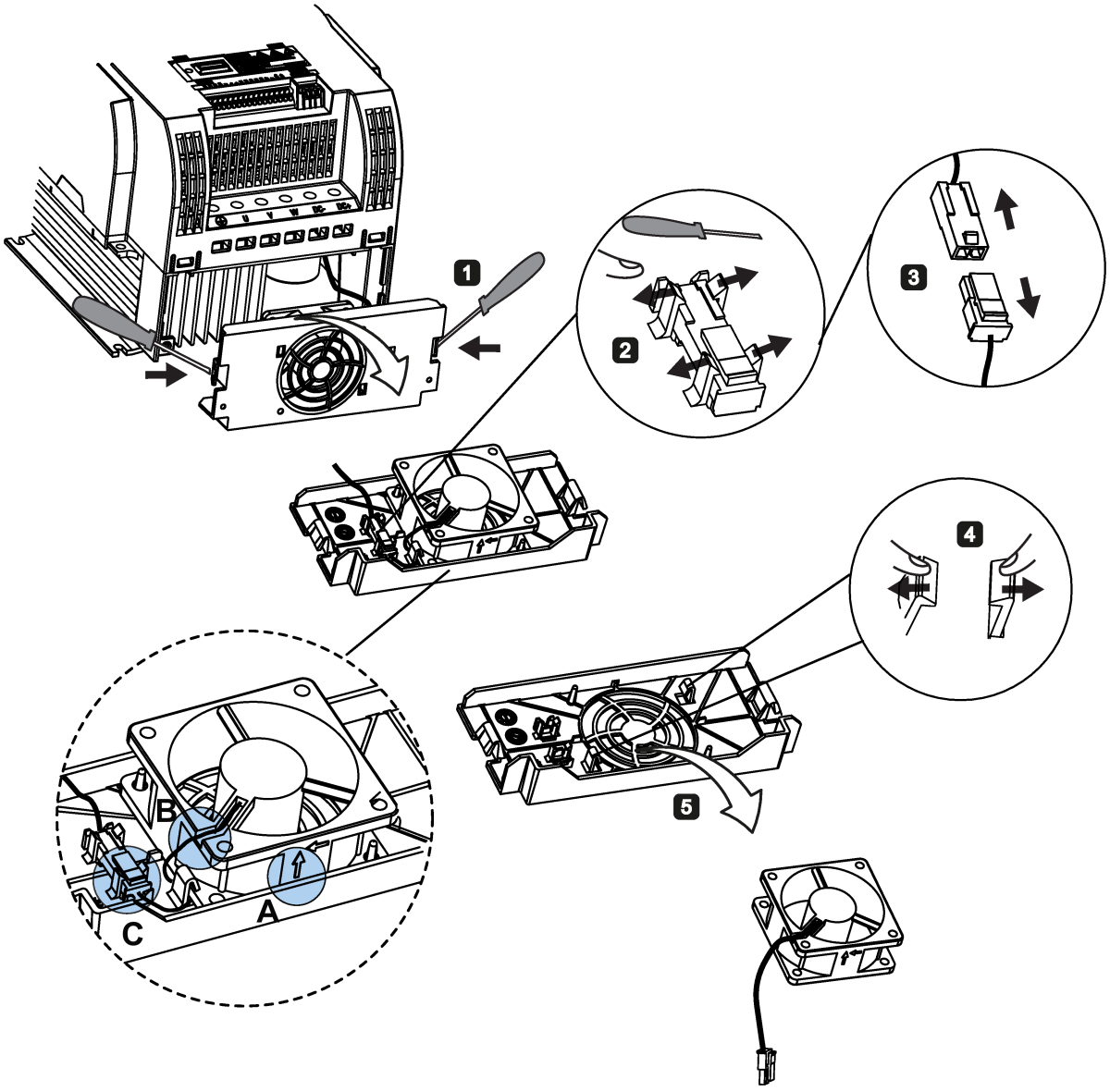

Replacing the fans from FSE

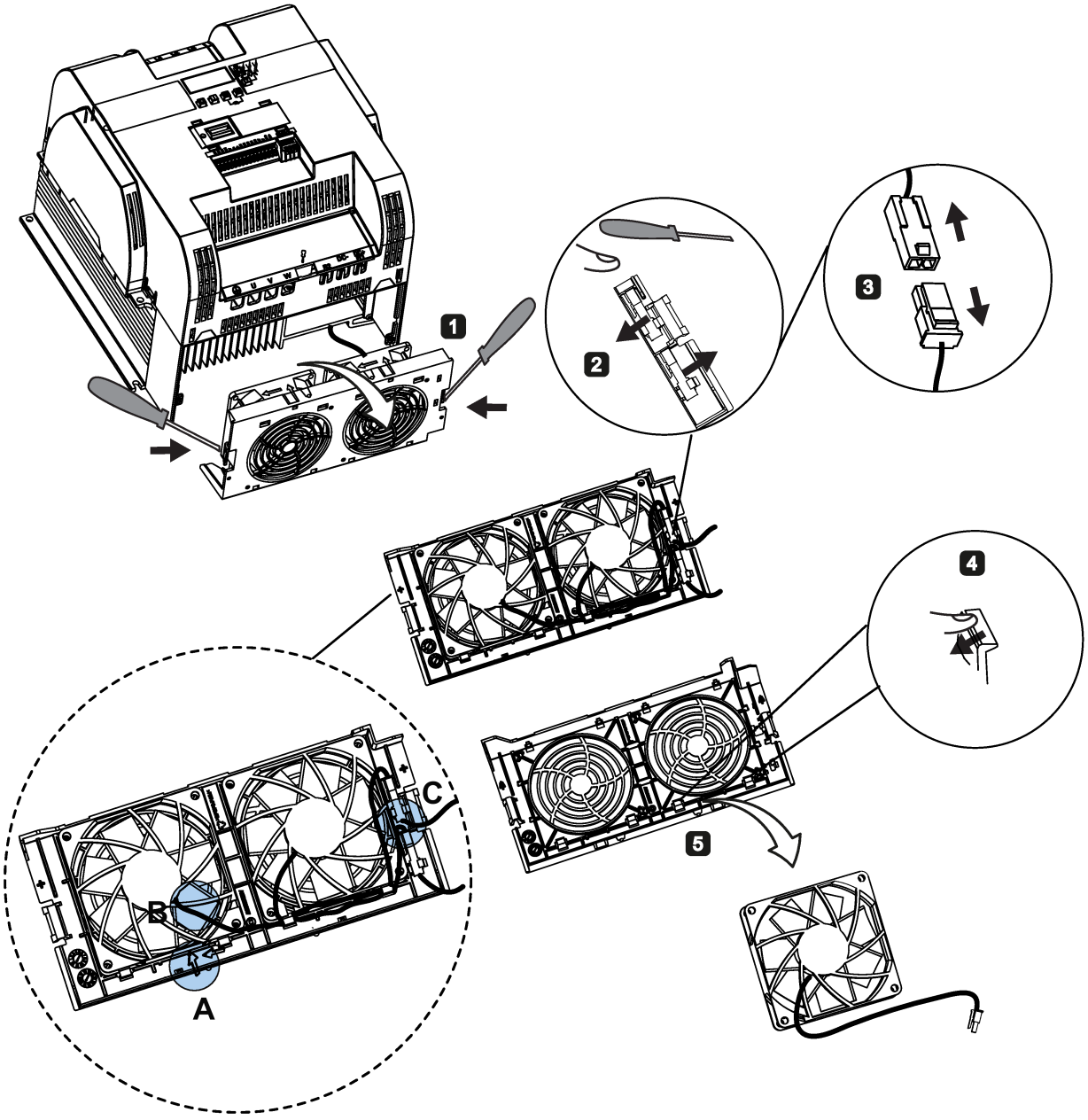

General license conditions

C

For Resellers: In order to avoid infringements of the license conditions by the reseller or the buyer these instructions and license conditions and accompanying CD – if applicable - have to be forwarded to the buyers.

1) Siemens License Conditions

General License Conditions for Software Products for Automation and Drives

(2011-08-01)

1 Supply of Software to Licensee and Granting of Rights to use the Software

1.1 These General License Conditions shall exclusively apply to the delivery of Software for Automation and Drives to the Licensee. General terms and conditions of the Licensee shall apply only where expressly accepted in writing by us. The scope of delivery of the Software shall be determined by the congruent mutual written declarations of both parties. We shall grant the Licensee rights to use the software specified in the Confirmation of Order or, if the Licensee does not receive a Confirmation of Order, the software specified in the Certificate of License or that specified in the Software Product Sheet, if the Licensee is instead submitted a Software Product Sheet (hereinafter referred to as "SW"). The Certificate of License and the Software Product Sheet shall be collectively referred to as "CoL" hereinafter. The Licensee shall be submitted the CoL when the SW is supplied or in conjunction with the delivery bill. The way in which the SW is supplied is also derived directly from the Confirmation of Order or from the SW purchase order number contained in the Confirmation of Order, in conjunction with the associated order data of our catalog valid at the time of the Confirmation of Order (hereinafter collectively referred to as "Order Data"), or from the CoL. If the Licensee does not receive a data medium, it shall be authorized to copy the SW already available to it to the extent necessary to exercise the rights to use the SW granted to it. The aforesaid shall apply, mutatis mutandis, to electronic supply of the software (downloading). Where reference is made to the Order Data or the CoL in these General License Conditions, the reference to the CoL is of significance if the Licensee has not received a Confirmation of Order. In any case, the data contained in the Order Data is also contained in the CoL.

1.2 The Documentation relating to the SW (hereinafter referred to as "Documentation") shall be purchased separately, unless either the Order Data or CoL contains a stipulation stating that it belongs to the scope of delivery. If the Licensee is authorized to copy the SW in accordance with Clause 1.1, this shall also apply to the Documentation provided that it is included in the scope of delivery.

1.3 In the event that we submit a License Key to the Licensee, which unlocks the SW (hereinafter referred to as "License Key"), this License Key must also be installed.

1.4 The rights granted to the Licensee with respect to the SW are based on the License Type (see Section 2) and the Software Type (see Section 3). The license and Software Types are detailed in the Order Data or CoL. If the SW is supplied electronically or if copying rights are granted for it, the rights and duties specified in these General License Conditions shall apply to the legitimately generated copies.

1.5 If the Licensee is legitimately in possession of a previous SW version/release (hereinafter referred to as "Previous Version"), the Licensee shall be authorized to exercise the rights to use the SW granted to it either with respect to the SW or - if this is intended from a technical point of view - to the Previous Version, at its own discretion (downgrading). If the SW is an Upgrade or PowerPack in accordance with Section 4, Section 4 shall apply additionally.

1.6 If Previous Versions are listed in the Readme file of the SW under the category “parallel use”, the Licensee has the right to exercise, alternatively to the user rights granted to him for the SW, the user rights for the listed Previous Versions in one (1) Instance. If the “Type of use” named in the Order Data or the CoL is: “Installation” or “User”, the Licensee is entitled to the previously described right additionally to and at the same time as the Previous Versions listed in one Instance. An “Instance” in the context of these General License Conditions is either an instance in a physical operating system environment or an instance in a virtual operating system environment. The transferability of the user rights onto Previous Versions is only permissible in conjunction with the user rights for the SW in accordance with Clause 5.3.

1.7 In case the Licensee obtains only the data media but no license as per the Order Data or the CoL, any use of the SW by the Licensee is subject to the acquisition of a license according to Section 2. Up to the acquisition of the license, the Licensee is not entitled to supply the SW to third parties.

1.8 In case the SW contains Open Source Software or any similar software of a third party (hereinafter referred to as "OSS") the OSS is listed in the Readme_OSS-file of the SW. The Licensee is entitled to use the OSS in accordance with the respective license conditions of the OSS. The license conditions are provided on the same data carrier as the SW. The license conditions of the respective OSS shall prevail over these General License Conditions with respect to the OSS. If the license conditions of the OSS require the distribution of the source code of such OSS we shall provide such source code on request against payment of the shipping and handling charges.

1.9 The SW may be or contain licensed software other than OSS, i.e. software which has not been developed by us itself but which has been licensed to us by a third party (hereinafter referred to as the "Licensor"), e.g. Microsoft Licensing Inc. If the Licensee receives the terms and conditions stipulated by the relevant Licensor together with the SW in the Readme_OSS file in this case, such terms and conditions shall apply with respect to the Licensor's liability vis-à-vis the Licensee. Our own liability vis-à-vis the Licensee shall be governed in any case by these General License Conditions.

2 License Type

Depending on the License Type, the Licensee shall be granted the following rights to the SW:

2.1 Single License (One Off License, Copy License) The term "One Off License" or "Copy License" which may be used in the Software Product Sheet corresponds to the term "Single License". The following regulation shall apply to the full scope of the One Off License / Copy License. The Licensee shall be granted the non-exclusive right, transferable in accordance with Clause 5.3 and valid for an unlimited period of time, to install the SW in one (1) Instance and to utilize the SW thus installed in the manner specified in the Order Data or CoL (see "Type of Use").

2.2 Floating License The Licensee shall be granted the non-exclusive right, transferable in accordance with Clause 5.3 and valid for an unlimited period of time, to install the SW on any desired number of the Licensee's hardware devices. The number of objects (for example,

users or devices) permitted to utilize the SW at the same time can be derived from the Order Data or CoL (see "Type of Use).

2.3 Rental License The Licensee shall be granted the non-exclusive right, transferable in accordance with Clause 5.3 and limited in time as stipulated in the Order Data or CoL (see "Type of Use"), to install and use the SW in one (1) Instance. If the period of use is specified in hours, the usage decisive for the calculation of the time limit commences with the software start-up and finishes with its shut-down. If the period of usage is specified in days, weeks or months, the specified period, which commences in conjunction with the first SW start-up, shall apply independently of the actual time of usage. If the period of use is specified with a date, the right of use ends on this date – regardless of the actual period of use.

2.4 Rental Floating License The Licensee shall be granted the non-exclusive right, transferable in accordance with Clause 5.3 and limited in time as stipulated in the Order Data or the CoL (s. “Type of use”), to install the SW on any desired number of the Licensee's hardware devices. The number of objects (for example, users or devices) permitted to utilize the SW at the same time can be derived from the Order Data or CoL (see "Type of Use) as well. If the period of use is specified in hours, the usage decisive for the calculation of the time limit commences with the software start-up and finishes with its shut-down. If the period of usage is specified in days, weeks or months, the specified period, which commences in conjunction with the first SW start-up, shall apply independently of the actual time of usage. If the period of use is specified with a date, the right of use ends on this date – regardless of the actual period of use.

2.5 Demo License The Licensee shall be granted the non-exclusive right, transferable in accordance with Clause 5.3 and limited in time as stipulated in the Order Data or the CoL (s. “Type of use”), to install the SW in one (1) Instance and to use it for validation purposes. If the period of usage is specified in days, weeks or months, the specified period, which commences in conjunction with the first SW start-up, shall apply independently of the actual time of usage. If the period of use is specified with a date, the right of use ends on this date – regardless of the actual period of use.

2.6 Demo Floating License The Licensee shall be granted the non-exclusive right, transferable in accordance with Clause 5.3 and limited in time as stipulated in the Order Data or the CoL (s. “Type of use”), to install the SW on any desired number of the Licensee's hardware devices. The number of objects (for example, users or devices) permitted to utilize the SW at the same time can be derived from the Order Data or CoL (see "Type of Use) as well. If the period of usage is specified in days, weeks or months, the specified period, which commences in conjunction with the first SW start-up, shall apply independently of the actual time of usage. If the period of use is specified with a date, the right of use ends on this date – regardless of the actual period of use.

2.7 Trial License The Licensee shall be granted the non-exclusive and non-transferable right to install the SW in one (1) Instance and to use it for validation purposes in the manner specified in the Order Data or CoL (see "Type of Use"). The period of usage is limited to 14 days and commences with the SW start-up, unless a different period of usage is specified in the Order Data or CoL.

3 Software Type

If the Software Type is not specified in the Order Data or CoL, the rights specified in Clause 3.2 (Runtime Software) shall apply to the SW.

3.1 Engineering Software (hereinafter referred to as "E-SW") In the event that the Licensee uses E-SW to generate its own programs or data containing parts of the E-SW, the Licensee shall have the right, without having to pay any license fee, to copy and to use these parts of

the E-SW as a part of its own programs or data, or to supply them to third parties for use. In the event that such parts are supplied to third parties for use, these parties shall be bound in writing to comply with stipulations corresponding to those in Clauses 5.1 and 5.2 with respect to the above parts of the E-SW.

3.2 Runtime Software (hereinafter referred to as "R-SW") If the Licensee incorporates R-SW or any parts thereof into its own programs or data, it shall purchase a license with respect to the R-SW each time it installs or copies - depending on what is done first - its own programs or data containing RSW or parts thereof, in accordance with the relevant intended Type of Use and on the basis of the Siemens catalog valid at that time. In the event that the Licensee supplies the specified programs or data to third parties for their use, these parties shall be bound in writing to adhere to stipulations corresponding to those in Section 5, with respect to the R-SW parts contained therein. The aforesaid shall not affect the Licensee's obligation to purchase a license for the R-SW if the RSW original is copied. If the R-SW contains tools for parameterization/configuration and extended rights have been granted in this regard, this will be detailed in the readme file of the R-SW.

4 Upgrade and PowerPack

If it is apparent from the Order Data or CoL, e.g. by the addition "Upgrade" or “PowerPack” after the SW product name, that the SW is an upgrade for another software item (hereinafter referred to as "Source License"), the rights originally granted to the Licensee to use the Source License end in conjunction with the upgrade measure. The rights of use in accordance with Clause 1.6 remain unaffected by this. However, the Licensee is entitled to undo the upgrading (downgrading) - if this is intended from a technical point of view - and to exercise the rights to use the SW granted to it with respect to the Source Version in accordance with Clause 1.5.

5 Further Rights and Duties of the Licensee

5.1 Unless a stipulation to the contrary relating to a specific number of copies is contained on the data medium or in the readme file of the SW, the Licensee may generate an appropriate number of copies of every item of SW which it is authorized to use in accordance with these General License Conditions, where such copies shall be used exclusively for data backup purposes. Furthermore the Licensee may only copy the SW if and insofar as it has been granted copying rights by us in writing.

5.2 The Licensee shall not be entitled to modify, decompile or reverse engineer the SW. Nor may it extract any individual parts unless this is permitted by mandatory copyright law. Furthermore, the Licensee shall not be entitled to remove any alphanumeric identifiers, trademarks or copyright notices from the SW or the data medium and, insofar as it is entitled to make copies of the SW, shall copy them without alteration. The aforementioned regulation shall apply accordingly to the Documentation supplied in accordance with Section 1.

5.3 The Licensee shall be entitled to completely transfer the right to use the SW granted to it to a third party, provided that it concludes a written agreement with the third party in conformance with all of the conditions contained in this Section 5 and on the proviso that it does not retain any copies of the SW. If the Licensee has received a License Key for the SW, this key shall be supplied to the third party together with the SW. Furthermore, the third party shall be submitted the CoL together with these General License Conditions. The Licensee shall submit the CoL received for the SW to us at any time, if requested.

5.4 If the SW is a PowerPack or an Upgrade, the Licensee shall keep the CoL of the Source License and submit it to us at any time, if requested, together with the CoL for the SW. In the event that the Licensee transfers its right to use the PowerPack SW or Upgrade SW in

accordance with Clause 5.3, it shall also submit the CoL of the Source License to the third party.

5.5 If the Licensee receives a data medium which, in addition to the SW, contains further software products which are released for use, then it shall have the right to use these released software products exclusively for validation purposes, for a limited period of time and free of charge. The period of use shall be limited to 14 days, commencing with the first start-up of the relevant software program unless a different period is specified e.g. in the readme file of the relevant software product. These software products supplied exclusively for validation purposes shall be governed, mutatis mutandis, by the stipulations contained in these General License Conditions. The Licensee shall not be authorized to pass on these software products separately, i.e. without the SW, to a third party.

The conditions of the purchase contract apply if not otherwise stipulated hereafter for the Open Source Software.

2) License Conditions and Disclaimers for Open Source Software and other Licensed Software

In the product "SINAMICS V20", Copyright Siemens AG, 2015 (hereinafter "Product"), the following Open Source Software is used either unchanged or in a form that we have modified, and additionally the other License Software noted below:

Liability for Open Source Software

Open Source Software is provided free of charge. We are liable for the Product including Open Source Software contained in accordance with the license conditions applicable to the Product. Any liability for use of Open Source Software beyond the program flow intended for the Product is explicitly excluded. Furthermore, any liability for defects resulting from modifications to the Open Source Software by you or third parties is excluded.

We do not provide any technical support for the Product if it has been modified.

Availability of Source Code

Certain license conditions of third-party software components used in this product may require Siemens to provide you with the source code and additional information for such components. In most cases, Siemens provides this information on or with the device. In case Siemens is technically unable to do so, you may request a copy of this information against payment of shipping and handling charges. Please send your request to the address provided at the end of this section.

Siemens AG

Digital Factory

Customer Services DF&PD

DF CS SD CCC TS

Gleiwitzer Str. 555

90475 Nuernberg, Deutschland

Internet: http://www.siemens.com/automation/support-request

Tel.: +49 911 895 7222

Email: support.automation@siemens.com

Please note the following license conditions and copyright notices applicable to Open Source Software and other License Software:

Component	**Open Source Software ("OSS") [Yes/No]**	Copyright Information / File
FatFS R0.08a	YES	LICENSE AND COPYRIGHT INFORMATION FOR COMPONENT FATFS R0.08A
FatFS R0.10c [1)]	YES	LICENSE AND COPYRIGHT INFORMATION FOR COMPONENT FATFS R0.10c
Jquery.touchSwipe.js 1.6.15 [2)]	YES	LICENSE AND COPYRIGHT INFORMATION FOR COMPONENT jquery.touchSwipe.js 1.6.15
TI CC3200 HTTPServer 1.2.0 [3)]	YES	LICENSE AND COPYRIGHT INFORMATION FOR COMPONENT TI CC3200 HTTPServer 1.2.0
GNU GCC libgcc 4.8.3	YES	LICENSE AND COPYRIGHT INFORMATION FOR COMPONENT GNU GCC LIBGCC 4.8.3
Lua 5.2.1	YES	LICENSE AND COPYRIGHT INFORMATION FOR COMPONENT LUA 5.2.1
STM32F4xx Standard Peripherals Library V1.3.0	NO	LICENSE AND COPYRIGHT INFORMATION FOR COMPONENT STM32F4XX STANDARD PERIPHERALS LIBRARY V1.3.0

[1), 2), 3)] Apply to SINAMICS V20 Smart Access only

LICENSE CONDITIONS AND COPYRIGHT NOTICES

For detailed information about license conditions and copyright notices of the individual software mentioned in the above table, visit Siemens Service and Support Web site at https://support.industry.siemens.com/cs/ww/en/ps/13208.

Index

A

Advanced functions
- Automatic restart, 117
- Blockage clearing, 111
- Cavitation protection, 126
- Condensation protection, 119
- Dual ramp function, 128
- Economy mode, 113
- Flying start, 116
- Free functions blocks (FFBs), 115
- Frost protection, 118
- Hammer start, 109
- High/low overload (HO/LO) mode, 132
- Motor staging, 123
- Sleep mode, 120
- Super torque, 108
- UL508C/UL61800-5-1-compliant motor overheat protection, 114
- User default parameter set, 127
- Wobble function, 122

Alarm code list, 331
Article numbers of inverters, 17

B

Basic functions
- Boost functions, 89
- Braking functions, 93
- Imax controller, 104
- JOG function, 88
- Load torque monitoring, 106
- OFF functions, 85
- PID controller, 91
- Ramp time, 102
- Vdc controller, 105

BI
- P0731[0...2], 218
- P0732[0...2], 218
- P0733[0...2], 218
- P0734[0...2], 218
- P0806, 224
- P0810, 225
- P0811, 225
- P0820, 225
- P0821, 225
- P0840[0...2], 225
- P0842[0...2], 226
- P0843[0...2], 226
- P0844[0...2], 226
- P0845[0...2], 226
- P0848[0...2], 226
- P0849[0...2], 226
- P0852[0...2], 227
- P0881[0...2], 227
- P0882[0...2], 227
- P0883[0...2], 227
- P1020[0...2], 236
- P1021[0...2], 236
- P1022[0...2], 236
- P1023[0...2], 237
- P1035[0...2], 237
- P1036[0...2], 237
- P1041[0...2], 238
- P1043[0...2], 238
- P1055[0...2], 239
- P1056[0...2], 239
- P1074[0...2], 240
- P1110[0...2], 242
- P1113[0...2], 243
- P1124[0...2], 244
- P1140[0...2], 245
- P1141[0...2], 245
- P1142[0...2], 245
- P1175[0...2], 245
- P1218[0...2], 250
- P1230[0...2], 250
- P2103[0...2], 278
- P2104[0...2], 278
- P2106[0...2], 278
- P2200[0...2], 284
- P2220[0...2], 286
- P2221[0...2], 286
- P2222[0...2], 286
- P2223[0...2], 287
- P2235[0...2], 287
- P2236[0...2], 287
- P2241[0...2], 288
- P2243[0...2], 288
- P2810[0...1], 301
- P2812[0...1], 302
- P2814[0...1], 302

P2816[0...1], 302
P2818[0...1], 302
P2820[0...1], 303
P2822[0...1], 303
P2824[0...1], 303
P2826[0...1], 303
P2828, 304
P2830, 304
P2832, 304
P2834[0...3], 305
P2837[0...3], 305
P2840[0...1], 306
P2843[0...1], 306
P2846[0...1], 306
P2849, 307
P2854, 308
P2859, 308
P2864, 309
P2940, 312
P3351[0...2], 316
P3852[0...2], 318
BO
r0807.0, 224
r1025.0, 237
r2036.0...15, 276
r2037.0...15, 276
r2225.0, 287
r2811.0, 302
r2813.0, 302
r2815.0, 302
r2817.0, 302
r2819.0, 303
r2821.0, 303
r2823.0, 303
r2825.0, 303
r2827.0, 304
r2829.0, 304
r2831.0, 304
r2833.0, 304
r2835.0, 305
r2836.0, 305
r2838.0, 305
r2839.0, 305
r2841.0, 306
r2842.0, 306
r2844.0, 306
r2845.0, 306
r2847.0, 306
r2848.0, 306
r2852.0, 308
r2853.0, 308
r2857.0, 308
r2858.0, 308
r2862.0, 309
r2863.0, 309
r2867.0, 309
r2868.0, 309
r2886.0, 312
r2888.0, 312
Built-in BOP
button functions, 52
operating modes Hand/Jog/Auto, 52
screen displays, 58
status icons, 53
status LEDs, 59

C

CDS
P0700[0...2], 212
P0701[0...2], 213
P0702[0...2], 214
P0703[0...2], 214
P0704[0...2], 214
P0705[0...2], 214
P0706[0...2], 214
P0712[0...2], 214
P0713[0...2], 214
P0719[0...2], 215
P0727[0...2], 216
P0731[0...2], 218
P0732[0...2], 218
P0733[0...2], 218
P0734[0...2], 218
P0840[0...2], 225
P0842[0...2], 226
P0843[0...2], 226
P0844[0...2], 226
P0845[0...2], 226
P0848[0...2], 226
P0849[0...2], 226
P0852[0...2], 227
P0881[0...2], 227
P0882[0...2], 227
P0883[0...2], 227
P0886[0...2], 227
P1000[0...2], 233
P1020[0...2], 236
P1021[0...2], 236
P1022[0...2], 236
P1023[0...2], 237
P1035[0...2], 237
P1036[0...2], 237
P1041[0...2], 238

P1042[0...2], 238
P1043[0...2], 238
P1044[0...2], 238
P1055[0...2], 239
P1056[0...2], 239
P1070[0...2], 240
P1071[0...2], 240
P1074[0...2], 240
P1075[0...2], 240
P1076[0...2], 240
P1110[0...2], 242
P1113[0...2], 243
P1124[0...2], 244
P1140[0...2], 245
P1141[0...2], 245
P1142[0...2], 245
P1175[0...2], 245
P1218[0...2], 250
P1230[0...2], 250
P1330[0...2], 258
P2103[0...2], 278
P2104[0...2], 278
P2106[0...2], 278
P2200[0...2], 284
P2220[0...2], 286
P2221[0...2], 286
P2222[0...2], 286
P2223[0...2], 287
P2235[0...2], 287
P2236[0...2], 287
P2241[0...2], 288
P2242[0...2], 288
P2243[0...2], 288
P2244[0...2], 288
P2253[0...2], 289
P2254[0...2], 289
P2264[0...2], 290
P2803[0...2], 301
P3351[0...2], 316
P3852[0...2], 318
CI
P0095[0...9], 197
P0771[0], 222
P1042[0...2], 238
P1044[0...2], 238
P1070[0...2], 240
P1071[0...2], 240
P1075[0...2], 240
P1076[0...2], 240
P1330[0...2], 258
P2019[0...7], 273
P2151[0...2], 280
P2242[0...2], 288
P2244[0...2], 288
P2253[0...2], 289
P2254[0...2], 289
P2264[0...2], 290
P2869[0...1], 309
P2871[0...1], 310
P2873[0...1], 310
P2875[0...1], 310
P2877[0...1], 310
P2879[0...1], 310
P2881[0...1], 311
P2883[0...1], 311
P2885[0...1], 311
P2887[0...1], 312
Clone saved parameter settings, 346
CO
P2378, 297
P2889, 312
P2890, 312
r0020, 191
r0021, 191
r0024, 191
r0025, 191
r0026[0], 191
r0027, 191
r0028, 191
r0031, 191
r0032, 191
r0035[0...2], 192
r0036, 192
r0037[0...1], 192
r0038, 192
r0039, 192
r0051[0...1], 193
r0066, 196
r0067, 196
r0068, 196
r0069[0...5], 196
r0070, 196
r0071, 196
r0072, 196
r0074, 196
r0078, 197
r0080, 197
r0084, 197
r0085, 197
r0086, 197
r0087, 197
r0395, 209
r0512, 210
r0623[0...2], 211

r0630[0...2], 212
r0631[0...2], 212
r0632[0...2], 212
r0633[0...2], 212
r0755[0...1], 220
r0947[0...63], 228
r0949[0...63], 229
r0954[0...2], 229
r0956[0...2], 230
r0957[0...2], 230
r0958[0...2], 230
r1024, 237
r1045, 239
r1050, 239
r1078, 240
r1079, 240
r1114, 243
r1119, 243
r1170, 245
r1242, 253
r1246[0...2], 253
r1315, 257
r1337, 259
r1343, 261
r1344, 261
r1801[0...1], 262
r2018[0...7], 271
r2110[0...3], 278
r2224, 287
r2245, 289
r2250, 289
r2260, 290
r2262, 290
r2266, 290
r2272, 291
r2273, 291
r2294, 292
r2870, 309
r2872, 310
r2874, 310
r2876, 310
r2878, 310
r2880, 311
r2882, 311
r2884, 311
r2955, 313
r3237.0...1, 314
CO/BO, 190
r0019.0...14, 190
r0050, 193
r0052.0...15, 193
r0053.0...15, 194
r0054.0...15, 194
r0055.0...15, 195
r0056.0...15, 195
r0722.0...12, 215
r0747.0...1, 219
r0751.0...9, 219
r0785.0, 223
r0955[0...2], 230
r1199.7...12, 246
r2067.0...12, 277
r2197.0...12, 283
r2198.0...12, 284
r2349, 292
r2379.0...2, 298
r2399, 299
r3113.0...15, 313
r3365, 318
Communication
MODBUS communication, 173
USS communication, 169
Connecting
EMC-compliant cabinet design, 48
EMC-compliant installation, 45
terminal layout, 39
typical system connections, 34
wiring diagram, 37

D

DDS
P0291[0...2], 202
P0301[0...2], 203
P0304[0...2], 203
P0305[0...2], 204
P0307[0...2], 204
P0308[0...2], 204
P0309[0...2], 205
P0310[0...2], 205
P0311[0...2], 205
P0314[0...2], 205
P0320[0...2], 205
P0335[0...2], 206
P0340[0...2], 206
P0341[0...2], 207
P0342[0...2], 207
P0344[0...2], 207
P0346[0...2], 207
P0347[0...2], 208
P0350[0...2], 208
P0352[0...2], 208
P0354[0...2], 208
P0356[0...2], 208

P0358[0...2], 208
P0360[0...2], 208
P0604[0...2], 210
P0610[0...2], 211
P0622[0...2], 211
P0625[0...2], 211
P0626[0...2], 212
P0627[0...2], 212
P0628[0...2], 212
P0640[0...2], 212
P1001[0...2], 234
P1002[0...2], 235
P1003[0...2], 235
P1004[0...2], 235
P1005[0...2], 235
P1006[0...2], 235
P1007[0...2], 235
P1008[0...2], 235
P1009[0...2], 235
P1010[0...2], 236
P1011[0...2], 236
P1012[0...2], 236
P1013[0...2], 236
P1014[0...2], 236
P1015[0...2], 236
P1016[0...2], 236
P1031[0...2], 237
P1040[0...2], 238
P1047[0...2], 239
P1048[0...2], 239
P1058[0...2], 239
P1060[0...2], 239
P1061[0...2], 240
P1080[0...2], 241
P1082[0...2], 241
P1091[0...2], 242
P1092[0...2], 242
P1093[0...2], 242
P1094[0...2], 242
P1101[0...2], 242
P1120[0...2], 243
P1121[0...2], 243
P1130[0...2], 244
P1131[0...2], 244
P1132[0...2], 244
P1133[0...2], 244
P1134[0...2], 244
P1135[0...2], 245
P1138[0...2], 245
P1139[0...2], 245
P1202[0...2], 247
P1227[0...2], 250
P1232[0...2], 250
P1233[0...2], 250
P1234[0...2], 251
P1236[0...2], 251
P1240[0...2], 252
P1243[0...2], 253
P1245[0...2], 253
P1247[0...2], 253
P1250[0...2], 253
P1251[0...2], 253
P1252[0...2], 253
P1253[0...2], 253
P1256[0...2], 254
P1257[0...2], 254
P1300[0...2], 254
P1310[0...2], 256
P1311[0...2], 257
P1312[0...2], 257
P1316[0...2], 257
P1320[0...2], 258
P1321[0...2], 258
P1322[0...2], 258
P1323[0...2], 258
P1324[0...2], 258
P1325[0...2], 258
P1333[0...2], 258
P1334[0...2], 259
P1335[0...2], 259
P1336[0...2], 259
P1338[0...2], 260
P1340[0...2], 260
P1341[0...2], 260
P1345[0...2], 261
P1346[0...2], 261
P1350[0...2], 261
P1780[0...2], 262
P1800[0...2], 262
P1803[0...2], 262
P1810, 263
P1820[0...2, 263
P1909[0...2], 263
P2000[0...2], 265
P2001[0...2], 266
P2002[0...2], 266
P2003[0...2], 267
P2004[0...2], 267
P2150[0...2], 280
P2151[0...2], 280
P2155[0...2], 280
P2156[0...2], 280
P2157[0...2], 280
P2158[0...2], 280

P2159[0...2], 280
P2160[0...2], 280
P2162[0...2], 280
P2164[0...2], 280
P2166[0...2], 280
P2167[0...2], 281
P2168[0...2], 281
P2170[0...2], 281
P2171[0...2], 281
P2172[0...2], 281
P2173[0...2], 281
P2177[0...2], 281
P2181[0...2], 282
P2182[0...2], 282
P2183[0...2], 282
P2184[0...2], 282
P2185[0...2], 283
P2186[0...2], 283
P2187[0...2], 283
P2188[0...2], 283
P2189[0...2], 283
P2190[0...2], 283
P2192[0...2], 283
P2201[0...2], 285
P2202[0...2], 285
P2203[0...2], 285
P2204[0...2], 285
P2205[0...2], 285
P2206[0...2], 285
P2207[0...2], 285
P2208[0...2], 285
P2209[0...2], 286
P2210[0...2], 286
P2211[0...2], 286
P2212[0...2], 286
P2213[0...2], 286
P2214[0...2], 286
P2215[0...2], 286
P2216[0...2], 286
P2231[0...2], 287
P2240[0...2], 288
P2247[0...2], 289
P2248[0...2], 289
P2360[0...2], 294
P2361[0...2], 294
P2362[0...2], 294
P2365[0...2], 294
P2366[0...2], 295
P2367[0...2], 295
P2370[0...2], 295
P2371[0...2], 295
P2372[0...2], 296
P2373[0...2], 296
P2374[0...2], 296
P2375[0...2], 297
P2376[0...2], 297
P2377[0...2], 297
P2378[0...2], 297
P3853[0...2], 318
P3854[0...2], 319
r0035[0...2], 192
r0313[0...2], 205
r0330[0...2], 205
r0331[0...2], 205
r0332[0...2], 206
r0333[0...2], 206
r0345[0...2], 207
r0370[0...2], 209
r0372[0...2], 209
r0373[0...2], 209
r0374[0...2], 209
r0376[0...2], 209
r0377[0...2], 209
r0382[0...2], 209
r0384[0...2], 209
r0386[0...2], 209
r0623[0...2], 211
r0630[0...2], 212
r0631[0...2], 212
r0632[0...2], 212
r0633[0...2], 212
r1246[0...2], 253

F

Fault code list, 324

G

General license conditions, 395

I

Inverter functions, 83
Inverter menu structure
  50/60 Hz selection menu, 60
  Display menu, 55
  Main menu, 53
  Parameter menu, 53, 80
  Setup menu, 63
  Setup menu: application macros sub-menu,
  Setup menu: common parameters sub-menu,

Setup menu: connection macros sub-menu,
Setup menu: motor data sub-menu,
Inverter status at fault, 324

L

List of modified parameters, 84

M

Macros
application macros, 76
connection macros, 65
Mounting
cabinet panel mounting, 22
push-through mounting, 27
Mounting orientation and clearance, 21

O

Options
BOP Interface Module, 352
braking resistor, 358
DIN rail mounting kit, 383
dynamic braking module, 355
external BOP, 350
external line filter, 372
I/O Extension Module, 389
line reactor, 363
memory card, 381
migration mounting kit, 383
output choke, 368
Parameter Loader, 346
residual current circuit breaker (RCCB), 382
RS485 termination resistor, 381
shield connection kit, 377
SINAMICS V20 Smart Access, 386
user documentation, 390

P

Parameter resets, 133
Parameters
access levels, 186
BICO parameters, 184
C, C(1), C(30),U, T, 187
data set, 183
Digit-by-digit editing, 57
Normal editing of parameters, 56
Parameter types, 56
scaling, 187
Product maintenance, 4

Q

Quick commissioning
through the parameter menu, 79
through the setup menu, 62

R

Replacement fans, 390

T

Technical support, 4
Text menu
for common parameters, 78
for motor parameters, 64

U

Use of third-party products, 4
User documentation components, 3

Siemens AG
Digital Factory
Motion Control
P.O. Box 3180
91050 Erlangen
Germany

Scan the QR code for product information