SIEMENS

SIMATIC

Programming with STEP 7

Function Manual

04/2017
A5E41552389-AA

Preface

Introducing the Product and Installing the Software 1

Installation 2

Working Out the Automation Concept 3

Basics of Designing a Program Structure 4

Startup and Operation 5

Setting Up and Editing the Project 6

Editing Projects with Different Versions of STEP 7 7

Defining Symbols 8

Creating Blocks and Libraries 9

Basics of Creating Logic Blocks 10

Creating Data Blocks 11

Parameter Assignment for Data Blocks 12

Creating STL Source Files 13

Displaying Reference Data 14

Checking Block Consistency and Time Stamps as a Block Property 15

Continued on next page

Siemens AG
Division Digital Factory
Postfach 48 48
90026 NÜRNBERG
GERMANY

A5E41552389-AA
Ⓟ 04/2017 Subject to change

Copyright © Siemens AG 2017.
All rights reserved

SIEMENS

SIMATIC

Programming with STEP 7

Function Manual

Continued

Configuring Messages 16

Controlling and Monitoring Variables 17

Establishing an Online Connection and Making CPU Settings 18

Downloading and Uploading 19

Testing with the Variable Table 20

Testing Using Program Status 21

Testing using the Simulation Program (Optional Package) 22

Diagnostics 23

Printing and Archiving 24

Tips and Tricks 25

Appendix 26

04/2017

A5E41552389-AA

Legal information

Warning notice system

This manual contains notices you have to observe in order to ensure your personal safety, as well as to prevent damage to property. The notices referring to your personal safety are highlighted in the manual by a safety alert symbol, notices referring only to property damage have no safety alert symbol. These notices shown below are graded according to the degree of danger.

⚠DANGER

indicates that death or severe personal injury **will** result if proper precautions are not taken.

⚠WARNING

indicates that death or severe personal injury **may** result if proper precautions are not taken.

⚠CAUTION

indicates that minor personal injury can result if proper precautions are not taken.

NOTICE

indicates that property damage can result if proper precautions are not taken.

If more than one degree of danger is present, the warning notice representing the highest degree of danger will be used. A notice warning of injury to persons with a safety alert symbol may also include a warning relating to property damage.

Qualified Personnel

The product/system described in this documentation may be operated only by **personnel qualified** for the specific task in accordance with the relevant documentation, in particular its warning notices and safety instructions. Qualified personnel are those who, based on their training and experience, are capable of identifying risks and avoiding potential hazards when working with these products/systems.

Proper use of Siemens products

Note the following:

⚠WARNING

Siemens products may only be used for the applications described in the catalog and in the relevant technical documentation. If products and components from other manufacturers are used, these must be recommended or approved by Siemens. Proper transport, storage, installation, assembly, commissioning, operation and maintenance are required to ensure that the products operate safely and without any problems. The permissible ambient conditions must be complied with. The information in the relevant documentation must be observed.

Trademarks

All names identified by ® are registered trademarks of Siemens AG. The remaining trademarks in this publication may be trademarks whose use by third parties for their own purposes could violate the rights of the owner.

Disclaimer of Liability

We have reviewed the contents of this publication to ensure consistency with the hardware and software described. Since variance cannot be precluded entirely, we cannot guarantee full consistency. However, the information in this publication is reviewed regularly and any necessary corrections are included in subsequent editions.

Siemens AG
Division Digital Factory
Postfach 48 48
90026 NÜRNBERG
GERMANY

A5E41552389-AA
℗ 04/2017 Subject to change

Copyright © Siemens AG 2017.
All rights reserved

Preface

Purpose

This manual provides a complete overview of programming with **STEP 7**. It is designed to support you when installing and commissioning the software. It explains how to proceed when creating programs and describes the components of user programs.

The manual is intended for people who are involved in carrying out control tasks using STEP 7 and SIMATIC S7 automation systems.

We recommend that you familiarize yourself with the examples in the manual "Working with STEP 7 V5.5, Getting Started." These examples provide an easy introduction to the topic "Programming with STEP 7".

Basic Knowledge Required

In order to understand this manual, general knowledge of automation technology is required. In addition, you must be familiar with using computers or PC-similar tools (for example, programming devices) with the MS Windows XP, MS Windows Server 2003 or MS Windows 7 operating system.

Scope of the Manual

This manual is valid for release 5.6 of the STEP 7 programming software package.

You can find the latest information on the service packs:

- in the "readme.rtf" file
- in the updated STEP 7 online help.

The topic "What's new?" in the online help offers an excellent introduction and overview of the newest STEP 7 innovations.

Online Help

The manual is complemented by an online help which is integrated in the software.

This online help is intended to provide you with detailed support when using the software.

The help system is integrated in the software via a number of interfaces:

- There are several menu commands which you can select in the **Help** menu:

The **Contents** command opens the index for the Help on STEP 7.

- **Using Help** provides detailed instructions on using the online help.

The context-sensitive help offers information on the current context, for example, an open dialog box or an active window. You can open the contextsensitive help by clicking the "Help" button or by pressing F1.

- The status bar offers another form of context-sensitive help. It displays a short explanation for each menu command when the mouse pointer is positioned on the menu command.
- A brief explanation is also displayed for each icon in the toolbar when the mouse pointer is positioned on the icon for a short time.

If you prefer to read the information from the online help in printed format, you can print out individual help topics, books, or the entire online help.

This manual, as well as the manuals "Configuring Hardware and Communication Connections STEP 7", "Modifiying the System During Operation via CiR" and "Automation System S7-400H - Fault-Tolerant Systems" is an extract from the HTML-based Help on STEP 7. For detailed procedures please refer to the STEP 7 help. As the manuals and the online help share an almost identical structure, it is easy to switch between the manuals and the online help.

You can find the electronic manuals after installing STEP 7 via the Windows Start menu: **Start > SIMATIC > Documentation.**

Further Support

If you have any technical questions, please get in touch with your Siemens representative or responsible agent.

You will find your contact person at:

http://www.siemens.com/automation/partner

You will find a guide to the technical documentation offered for the individual SIMATIC Products and Systems at:

http://www.siemens.com/simatic-tech-doku-portal

The online catalog and order system is found under:

http://mall.automation.siemens.com/

Training Centers

Siemens offers a number of training courses to familiarize you with the SIMATIC S7 automation system. Please contact your regional training center or our central training center in D 90026 Nuremberg, Germany for details:

Internet: http://www.sitrain.com

Technical Support

You can reach the Technical Support for all Industry Automation and Drive Technology products

- Via the Web formula for the Support Request

http://www.siemens.com/automation/support-request Additional information about our Technical Support can be found on the Internet pages http://www.siemens.com/automation/service

Service & Support on the Internet

In addition to our documentation, we offer our Know-how online on the internet at:

http://www.siemens.com/automation/service&support

where you will find the following:

- The newsletter, which constantly provides you with up-to-date information on your products.
- The right documents via our Search function in Service & Support.
- A forum, where users and experts from all over the world exchange their experiences.
- Your local representative for Industry Automation and Drive Technology.
- Information on field service, repairs, spare parts and consulting.

Security Information:

Siemens provides products and solutions with industrial security functions that support the secure operation of plants, systems, machines and networks.

In order to protect plants, systems, machines and networks against cyber threats, it is necessary to implement - and continuously maintain - a holistic, state-of-the-art industrial security concept. Siemens' products and solutions only form one element of such a concept.

Customer is responsible to prevent unauthorized access to its plants, systems, machines and networks. Systems, machines and components should only be connected to the enterprise network or the internet if and to the extent necessary and with appropriate security measures (e.g. use of firewalls and network segmentation) in place.

Additionally, Siemens' guidance on appropriate security measures should be taken into account. For more information about industrial security, please visit

http://www.siemens.com/industrialsecurity.

Siemens' products and solutions undergo continuous development to make them more secure. Siemens strongly recommends to apply product updates as soon as available and to always use the latest product versions. Use of product versions that are no longer supported, and failure to apply latest updates may increase customer's exposure to cyber threats.

To stay informed about product updates, subscribe to the Siemens Industrial Security RSS Feed under

http://www.siemens.com/industrialsecurity.

Table of Contents

Preface **5**

Table of Content **9**

1 Introducing the Product and Installing the Software **21**
1.1 Overview of STEP 7 21
1.2 The STEP 7 Standard Package 25
1.3 What's New in STEP 7, Version 5.6? 30
1.4 Extended Uses of the STEP 7 Standard Package 31
1.4.1 Engineering Tools 32
1.4.2 Run-Time Software 34
1.4.3 Human Machine Interface 35

2 Installation **37**
2.1 Automation License Manager 37
2.1.1 User Rights Through The Automation License Manager 37
2.1.2 Installing the Automation License Manager 40
2.1.3 Guidelines for Handling License Keys 41
2.2 Installing STEP 7 42
2.2.1 Installation Procedure 44
2.2.2 Setting the PG/PC Interface 46
2.3 Uninstalling STEP 7 48
2.4 User Rights 48

3 Working Out the Automation Concept **51**
3.1 Basic Procedure for Planning an Automation Project 51
3.2 Dividing the Process into Tasks and Areas 52
3.3 Describing the Individual Functional Areas 54
3.4 Listing Inputs, Outputs, and In/Outs 56
3.5 Creating an I/O Diagram for the Motors 56
3.6 Creating an I/O Diagram for the Valves 57
3.7 Establishing the Safety Requirements 58
3.8 Describing the Required Operator Displays and Controls 59
3.9 Creating a Configuration Diagram 60

4 Basics of Designing a Program Structure **61**
4.1 Programs in a CPU 61
4.2 Blocks in the User Program 62
4.2.1 Organization Blocks and Program Structure 63
4.2.2 Call Hierarchy in the User Program 69
4.2.3 Block Types 71
4.2.3.1 Organization Block for Cyclic Program Processing (OB1) 71
4.2.3.2 Functions (FC) 77
4.2.3.3 Function Blocks (FB) 79
4.2.3.4 Instance Data Blocks 82
4.2.3.5 Shared Data Blocks (DB) 85
4.2.3.6 System Function Blocks (SFB) and System Functions (SFC) 86
4.2.4 Organization Blocks for Interrupt-Driven Program Processing 88
4.2.4.1 Time-of-Day Interrupt Organization Blocks (OB10 to OB17) 88
4.2.4.2 Time-Delay Interrupt Organization Blocks (OB20 to OB23) 91
4.2.4.3 Cyclic Interrupt Organization Blocks (OB30 to OB38) 92
4.2.4.4 Hardware Interrupt Organization Blocks (OB40 to OB47) 94
4.2.4.5 Startup Organization Blocks (OB100 / OB101 / OB102) 95
4.2.4.6 Background Organization Block (OB90) 97
4.2.4.7 Error Handling Organization Blocks (OB70 to OB87 / OB121 to OB122) 99

5 Startup and Operation 101
5.1 Starting STEP 7 101
5.2 Starting STEP 7 with Default Start Parameters 102
5.3 Calling the Help Functions 104
5.4 Objects and Object Hierarchy 105
5.4.1 Project Object 107
5.4.2 Library Object 108
5.4.3 Station Object 109
5.4.4 Programmable Module Object 110
5.4.5 S7 Program Object 112
5.4.6 Block Folder Object 114
5.4.7 Source File Folder Object 117
5.4.8 S7 Program without a Station or CPU 118
5.5 User Interface and Operation 119
5.5.1 Operating Philosophy 119
5.5.2 Window Arrangement 120
5.5.3 Elements in Dialog Boxes 121
5.5.4 Creating and Managing Objects 122
5.5.5 Selecting Objects in a Dialog Box 128
5.5.6 Session Memory 129
5.5.7 Changing the Window Arrangement 129
5.5.8 Saving and Restoring the Window Arrangement 130
5.6 Keyboard Operation 131
5.6.1 Keyboard Control 131
5.6.2 Key Combinations for Menu Commands 131
5.6.3 Key Combinations for Moving the Cursor 133
5.6.4 Key Combinations for Selecting Text 135
5.6.5 Key Combinations for Access to Online Help 135
5.6.6 Key Combinations for Toggling between Windows 136

6 Setting Up and Editing the Project 137
6.1 Project Structure 137
6.2 What You Should Know About Access Protection 139
6.3 What You Should Know About The Change Log 141
6.4 Using Foreign-Language Character Sets 142
6.5 Setting the MS Windows Language 144
6.6 Setting Up a Project 145
6.6.1 Creating a Project 145
6.6.2 Inserting Stations 147
6.6.3 Inserting an S7 Program 148
6.7 Editing a Project 150
6.7.1 Checking Projects for Software Packages Used 150
6.7.2 Managing Multilingual Texts 151
6.7.2.1 Types of Multilingual Texts 153
6.7.2.2 Structure of the Export File 154
6.7.2.3 Information on the Log File 156
6.7.2.4 Managing User Texts Whose Language Font is Not Installed 157
6.7.2.5 Optimizing the Source for Translation 158
6.7.2.6 Optimizing the Translation Process 159
6.7.2.7 Hiding Texts in Selected Languages 159
6.7.3 Micro Memory Card (MMC) as a Data Carrier 160
6.7.3.1 What You Should Know About Micro Memory Cards (MMC) 160
6.7.3.2 Using a Micro Memory Card as a Data Carrier 161
6.7.3.3 Memory Card File 161
6.7.3.4 Storing Project Data on a Micro Memory Card (MMC) 162

7 Editing Projects with Different Versions of STEP 7 163
7.1 Editing Version 2 Projects and Libraries 163
7.2 Expanding DP Slaves That Were Created with Previous Versions of STEP 7 163
7.3 Editing Current Configurations with Previous Versions of STEP 7 165
7.4 Appending SIMATIC PC Configurations of Previous Versions 166
7.5 Displaying Modules Configured with Later STEP 7 Versions or Optional Packages 168

8 Defining Symbols 171
8.1 Absolute and Symbolic Addressing 171
8.2 Shared and Local Symbols 173
8.3 Displaying Shared or Local Symbols 174
8.4 Setting the Address Priority (Symbolic/Absolute) 175
8.5 Symbol Table for Shared Symbols 178
8.5.1 Structure and Components of the Symbol Table 178
8.5.2 Addresses and Data Types Permitted in the Symbol Table 180
8.5.3 Incomplete and Non-Unique Symbols in the Symbol Table 181
8.6 Entering Shared Symbols 182
8.6.1 General Tips on Entering Symbols 182
8.6.2 Entering Single Shared Symbols in a Dialog Box 183
8.6.3 Entering Multiple Shared Symbols in the Symbol Table 184
8.6.4 Using Upper and Lower Case for Symbols 185
8.6.5 Exporting and Importing Symbol Tables 187
8.6.6 File Formats for Importing/Exporting a Symbol Table 188
8.6.7 Editing Areas in Symbol Tables 191

9 Creating Blocks and Libraries 193
9.1 Selecting an Editing Method 193
9.2 Selecting the Programming Language 194
9.2.1 Ladder Logic Programming Language (LAD) 196
9.2.2 Function Block Diagram Programming Language (FBD) 197
9.2.3 Statement List Programming Language (STL) 198
9.2.4 S7 SCL Programming Language 199
9.2.5 S7-GRAPH Programming Language (Sequential Control) 200
9.2.6 S7 HiGraph Programming Language (State Graph) 201
9.2.7 S7 CFC Programming Language 202
9.3 Creating Blocks 203
9.3.1 Blocks Folder 203
9.3.2 Using User-Defined Data Types to Access Data 204
9.3.3 Block Properties 207
9.3.4 Displaying Block Lengths 209
9.3.5 Rewiring 210
9.3.6 Comparing Blocks 211
9.3.7 Attributes for Blocks and Parameters 213
9.4 Working with Libraries 214
9.4.1 Hierarchical Structure of Libraries 216
9.4.2 Overview of the Standard Libraries 216

10 Basics of Creating Logic Blocks 217
10.1 Basics of Creating Logic Blocks 217
10.1.1 Structure of the Program Editor Window 217
10.1.2 Basic Procedure for Creating Logic Blocks 219
10.1.3 Default Settings for the LAD/STL/FBD Program Editor 220
10.1.4 Access Rights to Blocks and Source Files 220
10.1.5 Instructions from the Program Elements Table 221
10.2 Editing the Variable Declaration 222
10.2.1 Using the Variable Declaration in Logic Blocks 222
10.2.2 Interaction Between The Variable Detail View And The Instruction List 224
10.2.3 Structure of the Variable Declaration Window 225
10.3 Multiple Instances in the Variable Declaration 226

10.3.1 Using Multiple Instances 226
10.3.2 Rules for Declaring Multiple Instances 227
10.3.3 Entering a Multiple Instance in the Variable Declaration Window 227
10.4 General Notes on Entering Statements and Comments 228
10.4.1 Structure of the Code Section 228
10.4.2 Procedure for Entering Statements 229
10.4.3 Entering Shared Symbols in a Program 230
10.4.4 Entering Block Comments and Network Comments 230
10.4.5 Title and Comments for Blocks and Networks 231
10.4.6 Working with Network Templates 233
10.4.7 Search Function for Errors in the Code Section 234
10.5 Editing LAD Elements in the Code Section 235
10.5.1 Settings for Ladder Logic Programming 235
10.5.2 Rules for Entering Ladder Logic Elements 235
10.5.3 Illegal Logic Operations in Ladder 238
10.6 Editing FBD Elements in the Code Section 239
10.6.1 Settings for Function Block Diagram Programming 239
10.6.2 Rules for Entering FBD Elements 240
10.7 Editing STL Statements in the Code Section 242
10.7.1 Settings for Statement List Programming 242
10.7.2 Rules for Entering STL Statements 242
10.8 Updating Block Calls 243
10.8.1 Changing Interfaces 243
10.9 Saving Logic Blocks 244

11 Creating Data Blocks 247
11.1 Basic Information on Creating Data Blocks 247
11.2 Declaration View of Data Blocks 248
11.3 Data View of Data Blocks 249
11.4 Editing and Saving Data Blocks 250
11.4.1 Entering the Data Structure of Shared Data Blocks 250
11.4.2 Entering and Displaying the Data Structure of Data Blocks Referencing an FB (Instance DBs) 251
11.4.3 Entering the Data Structure of User-Defined Data Types (UDT) 252
11.4.4 Entering and Displaying the Structure of Data Blocks Referencing a UDT 253
11.4.5 Editing Data Values in the Data View 254
11.4.6 Resetting Data Values to their Initial Values 254
11.4.7 Saving Data Blocks 255

12 Parameter Assignment for Data Blocks 257
12.1 Assigning Parameters to Technological Functions 257

13 Creating STL Source Files 259
13.1 Basic Information on Programming in STL Source Files 259
13.2 Rules for Programming in STL Source Files 260
13.2.1 Rules for Entering Statements in STL Source Files 260
13.2.2 Rules for Declaring Variables in STL Source Files 261
13.2.3 Rules for Block Order in STL Source Files 262
13.2.4 Rules for Setting System Attributes in STL Source Files 262
13.2.5 Rules for Setting Block Properties in STL Source Files 263
13.2.6 Permitted Block Properties for Each Block Type 264
13.3 Structure of Blocks in STL Source Files 266
13.3.1 Structure of Logic Blocks in STL Source Files 266
13.3.2 Structure of Data Blocks in STL Source Files 267
13.3.3 Structure of User-Defined Data Types in STL Source Files 267
13.4 Syntax and Formats for Blocks in STL Source Files 268
13.4.1 Format Table of Organization Blocks 268
13.4.2 Format Table of Function Blocks 269
13.4.3 Format Table of Functions 270
13.4.4 Format Table of Data Blocks 271

13.5 Creating STL Source Files 272
13.5.1 Creating STL Source Files 272
13.5.2 Editing S7 Source Files 272
13.5.3 Setting The Layout of Source Code Text 272
13.5.4 Inserting Block Templates in STL Source Files 273
13.5.5 Inserting the Contents of Other STL Source Files 273
13.5.6 Inserting Source Code from Existing Blocks in STL Source Files 273
13.5.7 Inserting External Source Files 273
13.5.8 Generating STL Source Files from Blocks 274
13.5.9 Importing Source Files 275
13.5.10 Exporting Source Files 275
13.6 Saving and Compiling STL Source Files and Executing a Consistency Check 276
13.6.1 Saving STL Source Files 276
13.6.2 Checking Consistency in STL Source Files 276
13.6.3 Debugging STL Source Files 276
13.6.4 Compiling STL Source Files 277
13.7 Examples of STL Source Files 277
13.7.1 Examples of Declaring Variables in STL Source Files 277
13.7.2 Example of Organization Blocks in STL Source Files 278
13.7.3 Example of Functions in STL Source Files 279
13.7.4 Example of Function Blocks in STL Source Files 282
13.7.5 Example of Data Blocks in STL Source Files 284
13.7.6 Example of User-Defined Data Types in STL Source Files 285

14 Displaying Reference Data 287
14.1 Overview of the Available Reference Data 287
14.1.1 Cross-Reference List 289
14.1.2 Program Structure 290
14.1.3 Assignment List 292
14.1.4 Unused Symbols 294
14.1.5 Addresses Without Symbols 295
14.1.6 Displaying Block Information for LAD, FBD, and STL 295
14.2 Working with Reference Data 296
14.2.1 Ways of Displaying Reference Data 296
14.2.2 Displaying Lists in Additional Working Windows 297
14.2.3 Generating and Displaying Reference Data 298
14.2.4 Finding Address Locations in the Program Quickly 299
14.2.5 Example of Working with Address Locations 300

15 Checking Block Consistency and Time Stamps as a Block Property 303
15.1 Checking Block Consistency 303
15.2 Time Stamps as a Block Property and Time Stamp Conflicts 305
15.3 Time Stamps in Logic Blocks 306
15.4 Time Stamps in Shared Data Blocks 307
15.5 Time Stamps in Instance Data Blocks 307
15.6 Time Stamps in UDTs and Data Blocks Derived from UDTs 308
15.7 Correcting the Interfaces in a Function, Function Block, or UDT 308
15.8 Avoiding Errors when Calling Blocks 309

16 Configuring Messages 311
16.1 The Message Concept 311
16.1.1 What Are the Different Messaging Methods? 311
16.1.2 Choosing a Messaging Method 313
16.1.3 SIMATIC Components 315
16.1.4 Parts of a Message 316
16.1.5 Which Message Blocks Are Available? 317
16.1.6 Formal Parameters, System Attributes, and Message Blocks 319
16.1.7 Message Type and Messages 320
16.1.8 How to Generate an STL Source File from Message-Type Blocks 322
16.1.9 Assigning Message Numbers 322

16.1.10 Differences Between Project-Oriented and CPU-Oriented Assignment of Message Numbers 323
16.1.11 Options for Modifying the Message Number Assignment of a Project 324
16.2 Project-Oriented Message Configuration 325
16.2.1 How to Assign Project-Oriented Message Numbers 325
16.2.2 Assigning and Editing Block-Related Messages 325
16.2.2.1 How to Create Block-Related Messages (Project-Oriented) 325
16.2.2.2 How to Edit Block-Related Messages (Project-Oriented) 328
16.2.2.3 How to Configure PCS 7 Messages (Project-Oriented) 329
16.2.3 Assigning and Editing Symbol-Related Messages 330
16.2.3.1 How to Assign and Edit Symbol-Related Messages (Project-Oriented) 330
16.2.4 Creating and Editing User-Defined Diagnostic Messages 331
16.3 CPU-Oriented Message Configuration 332
16.3.1 How to Assign CPU-Oriented Message Numbers 332
16.3.2 Assigning and Editing Block-Related Messages 332
16.3.2.1 How to Create Block-Related Messages (CPU-Oriented) 332
16.3.2.2 How to Edit Block-Related Messages (CPU-Oriented) 335
16.3.2.3 How to Configure PCS 7 Messages (CPU-Oriented) 335
16.3.3 Assigning and Editing Symbol-Related Messages 337
16.3.3.1 How to Assign and Edit Symbol-Related Messages (CPU-Oriented) 337
16.3.4 Creating and Editing User-Defined Diagnostic Messages 338
16.4 Tips for Editing Messages 339
16.4.1 Adding Associated Values to Messages 339
16.4.2 Integrating Texts from Text Libraries into Messages 342
16.4.3 Deleting Associated Values 343
16.5 Translating and Editing Operator Related Texts 344
16.5.1 Translating and Editing User Texts 344
16.6 Translating and Editing Text Libraries 346
16.6.1 User Text Libraries 346
16.6.2 Creating User Text Libraries 346
16.6.3 How to Edit User Text Libraries 347
16.6.4 System Text Libraries 347
16.6.5 Translating Text Libraries 348
16.7 Transferring Message Configuration Data to the Programmable Controller 350
16.7.1 Transferring Configuration Data to the Programmable Controller 350
16.8 Displaying CPU Messages and User-Defined Diagnostic Messages 351
16.8.1 Configuring CPU Messages 354
16.8.2 Displaying Stored CPU Messages 354
16.9 Configuring the 'Report System Errors' 355
16.9.1 Overview of 'Report System Error' 355
16.9.2 Configuring the Reporting of System Errors 355
16.9.3 Supported Components and Functional Scope 357
16.9.4 Settings for "Report System Error" 361
16.9.5 Generating Blocks for Reporting System Errors 361
16.9.6 Generated Error OBs 363
16.9.7 Generated Blocks 365
16.9.8 Assignment of System Errors to Error Classes 367
16.9.9 Generating Foreign-Language Message Texts in 'Report System Error' 369

17 Controlling and Monitoring Variables 371
17.1 Configuring Variables for Operator Control and Monitoring 371
17.2 Configuring Operator Control and Monitoring Attributes with Statement List, Ladder Logic, and Function Block Diagram 373
17.3 Configuring Operator Control and Monitoring Attributes via the Symbol Table 374
17.4 Changing Operator Control and Monitoring Attributes with CFC 375
17.5 Transferring Configuration Data to the Operator Interface Programmable Controller 376

18 Establishing an Online Connection and Making CPU Settings 377
18.1 Establishing Online Connections 377
18.1.1 Establishing an Online Connection via the "Accessible Nodes" Window 377
18.1.2 Establishing an Online Connection via the Online Window of the Project 379
18.1.3 Online Access to PLCs in a Multiproject 380
18.1.4 Password Protection for Access to Programmable Controllers 382
18.1.5 Updating the Window Contents 383
18.2 Displaying and Changing the Operating Mode 384
18.3 Displaying and Setting the Time and Date 385
18.3.1 CPU Clocks with Time Zone Setting and Summer/Winter Time 386
18.4 Updating the Firmware 388
18.4.1 Updating Firmware in Modules and Submodules Online 388

19 Downloading and Uploading 393
19.1 Downloading from the PG/PC to the Programmable Controller 393
19.1.1 Requirements for Downloading 393
19.1.2 Differences Between Saving and Downloading Blocks 394
19.1.3 Load Memory and Work Memory in the CPU 395
19.1.4 Download Methods Dependent on the Load Memory 397
19.1.5 Updating Firmware in Modules and Submodules Online 398
19.1.6 Downloading a Program to the S7 CPU 401
19.1.6.1 Downloading with Project Management 401
19.1.6.2 Downloading without Project Management 401
19.1.6.3 Reloading Blocks in the Programmable Controller 401
19.1.6.4 Saving Downloaded Blocks on Integrated EPROM 402
19.1.6.5 Downloading via EPROM Memory Cards 402
19.2 Compiling and Downloading Several Objects from the PG 403
19.2.1 Requirements for and Notes on Downloading 403
19.2.2 Compiling and Downloading Objects 405
19.3 Uploading from the Programmable Controller to the PG/PC 407
19.3.1 Uploading a Station 408
19.3.2 Uploading Blocks from an S7 CPU 409
19.3.3 Editing Uploaded Blocks in the PG/PC 409
19.3.3.1 Editing Uploaded Blocks if the User Program is on the PG/PC 410
19.3.3.2 Editing Uploaded Blocks if the User Program is Not on the PG/PC 410
19.4 Deleting on the Programmable Controller 411
19.4.1 Erasing the Load/Work Memory and Resetting the CPU 411
19.4.2 Deleting S7 Blocks on the Programmable Controller 411
19.5 Compressing the User Memory (RAM) 412
19.5.1 Gaps in the User Memory (RAM) 412
19.5.2 Compressing the Memory Contents of an S7 CPU 413

20 Testing with the Variable Table 415
20.1 Introduction to Testing with Variable Tables 415
20.2 Basic Procedure when Monitoring and Modifying with the Variable Table 416
20.3 Editing and Saving Variable Tables 416
20.3.1 Creating and Opening a Variable Table 416
20.3.1.1 How to Create and Open a Variable Table 417
20.3.2 Copying/Moving Variable Tables 418
20.3.3 Saving a Variable Table 418
20.4 Entering Variables in Variable Table 419
20.4.1 Inserting Addresses or Symbols in a Variable Table 419
20.4.2 Inserting a Contiguous Address Range in a Variable Table 421
20.4.3 Inserting Modify Values 421
20.4.4 Upper Limits for Entering Timers 422
20.4.5 Upper Limits for Entering Counters 423
20.4.6 Inserting Comment Lines 423

20.4.7 Examples 424
20.4.7.1 Example of Entering Addresses in Variable Tables 424
20.4.7.2 Example of Entering a Contiguous Address Range 425
20.4.7.3 Examples of Entering Modify and Force Values 426
20.5 Establishing a Connection to the CPU 429
20.6 Monitoring Variables 430
20.6.1 Introduction to Monitoring Variables 430
20.6.2 Defining the Trigger for Monitoring Variables 430
20.7 Modifying Variables 432
20.7.1 Introduction to Modifying Variables 432
20.7.2 Defining the Trigger for Modifying Variables 433
20.8 Forcing Variables 435
20.8.1 Safety Measures When Forcing Variables 435
20.8.2 Introduction to Forcing Variables 436
20.8.3 Differences Between Forcing and Modifying Variables 438

21 Testing Using Program Status 439
21.1 Testing Using Program Status 439
21.2 Program Status Display 440
21.3 What You Should Know About Testing in Single-Step Mode/Breakpoints 442
21.4 What You Should Know About the HOLD Mode 444
21.5 Program Status of Data Blocks 445
21.5.1 Setting the Display for Program Status 446

22 Testing using the Simulation Program (Optional Package) 447
22.1 Testing using the Simulation Program S7 PLCSIM (Optional Package) 447

23 Diagnostics 449
23.1 Hardware Diagnostics and Troubleshooting 449
23.2 Diagnostics Symbols in the Online View 451
23.3 Diagnosing Hardware: Quick View 453
23.3.1 Calling the Quick View 453
23.3.2 Information Functions in the Quick View 453
23.4 Diagnosing Hardware: Diagnostic View 454
23.4.1 Calling the Diagnostic View 454
23.4.2 Information Functions in the Diagnostic View 456
23.5 Module Information 457
23.5.1 Options for Displaying the Module Information 457
23.5.2 Module Information Functions 458
23.5.3 Scope of the Module Type-Dependent Information 461
23.5.4 Displaying the Module Status of PA Field Devices and DP Slaves After a Y-Link 463
23.6 Diagnosing in STOP Mode 465
23.6.1 Basic Procedure for Determining the Cause of a STOP 465
23.6.2 Stack Contents in STOP Mode 466
23.7 Checking Scan Cycle Times to Avoid Time Errors 467
23.7.1 Checking Scan Cycle Times to Avoid Time Errors 467
23.8 Flow of Diagnostic Information 468
23.8.1 System Status List SSL 469
23.8.2 Sending Your Own Diagnostic Messages 471
23.8.3 Diagnostic Functions 472
23.9 Program Measures for Handling Errors 473
23.9.1 Evaluating the Output Parameter RET_VAL 474
23.9.2 Error OBs as a Reaction to Detected Errors 475
23.9.3 Inserting Substitute Values for Error Detection 480
23.9.4 I/O Redundancy Error (OB70) 482
23.9.5 CPU Redundancy Error (OB72) 483
23.9.6 Time Error (OB80) 484
23.9.7 Power Supply Error (OB81) 485
23.9.8 Diagnostic Interrupt (OB82) 486
23.9.9 Insert/Remove Module Interrupt (OB83) 487

23.9.10 CPU Hardware Fault (OB84) 488
23.9.11 Program Sequence Error (OB85) 489
23.9.12 Rack Failure (OB86) 490
23.9.13 Communication Error (OB87) 491
23.9.14 Programming Error (OB121) 491
23.9.15 I/O Access Error (OB122) 492
23.10 System Diagnostics with 'Report System Error' 493
23.10.1 Graphical Output of Diagnostic Events 493
23.10.2 Diagnostic Status 493
23.10.2.1 Overview of the Diagnostic Status 493
23.10.2.2 PROFIBUS Diagnostic Status 493
23.10.2.3 Example of a DB 125 with a DP Slave 496
23.10.2.4 Example of a Request for the PROFIBUS DP DB 497
23.10.2.5 PROFINET Diagnostic Status 499
23.10.2.6 Example of a DB126 with an IO System 100 and Devices with Device Numbers 2, 3 and 4 ... 502
23.10.2.7 Example of a Request for the PROFINET IO DB 503
23.10.2.8 Diagnostic Status DB 504
23.10.2.9 Example of a Diagnostic Status DB Query 508
23.10.2.10 Importing Error and Help Texts 511

24 Printing and Archiving 513
24.1 Printing Project Documentation 513
24.1.1 Basic Procedure when Printing 514
24.1.2 Print Functions 514
24.1.3 Special Note on Printing the Object Tree 515
24.2 Archiving Projects and Libraries 516
24.2.1 Archiving Projects and Libraries 516
24.2.2 Uses for Saving/Archiving 517
24.2.3 Requirements for Archiving 517
24.2.4 Procedure for Archiving/Retrieving 518

25 Tips and Tricks 519
25.1 Exchanging Modules in the Configuration Table 519
25.2 Projects with a Large Number of Networked Stations 519
25.3 Rearranging 520
25.4 Editing Symbols Across Multiple Networks 520
25.5 Testing with the Variable Table 521
25.6 Modifying Variables With the Program Editor 522
25.7 Virtual Work Memory 523

26 Appendix 525
26.1 Operating Modes 525
26.1.1 Operating Modes and Mode Transitions 525
26.1.2 STOP Mode 528
26.1.3 STARTUP Mode 529
26.1.4 RUN Mode 537
26.1.5 HOLD Mode 538
26.2 Memory Areas of S7 CPUs 539
26.2.1 Distribution of the Memory Areas 539
26.2.2 Load Memory and Work Memory 540
26.2.3 System Memory 542
26.2.3.1 Using the System Memory Areas 542
26.2.3.2 Process-Image Input/Output Tables 544
26.2.3.3 Local Data Stack 548
26.2.3.4 Interrupt Stack 550
26.2.3.5 Block Stack 550
26.2.3.6 Diagnostic Buffer 551
26.2.3.7 Evaluating the Diagnostic Buffer 551
26.2.3.8 Retentive Memory Areas on S7-300 CPUs 553
26.2.3.9 Retentive Memory Areas on S7-400 CPUs 554

26.2.3.10 Configurable Memory Objects in the Work Memory 554
26.3 Data Types and Parameter Types 555
26.3.1 Introduction to Data Types and Parameter Types 555
26.3.2 Elementary Data Types 556
26.3.2.1 Format of the Data Type INT (16-Bit Integers) 557
26.3.2.2 Format of the Data Type DINT (32-Bit Integers) 557
26.3.2.3 Format of the Data Type REAL (Floating-Point Numbers) 558
26.3.2.4 Format of the Data Types WORD and DWORD in Binary Coded Decimal Numbers 562
26.3.2.5 Format of the Data Type S5TIME (Time Duration) 563
26.3.3 Complex Data Types 564
26.3.3.1 Format of the Data Type DATE_AND_TIME 565
26.3.3.2 Using Complex Data Types 567
26.3.3.3 Using Arrays to Access Data 568
26.3.3.4 Using Structures to Access Data 571
26.3.4 Parameter Types 573
26.3.4.1 Format of the Parameter Types BLOCK, COUNTER, TIMER 574
26.3.4.2 Format of the Parameter Type POINTER 574
26.3.4.3 Using the Parameter Type POINTER 576
26.3.4.4 Block for Changing the Pointer 578
26.3.4.5 Format of the Parameter Type ANY 581
26.3.4.6 Using the Parameter Type ANY 584
26.3.4.7 Assigning Data Types to Local Data of Logic Blocks 587
26.3.4.8 Permitted Data Types when Transferring Parameters 589
26.3.4.9 Transferring to IN_OUT Parameters of a Function Block 594
26.4 Working with Older Projects 595
26.4.1 Converting Version 2 Projects 595
26.5 Expanding DP Slaves That Were Created with Previous Versions of STEP 7 596
26.5.1 DP-Slaves with Missing or Faulty GSD Files 597
26.6 Sample Programs 598
26.6.1 Sample Projects and Sample Programs 598
26.6.2 Sample Program for an Industrial Blending Process 600
26.6.2.1 Defining Logic Blocks 603
26.6.2.2 Assigning Symbolic Names 604
26.6.2.3 Creating the FB for the Motor 606
26.6.2.4 Creating the FC for the Valves 611
26.6.2.5 Creating OB1 613
26.6.3 Example of Handling Time-of-Day Interrupts 619
26.6.3.1 Structure of the User Program "Time-of-Day Interrupts" 619
26.6.3.2 FC12 621
26.6.3.3 OB10 623
26.6.3.4 OB1 and OB80 625
26.6.4 Example of Handling Time-Delay Interrupts 627
26.6.4.1 Structure of the User Program "Time-Delay Interrupts" 627
26.6.4.2 OB20 629
26.6.4.3 OB1 631
26.6.4.4 Example of Masking and Unmasking Synchronous Errors 633
26.6.4.5 Example of Disabling and Enabling Interrupts and Asynchronous Errors (SFC39 and SFC40) 637
26.6.4.6 Example of the Delayed Processing of Interrupts and Asynchronous Errors (SFC41 and SFC42) 638

26.7 Accessing Process and I/O Data Areas 639
26.7.1 Accessing the Process Data Area 639
26.7.2 Accessing the Peripheral Data Area 641
26.8 Setting the Operating Behavior 643
26.8.1 Setting the Operating Behavior 643
26.8.2 Changing the Behavior and Properties of Modules 644
26.8.3 Updating the Firmware (of the Operating System) in Modules and Submodules Offline 646
26.8.4 Using the Clock Functions 647
26.8.5 Using Clock Memory and Timers 648

Index 649

1 Introducing the Product and Installing the Software

1.1 Overview of STEP 7

What is STEP 7?

STEP 7 is the standard software package used for configuring and programming SIMATIC programmable logic controllers. It is part of the SIMATIC industry software. There are the following versions of the STEP 7 Standard package:

- STEP 7 Micro/DOS and STEP 7 Micro/Win for simpler stand-alone applications on the SIMATIC S7-200.
- STEP 7 for applications on SIMATIC S7-300/S7-400 with a wider range of functions:
  - Can be extended as an option by the software products in the SIMATIC Industry Software (see also Extended Uses of the STEP 7 Standard Package)
  - Opportunity of assigning parameters to function modules and communications processors
  - Forcing and multicomputing mode
  - Global data communication
  - Event-driven data transfer using communication function blocks
  - Configuring connections

STEP 7 is the subject of this documentation, STEP 7 Micro is described in the "STEP 7 Micro/DOS" documentation.

Basic Tasks

When you create an automation solution with STEP 7, there are a series of basic tasks. The following figure shows the tasks that need to be performed for most projects and assigns them to a basic procedure. It refers you to the relevant chapter thus giving you the opportunity of moving through the manual to find task-related information.

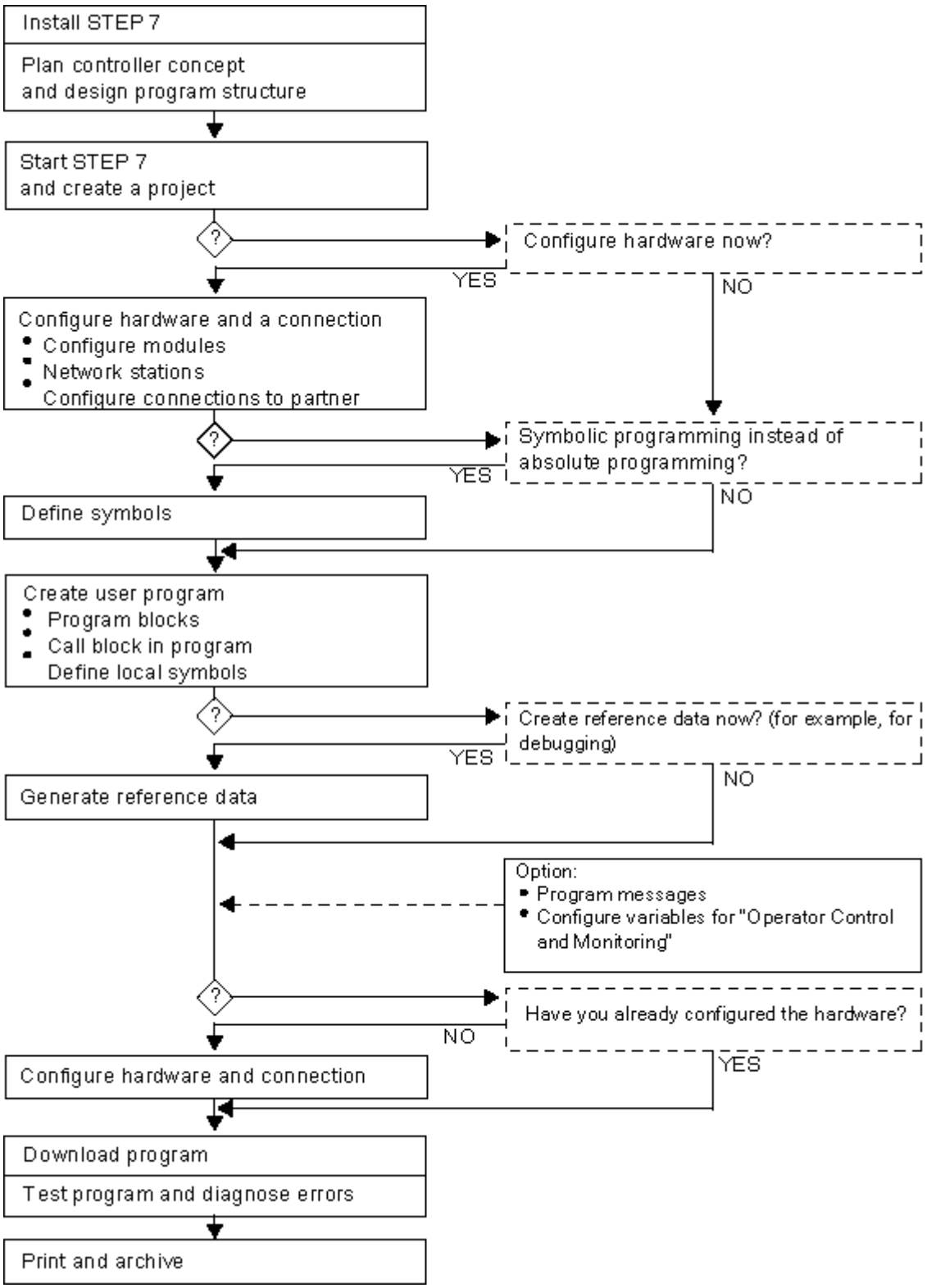

Alternative Procedures

As shown in the figure above, you have two alternative procedures:

- You can configure the hardware first and then program the blocks.
- You can, however, program the blocks first without configuring the hardware. This is recommended for service and maintenance work, for example, to integrate programmed blocks into in an existing project.

Brief Description of the Individual Steps

- Install STEP 7 and license keys
  The first time you use STEP 7, install it and transfer the license keys from diskette to the hard disk (see also Installing STEP 7 and Authorization).
- Plan your controller
  Before you work with STEP 7, plan your automation solution from dividing the process into individual tasks to creating a configuration diagram (see also Basic Procedure for Planning an Automation Project).
- Design the program structure
  Turn the tasks described in the draft of your controller design into a program structure using the blocks available in STEP 7 (see also Blocks in the User Program).
- Start STEP 7
  You start STEP 7 from the Windows user interface (see also Starting STEP 7).
- Create a project structure
  A project is like a folder in which all data are stored in a hierarchical structure and are available to you at any time. After you have created a project, all other tasks are executed in this project (see also Project Structure).
- Configure a station
  When you configure the station you specify the programmable controller you want to use; for example, SIMATIC 300, SIMATIC 400, SIMATIC S5 (see also Inserting Stations).
- Configure hardware
  When you configure the hardware you specify in a configuration table which modules you want to use for your automation solution and which addresses are to be used to access the modules from the user program. The properties of the modules can also be assigned using parameters (see also Basic Procedure for Configuring Hardware) .
- Configure networks and communication connections
  The basis for communication is a pre-configured network. For this, you will need to create the subnets required for your automation networks, set the subnet properties, and set the network connection properties and any communication connections required for the networked stations (see also Procedure for Configuring a Subnet).
- Define symbols
  You can define local or shared symbols, which have more descriptive names, in a symbol table to use instead of absolute addresses in your user program (see also Creating a Symbol Table).
- Create the program
  Using one of the available programming languages create a program linked to a module or independent of a module and store it as blocks, source files, or charts (see also Basic Procedure for Creating Logic Blocks and Basic Information on Programming in STL Source Files).
- S7 only: generate and evaluate reference data
  You can make use of these reference data to make debugging and modifying your user program easier (see also Overview of the Available Reference Data).

- Configure messages
  You create block-related messages, for example, with their texts and attributes. Using the transfer program you transfer the message configuration data created to the operator interface system database (for example, SIMATIC WinCC, SIMATIC ProTool), see also Configuring Messages.
- Configure operator control and monitoring variables
  You create operator control and monitoring variables once in STEP 7 and assign them the required attributes. Using the transfer program you transfer the operator control and monitoring variables created to the database of the operator interface system WinCC (see also Configuring Variables for Operator Control and Monitoring).
- Download programs to the programmable controller
  After all configuration, parameter assignment, and programming tasks are completed, you can download your entire user program or individual blocks from it to the programmable controller (programmable module for your hardware solution). (See also Requirements for Downloading.) The CPU already contains the operating system.
- Test programs
  For testing you can either display the values of variables from your user program or a CPU, assign values to the variables, or create a variable table for the variables that you want to display or modify (see also Introduction to Testing with the Variable Table).
- Monitor operation, diagnose hardware
  You determine the cause of a module fault by displaying online information about a module. You determine the causes for errors in user program processing with the help of the diagnostic buffer and the stack contents. You can also check whether a user program can run on a particular CPU (see also Hardware Diagnostics and Displaying Module Information).
- Document the plant
  After you have created a project/plant, it makes sense to produce clear documentation of the project data to make further editing of the project and any service activities easier (see also Printing Project Documentation). DOCPRO, the optional tool for creating and managing plant documentation, allows you to structure the project data, put it into wiring manual form, and print it out in a common format.

Specialized Topics

When you create an automation solution there are a number of special topics that may be of interest to you:

- Multicomputing - Synchronous Operation of Several CPUs (see also Multicomputing - Synchronous Operation of Several CPUs)
- More than One User Working in a Project (see also More than One User Editing Projects)

1.2 The STEP 7 Standard Package

Standards Used

The SIMATIC programming languages integrated in STEP 7 are compliant with EN 61131-3. The standard package matches the graphic and object oriented operating philosophy of Windows and runs under the operating systems MS Windows 7 Ultimate, Professional und Enterprise (64-bit), MS Windows 10 Pro and Enterprise (64-bit) as well as MS Windows Server 2008 R2 SP1, 2012 R2 und 2016 (each 64-bit).

Functions of the standard package

The standard software supports you in all phases of the creation process of an automation task, such as:

- Setting up and managing projects
- Configuring and assigning parameters to hardware and communications
- Managing symbols
- Creating programs, for example, for S7 programmable controllers
- Downloading programs to programmable controllers
- Testing the automation system
- Diagnosing plant failures

The STEP 7 software user interface has been designed to meet the latest state-of-the-art ergonomics and makes it easy for you to get started.

The documentation for the STEP 7 software product provides all the information online in the online Help and in electronic manuals in PDF format.

Applications in STEP 7

The STEP 7 Standard package provides a series of applications (tools) within the software:

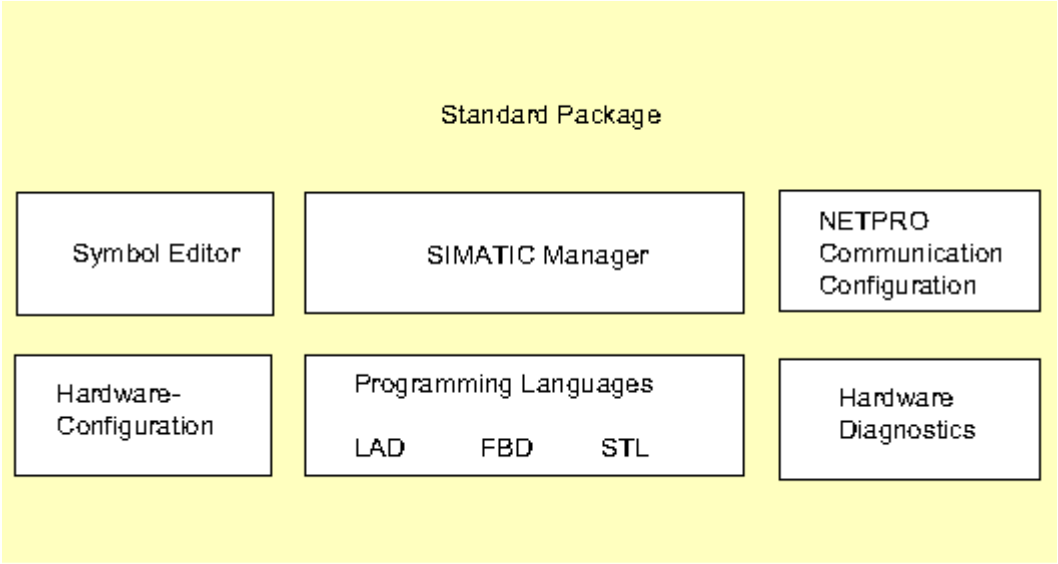

You do not need to open the tools separately; they are started automatically when you select the corresponding function or open an object.

SIMATIC Manager

The SIMATIC Manager manages all the data that belong to an automation project. The tools needed to edit the selected data are started automatically by the SIMATIC Manager.

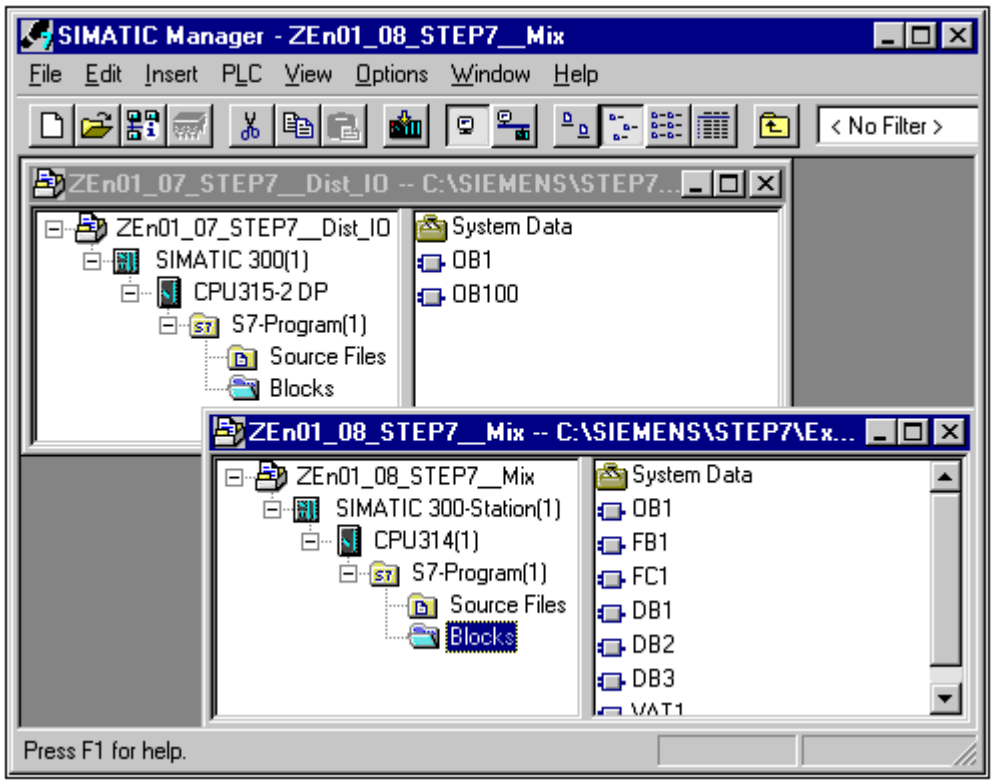

Symbol Editor

With the Symbol Editor you manage all the shared symbols. The following functions are available:

- Setting symbolic names and comments for the process signals (inputs/outputs), bit memory, and blocks
- Sort functions
- Import/export to/from other Windows programs

The symbol table created with this tool is available to all the other tools. Any changes to the properties of a symbol are therefore recognized automatically by all tools.

Diagnosing Hardware

These functions provide you with an overview of the status of the programmable controller. An overview can display symbols to show whether every module has a fault or not. A double-click on the faulty module displays detailed information about the fault. The scope of this information depends on the individual module:

- Display general information about the module (for example, order number, version, name) and the status of the module (for example, faulty)
- Display the module faults (for example, channel fault) for the central I/O and DP slaves
- Display messages from the diagnostic buffer

For CPUs the following additional information is displayed:

- Causes of faults in the processing of a user program
- Display the cycle duration (of the longest, shortest, and last cycle)
- MPI communication possibilities and load
- Display performance data (number of possible inputs/outputs, bit memory, counters, timers, and blocks)

Programming Languages

The programming languages Ladder Logic, Statement List, and Function Block Diagram for S7-300 and S7-400 are an integral part of the standard package.

- Ladder Logic (or LAD) is a graphic representation of the STEP 7 programming language. Its syntax for the instructions is similar to a relay ladder logic diagram: Ladder allows you to track the power flow between power rails as it passes through various contacts, complex elements, and output coils.
- Statement List (or STL) is a textual representation of the STEP 7 programming language, similar to machine code. If a program is written in Statement List, the individual instructions correspond to the steps with which the CPU executes the program. To make programming easier, Statement List has been extended to include some high-level language constructions (such as structured data access and block parameters).
- Function Block Diagram (FBD) is a graphic representation of the STEP 7 programming language and uses the logic boxes familiar from Boolean algebra to represent the logic. Complex functions (for example, math functions) can be represented directly in conjunction with the logic boxes.

Other programming languages are available as optional packages.

Hardware Configuration

You use this tool to configure and assign parameters to the hardware of an automation project. The following functions are available:

- To configure the programmable controller you select racks from an electronic catalog and arrange the selected modules in the required slots in the racks.
- Configuring the distributed I/O is identical to the configuration of the central I/O.
- In the course of assigning parameters to the CPU you can set properties such as startup behavior and scan cycle time monitoring guided by menus. Multicomputing is supported. The data entered are stored in system data blocks.
- In the course of assigning parameters to the modules, all the parameters you can set are set using dialog boxes. There are no settings to be made using DIP switches. The assignment of parameters to the modules is done automatically during startup of the CPU. This means, for example, that a module can be exchanged without assigning new parameters.
- Assigning parameters to function modules (FMs) and communications processors (CPs) is also done within the Hardware Configuration tool in exactly the same way as for the other modules. Module-specific dialog boxes and rules exist for every FM and CP (included in the scope of the FM/CP function package). The system prevents incorrect entries by only offering valid options in the dialog boxes.

NetPro (Network Configuration)

Using NetPro time-driven cyclic data transfer via the MPI is possible where you:

- Select the communication nodes
- Enter the data source and data target in a table; all blocks (SDBs) to be downloaded are generated automatically and completely downloaded to all CPUs automatically

Event-driven data transfer is also possible where you:

- Set the communication connections
- Select the communication or function blocks from the integrated block library
- Assign parameters to the selected communication or function blocks in your chosen programming language

1.3 What's New in STEP 7, Version 5.6?

The following subject areas have been updated:

- Operating Systems
- Configuring and Diagnosing Hardware
- System Diagnostics
- SIMATIC_Manager
- Checking Block Consistency

Operating systems

- The operating systems MS Windows 10 Pro and Enterprise MS Windows Server 2012 and MS Windows Server 2016 are supported as of STEP 7 V5.6. You can find more detailed information on this in the accompanying file "Readme.rtf".

Configuring and Diagnosing Hardware

- As of STEP 7 V5.6, you can update the firmware for CPUs 410 as of V8.2 in two separate steps. You can find more detailed information on this under Online Update of the Firmware for Modules.

System Diagnostics

- As of STEP 7 V5.6, you can read out security events for CPU 410-5H as of firmware version V8.2 and save them on your PG/PC via the "Save Security Events" dialog box.
- In STEP 7 V5.6, the "Process Objects" tab of the module status is renamed to "SEC" (SEC means System Expansion Card.), and further properties are dsplayed for the license status.

SIMATIC Manager

- As of STEP 7 V5.6, the number of selected objects is shown in the status bar.

Checking Block Consistency

- As of STEP 7 V5.6, you can perform an extended consistency check with symbolic addressing. You can find more detailed information on this in the help for block consistency under the entry "Extended consistency check".

1.4 Extended Uses of the STEP 7 Standard Package

The standard package can be extended by optional software packages that are grouped into the following three software classes:

- Engineering Tools;
  these are higher-level programming languages and technology-oriented software.
- Run-Time Software;
  these contain off-the-shelf run-time software for the production process.
- Human Machine Interfaces (HMI);
  this is software especially for operator control and monitoring.

The following table shows the optional software you can use depending on your programmable control system:

	S7-300 **S7-400**
Engineering Tools	
• Borland C/C++	
• CFC	+[1)]
• DOCPRO	+
• HARDPRO	+
• S7-GRAPH	+[1)]
• S7-HiGraph	+
• S7-PDIAG	+
• S7-PLCSIM	+
• S7-SCL	+
• TeleService	+
Runtime Software	
• Fuzzy Control	+
• Modular PID Control	+
• • PRODAVE MPI	+
• PC-DDE-Server	+
• Standard PID Control	+
Human Machine Interface	
• ProAgent	
• SIMATIC ProTool	
• SIMATIC ProTool/Lite	
• SIMATIC WinCC	
o = absolutely required + = optional [1)] = recommended as of S7-400	

1.4.1 Engineering Tools

Engineering Tools are task-oriented tools that can be used to extend the standard package. Engineering Tools include:

- High-level languages for programmers
- Graphic languages for technical staff
- Supplementary software for diagnostics, simulation, remote maintenance, plant documentation etc.

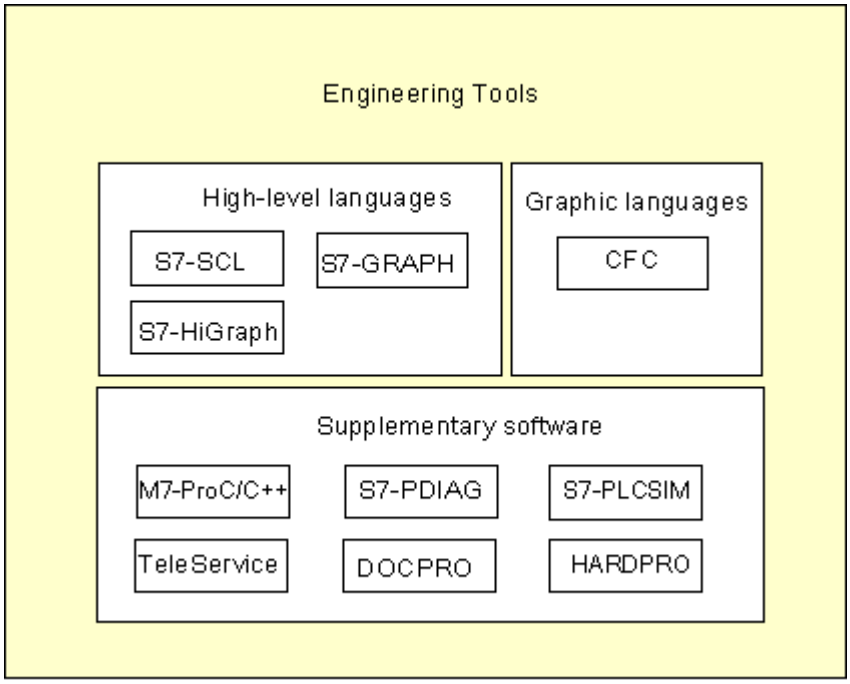

High-Level Languages

The following languages are available as optional packages for use in programming the SIMATIC S7-300/S7-400 programmable logic controllers:

- S7 GRAPH is a programming language used to program sequential controls (steps and transitions). In this language, the process sequence is divided into steps. The steps contain actions to control the outputs. The transition from one step to another is controlled by switching conditions.
- S7 HiGraph is a programming language used to describe asynchronous, non-sequential processes in the form of state graphs. To do this, the plant is broken down into individual functional units which can each take on different states. The functional units can be synchronized by exchanging messages between the graphs.
- S7 SCL is a high-level text-based language to EN 61131-3 (IEC 1131-3). It contains language constructs similar to those found in the programming languages C and Pascal. S7 SCL is therefore particularly suitable for users familiar with high-level language programming. S7 SCL can be used, for example, to program complex or frequently recurring functions.

Graphic Language

CFC for S7 is a programming language for interconnecting functions graphically. These functions cover a wide range of simple logic operations through to complex controls and control circuits. A large number of such function blocks are available in the form of blocks in a library. You program by copying the blocks into a chart and interconnecting the blocks with connecting lines.

Supplementary Software

- With DOCPRO you can organize all configuration data created under STEP 7 into wiring manuals. These wiring manuals make it easy to manage the configuration data and allow the information to be prepared for printing according to specific standards.
- HARDPRO is the hardware configuration system for S7-300 with user support for large-scale configuration of complex automation tasks.
- You can use S7 PLCSIM (S7 only) to simulate S7 programmable controllers connected to the programming device or PC for purposes of testing.
- S7 PDIAG (S7 only) allows standardized configuration of process diagnostics for SIMATIC S7-300/S7-400. Process diagnostics let you detect faults and faulty states of PLC I/O (for example, limit switch not reached).
- TeleService is a solution providing functions for online programming and servicing of remote S7 PLCs via the telecommunications network with your PG/PC.

1.4.2 Run-Time Software

Runtime software provides ready-to-use solutions you can call in user program and is directly implemented in the automation solution. It includes:

- Controllers for SIMATIC S7, for example, standard, modular and fuzzy logic control
- Tools for linking the programmable controllers with Windows applications

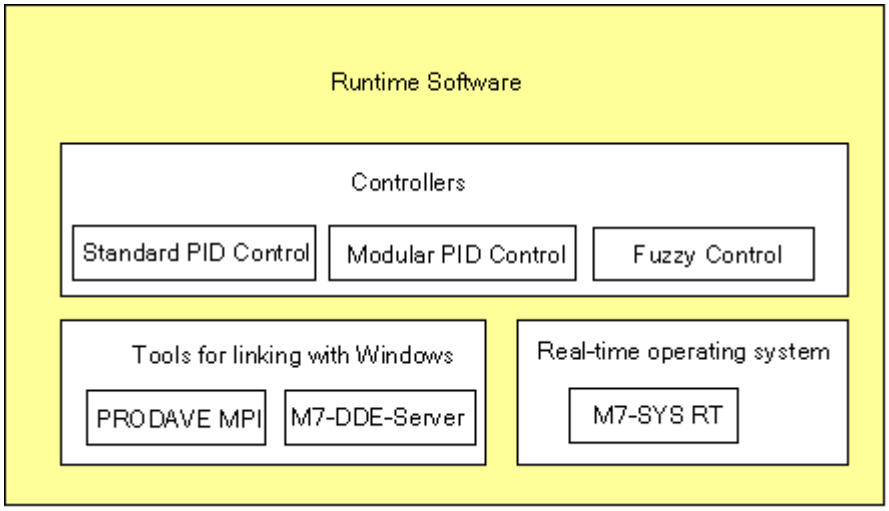

Controllers for SIMATIC S7

- Standard PID Control allows you to integrate closed-loop controllers, pulse controllers, and step controllers into the user program. The parameter assignment tool with integrated controller setting allows you to set the controller up for optimum use in a very short time.
- Modular PID Control comes into play if a simple PID controller is not sufficient to solve your automation task. You can interconnect the included standard function blocks to create almost any controller structure.
- With Fuzzy Control you can create fuzzy logic systems. These systems are used if the mathematical definition of processes is impossible or highly complex, if processes and sequencers do not react as expected, if linearity errors occur and if, on the other hand, information on the process is available.

Tools for Linking with Windows

- PRODAVE MPI is a toolbox for process data traffic between a PC and S7/M7/C7. It automatically controls the data flow across the MPI interface.

1.4.3 Human Machine Interface

Human Machine Interface (HMI) is a software especially designed for operator control and monitoring in SIMATIC.

- The open process visualization systems SIMATIC WinCC and SIMATIC WinCC flexible are basic systems that are not restricted to specific industrial sectors or technology and provide all the important operator control and monitoring functions.
- SIMATIC ProTool and SIMATIC ProTool/Lite are modern tools for configuring SIMATIC operator panels (OPs).
- ProAgent is a diagnostics software that acquires information on the location and cause of errors in plants and machinery and thus offers fast and aimed process diagnostics.

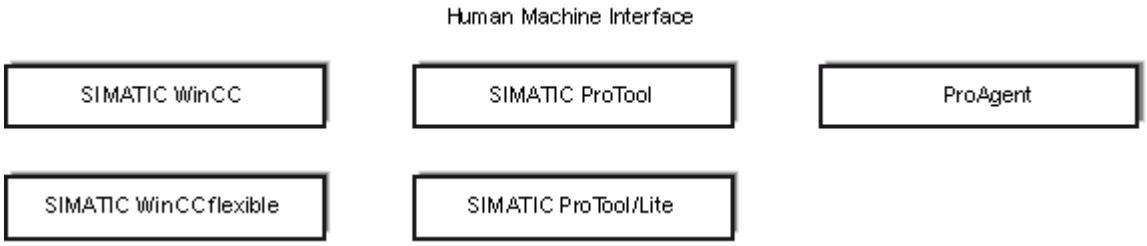

2 Installation

2.1 Automation License Manager

2.1.1 User Rights Through The Automation License Manager

Automation License Manager

To use STEP 7 programming software, you require a product-specific license key (user rights). Starting with STEP 7 V5.3, this key is installed with the Automation License Manager.

The Automation License Manager is a software product from Siemens AG. It is used to manage the license keys (license modules) for all systems.

The Automation License Manager is located in the following places:

- On the installation device for a software product requiring a license key
- On a separate installation device
- As a download from the Internet page of A&D Customer Support at Siemens AG

The Automation License Manager has its own integrated online help. To obtain help after the license manager is installed, press F1 or select the **Help > Help on License Manager**. This online help contains detailed information on the functionality and operation of the Automation License Manager.

Licenses

Licenses are required to use STEP 7 program packages whose legal use is protected by licenses. A license gives the user a legal right to use the product. Evidence of this right is provided by the following:

- The CoL (**C**ertificate **o**f **L**icense), and
- The license key

Certificate of License (CoL)

The "Certificate of License" that is included with a product is the legal evidence that a right to use this product exists. This product may only be used by the owner of the Certificate of License (CoL) or by those persons authorized to do so by the owner.

License Keys

The license key is the technical representation (an electronic "license stamp") of a license to use software.

SIEMENS AG issues a license key for all of its software that is protected by a license. When the computer has been started, such software can only be used in accordance with the applicable license and terms of use after the presence of a valid license key has been verified.

Notes

- You can use the standard software without a license key to familiarize yourself with the user interface and functions.
- However, a license is required and necessary for full, unrestricted use of the STEP 7 software in accordance with the license agreement
- If you have **not** installed the license key, you will be prompted to do so at regular intervals.

License Keys can be stored and transferred among various types of storage devices as follows:

- On license key diskettes or USB memory stick
- On the local hard disk
- On network hard disk

If software products for which no license is available are installed, you can then determine which license key is needed and order it as required.

For further information on obtaining and using license keys, please refer to the online help for the Automation License Manager.

Types of Licenses

The following different types of application-oriented user licenses are available for software products from Siemens AG. The actual behavior of the software is determined by which type license key is installed for it. The type of use can be found on the accompanying Certificate of License.

License Type	Description
Single License	The software can be used on any single computer desired for an unlimited amount of time.
Floating License	The software can be used on a computer network ("remote use") for an unlimited amount of time.
Trial License	The software can be used subject to the following restrictions: • A period of validity of up to a maximum of 14 days, • A total number of operating days after the day of first use, • A use for tests and validation (exemption from liability).
Rental License	The software can be used subject to the following restrictions: • A period of validity of up to a maximum of 50 hours.
Upgrade License	Certain requirements in the existing system may apply with regard to software upgrades: • An upgrade license may be used to convert an "old version X" of the software to a newer version X+. • An upgrade may be necessary due to an increase in the volume of data being handled in the given system.

2.1.2 Installing the Automation License Manager

The Automation License Manager is installed by means of an MSI setup process. The installation software for the Automation License Manager is included on the STEP 7 product DVD.

You can install the Automation License Manager at the same time you install STEP 7 or at a later time.

.

Notes

For detailed information on how to install the Automation License Manager, please refer to the current Readme file

The online help for the Automation License Manager contains all the information you need on the function and handling of License Keys.

Subsequent installation of license keys

If you start the STEP 7 software and no license keys are available, a warning message indicating this condition will be displayed.

Notes

- You can use the standard software without a license key to familiarize yourself with the user interface and functions.
- However, a license is required and necessary for full, unrestricted use of the STEP 7 software in accordance with the license agreement

If you have **not** installed the license key, you will be prompted to do so at regular intervals.

You can subsequently install license keys in the following ways:

- Install license keys from diskettes or USB memory stick
- Install license keys downloaded from the Internet. In this case, the license keys must be ordered first.
- Use floating license keys available in a network

For detailed information on installing license keys, refer to the online help for the Automation License Manager. To access this help, press F1 or select the **Help > Help on License Manager** menu command.

Notes

In Windows XP/Server 2003, license keys will only be operational if they are installed on a local hard disk and have write-access status.

Floating licenses can also be used within a network ("remote" use).

2.1.3 Guidelines for Handling License Keys

Caution

Please note the information on handling license keys that is available in the online help on the Automation License Manager and also in the STEP 7 Readme file on the installation DVD. If you do not follow these guidelines, the license keys may be irretrievably lost.

To access online help for the Automation License Manager, press F1 for context-sensitive help or select the **Help > Help on License Manager** menu command.

This help section contains all the information you need on the function and handling of license keys.

2.2 Installing STEP 7

The STEP 7 Setup program performs an automatic installation. The complete installation procedure is menu controlled. Execute Setup using the standard Windows XP/7/Server 2003 software installation procedure.

The major stages in the installation are:

- Copying the data to your programming device
- Configuration of EPROM and communication drivers
- Installing the license keys (if desired)

Note

Siemens programming devices are shipped with the STEP 7 software on the hard disk ready for installation.

Installation requirements

- Operating system:
  MS Windows 7 Professional and Enterprise (standard installation).
- Basic hardware:
  Programming device or PC with:
- Pentium processor (600 MHz)
- At least 512 MB RAM.
- Color monitor, keyboard and mouse, all of which are supported by Microsoft Windows

A programming device (PG) is a PC with a special compact design for industrial use. It is fully equipped for programming SIMATIC PLCs.

- Hard disk space:
  Refer to the Readme file for information on required hard disk space.
- MPI interface (optional):
  An MPI interface is only required to interconnect the PG/PC and the PLC if you want to use it for communication with the PLC under STEP 7.
  In this case you require:
- A PC USB adapter that is connected to the communications port of your device, or
- An MPI module (for example, CP 5611) that is installed in your device.

PGs are supplied with an MPI interface.

- External prommer (optional)
  An external prommer is only required if you want to program EPROMs with a PC.

Note

Refer to the information on STEP 7 installation in the Readme file and the "List of SIMATIC Software Packages compatible to the versions of the standard STEP 7 software package."

The readme file and the compatibility list is found, for example under MS Windows 7 via the Start menu, under **Start > All Programs > Siemens Automation > Documentation.**

2.2.1 Installation Procedure

Starting the Installation Program

To install the software, proceed as follows:

1. Insert the DVD and double click on the file "SETUP.EXE".
2. Follow the on-screen step-by-step instructions of the installation program.

The program guides you through all steps of the installation. You can go to the next step or return to the previous step.

During installation, the dialog boxes prompt you to make your choice from the displayed options. The following notes will help you to quickly and easily find the right answers.

If a Version of STEP 7 Is Already Installed...

If Setup detects another version of STEP 7 on the programming device, a corresponding message is displayed. You can then choose to:

- Abort the installation (so that you can uninstall the old STEP 7 version under Windows and then restart Setup, or
- Continue Setup and overwrite the previous version.

For well organized software management you should always uninstall any older versions before installing the new version. the disadvantage of overwriting previous versions with a new version is that when you subsequently uninstall the old software version some components of the old version may not be removed.

Selecting the Installation Options

You have three was to select the scope of the installation:

- Standard setup: all dialog languages for the user interface, all applications, and all examples. Refer to the current Product Information for information on memory space required for this type of configuration.
- Basic setup: only one dialog language, no examples. Refer to the current Product Information for information on memory space required for this type of configuration.
- User-defined ("custom") setup: you can determine the scope of the installation, e.g. the programs, databases, examples, and communication functions.

ID Number

You will be prompted during setup to enter an ID number (found on the Software Product Certificate or on your license key storage medium).

Installing License Keys

During setup, the program checks to see whether a corresponding license key is installed on the hard disk. If no valid license key is found, a message stating that the software can be used only with a license key is displayed. If you want, you can install the license key immediately or continue setup and then install the key later. If you want to install the license key now, insert the authorization diskette or use the A&D license stick when prompted to do so.

PG/PC Interface Settings

During installation, a dialog box is displayed where you can assign parameters to the programming device/PC interface. You will find more information on it in "Setting the PG/PC Interface."

Assigning Parameters to Memory Cards

During installation, a dialog box is displayed where you can assign parameters to Memory Cards.

- You do not need an EPROM driver if you are not using any Memory Cards . Select the option "No EPROM Driver".
- Otherwise, select the entry which applies to your PG.
- If you are using a PC, you can select a driver for an external prommer. Here you must specify the port to which the prommer is connected (for example, LPT1).

You can change the set parameters after installation by calling the program "Memory Card Parameter Assignment" in the STEP 7 program group or in the Control Panel.

Flash-File Systems

In the dialog box for assigning memory card parameters, you can select to install a flash-file system.

The flash-file system is required, for example under SIMATIC M7 when you write individual files to an EPROM memory card without changing other contents of the Memory Card.

If you are using a suitable programming device (PG 720/PG 740/PG 760, Field PG and Power PG) or external prommer and you want to use this function, install the flash-file system.

If Errors Occur during the Installation

Setup may be cancelled due to the following errors:

- If an initialization error occurs immediately after the start of Setup, more than likely *setup* was not started under Windows.
- Insufficient hard disk space: For the basic software, you require approximately 650 MB to 900 MB of free space on your hard disk depending on the scope of your installation.
- Bad DVD: If the DVD is faulty, please contact your local Siemens representative.
- Operator error: Restart *setup* follow the instructions carefully.

After the installation has been completed…

An on-screen message reports the successful installation.

If any changes were made to system files during the installation, you are prompted to restart Windows. After this restart (warm restart) you can start the STEP 7 application, the SIMATIC Manager.

After successful installation, a program group for STEP 7 has been set up.

2.2.2 Setting the PG/PC Interface

Here you configure the communication between the PG/PC and the PLC. During installation, you are displayed a dialog for assigning parameters to the PG/PC interface. You can also open this dialog box after installation, by calling the program "Setting PG/PC Interface" in the STEP 7 program group. This enables you to modify the interface parameters at a later time, independently of the installation.

Basic Procedure

To operate an interface, you will require the following:

- Configurations in the operating system
- A suitable interface configuration

If you are using a PC with an MPI card or communications processors (CP), you should check the interrupt and address assignments in the Windows "Control Panel" to ensure that there are no interrupt conflicts and no address areas overlap.

In Windows 2000, Windows XP and Server 2003, the ISA component MPI-ISA card is no longer supported and therefore no longer offered for installation.

In order to make it easier to assign parameters to the programming device/PC interface, a dialog box will display a selection list of default basic parameter sets (interface configurations).

Assigning Parameters to the PG/PC Interface

Procedure (Detail are found in the Online Help):

1. Double-click on "Setting PG/PC Interface" in the "Control Panel" of Windows.
2. Set the "Access Point of Application" to "S7ONLINE."
3. In the list "Interface parameter set used", select the required interface parameter set. If the required interface parameter set is not displayed, you must first install a module or protocol via the "Select" button. The interface parameter set is then generated automatically. On plug-and-play systems, you can not install plug and play CPs manually (CP 5611 and CP 5511). They are integrated automatically in "Setting PG/PC Interface" after you have installed the hardware in your PG/PC.
   - If you select an interface which is capable of **automatic recognition of bus parameters** (for example, CP 5611 (Auto)), you can connect the programming device or the PC to the MPI or PROFIBUS without having to set bus parameters. If the transmission rate is < 187.5 Kbps, there may be a delay of up to one minute while the bus parameters are read. **Requirement for automatic recognition**: Masters who broadcast bus parameters cyclically are connected to the bus. All new MPI components do this; for PROFIBUS subnets the cyclic broadcast of bus parameters must be enabled (default PROFIBUS network setting).
4. If you select an interface which **does not automatically recognize the bus parameters**, you can display the properties and adapt them to match the subnet.

Changes will also be necessary if conflicts with other settings arise (for example, interrupt or address assignments). In this case, make the appropriate changes with the hardware recognition and Control Panel in Windows (see below).

Caution

Do **not** remove any "TCP/IP" parameters from your interface configuration.

This could cause malfunctioning of other applications.

Checking the Interrupt and Address Assignments

If you use a PC with an MPI card, you should always check whether the default interrupt and the default address area are free.

2.3 Uninstalling STEP 7

Use the standard Windows method to uninstall STEP 7:

1. Double-click on the "Add/Remove Programs" icon in the "Control Panel." to start the Windows software installation dialog box.
2. Select the STEP 7 entry in the displayed list of installed software. Click the button to "Add/Remove" the software.
3. If the "Remove Shared File" dialog box appears, click the "No" button if you are uncertain.

2.4 User Rights

Specifying Access Rights in the Operating System

When you install STEP 7, the user group "Siemens TIA Engineer" is created automatically. This allows the users entered there to configure the PG/PC interface and to install selected Hardware Support Packages. To allow manual IP configuration (for PROFINET without DHCP), the user must also be included in the "Network Configuration Operators" group that is preinstalled by the operating system.

These rights can only be assigned to the user by the administrator.

Including users in the user groups "Siemens TIA Engineer" and "Network Configuration Operators"

Enter the local users who can access STEP 7 with their login in the "Siemens TIA Engineer" group.

Follow the steps below:

1. Open the Control Panel in Windows and select "User Accounts".
2. In the navigation window, select the entry "Manage User Accounts."
3. In the "Advanced" tab, select the "Advanced" entry in the "Advanced User Management" section.
4. In the navigation window, select the entry "Local Users and Groups > Users". All users are displayed in the data window.
5. Using the context menu, open the "New User" and create an account with the same login for every user that needs to access STEP 7.
6. Select the "Properties" context menu command for each user you create.
7. In the dialog box that opens, select the "Member of" and the click the "Add..." button.
8. In the "Select Groups" dialog, enter the user group "Siemens TIA Engineer" in the "Enter the object names to select" box and confirm with "OK".
9. Follow the same procedure for the users to be included in the "Network Configuration Operators" user group.

Creating the global domain user group "Siemens TIA Engineer"

When working in a domain, you have the alternative of creating a global domain user group that is then mapped to the local user groups "Siemens TIA Engineer" and "Network Configuration Operators".

The following requirements must be met first:

- The domain administrator has created a global domain user group.
- The domain administrator has included the users with whose login STEP 7 can be accessed in the global domain user group.

3 Working Out the Automation Concept

3.1 Basic Procedure for Planning an Automation Project

This chapter outlines the basic tasks involved in planning an automation project for a programmable controller (PLC). Based on an example of automating an industrial blending process, you are guided step by step through the procedure.

There are many ways of planning an automation project. The basic procedure that you can use for any project is illustrated in the following figure.

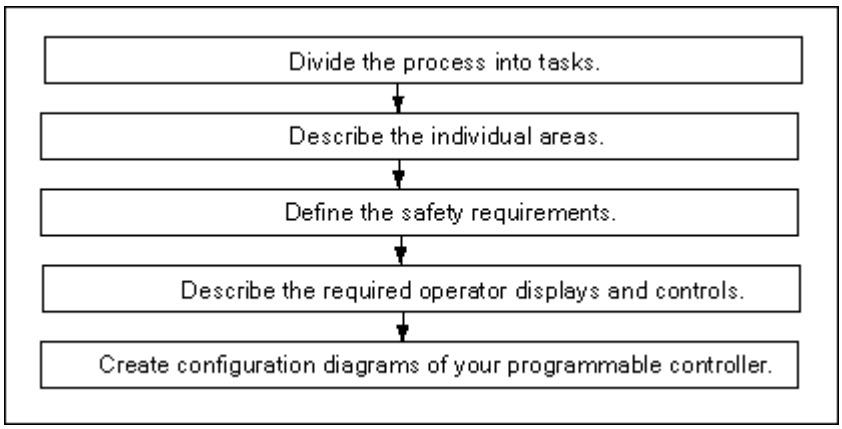

3.2 Dividing the Process into Tasks and Areas

An automation process consists of a number of individual tasks. By identifying groups of related tasks within a process and then breaking these groups down into smaller tasks, even the most complex process can be defined.

The following example of an industrial blending process can be used to illustrate how to organize a process into functional areas and individual tasks:

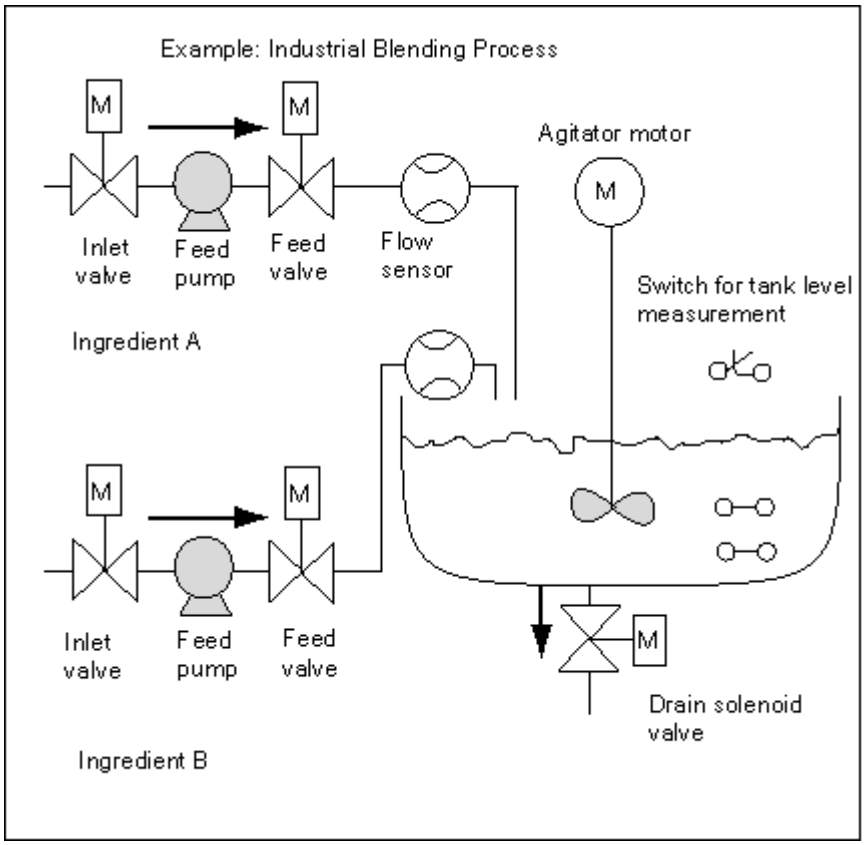

Determining the Areas of a Process

After defining the process to be controlled, divide the project into related groups or areas:

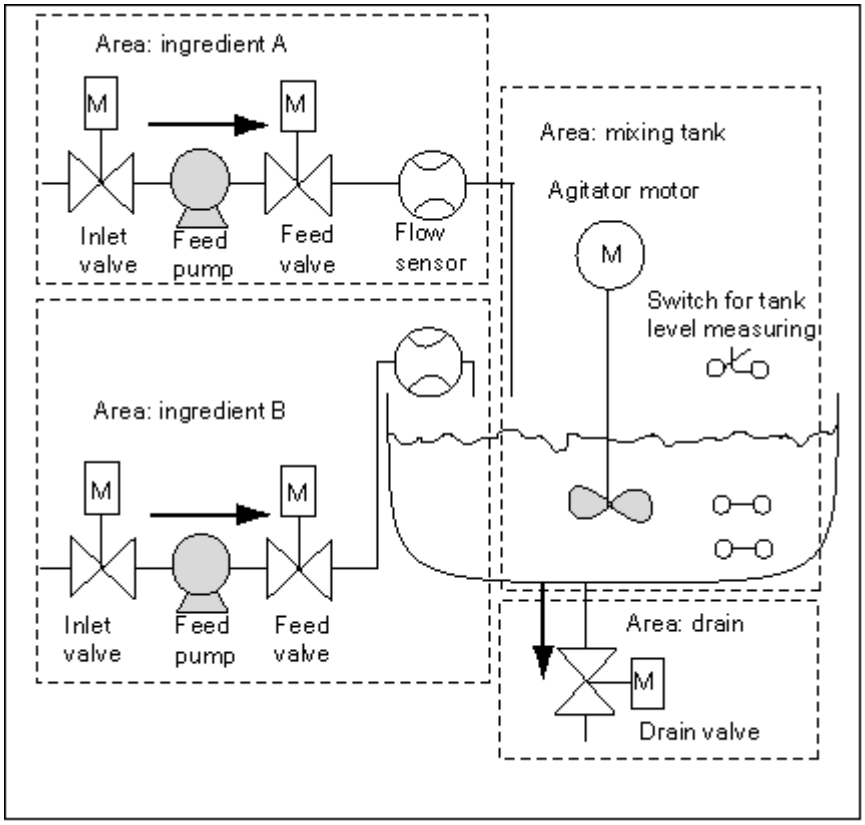

As each group is divided into smaller tasks, the tasks required for controlling that part of the process become less complicated.

In our example of an industrial blending process you can identify four distinct areas (see table below). In this example, the area for ingredient A contains the same equipment as the area for ingredient B.

Functional Area	**Equipment Used**
Ingredient A	Feed pump for ingredient A Inlet valve for ingredient A Feed valve for ingredient A Flow sensor for ingredient A
Ingredient B	Feed pump for ingredient B Inlet valve for ingredient B Feed valve for ingredient B Flow sensor for ingredient B
Mixing tank	Agitator motor Switch for tank level measurement
Drain	Drain valve

3.3 Describing the Individual Functional Areas

As you describe each area and task within your process, you define not only the operation of each area, but also the various elements that control the area. These include:

- Electrical, mechanical, and logical inputs and outputs for each task
- Interlocks and dependencies between the individual tasks

The sample industrial blending process uses pumps, motors, and valves. These must be described precisely to identify the operating characteristics and type of interlocks required during operation. The following tables provide examples of the description of the equipment used in an industrial blending process. When you have completed description, you could also use it to order the required equipment.

Ingredients A/B: Feed Pump Motors
The feed pump motors convey ingredients A and B to the mixing tank. • Flow rate: 400 l (100 gallons) per minute • Rating: 100 kW (134 hp) at 1200 rpm
The pumps are controlled (start/stop) from an operator station located near the mixing tank. The number of starts is counted for maintenance purposes. Both the counters and the display can be reset with one button.
The following conditions must be satisfied for the pumps to operate: • The mixing tank is not full. • The drain valve of the mixing tank is closed. • The emergency off is not activated.
The pumps are switched off if the following condition is satisfied: • The flow sensor signals no flow 7 seconds after the pump motor is started. • The flow sensor signals that the flow has ceased.

Ingredients A/B: Inlet and Feed Valves
The inlet and feed valves for ingredients A and B allow or prevent the flow of the ingredients into the mixing tank. The valves have a solenoid with a spring return. • When the solenoid is activated, the valve is opened. • When the solenoid is deactivated, the valve is closed.
The inlet and feed valves are controlled by the user program.
For the valves to be activated, the following condition must be satisfied: • The feed pump motor has been running for at least 1 second.
The pumps are switched off if the following condition is satisfied: • The flow sensor signals no flow.

Agitator Motor
The agitator motor mixes ingredient A with ingredient B in the mixing tank. • Rating: 100 kW (134 hp) at 1200 rpm
The agitator motor is controlled (start/stop) from an operator station located near the mixing tank. The number of starts is counted for maintenance purposes. Both the counters and the display can be reset with one button.
The following conditions must be satisfied for the pumps to operate: • The tank level sensor is not signaling "Tank below minimum." • The drain valve of the mixing tank is closed. • The emergency off is not activated.
The pumps are switched off if the following condition is satisfied: • The tachometer does not indicate that the rated speed has been reached within 10 seconds of starting the motor.

Drain Valve
The drain valve allows the mixture to drain (using gravity feed) to the next stage in the process. The valve has a solenoid with a spring return. • If the solenoid is activated, the outlet valve is opened. • If the solenoid is deactivated, the outlet valve is closed.
The outlet valve is controlled (open/close) from an operator station.
The drain valve can be opened under the following conditions: • The agitator motor is off. • The tank level sensor is not signaling "Tank empty." • The emergency off is not activated.
The pumps are switched off if the following condition is satisfied: • The tank level sensor is indicating "Tank empty."

Switches for Tank Level Measurement
The switches in the mixing tank indicate the level in the tank and are used to interlock the feed pumps and the agitator motor.

3.4 Listing Inputs, Outputs, and In/Outs

After writing a physical description of each device to be controlled, draw diagrams of the inputs and outputs for each device or task area.

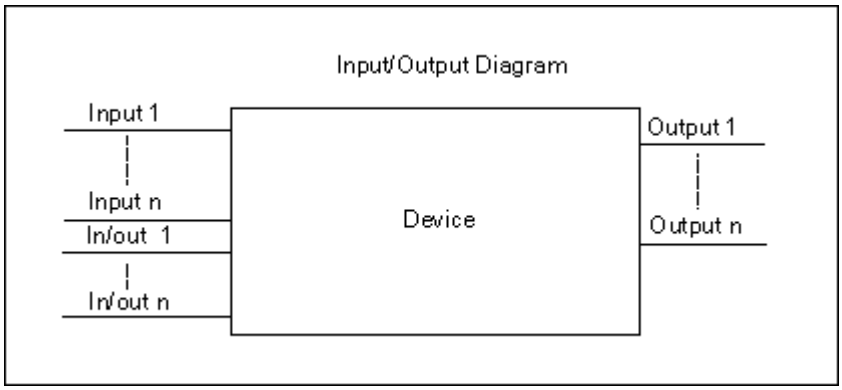

These diagrams correspond to the logic blocks to be programmed.

3.5 Creating an I/O Diagram for the Motors

Two feed pumps and one agitator are used in our example of an industrial blending process. Each motor is controlled by its own "motor block" that is the same for all three devices. This block requires six inputs: two to start or stop the motor, one to reset the maintenance display, one for the motor response signal (motor running / not running), one for the time during which the response signal must be received, and one for the number of the timer used to measure the time.

The logic block also requires four outputs: two to indicate the operating state of the motor, one to indicate faults, and one to indicate that the motor is due for maintenance.

An in/out is also necessary to activate the motor. It is used to control the motor but at the same time is also edited and modified in the program for the "motor block."

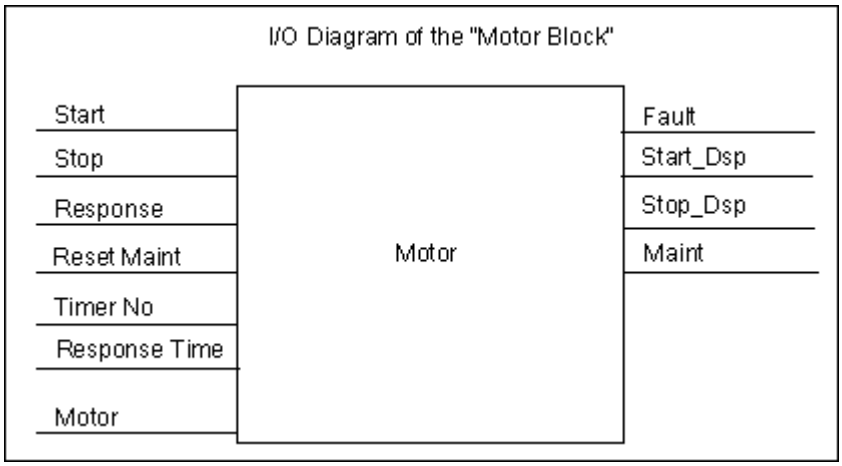

3.6 Creating an I/O Diagram for the Valves

Each valve is controlled by its own "valve block" that is the same for all valves used. The logic block has two inputs: one to open the valve and one to close the valve. It also has two outputs: one to indicate that the valve is open and the other to indicate that it is closed.

The block has an in/out to activate the valve. It is used to control the valve but at the same time is also edited and modified in the program for the "valve block."

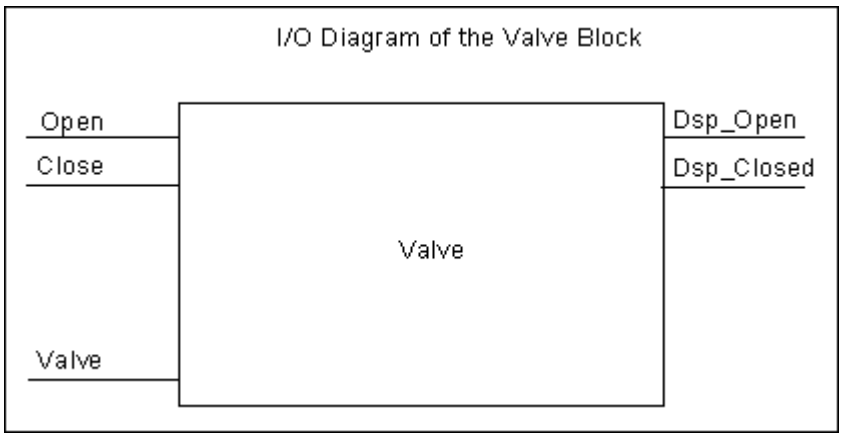

3.7 Establishing the Safety Requirements

Decide which additional elements are needed to ensure the safety of the process - based on legal requirements and corporate health and safety policy. In your description, you should also include any influences that the safety elements have on your process areas.

Defining Safety Requirements

Find out which devices require hardwired circuits to meet safety requirements. By definition, these safety circuits operate independently of the programmable controller (although the safety circuit generally provides an I/O interface to allow coordination with the user program). Normally, you configure a matrix to connect every actuator with its own emergency off range. This matrix is the basis for the circuit diagrams of the safety circuits.

To design safety mechanisms, proceed as follows:

- Determine the logical and mechanical/electrical interlocks between the individual automation tasks.
- Design circuits to allow the devices belonging to the process to be operated manually in an emergency.
- Establish any further safety requirements for safe operation of the process.

Creating a Safety Circuit

The sample industrial blending process uses the following logic for its safety circuit:

- One emergency off switch shuts down the following devices independent of the programmable controller (PLC):
  - Feed pump for ingredient A
  - Feed pump for ingredient B
  - Agitator motor
  - Valves
- The emergency off switch is located on the operator station.
- An input to the controller indicates the state of the emergency off switch.

3.8 Describing the Required Operator Displays and Controls

Every process requires an operator interface that allows human intervention in the process. Part of the design specification includes the design of the operator console.

Defining an Operator Console

In the industrial blending process described in our example, each device can be started or stopped by a pushbutton located on the operator console. This operator console includes indicators to show the status of the operation (see figure below).

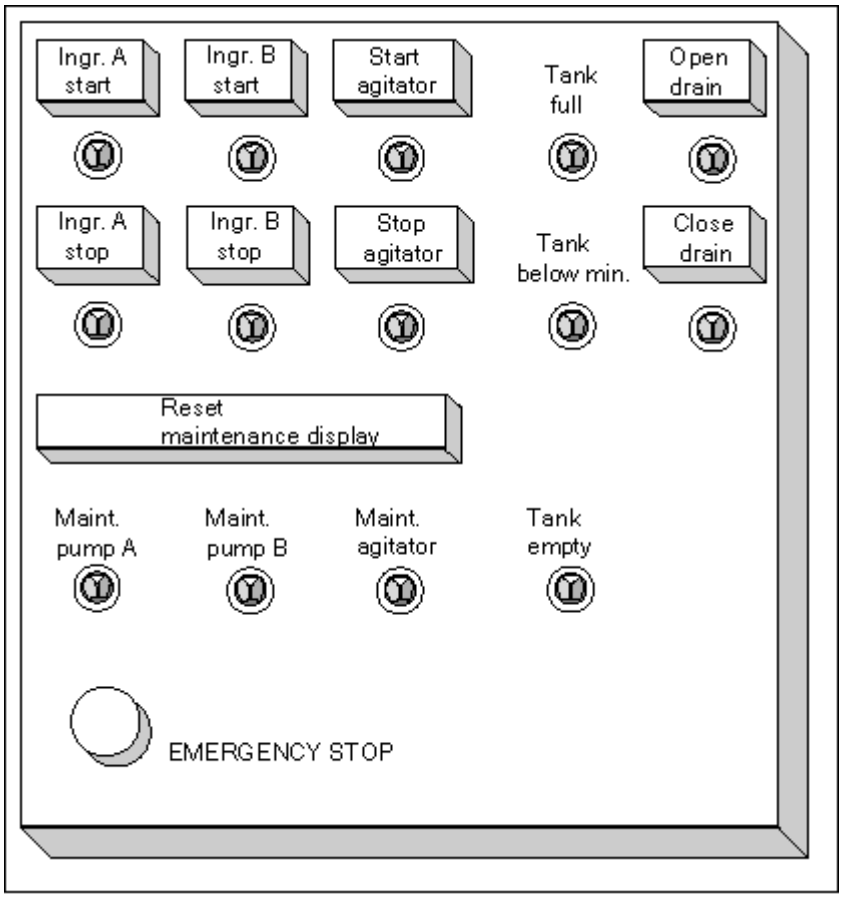

The console also includes display lamps for the devices that require maintenance after a certain number of starts and the emergency off switch with which the process can be stopped immediately. The console also has a reset button for the maintenance display of the three motors. Using this, you can turn off the maintenance display lamps for the motors due for maintenance and reset the corresponding counters to 0.

3.9 Creating a Configuration Diagram

After you have documented the design requirements, you must then decide on the type of control equipment required for the project.

By deciding which modules you want to use, you also specify the structure of the programmable controller. Create a configuration diagram specifying the following aspects:

- Type of CPU
- Number and type of I/O modules
- Configuration of the physical inputs and outputs

The following figure illustrates an example of an S7 configuration for the industrial blending process.

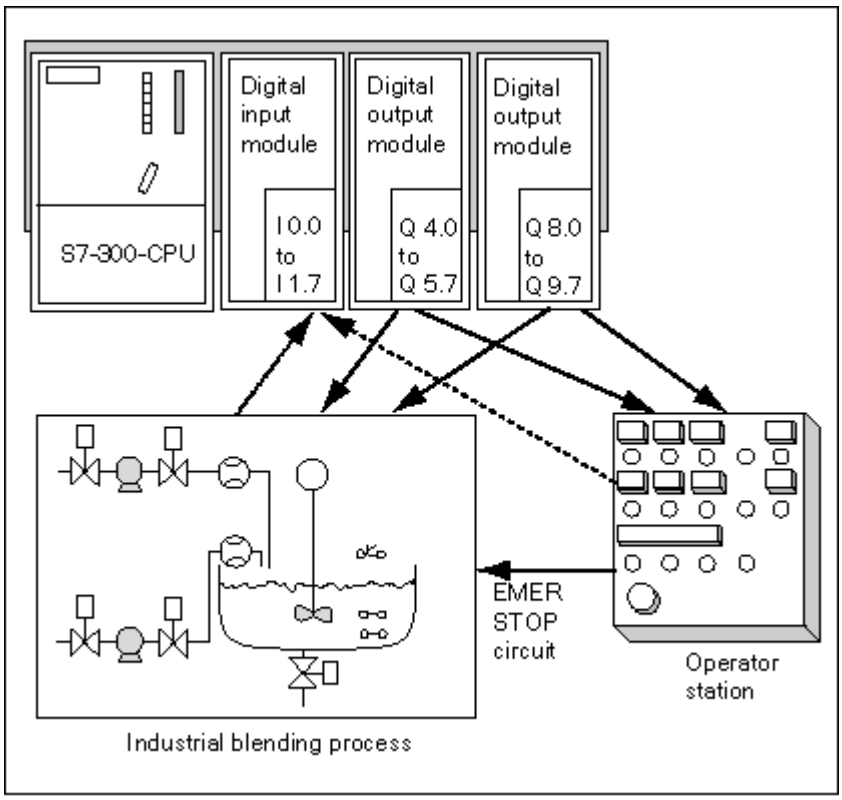

4 Basics of Designing a Program Structure

4.1 Programs in a CPU

A CPU will principally run two different programs:

- The operating system and
- The user program.

Operating System

Every CPU comes with an integrated operating system that organizes all CPU functions and sequences not associated with a specific control task. The tasks of the operating system include the following:

- Handling restart (warm start) and hot restart
- Update of the process image table of the inputs and output of the process image table of the outputs
- Calling the user program
- Acquisition of interrupt information and calling interrupt OBs
- Recognition of errors and error handling
- Management of the memory areas
- Communication with programming devices and other communication partners

You can influence CPU reactions in certain areas by modifying the operating system parameters (operating system default settings).

User Program

You create the user program and download it to the CPU. It contains all the functions required to process your specific automation task. The tasks of the user program include:

- Specifying the conditions for a restart (warm start) and hot restart on the CPU (for example, initializing signals with a particular value)
- Processing process data (for example, generating logical links of binary signals, fetching and evaluating analog signals, specifying binary signals for output, output of analog values)
- Reaction to interrupts
- Handling disturbances in the normal program cycle.

4.2 Blocks in the User Program

The STEP 7 programming software allows you to structure your user program, in other words to break down the program into individual, self-contained program sections. This has the following advantages:

- Extensive programs are easier to understand.
- Individual program sections can be standardized.
- Program organization is simplified.
- It is easier to make modifications to the program.
- Debugging is simplified since you can test separate sections.
- Commissioning your system is made much easier.

The example of an industrial blending process illustrated the advantages of breaking down an automation process into individual tasks. The program sections of a structured user program correspond to these individual tasks and are known as the blocks of a program.

Block Types

There are several different types of blocks you can use within an S7 user program:

Block	Brief Description of Function	See Also
Organization blocks (OB)	OBs determine the structure of the user program.	Organization Blocks and Program Structure
System function blocks (SFB) and system functions (SFC)	SFBs and SFCs are integrated in the S7 CPU and allow you access to some important system functions.	System Function Blocks (SFB) and System Functions (SFC)
Function blocks (FB)	FBs are blocks with a "memory" which you can program yourself.	Function Blocks (FB)
Functions (FC)	FCs contain program routines for frequently used functions.	Functions (FC)
Instance data blocks (instance DB)	Instance DBs are associated with the block when an FB/SFB is called. They are created automatically during compilation.	Instance Data Blocks
Data blocks (DB)	DBs are data areas for storing user data. In addition to the data that are assigned to a function block, shared data can also be defined and used by any blocks.	Shared Data Blocks (DB)

OBs, FBs, SFBs, FCs, and SFCs contain sections of the program and are therefore also known as logic blocks. The permitted number of blocks per block type and the permitted length of the blocks is CPU-specific.

4.2.1 Organization Blocks and Program Structure

Organization blocks (OBs) represent the interface between the operating system and the user program. Called by the operating system, they control cyclic and interrupt-driven program execution, startup behavior of the PLC and error handling. You can program the organization blocks to determine CPU behavior.

Organization Block Priority

Organization blocks determine the sequence (start events) by which individual program sections are executed. An OB call can interrupt the execution of another OB. Which OB is allowed to interrupt another OB depends on its priority. Higher priority OBs can interrupt lower priority OBs. The background OB has the lowest priority.

Types of Interrupt and Priority Classes

Start events triggering an OB call are known as interrupts. The following table shows the types of interrupt in STEP 7 and the priority of the organization blocks assigned to them. Not all organization blocks listed and their priority classes are available in all S7 CPUs (see "S7-300 Programmable Controller, Hardware and Installation Manual" and "S7-400 Programmable Controller Module Specifications Reference Manual").

Type of Interrupt	Organization Block	Priority Class (Default)	See also
Main program scan	OB1	1	Organization Block for Cyclic Program Processing (OB1)
Time-of-day interrupts	OB10 to OB17	2	Time-of-Day Interrupt Organization Blocks (OB10 to OB17)
Time-delay interrupts	OB20 OB21 OB22 OB23	3 4 5 6	Time-Delay Interrupt Organization Blocks (OB20 to OB23)
Cyclic interrupts	OB30 OB31 OB32 OB33 OB34 OB35 OB36 OB37 OB38	7 8 9 10 11 12 13 14 15	Cyclic Interrupt Organization Blocks (OB30 to OB38)
Hardware interrupts	OB40 OB41 OB42 OB43 OB44 OB45 OB46 OB47	16 17 18 19 20 21 22 23	Hardware Interrupt Organization Blocks (OB40 to OB47)

Type of Interrupt	Organization Block	Priority Class (Default)	See also
DPV1 interrupts	OB 55 OB 56 OB 57	2 2 2	Programming DPV1 Devices
Multicomputing interrupt	OB60 Multicomputing	25	Multicomputing - Synchronous Operation of Several CPUs
Synchronous cycle interrupt	OB 61 OB 62 OB 63 OB 64	25	Configuring Short and Equal-Length Process Reaction Times on PROFIBUS-DP
Redundancy errors	OB70 I/O Redundancy Error (only in H systems) OB72 CPU Redundancy Error (only in H systems)	25 28	"Error Handling Organization Blocks (OB70 to OB87 / OB121 to OB122)"
Asynchronous errors	OB80 Time Error	26, 28 [2]	"Error Handling Organization Blocks (OB70 to OB87 / OB 121 to OB122)"
	OB81 Power Supply Error OB82 Diagnostic Interrupt OB83 Insert/Remove Module Interrupt OB84 CPU Hardware Fault OB85 Program Cycle Error OB86 Rack Failure OB87 Communication Error	26, 28 [2] with S7-300, 25, 28 [2] with S7-400 and CPU 318	
Background cycle	OB90	29 [1]	Background Organization Block (OB90)
Startup	OB100 Restart (Warm start) OB101 Hot Restart OB102 Cold Restart	27 [2] 27 [2] 27 [2]	"Start-up Organization Blocks (OB100/OB101/OB102)"
Synchronous errors	OB121 Programming Error OB122 Access Error	Priority of the OB that caused the error	Error Handling Organization Blocks (OB70 to OB87 / OB121 to OB122)

1) The priority class 29 corresponds to priority 0.29. The background cycle has a lower priority than the free cycle.

2) The priority classes 27 and 28 are valid in the priority class model of the startup.

Changing the Priority

Interrupts can be assigned parameters with STEP 7. With the parameter assignment you can for example, deselect interrupt OBs or priority classes in the parameter blocks: time-of-day interrupts, time-delay interrupts, cyclic interrupts, and hardware interrupts.

The priority of organization blocks on S7-300 CPUs is fixed.

With S7-400 CPUs (and the CPU 318) you can change the priority of the following organization blocks with STEP 7:

- OB10 to OB47
- OB70 to OB72 (only H CPUs) and OB81 to OB87 in RUN mode.

The following priority classes are permitted:

- Priority classes 2 to 23 for OB10 to OB47
- Priority classes 2 to 28 for OB70 to OB72
- Priority classes 24 to 26 for OB81 to OB87; for CPUs as of approx. The middle of 2001 (Firmware Version 3.0) the ranges where extended: Priority classes 2 to 26 can be set for OB 81 to OB 84 as well as for OB 86 and OB 87.

You can assign the same priority to several OBs. OBs with the same priority are processed in the order in which their start events occur.

Error OBs started by synchronous errors are executed in the same priority class as the block being executed when the error occurred.

Local Data

When creating logic blocks (OBs, FCs, FBs), you can declare temporary local data. The local data area on the CPU is divided among the priority classes.

On S7-400, you can change the amount of local data per priority class in the "priority classes" parameter block using STEP 7.

Start Information of an OB

Every organization block has start information of 20 bytes of local data that the operating system supplies when an OB is started. The start information specifies the start event of the OB, the date and time of the OB start, errors that have occurred, and diagnostic events.

For example, OB40, a hardware interrupt OB, contains the address of the module that generated the interrupt in its start information.

Deselected Interrupt OBs

If you assign priority class 0 or assign less than 20 bytes of local data to a priority class, the corresponding interrupt OB is deselected. The handling of deselected interrupt OBs is restricted as follows:

- In RUN mode, they cannot be copied or linked into your user program.
- In STOP mode, they can be copied or linked into your user program, but when the CPU goes through a restart (warm start) they stop the startup and an entry is made in the diagnostic buffer.

By deselecting interrupt OBs that you do not require, you increase the amount of local data area available, and this can be used to save temporary data in other priority classes.

Cyclic Program Processing

Cyclic program processing is the "normal" type of program execution on programmable logic controllers, meaning the operating system runs in a program loop (the cycle) and calls the organization block OB1 once in every loop in the main program. The user program in OB1 is therefore executed cyclically.

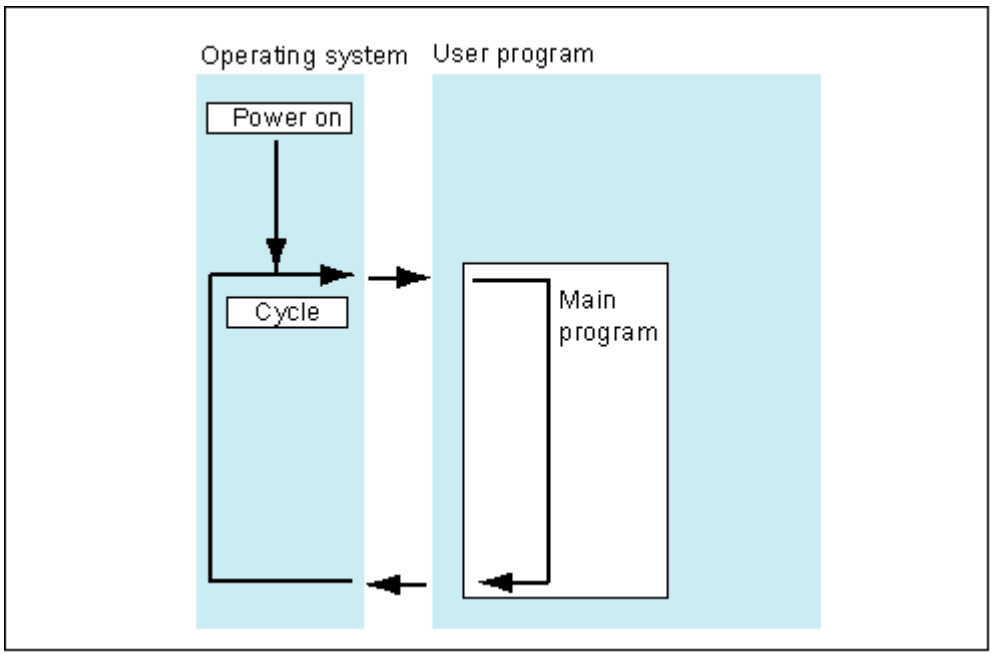

Event-Driven Program Processing

Cyclic program processing can be interrupted by certain events (interrupts). If such an event occurs, the block currently being executed is interrupted at a command boundary and a different organization block that is assigned to the particular event is called. Once the organization block has been executed, the cyclic program is resumed at the point at which it was interrupted.

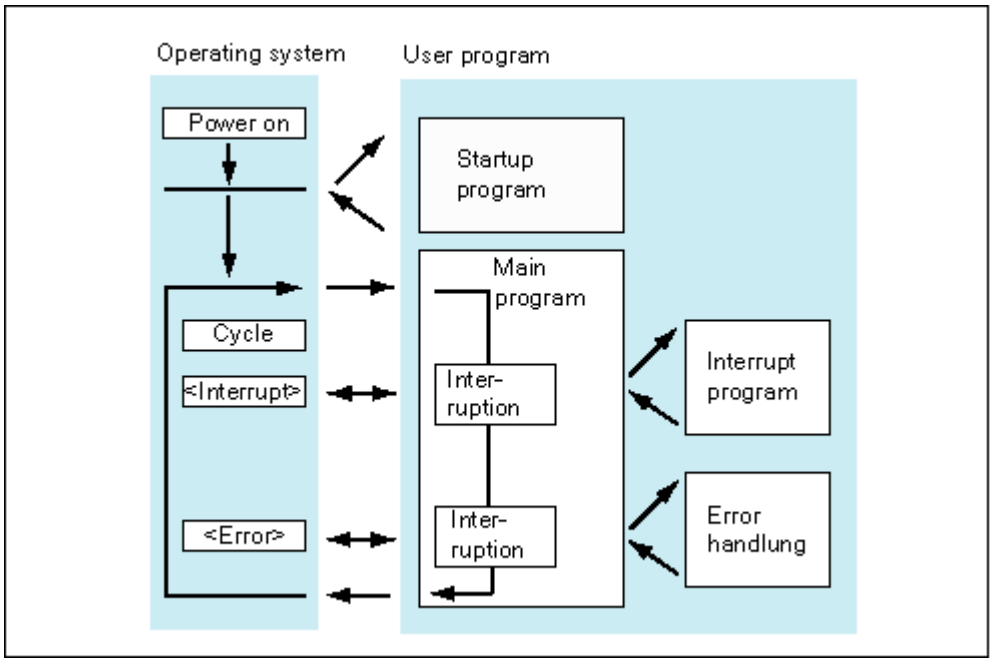

This means it is possible to process parts of the user program that do not have to be processed cyclically only when needed. The user program can be divided up into "subroutines" and distributed among different organization blocks. If the user program is to react to an important signal that occurs relatively seldom (for example, a limit value sensor for measuring the level in a tank reports that the maximum level has been reached), the subroutine that is to be processed when the signal is output can be located in an OB whose processing is event-driven.

Linear Versus Structured Programming

You can write your entire user program in OB1 (linear programming). This is only advisable with simple programs written for the S7-300 CPU and requiring little memory.

Complex automation tasks can be controlled more easily by dividing them into smaller tasks reflecting the technological functions of the process or that can be used more than once. These tasks are represented by corresponding program sections, known as the blocks (structured programming).

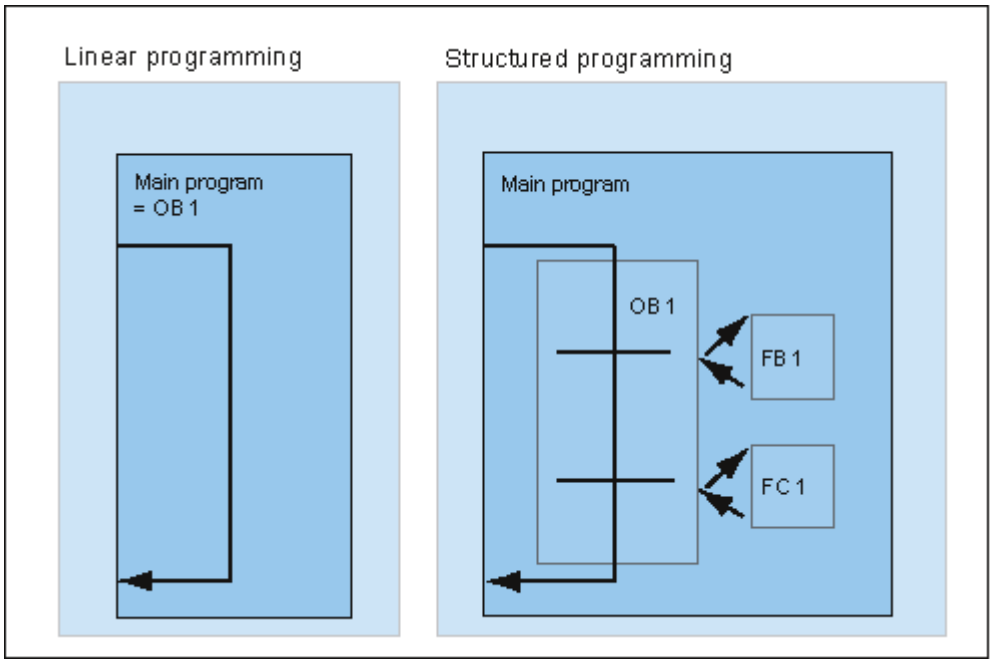

4.2.2 Call Hierarchy in the User Program

For the user program to function, the blocks that make up the user program must be called. This is done using special STEP 7 instructions, the block calls, that can only be programmed and started in logic blocks.

Order and Nesting Depth

The order and nesting of the block calls is known as the call hierarchy. The number of blocks that can be nested (the nesting depth) depends on the particular CPU.

The following figure illustrates the order and nesting depth of the block calls within a scan cycle.

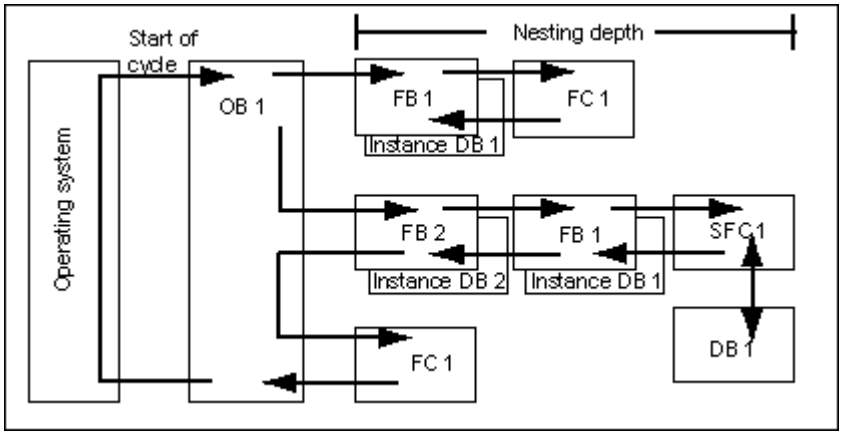

There is a set order for creating blocks:

- You create the blocks from top to bottom, so you start with the top row of blocks.
- Every block that is called must already exist, meaning that within a row of blocks the order for creating them is from right to left.
- The last block to be created is OB1.

Putting these rules into practice for the example in the figure produces the following sequence for creating the blocks:

FC1 > FB1 + instance DB1 > DB1 > SFC1 > FB2 + instance DB2 > OB1

Note

If the nesting is too deep (too many levels), the local data stack may overflow (Also refer to Local Data Stack).

Block Calls

The following figure shows the sequence of a block call within a user program. The program calls the second block whose instructions are then executed completely. Once the second or called block has been executed, execution of the interrupted block that made the call is resumed at the instruction following the block call.

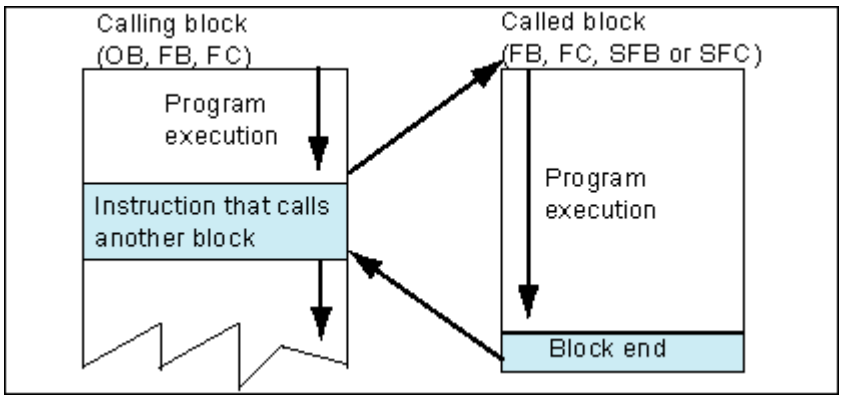

Before you program a block, you must specify which data will be used by your program, in other words, you must declare the variables of the block.

Note

OUT parameters must be described for each block call.

Note

The operating system resets the instances of SFB3 "TP" when a cold restart is performed. If you want to initialize instances of this SFB after a cold restart, you must call up the relevant instances of the SFB with PT = 0 ms via OB100. You can do this, for example, by performing an initialization routine in the blocks which contain instances of the SFB.

4.2.3 Block Types

4.2.3.1 Organization Block for Cyclic Program Processing (OB1)

Cyclic program processing is the "normal" type of program execution on programmable logic controllers. The operating system calls OB1 cyclically and with this call it starts cyclic execution of the user program.

Sequence of Cyclic Program Processing

The following table shows the phases of cyclic program processing:

Step	Sequence in CPUs to 10/98	Sequence in CPUs from 10/98
1	The operating system starts the cycle monitoring time.	The operating system starts the cycle monitoring time.
2	The CPU reads the state of the inputs of the input modules and updates the process image table of the inputs.	The CPU writes the values from the process image table of the outputs to the output modules.
3	The CPU processes the user program and executes the instructions contained in the program.	The CPU reads the state of the inputs of the input modules and updates the process image table of the inputs.
4	The CPU writes the values from the process image table of the outputs to the output modules.	The CPU processes the user program and executes the instructions contained in the program.
5	At the end of a cycle, the operating system executes any tasks that are pending, for example downloading and deleting blocks, receiving and sending global data.	At the end of a cycle, the operating system executes any tasks that are pending, for example downloading and deleting blocks, receiving and sending global data.
6	Finally, the CPU returns to the start of the cycle and restarts the cycle monitoring time.	Finally, the CPU returns to the start of the cycle and restarts the cycle monitoring time.

Process Images

So that the CPU has a consistent image of the process signals during cyclic program processing, the CPU does not address the input (I) and output (Q) address areas directly on the I/O modules but rather accesses an internal memory area of the CPU that contains an image of the inputs and outputs.

Programming Cyclic Program Processing

You program cyclic program processing by writing your user program in OB1 and in the blocks called within OB1 using STEP 7.

Cyclic program processing begins as soon as the startup program is completed without errors.

Interrupts

Cyclic program processing can be interrupted by the following:

- An interrupt
- A STOP command (mode selector, menu option on the programming device, SFC46 STP, SFB20 STOP)
- A power outage
- The occurrence of a fault or program error

Scan Cycle Time

The scan cycle time is the time required by the operating system to run the cyclic program and all the program sections that interrupt the cycle (for example, executing other organization blocks) and system activities (for example, updating the process image). This time is monitored.

The scan cycle time (TC) is not the same in every cycle. The following figures show different scan cycle times (TC1 ≠ TC2) for CPUs up to 10/98 and CPUs from 10/98:

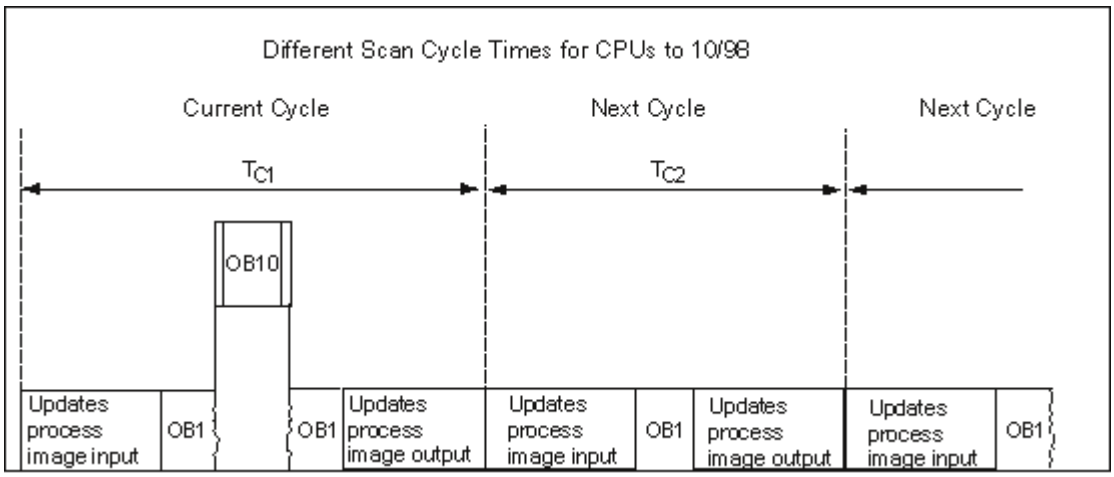

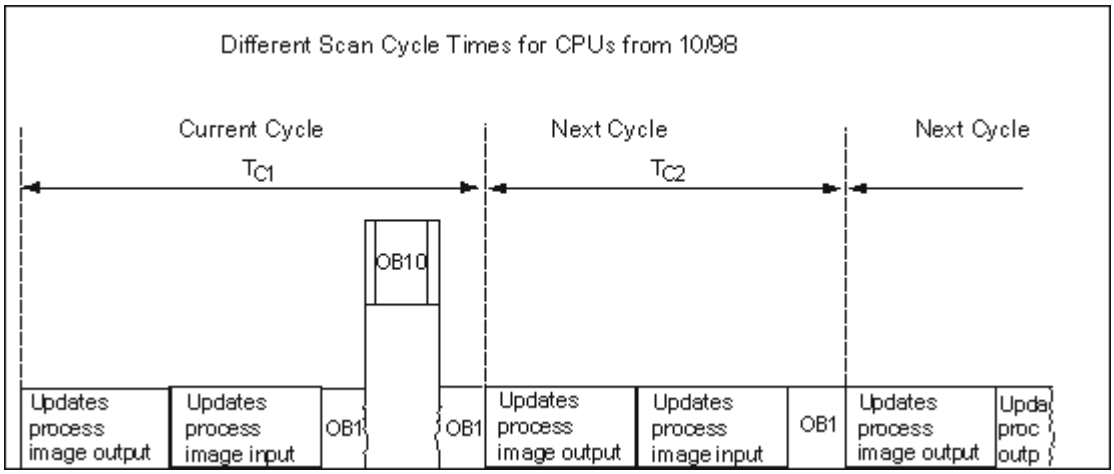

In the current cycle, OB1 is interrupted by a time-of-day interrupt.

Cycle Monitoring Time

With STEP 7, you can modify the default maximum cycle monitoring time. If this time expires, the CPU either changes to STOP mode or OB80 is called in which you can specify how the CPU should react to this error.

Minimum Cycle Time

With STEP 7, you can set a minimum cycle time for S7-400 CPUs and the CPU 318. This is useful in the following situations:

- When the interval at which program execution starts in OB1 (main program scan) should always be the same or
- When the process image tables would be updated unnecessarily often if the cycle time is too short.

The following figures show the function of the cycle monitoring time in program processing in CPUs up to 10/98 and in CPUs from 10/98.

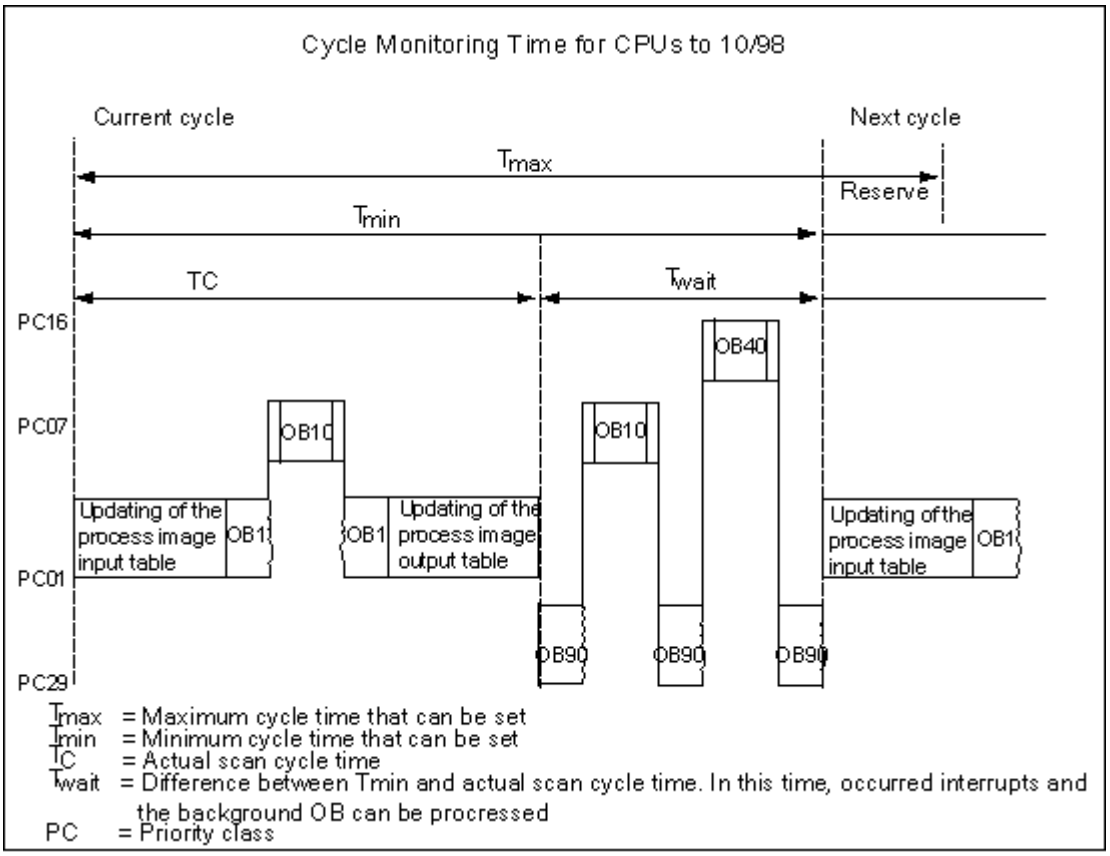

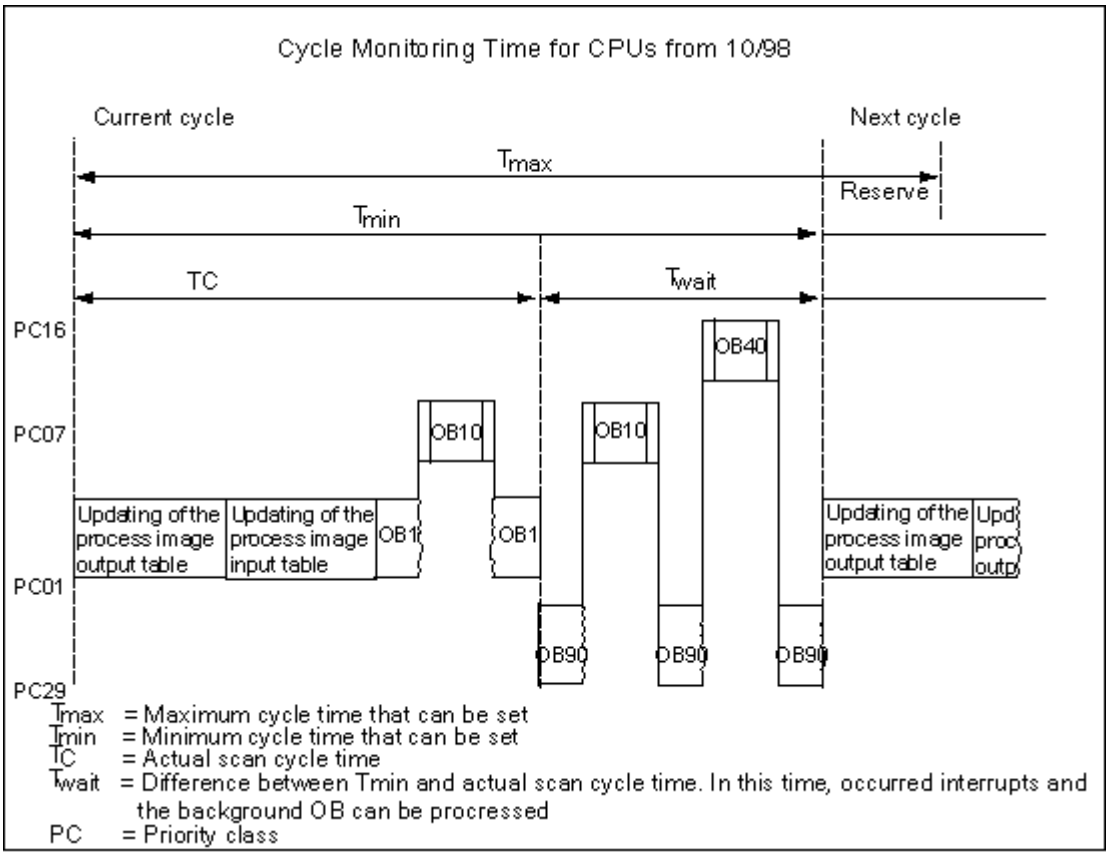

Updating the Process Image

During cyclic program processing by the CPU, the process image is updated automatically. With the S7-400 CPUs and the CPU 318 you can deselect the update of the process image if you want to:

- Access the I/O directly instead or
- Update one or more process image input or output sections at a different point in the program using system functions SFC26 UPDAT_PI and SFC27 UPDAT_PO.

Communication Load

You can use the CPU parameter "Scan Cycle Load from Communication" to control within a given framework the duration of communication processes that always increase the scan cycle time. Examples of communication processes include transmitting data to another CPU by means of MPI or loading blocks by means of a programming device.

Test functions with a programming device are barely influenced by this parameter. However, you can increase the scan cycle time considerably. In the process mode, you can limit the time set for test functions (S7-300 only).

How the Parameter works

The operating system of the CPU constantly provides the communication with the configured percent of the entire CPU processing capacity (time slice technique). If this processing capacity is not needed for the communication, it is available to the rest of the processing.

Effect on the Actual Scan Cycle Time

Without additional asynchronous events, the OB1 scan cycle time is extended by a factor that can be calculated according to the following formula:

$$\frac{100}{100 - \text{"Scan cycle load from communication (\%)"}}$$

Example 1 (no additional asynchronous events):

When you set the load added to the cycle by communication to 50%, the OB1 scan cycle time can be doubled.

At the same time, the OB1 scan cycle time is also influenced by asynchronous events (such as hardware interrupts or cyclic interrupts). From a statistical point of view, even more asynchronous events occur within an OB1 scan cycle because of the extension of the scan cycle time by the communication portion. This causes an additional increase in the OB1 scan cycle. This increase depends on how many events occur per OB1 scan cycle and on the duration of event processing.

Example 2 (additional asynchronous events considered):

For a pure OB1 execution time of 500 ms, a communication load of 50% can result in an actual scan cycle time of up to 1000 ms (provided that the CPU always has enough communication jobs to process). If, parallel to this, a cyclic interrupt with 20 ms processing time is executed every 100 ms, this cyclic interrupt would extend the scan cycle by a total of 5*20 ms = 100 ms without communication load. That is, the actual scan cycle time would be 600 ms. Because a cyclic interrupt also interrupts communication, it affects the scan cycle time by 10 * 20 ms with 50% communication load. That is, in this case, the actual scan cycle time amounts to 1200 ms instead of 1000 ms.

Note

Check the effects of changing the value of the "Scan Cycle Load from Communication" parameter while the system is running.

The communication load must be taken into account when setting the minimum scan cycle time; otherwise time errors will occur.

Recommendations

- Where possible, apply the default value.
- Increase this value only if you are using the CPU primarily for communication purposes and your user program is not time critical.
- In all other cases, only reduce the value.
- Set the process mode (S7-300 only), and limit the time needed there for test functions.

4.2.3.2 Functions (FC)

Functions (FCs) belong to the blocks that you program yourself. A function is a logic block "without memory." Temporary variables belonging to the FC are saved in the local data stack. This data is then lost when the FC has been executed. To save data permanently, functions can also use shared data blocks.

Since an FC does not have any memory of its own, you must always specify actual parameters for it. You cannot assign initial values for the local data of an FC.

Application

An FC contains a program section that is always executed when the FC is called by a different logic block. You can use functions for the following purposes:

- To return a function value to the calling block (example: math functions)
- To execute a technological function (example: single control function with a bit logic operation).

Assigning Actual Parameters to the Formal Parameters

A formal parameter is a dummy for the "actual" parameter. Actual parameters replace the formal parameters when the function is called. You must always assign actual parameters to the formal parameters of an FC (for example, an actual parameter "I 3.6" to the formal parameter "Start"). The input, output and in/out parameters used by the FC are saved as pointers to the actual parameters of the logic block that called the FC.

Important Differences Between the Output Parameters of FCs and FBs

In function blocks (FB), a copy of the actual parameters in the instance DB is used when accessing the parameters. If an input parameter is not transferred or an output parameter is not write accessed when a FB is called, the older values still stored in the instance DB /Instance DB = memory of the FBs) will be used.

Functions (FC) have no memory. Contrary to FBs, the assignment of formal parameters to these FCs is therefore not optional, but rather essentially. FC parameters are accessed via addresses (pointers to targets across area boundaries). When an address of the data area (data block) or a local variable of the calling block is used as actual parameter, a copy of the actual parameter is saved temporarily to local data area of the calling block for the transfer of the parameter.

Caution

In this case, if no data are written to an OUTPUT parameter in an FC, the block may output random values!

As the calling block's local data area which is reserved for the copy is not assigned to the OUTPUT parameter, no data will be written to this area. It will therefore remain unchanged and the random value stored at this location will be output, because local data are not automatically set to "0" by default, for example.

Thus, observe the following points:

- If possible, initialize the OUTPUT parameters.
- Set and reset instructions depend on RLO. When these instructions are used to determine the value at an OUTPUT parameter, no value is generated if the result of a previous logic operation (RLO) = 0.
- Always ensure that data are written to the OUTPUT parameters - irrespective of any program paths in the block. Pay special attention to jump instructions, to the ENO output in LAD and FBD as well as to BEC (Block End Conditional) and the influence of MCR (Master Control Relay) instructions.

Note

Although the OUTPUT parameters of an FB or the INOUT parameters of an FC and FB will not output random values (the old output value - or input value as output value - is going to be maintained even if no data are written to the parameter) you should still observe the points above in order to avoid unintentional processing of "old" values.

4.2.3.3 Function Blocks (FB)

Function blocks (FBs) belong to the blocks that you program yourself. A function block is a block "with memory." It is assigned a data block as its memory (instance data block). The parameters that are transferred to the FB and the static variables are saved in the instance DB. Temporary variables are saved in the local data stack.

Data saved in the instance DB are not lost when execution of the FB is complete. Data saved in the local data stack are, however, lost when execution of the FB is completed.

Note

To avoid errors when working with FBs, read Permitted Data Types when Transferring Parameters in the Appendix.

Application

An FB contains a program that is always executed when the FB is called by a different logic block. Function blocks make it much easier to program frequently occurring, complex functions.

Function Blocks and Instance Data Blocks

An instance data block is assigned to every function block call that transfers parameters.

By calling more than one instance of an FB, you can control more than one device with one FB. An FB for a motor type, can, for example, control various motors by using a different set of instance data for each different motor. The data for each motor (for example, speed, ramping, accumulated operating time etc.) can be saved in one or more instance DBs.

The following figure shows the formal parameters of an FB that uses the actual parameters saved in the instance DB.

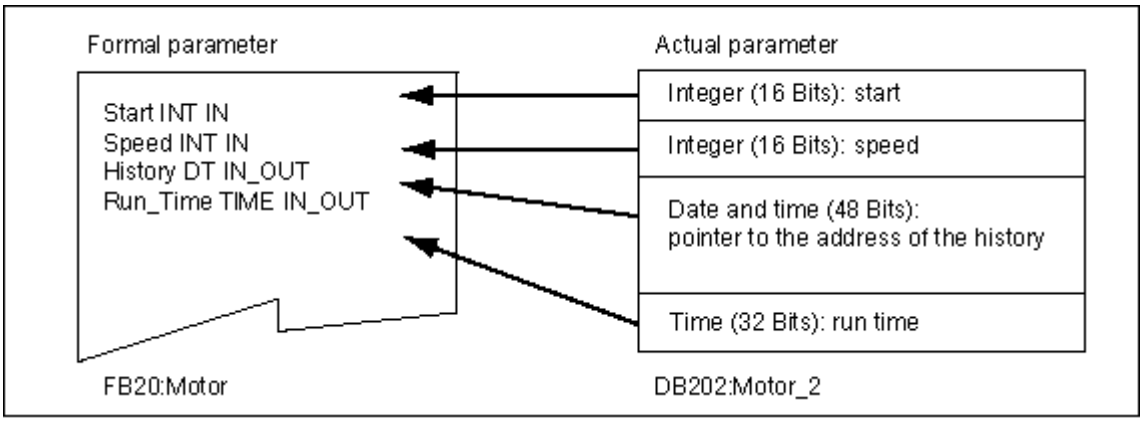

Variables of the Data Type FB

If your user program is structured so that an FB contains calls for further already existing function blocks, you can include the FBs to be called as static variables of the data type FB in the variable declaration table of the calling FB. This technique allows you to nest variables and concentrate the instance data in one instance data block (multiple instance).

Assigning Actual Parameters to the Formal Parameters

It is not generally necessary in STEP 7 to assign actual parameters to the formal parameters of an FB. There are, however, exceptions to this. Actual parameters must be assigned in the following situations:

- For an in/out parameter of a complex data type (for example, STRING, ARRAY or DATE_AND_TIME)
- For all parameter types (for example TIMER, COUNTER, or POINTER)

STEP 7 assigns the actual parameters to the formal parameters of an FB as follows:

- *When you specify actual parameters in the call statement:* the instructions of the FB use the actual parameters provided.
- *When you do not specify actual parameters in the call statement:* the instructions of the FB use the value saved in the instance DB.

The following table shows which variables of the FB must be assigned actual parameters.

	Data Type		
Variable	**Elementary Data Type**	**Complex Data Type**	**Parameter Type**
Input	No parameter required	No parameter required	Actual parameter required
Output	No parameter required	No parameter required	Actual parameter required
In/out	No parameter required	Actual parameter required	–

Assigning Initial Values to Formal Parameters

You can assign initial values to the formal parameters in the declaration section of the FB. These values are written into the instance DB associated with the FB.

If you do not assign actual parameters to the formal parameters in the call statement, STEP 7 uses the values saved in the instance DB. These values can also be the initial values that were entered in the variable declaration table of an FB.

The following table shows which variables can be assigned an initial value. Since the temporary data are lost after the block has been executed, you cannot assign any values to them.

	Data Type		
Variable	**Elementary Data Type**	**Complex Data Type**	**Parameter Type**
Input	Initial value permitted	Initial value permitted	–
Output	Initial value permitted	Initial value permitted	–
In/out	Initial value permitted	–	–
Static	Initial value permitted	Initial value permitted	–
Temporary	–	–	–

4.2.3.4 Instance Data Blocks

An instance data block is assigned to every function block call that transfers parameters. The actual parameters and the static data of the FB are saved in the instance DB. The variables declared in the FB determine the structure of the instance data block. Instance means a function block call. If, for example, a function block is called five times in the S7 user program, there are five instances of this block.

Creating an Instance DB

Before you create an instance data block, the corresponding FB must already exist. You specify the number of the FB when you create the instance data block.

One Instance DB for Each Separate Instance

If you assign several instance data blocks to a function block (FB) that controls a motor, you can use this FB to control different motors.

The data for each specific motor (for example, speed, run-up time, total operating time) are saved in different data blocks. The DB associated with the FB when it is called determines which motor is controlled. With this technique, only one function block is necessary for several motors (see the following figure).

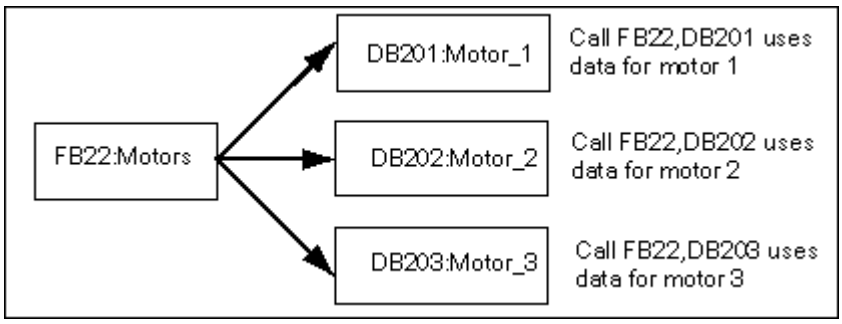

One Instance DB for Several Instances of an FB (Multiple Instances)

You can also transfer the instance data for several motors at the same time in one instance DB. To do this, you must program the calls for the motor controllers in a further FB and declare static variables with the data type FB for the individual instances in the declaration section of the calling FB.

If you use one instance DB for several instances of an FB, you save memory and optimize the use of data blocks.

In the following figure, the calling FB is FB21 "Motor processing," the variables are of data type FB22, and the instances are identified by Motor_1, Motor_2, and Motor_3.

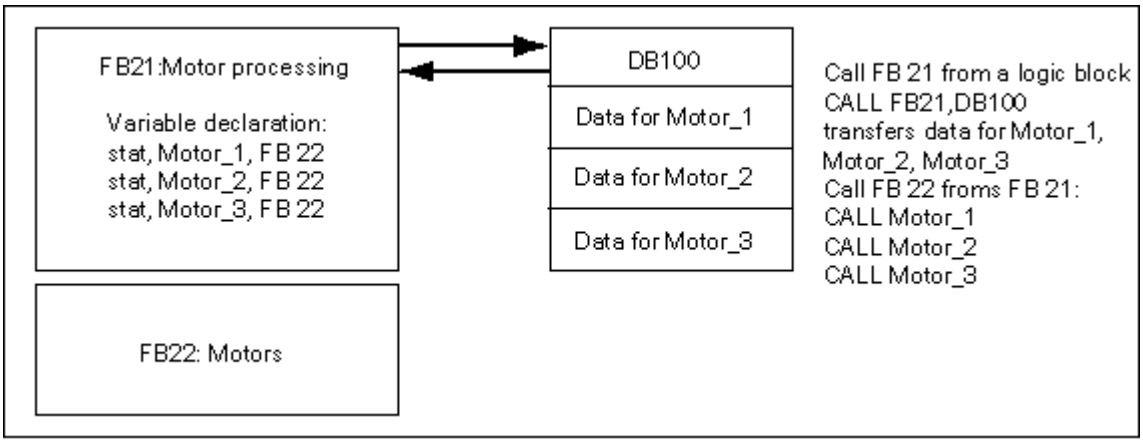

In this example, FB22 does not need its own instance data block, since its instance data are saved in the instance data block of the calling FB.

One Instance DB for Several Instances of Different FBs (Multiple Instances)

In a function block you can call the instances of other existing FBs. You can assign the instance data required for this to the instance data block of the calling FB, meaning you do not need any additional data blocks for the called FBs in this case.

For these multiple instances in one instance data block, you must declare static variables with the data type of the called function block for each individual instance in the declaration section of the calling function block. The call within the function block does not then require an instance data block, only the symbolic name of the variable.

In the example in this figure, the assigned instance data are stored in a common instance DB.

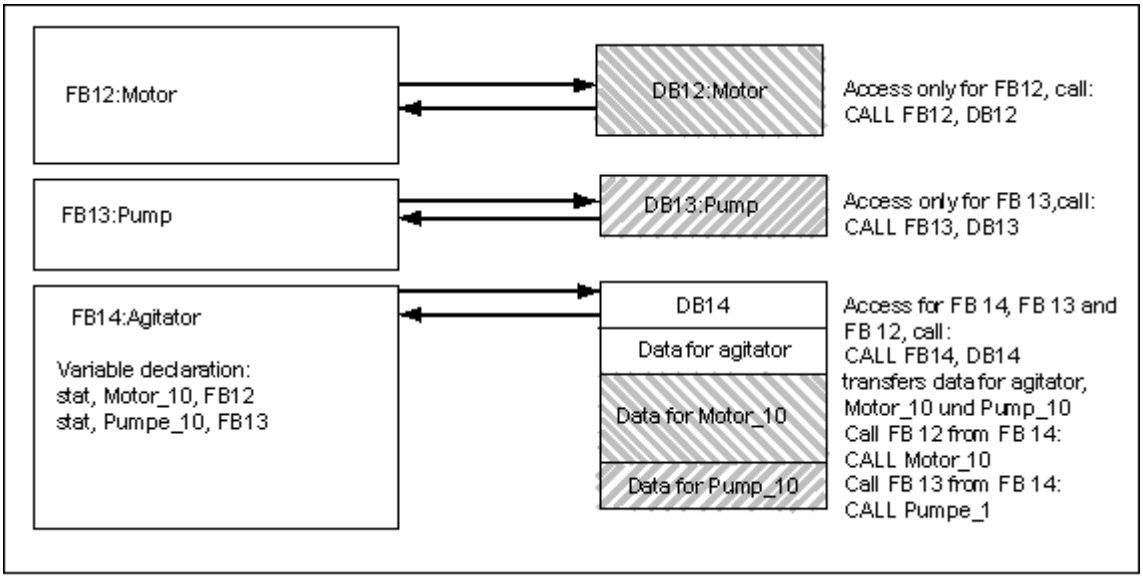

4.2.3.5 Shared Data Blocks (DB)

In contrast to logic blocks, data blocks do not contain STEP 7 instructions. They are used to store user data, in other words, data blocks contain variable data with which the user program works. Shared data blocks are used to store user data that can be accessed by all other blocks.

The size of DBs can vary. Refer to the description of your CPU for the maximum possible size.

You can structure shared data blocks in any way to suit your particular requirements.

Shared Data Blocks in the User Program

If a logic block (FC, FB, or OB) is called, it can occupy space in the local data area (L stack) temporarily. In addition to this local data area, a logic block can open a memory area in the form of a DB. In contrast to the data in the local data area, the data in a DB are not deleted when the DB is closed, in other words, after the corresponding logic block has been executed.

Each FB, FC, or OB can read the data from a shared DB or write data to a shared DB. This data remains in the DB after the DB is exited.

A shared DB and an instance DB can be opened at the same time. The following figure shows the different methods of access to data blocks.

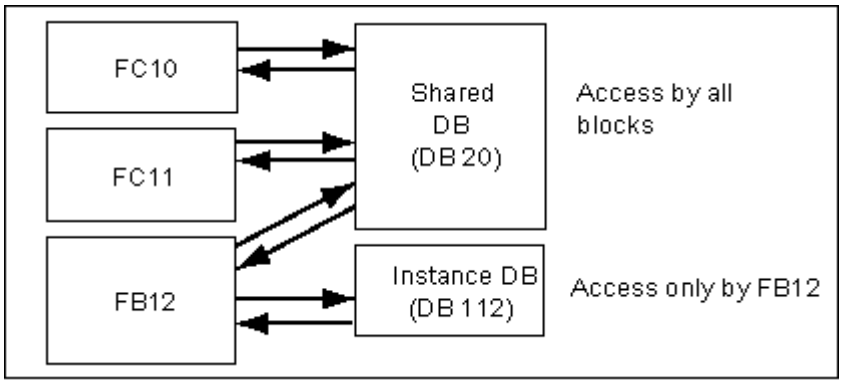

4.2.3.6 System Function Blocks (SFB) and System Functions (SFC)

Preprogrammed Blocks

You do not need to program every function yourself. S7 CPUs provide you with preprogrammed blocks that you can call in your user program.

Further information can be found in the reference help on system blocks and system functions (Jumps to Language Descriptions and Help on Blocks and System Attributes).

System Function Blocks

A system function block (SFB) is a function block integrated on the S7 CPU. SFBs are part of the operating system and are not loaded as part of the program. Like FBs, SFBs are blocks "with memory." You must also create instance data blocks for SFBs and download them to the CPU as part of the program.

S7 CPUs provide the following SFBs:

- For communication via configured connections
- For integrated special functions (for example, SFB29 "HS_COUNT" on the CPU 312 IFM and the CPU 314 IFM).

System Functions

A system function is a preprogrammed function that is integrated on the S7 CPU. You can call the SFC in your program. SFCs are part of the operating system and are not loaded as part of the program. Like FCs, SFCs are blocks "without memory."

S7 CPUs provide SFCs for the following functions:

- Copying and block functions
- Checking the program
- Handling the clock and run-time meters
- Transferring data sets
- Transferring events from a CPU to all other CPUs in multicomputing mode
- Handling time-of-day and time-delay interrupts
- Handling synchronous errors, interrupts, and asynchronous errors
- Information on static and dynamic system data, for example, diagnostics
- Process image updating and bit field processing
- Addressing modules
- Distributed I/O
- Global data communication
- Communication via non-configured connections
- Generating block-related messages

Additional Information

For more detailed information about SFBs and SFCs, refer to the "System Software for S7-300 and S7-400, System and Standard Functions" Reference Manual. The "S7-300 Programmable Controller, Hardware and Installation Manual" and "S7-400 Programmable Controller Module Specifications Reference Manual" explain which SFBs and SFCs are available.

4.2.4 Organization Blocks for Interrupt-Driven Program Processing

By providing interrupt OBs, the S7 CPUs allow the following:

- Program sections can be executed at certain times or intervals (time-driven)
- Your program can react to external signals from the process.

The cyclic user program does not need to query whether or not interrupt events have occurred. If an interrupt does occur, the operating system makes sure that the user program in the interrupt OB is executed so that there is a programmed reaction to the interrupt by the programmable logic controller.

Interrupt Types and Applications

The following table shows how the different types of interrupt can be used.

Type of Interrupt	Interrupt OBs	Application Examples
Time-of-day interrupt	OB10 to OB17	Calculation of the total flow into a blending process at the end of a shift
Time-delay interrupt	OB20 to OB23	Controlling a fan that must continue to run for 20 seconds after a motor is switched off
Cyclic interrupt	OB30 to OB38	Scanning a signal level for a closed loop control system
Hardware interrupt	OB40 to OB47	Signaling that the maximum level of a tank has been reached

4.2.4.1 Time-of-Day Interrupt Organization Blocks (OB10 to OB17)

The S7 CPUs provide the Time-Of-Day interrupt OBs that can be executed at a specified date or at certain intervals.

Time-Of-Day interrupts can be triggered as follows:

- Once at a particular time (specified in absolute form with the date)
- Periodically by specifying the start time and the interval at which the interrupt should be repeated (for example, every minute, every hour, daily).

Rules for Time-of-Day Interrupts

Time-Of-Day interrupts can only be executed when the interrupt has been assigned parameters and a corresponding organization block exists in the user program. If this is not the case, an error message is entered in the diagnostic buffer and asynchronous error handling is executed (OB80, see Error Handling Organization Blocks (OB70 to OB87 / OB121 to OB122)).

Periodic Time-Of-Day interrupts must correspond to a real date. Repeating an OB10 monthly starting on January 31st is not possible. In this case, the OB would only be started in the months that actually have 31 days (that is, not in February, April, June, etc.).

A Time-Of-Day interrupt activated during startup (restart (warm restart) or hot restart) is only executed after the startup is completed.

Time-Of-Day interrupt OBs that are deselected by the parameter assignment cannot be started. The CPU recognizes a programming error and changes to STOP mode.

Following a restart (warm restart), Time-Of-Day interrupts must be set again (for example, using SFC30 ACT_TINT in the startup program).

Starting the Time-of-Day Interrupt

To allow the CPU to start a Time-Of-Day interrupt, you must first set and then activate the Time-Of-Day interrupt. There are three ways of starting the interrupt:

- Automatic start of the Time-Of-Day interrupt by assigning appropriate parameters with STEP 7 (parameter block "Time-Of-Day interrupts")
- Setting and activating the Time-Of-Day interrupt with SFC28 SET_TINT and SFC30 ACT_TINT from within the user program
- Setting the Time-Of-Day interrupt by assigning parameters with STEP 7 and activating the Time-Of-Day interrupt with SFC30 ACT_TINT in the user program.

Querying the Time-of-Day Interrupt

To query which Time-Of-Day interrupts are set and when they are set to occur, you can do one of the following:

- Call SFC31 QRY_TINT
- Request the list "interrupt status" of the system status list.

Deactivating the Time-of-Day Interrupt

You can deactivate Time-Of-Day interrupts that have not yet been executed with SFC29 CAN_TINT. Deactivated Time-Of-Day interrupts can be set again using SFC28 SET_TINT and activated with SFC30 ACT_TINT.

Priority of the Time-of-Day Interrupt OBs

All eight Time-Of-Day interrupt OBs have the same priority class (2) as default and are therefore processed in the order in which their start event occurs. You can, however, change the priority class by selecting suitable parameters.

Changing the Set Time

You can change the Time-Of-Day set for the interrupt as follows:

- A clock master synchronizes the time for masters and slaves.
- SFC0 SET_CLK can be called in the user program to set a new time.

Reaction to Changing the Time

The following table shows how Time-Of-Day interrupts react after the time has been changed.

If...	**Then...**
you move the time ahead and one or more Time-Of-Day interrupts were skipped,	OB80 is started and the Time-Of-Day interrupts that were skipped are entered in the start information of OB80.
you have not deactivated the skipped Time-Of-Day interrupts in OB80,	the skipped Time-Of-Day interrupts are no longer executed.
you have not deactivated the skipped Time-Of-Day interrupts in OB80,	the first skipped Time-Of-Day interrupt is executed, the other skipped Time-Of-Day interrupts are ignored.
you move the time back, the start events for the Time-Of-Day interrupts occur again,	the execution of the Time-Of-Day interrupt is repeated with **S7-300-CPUs** and not repeated for **S7-400-CPUs and CPU 318**.

4.2.4.2 Time-Delay Interrupt Organization Blocks (OB20 to OB23)

The S7 CPUs provide time delay OBs with which you can program the delayed execution of parts of your user program.

Rules for Time-Delay Interrupts

Time delay interrupts can only be executed when the corresponding organization block exists in the CPU program. If this is not the case, an error message is entered in the diagnostic buffer and asynchronous error handling is executed (OB80, see Error Handling Organization Blocks (OB70 to OB87 / OB121 to OB122)).

Time delay interrupt OBs that were deselected by the parameter assignment cannot be started. The CPU recognizes a programming error and changes to STOP mode.

Time delay interrupts are triggered when the delay time specified in SFC32 SRT_DINT has expired.

Starting the Time-Delay Interrupt

To start a time delay interrupt, you must specify the delay time in SFC32 after which the corresponding time delay interrupt OB is called. Refer to the "S7-300 Programmable Controller, Hardware and Installation Manual" and "S7-400 Programmable Controller Module Specifications Reference Manual" for the maximum permitted length of the delay time.

Priority of the Time-Delay Interrupt OBs

The default priority for the time-delay interrupt OBs is priority class 3 to 6. You can assign parameters to change the priority classes.

4.2.4.3 Cyclic Interrupt Organization Blocks (OB30 to OB38)

The S7 CPUs provide cyclic interrupt OBs that interrupt cyclic program processing at certain intervals.

Cyclic interrupts are triggered at intervals. The time at which the interval starts is the mode transition from STOP to RUN.

Rules for Cyclic Interrupts

When you specify the intervals, make sure that there is enough time between the start events of the individual cyclic interrupts for processing the cyclic interrupts themselves.

If you assign parameters to deselect cyclic interrupt OBs, they can no longer be started. The CPU recognizes a programming error and changes to STOP mode.

Starting the Cyclic Interrupt

To start a cyclic interrupt, you must specify the interval in the cyclic interrupts parameter block using STEP 7. The interval is always a whole multiple of the basic clock rate of 1 ms.

Interval = n x basic clock rate 1 ms

Each of the nine available cyclic interrupt OBs has a default interval (see the following table). The default interval becomes effective when the cyclic interrupt OB assigned to it is loaded. You can, however, assign parameters to change the default values. Refer to your "S7-300 Programmable Controller, Hardware and Installation Manual" and your "S7-400 Programmable Controller, Module Specifications Reference Manual" for the upper limit.

Phase Offset in Cyclic Interrupts

To avoid cyclic interrupts of different cyclic interrupt OBs being started at the same point and possibly causing a time error (cycle time exceeded) you can specify a phase offset. The phase offset ensures that the execution of a cyclic interrupt is delayed by a certain time after the interval has expired.

Phase offset = m x basic clock rate (where $0 \leq m < n$)

The following figure shows how a cyclic interrupt OB with phase offset (OB37) is executed in contrast to a cyclic interrupt without phase offset (OB38).

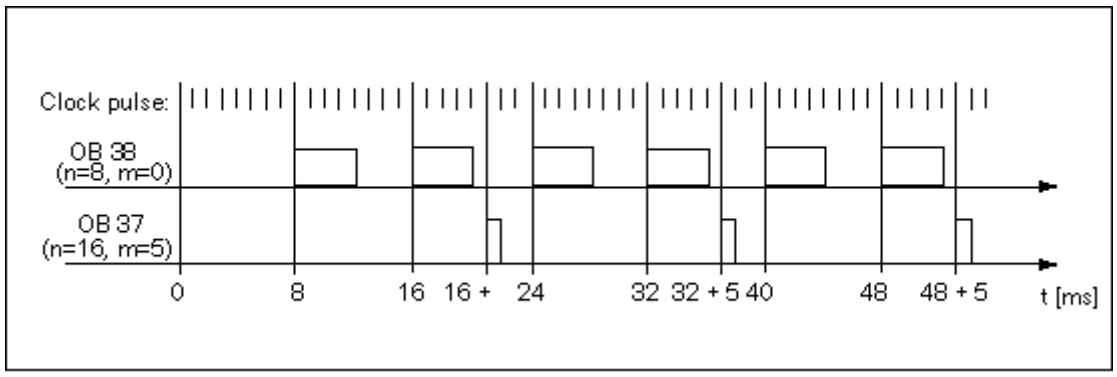

Priority of the Cyclic Interrupt OBs

The following table shows the default intervals and priority classes of the cyclic interrupt OBs. You can assign parameters to change the interval and the priority class.

Cyclic Interrupt OB	Interval in ms	Priority Class
OB30	5000	7
OB31	2000	8
OB32	1000	9
OB33	500	10
OB34	200	11
OB35	100	12
OB36	50	13
OB37	20	14
OB38	10	15

4.2.4.4 Hardware Interrupt Organization Blocks (OB40 to OB47)

The S7 CPUs provide hardware interrupt OBs that react to signals from the modules (for example, signal modules (SMs), communications processors (CPs), function modules (FMs)). With STEP 7, you can decide which signal from a configurable digital or analog module starts the OB. With CPs and FMs, use the appropriate parameter assignment dialogs.

Hardware interrupts are triggered when a signal module with hardware interrupt capability and with an enabled hardware interrupt passes on a received process signal to the CPU or when a function module of the CPU signals an interrupt.

Rules for Hardware Interrupts

Hardware interrupts can only be executed when the corresponding organization block exists in the CPU program. If this is not the case, an error message is entered in the diagnostic buffer and asynchronous error handling is executed (OB80, see Error Handling Organization Blocks (OB70 to OB87 / OB121 to OB122)).

If you have deselected hardware interrupt OBs in the parameter assignment, these cannot be started. The CPU recognizes a programming error and changes to STOP mode.

Assigning Parameters to Signal Modules with Hardware Interrupt Capability

Each channel of a signal module with hardware interrupt capability can trigger a hardware interrupt. For this reason, you must specify the following in the parameter sets of signal modules with hardware interrupt capability using STEP 7:

- What will trigger a hardware interrupt.
- Which hardware interrupt OB will be executed (the default for executing all hardware interrupts is OB40).

Using STEP 7, you activate the generation of hardware interrupts on the function blocks. You assign the remaining parameters in the parameter assignment dialogs of these function modules.

Priority of the Hardware Interrupt OBs

The default priority for the hardware interrupt OBs is priority class 16 to 23. You can assign parameters to change the priority classes.

4.2.4.5 Startup Organization Blocks (OB100 / OB101 / OB102)

Startup Types

There are three distinct types of startup:

- Hot restart (not in S7-300 and S7-400H)
- Restart (warm restart)
- Cold restart

The following table shows which OB the operating system calls in each startup type.

Startup Type	Related OB
Hot restart	OB101
Restart (warm restart)	OB100
Cold restart	OB102

Start Events for Startup OBs

The CPU executes a startup after the following events:

- After power up
- After you switch the mode selector from STOP to RUN/RUN-P
- After a request from a communication function
- After synchronizing in multicomputing mode
- In an H system after link-up (only on the standby CPU)

Depending on the start event, the CPU used, and its set parameters the relevant startup OB (OB100, OB101, or OB102) is called.

Startup Program

You can specify the conditions for starting up your CPU (initialization values for RUN, startup values for I/O modules) by writing your program for the startup in the organization blocks OB100 for restart (warm restart), OB101 for hot restart, or OB102 for cold restart.

There are no restrictions to the length of the startup program and no time limit since the cycle monitoring is not active. Time-driven or interrupt-driven execution is not possible in the startup program. During the startup, all digital outputs have the signal state 0.

Startup Type After Manual Restart

On S7-300 CPUs only a manual restart (warm restart) or cold restart (CPU 318-2 only) is possible.

On some S7-400 CPUs, you can restart manually using the mode selector and the startup type switch (CRST/WRST) if this is permitted by the parameter assignment you made with STEP 7. A manual restart (warm restart) is possible without specifically assigning parameters.

Startup Type After Automatic Restart

On S7-300 CPUs, only a restart (warm restart) is possible following power up.

On S7-400 CPUs, you can specify whether an automatic startup following power up leads to a restart (warm restart) or a hot restart.

Clearing the Process Image

When an S7-400 CPU is restarted, the remaining cycle is executed, and as default, the process image output table is cleared. You can prevent the process image being cleared if you want the user program to continue with the old values following a restart.

Module Exists/Type Monitoring

In the parameters, you can decide whether the modules in the configuration table are checked to make sure they exist and that the module type matches before the startup.

If the module check is activated, the CPU will not start up if a discrepancy is found between the configuration table and the actual configuration.

Monitoring Times

To make sure that the programmable controller starts up without errors, you can select the following monitoring times:

- The maximum permitted time for transferring parameters to the modules
- The maximum permitted time for the modules to signal that they are ready for operation after power up
- On S7-400 CPUs, the maximum time of an interruption during which a hot restart is permitted.

Once the monitoring times expire, the CPU either changes to STOP, or only a restart (warm restart) is possible.

4.2.4.6 Background Organization Block (OB90)

If you have specified a minimum scan cycle time with STEP 7 and this is longer than the actual scan cycle time, the CPU still has processing time available at the end of the cyclic program. This time is used to execute the background OB. If OB90 does not exist on your CPU, the CPU waits until the specified minimum scan cycle time has elapsed. You can therefore use OB90 to allow processes where time is not critical to run and thus avoid wait times.

Priority of the Background OB

The background OB has priority class 29, which corresponds to priority 0.29. It is therefore the OB with the lowest priority. Its priority class cannot be changed by reassigning parameters.

The following figure shows an example of processing the background cycle, the main program cycle, and OB10 (in CPUs as of 10/98).

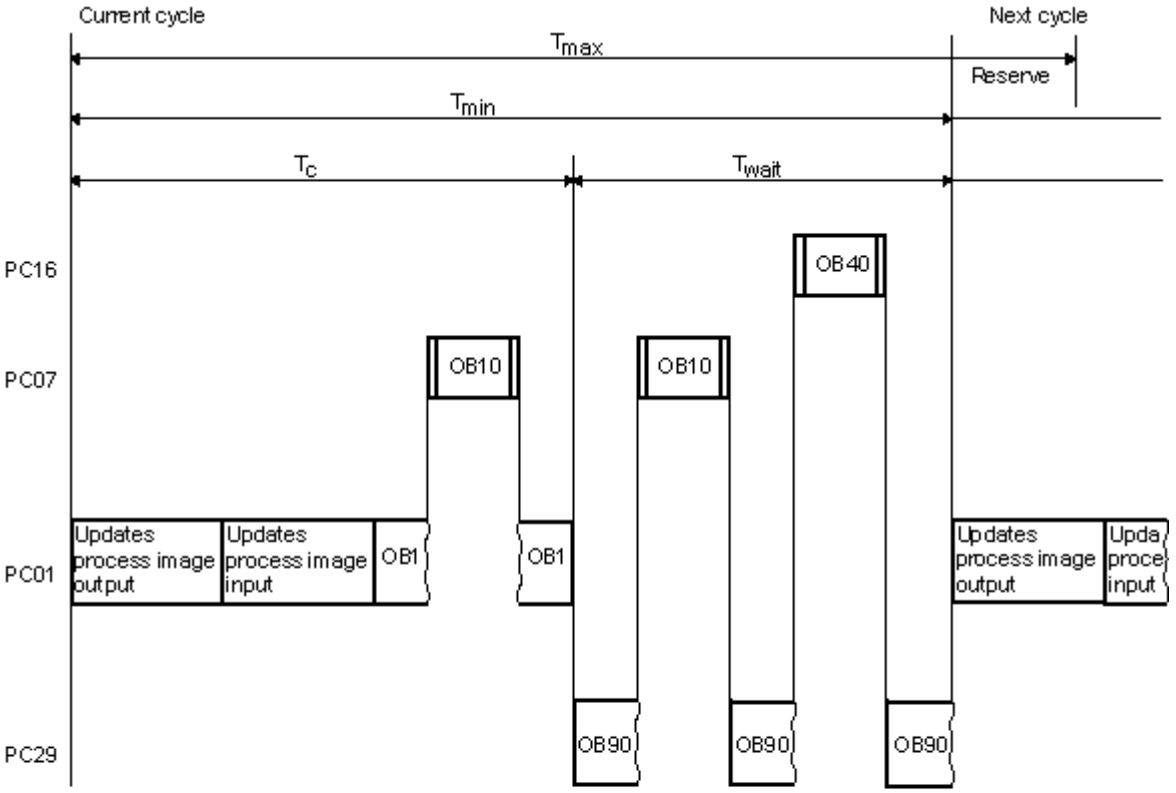

Tmax = Maximum cycle time that can be set
Tmin = Minimum cycle time that can be set
Tc = Actual scan cycle time
Twait = Difference betwin Tmin and actual scan cycle time. In this time, occured interrupts and the background OB can be proccessed
PC = Priority class

Programming OB90

The run time of OB90 is not monitored by the CPU operating system so that you can program loops of any length in OB90. Ensure that the data you use in the background program are consistent by observing the following when programming:

- The reset events of OB90 (see the "System Software for S7-300 and S7-400, System and Standard Functions" Reference Manual)
- The process image update asynchronous to OB90.

4.2.4.7 Error Handling Organization Blocks (OB70 to OB87 / OB121 to OB122)

Types of Errors

The errors that can be detected by the S7 CPUs and to which you can react with the help of organization blocks can be divided into two basic categories:

- Synchronous errors: these errors can be assigned to a specific part of the user program. The error occurs during the execution of a particular instruction. If the corresponding synchronous error OB is not loaded, the CPU changes to STOP mode when the error occurs.
- Asynchronous errors: these errors cannot be directly assigned to the user program being executed. These are priority class errors, faults on the programmable logic controller (for example, a defective module), or redundancy errors. If the corresponding asynchronous error OB is not loaded, the CPU changes to STOP mode when the error occurs (exceptions: OB70, OB72, OB81, OB 87).

The following table shows the types of errors that can occur, divided up into the categories of the error OBs.

Asynchronous Errors/Redundancy Errors	**Synchronous Errors**
OB70 I/O Redundancy Error (only H CPUs)	OB121 Programming Error (for example, DB is not loaded)
OB72 CPU Redundancy Error (only in H CPUs, for example, failure of a CPU)	OB122 I/O Access Error (for example, access to a signal module that does not exist)
OB80 Time Error (for example, scan cycle time exceeded)	
OB81 Power Supply Error (for example, battery failure)	
OB82 Diagnostic Interrupt (for example, short circuit in the input module)	
OB83 Remove/Insert Interrupt (for example, removing an input module)	
OB84 CPU Hardware Fault (fault at the interface to the MPI network)	
OB85 Priority Class Error (for example, OB is not loaded)	
OB86 Rack Failure	
OB87 Communication Error (for example, incorrect message frame ID for global data communication)	

Using OBs for Synchronous Errors

Synchronous errors occur during the execution of a particular instruction. When these errors occur, the operating system makes an entry in the I stack and starts the OB for synchronous errors.

The error OBs called as a result of synchronous errors are executed as part of the program in the same priority class as the block that was being executed when the error was detected. The details about the error that triggered the OB call are in the start information for the OB. You can use this information to react to the error condition and then to return to processing your program (for example, if an access error occurs on an analog input module, you can specify a substitute value in OB122 using SFC44 RPL_VAL). The local data of the error OBs, do, however, take up additional space in the L stack of this priority class.

With S7-400 CPUs, one synchronous error OB can start a further synchronous error OB. This is not possible with S7-300 CPUs.

Using OBs for Asynchronous Errors

If the operating system of the CPU detects an asynchronous error, it starts the corresponding error OB (OB70 to OB73 and OB80 to OB87). The OBs for asynchronous errors have the highest priority as default and they cannot be interrupted by other OBs if all asynchronous error OBs have the same priority. If more than one asynchronous error OB with the same priority occurs simultaneously, they are processed in the order they occurred.

Masking Start Events

Using system functions (SFCs), you can mask, delay, or disable the start events for several OBs. For more detailed information about these SFCs and the organization blocks, refer to the "System Software for S7-300 and S7-400, System and Standard Functions" Reference Manual.

Type of Error OB	SFC	Function of the SFC
Synchronous error OBs	SFC36 MSK_FLT	Masks individual synchronous errors. Masked errors do not start an error OB and do not trigger programmed reactions
	SFC37 DMSK_FLT	Unmasks synchronous errors
Asynchronous error OBs	SFC39 DIS_IRT	Disables all interrupts and asynchronous errors. Disabled errors do not start an error OB in any of the subsequent CPU cycles and do not trigger programmed reactions
	SFC40 EN_IRT	Enables interrupts and asynchronous errors
	SFC41 DIS_AIRT	Delays higher priority interrupts and asynchronous errors until the end of the OB
	SFC42 EN_AIRT	Enables higher priority interrupts and asynchronous errors

Note

If you want interrupts to be ignored, it is more effective to disable them using an SFC, rather than to download an empty OB (with the contents BE).

5 Startup and Operation

5.1 Starting STEP 7

When you start Windows, you will find an icon for the SIMATIC Manager, the starting point for the STEP 7 software on the Windows interface.

The quickest method to start STEP 7 is to position the cursor on the icon and double-click. The window containing the SIMATIC Manager is then opened. From here you can access all the functions you have installed for the standard package and any optional packages.

Alternatively you can also start the SIMATIC Manager via the "Start" button in the taskbar of the operating system. You will find the entry under "Simatic".

Note

You will find more information about standard Windows operation and options in your Windows user's guide or in the online help of your Windows operating system.

SIMATIC Manager

The SIMATIC Manager is the basic application for configuring and programming. You can perform the following functions in the SIMATIC Manager:

- Set up projects
- Configure and assign parameters to hardware
- Configure hardware networks
- Program blocks
- Debug and commission your programs

Access to the various functions is designed to be object oriented, and intuitive and easy to learn.

You can work with the SIMATIC Manager in one of two ways:

- Offline, without a programmable controller connected
- Online, with a programmable controller connected

Note the relevant safety notices in each case.

How to Proceed from Here

You create automation tasks in the form of "Projects." You will make it easier for yourself if you read up on the following basic topics before you start work:

- User interface
- Some basic operating steps
- Online help

5.2 Starting STEP 7 with Default Start Parameters

From STEP 7 V5.0 onwards, you can create several symbols in the SIMATIC Manager and specify start parameters in the call line. By doing this, you can cause the SIMATIC Manager to position on the object described by these parameters. This allows you to jump to the corresponding locations in a project immediately just by double-clicking.

On calling **s7tgtopx.exe**, you can specify the following start parameters:

/e <complete physical project path>

/o <logical path of the object on which you want to position>

/h <ObjectID>

/onl

The start parameter /**onl** causes the project to be opened online and the specified path to be called.

/off

The start parameter /**off** causes the project to be opened offline and the specified path to be called.

/keep

The start parameter /keep causes the following to occur:

If the SIMATIC Manager is open, the already displayed projects are opened in addition to the new project to be explicitly opened by means of the command line. If the SIMATIC Manager is not yet open, then the new project is opened along with the projects stored in the session memory of the SIMATIC Manager. If this start parameter is not specified, the opened projects are closed first, the session memory is ignored and only the one specified project is opened.

/noopen

The start parameter /**noopen** causes no project to be opened when SIMATIC Manager is started.

The easiest way to establish suitable parameters is described below.

Establishing Parameters by Copying and Pasting

Proceed as follows:

1. On your desktop, create a new link to the file s7tgtopx.exe. This file is located in the installation directory under S7bin.
2. Display the properties dialog box.
3. Select the "Link" tab. The entry under "Target" should now be expanded as follows.
4. Select the required object in the SIMATIC Manager.
5. Copy the object to the clipboard using the key combination CTRL+ALT+C.
6. Position the cursor at the end of the "Target" entry in the "Link" tab.
7. Paste the contents of the clipboard using the key combination CTRL+V.
8. Close the dialog box by confirming with "OK."

Example of Parameters:

/e F:\SIEMENS\STEP7\S7proj\MyConfig\MyConfig.s7p /keep

/o "1,8:MyConfig\SIMATIC 400(1)\CPU416-1\S7-Program(1)\Blocks\FB1"

/h T00112001;129;T00116001;1;T00116101;16e /keep

Note on the Structure of the Project Path

The project path is the physical path in the file system.

The complete logical path has the following structure:

[View ID,online ID]:project name\{object name\}*\ object name

Example: /o 1.8:MyConfig\SIMATIC 400(1)\CPU416-1\S7-Program(1)\Blocks\FB1

The path of network drives must be specified in UNC notation (= Universal Naming Convention, in other words \\<servername>\<share>\...).

Example: \\<servername>\<share>\SIEMENS\STEP7\S7proj\MyConfig\MyConfig.s7p /keep

Note on the Structure of the Logical Path

The complete logical path and the Object ID can only be created using the copy and paste functions.

However, it is also possible to specify the path which can be read by the user. In the example above, that would be:

/o "MyConfig\SIMATIC 400(1)\CPU416-1\S7-Program(1)\Blocks\FB1". By adding /onl or /off the user can specify whether the path is valid in the online or offline window. You do not need to specify this if you use the copy and paste functions.

Important: If the path contains blanks, it must be placed within quotation marks.

5.3 Calling the Help Functions

Online Help

The online help system provides you with information at the point where you can use it most efficiently. You can use the online help to access information quickly and directly without having to search through manuals. You will find the following types of information in the online help:

- **Contents**: offers a number of different ways of displaying help information
- **Context-sensitive Help** (F1 key): with the F1 key you access information on the object you just selected with the mouse or on the active dialog box or window
- **Introduction**: gives a brief introduction to the use, the main features, and the functional scope of an application
- **Getting Started**: summarizes the basic steps you need to execute to get started with the application
- **Using Help**: provides a description of ways of finding specific information in the online help
- **About**: provides information on the current version of the application

Via the Help menu you can also access topics which relate to the current dialog situation from every window.

Calling the Online Help

You can call the online help in one of the following ways:

- Select a menu command in the Help menu in the menu bar.
- Click the "Help" button in a dialog box. You are then shown help on this dialog box.
- Position the cursor in a window or dialog box on the topic you need help with and press the F1 key or select the menu command **Help > Context-sensitive Help**.
- Use the question mark cursor in Windows.

The last three of these ways of accessing the online help are known as context-sensitive help.

Calling the Quick Help

A quick help on buttons in the toolbar is displayed when you position the cursor on a button and leave it there for a moment.

5.4 Objects and Object Hierarchy

In the same way that the Windows Explorer shows the directory structure of folders and files, the object hierarchy for projects and libraries in STEP 7 is shown in the SIMATIC Manager.

The following figure shows an example of an object hierarchy.

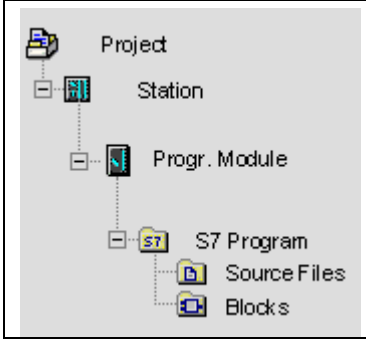	• Project Object • Station Object • Programmable Module Object • S7 Program Object • Source File Folder Object • Block Folder Object

Objects have the following functions:

- Carriers of object properties,
- Folders,
- Carriers of functions (for example, to start a particular application).

Objects as Carriers of Properties

Objects can carry both functions and properties (such as settings). When you select an object, you can perform one of the following functions with it:

- Edit the object using the menu command **Edit > Open Object**.
- Open a dialog box using the menu command **Edit > Object Properties** and set object-specific options.

A folder can also be a carrier of properties.

Objects as Folders

A folder (directory) can contain other folders or objects. These are displayed when you open the folder.

Objects as Carriers of Functions

When you open an object, a window is displayed in which you can edit the object.

An object is either a folder or a carrier of functions. An exception to this is stations: they are both folders (for programmable modules) and carriers of functions (used to configure the hardware).

- If you double-click a station, the objects contained in it are displayed: the programmable modules and the station configuration (station as a folder).
- If you open a station with the menu command **Edit > Open Object**, you can configure this station and assign parameters to it (station as the carrier of a function). The menu command has the same effect as a double-click on the "Hardware" object.

5.4.1 Project Object

The project represents the entirety of all the data and programs in an automation solution, and is located at the top of an object hierarchy.

Position in the Project View

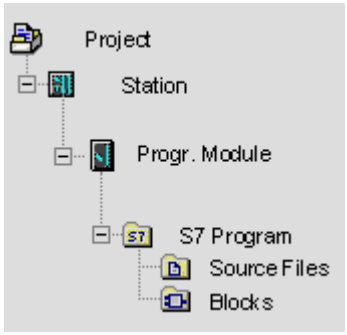	**Project Object** **Station Object** **Programmable Module Object** **S7 Program Object** **Source File Folder Object** **Block Folder Object**

Symbol	Object Folder	Selection of Important Functions
	Project	• Creating a Project • Archiving Projects and Libraries • Printing Project Documentation • Managing Multilingual Texts • Checking Projects for Optional Packages Used • Rearranging • Translating and Editing Operator Related Texts • Inserting Operator Station Objects • More than One User Editing Projects • Converting Version 2 Projects • Setting the PG/PC Interface

Symbol	Objects in the Project Level	Selection of Important Objects
	Station: SIMATIC 300 station SIMATIC 400 station	• Inserting Stations • Stations are both objects (project level) and object folder (station level). Other functions can be found under Station Object
	S7 program	• S7 Program without a Station or CPU • S7 programs are both objects (project level) and object folders (program level). Other functions can be found under S7 Program Object
	Network for starting the tool for network configuration and setting the network properties.	• Properties of Subnets and Communication Nodes • Overview: Global Data Communication • Procedure for Configuring Global Data Communication

5.4.2 Library Object

A library can contain S7 programs and is used to store blocks. A library is located at the top of an object hierarchy.

	• **Library Object** • S7 Program Object • Source File Folder Object • Block Folder Object

Symbol	Object Folder	Selection of Important Functions
	Library	• Overview of the Standard Libraries • Working with Libraries • Archiving Projects and Libraries

Symbol	Objects in the Library Level	Selection of Important Functions
	S7 program	• Inserting an S7 Program • S7 programs are both objects (project level) and object folders (program level). Other functions can be found under S7 Program Object

5.4.3 Station Object

A SIMATIC 300/400 station represents a S7 hardware configuration with one or more programmable modules.

Position in the Project View

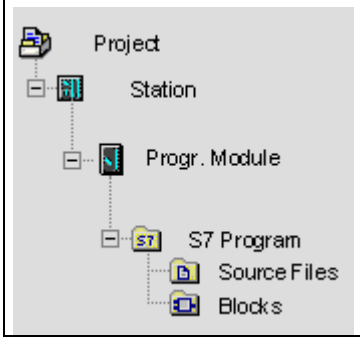	• Project Object • **Station Object** • Programmable Module Object • S7 Program Object • Source File Folder Object • Block Folder Object

Symbol	Object Folder	Selection of Important Functions
	Station	• Inserting a Station • Uploading a Station • Downloading a Configuration to a Programmable Controller • Uploading a Configuration from a Station • Displaying CPU Messages and User-Defined Diagnostic Messages • Configuring the 'Reporting of System Errors' • Diagnosing Hardware and Displaying Module Information • Displaying and Changing the Operating Mode • Displaying and Setting the Time and Date • Erasing the Load/Work Memory and Resetting the CPU
	SIMATIC PC Station (Not assigned)	• Creating and Assigning Parameters to SIMATIC PC Stations • Configuring Connections for a SIMATIC PC Station • Uploading a SIMATIC PC Station
	SIMATIC PC Station (Assigned)	• Highlighting the SIMATIC PC Station to be Configured in the Network View

Symbol	Objects in the Station Level	Selection of Important Functions
	Hardware	• Basic Procedure for Configuring Hardware • Basic Steps for Configuring a Station • Overview: Procedure for Configuring and Assigning Parameters to a Local Configuration • Basic Procedure for Configuring a DP Master System • Configuring Multicomputing Operation
	Programmable module	• Programmable modules are both objects (station level) and object folders ("Programmable Modules" level). Other functions can be found under Programmable Module Object

5.4.4 Programmable Module Object

A programmable module represents the parameter assignment data of a programmable module (CPUxxx, FMxxx, CPxxx). The system data of modules with no retentive memory (for example, CP441) are loaded via the CPU of the station. For this reason, no "system data" object is assigned to such modules and they are not displayed in the project hierarchy.

Position in the Project View

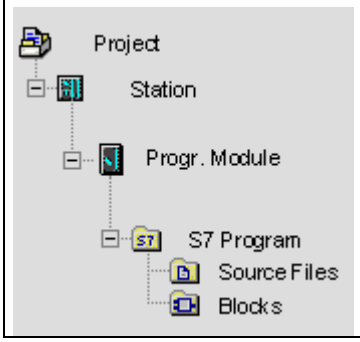	• Project Object • Station Object • **Programmable Module Object** • S7 Program Object • Source File Folder Object • Block Folder Object

Symbol	Object Folder	Selection of Important Functions
	Programmable module	• Overview: Procedure for Configuring and Assigning Parameters to a Local Configuration • Displaying CPU Messages and User-Defined Diagnostic Messages • Configuring 'Reporting of System Errors' • Diagnosing Hardware and Displaying Module Information • Downloading via EPROM Memory Cards • Password Protection for Access to Programmable Controllers • Displaying the Force Values Window • Displaying and Changing the Operating Mode • Displaying and Setting the Time and Date • Setting the Operating Behavior • Erasing the Load/Work Memory and Resetting the CPU • Diagnostics Symbols in the Online View • Division of the Memory Areas • Saving Downloaded Blocks on Integrated EPROM • Updating the Operating System on the Programmable Logic Controller
	Object representing a programmable module	• Displaying Modules Configured with Later STEP 7 Versions

Symbol	Objects in the "Programmable Modules" level	Selection of Important Functions
	Programs: S7 program Program	• Inserting an S7 Program • S7 programs are both objects (project level) and object folders (program level). Other functions can be found under S7 Program Object
	Connections for defining connections within the network	• Networking Stations within a Project • Connection Types and Connection Partners • What You Should Know About the Different Connection Types • Entering a New Connection • Configuring Connections for Modules in a SIMATIC Station

5.4.5 S7 Program Object

A S7 program folder contains software for S7 CPU modules or software for non-CPU modules (for example, programmable CP or FM modules).

Position in the Project View

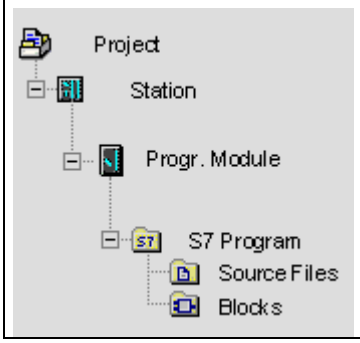	• Project Object • Station Object • Programmable Module Object • **S7 Program Object** • Source File Folder Object • Block Folder Object

Symbol	Object Folder	Selection of Important Functions
	S7 Program	• Inserting an S7-Program • Setting the Address Priority • Basic Procedure for Creating Logic Blocks • Assigning Message Numbers • How to Assign and Edit User-Specific Diagnostics Messages (Project-Oriented) • How to Assign and Edit User-Specific Diagnostics Messages (CPU-Oriented) • Translating and Editing Operator Related Texts • Managing Multilingual Texts • Displaying CPU Messages and User-Defined Diagnostic Messages • Program Measures for Handling Errors
	Program	• Creating the Software in the Project (General)

Symbol	Objects in the Program Level	Selection of Important Functions
	Source file folder	• Other functions can be found under Source File Folder Object
	Block folder	• Other functions can be found under Block Folder Object
	Text libraries folder	• User Text Libraries
	Symbol table for assigning symbols to signals and other variables	• Absolute and Symbolic Addressing • Structure and Components of the Symbol Table • Entering Shared Symbols • General Tips on Entering Symbols • How to Assign and Edit Symbol-Related Messages (Project-Oriented) • How to Assign and Edit Symbol-Related Messages (CPU-Oriented) • Translating and Editing Operator Related Texts • Configuring Operator Control and Monitoring Attributes via the Symbol Table • Editing the Communication Attribute • Exporting and Importing Symbol Tables

5.4.6 Block Folder Object

A block folder of an offline view can contain: logic blocks (OB, FB, FC, SFB, SFC), data blocks (DB), user-defined data types (UDT) and variable tables. The system data object represents system data blocks.

The block folder of an online view contains the executable program parts that have been downloaded to the programmable controller.

Position in the Project View

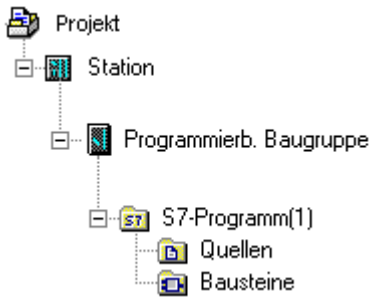	• Project Object • Station Object • Programmable Module Object • S7 Program Object • Source File Folder Object • Block Folder Object

Symbol	Object Folder	Selection of Important Functions
	Blocks	• Downloading with Project Management • Downloading without Project Management • Overview of the Available Reference Data • Rewiring • Comparing Blocks • Translating and Editing Operator Related Texts • Jumps to Language Descriptions and Help on Blocks, System Attributes

Symbol	Objects in the Block Folder	Selection of Important Functions
	Blocks in general	• Basic Procedure for Creating Logic Blocks • Creating Blocks • Basic Information on Programming in STL Source Files • Comparing Blocks
	Organization Block (OB)	Additional Functions: • Introduction to Data Types and Parameter Types • Requirements for Downloading • Testing using Program Status • What You Should Know About Testing in Single-Step Mode/Breakpoints • Rewiring • Help on Blocks

Symbol	Objects in the Block Folder	Selection of Important Functions
	Function (FC)	Additional Functions: • Introduction to Data Types and Parameter Types • Requirements for Downloading • Testing using Program Status • What You Should Know About Testing in Single-Step Mode/Breakpoints • Rewiring • Attributes for Blocks and Parameters
	Function Block (FB)	Additional Functions: • Introduction to Data Types and Parameter Types • Using Multiple Instances • Requirements for Downloading • Testing Using Program Status • What You Should Know about Testing in Single-Step Mode/Breakpoints • Rewiring • Attributes for Blocks and Parameters • How to Assign and Edit Block-Related Messages (Project-Oriented) • How to Create Block-Related Messages (CPU-Oriented) • How to Configure PCS 7 Messages (Project-Oriented) • How to Configure PCS 7 Messages (CPU-Oriented) • Translating and Editing Operator Related Texts • Assigning Monitor/Control Attributes to Function Block Parameters
	User-Defined Data Type (UDT)	• Creating Blocks • Basic Information on Programming in STL Source Files • Introduction to Data Types and Parameter Types • Using User-Defined Data Types to Access Data • Attributes for Blocks and Parameters
	DB (Global Data Blocks)	• Data View of Data Blocks • Declaration View of Data Blocks • Requirements for Downloading • Program Status of Data Blocks • Introduction to Data Types and Parameter Types • Using Multiple Instances • Attributes for Blocks and Parameters • How to Assign and Edit Block-Related Messages (Project-Oriented) (Instance DBs Only) • How to Assign and Edit Block-Related Messages (CPU-Oriented) (Instance DBs Only) • How to Configure PCS7 Messages (Project-Oriented) (Instance DBs Only) • How to Configure PCS7 Messages (CPU-Oriented) (Instance DBs Only) • Translating and Editing Operator Related Texts (Instance Data Blocks Only)
	System Function (SFC)	• Requirements for Downloading • Attributes for Blocks and Parameters • Help on Blocks

Symbol	Objects in the Block Folder	Selection of Important Functions
	SFB (System Function Blocks)	• Requirements for Downloading • Attributes for Blocks and Parameters • How to Assign and Edit Block-Related Messages (Project-Oriented) • How to Create Block-Related Messages (CPU-Oriented) • How to Configure PCS7 Messages (Project-Oriented) • How to Configure PCS7 Messages (CPU-Oriented) • Translating and Editing Operator Related Texts • Help on Blocks
	Block with KNOW HOW protection	• Rules for Defining Block Properties in STL Sources • Block Properties
	Diagnostic-capable block	Additional information is available in the documentation for the S7-PDIAG optional package.
	Block was created with the F-FBD/-LAD/-STL/-DB programming language	Additional information is available in the documentation for the S7 Distributed Safety optional package.
	Variable Table (VAT)	• Basic Procedure when Monitoring and Modifying with the Variable Table • Introduction to Testing with the Variable Table • Introduction to Monitoring Variables • Introduction to Modifying Variables • Introduction to Forcing Variables
	System Data Block (SDB)	System data blocks (SDBs) are only edited indirectly via functions: • Introduction to Configuring Hardware • Properties of Subnets and Communication Nodes • Overview: Global Data Communication • Assigning and Editing Symbol-Related Messages • Requirements for Downloading

5.4.7 Source File Folder Object

A source file folder contains source programs in text format.

Position in the Project View

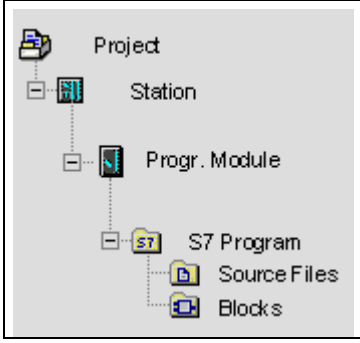	• Project Object • Station Object • Programmable Module Object • S7 Program Object • **Source File Folder Object** • Block Folder Object

Symbol	Object Folder	Selection of Important Functions
	Source File Folder	• Basic Information on Programming in STL Source Files • Exporting Source Files • Importing Source Files

Symbol	Objects in Source File Folder	Selection of Important Functions
	Source file (for example, STL source file)	• Basic Information on Programming in STL Source Files • Creating STL Source Files • Inserting Block Templates in STL Source Files • Inserting Source Code from Existing Blocks in STL Source Files • Checking Consistency in STL Source Files • Compiling STL Source Files • Generating STL Source Files from Blocks • Exporting Source Files • Importing Source Files
	Network template	• Working with Network Templates

5.4.8 S7 Program without a Station or CPU

You can create programs without having configured a SIMATIC station beforehand. This means that you can initially work independently of the module and module settings you intend to program.

Creating an S7 Program

1. Open the relevant project using the menu command **File > Open** or activate the project window.
2. Select the project in the project window of the offline view.
3. Select the menu commands **Insert > Program > S7 Program**.
   The S7 program is added and arranged directly below the project in the project window. It contains a folder for the blocks and an empty symbol table. You can now create and program blocks.

Assigning a Program to a Programmable Module

When you insert programs that are not dependent on a particular module, you can easily assign them to a module later on by copying or moving these programs to the module symbol using the drag and drop function.

Adding a Program to a Library

If the program is to be used for a SIMATIC S7 programmable controller and you want to use it many times as a "software pool," you can also insert it in a library. However, when testing, the programs must lie directly under a project, because this is the only way in which to establish a connection to the programmable controller.

Accessing a Programmable Controller

Select the online view of the project. You can make the address settings in the dialog box containing the program properties.

Note

When deleting stations or programmable modules, you will be asked if you also want to delete the program contained within. If you choose not to delete the program, it will be attached directly below the project as a program without a station.

5.5 User Interface and Operation

5.5.1 Operating Philosophy

The aim: Easy Operation

It is the aim of the graphic user interface to provide maximum and intuitive operating comfort. You will therefore find objects you already know from your daily work, e.g. stations, modules, programs, blocks.

Actions you perform under STEP 7 include the creation, selection and manipulation of such objects.

Differences to Tool-Based Operation

When starting work with conventional tools, the first thing you have to do is to choose the appropriate tool for a specific solution and then call this tool.

The basic procedure of object-oriented operation is to select an object and then open it for editing.

Object oriented operation does not require knowledge of special instruction syntax. On the GUI, icons you can open via menu command or mouse click represent objects.

When you open an object, the application automatically calls the appropriate software component for displaying or editing the content of the object.

Continue ...

Below we describe the basic actions for editing objects. Please pay proper attention to this topic, as all subsequent topics will be based on these basic operations.

5.5.2 Window Arrangement

The standard components of a window are shown in the following figure:

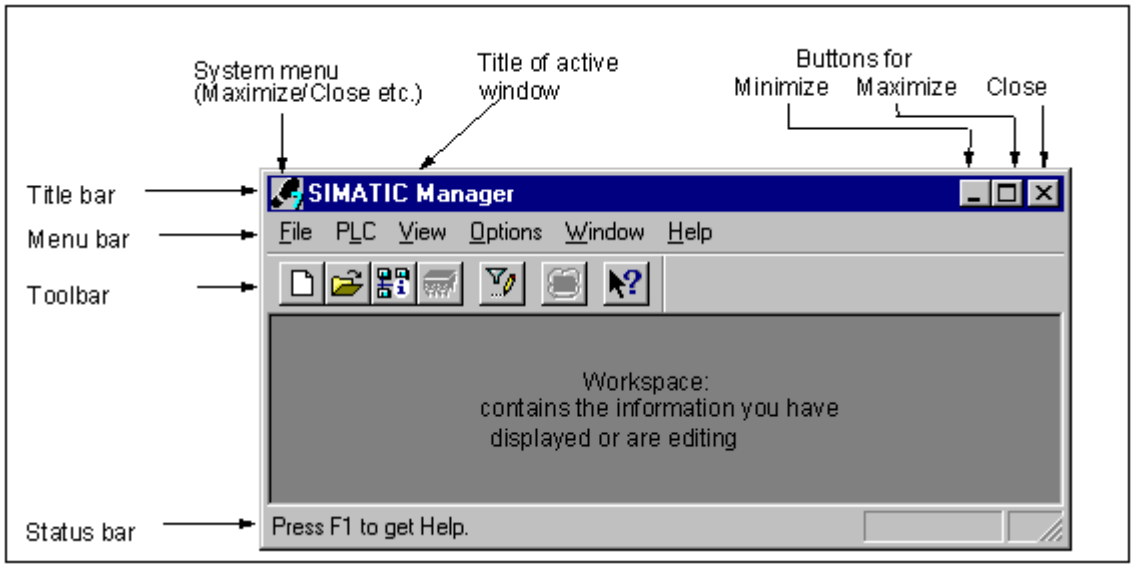

Title Bar and Menu Bar

The title bar and menu bar are always found at the top of a window. The title bar contains the title of the window and icons for controlling the window. The menu bar contains all menus available in the window.

Toolbar

The toolbar contains icons (or tool buttons) which provide shortcuts to frequently used and currently available menu bar commands available with a single mouse click. A brief description of the function of the respective button is displayed together with additional information in the status bar when you position the cursor briefly on the button.

If access to a button is not possible in the current configuration, the button is grayed out.

Status Bar

The status bar displays context-specific information.

5.5.3 Elements in Dialog Boxes

Making Entries in Dialog Boxes

In dialog boxes you can enter information which is required for executing a particular task. The components which appear most frequently in dialog boxes are explained using the example in the following figure.

List Boxes and Combination Boxes

Text boxes sometimes have an arrow pointing downwards beside them. This arrow shows that there are more options available to choose from for this box. Click on the arrow to open a list box or combination box. If you click on an entry in the list, it is automatically displayed in the text box.

Tabs in Dialog Boxes

The content of some dialog boxes is organized using tabs to improve the clarity of the information by dividing the dialog box into tab cards (see figure below).

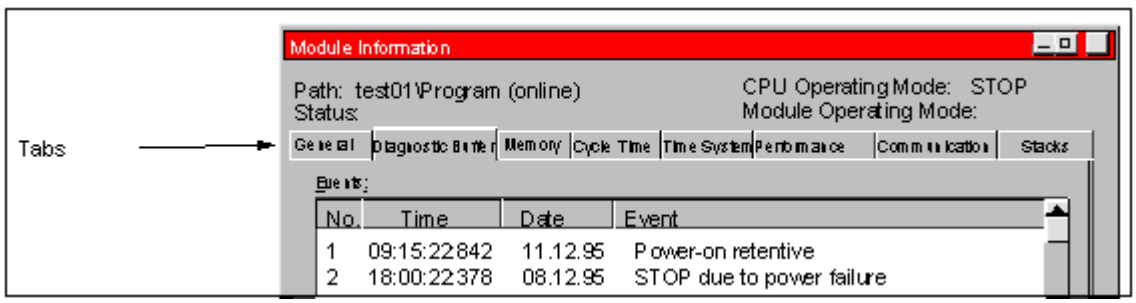

The names of the tab cards are shown on tabs along the top edge of the dialog box. To bring a particular tab card to the foreground, you simply click on its tab.

5.5.4 Creating and Managing Objects

Some basic processing steps are the same for all objects and do not depend on the object type. These standard handling sequences are summarized here. This knowledge of standard procedures is required to move on to other sections in the manual.

The usual sequence of steps when handling objects is:

- Create an object
- Select an object
- Perform actions with the object (for example, copy, delete).

Setting the Path to Create New Projects/Libraries

New user projects, libraries and multiprojects are stored in the default folder "\Siemens\Step7\S7proj". If you want to store them in another folder, you should set your custom path for these objects before you save projects, libraries and multiprojects for the first time. To do this, select the menu command **Options > Customize**. In the "General" tab of the dialog box displayed you can specify the path name under which you want to store new projects or libraries.

Creating Objects

The STEP 7 wizard "New Project" offers support with creating a new project and inserting objects. Use the menu command **File > "New Project" Wizard** to open the wizard. In the dialog boxes displayed you can set the structure of your project and then have the wizard create the project for you.

If you do not wish to use the wizard, you can create projects and libraries using the menu command **File > New**. These objects form the starting point of an object hierarchy. You can create all other objects in the hierarchy using the commands in the Insert menu, provided they are not created automatically. The exception to this are the modules in a SIMATIC station which are created when you configure the hardware or by using the "New Project" wizard.

Opening Objects

There are a number of ways to open an object in the detailed view:

- Double-click on the object icon
- Select the object and then the menu command **Edit > Open Object.** This only works for objects that are not folders.

Once you have opened an object, you can create or change its contents.

When you open an object that does not contain other objects, its contents are represented by a suitable software component in a new window for editing purposes. You cannot change objects whose contents are already being used elsewhere.

Note

Exception: Stations appear as folders for programmable modules (when you double-click them) and for the station configuration. If you double-click the "Hardware" object, the application for configuring hardware is started. Selecting the station and selecting the menu command **Edit > Open Object** has the same effect.

Building an Object Hierarchy

Use the "New Project" wizard to create the object hierarchy. When you open a folder, the objects it contains are displayed on the screen. You can now create more objects in the folder using the Insert menu, for example, additional stations in a project. Only the commands for those objects which can be inserted in the current folder are active in the Insert menu.

Setting Object Properties

Object properties are data belonging to the object which determine its behavior. The dialog box for setting object properties appears automatically when you create a new object and properties have to be set. The properties can also be changed at a later date.

Using the menu command **Edit > Object Properties**, a dialog box is opened in which you can display or set the properties for the selected object.

Using the menu command **Edit > Special Object Properties**, you can open dialog boxes and enter data required for operator control and monitoring functions and for configuring messages.

For example, in order to display the special object properties of a block for operator control and monitoring, the block must be marked as being relevant for operator control and monitoring, meaning that the system attribute "s7_m_c" must be set to the value "true" in the "Attributes" tab of the block properties.

Note

Properties of the "System Data" folder and the "Hardware" object cannot be displayed or changed.

You cannot write in the dialog boxes for object properties of a read-only project. In this case, the input boxes are grayed out.

If you display the properties of programmable modules, you cannot edit the displayed parameters for reasons of consistency. To edit the parameters you must open the "Configuring Hardware" application.

If you change the settings for objects on the programming device (for example, the configuration data of a module), they are not yet effective in the target system, because the system data blocks in which the settings are saved have to be in the target system.

If you load an entire user program, the system data blocks are also automatically transferred. If you change the settings after having loaded the program, you can reload the "System data" object in order to transfer the settings to the target system.

It is strongly recommended to edit the folders exclusively with STEP 7, since they can be physically structured in a different way than you see in the SIMATIC Manager.

Cutting, Pasting, Copying

Most objects can be cut, pasted, or copied as usual under Windows. The menu commands for these functions are found in the Edit menu.

You can also copy objects by dragging and dropping. If you attempt to move or copy to an illegal destination, the cursor displays a prohibited sign as a warning.

When you copy an object, the whole hierarchy beneath it is also copied. This enables components you create in an automation task to be used again and again.

Note

The connection table in the "Connections" folder cannot be copied. Note that when you copy lists of operator-relevant texts, only those languages installed in the destination object are accepted.

You will find a step-by-step guide to copying under Copying Objects.

Renaming Objects

The SIMATIC Manager assigns standard names to some new objects. These names are generally formed from the type of object (if a number of objects of this type can be created in the same folder) and a number.

For example, the first S7 program will be named "S7 Program(1)", the second "S7 Program(2)" etc. The symbol table is simply called "Symbols" as it can only exist once in each folder.

You can change the names of most objects and assign them names which are more relevant to their content.

With projects, the directory names in the path must not have more than 8 characters. Otherwise, there may be problems when archiving.

You can change the name of an object directly or using the object properties.

Directly:

When you slowly click twice on the name of a selected object, a frame appears around the text. You can then edit the name using the keyboard.

Using the menu:

Select the required object in the project window and select the menu command **Edit > Rename**. A frame appears around the text. You can then edit the name using the keyboard.

If you are not allowed to change the name:

If you are not allowed to change the name of an object, the input field is shown in gray in the dialog box, the current name is displayed, and text entries are not possible.

Note

If you move the mouse pointer out of the name box while editing the name and execute another action (for example, select a menu command), the edit procedure is terminated. The changed name is accepted and entered if it is allowed.

You will find a step-by-step guide to renaming under Renaming Objects.

Moving Objects

With the SIMATIC Manager you can move objects from one folder to another even if the destination is in another project. When you move a folder its contents are all moved as well.

Note

You cannot move the following objects:

- Connections
- System data blocks (SIB) in the online view
- System functions (SFC) and system function blocks (SFB) in the online view

You will find a step-by-step guide to moving under Moving Objects.

Sorting Objects

You can sort objects in the detailed view (menu command **View > Details**) according to their attributes. To do this, click on the corresponding header of the required attribute. When you click again, the sort order is reversed. Blocks of one type are sorted according to their numerical order, for example, FB1, FB2, FB11, FB12, FB21, FC1.

Default Sort Order

When you re-open a project, the objects in the detailed view are displayed according to a default sort order. Examples:

- Blocks are shown in the order "System data, OB, FB, FC, DB, DUTY, VAT, SFB, SFC."
- In a project, all stations are shown first and then the S7 programs.

The default is not therefore an alphanumeric ascending or descending sort order in the detailed view.

Restoring the Default Sort Order

After resorting, for example, by clicking on the column header "Object Name," you can restore the default order if you proceed as follows:

- Click the column header "Type" in the detailed view.
- Close the project and open it again.

Deleting Objects

You can delete folders and objects. If you delete a folder, all the objects contained in it are also deleted.

You cannot undo the delete procedure. If you are not sure whether you really no longer need an object, it is better to archive the whole project first.

Note

You cannot delete the following objects:

- Connections
- System data blocks (SIB) in the online view
- System functions (SFC) and system function blocks (SFB) in the online view

You will find a step-by-step guide to deleting under Deleting Objects.

5.5.5 Selecting Objects in a Dialog Box

Selecting objects in a dialog box (browser) is an action which you will need regularly for a large number of different edit steps.

Calling the Browser

You call the browser dialog in the hardware configuration application, for example, using menu commands such as **Station > New/Open** (one exception is the basic application window "SIMATIC Manager").

Structure of a Browser Dialog

In the browser you have the following selection options as shown in the following figure.

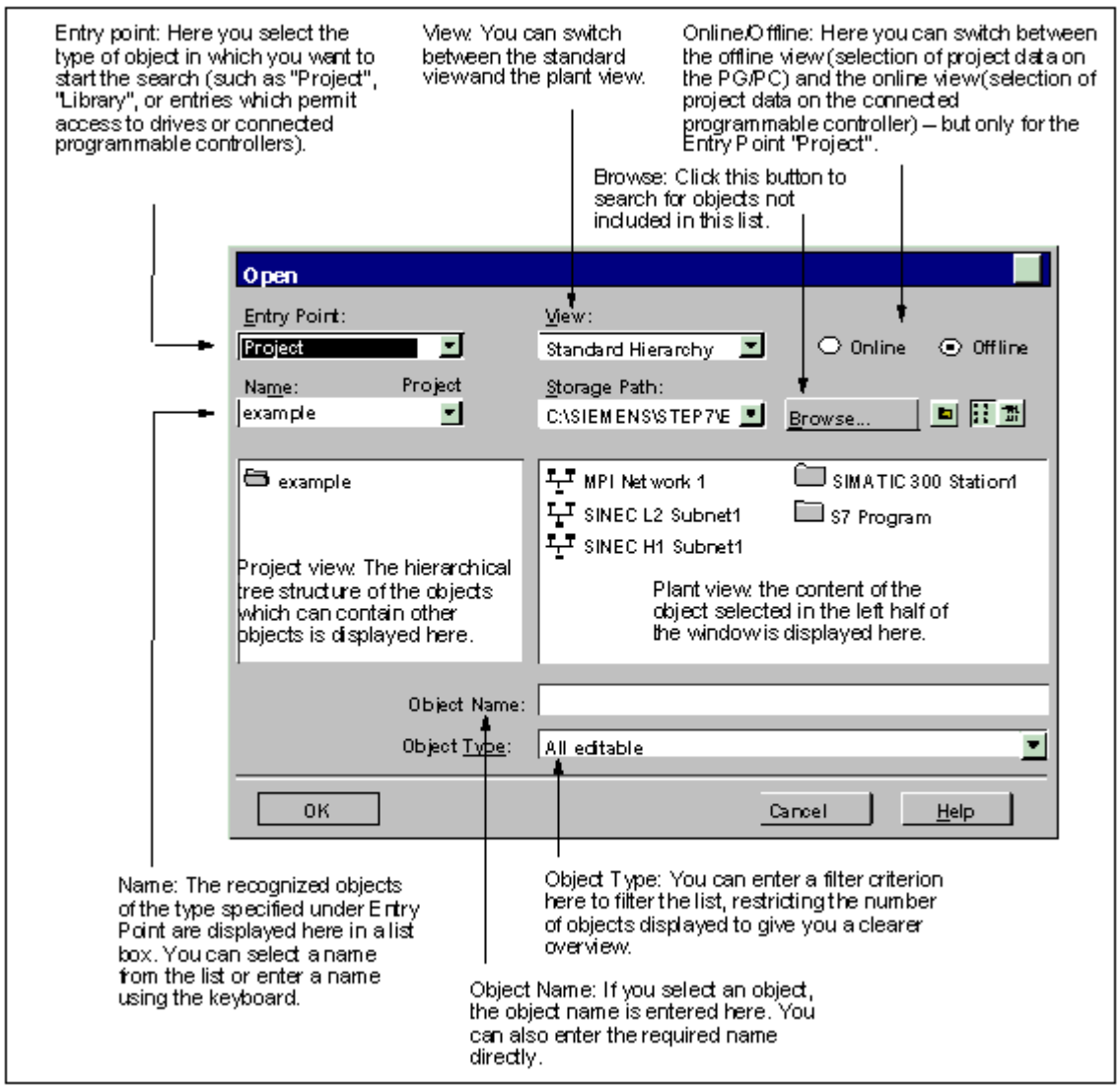

5.5.6 Session Memory

The SIMATIC Manager can save the contents of windows (that is, the projects and libraries open), and the layout of the windows.

- Using the menu command **Options > Customize**, you define whether the window contents and layout are to be saved at the end of a session. At the start of the next session, these window contents and layout are restored. In the open projects, the cursor is positioned on the last folder selected.
- Using the menu command **Window > Save Settings** you save the current window contents and the window arrangement.
- Using the menu command **Window > Restore Settings** you restore the window contents and layout that you saved with the menu command **Window > Save Settings**. In the open projects, the cursor is positioned on the last folder selected.

Note

The window contents of online projects, the contents of the "Accessible Nodes" window, and the contents of the "S7 Memory Card" window are not saved.

Any passwords you may have entered for access to programmable controllers (S7-300/S7-400) are not saved at the end of a session.

5.5.7 Changing the Window Arrangement

To cascade all the displayed windows one behind the other, select one of the following options:

- Select the menu command **Window > Arrange > Cascade**.
- Press the key combination SHIFT + F5.

To arrange all the displayed windows from top to bottom on the screen, select the menu command **Window > Arrange > Horizontally**.

To arrange all the displayed windows from left to right on the screen, select the menu command **Window > Arrange > Vertically**.

5.5.8 Saving and Restoring the Window Arrangement

The STEP 7 applications have a feature which enables you to save the current window arrangement and restore it at a later stage. You can make the setting using the menu command **Options > Customize** in the "General" tab.

What Is Saved?

When you save the window layout the following information is recorded:

- Position of the main window
- Opened projects and libraries and their respective window positions
- Order of any cascaded windows

Note

The window content of online projects, the content of the "Accessible Nodes" window, and the content of the "S7 Memory Card" window are not saved.

Saving the Window Layout

To save the current window arrangement, select the menu command **Window > Save Settings**.

Restoring the Window Layout

To restore the saved window arrangement, select the menu command **Window > Restore Settings**.

Note

When you restore a window, only the part of the hierarchy containing the object that was selected when the window arrangement was saved is displayed in detail.

5.6 Keyboard Operation

5.6.1 Keyboard Control

International Key Names	German Key Names
HOME	POS1
END	ENDE
PAGE UP	BILD AUF
PAGE DOWN	BILD AB
CTRL	STRG
ENTER	Eingabetaste
DEL	ENTF
INSERT	EINFG

5.6.2 Key Combinations for Menu Commands

Every menu command can be selected by typing a key combination with the ALT key.

Press the following keys in the order shown:

- ALT key
- The letter underlined in the menu name you require (for example, ALT, F for the menu "File" - if the menu "File" is included in the menu bar). The menu is opened.
- The letter underlined in the menu command you require (for example, N for the menu command "New"). If the menu command has a submenu, the submenu is also opened. Proceed as above until you have selected the whole menu command by typing the relevant letters.

Once you have entered the last letter in the key combination, the menu command is executed.

Examples:

Menu Command	Key Combination
File > Archive	ALT, F, A
Window > Arrange > Cascade	ALT, W, A, C

Shortcuts for Menu Commands

Command		Shortcut
New	(File Menu)	CTRL+N
Open	(File Menu)	CTRL+O
Save as	("File" Menu)	CTRL+S
Print > Object Table	("File" Menu)	CTRL+P
Print > Object Content	("File" Menu)	CTRL+ALT+P
Exit	("File" Menu)	ALT+F4
Cut	("Edit" Menu)	CTRL+X
Copy	("Edit" Menu)	CTRL+C
Paste	("Edit" Menu)	CTRL+V
Delete	("Edit" Menu)	DEL
Select All	("Edit" Menu)	CTRL+A
Rename	("Edit" Menu)	F2
Object Properties	("Edit" Menu)	ALT+RETURN
Open Object	("Edit" Menu)	CTRL+ALT+O
Compile	("Edit" Menu)	CTRL+B
Download	(PLC Menu)	CTRL+L
Diagnostics/Setting > Module Status	("PLC" Menu)	CTRL+D
Diagnostics/Setting > Operating Mode	("PLC" Menu)	CTRL+I
Update	("View" Menu)	F5
Updates the status display of the visible CPUs in the online view		CTRL+F5
Customize	("Options" Menu)	CTRL+ALT+E
Reference Data > Show	("Options" Menu)	CTRL+ALT+R
Arrange > Cascade	(Window Menu)	SHIFT+F5
Arrange > Horizontally	(Window Menu)	SHIFT+F2
Arrange > Vertically	(Window Menu)	SHIFT+F3
Context-Sensitive Help	(Help Menu)	F1 (If there is a current context, for example, a selected menu command, the relevant help topic is opened. Otherwise the help contents page is displayed.)

5.6.3 Key Combinations for Moving the Cursor

Moving the Cursor in the Menu Bar/Pop-Up Menus

To	Press
move to the menu bar	F10
move to the pop-up menu	SHIFT+F10
move to the menu that contains the letter or number underlined which you typed in	ALT+underlined character in a menu title
select the menu command whose underlined letter or number corresponds to the letter you have typed	Underlined character in the menu command
move one menu command to the left	LEFT ARROW
move one menu command to the right	RIGHT ARROW
move one menu command up	UP ARROW
move one menu command down	DOWN ARROW
activate the selected menu command	ENTER
deselect the menu name or close the open menu and return to the text	ESC

Moving the Cursor When Editing Text

To move	Press
one line up or one character to the left in a text consisting of only one line	UP ARROW
one line down or one character to the right in a text consisting of only one line	DOWN ARROW
one character to the right	RIGHT ARROW
one character to the left	LEFT ARROW
one word to the right	CTRL+RIGHT ARROW
one word to the left	CTRL+LEFT ARROW
to the beginning of the line	HOME
to the end of the line	END
to the previous screen	PAGE UP
to the next screen	PAGE DOWN
to the beginning of the text	CTRL+HOME
to the end of the text	CTRL+END

Moving the Cursor When Editing Tables

To move	Press
One row up	UP ARROW
One row down	DOWN ARROW
One character or cell to the left	RIGHT ARROW
One character or cell to the right	LEFT ARROW
To the beginning of the row	CTRL+RIGHT ARROW
To the end of the row	CTRL+LEFT ARROW
To the beginning of the cell	HOME
To the end of the cell	END
To the previous screen	PAGE-UP
To the next screen	PAGE-DOWN
To the beginning of the table	CTRL+HOME
To the end of the table	CTRL+END
In the symbol table only: to the "Symbol" column	SHIFT+HOME
In the symbol table only: to the "Comment" column	SHIFT+END

Moving the Cursor in Dialog Boxes

To	Press
move from one input box to the next (from left to right and from top to bottom)	TAB
move one input box in the reverse direction	SHIFT+TAB
move to the input box or option that contains the letter or number underlined which you typed in	ALT+underlined character in a menu title
select in a list of options	an arrow key
open a list of options	ALT+DOWN ARROW
select or deselect an item in a list	SPACEBAR
confirm the entries and close the dialog box ("OK" button)	ENTER
close the dialog box without saving the changes ("Cancel" button)	ESC

5.6.4 Key Combinations for Selecting Text

To select or deselect text	Press
one character at a time to the right	SHIFT+RIGHT ARROW
one character to the left	SHIFT+LEFT ARROW
to the beginning of a comment line	SHIFT+HOME
to the end of a comment line	SHIFT+END
one row in a table	SHIFT+SPACE
one line of text up	SHIFT+UP ARROW
one line of text down	SHIFT+DOWN ARROW
to the previous screen	SHIFT+PAGE UP
to the next screen	SHIFT+PAGE DOWN
the text to the beginning of the file	CTRL+SHIFT+HOME
the text to the end of the file	CTRL+SHIFT+END

5.6.5 Key Combinations for Access to Online Help

To	Press
open the Help	F1 (If there is a current context, for example, a selected menu command, the relevant help topic is opened. Otherwise the help contents page is displayed.)
activate the question mark symbol for context-sensitive help	SHIFT+F1
close the Help window and return to the application	ALT+F4

5.6.6 Key Combinations for Toggling between Windows

To	Press
toggle between the panes in a window	F6
return to the previous pane, if there is no dockable window	Shift+F6
toggle between the document window and a dockable window in the document (for example, variable declaration window). If there are no dockable windows, you can use this key combination to return to the previous pane.	Shift+F6
toggle between document windows	Ctrl+F6
return to the previous document window	Shift+Ctrl+F6
toggle between non-document windows (application framework and dockable windows in the application framework; when you return to the framework, this key combination activates the document window that was last active)	Alt+F6
return to the previous non-document window	Shift+Alt+F6
close the active window	Ctrl+F4

6 Setting Up and Editing the Project

6.1 Project Structure

Projects are used to store the data and programs which are created when you put together an automation solution. The data collected together in a project include:

- Configuration data on the hardware structure and parameters for modules,
- Configuration data for communication in networks, and
- Programs for programmable modules.

The main task when you create a project is preparing these data for programming.

Data are stored in a project in object form. The objects in a project are arranged in a tree structure (project hierarchy). The display of the hierarchy in the project window is similar to that of the Windows Explorer. Only the object icons have a different appearance.

The top end of the project hierarchy is structured as follows:

1. 1st Level: Project
2. 2nd Level: Subnets, stations, or S7 programs
3. 3rd Level: depends on the object in level 2.

Project Window

The project window is split into two halves. The left half shows the tree structure of the project. The right half shows the objects that are contained in the object open in the left half in the selected view (large symbols, small symbols, list, or details).

Click in the left half of the window on the box containing a plus sign to display the full tree structure of the project. The resulting structure will look something like the following figure.

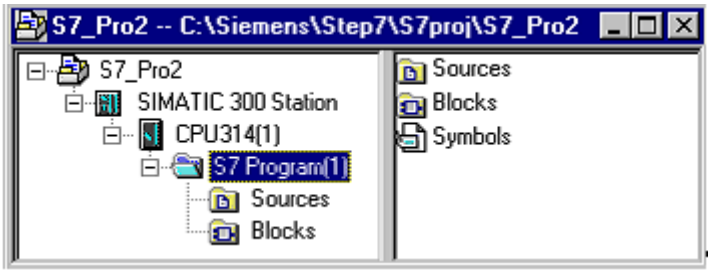

At the top of the object hierarchy is the object "S7_Pro1" as the icon for the whole project. It can be used to display the project properties and serves as a folder for networks (for configuring networks), stations (for configuring the hardware), and for S7 programs (for creating software). The objects in the project are displayed in the right half of the project window when you select the project icon. The objects at the top of this type of object hierarchy (libraries as well as projects) form the starting point in dialog boxes used to select objects.

Project View

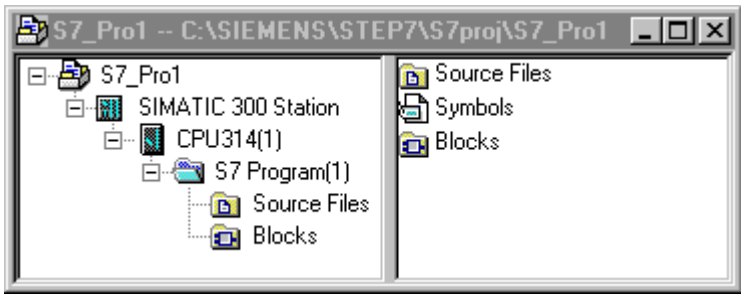

You can display the project structure for the data available on the programming device in the component view "offline" and for the data available on the programmable control system in the component view "online" in project windows.

An additional view you can set is available if the respective optional package is installed: the plant view.

Note

Configuring hardware and networks can only be done in the "offline" view.

6.2 What You Should Know About Access Protection

As of STEP 7 V5.4, you have the option of restricting access to projects and libraries by assigning a project password. This functionality is available only if SIMATIC Logon is installed.

You can also enable, disable and display a change log.

If SIMATIC Logon is installed on your computer, the following dynamic menu commands are available in the SIMATIC Manager. You can use these commands to manage access protection for a project or library:

- Access Protection, Enable
- Access Protection, Disable
- Access Protection, Manage
- Access Protection, Adjust in Multiproject
- Remove Access Protection and Change Log

You activate access protection in SIMATIC Manager with the menu command **Options > Access Protection > Enable**. If you enable access protection for the first time with this menu command, a dialog opens in which you will need to log on with SIMATIC Logon. You will then be prompted to assign a project password. The relevant project or library can then only be edited by an authenticated user or after entering the project password.

The **Remove Access Protection and Change Log** menu command removes access protection as well as the change log for a password-protected project or library. After removing the access protection, you can once again edit projects with a STEP 7 version prior to V5.4.

Opening and Closing Access-protected Projects

The following situations can be distinguished:

	PC with STEP 7 and SIMATIC Logon	**PC with STEP 7 and SIMATIC Logon**	**PC with STEP 7 (no SIMATIC Logon present)**
1.	The user logs on using SIMATIC Logon with a user name and password.	The project with access protection is opened by another user.	The user opens the access-protected project by entering the project password.
2.	The project with access protection is opened.		Editing of the project is possible, however without the functions of SIMATIC Logon.
3.	The project is edited.	The project is edited.	After closing and reopening the project, users must authenticate themselves again with the project password.
4.	Closing the project does **not** mean logging off in SIMATIC Logon.	Closing the project does **not** mean logging off in SIMATIC Logon.	
5.	The user must log off with **Options > SIMATIC Logon Services > "Log Off"** button.		

Note

To disable access protection, you must be authorized in SIMATIC Logon as project administrator.

The first time you enable access protection, the project format is changed. You will receive a message indicating that the modified project can no longer be edited with older STEP 7 versions.

The **Options > Access Protection >Remove Access Protection and Change Log** function allows the project or the library to be used with a STEP 7 version lower than V5.4. You do, however, lose the information on the users that are allowed access to this project or library and all change logs.

The user currently logged on is displayed in the status bar of the SIMATIC Manager.

The currently logged on Logon user who enables access protection is entered as the project administrator and is requested to assign the project password the first time access protection is enabled.

To open an access protected project, you must be authenticated in SIMATIC Logon as project administrator or project user or you must know the password.

Remember that a logged-on user is entered in the project as project administrator when a project is opened with the project password.

If the project/library access protection is active, the icon has a red key. If the multiproject only contains projects/libraries with active access protection, the icon also has a red key.

If the project/library access protection is disabled, the icon has a white key. If the multiproject contains projects/libraries both with active and deactivated access protection or projects/libraries with deactivated access protection, the icon is also displayed with a white key.

6.3 What You Should Know About The Change Log

As of STEP 7 V5.4, after setting up access protection for projects and libraries, you have the option of keeping a change log that records online actions.

Examples include:

- Activate / deactivate / configure the access protection and change log
- Open / close projects and libraries
- Download to PLC (system data)
- Selected operations for loading and copying blocks
- Activities for changing the operating mode
- Clear/reset

You can display the change log and enter comments such as those explaining changes that you have made. This functionality is available only if SIMATIC Logon is installed.

To enable the change log, go to the SIMATIC Manager and select the menu command **Options > Change Log > Enable**. After you have enabled the change log, your can view it with the appropriate menu command or disable it again.

Depending on the object you have selected in the project structure (for example project folder or lower-level station), the corresponding change log is displayed.

Note

The **Options > Access Protection >Remove Access Protection and Change Log** function allows the project or the library to be used with a STEP 7 version lower than V5.4. You do, however, lose the information on the users that are allowed access to this project or library and all change logs.

To use this function, you must be authenticated in SIMATIC Logon as project administrator and access protection must be enabled for this project.

6.4 Using Foreign-Language Character Sets

As of STEP 7 V5.3 SP2, you can enter texts in foreign languages in projects and libraries even if these languages do not match the language that has been set for STEP 7. To do this, the corresponding Windows language must be set in the Control Panel of the operating system. This makes it possible, for example, to operate STEP 7 in the STEP 7 language English on a Chinese-language version of Windows but still allows Chinese text be entered.

In this case, the following types and options for language settings must be distinguished:

Windows Language Setting

This setting is made in the Windows Control Panel. Texts pertaining to the operating system are displayed in the language selected, and you can enter texts in foreign-language character strings.

Project Language

The project language is the language that is set in the Window Control Panel when a project is first created. Once chosen, this project language cannot be changed. However, with the "language-neutral" setting it is still possible to open a project on computers with other language settings in Windows. Before changing the project language to "language-neutral", make sure that only characters from the English-language character set (ASCII characters 0x2a - 0x7f) were previously used in the project when entering text.

To find out the project language for a project or a library, select the **Edit > Object Properties** menu command. In the dialog box that is then displayed you can also select the "Can be opened under any Windows language setting (language-neutral)" option.

STEP 7 Language

The STEP 7 language is the one that you set in the SIMATIC Manager by using the **Options > Customize** menu command. This language is the one use for interface elements, menu command, dialog boxes and error messages in STEP 7.

If you are using another Windows language such as German, English, French, Italian or Spanish, you can ensure that the STEP 7 interface is correctly displayed by selecting English as the STEP 7 language.

Rules

If you will be editing your projects or libraries on computers that have different language settings, be sure to observe the following "rules and regulations" to prevent incompatibilities or data corruption from occurring when using a foreign-language character set:

- Install STEP 7 only in folders with names that contain the characters of the English character set (ASCII characters 0x2a - 0x7f).
- Only use project names and project paths with names that contain the characters of the English character set (ASCII characters 0x2a - 0x7f). For example, if you use German umlauts, Cyrillic or Chinese characters, then the project can only be opened on computers that have a compatible language setting in Windows.
- In multiprojects, only use projects and libraries with the same project language or those that are identified as being language-neutral ones. The multiproject itself is language-neutral.

- When creating libraries, always make them language-neutral to ensure than they can be used on computers with different Windows language settings. When assigning names to library projects, entering comments, or creating symbol names, etc. be sure to only use ASCII characters (0x2a - 0x7f) so that the libraries can be used without any problems.
- When importing/exporting hardware configurations or symbol tables, make sure that you only import/export language-compatible files.
- In the names of user-defined attributes, use only characters from the English-language character set (ASCII characters 0x2a - 0x7f).
- If, in an STL source, you are using characters that are not in the English character set (ASCII characters 0x2a - 0x7f) for the TITLE, AUTHOR, FAMILY block properties, then place these entries in single quote marks.

Notes

If you change or copy projects or libraries that were created on a computer that is identified as being language-neutral with respect to the Windows language setting but is not compatible with the setting on the computer currently being used, data corruption may occur if characters that are not contained in the English character set (ASCII characters 0x2a - 0x7f) were used in the project or library.
For this reason, before editing "foreign" projects or libraries, make sure to check whether the Windows language setting on your computer matches the project language.

If you export hardware configurations or symbol tables that are to be imported in another Windows language setting, make sure that only characters from the English-language character set (ASCII characters 0x2a - 0x7f) were previously used and that no other language-specific characters such as German umlauts, Japanese characters or Cyrillic characters are present.

Exported hardware configurations or symbol tables that contain language-specific characters such as German umlauts, Japanese characters or Cyrillic characters may only be imported in the same Windows language setting from which they were exported. This means that if you import older symbol tables that might contain such language-specific characters, be sure to check the results carefully: the symbols must be unique, must not contain any question marks or other incorrect characters, and must be plausible.

If symbol tables contain special characters that are not defined in ("known to") the current Windows language setting, then the question marks or other incorrect characters now part of the symbol names may cause problems and errors when sorting by names and comments.

Please note that with symbolic addressing the symbolic names must be written in quotation marks ("<Symbolic Name>").

Basic Procedure

To be able to enter text in foreign-language character sets in projects and libraries, proceed as follows:

1. In the Windows Control Panel, set the language setting to the language desired.
2. Create a project.
3. Enter the text in foreign-language characters.

For project and libraries that were created before STEP 7 V5.3 SP2, the project language is "not yet specified". In this case, you can select the **Edit > Object Properties** menu command to set the project language to the language currently set in Windows. Before doing so, make sure that the project does not contain any characters that are not defined in ("known to") the current Windows language setting.

6.5 Setting the MS Windows Language

To set the Windows language, proceed as follows:

Setting the Language in Windows XP and Windows Server 2003:

1. To set the desired display language for programs that do not support Unicode, select the following menu command sequence:
   Control Panel > Regional and Language Options > Advanced > Language for non-Unicode programs.
2. To set the input language (standard regional settings properties), select the following menu command sequence:
   Control Panel > Regional and Language Options > Languages > Details.
3. To set the input language (standard regional settings properties), select the following menu command sequence:
   Control Panel > Regional and Language Options > Regional Settings (Standards and Formats).

Setting the Language in Windows 7 and Windows Server 2008:

- Using **Control Panel > Clock, Language and Region > Region and Language > Formats > Format**, set the required display language.
- Using **Control Panel > Clock, Language and Region > Region and Language >Keyboards and Languages > Change Keyboards,** add the required input language.
- Using **Control Panel > Clock, Language and Region > Region and Language > Administrative Tools > Change System Locale...**, set the display language for programs that do not support unicode.

You can enter texts in the desired language and display them correctly only after you have made all of these settings.

6.6 Setting Up a Project

6.6.1 Creating a Project

To construct a solution to your automation task using the framework of a project management, you will need to create a new project. The new project is created in the directory you set for projects in the "General" tab when you selected the menu command **Options > Customize**.

Note

The SIMATIC Manager allows names that are longer than eight characters. The name of the project directory is, however, cut off to eight characters. Project names must therefore differ in their first eight characters. The names are not case-sensitive.

You will find a step-by-step guide to creating a project under Creating a Project Manually or under Creating a Project Using the Wizard.

Creating a Project Using the Wizard

The easiest way to create a new project is using the "New Project" wizard. Use the menu command **File > "New Project" Wizard** to open the wizard. The wizard prompts you to enter the required details in dialog boxes and then creates the project for you. In addition to the station, CPU, program folder, source file folder, block folder, and OB1 you can even select existing OBs for error and alarm processing.

The following figure shows an example of a project created with the wizard.

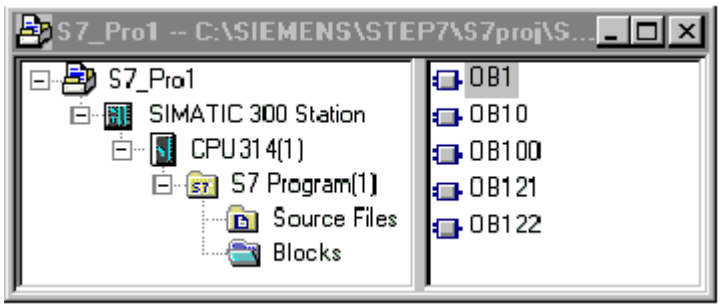

Creating a Project Manually

You can also create a new project using the menu command **File > New** in the SIMATIC Manager. It already contains the "MPI Subnet" object.

Alternative Procedures

When editing a project, you are flexible as to the order in which you perform most of the tasks. Once you have created a project, you can choose one of the following methods:

- First configure the hardware and then create the software for it, or
- Start by creating the software independent of any configured hardware.

Alternative 1: Configure the Hardware First

If you want to configure the hardware first, proceed as described in Volume 2 of the Configuring Hardware with STEP 7 Manual. When you have done this, the "S7 Program" folder required to create software is already inserted. Then continue by inserting the objects required to create programs. Then create the software for the programmable modules.

Alternative 2: Create Software First

You can also create software without first having to configure the hardware; this can be done later. The hardware structure of a station does not have to be set for you to enter your programs.

The basic procedure is as follows:

1. Insert the required software folders (S7 Program without a Station or CPU) in your project.
2. Then create the software for the programmable modules.
3. Configure your hardware.
4. Once you have configured the hardware, you can link the S7 program to a CPU.

6.6.2 Inserting Stations

In a project, the station represents the hardware structure of a programmable controller and contains the data for configuring and assigning parameters to individual modules.

New projects created with the "New Project" wizard already contain a station. Otherwise you can create the station using the menu command **Insert > Station**.

You can choose between the following stations:

- SIMATIC 300 station
- SIMATIC 400 station
- SIMATIC H station
- SIMATIC PC station
- PC/programming device
- SIMATIC S5
- Other stations, meaning non- SIMATIC S7 and SIMATIC S5

The station is inserted with a preset name (for example, SIMATIC 300 Station(1), SIMATIC 300 Station(2), etc.). You can replace the name of the stations with a relevant name, if you wish.

You will find a step-by-step guide to inserting a station under Inserting a Station.

Configure the Hardware

When you configure the hardware you specify the CPU and all the modules in your programmable controller with the aid of a module catalog. You start the hardware configuration application by double-clicking the station.

For each programmable module you create in your configuration, an S7 program and a connection table ("Connections" object) are created automatically once you have saved and exited the hardware configuration. Projects created with the "New Project" wizard already contain these objects.

You will find a step-by-step guide to configuring under Configuring the Hardware, and detailed information under Basic Steps for Configuring a Station.

Creating a Connection Table

An (empty) connection table ("Connections" object) is created automatically for each programmable module. The connection table is used to define communication connections between programmable modules in a network. When it is opened, a window is displayed containing a table in which you define connections between programmable modules.

You will find detailed information under Networking Stations within a Project.

Next Steps

Once you have created the hardware configuration, you can create the software for your programmable modules (Also refer to Inserting a S7 Program).

6.6.3 Inserting an S7 Program

The software for programmable modules is stored in object folders. For SIMATIC S7 modules this object folder is called "S7 Program."

The following figure shows an example of an S7 program in a programmable module in a SIMATIC 300 station.

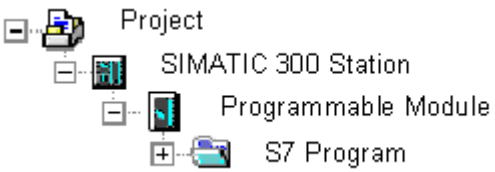

Existing Components

An S7 program is created automatically for each programmable module as a container for the software:

The following objects already exist in a newly created S7 program:

- Symbol table ("Symbols" object)
- "Blocks" folder for containing the first block
- "Source Files" folder for source files

Creating S7 Blocks

You want to create Statement List, Ladder Logic, or Function Block Diagram programs. To do this, select the existing "Blocks" object and then select the menu command **Insert > S7 Block**. In the submenu, you can select the type of block you want to create (such as a data block, User-defined Data Type (UDT), function, function block, organization block, or variable table).

You can now open the (empty) block and start entering the Statement List, Ladder Logic, or Function Block Diagram program. You will find more information on this in Basic Procedure for Creating Logic Blocks and in the Statement List, Ladder Logic, and Function Block Diagram manuals.

Note

The object "System Data" (SDB) which may exist in a user program was created by the system. You can open it, but you cannot make changes to it for reasons of consistency. It is used to make changes to the configuration once you have loaded a program and to download the changes to the programmable controller.

Using Blocks from Standard Libraries

You can also use blocks from the standard libraries supplied with the software to create user programs. You access the libraries using the menu command **File > Open**. You will find further information on using standard libraries and on creating your own libraries in Working with Libraries and in the online help.

Creating Source Files/CFC Charts

You want to create a source file in a particular programming language or a CFC chart. To do this, select the "Source Files" or "Charts" object in the S7 program and then select the menu command **Insert > S7 Software**. In the submenu, you can select the source file that matches your programming language. You can now open the empty source file and start entering your program. You will find more information under Basic Information on Programming in STL Source Files.

Creating a Symbol Table

An (empty) symbol table ("Symbols" object) is created automatically when the S7 program is created. When you open the symbol table, the "Symbol Editor" window opens displaying a symbol table where you can define symbols. You will find more information under Entering Multiple Shared Symbols in the Symbol Table.

Inserting External Source Files

You can create and edit source files with any ASCII editor. You can then import these files into your project and compile them to create individual blocks.

The blocks created when the imported source file is compiled are stored in the "Blocks" folder.

You will find more information under Inserting External Source Files.

6.7 Editing a Project

Opening a Project

To open an existing project, enter the menu command **File > Open**. Then select a project in the dialog boxes that follow. The project window is then opened.

Note

If the project you require is not displayed in the project list, click on the "Browse" button. In the browser you can then search for other projects and include any projects you find in the project list. You can change the entries in the project list using the menu command **File > Manage**.

Copying a Project

You copy a project by saving it under another name using the menu command **File > Save As**.

You copy parts of a project such as stations, programs, blocks etc. using the menu command **Edit > Copy**.

You will find a step-by-step guide to copying a project under Copying a Project and Copying Part of a Project.

Deleting a Project

You delete a project using the menu command **File > Delete**.

You delete parts of a project such as stations, programs, blocks etc. using the menu command **Edit > Delete**.

You will find a step-by-step guide to deleting a project under Deleting a Project and Deleting Part of a Project.

6.7.1 Checking Projects for Software Packages Used

If a project that you are editing contains objects that were created with another software package, this software package is required to edit this project.

No matter what programming device you are using to work with multiprojects, projects or libraries, STEP 7 assists you by showing you what software packages and versions are required to do so.

This information on the software packages required is complete under the following conditions:

- If the project (or all projects in a multiproject) or library was created in STEP 7 as of V5.2.
- If you yourself have checked the project for any software packages used in creating it. To do this, first go to the SIMATIC Manager and select the project concerned. Then select the menu command **Edit > Object Properties**. In the dialog box that is displayed, select the "Required software packages" tab. The information in this tab will tell you whether you should check the project for software packages.

6.7.2 Managing Multilingual Texts

STEP 7 offers the possibility of exporting text that has been created in a project in one language, having it translated, re-importing it, and displaying it in the translated language.

The following text types can be managed in more than one language:

- Titles and comments
  - Block titles and block comments (latter does not apply to PCS 7 projects)
  - Network titles and network comments
  - Line comments from STL programs
  - Comments from symbol tables, variable declaration tables, user-defined data types, and data blocks
  - Comments, state names, and transition names in HiGraph programs
  - Extensions of step names and step comments in S7-Graph programs
- Display texts
  - Message texts generated by STEP 7, S7-Graph, S7-HiGraph, S7-PDIAG or ProTool
  - System text libraries
  - User-specific text libraries
  - Operator-relevant texts
  - User texts

Export

Exporting is done for all blocks and symbol tables located under the selected object. An export file is created for each text type. This file contains a column for the source language and a column for the target language. Text in the source language must not be changed.

Import

During import, the contents of the target-language columns (right-hand column) are integrated into the project to which the selected object belongs. Only those translations whose source text (exported text) matches an existing text in the "Source Language column are accepted.

Note

When you import the translated texts, these texts are replaced in the **entire** project. If, for example, you have translated texts belonging to a certain CPU and these texts occur at other places in the project, **all** the occurrences in the project will be replaced.

Changing Languages

When changing languages, you can choose from all the languages that were specified during import into the selected project. The language change for "Title and Comments" is only applied to the selected object. A language change for "Display Texts" is always applied to the complete project.

Deleting a Language

When a language is deleted all the texts in this language are deleted from the internal database.

One language should always be available as a reference language in your project. This can, for example, be your local language. This language should not be deleted. During exporting and importing always specify this reference language as the source language. The target language can be set as desired.

Reorganize

During reorganization, the language is changed to the language currently set. The currently set language is the language that you selected as the "Language for future blocks". Reorganization only affects titles and comments.

Comment Management

You can specify how comments for blocks should be managed in projects with texts being managed in many languages.

Basic Procedure

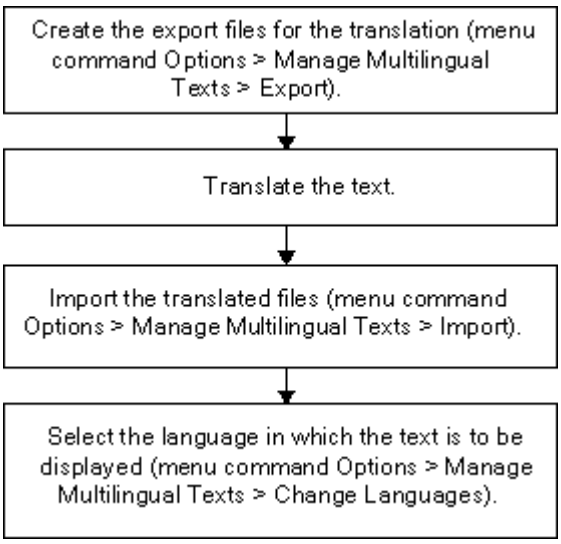

6.7.2.1 Types of Multilingual Texts

For export, a separate file will be created for each type of text. This file will have the text type as its name and the export format as its extension (texttype.format: for example, SymbolComment.CSV or SymbolComment.XLS). Files that do not satisfy the naming convention cannot be used as source or target.

The translatable text within a project is divided into the following text types:

Text Type	**Description**
BlockTitle	Block title
BlockComment	Block comments
NetworkTitle	Network title
NetworkComment	Network comments
LineComment	Line comments in STL
InterfaceComment	Var_Section comments (declaration tables in code blocks) and UDT comments (user-defined data types) and Data block comments
SymbolComment	Symbol comments
S7UserTexts	Texts entered by the user which can be output on display devices
S7SystemTextLibrary	Texts of system libraries which are integrated into messages can be updated dynamically during runtime, and displayed on the PG or other display devices
S7UserTextLibrary	Texts of user libraries which are integrated into messages can be updated dynamically during runtime, and displayed on the PG or other display devices

	S7-HiGraph
HiGraphStateName	State name
HiGraphStateComment	State comment
HiGraphTansitionName	Transition name
HiGraphTransitionComment	Transition comment
	S7-Graph
S7GraphStateName	Step name extension
S7GraphStateComment	Step comment

Editors in other optional packages (such as ProTool, WinCC, etc.) may have other application-specific text types that are not described here.

6.7.2.2 Structure of the Export File

The export file is structured as follows:

Example:

$_Languages		
7(1) English (USA)	9(1) English (USA)	
$_Type(NetworkTitle)		
//Maximum text length: 64 characters		
//$_Export on 16.11.2005 13:14:34		
First character sequence to be translated	Translation	test\S7_Program(1)\Blocks\OB1
Second character sequence to be translated	Translation	test\S7_Program(1)\Blocks\OB1
Character sequence that is not to be displayed in the translation		test\S7_Program(1)\Blocks\OB1

Source Language

Target Language

Fundamentally, the following applies:

1. The following may not be changed, overwritten, or deleted:
   - Fields beginning with "$_" (these are keywords)
   - The numbers for the language (in the example above: 9(1) for the source language English (USA) and 7(1) for the target language German).
2. Each file holds the text for just a single test type. In the example, the text type is NetworkTitle ($_Type(NetworkTitle). The rules for the translator who will edit this file are contained in the introductory text of the export file itself.
3. Additional information regarding the text or comments must always appear before the type definition ($_Type…) or after the last column.

Note

If the column for the target language has been overwritten with "512(32) $_Undefined," no target language was specified when the file was exported. To obtain a better overview, you can replace this text with the target language, for example, "9(1) English (US)" When importing the translated files, you must verify the proposed target language and, if necessary, select the correct language.

You can hide text not to be displayed in the target language by entering the keyword $_hide. This does not apply to comments on variables (InterfaceComment) and to symbols (SymbolComment).

Export File Format

You specify the format in which export files are to be saved.

If you have decided to use CSV format, you must keep in mind when editing in Excel that a CSV file can be only opened properly in Excel if the Open dialog is used. **Opening a CSV file by double-clicking in Explorer often results in an unusable file.** You will find it easier to work with CSV files in Excel if you use the following procedure:

1. Open the export file in Excel
2. Save the files as XLS files
3. Translate the text in the XLS files
4. Save the XLS files in Excel in CSV format.

Note

Export files may not be renamed.

6.7.2.3 Information on the Log File

Error messages and warnings that appear when working with text managed in many languages are output in a log file (TXT format). This file is stored in the same folder as the export files.

In general, the messages are self-explanatory. Any further explanations are listed below:

Warning: The Text 'xyz' in the 'xyz' file already exists. Further occurrences of the text were ignored.

Explanation

Regardless of its language, a text is used as the basis for the translation. If an identical text is used for different terms in more than one language or more than once in one language, it can no longer be uniquely identified and will thus not be translated.

Example:

$_Languages	
7(1) Deutsch (Deutschland)	9(1) English (USA)
kein	none
keine	none
keiner	none

Source language

Target language

This only applies to titles and comments.

Remedy

Rename the texts concerned in the exported file (in the example, a single German word must be used instead of three different ones), and then re-import the texts.

6.7.2.4 Managing User Texts Whose Language Font is Not Installed

You can export user texts whose language font is not installed in your operating system, have them translated and then import them back in and save them for use in your project.

However, such texts can only be displayed on a computer that has the appropriate language font installed on it.

For example, if you have user texts that have to be translated into Russian and do not have a Cyrillic font installed on you operating system, proceed as follows:

1. Export the user text to be translated with the source language "English" and target language "Russian".
2. Send the export files to the translator, who will definitely have a Cyrillic font available.
3. Import the translated export files.
   Result: The project is now available in English and Russian on you computer.
4. Save the whole project and send it to the customer who will use the Russian texts and will thus have a Cyrillic font available to display them.

6.7.2.5 Optimizing the Source for Translation

You can prepare the source material for translation by combining different terms and expressions.

Example

Before preparation (export file):

$_Languages		
9(1) English (USA)	9 (1) English (USA)	
$_Type(SymbolComment)		
Auto-enab.		
Automatic enable		
Auto-enable		

Source Language — Target Language

Combining to a single expression:

$_Languages		
9 (1) English (USA)	9 (1) English (USA)	
$_Type(SymbolComment)		
Auto-enab.	Auto-enable	
Automatic enable	Auto-enable	
Auto-enable	Auto-enable	

Source Language — Target Language

After preparation (that is, after import and subsequent export):

$_Languages		
9 (1) English (USA)	9 (1) English (USA)	
$_Type(SymbolComment)		
Auto-enable	Auto-enable	

Source Language — Target Language

6.7.2.6 Optimizing the Translation Process

If you have projects where the structure and text are similar to a previous project, you can optimize the translation process.

In particular, the following procedure is recommended for projects that were created by copying and then modifying.

Prerequisite

There must be an existing translated export target.

Procedure

1. Copy the export files into the project folder for the new project to be translated.
2. Open the new project and export the text (menu command **Options > Manage Multilingual Texts > Export**). Since the export target already exists, you will be asked whether the export target should be extended or overwritten.
3. Click on the Add button.
4. Have the export files translated (only new text needs to be translated).
5. Then import the translated files.

6.7.2.7 Hiding Texts in Selected Languages

Texts you do not want displayed in the target language can be hidden with the "$_hide" keyword. This does not apply to comments on variables (InterfaceComment) and symbols (SymbolComment).

Example:

$_Languages		
7(1) English (USA)	9(1) English (USA)	
$_Type(NetworkTitle)		
//Maximum text length: 64 characters		
//$_Export on 16.11.2005 13:14:34		
First character sequence to be translated	Translation	test\S7_Program(1)\Blocks\OB1
Second character sequence to be translated	Translation	test\S7_Program(1)\Blocks\OB1
Character sequence that is not to be displayed in the translation		test\S7_Program(1)\Blocks\OB1

Source Language

Target Language

6.7.3 Micro Memory Card (MMC) as a Data Carrier

6.7.3.1 What You Should Know About Micro Memory Cards (MMC)

Micro Memory Cards (MMC) are plug-in memory cards, for example, for a CPU 31xC or an IM 151/CPU (ET 200S). Their most distinguishing feature is the highly compact design.

A new memory concept has been introduced for MMCs. It is briefly described below.

Content of the MMCs

The MMC serves as both the load memory and a data storage device (data carrier).

MMC as Load Memory

The MMCs contain the complete **load memory** for an MMC-compatible CPU. The load memory contains the program with the blocks (OBs, DBs, FCs, ...) as well as the hardware configuration. The contents of the load memory influence the functioning of the CPU. In the MMC's function as load memory, blocks and the hardware configuration with loading functions can be transferred from it (i.e. **Download** to CPU). Blocks downloaded to the CPU take effect immediately; however, the hardware configuration does so only after the CPU is restarted.

Response to Memory Reset

The blocks stored on the MMC are retained after a memory reset.

Loading and Deleting

You can overwrite the blocks on the MMC.

You can erase the blocks on the MMC.

You cannot restore overwritten or erased blocks.

Accessing Data Blocks on the MMC

On the MMC, you can use data blocks and data block contents to handle larger quantities of data or data rather scarcely required in the user program. New system operations are available for that purpose:

- SFC 82: creating data blocks in the load memory
- SFC 83: reading from the data block in the load memory
- SFC 84: writing to a data block in the load memory

MMC and Password Protection

If a CPU (i.e. a CPU in the 300-C family) that is fitted with a Micro Memory Card (MMC) is password-protected, then the user will also be prompted to enter this password when opening this MMC in the SIMATIC Manager (on a programming device/PC).

Displaying Memory Assignment in STEP 7

The display of the load memory assignment in the module status dialog ("Memory" tab) shows both the EPROM and the RAM area.

Blocks on MMCs show a 100% EPROM behavior.

6.7.3.2 Using a Micro Memory Card as a Data Carrier

A SIMATIC Micro Memory Card (MMC) can be used with STEP 7 in the same manner as any other type of external data storage medium.

After you have determined that the MMC has enough capacity to accommodate all the data to be stored, you can transfer any data visible in the operating system's file explorer to the MMC.

In this way, you can make additional drawings, service instructions and functional descriptions pertaining to your plant available to other personnel.

6.7.3.3 Memory Card File

Memory Card files (*.wld) are generated for the

- Software PLC **WinLC** (WinAC Basis and WinAC RTX) and
- SlotPLCs **CPU 41x-2 PCI** (WinAC Slot 412 and WinAC Slot 416).

The blocks and system data for a WinLC or CPU 41x-2 PCI can be saved in a Memory Card file as in an S7-Memory Card. The contents of these files then correspond to the contents of a corresponding Memory Card for a S7-CPU.

This file can then be downloaded by a menu command of the operating panel of the WinLC or CPU 41x-2 PCI into their download memories, corresponding to the downloading of the user program with STEP 7.

In the case of the CPUs 41x-2 PCI this file can be downloaded automatically when the PC operating system is started up, if the CPU 41x-2 PCI is not buffered and is only operated with a RAM Card ("Autoload" function).

Memory Card files are "normal" files in the sense of Windows, which can be moved, deleted or transported with a data medium with the Explorer.

For further information please refer to the corresponding documentation of the WinAC products.

6.7.3.4 Storing Project Data on a Micro Memory Card (MMC)

With STEP 7 you can store the data for your STEP 7 project as well as any other kind of data (such as WORD or Excel files) on a SIMATIC Micro Memory Card (MMC) in a suitable CPU or a programming device (PG)/PC. This allows you to access project data with programming devices that do not have the project saved on them.

Requirements

You can only store project data on an MMC if it is inserted in the slot of a suitable CPU or a programming device (PG)/PC and there is an online connection established.

Be sure that the MMC has enough capacity to accommodate all the data to be stored on it.

Data that can be stored on an MMC

After you have determined that the MMC has enough capacity to accommodate all the data to be stored, you can transfer all data visible in the operating system's file explorer to the MMC. These data can include the following:

- Complete project data for STEP 7
- Station configurations
- Symbol tables
- Blocks and sources
- Texts managed in many languages
- Any other kinds of data, such as WORD or Excel files

7 Editing Projects with Different Versions of STEP 7

7.1 Editing Version 2 Projects and Libraries

Version V5.2 of STEP 7 **no longer** supports **Changes in V2 Projects**. When you edit V2 projects or libraries, inconsistencies can occur such that V2 projects or libraries can no longer be edited with older versions of STEP 7.

In order to continue to edit V2 projects or libraries, a STEP 7 version older that V5.1 must be used.

7.2 Expanding DP Slaves That Were Created with Previous Versions of STEP 7

Constellations That Can Be Formed by Importing New *.GSD Files

New DP slaves can be accepted by the HW Config if you install new device database files (*.GSD files) into the Hardware Catalog. After installation, they are available in the Other Field Devices folder.

You cannot reconfigure or expand a modular DP slave in the usual manner if all of the following conditions exist:

- The slave was configured with a previous version of STEP 7.
- The slave was represented in the Hardware Catalog by a type file rather than a *.GSD file.
- A new *.GSD file was installed over the slave.

Remedy

If you want to use the DP slave with **new modules** that are described in the *.GSD file:

- Delete the DP slave and configure it again. Then the DP slave is described completely by the *.GSD file, not by the type file.

If you do **not want to use any new modules** that are described only in the *.GSD file:

- Under PROFIBUS-DP in the Hardware Catalog window, select the "Other FIELD DEVICES/Compatible PROFIBUS-DP Slaves" folder. STEP 7 moves the "old" type files into this folder when they are replaced by new *.GSD files. In this folder you will find the modules with which you can expand the already configured DP slave.

Constellation after Replacement of Type Files by GSD Files in STEP 7 V5.1 Service Pack 4

As of STEP 7 V5.1, Service Pack 4, the type files have been either updated or largely replaced by GSD files. This replacement only affects the catalog profiles supplied with STEP 7, not any catalog profiles that you may have created yourself.

DP slaves whose properties were previously determined by type files and are now determined by GSD files are still located in the same place in the hardware catalog.

The "old" type files were not deleted but moved to another place in the hardware catalog. They are now located in the catalog folder "**Other field devices\Compatible PROFIBUS DP slaves\...**".

Expanding an Existing DP Configuration with STEP 7, as of V5.1 Service Pack 4

If you edit a project that was created with a previous version of STEP 7 (earlier than V5.1, SP4) and you want to expand a modular DP slave, then you cannot use the modules or submodules taken from the usual place in the hardware catalog. In this case, use the DP slave found at "**Other FIELD DEVICES\Compatible PROFIBUS DP slaves\...**".

Editing a DP Configuration with an Earlier Version of STEP 7 V5.1, SP4)

If you configure an "updated" DP slave with STEP 7 as of V5.1, Service Pack 4 and then edit the project with a previous version of STEP 7 (earlier than STEP 7 V5.1, SP4), you will not be able to edit this DP slave since the GSD file used is unknown to the previous version.

Remedy: You can install the required GSD file in the previous version of STEP 7. In this case, the GSD file is stored in the project. If the project is subsequently edited with the current STEP 7 version will use the newly installed GSD file for the configuration.

7.3 Editing Current Configurations with Previous Versions of STEP 7

Configuring Direct Data Exchange (Lateral Communication)

Configuring direct data exchange with a DP master **without** a DP master system:

- Not possible with STEP 7 V5.0, Service Pack 2 (or older version)
- Possible with STEP 7 V5.0, as of Service Pack 3 and as of STEP 7 V5.1

If you save a DP master without its own DP master system with configured assignments for direct data exchange and you continue to edit this project with an older version of STEP 7 V5 (STEP 7 V5.0, Service Pack 2 (or older)), the following effects can occur:

- A DP master system is displayed with slaves that are used for a STEP 7-internal data storage area of the assignments for direct data exchange. These DP slaves do not belong to the displayed DP master system.
- You cannot connect a new or an orphaned DP master system to this DP master.

Online Connection to the CPU by Means of a PROFIBUS-DP Interface

Configuring the PROFIBUS-DP interface **without** a DP master system:

- STEP 7 V5.0, Service Pack 2 (or older): a connection to the CPU by means of this interface is not possible.
- As of STEP 7 V5.0, Service Pack 3: During compilation, system data for the PROFIBUS-DP interface are generated; a connection to the CPU by means of this interface is possible after downloading.

7.4 Appending SIMATIC PC Configurations of Previous Versions

PC Configurations of STEP 7 V5.1 Projects (up to SP 1)

As of STEP 7 V5.1, Service Pack 2 you can download communications to the PC station in the same way as to an S7-300 or S7-400 station (without having to take the roundabout via configuration file). Nevertheless, a configuration file is always generated during a storing or compiling operation in order to enable the transmission of the configuration to the target PC station using this method.

This bears the consequence that "older" PC stations cannot interpret some of the information included in the newly generated configuration files. STEP 7 automatically adapts itself to this circumstance:

- If you create a **new** SIMATIC PC station configuration with STEP 7 as of V5.1, Service Pack 2, STEP 7 assumes that the target PC station was configured with the help of SIMATIC NET DVD as of 7/2001, that is, under the presumption that S7RTM (Runtime Manager) is installed. The configuration files are generated in such a way that they can be interpreted by a "new" PC station.
- If you append a SIMATIC PC station configuration of a previous version (for example, the PC station was configured with STEP 7 V5.1, Service Pack 1),. STEP 7 does **not** presume that the target PC station was configured with the help of SIMATIC NET DVD as of 7/2001. Those configuration files are then generated in such a way that they can be interpreted by an "old" PC station.

If this default behavior does not match your requirements, you can modify it as described below:

Setting in the Context Menu "Configuring Hardware ":

1. Open the PC station hardware configuration
2. Right-click on the station window (white area)
3. Select the context-sensitive menu "Station Properties"
4. Check or clear the "Compatibility" checkbox.

Setting in the Context Menu "Configuring Networks"

1. Open the network configuration
2. Highlight the PC station
3. Select the menu command **Edit > Object properties**
4. In the dialog, select the "Configuration" tab
5. Check or clear the "Compatibility" checkbox.

PC Configurations of STEP 7 V5.0 Projects

You must convert the station if you want to edit a SIMATIC PC station configuration with STEP 7 as of V5.0, Service Pack 3 to configure new components that are only supported by Service Pack 3 or higher:

1. In the SIMATIC Manager, highlight the SIMATIC PC station and select the menu command **Edit > Object properties**.
2. In the "Functions" tab of the properties dialog, click on the "Expand" button.
   The SIMATIC PC station is then converted. Now, it can only be edited with STEP 7 V5.0, Service Pack 3 or later versions.

7.5 Displaying Modules Configured with Later STEP 7 Versions or Optional Packages

As of STEP 7 V5.1 Service Pack 3, all modules are displayed, even those that were configured with a later STEP 7 version and are thus unknown to the "older" STEP 7. Modules configured with an optional package are also displayed, even if the required corresponding optional package is not installed on the programming device (PG) used to open the given project.

In previous STEP 7 versions, such modules and their subordinate objects were not displayed. In the current version, these objects are visible and can be edited to certain extent. For example, you can use this function to also change user programs, even if the project was created on another computer running a newer version of STEP 7 and the module (such as a CPU) cannot be configured with the existing earlier STEP 7 version because this module has new properties and new parameters.

The module "unknown" to STEP 7 is displayed as a generic, dummy module with the following icon:

If you open the project with the appropriate STEP 7 version or with a compatible optional package, all modules are displayed their standard way and there are no restrictions on editing.

PG with latest STEP 7 / with optional package		**PG with older STEP 7 / without optional package**
	>>>---Project data--->>>	
Represented by "known", latest module		Represents the latest module as an "unknown" module
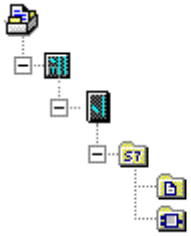		

Working with a Dummy Module in the SIMATIC Manager

The dummy module is visible below the station level. All subordinate objects at this level such as user programs, system data and connection tables are visible and can be downloaded from the SIMATIC Manager.

You also open, edit, compile and load the user program (such as its blocks).

However, the following restrictions apply to projects with dummy blocks:

- You cannot copy a station containing a dummy block.
- In the menu command "Save project as..." the option "with reorganization" cannot be applied completely.
  The dummy module and all references and subordinate objects of these modules will be missing in the copied and reorganized project (for example, the user program).

Working with a Dummy Module in the Hardware Configuration

The dummy module is displayed at the slot where it was configured.

You can open this module, but you cannot change its parameters or download to it. The module properties are limited to those given in the "Dummy" tab property sheet. The station configuration cannot be changed (such as by adding new modules).

Hardware diagnostics (such as opening a station online) are also possible (to a limited extent: new diagnostic options and texts are not recognized.).

Working with a Dummy Module in the Network Configuration

The dummy module is also displayed in NetPro. In this case, the name of the module on the station is preceded by question mark.

A project with a dummy module can only be opened write-protected in NetPro.

If you open the project in write-protected mode, you can display and print the network configuration. You can also obtain the connection status, which will at least contain the information supported by the STEP 7 version being used.

In general, however, you cannot make any changes or save, compile or download them.

Subsequent Installation of Modules

If the module is from a later version of STEP 7 and there is a HW update available for it, you can replace the dummy module with the "real" one. Upon opening the station, you receive information on the necessary HW updates or optional packages, and you can install them using the dialog. As an alternative, you can install the modules from the start menu or in HW Config by selecting the menu command **Options > Install HW Updates**.

8 Defining Symbols

8.1 Absolute and Symbolic Addressing

In a STEP 7 program you work with addresses such as I/O signals, bit memory, counters, timers, data blocks, and function blocks. You can access these addresses in your program absolutely, but your programs will be much easier to read if you use symbols for the addresses (for example, Motor_A_On, or other identifiers according to the code system used within your company or industry). An address in your user program can then be accessed via this symbol.

Absolute Addresses

An absolute address comprises an address identifier and a memory location (for example, Q 4.0, I 1.1, M 2.0, FB21).

Symbolic Addresses

You can make your program easier to read and simplify troubleshooting if you assign symbolic names to the absolute addresses.

STEP 7 can translate the symbolic names into the required absolute addresses automatically. If you would prefer to access ARRAYs, STRUCTs, data blocks, local data, logic blocks, and user-defined data types using symbolic names, you must first assign symbolic names to the absolute addresses before you can address the data symbolically.

You can, for example, assign the symbolic name MOTOR_ON to the address Q 4.0 and then use MOTOR_ON as an address in a program statement. Using symbolic addresses it is easier to recognize to what extent the elements in the program match the components of your process control project.

Note

Two consecutive underline characters (for example, MOTOR__ON) are not permitted in a symbolic name (variable ID).

Support with Programming

In the programming languages Ladder Logic, Function Block Diagram, and Statement List you can enter addresses, parameters, and block names as absolute addresses or as symbols.

Using the menu command **View > Display > Symbolic Representation** you can toggle between the absolute and symbolic representation of addresses.

To make it easier to program using symbolic addresses you can display the absolute address and the symbol comment that belongs with the symbol. You can activate this information using the menu command **View > Display > Symbol Information**. This means that the line comment following every STL statement contains more information. You cannot edit the display; you must make any changes in the symbol table or the variable declaration table.

The following figure shows you the symbol information in STL.

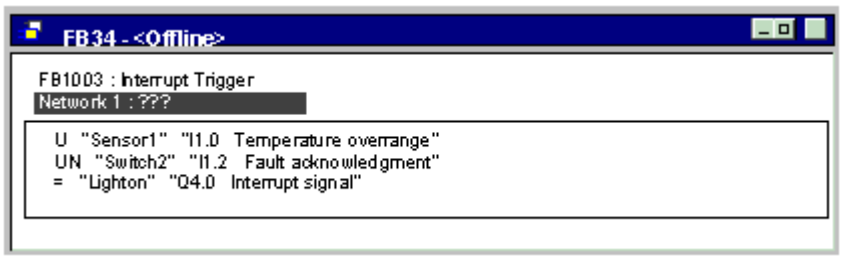

When you print out a block, the current screen representation with statement comments or symbol comments is printed.

8.2 Shared and Local Symbols

A symbol allows you to work with meaningful symbolic names instead of absolute addresses. The combination of short symbols and longer comments can be used effectively to make programming easier and program documentation better.

You should distinguish between local (block-specific) and shared symbols.

	Shared Symbols	**Local Symbols**
Validity	• Is valid in the whole user program, • Can be used by all blocks, • Has the same meaning in all blocks, • Must be unique in the whole user program.	• Only known to the block in which it was defined, • The same symbol can be used in different blocks for different purposes.
Permitted characters	• Letters, numbers, special characters, • Accents other than 0x00, 0xFF, and quotation marks, • The symbol must be placed within quotation marks if you use special characters.	• Letters, • Numbers, • Underscore (_).
Use	• You can define shared symbols for: • I/O signals (I, IB, IW, ID, Q, QB, QW, QD) • I/O inputs and outputs (PI, PQ) • Bit memory (M, MB, MW, MD) • Timers (T)/ counters (C) • Logic blocks (OB, FB, FC, SFB, SFC) • Data blocks (DB) • User-defined data types (UDT) • Variable table (VAT)	• You can define local symbols for: • Block parameters (input, output, and in/out parameters), • Static data of a block, • Temporary data of a block.
Defined where?	Symbol table	Variable declaration table for the block

8.3 Displaying Shared or Local Symbols

You can distinguish between shared and local symbols in the code section of a program as follows:

- Symbols from the symbol table (shared) are shown in quotation marks **"**..**"**.
- Symbols from the variable declaration table of the block (local) are preceded by the character "**#**".

You do not have to enter the quotation marks or the "#". When you enter your program in Ladder, FBD, or STL the syntax check adds these characters automatically.

If you are concerned that there may be some confusion because, for example, the same symbols are used in both the symbol table and the variable declaration, you must code the shared symbol explicitly when you want to use it. Any symbols without the respective coding are interpreted as block-specific (local) variables in this case.

Coding shared symbols is also necessary if the symbol contains blanks.

When programming in an STL source file the same special characters and guidelines for their use apply. Code characters are not added automatically in free-edit mode, but they are still necessary if you wish to avoid confusion.

Note

Using the menu command **View > Display > Symbolic Representation** you can toggle the display between the declared shared symbolic and the absolute addresses.

8.4 Setting the Address Priority (Symbolic/Absolute)

The address priority helps you to adapt the program code as you see fit when making changes in the symbol table, changing parameter names of data blocks or function blocks or when changing UDTs referring to component names or changing multiple instances

When making changes in the following situations, be sure to set the address priority carefully and with a definite purpose in mind. In order for you to benefit from address priority, each change procedure must be completed in itself before you start with another type of change.

To set the address priority, go to the SIMATIC Manager and select the block folder and then select the menu command **Edit > Object Properties**. In the "Address Priority" tab, you can make the settings that you deem appropriate.

Making optimal settings in address priority requires that the following situations for making a change be distinguished:

- Correction of Individual Names
- Switching Names or Assignments
- New Symbols, Variables, Parameters or Components

Note

Please be aware that the absolute block number is the determining factor when making block calls ("Call FC" or "Call FB, DB") for the logic block – even when symbolic address priority has been set!

Correction of Individual Names

Examples:

In the symbol table or in the program editor/block editor a spelling error in a name has to be corrected. This applies to all names in the symbol table as well as to all the names of parameters, variables or components that can be changed with the program editor/block editor.

Setting the Address Priority:

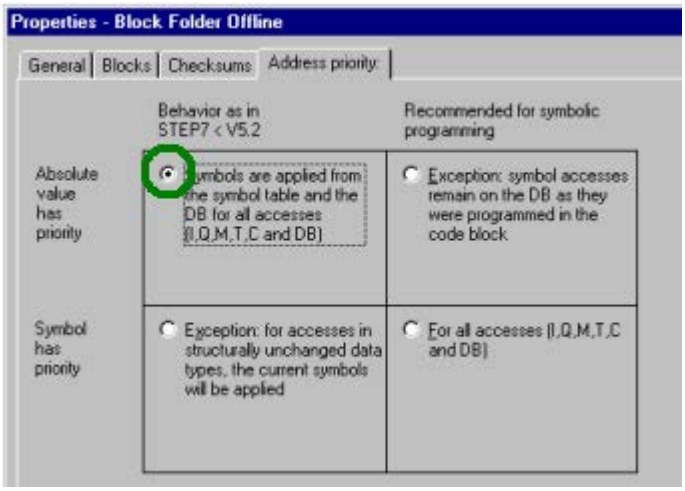

Tracking Changes:

In the SIMATIC Manager, select the block folder and then select the menu command **Edit > Check Block Consistency**. The "Check block consistency' function make the changes necessary in the individual blocks.

Switching Names or Assignments

Examples:

- The names of existing assignments in the symbol table are switched.
- Existing assignments in the symbol table are assigned new addresses.
- Variable names, parameter names or component names are switched in the program editor/block editor.

Setting the Address Priority:

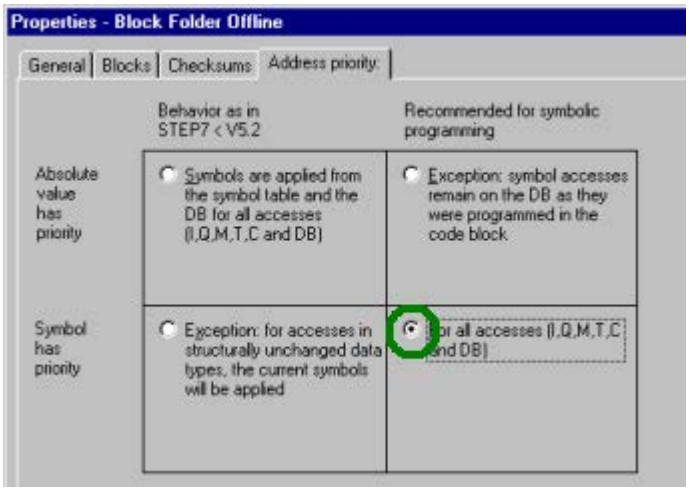

Tracking Changes:

- In the SIMATIC Manager, select the block folder and then select the menu command **Edit > Check Block Consistency**. The "Check block consistency" function makes the changes necessary in the individual blocks.

New Symbols, Variables, Parameters or Components

Examples:

- You are creating new symbols for addresses used in the program.
- You are adding new variable or parameters to data blocks, UDTs or function blocks.

Setting the Address Priority:

- For changes in the symbol table.

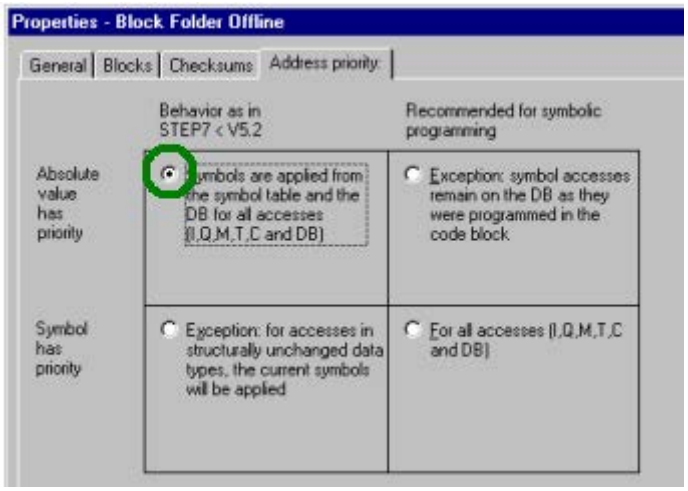

- For changes in the program/block editor.

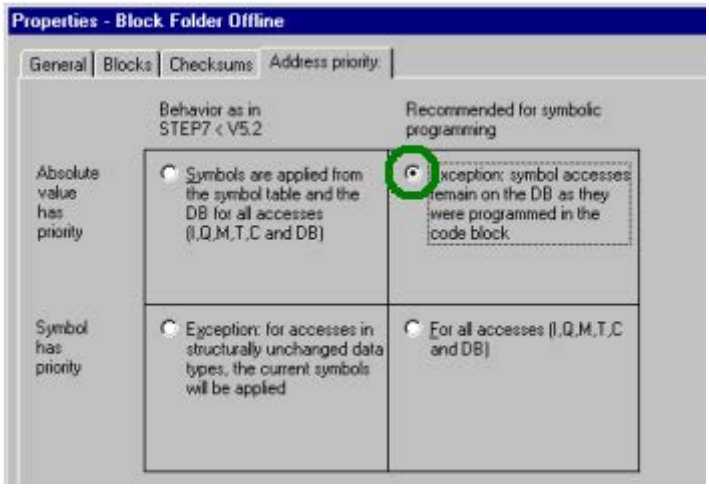

Tracking Changes:

In the SIMATIC Manager, select the block folder and then select the menu command **Edit > Check Block Consistency**. The "Check block consistency' function make the changes necessary in the individual blocks.

8.5 Symbol Table for Shared Symbols

Shared symbols are defined in the symbol table.

An (empty) symbol table ("Symbols" object) is created automatically when you create an S7 program.

Validity

The symbol table is only valid for the module to which you link the program. If you want to use the same symbols in a number of different CPUs, you yourself must ensure that the entries in the various symbol tables all match up (for example, by copying the table).

8.5.1 Structure and Components of the Symbol Table

Structure of the Symbol Table

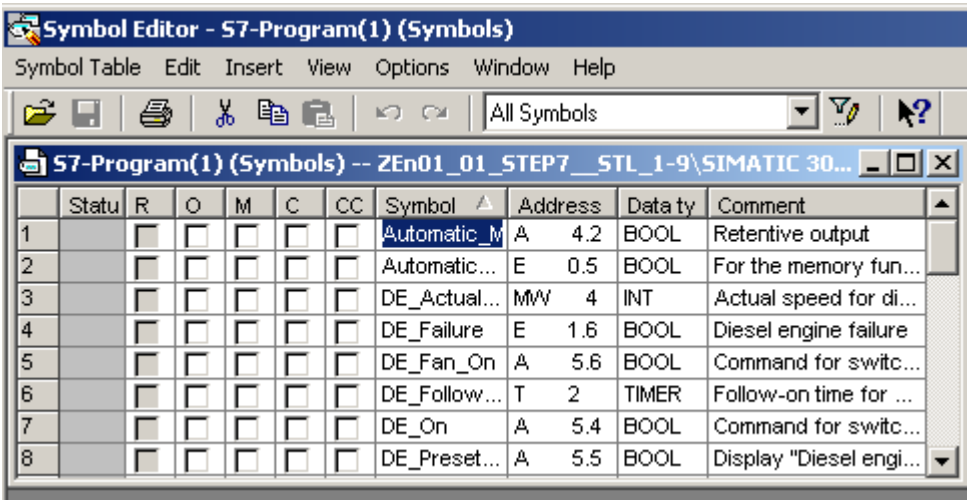

Row

	If the columns for "Special Object Properties" were hidden (the menu command View > Columns O, M, C, R, CC was deselected), this symbol appears in the row if the row concerned has at least one "Special Object Property" set for it.

"Status" Column

=	The symbol name or address is identical to another entry in the symbol table.
✕	The symbol is still incomplete (the symbol name or the address is missing).

R/O/M/C/CC Columns

The columns R/O/M/CC show whether a symbol was assigned special object properties (attributes):

- R (monitoring) means that error definitions for process diagnostics were created for the symbol with the optional package S7-PDIAG (V5).
- O means that the symbol can be operated and monitored with WinCC.
- M means that a symbol-related message (SCAN) was assigned to the symbol.
- C means that the symbol is assigned communication properties.
- CC means that the symbol can be quickly and directly monitored and controlled in the program editor ('Control at Contact').

Click on the check box to enable or disable these "special object properties". You can also edit the "special object properties" via **Edit > Special Object Properties** menu command

"Symbol" Column

The symbolic name must not be longer than 24 characters.

You cannot assign symbols in the symbol table for addresses in data blocks (DBD, DBW, DBB, DBX). Their names are assigned in the data block declaration.

For organization blocks (OB) and some system function blocks (SFB) and system functions (SFC), predefined symbol table entries already exist which you can import into the table when you edit the symbol table of your S7 program. The import file is stored in the STEP 7 directory under ...\S7data\Symbol\Symbol.sdf.

"Address" Column

An address is the identifier for a particular memory area and memory location.
Example: Input I 12.1

The syntax of the address is checked as it is entered.

"Data Type" Column

You can choose between a number of data types available in STEP 7. The data type field already contains a default data type that you may change, if necessary. If the change you make is not suitable for the address or its syntax is incorrect, an error message appears as you exit the field.

"Comment" Column

You can assign comments to all symbols. The combination of brief symbolic names and more detailed comments makes creating programs more effective and makes your program documentation more complete. A comment can be up to 80 characters in length.

8.5.2 Addresses and Data Types Permitted in the Symbol Table

Only one set of mnemonics can be used throughout a symbol table. Switching between SIMATIC (German) and IEC (English) mnemonics must be done in the SIMATIC Manager using the menu command **Options > Customize** in the "Language" tab.

IEC	SIMATIC	Description	Data Type	Address Range
I	E	Input bit	BOOL	0.0 to 65535.7
IB	EB	Input byte	BYTE, CHAR	0 to 65535
IW	EW	Input word	WORD, INT, S5TIME, DATE	0 to 65534
ID	ED	Input double word	DWORD, DINT, REAL, TOD, TIME	0 to 65532
Q	A	Output bit	BOOL	0.0 to 65535.7
QB	AB	Output byte	BYTE, CHAR	0 to 65535
QW	AW	Output word	WORD, INT, S5TIME, DATE	0 to 65534
QD	AD	Output double word	DWORD, DINT, REAL, TOD, TIME	0 to 65532
M	M	Memory bit	BOOL	0.0 to 65535.7
MB	MB	Memory byte	BYTE, CHAR	0 to 65535
MW	MW	Memory word	WORD, INT, S5TIME, DATE	0 to 65534
MD	MD	Memory double word	DWORD, DINT, REAL, TOD, TIME	0 to 65532
PIB	PEB	Peripheral input byte	BYTE, CHAR	0 to 65535
PQB	PAB	Peripheral output byte	BYTE, CHAR	0 to 65535
PIW	PEW	Peripheral input word	WORD, INT, S5TIME, DATE	0 to 65534
PQW	PAW	Peripheral output word	WORD, INT, S5TIME, DATE	0 to 65534
PID	PED	Peripheral input double word	DWORD, DINT, REAL, TOD, TIME	0 to 65532
PQD	PAD	Peripheral output double word	DWORD, DINT, REAL, TOD, TIME	0 to 65532
T	T	Timer	TIMER	0 to 65535
C	Z	Counter	COUNTER	0 to 65535
FB	FB	Function block	FB	0 to 65535
OB	OB	Organization block	OB	1 to 65535
DB	DB	Data block	DB, FB, SFB, UDT	1 to 65535
FC	FC	Function	FC	0 to 65535
SFB	SFB	System function block	SFB	0 to 65535
SFC	SFC	System function	SFC	0 to 65535
VAT	VAT	Variable table		0 to 65535
UDT	UDT	User-defined data type	UDT	0 to 65535

8.5.3 Incomplete and Non-Unique Symbols in the Symbol Table

Incomplete Symbols

It is also possible to store incomplete symbols. You can, for example, enter only the symbol name first and then add the corresponding address at a later date. This means you can interrupt your work on the symbol table at any time, save the interim result, and complete your work another time. Incomplete symbols are identified in the "Status" column by the symbol. When you come to use the symbol for creating software (without an error message appearing), you must have entered the symbolic name, the address, and the data type.

How Ambiguous Symbols Occur

Ambiguous symbols occur when you insert a symbol in the symbol table whose symbolic name and/or address was already used in another symbol row. This means both the new symbol and the existing symbol are ambiguous. This status is indicated by the symbol in the "Status" column.

This happens, for example, when you copy and paste a symbol in order to change the details in the copy slightly.

Identification of Ambiguous Symbols

In the symbol table, ambiguous symbols are identified by highlighting them graphically (color, font). This change in their representation means they still require editing. You can either display all symbols or filter the view so that only unique or ambiguous symbols are displayed.

Making Symbols Unique

An ambiguous symbol becomes unique when you change the component (symbol and/or address) which caused this status. If two symbols are ambiguous and you change one of them to make it unique, the other one also becomes unique.

8.6 Entering Shared Symbols

Using the menu command **Insert > Symbol** you can insert symbols in the code section of your program. If the cursor is positioned at the beginning, the end, or within a string, the symbol is already selected that starts with this string - if such a symbol exists. If you change the string, the selection is updated in the list.

Separators for the beginning and end of a string are, for example, blank, period, colon. No separators are interpreted within shared symbols.

To enter symbols, proceed as follows:

1. Enter the first letter of the required symbol in the program.
2. Press CTRL and J simultaneously to display a list of symbols. The first symbol starting with the letter you entered is already selected.
3. Enter the symbol by pressing RETURN or select another symbol.

The symbol enclosed in quotation marks is then entered instead of the first letter.

In general the following applies: if the cursor is located at the beginning, the end, or within a string, this string is replaced by the symbol enclosed in quotation marks when inserting a symbol.

8.6.1 General Tips on Entering Symbols

To enter new symbols in the symbol table, position the cursor in the first empty row of the table and fill out the cells. You can insert new rows before the current row in the symbol table using the menu command **Insert > Symbol**. If the row before the cursor position already contains an address, you will be supported when inserting new symbols by a presetting of the "Address" and "Data Type" columns. The address is derived from the previous row; the default data type is entered as data type.

You can copy and modify existing entries using the commands in the Edit menu. Save and then close the symbol table. You can also save symbols which have not been completely defined.

When you enter the symbols, you should note the following points:

Column	Note
Symbol	The name must be unique within the whole symbol table. When you confirm the entry in this field or exit the field, a non-unique symbol is marked. The symbol can contain up to 24 characters. Quotation marks (") are not permitted.
Address	When you confirm the entry in this field or exit the field, a check is made as to whether the address entered is allowed.
Data Type	When you enter the address, this field is automatically assigned a default data type. If you change this default, the program checks whether the new data type matches the address.
Comment	You can enter comments here to briefly explain the functions of the symbols (max. 80 characters). Entering a comment is optional.

8.6.2 Entering Single Shared Symbols in a Dialog Box

The procedure described below shows you how you can change symbols or define new symbols in a dialog box while programming blocks without having to display the symbol table.

This procedure is useful if you only want to edit a single symbol. If you want to edit a number of symbols, you should open the symbol table and work in it directly.

Activating Symbol Display in a Block

You activate the display of symbols in the block window of an open block using the menu command **View > Display > Symbolic Representation**. A check mark is displayed in front of the menu command to show that the symbolic representation is active.

Defining Symbols When Entering Programs

1. Make certain that the symbolic representation is switched on in the block window (menu command **View > Display > Symbolic Representation**.)
2. Select the absolute address in the code section of your program to which you want to assign a symbol.
3. Select the menu command **Edit > Symbol**.
4. Fill out the dialog box and close it, confirming your entries with "OK" and making sure you enter a symbol.

The defined symbol is entered in the symbol table. Any entries that would lead to non-unique symbols are rejected with an error message.

Editing in the Symbol Table

Using the menu command **Options > Symbol Table** you can open the symbol table to edit it.

8.6.3 Entering Multiple Shared Symbols in the Symbol Table

Opening the Symbol Table

There are a number of ways of opening a symbol table:

- Double-click the symbol table in the project window.
- Select the symbol table in the project window and select the menu command **Edit > Open Object**.

The symbol table for the active program is displayed in its own window. You can now create symbols or edit them. When you open a symbol table for the first time after it was created, it is empty.

Entering Symbols

To enter new symbols in the symbol table, position the cursor in the first empty row of the table and fill out the cells. You can insert new empty rows before the current row in the symbol table using the menu command **Insert > Symbol**. You can copy and modify existing entries using the commands in the Edit menu. Save and then close the symbol table. You can also save symbols that have not been completely defined.

Sorting Symbols

The data records in the symbol table can be sorted alphabetically according to symbol, address, data type, or comment.

You can change the way the table is sorted by using the menu command **View > Sort** to open a dialog box and define the sorted view.

Filtering Symbols

You can use a filter to select a subset of the records in a symbol table.

Using the menu command **View > Filter** you open the "Filter" dialog box.

You can define criteria that the records must fulfill in order to be included in the filtered view. You can filter according to:

- Symbol names, addresses, data types, comments
- Symbols with operator control and monitoring attribute, symbols with communication properties, symbols for binary variables for messages (bit memory or process input)
- Symbols with the status "valid," "invalid (non-unique, incomplete)"

The individual criteria are linked by an AND operation. The filtered records start with the specified strings.

If you want to know more about the options in the "Filter" dialog box, open the context-sensitive online help by pressing F1.

8.6.4 Using Upper and Lower Case for Symbols

No Distinction between Upper and Lower Case Characters

Previously it was possible to define symbols in STEP 7 which differed from one another only in the case used for individual characters. This was changed in STEP 7, V4.02. It is now no longer possible to distinguish between symbols on the basis of the case used.
This change was made in response to the wishes of our customers, and will greatly reduce the risk of errors occurring in a program. The restrictions which have been made to the symbol definition also support the aims of the PLCopen forum to define a standard for transferable programs.

Symbol definition based solely on a distinction between upper and lower case characters is now no longer supported. Previously, for example, the following definition was possible in the symbol table:

Motor1 = I 0.0

motor1 = I 1.0

The symbols were distinguished on the basis of the case used for the first letter. This type of differentiation carries with it a significant risk of confusion. The new definition eliminates this possible source of errors.

Effects on Existing Programs

If you have been using this criterion to distinguish between different symbols you may experience difficulties with the new definition if:

- Symbols differ from one another **only** in their use of upper and lower case characters
- Parameters differ from one another **only** in their use of upper and lower case characters
- Symbols differ from parameters **only** in their use of upper and lower case characters

All three of these conflicts can, however, be analyzed and resolved as described below.

Symbols which Differ from One Another Only in their Use of Upper and Lower Case Characters

Conflict:

If the symbol table has not yet been edited with the current version of the software, the first of the non-unique symbols in the table is used when source files are compiled.

If the symbol table has already been edited, such symbols are invalid; this means that the symbols are not displayed when blocks are opened and source files containing these symbols can no longer be compiled without errors.

Remedy:

Check your symbol table for conflicts by opening the table and saving it again. This action enables the non-unique symbols to be recognized. You can then display the non-unique symbols using the filter "Non-Unique Symbols" and correct them. You should also correct any source files which contain conflicts. You do not need to make any further changes to the blocks, as the current (now conflict-free) version of the symbol table is automatically used or displayed when a block is opened.

Parameters which Differ from One Another Only in their Use of Upper and Lower Case Characters

Conflict:

Source files containing such interfaces can no longer be compiled without errors. Blocks with such interfaces can be opened, but access to the second of these parameters is no longer possible. When you try to access the second parameter, the program automatically returns to the first parameter when the block is saved.

Remedy:

To check which blocks contain such conflicts, it is advisable to generate a source file for all the blocks of a program using the function "Generate Source File." If errors occur when you attempt to compile the source file you have created, there must be a conflict.

Correct your source files by ensuring that the parameters are unique; for example, by means of the "Find and Replace" function. Then compile the files again.

Symbols which Differ from Parameters Only in their Use of Upper and Lower Case Characters

Conflict:

If shared and local symbols in a source file only differ from one another in their use of upper and lower case characters, and is no initial characters have been used to identify shared ("symbol name") or local (#symbol name) symbols, the local symbol will always be used during compilation. This results in a modified machine code.

Remedy:

In this case it is advisable to generate a new source file from all of the blocks. This will automatically assign local and shared access with the corresponding initial characters and will ensure that they are handled correctly during future compilation procedures.

8.6.5 Exporting and Importing Symbol Tables

You can export the current symbol table to a text file in order to be able to edit it with any text editor.

You can also import tables created using another application into your symbol table and continue to edit them there. The import function can be used, for example, to include in the symbol table assignment lists created with STEP5/ST following conversion.

The file formats *.SDF, *.ASC, *.DIF, and *.SEQ are available to choose from.

Rules for Exporting

You can export the whole symbol table, a filtered subset of the symbol table, or rows selected in the table view.

The properties of symbols that you can set using the menu command **Edit > Special Object Properties** are not exported.

Rules for Importing

- For frequently used system function blocks (SFBs), system functions (SFCs)and organization blocks (OBs)predefined symbol table entries already exist in the file ...\S7DATA\SYMBOL\SYMBOL.SDF which you can import as required.
- The properties of symbols that you can set using the menu command **Edit > Special Object Properties** are not taken into consideration when exporting and importing.

8.6.6 File Formats for Importing/Exporting a Symbol Table

The following file formats can be imported into or exported out from the symbol table:

- ASCII file format (ASC)
- Data Interchange Format (DIF)
  You can open, edit, and save DIF files in Microsoft Excel.
- System Data Format (SDF)
  You can open, edit, and save SDF files in Microsoft Access.
  - To import and export data to and from the Microsoft Access application, use the SDF file format.
  - In Access, select the file format "Text (with delimiters)".
  - Use the double inverted comma (") as the text delimiter.
  - Use the comma (,) as the cell delimiter.
- Assignment list (SEQ)
  Caution: When exporting the symbol table to a file of the type .SEQ comments that are longer than 40 characters are truncated after the 40th character.

ASCII File Format (ASC)

File Type	***.ASC**				
Structure:	Record length, delimiter comma, record				
Example:	126,green_phase_ped.	T	2	TIMER	Duration of green phase for pedestrians
	126,red_ped.	Q	0.0	BOOL	Red for pedestrians

Data Interchange Format (DIF)

File Type	***.DIF**
Structure:	A DIF file consists of the file header and the data:

Header	**TABLE**	**Start of a DIF File**
	0,1	
	"<Title>"	Comment string
	VECTORS	Number of records in the file
	0,<No. of records>	
	""	
	TUPLES	Number of data fields in a record
	0,<No. of columns>	
	""	
	DATA	ID for the end of the header and start of the data
	0,0	
	""	
Data (per record)	<type>,<numeric value>	ID for the data type, numeric value
	<String>	Alphanumeric part or
	V	if the alphanumeric part is not used

Header: the file header must contain the record types TABLE, VECTORS, TUPLES, and DATA in the order specified. Before DATA, DIF files can contain further, optional record types. These are, however, ignored by the Symbol Editor.

Data: in the data part, each entry consists of three parts: the ID for the Type (data type), a numeric value, and an alphanumeric part.

You can open, edit, and save DIF files in Microsoft Excel. You should not use accents, umlauts, or other special language characters.

System Data Format (SDF)

File Type	***.SDF**
Structure:	Strings in quotation marks, parts separated by commas
Example:	"green_phase_ped.","T 2","TIMER","Duration of green phase for pedestrians" "red_ped.","Q 0.0","BOOL","Red for pedestrians"

To open an SDF file in Microsoft Access you should select the file format 'Text (with delimiter)'. Use the double quotation mark (") as the text delimiter and the comma (,) as the field delimiter.

Assignment List (SEQ)

File Type	***.SEQ**
Structure:	TAB Address TAB Symbol TAB Comment CR
Example:	T 2 green_phase_ped. Duration of green phase for pedestrians Q 0.0 red_ped. Red for pedestrians

TAB stands for the tabulator key (09H),
CR stands for carriage return with the RETURN key (0DH).

8.6.7 Editing Areas in Symbol Tables

As of STEP 7 V5.3, you can now select and edit contiguous areas within a symbol table. This means that you can copy and/or cut parts of one symbol table and insert them into another symbol table or delete them as required.

This makes it easier to update symbol tables by quickly transferring data from one symbol table to another.

Areas that can be selected:

- You can select entire rows as soon as you click in the first column in the row. If you want to select all the fields, ranging from the "Status" column to the "Comments" column, then these are also part of the selected row.
- You can select one or more contiguous fields as an overall area. To be able to select this area, all fields must belong to the "Symbol", "Address", "Data Type" and "Comments" columns. If you make an invalid selection, the menu commands for editing will not be available.
- The R, O, M, C, CC columns contain the special object properties for the respective symbols and are only copied if the "Also copy special object properties" check box is selected in the "Customize" dialog box (menu command Options > Customize).
- The contents of the R, O, M, C, CC columns are copied if these columns are displayed. To show or hide these columns, select the **View > R, O, M, C, CC Columns** menu command.

To edit a symbol table, proceed as follows:

1. Select the area that you want to edit in the symbol table by using either of the following methods:
   - Using the **mouse**, click in the starting cell, and while keeping the left mouse button depressed, move the mouse over the area that you want to select.
   - Using the **keyboard**, select the area by pressing the shift key and then the cursor (arrow) keys.
2. The selected area is shown in reverse video. The cell selected first is shown in normal display and is surrounded by a frame.
3. Edit the area selected as required.

9 Creating Blocks and Libraries

9.1 Selecting an Editing Method

Depending on the programming language you use to create a program, you can enter your program either in incremental input mode and/or free-edit (text) mode.

Incremental Editors for the Programming Languages Ladder Logic (LAD), Function Block Diagram (FBD), Statement List (STL), or S7-GRAPH

In the incremental input mode editors for Ladder, FBD, STL, and S7-GRAPH, you create **blocks** that are stored in the user program. You should choose to use incremental input mode if you want to check what you have entered immediately. This edit mode is particularly suitable for beginners. In incremental input mode, the syntax of each line or element is checked immediately after it has been entered. Any errors are indicated and must be corrected before completing the entry. Entries with correct syntax are automatically compiled and stored in the user program.

Any symbols used must be defined before editing the statements. If certain symbols are not available, the block can not be fully compiled; this inconsistent interim version can, however, be saved.

Source Code (Text) Editors for the Programming Languages STL, S7 SCL, or S7 HiGraph

In source code editors, you create **source code files** for subsequent compilation to generate blocks.

We recommend you use source code editing, as this is a highly efficient program editing and monitoring method.

The source code of the program or block is edited in a text file and then compiled.

The text files (source files) are stored in the sources folder of your S7 program, for example, as an **STL source file** or **SCL source file**. A source file can contain code for one or multiple blocks. The STL and SCL text editors allow you to generate source code for **OBs, FBs, FCs, DBs, and UDTs** (user-defined data types), though you can use them to create a complete user program. One such text file may contain the complete program (that is, all blocks) for a CPU.

When you compile the source file, the corresponding blocks will be generated and written to the user program. All symbols used must be defined before you can compile them. Data errors are not reported until the respective compiler interprets the source file.

It is imperative for compilation to stay conform with the prescribed syntax of the programming language. A syntax check is only performed on account of a user instruction or when the source file is compiled into blocks.

9.2 Selecting the Programming Language

Setting the Programming Language for the Editor

Before you you generate a particular block or a source file, select the programming language and editor via the object properties. This selection determines which editor is started when the block or source file is opened.

Starting the Editor

Start the appropriate language editor either in SIMATIC Manager with a double-click on the corresponding object (block, source file, etc.), by selecting the menu command **Edit > Open Object** or click on the corresponding toolbar button.

To create an S7 program, the programming languages listed in the table are available to you. The STEP 7 programming languages LAD, FBD, and STL are supplied with the standard STEP 7 software package. You can purchase other programming languages as optional software packages.

You then have the choice of a number of different programming philosophies (Ladder Logic, Function Block Diagram, Statement List, standard language, sequential control, or status graph) and whether to use a text-based or a graphic programming language.

Select a programming language to determine the input mode (X).

Programming Language	User Group	Application	Incremental Input	Free-Edit Mode	Block can be Documented Back from the CPU
Statement List STL	Users who prefer programming in a language similar to machine code	Programs optimized in terms of run time and memory requirements	X	X	X
Ladder Logic LAD	Users who are accustomed to working with circuit diagrams	Programming of logic controls	X	–	X
Function Block Diagram FBD	Users who are familiar with the logic boxes of Boolean algebra	Programming of logic controls	X	–	X
F-LAD, F-FBD Optional package	Users who are familiar with the programming languages LAD and FDB.	Programming of safety programs for F-systems	X	–	X
SCL (Structured Control Language) Optional package	Users who have programmed in high-level languages such as PASCAL or C	Programming data processing tasks	–	X	–
S7-GRAPH Optional package	Users who want to work oriented on the technological functions and do not have extensive knowledge of programming/PLCs	Convenient description of sequential processes	X	–	X

Programming Language	User Group	Application	Incremental Input	Free-Edit Mode	Block can be Documented Back from the CPU
HiGraph Optional package	Users who want to work oriented on the technological functions and do not have extensive knowledge of programming/PLCs	Convenient description of asynchronous, non-sequential processes	–	X	–
CFC Optional package	Users who want to work oriented on the technological functions without extensive programming or PLC experience	Description of continuous processes	–	–	–

If blocks contain no errors, you can switch between Ladder Logic, Function Block Diagram, or Statement List format. Program parts that cannot be displayed in the target language are shown in Statement List format.

Under STL, you can generate blocks from source files and vice versa.

9.2.1 Ladder Logic Programming Language (LAD)

The graphic programming language Ladder Logic (LAD) is based on the representation of circuit diagrams. The elements of a circuit diagram, e.g. normally open contacts and normally closed contacts, are combined to form networks. The code section of a logic block represents one or more networks.

Example of Networks in LAD

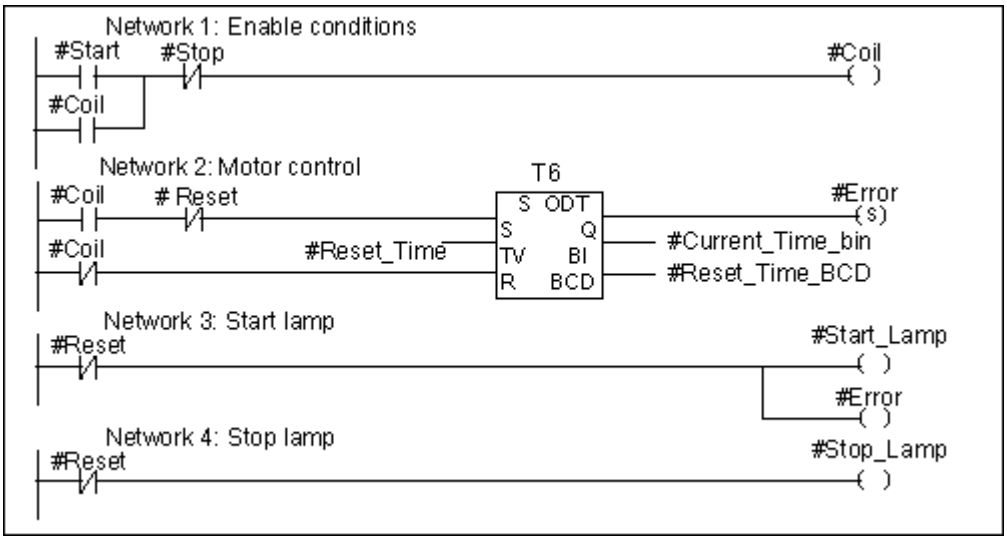

The programming language LAD is supplied with the standard STEP 7 software package. Programs are created under LAD with an incremental editor.

9.2.2 Function Block Diagram Programming Language (FBD)

The programming language Function Block Diagram (FBD) is based on graphic logic symbols also known in Boolean algebra. Complex functions such as math functions can also be displayed directly in combination with the logic boxes.

The programming language FBD is supplied with the standard STEP 7 software package.

Example of a Network in FBD

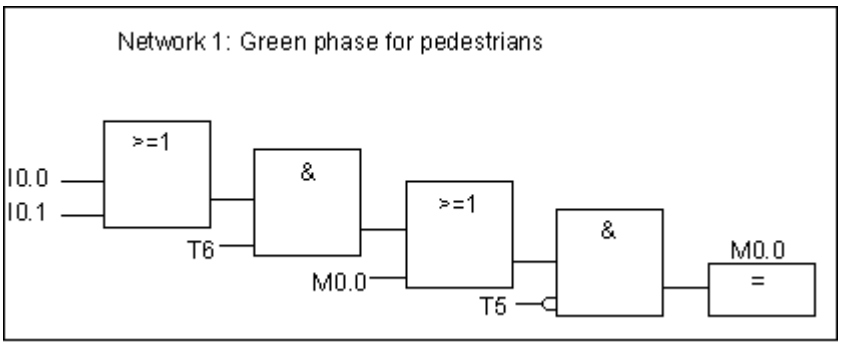

Programs are created in FBD with an incremental editor.

9.2.3 Statement List Programming Language (STL)

The programming language STL is a text-based programming language with a structure similar to machine code. Each statement represents a program processing operation of the CPU. Multiple statements can be linked to form networks.

Example of Networks in Statement List

```
      Network 1: Control drain valve
A(
O
O    #Coil
)
AN  #Close
=   #Coil
      Network 2: Display "Valve open"
A    #Coil
=    #Disp_open
      Network 3: Display "Valve closed"
AN #Coil
=    #Disp_closed
```

The programming language STL is supplied with the standard STEP 7 software package. With this programming language, you can use incremental editors to edit S7 blocks and you can create and compile STL program source files in a source code editor to generate blocks.

9.2.4 S7 SCL Programming Language

The programming language SCL (Structured Control Language) is available as an optional package. This is a high-level text-based language whose global language definition conforms to IEC 1131-3. The language closely resembles PASCAL and, other than in STL, simplifies the programming of loops and conditional branches due to its high-level language commands, for example. SCL is therefore suitable for calculating equations, complex optimization algorithms, or the management of large data volume.

S7 SCL programs are written in the source code editor.

Example:

```
FUNCTION_BLOCK FB20
VAR_INPUT
ENDVAL:                 INT;
END_VAR
VAR_IN_OUT
IQ1 :           REAL;
END_VAR
VAR
INDEX:                  INT;
END_VAR

BEGIN
CONTROL:=FALSE;
FOR INDEX:= 1 TO ENDVALUE DO
    IQ1:= IQ1 * 2;
    IF IQ1 >10000 THEN
            CONTROL = TRUE
    END_IF
END_FOR;
END_FUNCTION_BLOCK
```

9.2.5 S7-GRAPH Programming Language (Sequential Control)

The graphic programming language S7-GRAPH is available as optional package. It allows you to program sequential controls. This includes the creation of sequencers and the specification of corresponding step contents and transitions. You program the contents of the steps in a special programming language (similar to STL). Transitions are programmed in a Ladder Logic Editor (a light version of LAD).

S7-GRAPH displays even complex sequences very clearly and makes programming and troubleshooting more effective.

Example of a Sequential Control in S7-GRAPH

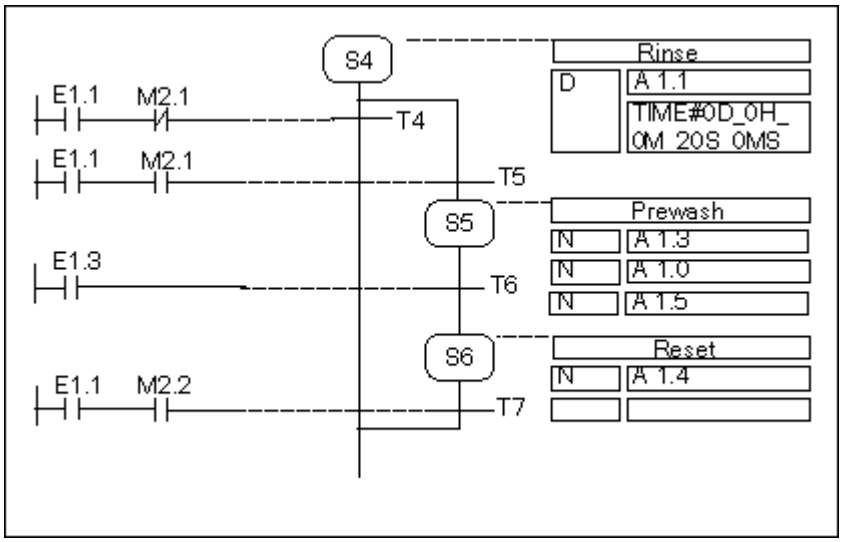

Blocks Created

With the S7-GRAPH editor you program the function block that contains the sequencer. A corresponding instance DB contains the data for the sequencer, e.g. the FB parameters, step and transition conditions. You can generate this instance DB automatically in the S7-GRAPH editor.

Source File

A text-based source file (GRAPH source file) can be generated from a function block created in S7-GRAPH which can be interpreted by OPs or text-based displays for displaying the sequencer.

9.2.6 S7 HiGraph Programming Language (State Graph)

The graphic programming language S7 HiGraph is available as an optional package. It allows you to program a number of the blocks in your program as status graphs. Here you split your system into dedicated functional units which can acquire different states and you define the transition conditions between states. You describe the actions assigned to the states and the conditions for the transitions between the states in a zoom-type language similar to Statement List.

You create a graph for each functional unit that describes the response of this functional unit. The plant graphs are gathered in graph groups. The graphs can communicate to synchronize functional units.

The well arranged view of the status transitions of a functional unit allows systematic programming and simplifies debugging. The difference between S7-GRAPH and S7-HiGraph is, that the latter acquires only one state (in S7-GRAPH: "step") at any one time. The figure below shows how to create graphs for functional units (example).

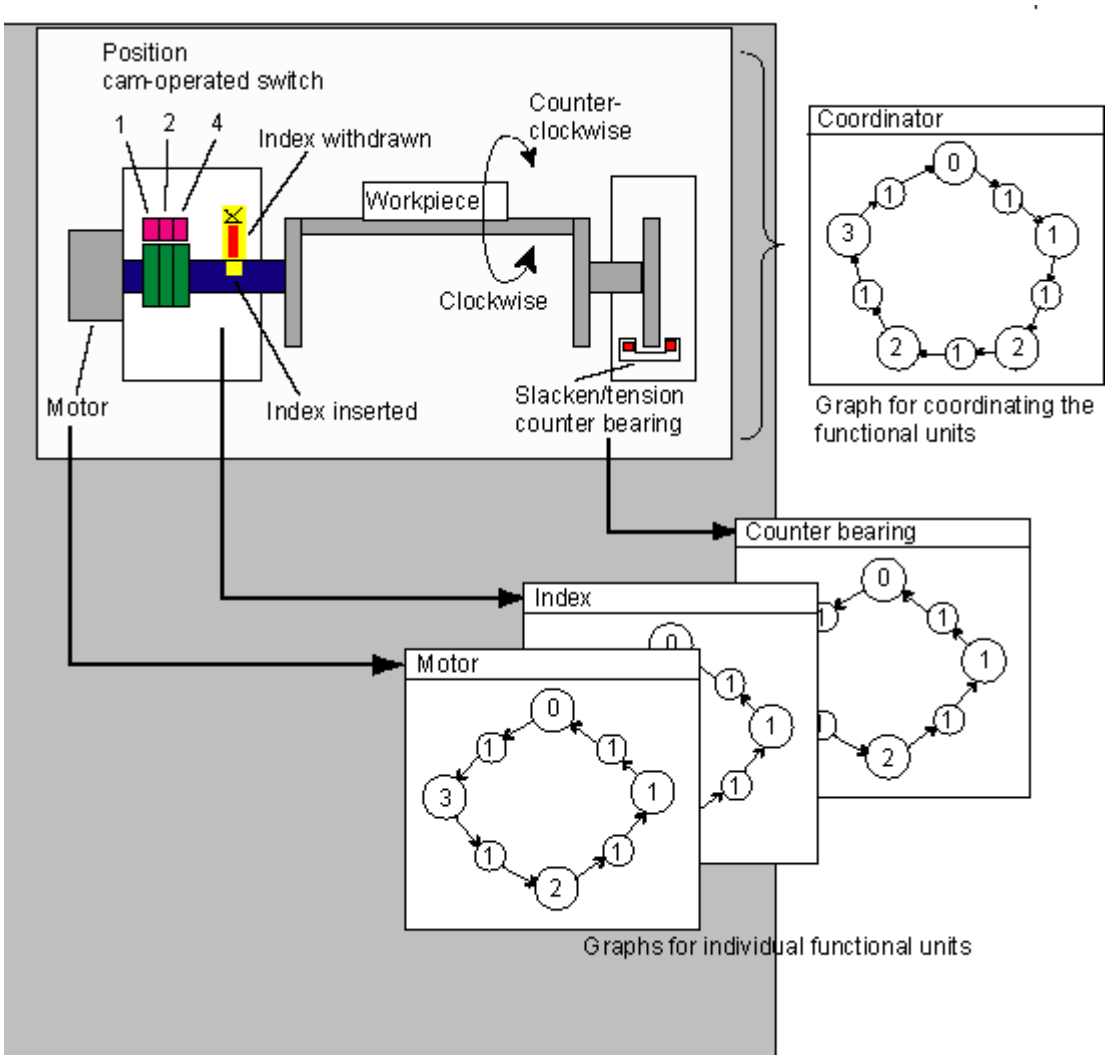

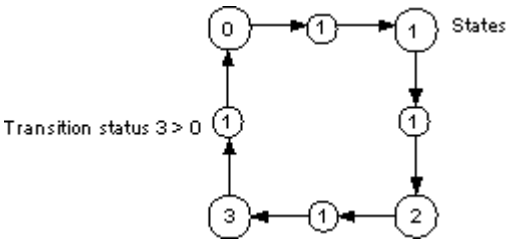

A graph group is stored in a HiGraph source file in the "Source" folder of the S7 program. This source file is then compiled to generate S7 blocks for the user program.

Syntax and formal parameters are checked after the last entry was made in a graph (when the working window is closed). Addresses and symbols are not checked until the source file is being compiled.

9.2.7 S7 CFC Programming Language

The optional software package CFC (*Continuous Function Chart*) is a programming language used to link complex functions graphically.

You use the programming language S7 CFC to link existing functions. You do not need to program many standard functions yourself, instead you can use libraries containing standard blocks (for example, for logic, math, control, and data processing functions). To use CFC you do not require any detailed programming knowledge or specific knowledge of programmable control, and you can concentrate on the technology used in your branch of industry.

The program created is stored in the form of CFC charts. These are stored in the "Charts" folder beneath the S7 program. These charts are then compiled to form the S7 blocks for the user program.

You may want to create blocks to be connected yourself, in which case you program them for SIMATIC S7 with one of the S7 programming languages.

9.3 Creating Blocks

9.3.1 Blocks Folder

You can create the program for an S7 CPU in the form of:

- Blocks
- Source files

The folder "Blocks" is available under the S7 program for storing blocks.

This block folder contains the blocks you need to download to the S7 CPU for your automation task. These loadable blocks include logic blocks (OBs, FBs, FCs) and data blocks (DB). An empty organization block OB1 is automatically created with the block folder because you will always need this block to execute your program in the S7 CPU.

The block folder also contains the following objects:

- The user-defined data types (UDT) you created. These make programming easier but are not downloaded to the CPU.
- The variable tables (VAT) that you can create to monitor and modify variables for debugging your program. Variable tables are not downloaded to the CPU.
- The object "System Data" (system data blocks) that contains the system information (system configuration, system parameters). These system data blocks are created and supplied with data when you configure the hardware.
- The system functions (SFC) and system function blocks (SFB) that you need to call in your user program. You cannot edit the SFCs and SFBs yourself.

With the exception of the system data blocks (which can only be created and edited via the configuration of the programmable logic controller), the blocks in the user program are all edited using the respective editor. This editor is started automatically by double-clicking the respective block.

Note

The blocks you programmed as source files and then compiled are also stored in the block folder.

9.3.2 Using User-Defined Data Types to Access Data

User-Defined Data Types

User-defined data types (UDTs) can combine elementary and complex data types. You can assign a name to UDTs and use them more than once. The following figure illustrates the structure of a user-defined data type consisting of an integer, a byte, a character, a floating-point number, and a Boolean value.

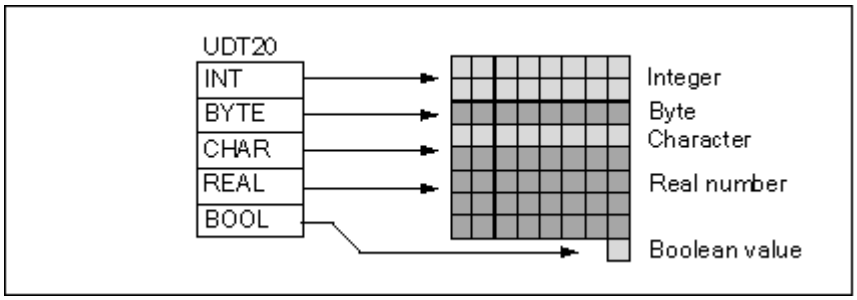

Instead of entering all the data types singly or as a structure, you only need to specify "UDT20" as the data type and STEP 7 automatically assigns the corresponding memory space.

Creating a User-Defined Data Type

You define UDTs with STEP 7. The following figure shows a UDT consisting of the following elements: an integer (for saving the amount), a byte (for saving the original data), a character (for saving the control code), a floating-point number (for saving the temperature), and a Boolean memory bit (for terminating the signal). You can assign a symbolic name to the UDT in the symbol table (for example, *process data*).

Address	Name	Type	Init. value	Comment
0.0	Stack_1	STRUCT		
+0.0	Amount	INT	100	
+2.0	Original_data	BYTE		
+4.0	Control_code	CHAR		
+6.0	Temperature	REAL	120	
+8.0	End	BOOL	FALSE	
=10.0		END_STRUCT		

Once you have created a UDT, you can use the UDT like a data type if, for example, you declare the data type *UDT200* for a variable in a DB (or in the variable declaration of an FB).

The following figure shows a DB with the variables *process_data_1* with the data type *UDT200*. You only specify *UDT200* and *process_data_1*. The arrays shown in italics are created when you compile the DB.

Address	Name	Type	Init. Value	Comment
0.0		STRUCT		
+10.0	Process_data_1	UDT200		
=10.0		END_STRUCT		

Assigning Initial Values for a User-Defined Data Type

If you want to assign an initial value to every element of a user-defined data type, you specify a value that is valid for the data type and the name of the element. You can, for example, assign the following initial values (to the user-defined data type declared in the above figure):

```
Amount        =    100
Original_data =    B#16#0)
Control_code  =    'C'
Temperature   =    1.200000e+002
End           =    False
```

If you declare a variable as a UDT, the initial values of the variables are the values you specified when you created the UDT.

Saving and Accessing Data in a User-Defined Data Type

You access the individual elements of a UDT. You can use symbolic addresses (for example *Stack_1.Temperature*). You can, however specify the absolute address at which the element is located (example: if *Stack_1* is located in DB20 starting at byte 0, the absolute address for *amount* is *DB20.DBW0* and the address for *temperature* is *DB20.DBD6*).

Using User-Defined Data Types as Parameters

You can transfer variables of the data type UDT as parameters. If a parameter is declared as UDT in the variable declaration, you must transfer a UDT with the same structure. An element of a UDT can, however, also be assigned to a parameter when you call a block providing the element of the UDT corresponds to the data type of the parameter.

Note

If you call a block created in the S7-SCL programming language that contains a UDT parameter in the program editor, this can result in a type conflict. You should therefore avoid using blocks created in SCL if you use UDTs.

Advantages of DBs with an Assigned UDT

By using UDTs you have created once, you can generate a large number of data blocks with the same data structure. You can then use these data blocks to enter different actual values for specific tasks.

If, for example, you structure a UDT for a formula (for example, for blending colors), you can assign this UDT to several DBs each containing different amounts.

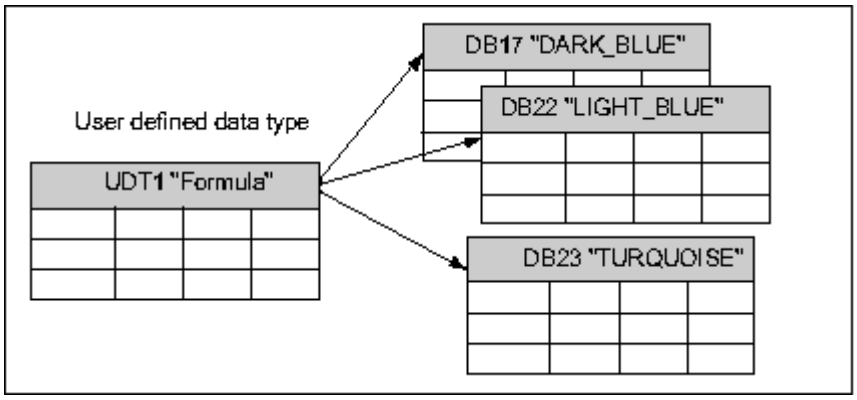

The structure of the data block is determined by the UDT assigned to it.

9.3.3 Block Properties

You can more easily identify the blocks you created if you use block properties and you can also protect these blocks from unauthorized changes.

You should edit the block properties when the block is open. In addition to the properties you can edit, the properties dialog box also displays data for your information only: you cannot edit this information.

The block properties and system attributes are also displayed in the SIMATIC Manager in the object properties for a block. Here you can only edit the properties NAME, FAMILY, AUTHOR, and VERSION.

You edit the object properties after you insert the block via the SIMATIC Manager. If a block was created using one of the editors and not in the SIMATIC Manager, these entries (programming language) are saved automatically in the object properties.

Note

The mnemonics you want to use to program your S7 blocks can be set in the SIMATIC Manager using the menu command **Options > Customize** and the "Language" tab.

Table of Block Properties

When entering block properties, you should observe the input sequence shown in the following table:

Keyword / Property	Meaning	Example
[KNOW_HOW_PROTECT]	Block protection; a block compiled with this option does not allow its code section to be viewed. The interface for the block can be viewed, but it cannot be changed.	KNOW_HOW_PROTECT
[AUTHOR:]	Name of author: company name, department name, or other name (max. 8 characters without blanks)	AUTHOR : Siemens, but no keyword
[FAMILY:]	Name of block family: for example, controllers (max. 8 characters without blanks)	FAMILY : controllers, but no keyword
[NAME:]	Block name (max. 8 characters)	NAME : PID, but no keyword
[VERSION: int1 . int2]	Version number of block (both numbers between 0 and 15, meaning 0.0 to 15.15)	VERSION : 3.10
[CODE_VERSION1]	ID whether a function block can have multiple instances declared or not. If you want to declare multiple instances, the function block should not have this property	CODE_VERSION1

Keyword / Property	Meaning	Example
[UNLINKED] for DBs only!	Data blocks with the UNLINKED property are only stored in the load memory. They take up no space in the working memory and are not linked to the program. They cannot be accessed with MC7 commands. Depending on the specific CPU, the contents of such a DB can be transferred to the working memory only with SFC 20 BLKMOV or SFC 83 READ_DBL.	
[Non-Retain]	Data blocks with this attribute are reset to the load values after every power OFF and power ON and after every STOP-RUN transition of the CPU.	
[READ_ONLY] for DBs only	Write protection for data blocks; its data can only be read and cannot be changed	READ_ONLY
Read-only block	A copy of a block that is stored in read-only status for reference purposes. This property can only be assigned in the program editor by selecting **File > Store Read-Only** menu command.	

The block protection KNOW_HOW_PROTECT has the following consequences:

- If you want to view a compiled block at a later stage in the incremental STL, FBD, or Ladder editors, the code section of the block cannot be displayed.
- The variable declaration table for the block displays only the variables of the declaration types var_in, var_out, and var_in_out. The variables of the declaration types var_stat and var_temp remain hidden.

Assignment: Block Property to Block Type

The following table shows which block properties can be declared for which block types:

Property	OB	FB	FC	DB	UDT
KNOW_HOW_PROTECT	●	●	●	●	–
AUTHOR	●	●	●	●	–
FAMILY	●	●	●	●	–
NAME	●	●	●	●	–
VERSION	●	●	●	●	–
UNLINKED	–	–	–	●	–
READ_ONLY	–	–	–	●	–
Non-Retain	–	–	–	●	–
Read-only block	●	●	●	●	●

The KNOW_HOW_PROTECT property can be set in a source file when you program the block. It is displayed in the "Block Properties" dialog box but cannot be changed.

9.3.4 Displaying Block Lengths

Block lengths are displayed in "bytes."

Display in the Block Folder Properties

The following lengths are displayed in the block folder properties in the offline view:

- Size (sum of all blocks without system data) in the load memory of the programmable controller
- Size (sum of all blocks without system data) in the work memory of the programmable controller
- Block lengths on the programming device (PG/PC) are not displayed in the block folder properties.

Display in the Block Properties

The following are displayed in the block properties:

- Required number of local data: size of the local data in bytes
- MC7: size of the MC7 code in bytes, or size of the DB user data
- Size of the load memory in the programmable controller
- Size of the work memory in the programmable controller: only displayed if hardware assignment is recognized.

For display purposes, it does not matter whether the block is located in the window of an online view or an offline view.

Display in the SIMATIC Manager (Details View)

If a block folder is opened and the "Details View" selected, the work memory requirement is displayed in the project window, irrespective of whether the block folder is located in the window of an online view or an offline view.

You can calculate the sum of the block lengths by selecting all the relevant blocks. In this case, the sum of the selected blocks is displayed in the status bar of the SIMATIC Manager.

No lengths are displayed for blocks which cannot be downloaded to the programmable controller (for example, variable tables).

Block lengths on the programming device (PG/PC) are not displayed in the Details view.

9.3.5 Rewiring

The following blocks and addresses can be rewired:

- Inputs, outputs
- Memory bits, timers, counters
- Functions, function blocks

To rewire:

1. Select the "Blocks" folder that contains the individual blocks you want to rewire in the SIMATIC Manager.
2. Select the menu command **Options > Rewire**.
3. Enter the required replacements (old address/new address) in the table in the "Rewire" dialog box.
4. Select the option "All addresses within the specified address area" if you want to rewire address areas (BYTE, WORD, DWORD).
   Example: You enter IW0 and IW4 as the address areas. The addresses I0.0 – I1.7 are then rewired to the addresses I4.0 – I5.7. Addresses from the rewired area (for example, I0.1) can then no longer be entered in the table individually.
5. Click the "OK" button.

This starts the rewire process. After rewiring is completed, you can specify in a dialog box whether you want to see the info file on rewiring. This info file contains the address lists "Old address" and "New address." The individual blocks are listed with the number of wiring processes that have been carried out in each one.

When rewiring, the following should be noted:

- When you rewire (that is, rename) a block, the new block cannot currently exist. If the block exists, the process is interrupted.
- When you rewire a function block (FB), the instance data block is automatically assigned to the rewired FB. The instance DB does not change, that is, the DB number is retained.

9.3.6 Comparing Blocks

Introduction

To compare blocks that are in different locations, you can start the block comparison process in either of the following ways:

- Go to the SIMATIC Manager and select the Options > Compare Blocks menu command. In the "Compare Blocks - Results" dialog box that is displayed, click the "Go to" button. The results of the comparison will appear in the program editor (LAD/FBD/STL) in the "Comparison" tab
- Go to the program editor. Select the Options > Compare On-/Offline Partners menu command.

The following sections explain how the block-comparison process functions. In the following discussion, a distinction is maintained between logic blocks (OBs, FBs, FCs) and data blocks (DBs).

The effect of the "Including SDBs" option during an ONLINE/offline comparison of blocks in the SIMATIC Manager is described in the section: Comparing System Data Blocks (SDBs)

How Block Comparison Works: Logic Blocks

In the first step of the process, STEP 7 compares the time stamps for the interfaces of the logic blocks to be compared. If these time stamps are identical, STEP 7 assumes that the interfaces are identical.

If the time stamps are different, STEP 7 then compares the data types in the interfaces step-by-step by section. When a difference is found, STEP 7 determines the first difference in a section; that is, in each case the first difference in the respective declaration ranges. Multi-instances and UDTs are also included in the comparison. If the data types in the sections are the same, STEP 7 then compares the initial values of the variables. All differences are displayed.

In the second step, STEP 7 checks the code by network by network (in case the "Execute code comparison" option was not selected, the code will still be compared if the "Go to" button in the Program Editor is clicked.).

First, the inserted or deleted networks are detected. The results of the comparison will show networks that are only present in one block. These will have the comment "only in".

Then, the remaining networks are compared until the first difference in statements is found. Statements are compared in the following manner:

- For the setting "Absolute address has priority", based on the absolute address
- For the setting "Symbol has priority", based on the symbol

Note: If the blocks have symbolic priority and therefore also need to be compared in terms of symbols, the "Perform detailed comparison" option should be enabled.

Statements are considered to identical if their operators and addresses are the same.

If the blocks to be compared were programmed in different programming languages, STEP 7 performs the comparison based on the STL language.

Special feature of offline-offline comparisons:

In contrast to an offline-online comparison, in an offline-offline comparison, STEP 7also detects the presence of different variable names. This additional step is not possible for an offline-offline comparison since only replacement symbols are available online.

Comments for block networks and lines as well as other block attributes (such as S7-PDIAG information and messages) are excluded from comparisons.

How Block Comparison Works: Data Blocks

In the first step of the process, STEP 7 compares the time stamps for the interfaces of the data blocks to be compared (as for logic blocks). If these time stamps are identical, STEP 7 assumes that the data structures are identical.

If the interface time stamps are different, STEP 7 then compares the data structures until the first difference is found. If the data structures are in the sections are identical, STEP 7 then compares the initial values and current values. All differences are displayed.

Special feature of offline-offline comparisons:

In contrast to an offline-online comparison, in an offline-offline comparison, STEP 7 also detects the presence of different variable names. This additional step is not possible for an offline-offline comparison since only replacement symbols are available online.

Comments and structures for UDTs that are used in a data block are excluded from comparisons.

How Block Comparison Works: Data Types (UDT)

In the first step of the process, STEP 7 compares the time stamps for the interfaces of the data types to be compared (as for data blocks). If these time stamps are identical, STEP 7 assumes that the data structures are identical.

If the interface time stamps are different, STEP 7 then compares the data structures until the first difference is found. If the data structures are in the sections are identical, STEP 7 then compares the initial values. All differences are displayed.

How Block Comparison Works: Comparison in the Program Editor

1. Open the block to be compared to the loaded version.
2. Select the Options > Compare On-/Offline Partners menu command.
   - If the online Is are determined to be "different", then you can open the relevant network simply by double-clicking in its row.

How Block Comparison Works: Comparison in the SIMATIC Manager

1. In the SIMATIC Manager, select the block folder or the blocks to be compared.
2. Select the Options > Compare Blocks menu command.
3. In the "Compare Blocks" dialog box that is displayed, select the type of comparison (ONLINE/offline or Path1/Path2).
4. For a Path1/Path2 comparison: In the SIMATIC Manager, select the block folder or the blocks to be compared. These blocks are then automatically entered in the dialog box.
5. If also want to compare SDBs, select the "Including SDBs" check box.
6. If you also want to compare code, select the "Execute code comparison" check box. In a detailed comparison, in addition to the execution-related parts of the block (interface and code), any changes in the names for local variables and parameters are displayed. In addition, you can select the "Including blocks created in different programming languages" check box to compare blocks created in different programming languages (e.g. AWL, FUP....). In this case, the blocks are compared based on STL.

7. Confirm your settings in the dialog box by clicking "OK".

   The results of the comparison are displayed in the "Compare Blocks - Results" dialog box.

8. To display the properties (i.e. time of last modification, checksum, etc.) of the compared blocks, click on the "Details" button in this dialog box

   To open the program editor, in which the results of the comparison are displayed in the lower portion of the window, click the "Go to" button.

Note

When comparing an offline block folder with an online one, only loadable block types (OB, FB, ...) are compared. When comparing offline/online or Path1/Path2, all blocks included in a multiple selection are compared, even if some of then are not loadable ones (i.e. variable tables or UDTs).

9.3.7 Attributes for Blocks and Parameters

A description of the attributes can be found in the reference help on system attributes:

Jumps to Language Descriptions and Help on Blocks and System Attributes

9.4 Working with Libraries

Libraries serve to store reusable program components for SIMATIC S7. The program components can be copied to the library from existing projects or created directly in the library independently of other projects.

You can save yourself a lot of programming time and effort if you store blocks which you want to use many times in a library in an S7 program. You can copy them from there to the user program where they are required.

To create S7 programs in a library, the same functions apply as for projects – with the exception of debugging.

Creating Libraries

You can create libraries just like projects using the menu command **File > New**. The new library is created in the directory you set for libraries in the "General" tab when you selected the menu command **Options > Customize**.

Note

The SIMATIC Manager allows names that are longer than eight characters. The name of the library directory is, however, cut off to eight characters. Library names must therefore differ in their first eight characters. The names are not case-sensitive. When this directory is opened in the Browser, the full name is displayed again, but when browsing for the directory, only the shortened name appears.

Note that you cannot use blocks from libraries of a new STEP 7 version in projects of an older STEP 7 version.

Opening Libraries

To open an existing library, enter the menu command **File > Open**. Then select a library in the dialog boxes that follow. The library window is then opened.

Note

If you cannot find the library you require in the library list, click the "Browse" button in the "Open" dialog box. The standard Windows browser then displays the directory structure in which you can search for the library.

Note that the name of the file always corresponds to the original name of the library when it was created, meaning any name changes made in the SIMATIC Manager are not made at file level.

When you select a library it is added to the library list. You can change the entries in the library list using the menu command **File > Manage**.

Copying Libraries

You copy a library by saving it under another name using the menu command **File > Save As**.

You copy parts of a library such as programs, blocks, source files etc. using the menu command **Edit > Copy**.

Deleting a Library

You delete a library using the menu command **File > Delete**.

You delete parts of a library such as programs, blocks, source files etc. using the menu command **Edit > Delete**.

9.4.1 Hierarchical Structure of Libraries

Libraries are structured in a hierarchical manner, just like projects:

- Libraries can contain S7 programs.
- An S7 program can contain one "Blocks" folder (user program), one "Source Files" folder, one "Charts" folder, and one "Symbols" object (symbol table).
- The "Blocks" folder contains the blocks that can be downloaded to the S7 CPU. The variable tables (VAT) and user-defined data types in the folder are not downloaded to the CPU.
- The "Source Files" folder contains the source files for the programs created in the various programming languages.
- The "Charts" folder contains the CFC charts (only if the S7 CFC optional software is installed).

When you insert a new S7 program, a "Blocks" folder, "Source Files" folder (S7 only), and a "Symbols" object are inserted automatically in it.

9.4.2 Overview of the Standard Libraries

The STEP 7 standard software package contains the following standard libraries

- **System Function Blocks:** System Function Blocks (SFBs) and System Functions (SFCs)
- **S5-S7 Converting Blocks:** Blocks for converting STEP 5 programs
- **IEC Function Blocks:** Blocks for IEC functions, e.g. for processing time and date information, comparison operations, string processing and selecting the min./max. values
- **Organization Blocks:** Default organization blocks (OB)s
- **PID Control Blocks:** Function Blocks (FBs) for PID control
- **Communication Blocks:** Functions (FCs) and function blocks for SIMATICNET CPs.
- **TI-S7 Converting Blocks:** Standard functions for general use
- **Miscellaneous Blocks:** Blocks for time stamping and for TOD synchronization

When you install optional software packages, other libraries may be added.

Deleting and Installing the Supplied Libraries

You can delete the supplied libraries in SIMATIC Manager and then reinstall them. Run STPE 7 Setup to install the libraries..

Note

When you install STEP 7, the supplied libraries are always copied. If you edit these libraries, the modified libraries will be overwritten with the originals when STEP 7 is installed again.

For this reason, you should copy the supplied libraries before making any changes and then only edit the copies.

10 Basics of Creating Logic Blocks

10.1 Basics of Creating Logic Blocks

10.1.1 Structure of the Program Editor Window

The window of the program editor is split into the following areas:

Tables

The "Program Elements" tab displays a table of the program elements you can insert into your LAD, FBD or STL program. The "Call Structure" tab shows the call hierarchy of the blocks in the current S7 program.

Variable Declaration

The variable declaration is split in to the sections "Variable Table" and "Variable Detail View".

Instructions

The instruction list shows the block code that is to be processed by the PLC. It consists of one or several networks.

Details

The various tabs in the "Details" window provide functions, for example, for displaying error messages, editing symbols, providing address information, controlling addresses, comparing blocks and for editing error definitions for hardware diagnostics.

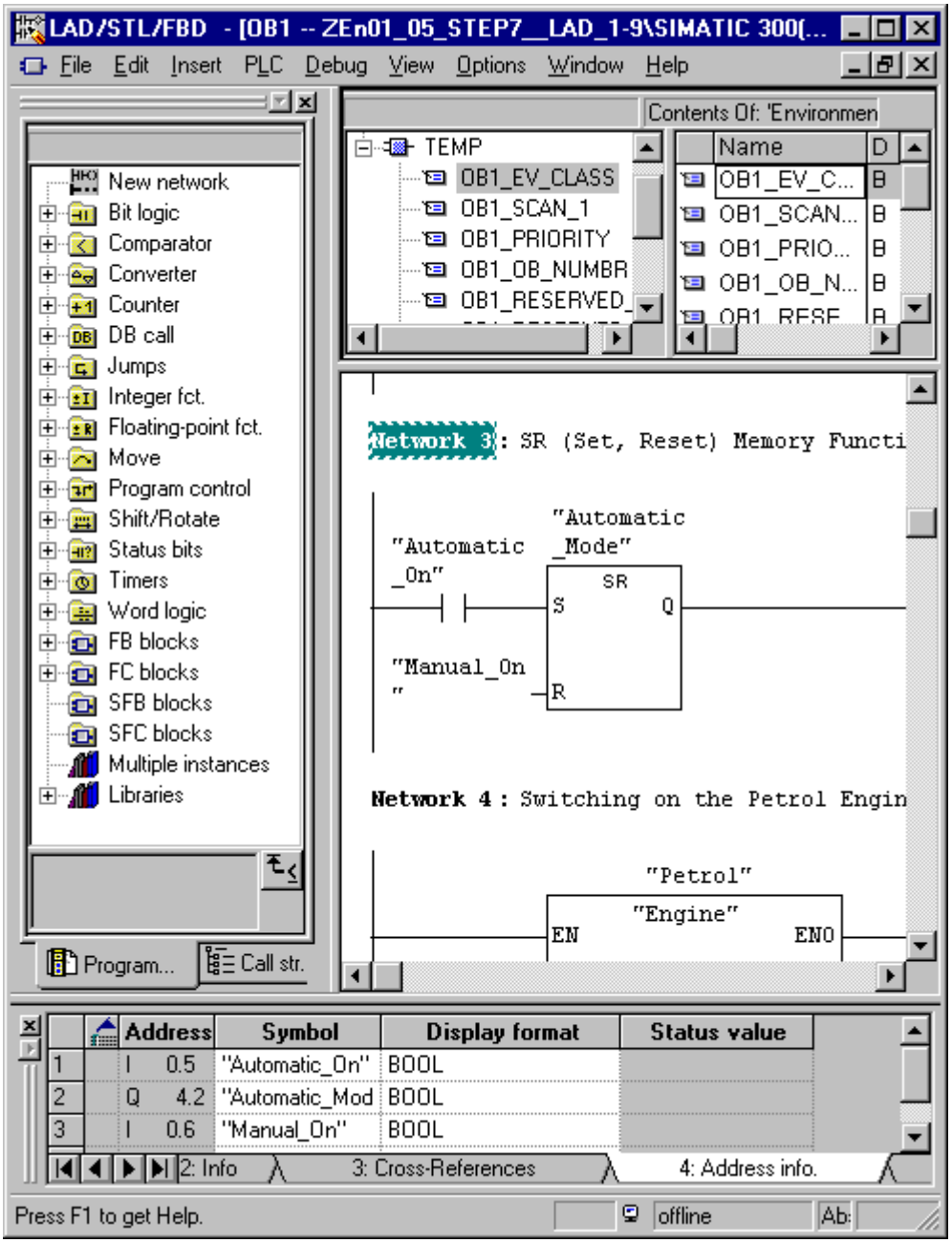

10.1.2 Basic Procedure for Creating Logic Blocks

Logic blocks (OBs, FBs, FCs) consist of a variable declaration section, a code section as well as their properties. When programming, you must edit the following three parts:

- **Variable declaration**: In the variable declaration you specify the parameters, system attributes for parameters, and local block-specific variables.
- **Code section**: In the code section you program the block code to be processed by the programmable controller. This consists of one or more networks. To create networks you can use, for example, the programming languages Ladder Logic (LAD), Function Block Diagram (FBD), or Statement List (STL).
- **Block properties:** The block properties contain additional information such as a time stamp or path that is entered by the system. In addition, you can enter your own details such as name, family, version, and author and you can assign system attributes for blocks.

In principle it does not matter in which order you edit the parts of a logic block. You can, of course, also correct them and add to them.

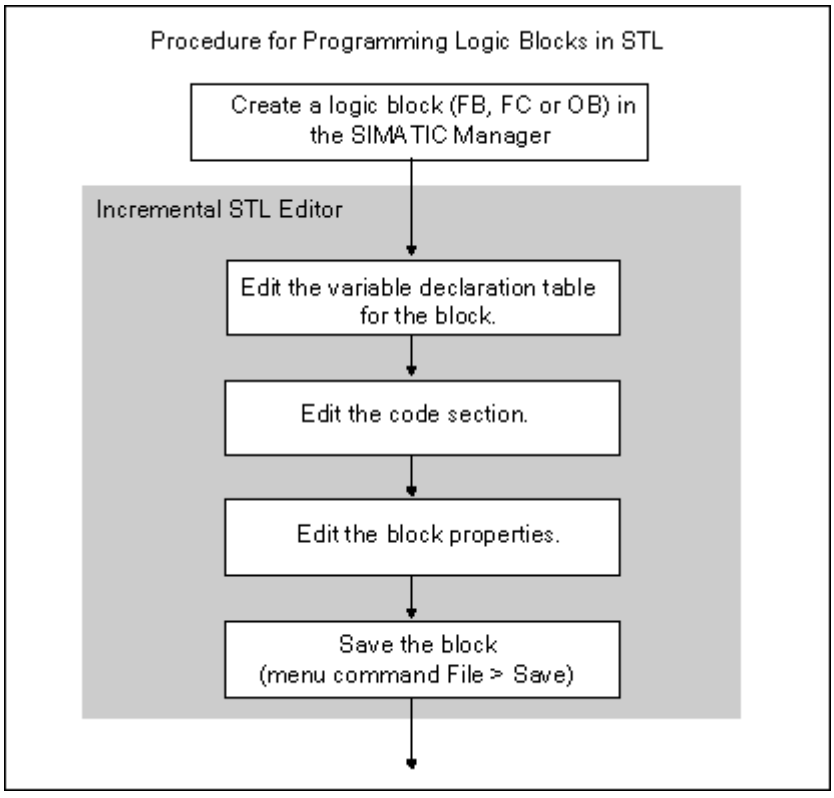

Note

If you want to make use of symbols in the symbol table, you should first check that they are complete and make any necessary corrections.

10.1.3 Default Settings for the LAD/STL/FBD Program Editor

Before you start programming, you should make yourself familiar with the settings in the editor in order to make it easier and more comfortable for you when programming.

Using the menu command **Options > Customize** you open a tabbed dialog box. In the various tabs you can make the following default settings for programming blocks, e.g. in the "General" tab:

- The fonts (type and size) for text and tables.
- Whether you want symbols and comments to be displayed with a new block.

You can change the settings for language, comments, and symbols during editing using the commands in the **View >…** menu.

You can change the colors used for highlighting, for example, networks or statement lines in the "LAD/FBD" tab.

10.1.4 Access Rights to Blocks and Source Files

When editing a project, a common database is often used, meaning that a number of personnel may want to access the same block or data source at the same time.

The read/write access rights are assigned as follows:

- Offline editing:
  When you attempt to open a block/source file, a check is made to see whether you have 'write' access to the object. If the block/source file is already open, you can only work with a copy. If you then attempt to save the copy, the system queries whether you want to overwrite the original or save the copy under a new name.
- Online editing:
  When you open an online block via a configured connection, the corresponding offline block is disabled, preventing it from being edited simultaneously.

10.1.5 Instructions from the Program Elements Table

The "Program elements" tab in the overview window provides LAD and FBD elements as well as already declared multiple instances, pre-configured blocks and blocks from libraries. You can access the tab via menu command **View > Tables**. You can also insert program elements in the code section using the menu command **Insert > Program Elements**.

Example of the "Program Elements" Tab in LAD

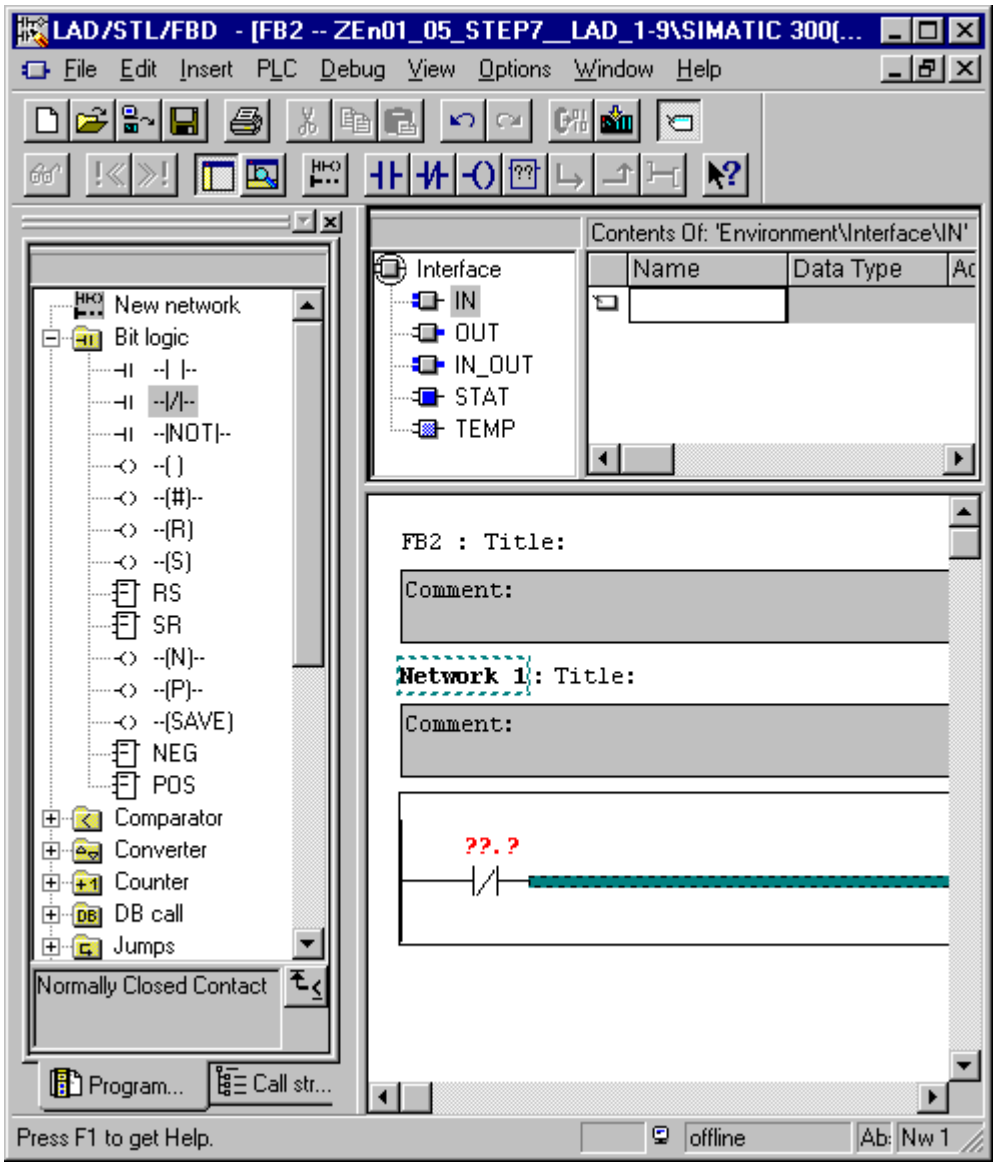

10.2 Editing the Variable Declaration

10.2.1 Using the Variable Declaration in Logic Blocks

After you open a logic block, a window opens that contains in the upper section the variable table and the variable detail view for the block as well as the instruction list in the lower section in which you edit the actual block code.

Example: Variable Views and Instruction List in STL

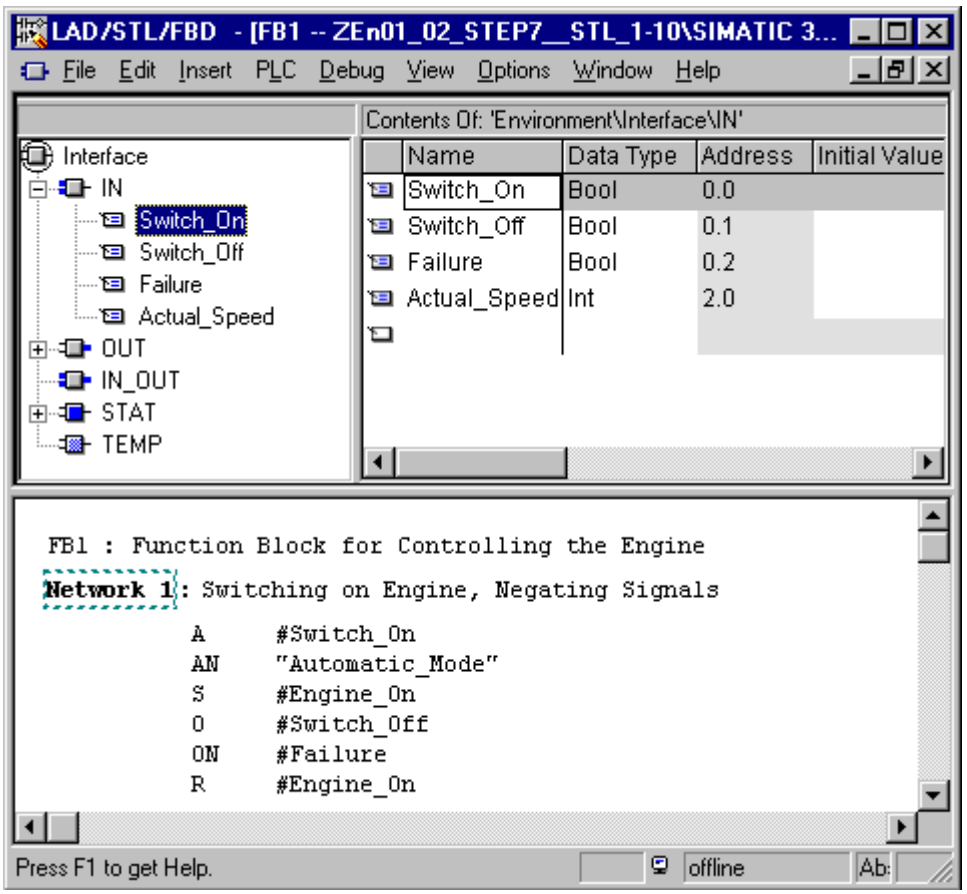

In the variable detail view, you specify the local variables and the formal parameters for the block as well as the system attributes for parameters. This has the following effects:

- During declaration, sufficient memory space is reserved for temporary variables in the local data stack, and in the case of function blocks, for static variables in the instance DB to be associated later.
- When setting input, output, and in/out parameters you also specify the "interface" for the call of a block in the program.
- When you declare the variables in a function block, these variables (with the exception of the temporary variables) also determine the data structure for every instance DB that is associated with the function block.

- By setting system attributes you assign special properties, for example, for the configuration of message and connection functions, for operator control and monitoring functions and the process control configuration.

10.2.2 Interaction Between The Variable Detail View And The Instruction List

The variable declaration and instruction list of logic blocks are closely related, because for programming the names specified in the variable declaration are used in the instruction list. All changes in the variable declaration will therefore influence the entire instruction list.

Action in the Variable Declaration	**Reaction in the Code Section**
Correct new entry	If invalid code present, previously undeclared variable now becomes valid
Correct name change without type change	Symbol is immediately shown everywhere with its new name
Correct name is changed to an invalid name	Code remains unchanged
Invalid name is changed to a correct name	If invalid code is present, it becomes valid
Type change	If invalid code is present, it becomes valid and if valid code is present, this may become invalid
Deleting a variable (symbolic name) used in the code	Valid code becomes invalid

Change to comments, faulty input of a new variable, change to an initial value, or deleting an unused variable has no effect on the instruction list.

10.2.3 Structure of the Variable Declaration Window

The variable declaration window consists of the overview of variables and of the variable detail view.

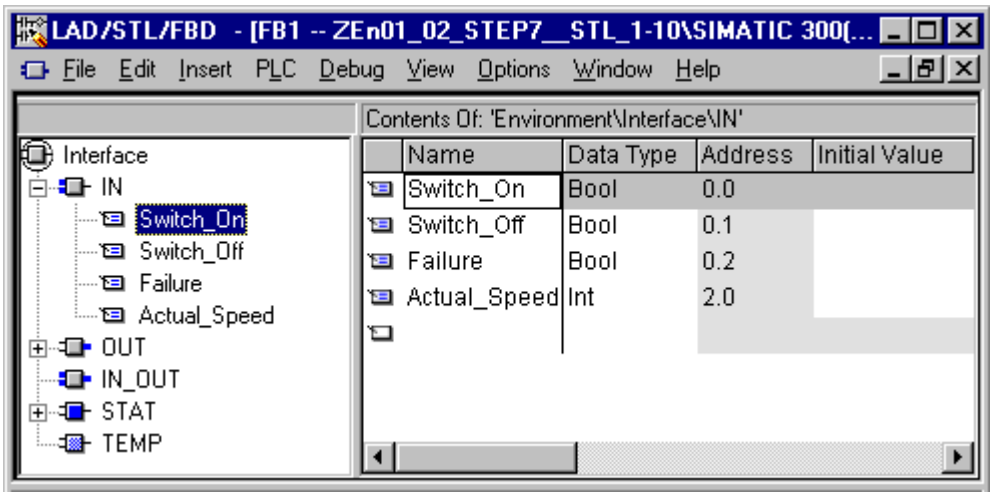

After you have generated and opened a new code block, a default variable table is displayed. It lists only the declaration types (in, out, in_out, stat, temp) permitted for the selected block, namely in the prescribed order. You can edit the default variable declaration that is displayed after you have generated a new OB.

Permitted data types of local data for the various block types are found under Assigning the Data Typs To Local Data Of Code Blocks.

10.3 Multiple Instances in the Variable Declaration

10.3.1 Using Multiple Instances

It is possible that you may want to or have to use a restricted number of data blocks for instance data owing to the performance (for example, memory capacity) of the S7 CPUs you are using. If other existing function blocks are called in an FB in your user program (call hierarchy of FBs), you can call these other function blocks without their own (additional) instance data blocks.

Use the following solution:

- Include the function blocks you want to call as static variables in the variable declaration of the calling function block.
- In this function block, call other function blocks without their own (additional) instance data blocks.
- This concentrates the instance data in one instance data block, meaning you can use the available number of data blocks more effectively.

The following example illustrates the solution described: FB2 and FB3 use the instance DB of the function block FB1 from which they were called.

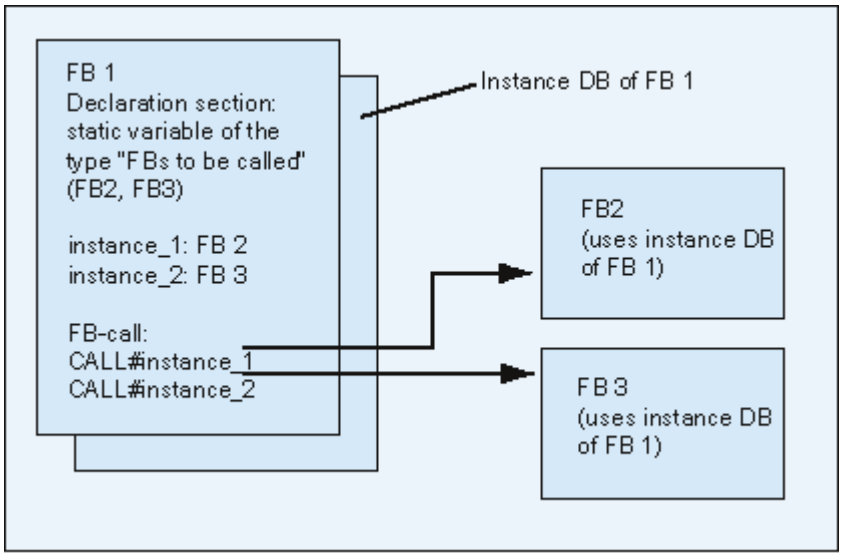

Only requirement: You must "tell" the calling function block which instances you are calling and what (FB) type these instances are. These details must be entered in the declaration window of the calling function block. The function block used must have at least one variable or parameter from the data area (VAR_TEMP cannot be used).

Do not use multiple instance data blocks if online changes are expected while the CPU is running. Surge-free reloading is only guaranteed when using instance data blocks.

10.3.2 Rules for Declaring Multiple Instances

The following rules apply to the declaration of multiple instances:

- Declaring multiple instances is only possible in function blocks that were created with STEP 7 from Version 2 onwards (see Block Attribute in the properties of the function block).
- In order to declare multiple instances, the function block must be created as a function block with multiple instance capability (default setting from STEP 7 Version x.x; can be deactivated in the editor using **Options > Customize**).
- An instance data block must be assigned to the function block in which a multiple instance is declared.
- A multiple instance can only be declared as a static variable (declaration type "stat").

Note

- You can also create multiple instances for system function blocks.
- If the function block was not created as being able to have multiple instances and you want it to have this property, you can generate a source file from the function block in which you then delete the block property CODE_VERSION1 and then compile the function block again.

10.3.3 Entering a Multiple Instance in the Variable Declaration Window

1. Open the function block from which the subordinate function blocks are to be called.
2. Define a static variable in the variable declaration of the calling function block for each call of a function block for whose instance you do not want to use an instance data block.
   - In the variable table, select hierarchy level "STAT".
   - Enter a name for the FB call in the "Name" column of the variable detail view
   - Enter the function block you want to call in the "Data type" column as an absolute address or with its symbolic name.
   - You can enter any explanations required in the comment column.

Calls in the Code Section

When you have declared multiple instances, you can use FB calls without specifying an instance DB.

Example: If the static variable "Name: Motor_1 , Data type: FB20" is defined, the instance can be called as follows:

```
Call Motor_1          // Call of FB20 without instance DB
```

10.4 General Notes on Entering Statements and Comments

10.4.1 Structure of the Code Section

In the code section you program the sequence for your logic block by entering the appropriate statements in networks, depending on the programming language chosen. After a statement is entered, the editor runs an immediate syntax check and displays any errors in red and italics.

The code section for a logic block generally comprises a number of networks that are made up of a list of statements.

In a code section you can edit the block title, block comments, network title, network comments, and statement lines within the networks.

Structure of the Code Section Using the STL Programming Language as an Example

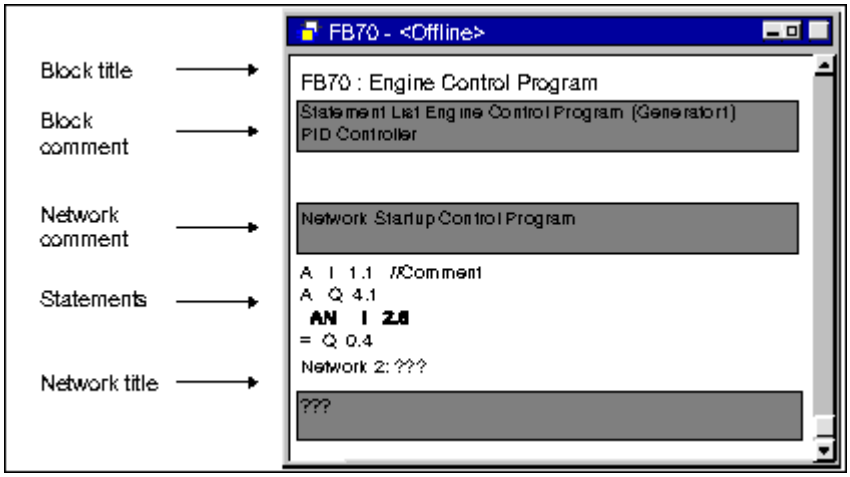

10.4.2 Procedure for Entering Statements

You can edit the parts of the code section in any order. We recommend you proceed as follows when you program a block for the first time:

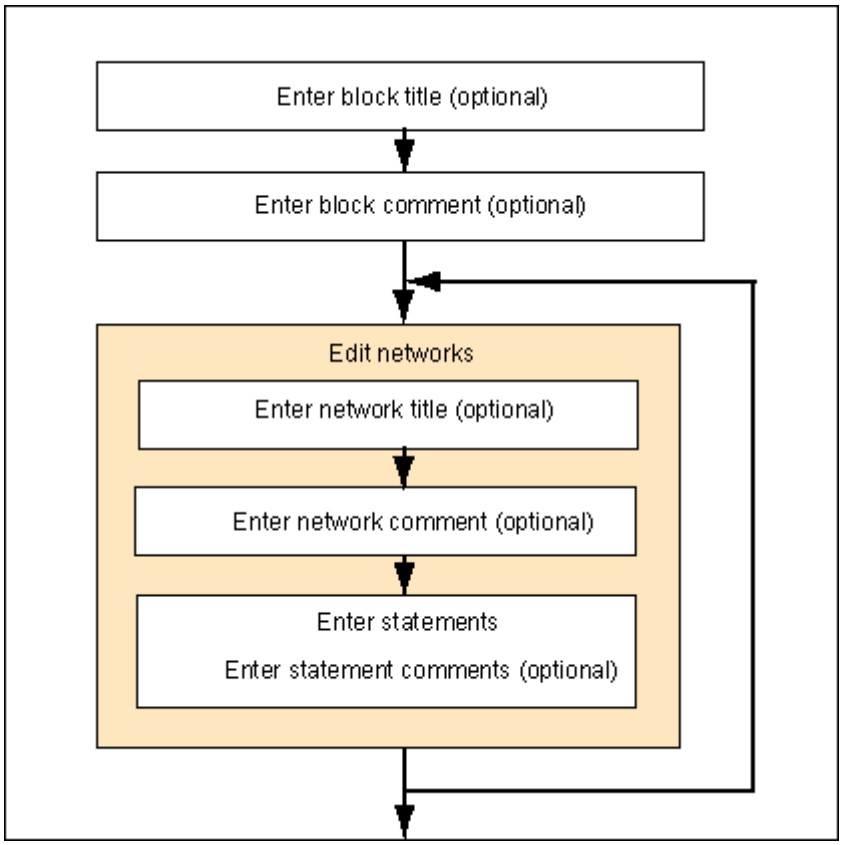

You can make changes in either overwrite mode or insert mode. You switch between modes using the INSERT key.

10.4.3 Entering Shared Symbols in a Program

Using the menu command Insert > Symbol you can insert symbols in the code section of your program. If the cursor is positioned at the beginning, the end, or within a string, the symbol is already selected that starts with this string - if such a symbol exists. If you change the string, the selection is updated in the list.

Separators for the beginning and end of a string are, for example, blank, period, colon. No separators are interpreted within shared symbols.

To enter symbols, proceed as follows:

1. Enter the first letter of the required symbol in the program.
2. Press CTRL and J simultaneously to display a list of symbols. The first symbol starting with the letter you entered is already selected.
3. Enter the symbol by pressing RETURN or select another symbol.

The symbol enclosed in quotation marks is then entered instead of the first letter.

In general the following applies: if the cursor is located at the beginning, the end, or within a string, this string is replaced by the symbol enclosed in quotation marks when inserting a symbol.

10.4.4 Entering Block Comments and Network Comments

1. Activate the comments with the menu command **View > Display with > Comments** (a check mark is visible in front of the menu command).
2. Position the cursor in the gray field below the block name or below the network name by clicking with the mouse. The gray comment field appears white and has a border.
3. Enter your comment in the open text box. You are allowed 64 Kbytes per block for block comments and network comments.
4. Exit the text box by clicking with the mouse outside the text box, by pressing the TAB key, or using the key combination SHIFT+TAB.
5. If you select the menu command **View > Display with > Comments** again, you can switch off the comments again (the check mark disappears).

10.4.5 Title and Comments for Blocks and Networks

Comments make your user program easier to read and therefore make commissioning and troubleshooting easier and more effective. They are an important part of the program documentation and should certainly be made use of.

Comments in LAD, FBD and STL Programs

The following comments are available:

- Block title: title for a block (max. 64 characters)
- Block comment: documents the whole logic block, for example, the purpose of the block
- Network title: title for a network (max. 64 characters)
- Network comment: documents the functions of a single network
- Comment column in the variable detail view: comments the declared local data
- Symbol comment: comments that were entered for an address when its symbolic name was defined in the symbol table.
  You can display these comments using the menu command **View > Display with > Symbol Information**.

In the code section of a logic block you can enter the block title and network title, and block comments or network comments.

Block Title or Network Title

To enter a block or network title, position the cursor on the word "Title" to the right of the block name or network name (for example, Network 1: Title:). A text box is opened in which you can enter the title. This can be up to 64 characters long.

Block comments pertain to the whole logic block. There they can comment the function of the block. Network comments pertain to the individual networks and document details about the network.

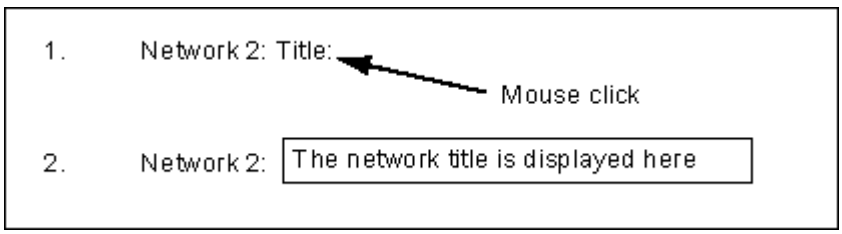

To assign network titles automatically, select menu command **Options > Settings** and click on the option "Automatic Assignment of Network Title" in the "General" tab. The symbol comment of the first address entered will then be applied as network title.

Block Comments and Network Comments

You can toggle the view of the gray comment fields on and off using the menu command **View > Display with > Comments**. A double-click on the comment field opens the text box in which you can now enter your remarks. You are allowed 64 Kbytes per block for block comments and network comments.

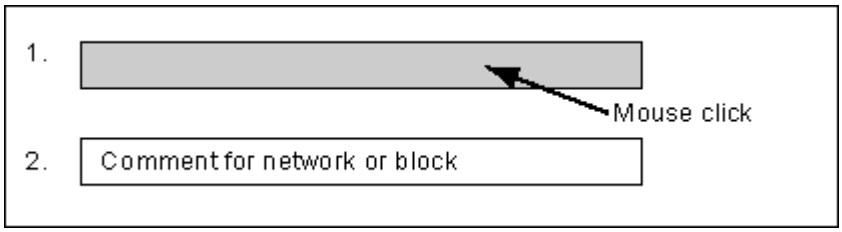

10.4.6 Working with Network Templates

When programming blocks, if you would like to use networks multiple times, you can store these networks in a library as network templates, complete with wildcards, if appropriate (for example, for addresses). The library must be available before you create the network template.

Creating a Network Template

Create a new library in the SIMATIC Manager if necessary. Select the menu command **Insert > Program > S7 Program** to insert a program into the library.

1. Open the block that contains the network(s) from which you want to create a network template.
2. In the opened block, replace the title, comment, or addresses with wildcards as required. You can use the strings %00 to %99 as wildcards. Wildcards for addresses are displayed in red. This is not a problem here because you will not be saving the block after you create the network template. You can replace the wildcards later with appropriate addresses when you insert the network template into a block.
3. Select "Network <No.>" of the network(s) you want to include in the network template.
4. Select the menu command Edit > Create Network Template.
5. Enter a meaningful comment for each wildcard used in the dialog box displayed.
6. Click the "OK" button.
7. Select the **source file folder** of the S7 program in your network template library in the browser that appears and enter a name for the network template.
8. Confirm your entry by clicking the "OK" button. The network template is stored in the selected library.
9. Close the block without saving it.

Inserting a Network Template in a Program

1. Open the block in which you want to insert the new network.
2. In the opened block, click in the network after which you want to insert a new network based on the network template.
3. Open the "Program Elements" tab (menu command **Insert > Program Elements**).
4. Open the "S7 Program" folder of the relevant library in the catalog.
5. Double-click the network template.
6. In the dialog box, enter the required replacements for the wildcards in the network template.
7. Click the "OK" button. The network template is then inserted after the current network.

Note

You can also drag and drop the template from the tab to the editor window.

10.4.7 Search Function for Errors in the Code Section

Errors in the code section are easy to recognize by their red color. To make it easier to navigate to errors that lie outside the visible area on the screen, the editor offers two search functions **Edit > Go To > Previous Error/Next Error**.

The search for errors goes beyond one network. This means that the whole code section is searched and not just one network or the area currently visible on the screen.

If you activate the status bar using the menu command **View > Status Bar**, notes on the errors found are displayed there.

You can also correct errors and make changes in overwrite mode. You toggle between insert mode and overwrite mode using the INSERT key.

10.5 Editing LAD Elements in the Code Section

10.5.1 Settings for Ladder Logic Programming

Setting the Ladder Logic Layout

You can set the layout for creating programs in the Ladder Logic representation type. The format you select (A4 portrait/landscape/maximum size) affects the number of Ladder elements that can be displayed in one rung.

1. Select the menu command **Options > Customize**.
2. Select the "LAD/FBD" tab in the following dialog box.
3. Select the required format from the "Layout" list box. Enter the required format size.

Settings for Printing

If you want to print out the Ladder code section, you should set the appropriate page format before you start to program the code section.

Settings in the "LAD/FBD" Tab

In the "LAD/FBD" tab which is accessed using the menu command **Options > Customize** you can make basic settings, e.g. concerning layout and address field width.

10.5.2 Rules for Entering Ladder Logic Elements

You will find a description of the Ladder Logic programming language representation in the "Ladder Logic for S7-300/400 - Programming Blocks" manual or in the Ladder Logic online help.

A Ladder network can consist of a number of elements in several branches. All elements and branches must be connected; the left power rail does not count as a connection (IEC 1131-3).

When programming in Ladder you must observe a number of guidelines. Error messages will inform you of any errors you make.

Closing a Ladder Network

Every Ladder network must be closed using a coil or a box. The following Ladder elements must not be used to close a network:

- Comparator boxes
- Coils for midline outputs _/(#)_/
- Coils for positive _/(P)_/ or negative _/(N)_/ edge evaluation

Positioning Boxes

The starting point of the branch for a box connection must always be the left power rail. Logic operations or other boxes can be present in the branch before the box.

Positioning Coils

Coils are positioned automatically at the right edge of the network where they form the end of a branch.

Exceptions: Coils for midline outputs _/(#)_/ and positive _/(P)_/ or negative _/(N)_/ edge evaluation cannot be placed either to the extreme left or the extreme right in a branch. Neither are they permitted in parallel branches.

Some coils require a Boolean logic operation and some coils must not have a Boolean logic operation.

- Coils which require Boolean logic:
  - Output _/( ), set output _/(S), reset output _/(R)
  - Midline output _/(#)_/, positive edge _/(P)_/, negative edge _/(N)_/
  - All counter and timer coils
  - Jump if Not _/(JMPN)
  - Master Control Relay On _/(MCR<)
  - Save RLO into BR Memory _/(SAVE)
  - Return _/(RET)
- Coils which do not permit Boolean logic:
  - Master Control Relay Activate _/(MCRA)
  - Master Control Relay Deactivate _/(MCRD)
  - Open Data Block _/(OPN)
  - Master Control Relay Off _/(MCR>)

All other coils can either have Boolean logic operations or not.

The following coils must **not be used as parallel outputs**:

- Jump if Not _/(JMPN)
- Jump _/(JMP)
- Call from Coil _/(CALL)
- Return _/(RET)

Enable Input/Enable Output

The enable input "EN" and enable output "ENO" of boxes can be connected but this is not obligatory.

Removing and Overwriting

If a branch consists of only one element, the whole branch is removed when the element is deleted.

When a box is deleted, all branches which are connected to the Boolean inputs of the box are also removed with the exception of the main branch.

The overwrite mode can be used to simply overwrite elements of the same type.

Parallel Branches

- Draw OR branches from left to right.
- Parallel branches are opened downwards and closed upwards.
- A parallel branch is always opened after the selected Ladder element.
- A parallel branch is always closed after the selected Ladder element.
- To delete a parallel branch, delete all the elements in the branch. When the last element in the branch is deleted, the branch is removed automatically.

Constants

Binary links cannot be assigned constants (i.e. TRUE or FALSE). Instead, use addresses of the data type BOOL.

10.5.3 Illegal Logic Operations in Ladder

Power Flow from Right to Left

No branches may be created which may cause power to flow in the reverse direction. The following figure shows an example: With signal state "0" at I 1.4 a power flow from right to left would result at I 6.8. This is not permitted.

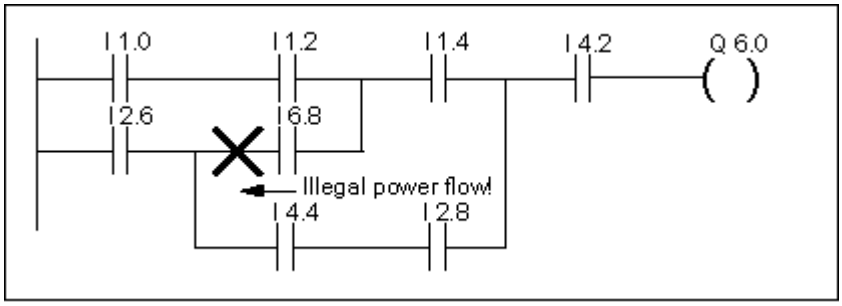

Short Circuit

No branches may be created which cause a short circuit. The following figure shows an example:

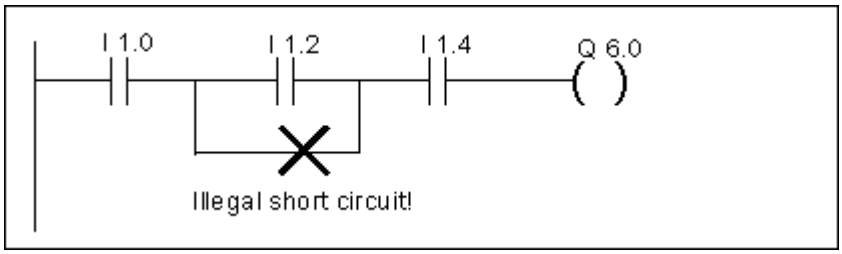

10.6 Editing FBD Elements in the Code Section

10.6.1 Settings for Function Block Diagram Programming

Setting the Function Block Diagram Layout

You can set the layout for creating programs in the Function Block Diagram representation type. The format you select (A4 portrait/landscape/maximum size) affects the number of FBD elements that can be displayed in one rung.

1. Select the menu command **Options > Customize**.
2. Select the "LAD/FBD" tab in the following dialog box.
3. Select the required format from the "Layout" list box. Enter the required format size.

Settings for Printing

If you want to print out the FBD code section, you should set the appropriate page format before you start to program the code section.

Settings in the "LAD/FBD" Tab

In the "LAD/FBD" tab which is accessed using the menu command **Options > Customize** you can make basic settings, e.g. concerning layout and address field width.

10.6.2 Rules for Entering FBD Elements

You will find a description of the programming language "FBD" in the "Function Block Diagram for S7-300/400 - Programming Blocks" manual or in the FBD online help.

An FBD network can consist of a number of elements. All elements must be interconnected (IEC 1131-3).

When programming in FBD, you must observe a number of rules. Error messages will inform you of any errors you make.

Entering and Editing Addresses and Parameters

When an FBD element is inserted, the characters ??? and ... are used as token characters for addresses and parameters.

- The red characters ??? stand for addresses and parameters which must be connected.
- The black characters ... stand for addresses and parameters which can be connected.

If you position the mouse pointer on the token characters, the expected data type is displayed.

Positioning Boxes

You can add standard boxes (flip flops, counters, timers, math operations, etc.) to boxes with binary logic operations (&, >=1, XOR). The exceptions to this rule are comparison boxes.

No separate logic operations with separate outputs can be programmed in a network. You can, however, assign a number of assignments to a string of logic operations with the help of a branch. The following figure shows a network with two assignments.

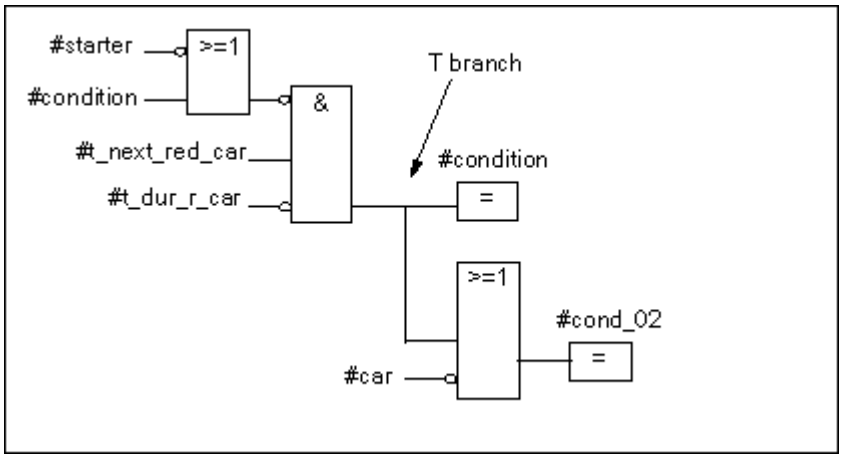

The following boxes can only be placed at the right edge of the logic string where they close the string:

- Set counter value
- Assign parameters and count up, assign parameters and count down
- Assign pulse timer parameters and start, assign extended pulse timer parameters and start
- Assign on-delay/off-delay timer parameters and start

Some boxes require a Boolean logic operation and some boxes must not have a Boolean logic operation.

Boxes which require Boolean logic:

- Output, set output, reset output _/[R]
- Midline output _/[#]_/, positive edge _/[P]_/, negative edge _/[N]_/
- All counter and timer boxes
- Jump if Not _/[JMPN]
- Master Control Relay On _/[MCR<]
- Save RLO into BR Memory _/[SAVE]
- Return _/[RET]

Boxes which do not permit Boolean logic:

- Master Control Relay Activate [MCRA]
- Master Control Relay Deactivate [MCRD]
- Open Data Block [OPN]
- Master Control Relay Off [MCR>]

All other boxes can either have Boolean logic operations or not.

Enable Input/Enable Output

The enable input "EN" and enable output "ENO" of boxes can be connected but this is not obligatory.

Removing and Overwriting

When a box is deleted, all branches which are connected to the Boolean inputs of the box are also removed with the exception of the main branch.

The overwrite mode can be used to simply overwrite elements of the same type.

Constants

Binary links cannot be assigned constants (i.e. TRUE or FALSE). Instead, use addresses of the data type BOOL.

10.7 Editing STL Statements in the Code Section

10.7.1 Settings for Statement List Programming

Setting the Mnemonics

You can choose between two sets of mnemonics:

- German
- English.

You set the mnemonics in the SIMATIC Manager with the menu command **Options > Customize** in the "Language" tab before opening a block. While editing a block you cannot change the mnemonics.

You edit the **block properties** in their own dialog box.

In the editor you can have a number of blocks open and edit them alternately as required.

10.7.2 Rules for Entering STL Statements

You will find a description of the Statement List programming language representation in the "Statement List for S7-300/400 - Programming Blocks" manual or in the STL online help (Language Descriptions).

When you enter statements in STL in incremental input mode, you must observe the following basic guidelines:

- The order in which you program your blocks is important. Called blocks must be programmed before calling blocks.
- A statement is made up of a label (optional), instruction, address, and comment (optional).
  Example: M001: A I 1.0 //Comment
- Every statement has its own line.
- You can enter up to 999 networks in a block.
- Each network can have up to approximately 2000 lines. If you zoom in or out, you can enter more or fewer lines accordingly.
- When entering instructions or absolute addresses, there is no distinction made between lower and upper case.

10.8 Updating Block Calls

10.8.1 Changing Interfaces

You can also use the incremental Editor to modify the interfaces of offline blocks that have been edited with STEP 7, version 5:

1. Make sure that all the blocks have been compiled with STEP 7, version 5. To do this, generate a source file for all the blocks and compile it.
2. Modify the interface of the relevant block.
3. Now open all the calling blocks one after another - the corresponding calls are displayed in red.
4. Select the menu command Edit > Block Call > Update.
5. Generate the relevant instance data blocks again.

Note

- Interface changes to a block opened online may cause the CPU to go into STOP mode.
- Rewiring block calls
  First modify the numbers of the called blocks and then execute the **Rewire** function to match up the calls.

10.9 Saving Logic Blocks

To enter newly created blocks or changes in the code section of logic blocks or in declaration tables in the programming device database, you must save the respective block. The data are then written to the hard disk of the programming device.

To save blocks on the hard disk of the programming device:

1. Activate the working window of the block you want to save.
2. Select one of the following menu commands:
   - **File > Save** saves the block under the same name.
   - **File > Save As** saves the block under a different S7 user program or under a different name. Enter the new path or new block name in the dialog box which then appears.

In both cases the block is saved only if its syntax contains no errors. Syntax errors are identified immediately when the block is created and are then displayed in red. These errors must be corrected before the block can be saved.

Note

You can also save blocks or source files beneath other projects or libraries in the SIMATIC Manager (by dragging & dropping, for example).

You can only save blocks or complete user programs to a memory card in the SIMATIC Manager.

If problems occur when saving or compiling large blocks, you should reorganize the project. Use the menu command **File > Reorganize** in the SIMATIC Manager to do this. Then try to save or compile again.

11 Creating Data Blocks

11.1 Basic Information on Creating Data Blocks

The data block (DB) is a block in which you can, for example, store values for your machine or plant to access. In contrast to a logic block that is programmed with one of the programming languages Ladder Logic, Statement List, or Function Block Diagram, a data block contains only the variable declaration section. This means the code section is irrelevant here and so is programming networks.

When you open a data block, you can either view the block in the declaration view or in the data view. You can toggle between the two views with the menu commands **View > Declaration View** and **View > Data View**.

Declaration View

You use the declaration view if you want to:

- View or determine the data structure of shared data blocks,
- View the data structure of data blocks with an associated user-defined data type (UDT), or
- View the data structure of data blocks with an associated function block (FB).

The structure of data blocks that are associated with a function block or user-defined data type cannot be modified. To modify them you must first modify the associated FB or UDT and then create a new data block.

Data View

You use the data view if you want to modify data. You can only display, enter, or change the actual value of each element in the data view. In the data view of data blocks, the elements of variables with complex data types are listed individually with their full names.

Differences between Instance Data Blocks and Shared Data Blocks

A shared data block is not assigned to a logic block. It contains values required by the plant or machine and can be called directly at any point in the program.

An instance data block is a block that is assigned directly to a logic block, such as a function block. The instance data block contains the data that were stored in a function block in the variable declaration table.

11.2 Declaration View of Data Blocks

With data blocks that are not globally shared, the declaration view cannot be changed.

Column	Explanation
Address	Displays the address that STEP 7 automatically assigns for the variable when you finish entering a declaration.
Declaration	This column is only displayed for instance data blocks. It shows you how the variables in the variable declaration of the function block are declared: • Input parameter (IN) • Output parameter (OUT) • In/out parameter (IN_OUT) • Static data (STAT)
Name	Enter the symbolic name you have to assign to each variable here.
Type	Enter the data type you want to assign to the variable (BOOL, INT, WORD, ARRAY, etc.). The variables can have elementary data types, complex data types, or user-defined data types.
Initial Value	Here you can enter the initial value if you do not want the software to use the default value for the data type entered. All values must be compatible with the data type. When you save a block for the first time, the initial value is used as the current value if you have not explicitly defined actual values for the variables. Please note: Initial values cannot be downloaded to the CPU.
Comment	Enter a comment in this field helps to document the variables. The comment can have up to 79 characters.

11.3 Data View of Data Blocks

The data view shows you the current values of all variables in the data block. You can only change these values in the data view. The table representation in this view is the same for all shared data blocks. For instance data blocks an additional "Declaration" column is displayed.

For variables with complex data types or user-defined data types, all elements are displayed in their own row with their full symbolic name in the data view. If the elements are in the IN_OUT area of an instance data block, the pointer points to the complex or user-defined data type in the "Actual Value" column.

The data view displays the following columns:

Column	Explanation
Address	Displays the address that STEP 7 automatically assigns for the variable.
Declaration	This column is only displayed for instance data blocks. It shows you how the variables in the variable declaration of the function block are declared: • Input parameter (IN) • Output parameter (OUT) • In/out parameter (IN_OUT) • Static data (STAT)
Name	The symbolic name assigned in the variable declaration for the variable. You cannot edit this field in the data view.
Type	Displays the data type defined for the variable. For shared data blocks, only the elementary data types are listed here because the elements are listed individually in the data view for variables with complex or user-defined data types. For instance data blocks the parameter types are also displayed, for in/out parameters (IN_OUT) with complex or user-defined data types, a pointer points to the data type in the "Actual Value" column.
Initial Value	The initial value that you entered for the variable if you do not want the software to use the default value for the specified data type. When you save a data block for the first time, the initial value is used as the current value if you have not explicitly defined actual values for the variables. Please note: Unlike with actual values, initial values cannot be downloaded to the CPU.
Actual Value	Offline: The value that the variable had when the data block was opened or to which you last changed it and saved it (even if you opened the data block online, this display is not updated). Online: The current value on opening the data block is displayed but not updated automatically. To update the view, press F5. You can edit this field if it does not belong to an in/out parameter (IN_OUT) with a complex or user-defined data type. All values must be compatible with the data type. Please note. Only current values can be downloaded to the CPU/
Comment	The comment entered to document the variable. You cannot edit this field in the data view.

11.4 Editing and Saving Data Blocks

11.4.1 Entering the Data Structure of Shared Data Blocks

If you open a data block which is not assigned to a user-defined data type or function block, you can define its structure in the declaration view of the data block. With data blocks which are not shared, the declaration view cannot be changed.

1. Open a shared data block, meaning a block which is not associated with a UDT or FB.
2. Display the declaration view of the data block if this view is not set already.
3. Define the structure by filling out the table displayed in accordance with the information below.

With data blocks which are not shared, the declaration view cannot be modified.

Column	Explanation
Address	Displays the address which STEP 7 automatically assigns for the variable when you finish entering a declaration.
Name	Enter the symbolic name you have to assign to each variable here.
Type	Enter the data type you want to assign to the variable (BOOL, INT, WORD, ARRAY, etc.). The variables can have elementary data types, complex data types, or user-defined data types.
Initial Value	Here you can enter the initial value if you do not want the software to use the default value for the data type entered. All values must be compatible with the data type. When you save a block for the first time, the initial value is used as the actual value if you have not explicitly defined actual values for the variables.
Comment	Entering an optional comment in this field helps to document the variable. The comment can have up to 79 characters.

11.4.2 Entering and Displaying the Data Structure of Data Blocks Referencing an FB (Instance DBs)

Input

When you associate a data block with a function block (instance DB), the variable declaration of the function block defines the structure of the data block. Any changes can only be made in the associated function block.

1. Open the associated function block (FB).
2. Edit the variable declaration of the function block.
3. Create the instance data block again.

Display

In the declaration view of the instance data block you can display how the variables in the function block were declared.

1. Open the data block.
2. Display the declaration view of the data block if this view is not set already.
3. See below for more information on the table displayed.

With data blocks which are not shared, the declaration view cannot be changed.

Column	Explanation
Address	Displays the address which STEP 7 automatically assigns for the variable.
Declaration	This column shows you how the variables in the variable declaration of the function block are declared: • Input parameter (IN) • Output parameter (OUT) • In/out parameter (IN_OUT) • Static data (STAT) The declared temporary local data of the function block are not in the instance data block.
Name	The symbolic name assigned in the variable declaration of the function block.
Type	Displays the data type assigned in the variable declaration of the function block. The variables can have elementary data types, complex data types, or user-defined data types. If additional function blocks are called within the function block for whose call static variables have been declared, a function block or a system function block (SFB) can also be specified here as the data type.
Initial Value	The initial value that you entered for the variable in the variable declaration of the function block if you do not want the software to use the default value. When you save a data block for the first time, the initial value is used as the actual value if you have not explicitly defined actual values for the variables.
Comment	The comment entered in the variable declaration for the function block to document the data element. You cannot edit this field.

Note

For data blocks that are assigned to a function block, you can only edit the actual values for the variables. To enter actual values for the variables, you must be in the data view of data blocks.

11.4.3 Entering the Data Structure of User-Defined Data Types (UDT)

1. Open the user-defined data type (UDT).
2. Display the declaration view if this view is not set already.
3. Define the structure of the UDT by determining the sequence of variables, their data type, and an initial value if required using the information in the table below.
4. You complete the entry of a variable by exiting the row with the TAB key or RETURN.

Column	**Explanation**
Address	Displays the address which STEP 7 automatically assigns for the variable when you finish entering a declaration.
Name	Enter the symbolic name you have to assign to each variable here.
Type	Enter the data type you want to assign to the variable (BOOL, INT, WORD, ARRAY, etc.). The variables can have elementary data types, complex data types, or their own user-defined data types.
Initial Value	Here you can enter the initial value if you do not want the software to use the default value for the data type entered. All values must be compatible with the data type. When you save an instance of the user-defined data type (or a variable, or a data block) for the first time, the initial value is used as the actual value if you have not explicitly defined actual values for the variables.
Comment	Entering a comment in this field helps to document the variables. The comment can have up to 79 characters.

11.4.4 Entering and Displaying the Structure of Data Blocks Referencing a UDT

Input

When you assign a data block to a user-defined data type, the data structure of the user-defined data type defines the structure of the data block. Any changes can only be made in the associated user-defined data type.

1. Open the user-defined data type (UDT).
2. Edit the structure of the user-defined data type.
3. Create the data block again.

Display

You can only display how the variables were declared in the user-defined data type in the declaration view of the data block.

1. Open the data block.
2. Display the declaration view of the data block if this view is not set already.
3. See below for more information on the table displayed.

The declaration view cannot be modified. Any changes can only be made in the associated user-defined data type.

Column	Explanation
Address	Displays the address which STEP 7 automatically assigns for the variable.
Name	The symbolic name assigned in the variable declaration of the user data type.
Type	Displays the data types assigned in the variable declaration of the user-defined data type. The variables can have elementary data types, complex data types, or user-defined data types.
Initial Value	The initial value that you entered for the variable in the user-defined data type if you do not want the software to use the default value. When you save a data block for the first time, the initial value is used as the actual value if you have not explicitly defined actual values for the variables.
Comment	The comment entered in the variable declaration for the user-defined data type to document the data element.

Note

For data blocks that are assigned to a user-defined data type, you can only edit the actual values for the variables. To enter actual values for the variables, you must be in the data view of data blocks.

11.4.5 Editing Data Values in the Data View

Editing actual values is only possible in the data view of data blocks.

1. If necessary, toggle to the table display in the data view using the menu command **View > Data View**.
2. Enter the required actual values for the data elements in the fields of the column "Actual Value." The actual values must be compatible with the data type of the data elements.

Any incorrect entries (for example, if an actual value entered is not compatible with the data type) made during editing are recognized immediately and shown in red. These errors must be corrected before saving the data block.

Note

Any changes to the data values are only retained once the data block has been saved.

11.4.6 Resetting Data Values to their Initial Values

Resetting data values is only possible in the data view of data blocks.

1. If necessary, toggle to the table display in the data view using the menu command **View > Data View**.
2. Select the menu command **Edit > Initialize Data Block** to do this.

All variables are assigned their intended initial value again, meaning the actual values of all variables are overwritten by their respective initial value.

Note

Any changes to the data values are only retained once the data block has been saved.

11.4.7 Saving Data Blocks

To enter newly created blocks or changed data values in data blocks in the programming device database, you must save the respective block. The data are then written to the hard disk of the programming device.

To save blocks on the hard disk of the programming device:

1. Activate the working window of the block you want to save.
2. Select one of the following menu commands:
   - **File > Save** saves the block under the same name.
   - **File > Save As** saves the block under a different S7 user program or under a different name. Enter the new path or new block name in the dialog box which then appears. With data blocks, you may not use the name DB0 because this number is reserved for the system.

In both cases the block is saved only if its syntax contains no errors. Syntax errors are identified immediately when the block is created and are then displayed in red. These errors must be corrected before the block can be saved.

Note

- You can also save blocks or source files beneath other projects or libraries in the SIMATIC Manager (by dragging & dropping, for example).
- You can only save blocks or complete user programs to a memory card in the SIMATIC Manager.
- If problems occur when saving or compiling large blocks, you should reorganize the project. Use the menu command **File > Reorganize** in the SIMATIC Manager to do this. Then try to save or compile again.

12 Parameter Assignment for Data Blocks

12.1 Assigning Parameters to Technological Functions

With the function "Parameter Assignment for Data Blocks" you can easily assign parameters to the temperature controller blocks FB 58 "TCONT_CP" and FB 59 "TCONT_S" that are supplied in the standard library and monitor them online.

To do so, proceed as follows:

1. In the SIMATIC Manager, open the STEP 7 standard library by selecting the menu command **File > Open > Libraries**.
2. Select "PID Control Blocks" and then click on "Blocks". Here you will find the following function blocks with the attribute "S7_techparam":
   - **FB 58 "TCONT_CP"**: Temperature controller for actuators with continuous or pulsing input signals
   - **FB 59 "TCONT_S"**: Temperature controller for integral-type actuators
3. Copy the appropriate function block (FB 58 or FB 59) from the standard library into your project.
4. Select the menu command **Insert > S7 Block > Data Block** to create an instance DB for the FB that you selected.
5. In the SIMATIC Manager, double-click the instance DB to open it and start the function "Parameter Assignment for Data Blocks".
   Result: The instance DB is opened in the technological view. You can now easily assign parameters to the instance DB and monitor it online.
6. Enter suitable controller values in the technological view. Any pertinent information, warnings or errors will be displayed in the message window. To go to the location of a warning or error, double-click on the corresponding warning or error.

Note

You can determine if blocks that have the system attribute "S7_techparam" by selecting a block in the SIMATIC Manager, selecting the menu command **Edit > Object Properties** and then opening the "Attributes" tab.

---

13 Creating STL Source Files

13.1 Basic Information on Programming in STL Source Files

You can enter your program or parts of it as an STL source file and then compile it into blocks in one step. The source file can contain the code for a number of blocks, which are then compiled as blocks in one compilation run.

Creating programs using a source file has the following advantages:

- You can create and edit the source file with any ASCII editor, then import it and compile it into blocks using this application. The compilation process creates the individual blocks and stores them in the S7 user program.
- You can program a number of blocks in one source file.
- You can save a source file even if it contains syntax errors. This is not possible if you create logic blocks using an incremental syntax check. However, the syntax errors are only reported once you compile the source file.

The source file is created in the syntax of the programming language representation Statement List (STL). The source file is given its structure of blocks, variable declaration, and networks using keywords.

When you create blocks in STL source files you should note the following:

- Guidelines for Programming STL Source Files
- Syntax and Formats for Blocks in STL Source Files
- Structure of Blocks in STL Source Files

13.2 Rules for Programming in STL Source Files

13.2.1 Rules for Entering Statements in STL Source Files

An STL source file consists mainly of continuous text. To enable the file to be compiled into blocks, you must observe certain structures and syntax rules.

The following general guidelines apply to creating user programs as STL source files:

Topic	Rule
Syntax	The syntax of the STL statements is the same as in the incremental Statement List editor. One exception to this is the CALL instruction.
CALL	In a source file, you enter parameters in brackets. The individual parameters are separated by a comma. Example: FC call (one line) CALL FC10 (param1 :=I0.0,param2 :=I0.1); Example: FB call (one line) CALL FB10, DB100 (para1 :=I0.0,para2 :=I0.1); Example: FB call (more than one line) CALL FB10, DB100 (para1 :=I0.0, para2 :=I0.1); Note: When calling a block, transfer the parameters in the defined order in the ASCII Editor. Otherwise the comment assignment for these lines may not match in the STL and source file views.
Upper/lower case	The editor in this application is not case-sensitive, the exception to this being system attributes and jump labels. When entering strings (data type STRING) you must also observe upper and lower case. Keywords are shown in upper case. When compiled, upper and lower case are not observed; therefore you can enter keywords in upper or lower case or a mixture of the two.
Semicolon	Designate the end of every STL statement and every variable declaration with a semicolon (;). You can enter more than one statement per line.
Double slash (//)	Begin every comment with a double slash (//) and end the comment with RETURN (or line feed).

13.2.2 Rules for Declaring Variables in STL Source Files

For every block in the source file you must declare the required variables.

The variable declaration section comes before the code section of the block.

The variables must - if they are being used - be declared in the correct sequence for declaration types. This means all variables of one declaration type are together.

For Ladder, Function Block Diagram, and Statement List you fill out a variable declaration table, but here you have to work with the relevant keywords.

Keywords for Variable Declaration

Declaration Type	Keywords	Valid for...
Input parameters	"VAR_INPUT" Declaration list "END_VAR"	FBs, FCs
Output parameters	"VAR_OUTPUT" Declaration list "END_VAR"	FBs, FCs
In/out parameters	"VAR_IN_OUT" Declaration list "END_VAR"	FBs, FCs
Static variables	"VAR" Declaration list "END_VAR"	FBs
Temporary variables	"VAR_TEMP" Declaration list END_VAR	OBs, FBs, FCs

The keyword END_VAR denotes the end of a declaration list.

The declaration list is a list of the variables of a declaration type in which default values can be assigned to the variables (exception: VAR_TEMP). The following example shows the structure of an entry in the declaration list:

```
Duration_Motor1  :  S5TIME  :=  S5T#1H_30M  ;
Variable            Data type       Default value
```

Note

- The variable symbol must start with a letter. You may not assign a symbolic name for a variable that is the same as one of the reserved keywords.
- If variable symbols are identical in the local declarations and in the symbol table, you can code local variables by placing # in front of the name and putting variables in the symbol table in quotation marks. Otherwise, the block interprets the variable as a local variable.

13.2.3 Rules for Block Order in STL Source Files

Called blocks precede the calling blocks. This means:

- The OB1 used in most cases, which calls other blocks, comes last. Blocks that are called from OB1 must precede it.
- User-defined data types (UDT) precede the blocks in which they are used.
- Data blocks with an associated user-defined data type (UDT) follow the user-defined data type.
- Shared data blocks precede all blocks from which they are called.
- Instance data blocks follow the associated function block.
- DB0 is reserved. You cannot create a data block with this name.

13.2.4 Rules for Setting System Attributes in STL Source Files

System attributes can be assigned to blocks and parameters. They control the message configuration and connection configuration, operator interface functions, and process control configuration.

The following applies when entering system attributes in source files:

- The keywords for system attributes always start with S7_.
- The system attributes are placed in braces (curly brackets).
- Syntax: {S7_identifier := 'string'}
  a number of identifiers are separated by ";".
- System attributes for blocks come before the block properties and after the keywords ORGANIZATION_ and TITLE.
- System attributes for parameters are included with the parameter declaration, meaning before the colon for the data declaration.
- A distinction is made between upper and lower case characters. This means that the correct use of upper and lower case characters is important when entering system attributes.

The system attributes for blocks can be checked or changed in incremental input mode using the menu command **File > Properties** under the "Attributes" tab.

The system attributes for parameters can be checked or changed in incremental input mode using the menu command **Edit > Object Properties**. The cursor must be positioned in the name field of the parameter declaration.

13.2.5 Rules for Setting Block Properties in STL Source Files

You can more easily identify the blocks you created if you use block properties and you can also protect these blocks from unauthorized changes.

The block properties can be checked or changed in incremental input mode using the menu command **File > Properties** under the "General - Part 1" and "General - Part 2" tabs.

The other block properties can only be entered in the source file.

The following applies in source files:

- Block properties precede the variable declaration section.
- Each block property has a line of its own.
- The line ends with a semicolon.
- The block properties are specified using keywords.
- If you enter block properties, they must appear in the sequence shown in the Table of Block Properties.
- The block properties valid for each block type are listed in the Assignment: Block Property to Block Type.

Note

The block properties are also displayed in the SIMATIC Manager in the object properties for a block. The properties AUTHOR, FAMILY, NAME, and VERSION can also be edited there.

Block Properties and Block Order

When entering block properties, you should observe the input sequence shown in the following table:

Order	Keyword / Property	Meaning	Example
1.	[KNOW_HOW_PROTECT]	Block protection; a block compiled with this option does not allow its code section to be viewed. The interface for the block can be viewed, but it cannot be changed.	KNOW_HOW_PROTECT
2.	[AUTHOR:]	Name of author: company name, department name, or other name (max. 8 characters without blanks)	AUTHOR : Siemens, but no keyword
3.	[FAMILY:]	Name of block family: for example, controllers (max. 8 characters without blanks)	FAMILY : controllers, but no keyword
4.	[NAME:]	Block name (max. 8 characters)	NAME : PID, but no keyword
5.	[VERSION: int1 . int2]	Version number of block (both numbers between 0 and 15, meaning 0.0 to 15.15)	VERSION : 3.10
6.	[CODE_VERSION1]	ID whether a function block can have multiple instances declared or not. If you want to declare multiple instances, the function block should not have this property	CODE_VERSION1
7.	[UNLINKED] for DBs only	Data blocks with the UNLINKED property are only stored in the load memory. They take up no space in the working memory and are not linked to the program. They cannot be accessed with MC7 commands. The contents of such a DB can be transferred to the working memory only with SFC 20 BLKMOV (S7-300. S7-400) or SFC 83 READ_DBL (S7-300C).	
8.	[NON_RETAIN]	This option is only effective if the CPU supports the Retain property of DBs. A data block with the "Non-Retain" property is not stored in retentive memory in such a CPU (for example CPU 317 V2.1) and is therefore reset to the load values at each power cycle and after every change from STOP to RUN.	
9.	READ_ONLY] only for DBs!	Write protection for data blocks; its data can only be read and not changed.	FAMILY= Examples VERSION= 3.10 READ_ONLY

13.2.6 Permitted Block Properties for Each Block Type

The following table shows which block properties can be declared for which block types:

Property	OB	FB	FC	DB	UDT
KNOW_HOW_PROTECT	•	•	•	•	–
AUTHOR	•	•	•	•	–
FAMILY	•	•	•	•	–
NAME	•	•	•	•	–
VERSION	•	•	•	•	–
UNLINKED	–	–	–	•	–
NON_RETAIN	–	–	–	•	–
READ_ONLY	–	–	–	•	–

Setting Block Protection with KNOW_HOW_PROTECT

You can protect your blocks from unauthorized users by setting block protection using the keyword KNOW_HOW_PROTECT when you program the block in the STL source file.

This block protection has the following consequences:

- If you want to view a compiled block at a later stage in the incremental STL, FBD, or Ladder editors, the code section of the block cannot be displayed.
- The variable declaration list for the block displays only the variables of the declaration types var_in, var_out, and var_in_out. The variables of the declaration types var_stat and var_temp remain hidden.
- The keyword KNOW_HOW_PROTECT is entered before any other block properties.

Setting Write Protection for Data Blocks with READ_ONLY

For data blocks, you can set up write protection so that the block is not overwritten during program processing. The data block must exist in the form of an STL source file to do this.

Use the keyword READ_ONLY in the source file to set write protection. This keyword must appear immediately before the variable declarations in a line on its own.

13.3 Structure of Blocks in STL Source Files

The blocks in STL source files are structured using keywords. Depending on the type of block, there are differences in the structure of:

- Logic blocks
- Data blocks
- User-defined data types (UDT)

13.3.1 Structure of Logic Blocks in STL Source Files

A logic block is made up of the following sections, each of which is identified by the corresponding keyword:

- Block start,
- identified by keyword and block number or block name, for example
  - "ORGANIZATION_BLOCK OB1" for an organization block,
  - "FUNCTION_BLOCK FB6" for a function block, or
  - "FUNCTION FC1 : INT" for a function. With functions the function type is also specified. This can be an elementary or complex data type (with the exception of ARRAY and STRUCT) and defines the data type of the return value (RET_VAL). If no value is to be returned, the keyword VOID is given.
- Optional block title introduced by the keyword "TITLE" (max. length of title: 64 characters)
- Additional comments, beginning with a double slash // at the start of the line
- Block properties (optional)
- Variable declaration section
- Code section, beginning with "BEGIN." The code section consists of one or more networks that are identified by "NETWORK." You cannot enter a network number.
- Optional network for each network used, introduced by the keyword "TITLE =" (max. length of title: 64 characters)
- Additional comments for each network, beginning with a double slash // at the start of the line
- Block end, identified by END_ORGANIZATION_BLOCK, END_FUNCTION_BLOCK, or END_FUNCTION
- A blank must be placed between the block type and the block number. The symbolic block name can be identified by quotation marks to ensure that the symbolic names of local variables and names in the symbol table remain unique.

13.3.2 Structure of Data Blocks in STL Source Files

A data block consists of the following areas that are introduced by their respective keywords:

- Block start, identified by keyword and block number or block name, for example, DATA_BLOCK DB26
- Reference to an associated UDT or function block (optional)
- Optional block title introduced by the keyword TITLE = (entries longer than 64 characters are cut off)
- Optional block comment, beginning with a double slash //
- Block properties (optional)
- Variable declaration section (optional)
- Assignment section with default values, beginning with BEGIN (optional)
- Block end, identified by END_DATA_BLOCK

There are three types of data block:

- Data blocks, user-defined
- Data blocks with an associated user-defined data type (UDT)
- Data blocks with an associated function block (known as "instance" data blocks)

13.3.3 Structure of User-Defined Data Types in STL Source Files

A user-defined data type consists of the following areas that are introduced by their respective keywords:

- Block start, identified by keyword TYPE and number or name, for example, TYPE UDT20
- Structured data type
- Block end, identified by END_TYPE

When you enter a user-defined data type, you must ensure that user-defined data types precede the blocks in which they are used.

13.4 Syntax and Formats for Blocks in STL Source Files

The format tables show the syntax and formats that you should observe when programming STL source files. The syntax is represented as follows:

- Each element is described in the right column.
- Any elements that must be entered are shown in quotation marks.
- The square brackets [...] mean that the contents of these brackets are optional.
- Keywords are given in upper case letters.

13.4.1 Format Table of Organization Blocks

The following table shows a brief list of the format for organization blocks in an STL source file:

Structure	**Description**
"ORGANIZATION_BLOCK" ob_no or ob_name	ob_no is the block number, for example: OB1; ob_name is the symbolic name of the block as defined in the symbol table
[TITLE=]	Block title (entries longer than 64 characters are cut off)
[Block comment]	Comments can be entered after "//"
[System attributes for blocks]	System attributes for blocks
[Block properties]	Block properties
Variable declaration section	Declaration of temporary variables
"BEGIN"	Keyword to separate the variable declaration section from the list of STL instructions
NETWORK	Start of a network
[TITLE=]	Network title (max. 64 characters)
[Network comment]	Comments can be entered after "//"
List of STL instructions	Block instructions
"END_ORGANIZATION_BLOCK"	Keyword to end organization block

13.4.2 Format Table of Function Blocks

The following table shows a brief list of the format for function blocks in an STL source file:

Structure	Description
"FUNCTION_BLOCK" fb_no or fb_name	fb_no is the block number, for example FB6; fb_name is the symbolic name of the block as defined in the symbol table
[TITLE=]	Block title (entries longer than 64 characters are cut off)
[Block comment]	Comments can be entered after "//"
[System attributes for blocks]	System attributes for blocks
[Block properties]	Block properties
Variable declaration section	Declaration of input, output, and in/out parameters, and temporary or static variables The declaration of the parameters may also contain the declarations of the system attributes for parameters.
"BEGIN"	Keyword to separate the variable declaration section from the list of STL instructions
NETWORK	Start of a network
[TITLE=]	Network title (max. 64 characters)
[Network comment]	Comments can be entered after "//"
List of STL instructions	Block instructions
"END_FUNCTION_BLOCK	Keyword to end function block

13.4.3 Format Table of Functions

The following table shows a brief list of the format for functions in an STL source file:

Structure	Description
"FUNCTION" fc_no : fc_type or fc_name : fc_type	fc_no is the block number, for example FC5; fc_name is the symbolic name of the block as defined in the symbol table; fc_type is the data type of the return value (RET_VAL) of the function. This can be an elementary or complex data type (with the exception of ARRAY and STRUCT) or VOID. If you want to use system attributes for the return value (RET_VAL), you must enter the system attributes for parameters in front of the colon for the data declaration.
[TITLE=]	Block title (entries longer than 64 characters are cut off)
[Block comment]	Comments can be entered after "//"
[System attributes for blocks]	System attributes for blocks
[Block properties]	Block properties
Variable declaration section	Declaration of input, output, and in/out parameters, and temporary variables
"BEGIN"	Keyword to separate the variable declaration section from the list of STL instructions
NETWORK	Start of a network
[TITLE=]	Network title (max. 64 characters)
[Network comment]	Comments can be entered after "//"
List of STL instructions	Block instructions
"END_FUNCTION"	Keyword to end function

13.4.4 Format Table of Data Blocks

The following table shows a brief list of the format for data blocks in an STL source file:

Structure	Description
"DATA_BLOCK" db_no or db_name	db_no is the block number, for example DB5; db_name is the symbolic name of the block as defined in the symbol table
[TITLE=]	Block title (entries longer than 64 characters are cut off)
[Block comment]	Comments can be entered after "//"
[System attributes for blocks]	System attributes for blocks
[Block properties]	Block properties
Declaration section	Instance DB: specifies UDT or FB to which the block relates as block number or name according to the symbol table. Global DB: specifies the variables with their data type and start value (optional)
"BEGIN"	Keyword to separate the declaration section from the list of value assignments
[Assignment of current values]	Variables can have specific current values assigned. Individual variables either have constants assigned or a reference is made to other blocks.
"END_DATA_BLOCK"	Keyword to end data block

13.5 Creating STL Source Files

13.5.1 Creating STL Source Files

The source file must be created in the source file folder beneath the S7 program. You can create source files in the SIMATIC Manager or the editor window.

Creating Source Files in the SIMATIC Manager

1. Open the appropriate "Source Files" folder by double-clicking on it.
2. To insert an STL source file select the menu command **Insert > S7 Software > STL Source File**.

Creating Source Files in the Editor Window

1. Select the menu command **File > New**.
2. In the dialog box, select the source file folder of the same S7 program that contains the user program with the blocks.
3. Enter a name for the new source file.
4. Confirm with "OK".

The source file is created under the name you entered and is displayed in a window for editing.

13.5.2 Editing S7 Source Files

The programming language and editor with which a source file is edited can be set in the object properties for the source file. This ensures that the correct editor and the correct programming language are started when the source file is opened for editing. The STEP 7 Standard package supports programming in STL source files.

Other programming languages are also available as optional packages. You can only select the menu command to insert the source file if the corresponding software option is loaded on your computer.

To edit an S7 source file, proceed as follows:

1. Open the appropriate "Source Files" folder by double-clicking on it.
2. Start the editor required for editing as follows:
   - Double-click the required source file in the right half of the window.
   - Select the required source file in the right half of the window and select the menu command **Edit > Open Object**.

13.5.3 Setting The Layout of Source Code Text

To improve readability of text in source files, select menu command **Options > Settings** and the "Source Code" tab. Specify the font, font style and color for the various elements of the source code.

For example, you can specify to display line numbers and to display keywords in upper case letters.

13.5.4 Inserting Block Templates in STL Source Files

Block templates for organization blocks (OB), function blocks (FB), functions (FC), data blocks (DB), instance data blocks, data blocks with associated user-defined data types, and user-defined data types (UDT) are available for programming in STL source files. The block templates make it easier to enter blocks in your source file and to observe syntax and structure guidelines.

To insert a block template, proceed as follows:

1. Activate the window of the source file in which you want to insert a block template.
2. Position the cursor at the point in the file after which you want to insert the block template.
3. Select one of the menu commands Insert > Block Template > OB/FB/FC/DB/Instance DB/DB Referencing UDT/UDT.

The block template is inserted in the file after the cursor position.

13.5.5 Inserting the Contents of Other STL Source Files

You can insert the contents of other source files into your STL source file.

Proceed as follows:

1. Activate the window of the source file in which you want to insert the contents of another source file.
2. Position the cursor at the location in the file after which you want to insert the source file.
3. Select the menu command **Insert > Object > File**.
4. Select the required source file in the dialog box which appears.

The contents of the selected source file are inserted after the cursor position. Line feeds (carriage returns) are retained.

13.5.6 Inserting Source Code from Existing Blocks in STL Source Files

You can insert the source code from other blocks into your STL source file which were created in Ladder, Function Block Diagram, or Statement List. This is possible for organization blocks (OB), function blocks (FB), functions (FC), data blocks (DB), and user-defined data types (UDT).

Proceed as follows:

1. Activate the window of the source file in which you want to insert a block.
2. Position the cursor at the location in the file after which you want to insert the source code from the block.
3. Select the menu command **Insert > Object > Block**.
4. Select the required block in the dialog box which appears.

An equivalent source file is generated from the block. The contents of the source file are inserted after the cursor position.

13.5.7 Inserting External Source Files

You can create and edit a source file with any ASCII editor, then import it into a project and compile it into individual blocks using this application. To do this, you must import the source files into the

"Source Files" folder of the S7 program in whose S7 user program the blocks created during compilation are to be stored.

To insert an external source file, proceed as follows:

1. Select the source file folder of the S7 program in which the external source files are to be imported.
2. Select the menu command Insert > External Source File.
3. In the dialog box which appears, enter the source file you want to import.

The file name of the source file you are importing must have a valid file extension. STEP 7 uses the file extension to determine the source file type. This means, for example, that STEP 7 creates an STL source file when it imports a file with the extension **.AWL**. Valid file extensions are listed in the dialog box under "File Type."

Note

You can also use the menu command **Insert > External Source File** to import source files you created with STEP 7 version 1.

13.5.8 Generating STL Source Files from Blocks

You can generate an STL source file which you can edit with any text editor from existing blocks. The source file is generated in the source file folder of the S7 program.

To generate a source file from a block, proceed as follows:

1. In the program editor, select the menu command **File > Generate Source File**.
2. In the dialog box, select the source file folder in which you want to create the new source file.
3. Enter a name for the source file in the text box.
4. In the "Select STEP 7 Blocks" dialog box, select the block(s) which you want to generate as the given source file. The selected blocks are displayed in the right list box.
5. Confirm with "OK."

One continuous STL source file is created from the selected blocks and is displayed in a window for editing.

13.5.9 Importing Source Files

To import a source file from any directory into a project:

1. In the SIMATIC Manager, select the source file folder into which you want to import the source file.
2. Select the menu command Insert > External Source File.
3. In the dialog box displayed, select the destination directory and the source file to be imported.
4. Click the "Open" button.

13.5.10 Exporting Source Files

To export a source file from a project to any destination directory:

1. Select the source file in the source file folder.
2. Select the menu command **Edit > Export Source File** in the SIMATIC Manager.
3. Enter the destination directory and file name in the dialog box displayed.
4. Click the "Save" button.

Note

If the object name does not have a file extension, a file extension derived from the file type is added to the file name. For example, the STL source file "**prog**" is exported to the file "**prog.awl**."

If the object name already has a valid file extension, this is retained and not changed. For example, the STL source file "**prog.awl**" is exported to the file "**prog.awl**."

If an object name has an invalid file extension (meaning a period is contained in the name), no file extension is added.

You will find a list of valid file extensions in the "Export Source File" dialog box under "File type."

13.6 Saving and Compiling STL Source Files and Executing a Consistency Check

13.6.1 Saving STL Source Files

You can save an STL source file at any time in its current state. The program is not compiled and no syntax check is run, meaning any errors are saved as well.

Syntax errors are detected and reported only when the source file is compiled or following a consistency check.

To save a source file under the same name:

1. Activate the window for the source file you want to save.
2. Select the menu command **File > Save**.

To save a source file under a new name/in another project:

1. Activate the window for the source file you want to save.
2. Select the menu command **File > Save As**.
3. In the dialog box, select the source file folder in which you want to save the source file and enter its new name.

13.6.2 Checking Consistency in STL Source Files

Using the menu command **File > Consistency Check** you can display any syntax errors in the STL source file. In contrast to compiling, no blocks are generated.

When the consistency check is completed, a dialog box is displayed showing you the total number of errors found.

Any errors that are found are listed individually in the lower part of the window with a line reference. Correct these errors before compiling the source file so that all the blocks can be created.

13.6.3 Debugging STL Source Files

The active window for source files is split into two. The following errors are listed in the lower half:

- Errors found after compilation was initiated via menu command **File > Compile**.
- Errors found after a consistency check was initiated via menu command **File > Consistency Check**.

To find the location of an error in a source file, position the cursor on the "Error" tab of the message window. The faulty element is automatically highlighted in the code section and an error message is output at the status bar.

13.6.4 Compiling STL Source Files

Requirements

In order to be able to compile the program you created in a source file into blocks, the following requirements must be fulfilled:

- Only source files which are stored in the "Source Files" folder beneath an S7 program can be compiled.
- As well as the "Source Files" folder, a "Blocks" folder must also lie beneath the S7 program in which the blocks created during compilation can be stored. The blocks programmed in the source file are only created if the source file was compiled without error. If there are a number of blocks programmed in a source file, only those which contain no errors are created. You can then open these blocks, edit them, download them to the CPU, and debug them individually.

Procedure in the Editor

1. Open the source file you want to compile. The source file must be in the source file folder of the S7 program in whose S7 user program the compiled blocks are to be stored.
2. Select the menu command **File > Compile**.
3. The "Compiler Report" dialog box is displayed showing the number of lines compiled and syntax errors found.

The blocks specified for the file are only created once the source file has been compiled without errors. If there are a number of blocks programmed in a source file, only those which contain no errors are created. Warnings of errors do not prevent blocks being created.

Any syntax errors detected during compilation are shown in the lower part of the working window and must be corrected before the respective blocks can be created.

Procedure in the SIMATIC Manager

1. Open the appropriate "Source Files" folder by double-clicking on it.
2. Select one or more source files that you want to compile. You cannot start a compilation run for a closed source file folder to compile all the source files in it.
3. Select the menu command **File > Compile** to start compilation. The correct compiler is called for the source file you selected. The successfully compiled blocks are then stored in the block folder beneath the S7 program.
   Any syntax errors detected during compilation are displayed in a dialog box and must be corrected so that the blocks where the errors were found can be created as well.

13.7 Examples of STL Source Files

13.7.1 Examples of Declaring Variables in STL Source Files

Variables of Elementary Data Type

```
                    // Comments are separated from the declaration section by a double slash.
VAR_INPUT           // Keyword for input variable
                    in1 : INT;// Variable name and type are separated by ":"
                    in3 : DWORD;      // Every variable declaration is terminated with a semicolon
                    in2 : INT := 10;     // Optional setting for an initial value in the declaration
END_VAR             // End declaration of variables of the same declaration type
VAR_OUTPUT          // Keyword for output variable
                    out1 : WORD;
END_VAR             // Keyword for temporary variable
VAR_TEMP
                    temp1 : INT;
END_VAR
```

Variable of Data Type Array

```
VAR_INPUT           // Input variable
                    array1 : ARRAY [1..20] of INT;         // array1 is a one-dimensional array
                    array2 : ARRAY [1..20, 1..40] of DWORD;      // array2 is a two-dimensional array
END_VAR
```

Variables of Data Type Structure

```
VAR_OUT             // Output variable
OUTPUT1:            STRUCT// OUTPUT1 has the data type STRUCT
                     var1 : BOOL;       // Element 1 of the structure
                     var2 : DWORD;    // Element 2 of the structure
                     END_STRUCT;    // End of the structure
END_VAR
```

13.7.2 Example of Organization Blocks in STL Source Files

```
ORGANIZATION_BLOCK OB1
TITLE = Example for OB1 with different block calls
//The 3 networks show block calls
//with and without parameters

{S7_pdiag := 'true'}                                    //System attribute for blocks
AUTHOR                  Siemens
FAMILY                  Example
NAME                    Test_OB
VERSION                 1.1
VAR_TEMP
Interim value : INT;                    // Buffer
END_VAR

BEGIN

NETWORK
TITLE = Function call transferring parameters
// Parameter transfer in one line
CALL FC1 (param1 :=I0.0,param2 :=I0.1);


NETWORK
TITLE = Function block call
// transferring parameters
// Parameter transfer in more than one line
CALL Traffic light control , DB6 (          // Name of FB, instance data block
dur_g_p         := S5T#10S,             // Assign actual values to parameters

del_r_p         := S5T#30S,
starter         := TRUE,
t_dur_y_car     := T 2,
t_dur_g_ped     := T 3,
t_delay_y_car   := T 4,
t_dur_r_car     := T 5,
t_next_red_car  := T 6,
r_car           := "re_main",           // Quotation marks show symbolic
y_car           := "ye_main",           // names entered in symbol table
g_car           := "gr_main",
r_ped           := "re_int",
g_ped           := "gr_int");


NETWORK
TITLE = Function block call
// transferring parameters
// Parameter transfer in one line
CALL FB10, DB100 (para1 :=I0.0,para2 :=I0.1);

END_ORGANIZATION_BLOCK
```

13.7.3 Example of Functions in STL Source Files

```
FUNCTION FC1: VOID
// Only due to call
VAR_INPUT
  param1 : bool;
  param2 : bool;
END_VAR
begin
end_function



FUNCTION FC2 : INT
TITLE = Increment number of items
// As long as the value transferred is < 1000, this function
// increases the transferred value. If the number of items
// exceeds 1000, "-1" is returned via the return value
// for the function (RET_VAL).

AUTHOR                  Siemens
FAMILY                  Throughput check
NAME            :       INCR_ITEM_NOS
VERSION         :       1.0

VAR_IN_OUT
ITEM_NOS : INT;                         // No. of items currently manufactured
END_VAR

BEGIN

NETWORK
TITLE = Increment number of items by 1
// As long as the current number of items lies below 1000,
// the counter can be increased by 1
L ITEM_NOS; L 1000;                             // Example for more than one
> I; JC ERR;                                    // statement in a line.
L 0; T RET_VAL;
L ITEM_NOS; INC 1; T ITEM_NOS; BEU;
ERR: L -1;
T RET_VAL;
END_FUNCTION
```

```
FUNCTION FC3 {S7_pdiag := 'true'} : INT
TITLE = Increment number of items
// As long as the value transferred is < 1000, this function
//increases the transferred value. If the number of items
//exceeds 1000, "-1" is returned via the return value
//for the function (RET_VAL).
//
//RET_VAL has a system attribute for parameters here

AUTHOR          :       Siemens
FAMILY          :       Throughput check
NAME            :       INCR_ITEM_NOS
VERSION         :       1.0

VAR_IN_OUT
ITEM_NOS {S7_visible := 'true'}: INT;     // No. of items currently manufactured
//System attributes for parameters
END_VAR

BEGIN

NETWORK
TITLE = Increment number of items by 1
// As long as the current number of items lies below 1000,
// the counter can be increased by 1
L ITEM_NOS; L 1000;                       // Example for more than one
> I; JC ERR;                              // statement in a line.
L 0; T RET_VAL;
L ITEM_NOS; INC 1; T ITEM_NOS; BEU;
ERR: L -1;
T RET_VAL;

END_FUNCTION
```

13.7.4 Example of Function Blocks in STL Source Files

```
FUNCTION_BLOCK FB6
TITLE = Simple traffic light switching
// Traffic light control of pedestrian crosswalk
// on main street

{S7_m_c := 'true'}          //System attribute for blocks
AUTHOR          :           Siemens
FAMILY          :           Traffic light
NAME            :           Traffic light01
VERSION         :           1.3

VAR_INPUT

starter         :           BOOL    :=      FALSE;  // Cross request from pedestrian
t_dur_y_car     :           TIMER;          // Duration green for pedestrian
t_next_r_car    :           TIMER;          // Duration between red phases for cars
t_dur_r_car     :           TIMER;
number          {S7_server := 'alarm_archiv'; S7_a_type := 'alarm_8'} :DWORD;
// Number of cars
// number has system attributes for parameters

END_VAR
VAR_OUTPUT

g_car           :           BOOL            :=      FALSE;  // GREEN for cars_

END_VAR
VAR
condition       :           BOOL    :=      FALSE;  // Condition red for cars
END_VAR
```

```
BEGIN
NETWORK
TITLE = Condition red for main street traffic
// After a minimum duration has passed, the request for green at the
// pedestrian crosswalk forms the condition red
// for main street traffic.
                A(;
                A       #starter;       // Request for green at pedestrian crosswalk and
                A       #t_next_r_car;  // time between red phases up
                O       #condition;     // Or condition for red
                );
                AN      #t_dur_y_car;   // And currently no red light
                =       #condition;     // Condition red
NETWORK
TITLE = Green light for main street traffic
                AN      #condition;     // No condition red for main street traffic
                =       #g_car;         // GREEN for main street traffic
NETWORK
TITLE = Duration of yellow phase for cars
                // Additional program required for controlling
                // traffic lights

END_FUNCTION_BLOCK

FUNCTION_BLOCK FB10
VAR_INPUT
  para1 : bool;
  para2: bool;
end_var
begin
end_function_block

data_block db10
FB10
begin
end_data_block

data_block db6
FB6
begin
end_data_block
```

13.7.5 Example of Data Blocks in STL Source Files

Data Block:

```
DATA_BLOCK DB 10
TITLE = DB Example 10
STRUCT
                aa : BOOL;          // Variable aa of type BOOL
                bb : INT;           // Variable bb of type INT
                cc : WORD;
END_STRUCT;
BEGIN           // Assignment of actual values
                aa := TRUE;
                bb := 1500;
END_DATA_BLOCK
```

Data Block with Associated User-Defined Data Type:

```
DATA_BLOCK DB 20
TITLE = DB (UDT) Example
UDT 20                          // Specifies associated UDT
BEGIN
                start := TRUE;  // Assignment of actual values
                setp := 10;
END_DATA_BLOCK
```

Note
The UDT used must come before the data block in the source file.

Data Block with Associated Function Block:

```
DATA_BLOCK DB 30
TITLE = DB (FB) Example
FB 30                          // Specifies associated FB
BEGIN
                start := TRUE;  // Assignment of actual values
                setp := 10;
END_DATA_BLOCK
```

Note
The associated function block must come before the data block in the source file.

13.7.6 Example of User-Defined Data Types in STL Source Files

```
TYPE  UDT20
STRUCT
                start : BOOL;          // Variable of type BOOL
                setp. : INT;           // Variable of type INT
                value : WORD;          // Variable of type WORD
END_STRUCT;
END_TYPE
```

14 Displaying Reference Data

14.1 Overview of the Available Reference Data

You can create and evaluate reference data to make it easier to debug and modify your user program. You use the reference data for the following:

- As an overview of your whole user program
- As the basis for changes and tests
- To complement your program documentation

The following table shows which information you can extract from the individual views:

View	Purpose
Cross-reference list	Overview of the addresses in the memory areas I, Q, M, P, T, C, and DB, FB, FC, SFB, SFC calls used in the user program. Using the menu command **View > Cross References for Address,** you can display all the cross-references including overlapping access to the selected address.
Assignment list for inputs, outputs, and bit memory	Overview of which bits of the addresses in the memory areas I, Q, and M, and which timers and counters (T and C) are already occupied within the user program; forms an important basis for troubleshooting or changes in the user program
Program structure	Call hierarchy of the blocks within a user program and an overview of the blocks used and their nesting levels
Unused symbols	Overview of all symbols which are defined in the symbol table but not used in the parts of the user program for which reference data are available
Addresses without symbols	Overview of all absolute addresses which are used in the parts of the user program for which reference data are available but for which no symbol has been defined in the symbol table

The reference data for the selected user program include all the lists in the table. It is possible to create and display one or more of the lists for one user program or for more than one user program.

Displaying a Number of Views Simultaneously

Displaying other lists in additional windows allows you, for example, to:

- Compare the same lists for different S7 user programs.
- Display various views of a list, for example, a cross-reference list, displayed differently and placed side by side on the screen. You can, for example, display only the inputs of an S7 user program in one of the cross-reference lists and only the outputs in another list.
- Open a number of lists for an S7 user program simultaneously, for example, program structure and cross-reference list.

14.1.1 Cross-Reference List

The cross-reference list provides an overview of the use of addresses within the S7 user program.

When you display the cross-reference list you obtain a list of the addresses of memory areas input (I), output (Q), bit memory (M), timer (T), counter (C), function block (FB), function (FC), system function block (SFB), system function (SFC), I/O (P) and data block (DB), as used in the S7 user program along with their addresses (absolute address or symbol) and usage. It is displayed in an active window. The working window's title bar shows the name of the user program to which the cross-reference list belongs.

Every line in the window corresponds to a cross-reference list entry. The search function makes it easier for you to find specific addresses and symbols.

The cross-reference list is the default view when you display reference data. You can change this default.

Structure

A cross-reference list entry consists of the following columns:

Column	Content/Meaning
Address (symbol)	Address
Block (symbol)	Block in which the address is used
Type	Whether a read (R) and/or write (W) access to the address is involved
Language	Information on the programming language used to create the block
Location	Double-click the location field to jump to the location of use for the selected address.

The Block, Type, Language and Location columns are displayed only if the corresponding properties were selected for the cross-reference list. This block information varies, depending on the programming language the block was written in.

You can set the column width in the cross-reference list shown on the screen as required using the mouse.

Sorting

The cross-reference list default option is to sort by memory areas. If you click a column header with the mouse, you can sort the entries of this column by the default sort criteria.

Example of Cross-Reference List Layout

Address (symbol)	Block (symbol)	Type	Language	Location
I1.0 (Motor on)	OB2	R	STL	Nw 2 Inst 33 /0
M1.2 (MemoryBit)	FC2	R	LAD	Nw 33
C2 (Counter2)	FB2		FBD	Nw2

14.1.2 Program Structure

The program structure describes the call hierarchy of the blocks within an S7 user program. You are also given an overview of the blocks used, their dependencies, and their local data requirements.

Using the menu command **View > Filter** in the "Generating Reference Data" window you open a tabbed dialog box. In the "Program Structure" tab you can set how you want the program structure displayed.

You can choose between:

- Call structure and
- Dependency structure

Symbols for the Program Structure

Symbol	Meaning
	Block called normally (CALL FB10)
	Block called unconditionally (UC FB10)
	Block called conditionally (CC FB10)
	Data block
	Recursion
	Recursion and called conditionally
	Recursion and called unconditionally
	Block not called

- Recursions in the call are recognized and indicated graphically in the call structure.
- Recursions within the call hierarchy are indicated by different symbols.
- Regularly called blocks (CALL), conditionally called blocks (CC) or unconditionally called blocks (UC) are marked by different symbols.
- Blocks not called are displayed at the bottom of the call structure and marked with a black cross. There is no further breakdown of the call structure of a block which is not called.

Call Structure

The complete call hierarchy is displayed.

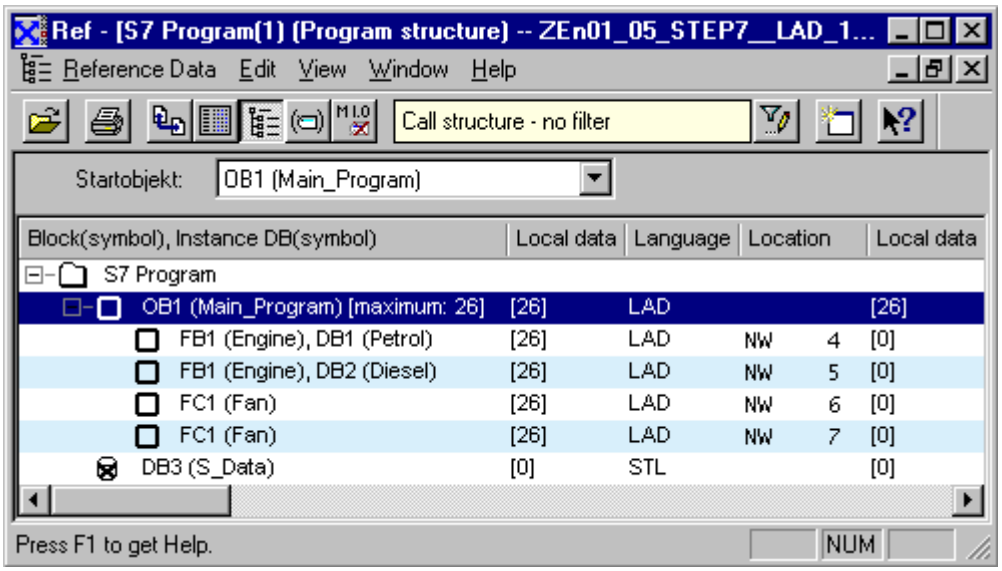

If the program structure is to be created for all organization blocks (OB) and OB1 is not in the S7 user program, or if a starting block was specified which is not present in the program, you are automatically prompted to specify another block for the program structure root.

Display of multiple calls of blocks can be deactivated by option settings, both for the call structure and for the dependency structure.

Displaying the Maximum Local Data Requirement in the Call Structure

To give you a quick overview of the local data requirement of the organization blocks in the user program displayed, the following can be displayed in the tree structure:

- The maximum local data requirement per OB and
- The local data requirement per path

You can activate and deactivate this display in the "Program Structure" tab.

If synchronous error OBs (OB121, OB122) are present, a plus sign and the additional requirement for the synchronous error OBs are displayed after the numerical value for the maximum local data requirement.

Dependency Structure

The dependency structure shows the dependency of each block in the project on other blocks. The block is displayed at the outer left and listed below in the indented segments are the blocks that call or use this block.

Displaying Deleted Blocks

Lines relating to deleted blocks are highlighted in red color.

14.1.3 Assignment List

The Assignment lists show you which addresses are already assigned in the user program. This display is an important basis for troubleshooting or making changes in the user program.

The I/Q/M assignment list display gives you an overview of which bit in which byte of the memory areas input (I), output (Q), bit memory (M), times (T) and counter (Z) is used. The I/Q/M assignment list is displayed in a working window.

The working window's title bar shows the name of the S7 user program to which the assignment list belongs.

I/Q/M Table

Each line contains one byte of the memory area in which the eight bits are coded according to their access. It also indicates whether the access is of a byte, word, or double word.

Identification in the I/Q/M Table

White background	The address is not accessed and thus not assigned.
X	The address is accessed directly.
Blue background	The address is accessed indirectly (byte, word, or double word access).

Columns in the I/Q/M Table

Column	Content/Meaning
7 6 5 4 3 2 1 0	Bit number of the corresponding byte
B	The byte is occupied by a one-byte access
W	The byte is occupied by a one-word access
D	The byte is occupied by a double-word access

Example

The following example shows the typical layout of an assignment list for inputs, outputs, and bit memory (I/Q/M).

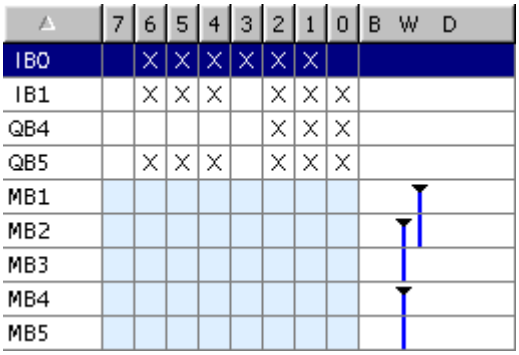

The first row shows the assignment of input byte IB 0. Inputs for address IB 0 are accessed directly (bit access). The columns "0", "1", "2", "3", "5", and "6" are identified with "X" for bit access.

There is also word access to memory bytes 1 and 2, 2 and 3 or 4 and 5. For this reason, a "bar" is shown in the "W" column, and the cells also have a light blue background. The black tip of the bar shows the start of word access.

T/C Table

Each row displays 10 timers or counters.

Example

	0	1	2	3	4	5	6	7	8	9
T 00-09	.	T1	.	.	.		T6	.	.	.
T 10-19	.	.	T12	.	.	.	.	T17	.	T19
T 20-29	.	.	.	.	T24	.	.	.	.	.
Z 00-09	.	.	Z2	.	.	.	.	Z7	.	.
Z 10-19	.	.	.	.	.	.	.	.	.	Z19
Z 20-29	.	.	.	.	.	.	.	.	.	.
Z 30-39	.	.	.	.	Z34	.	.	.	.	.

In this example, the timers T1, T6, T12, T17, T19, T24 and the counters Z2, Z7, Z19, Z34 are occupied.

The lists are sorted alphabetically. You can arrange the entries by clicking on the column title.

14.1.4 Unused Symbols

You are shown an overview of all the symbols with the following characteristics:

- The symbols defined in the symbol table.
- The symbols not used in the parts of the user program for which reference data exist.

They are displayed in an active window. The working window's title bar shows the name of the user program to which the list belongs.

Every line shown in the window corresponds to a list entry. A line consists of address, symbol, data type, and comment.

Column	Content/Meaning
Address	Absolute address
Data Type	Data type of the address
Comment	Comment on the address from the symbol table

Example of List of Unused Symbols Layout

Symbol	Address	Data Type	Comment
MCB1	I 103.6	BOOL	Motor circuit breaker 1
MCB2	I 120.5	BOOL	Motor circuit breaker 2
MCB3	I 121.3	BOOL	Motor circuit breaker 3

You can sort the entries by clicking the column title.

You can also remove symbols that are no longer needed from the list. To do this, select symbols in the list and then execute the "Delete symbols" function.

14.1.5 Addresses Without Symbols

When you display the list of addresses without symbols, you obtain a list of the elements which are used in the S7 user program, but which are not defined in the symbol table. They are displayed in an active window. The working window's title bar shows the name of the user program to which the list belongs.

A line consists of the address and the number of times that the address is used in the user program. The entries are sorted according to address.

Example:

Address	Number
Q 2.5	4
I 23.6	3
M 34.1	20

You can also assign names to addresses without symbols. To do this, select addresses in the list and then execute the "Edit symbols" function.

14.1.6 Displaying Block Information for LAD, FBD, and STL

Language relevant information for Ladder Logic, Function Block Diagram, and Statement List is displayed in the cross-reference list and the program structure. This information consists of the block language and details.

The "Program Structure" view only displays language relevant information if the filter is set to "Call Structure" in the "Program Structure" tab and if respective options were selected.

Language relevant information in the "Cross References" can be shown or hidden via menu command **View > Filter**.

- Activate the "Block language" and "Details" check box in the "Cross References" tab of the "Filter" dialog box to display the block language information.

Language relevant information varies according to the programming language the block was written in and is shown using abbreviations.

Language	Network	Statement	Instruction
STL	Nw	Inst	/
LAD	Nw		
FBD	Nw		

Nw and Inst specify in which network and in which statement the address is used (cross-reference list) or the block is called (program structure).

Displaying Block Information for the Optional Programming Languages

The online help topics on block information can be accessed if the corresponding optional package is installed.

14.2 Working with Reference Data

14.2.1 Ways of Displaying Reference Data

The following possibilities are available for displaying reference data:

Displaying from the SIMATIC Manager

1. In the project window in the component view offline, select the "Blocks" folder.
2. Select the menu command **Options > Reference Data > Display**.

Displaying from the Editor Window

1. Open a block in the "Blocks" folder.
2. In the window of the programming language editor, select the menu command **Options > Reference Data**.

The "Customize" dialog box is displayed. Here you can select the view that is shown first. The default view is the one in the application for displaying reference data that was closed last. You can suppress the dialog for future calls.

Displaying Directly from the Compiled Block

You can display the reference data for a compiled block directly from the language editor to get a current overview of your user program.

14.2.2 Displaying Lists in Additional Working Windows

Using the menu command **Window > New Window** you can open additional working windows and display other views of the reference data (for example, List of Unused Symbols).

You open a working window for previously hidden reference data using the menu command **Reference Data > Open**.

You can change to another view of the reference data by selecting one of the commands in the "View" menu or the corresponding button in the toolbar:

Reference Data View	**Menu Command to Display this Reference Data View**
Addresses Without Symbols	View > Addresses Without Symbols
Unused Symbols	View > Unused Symbols
Assignment	View > Assignment
Program Structure	View > Program Structure
Cross-Reference List	View > Cross References

14.2.3 Generating and Displaying Reference Data

Generating Reference Data:

1. In the SIMATIC Manager, select the block folder for which you want to generate reference data.
2. Select the menu command **Options > Reference Data > Generate** in the SIMATIC Manager.

Before generating reference data, the computer checks to see if any reference data are available and if so, whether the data are current.

- If reference data are available, they are generated.
- If the reference data available are not current, you can choose whether to update the reference data or whether to generate them again completely.

Displaying Reference Data:

Using the menu command **Options > Reference Data > Display** you can display the reference data.

Before displaying reference data, a check is made to ascertain whether any reference data exist and whether the existing reference data are current.

- If no reference data exist they are generated.
- If incomplete reference data exist, a dialog box is displayed showing a notice that the reference data are inconsistent. You can then decide whether you want to update the reference data and to what extent. You then have the following possibilities:

Choice	Meaning
For modified blocks only	The reference data are updated for any modified or new blocks; information on any blocks deleted is removed from the reference database.
For all blocks	The reference data are generated again from scratch for all blocks.
Do not update	The reference data are not updated.

In order to update the reference data, the blocks are recompiled. The appropriate compiler is called to compile each block. Using the menu command **View > Update** you can refresh the view of the reference data already displayed in the active window.

14.2.4 Finding Address Locations in the Program Quickly

You can use reference data to position the cursor at different locations of an address in the program when programming. To do this, you must have up-to-date reference data. However, you do not have to start the application for displaying reference data.

Basic Procedure

1. Select the menu command **Options > Reference Data > Generate** in the SIMATIC Manager to generate the current reference data. This step is only necessary if there are no reference data, or if you have old reference data.
2. Select the address in an open block.
3. Select the menu command **Edit > Go To > Instance**.
   A dialog box is now displayed containing a list with all instances of the address in the program.
4. Select the option "Overlapping access to memory areas" if you also want to display the instances of addresses whose physical addresses or address area overlap with that of the called address. The "Address" column is added to the table.
5. Select a location in the list and click the "Go To" button.

If the reference data are not up-to-date when you open the dialog box, a message to this effect will appear. You can then update the reference data.

List of Locations

The list of locations in the dialog box contains the following details:

- The block in which the address is used
- The symbolic name of the block, if one exists
- Details, for example, information on the location and, if appropriate, the instruction, which depends on the original programming language of the block or source file (SCL)
- Language-dependent information
- Type of access to the address: read-only (R), write-only (W), read and write (RW), unknown (?).
- Block language

You can filter the display of locations and in this way view, for example, write access only for an address. The online help for this dialog box provides you with more detailed information on what to enter in the fields and the other information displayed.

Note

Reference data only exist offline. This function therefore always works with the cross references of the offline blocks, even if you call the function in an online block.

14.2.5 Example of Working with Address Locations

You want to determine at which locations output Q1.0 (direct/indirect) is set. The following STL code in OB1 is used as an example:

```
Network 1: ..........
A Q 1.0  // irrelevant
= Q 1.1  // in this example

Network 2:
A M1.0
A M2.0
= Q 1.0  // assignment

Network 3:
//comment line only
SET
= M1.0  // assignment

Network 4:
A I 1.0
A I 2.0
= M2.0  // assignment
```

This results in the following assignment tree for Q1.0:

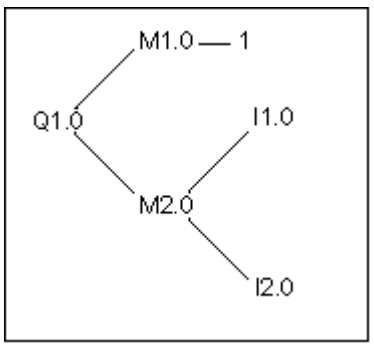

Then proceed as follows:

1. Position the cursor on Q1.0 (NW 1, Inst 1) in OB1 in the LAD/STL/FBD Editor.
2. Select the menu command **Edit > Go To > Location** or use the right mouse button to select "Go to Location."
   The dialog box now displays all the assignments for Q1.0:
   OB1 Cycle Execution NW 2 Inst 3 /= W STL
   OB1 Cycle Execution NW 1 Inst 1 /A R STL
3. Jump to "NW 2 Inst 3" in the Editor using the "Go To" button in the dialog box:
   Network 2:
   A M1.0
   A M2.0
   = Q 1.0
4. The assignments to both M1.0 and M2.0 must now be checked. First position the cursor on M1.0 in the LAD/STL/FBD Editor.
5. Select the menu command **Edit > Go To > Location** or use the right mouse button to select "Go to Location." The dialog box now displays all the assignments for M1.0:
   OB1 Cycle Execution NW 3 Inst 2 /= W STL
   OB1 Cycle Execution NW 2 Inst 1 /A R STL
6. Jump to "NW 3 Inst 2" in the Editor using the "Go To" button in the dialog box.
7. In the LAD/STL/FBD Editor in Network 3, you will see the assignment to M1.0 is not important (because it is always TRUE) and that the assignment to M2.0 needs to be examined instead.

   In STEP 7 versions earlier than V5, you would now have to run through the entire sequence of assignments all over again. The buttons ">>" and "<<" make this much simpler:
8. Place the open dialog box "Go to Location" on top, or call the function "Go to Location" in the LAD/STL/FBD Editor from your current position.
9. Click the "<<" button once or twice until all the locations of Q1.0 are displayed; the last jump location "NW 2 Inst 3" is selected.
10. Jump from the address locations dialog box to "NW 2 Inst 3" in the Editor using the "Go To" button (as in point 3):
    Network 2:
    A M1.0
    A M2.0
    = Q 1.0
11. In point 4, the assignment to M1.0 was checked. Now you have to check all the (direct/indirect) assignments to M2.0. Position the cursor on M2.0 in the Editor and call the function "Go to Location:" All the assignments to M2.0 are displayed:
    OB1 Cycle Execution NW 4 Inst 3 /= W STL
    OB1 Cycle Execution NW 2 Inst 2 /A R STL
12. Jump to "NW 4 Inst 3" in the LAD/STL/FBD Editor using the "Go To" button:
    Network 4:
    A I 1.0
    A I 2.0
    = M2.0
13. Now you have to check the assignments to I1.0 and I2.0. This process is not described in this example, because you proceed in the same way as before (point 4 onwards).

By switching between the LAD/STL/FBD Editor and the address locations dialog box, you can find and check the relevant locations in your program.

15 Checking Block Consistency and Time Stamps as a Block Property

15.1 Checking Block Consistency

Introduction

If the interfaces or the code of individual objects have to be adapted or extended, this can lead to time stamp conflicts. Time stamp conflicts can in turn cause block inconsistencies between calling objects and called objects or reference blocks and thus to a high amount correction work.

The "Check block consistency" function eliminates a lot of this correction work. The "Check block consistency" function removes a large part of all the time stamp conflicts and block inconsistencies. In the case of objects whose block inconsistencies could not be eliminated automatically, the function places you at the position to be changed in the corresponding editor, where you can carry out the required changes. All the block inconsistencies are eliminated and the objects are compiled step-by-step.

Requirements

It is only possible to check block consistency for projects created from STEP 7 V5.0, Service Pack 3. For older projects, you must first compile everything when starting the block consistency check (menu command **Program > Compile All**).

For objects created with an options package, the options package must be installed for the consistency check.

Starting the Block Consistency Check

At the start of the block consistency check, the time stamps of the block interfaces are checked, and objects that could cause block inconsistencies are highlighted in the tree view (Dependency Tree: References / Call Tree).

1. In the SIMATIC Manager, go to the project window, select the required block folder and then initiate the block consistency via menu command **Edit > Check Block Consistency**.
2. In "Check Block Consistency" select the menu command **Program > Compile**
   STEP 7 automatically recognizes the programming language for the relevant objects and calls the corresponding editor. As far as possible, the time stamp conflicts and block inconsistencies are corrected automatically and the objects are compiled. If the time stamp conflict or the inconsistency in an object cannot be eliminated automatically, an error message appears in the output window (refer to Step 3 for further procedures). This process is repeated automatically for all the objects in the tree view.
3. If it was not possible to eliminate all the block inconsistencies automatically during the compilation run, the corresponding objects are marked in the output windows as error messages. Position the mouse on the corresponding error entry and use the right-hand mouse to call the error display in the pop-up menu. The relevant error is opened and the program jumps to the positions to be changed. Eliminate all the block inconsistencies, and save and close the object. Repeat this process for all the objects marked as errors.

4. Start Steps 2 and 3 again. Repeat this process until no more errors are displayed in the message window.

15.2 Time Stamps as a Block Property and Time Stamp Conflicts

Blocks contain a code time stamp and an interface time stamp. These time stamps are displayed in the dialog box for the block properties. You can monitor the consistency of STEP 7 programs using time stamps.

STEP 7 displays a time stamp conflict if it detects a violation of the rules when comparing time stamps. The following violations may occur:

- A called block is more up-to-date than the calling block (CALL)
- A referenced block is more up-to-date than the block which is using it
- Examples of the second type of violation:
- A UDT is more up-to-date than the block that is using it; that is, a DB or another UDT, or an FC, an FB, or an OB that is using the UDT in the variable declaration table.
- An FB is more up-to-date than its corresponding instance DB.
- An FB2 is defined as a multiple instance in FB1 and FB2 is more up-to-date than FB1.

Note

Even if the relationship between the interface time stamps is correct, inconsistencies may occur:

- The definition of the interface for the referenced block does not match the definition in the location at which it is used.

These inconsistencies are known as interface conflicts. They can occur, for example, when blocks are copied from different programs or when an ASCII source file is compiled and not all of the blocks in a program are generated.

15.3 Time Stamps in Logic Blocks

Code Time stamp

The time and date the block was created is entered here. The time stamp is updated:

- When the program code is changed
- When the interface description is changed
- When the comment is changed
- When an ASCII source file is created for the first time and compiled
- When the block properties ("Properties" dialog box) are changed

Interface Time stamp

The time stamp is updated:

- When the interface description is changed (changes to data types or initial values, new parameters)
- When an ASCII source file is created for the first time and compiled, if the interface is changed structurally.
- The time stamp is not updated:
- When symbols are changed
- When comments in the variable declaration are changed
- When changes are made in the TEMP area

Rules for Block Calls

- The interface time stamp of the called block must be older than the code time stamp of the calling block.
- Only change the interface of a block if no block is open which calls this block. Otherwise, if you save the calling blocks later than the changed block, you will not recognize this inconsistency from the time stamp.

Procedure if a Time stamp Conflict Occurs

A time stamp conflict is displayed when the calling block is opened. After making changes to an FC or FB interface, all calls to this block in calling blocks are shown in expanded form.

If the interface of a block is changed, all blocks which call this block must be adjusted as well.

After making changes to an FB interface, the existing multiple instance definitions and instance data blocks must be updated.

15.4 Time Stamps in Shared Data Blocks

Code Time stamp

The time stamp is updated:

- When an ASCII source file is created for the first time
- When an ASCII source file is compiled
- When changes are made in the declaration view or in the data view of the block

Interface Time stamp

The time stamp is updated:

- When the interface description is changed in the declaration view (changes to data types or initial values, new parameters)

15.5 Time Stamps in Instance Data Blocks

An instance data block saves the formal parameters and static data for function blocks.

Code Time stamp

The time and date the instance data blocks were created is entered here. The time stamp is updated when you enter actual values in the data view of the instance data block. The user cannot make changes to the structure of an instance data block because the structure is derived from the associated function block (FB) or system function block (SFB).

Interface Time stamp

When an instance data block is created, the interface time stamp of the associated FB or SFB is entered.

Rules for Opening Without Conflicts

The interface time stamps of the FB/SFB and the associated instance data block must match.

Procedure if a Time stamp Conflict Occurs

If you change the interface of an FB, the interface time stamp of the FB is updated. When you open an associated instance data block, a time stamp conflict is reported because the time stamps of the instance data block and the FB no longer match. In the declaration section of the data block the interface is displayed with the symbols generated by the compiler (pseudo-symbols). The instance data block can now only be viewed.

To remedy time stamp conflicts of this type, you must create the instance data block for a changed FB again.

15.6 Time Stamps in UDTs and Data Blocks Derived from UDTs

User-defined data types (UDTs) can, for example, be used to create a number of data blocks with the same structure.

Code Time stamp

The code time stamp is updated on every change.

Interface Time stamp

The interface time stamp is updated when the interface description is changed (changes to data types or initial values, new parameters).

The interface time stamp of a UDT is also updated when the ASCII source file is compiled.

Rules for Opening Without Conflicts

- The interface time stamp of the user-defined data type must be older than the interface time stamp in logic blocks in which this data type is used.
- The interface time stamp of the user-defined data type must be identical to the time stamp of a data block derived from a UDT.
- The interface time stamp of the user-defined data type must be younger than the time stamp of a secondary UDT.

Procedure if a Time stamp Conflict Occurs

If you change a UDT definition that is used in a data block, function, function block, or another UDT definition, STEP 7 reports a time stamp conflict when the block is opened.

The UDT component is shown as a fanned-out structure. All variable names are overwritten by values preset by the system.

15.7 Correcting the Interfaces in a Function, Function Block, or UDT

If you need to correct the interface in an FB, FC, or UDT, proceed as follows to avoid time stamp conflicts:

1. Generate an STL source file from the block you want to change and all directly or indirectly referenced blocks.
2. Save the changes in the source file you generated.
3. Compile the modified source file back into blocks.

You can now save/download the interface changes.

15.8 Avoiding Errors when Calling Blocks

STEP 7 Overwrites Data in the DB Register

STEP 7 modifies the registers of the S7-300/S7-400 CPU when various instructions are executed. The contents of the DB and DI registers are, for example, swapped when you call an FB. This allows the instance DB of the called FB to be opened without losing the address of the previous instance DB.

If you work with absolute addressing, errors can occur accessing data saved in the registers. In some cases, the addresses in the register AR1 (address register 1) and in the DB register are overwritten. This means that you could read or write to the wrong addresses.

Danger

Danger of damage to property and persons when:

1. Using CALL FC, CALL FB, CALL multiple instance
2. Accessing a DB using the complete absolute address (for example DB20.DBW10)
3. Accessing variables of a complex data type

It is possible that the contents of DB registers (DB and DI), address registers (AR1, AR2), and accumulators (ACCU1, ACCU2) may be changed.

In addition, you cannot use the RLO bit of the status word as an additional (implicit) parameter when you call an FB or FC.

When using the programming techniques mentioned above, you must make sure that you save and restore the contents yourself; otherwise errors may occur.

Saving Correct Data

The contents of the DB register can cause critical situations if you access the absolute addresses of data using the abbreviated format. If, for example, you assume that DB20 is open (and that its number is saved in the DB register), you can specify DBX0.2 to access the data in bit 2 of byte 0 of the DB whose address is entered in the DB register (in other words DB20). If, however, the DB register contains a different DB number you access the wrong data.

You can avoid errors when accessing data of the DB register by using the following methods to address data:

- Use the symbolic address
- Use the complete absolute address (for example *DB20.DBX0.2*)

If you use these addressing methods, STEP 7 automatically opens the correct DB. If you use the AR1 register for indirect addressing, you must always load the correct address in AR1.

Situations in which Registers are Modified

The manipulation of the address registers for indirect addressing is relevant only in STL. The other languages do not support indirect access to the address registers.

The adaptation of the DB register by the compiler must be taken into account in all programming languages to ensure correct parameter transfer when blocks are called.

The contents of the address register AR1 and the DB register of the calling block are overwritten in the following situations:

Situation	Description
With actual parameters from a DB	• Once you have assigned an actual parameter to a block from a DB (for example DB20.DBX0.2) STEP 7 opens the DB (DB20) and adapts the content of the DB register. The program then works with the adapted DB after the block call.
When calling blocks in conjunction with higher data types	• After a block has been called from within an FC that transfers a component of a formal parameter of a higher data type (string, array, structure or UDT) to the called block, the content of AR1 and the DB register of the calling block are modified. • The same applies to a call from within an FB if the parameter is in the VAR_IN_OUT area of the caller.
When accessing components of a higher data type	• When an FB accesses a component of a formal parameter of a higher data type in the VAR_IN_OUT area (string, array, structure or UDT), STEP 7 uses the address register AR1 and the DB register. This means that the contents of both registers are modified. • When an FC accesses a component of a formal parameter of a higher data type in the VAR_IN_OUT area (string, array, structure or UDT), STEP 7 uses the address register AR1 and the DB register. This means that the contents of both registers are modified.

Note

- When an FB is called from within a version 1 block, the actual parameter for the first Boolean IN or IN_OUT parameter is not transferred correctly if the command before the call does not limit the RLO. In this case, it is logically combined with the existing RLO.
- When an FB is called (single or multiple instance), the address register AR2 is written to.
- If the address register AR2 is modified in an FB, such by the operations UC, CC or CALL (Call FC/SFC without parameters), there is no guarantee that the FB will be executed correctly.
- If the complete absolute DB address is not transferred to an ANY parameter, the ANY pointer does not get the DB number of the open DB. Instead, it always gets the number 0.

16 Configuring Messages

16.1 The Message Concept

Messages allow you to detect, localize, and remedy errors during processing on the programmable controllers quickly, thus reducing downtimes on a plant considerably.

Before messages can be output, they must first be configured.

With STEP 7, you can create and edit messages linked to events with assigned message texts and message attributes. You can also compile the messages and display them on display devices.

16.1.1 What Are the Different Messaging Methods?

There are different methods of creating messages.

Bit Messaging

Bit messaging requires the programmer to perform three steps:

- Create the user program on the programming device and set the required bit.
- Create an assignment list using any text editor in which a message text is assigned to the message bit (for example, M 3.1 = limit switch pressure).
- Create the list of message texts on the operator panel on the basis of the assignment list.

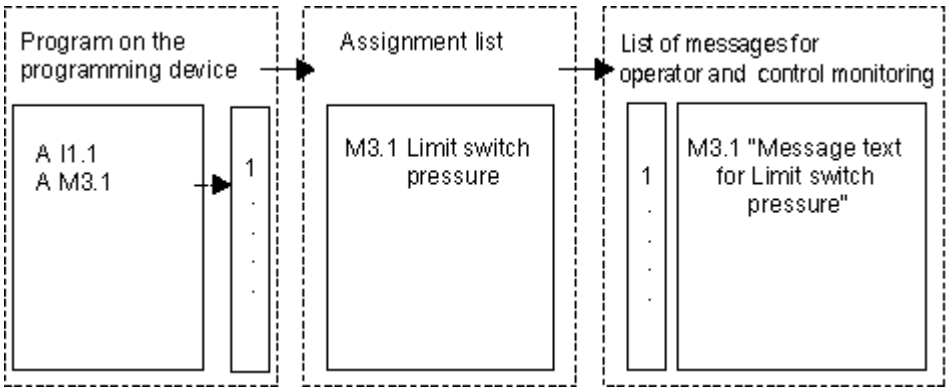

The operator interface system queries the programmable controller cyclically to see whether the message bit has changed or not. If the programmable controller signals a change, the corresponding message is displayed. The message receives the time stamp from the operator interface system.

Message Numbering

Message numbering requires the programmer to perform only one step:

- Create the user program on the programming device, set the required bit, and assign the required message text to the bit directly while programming.

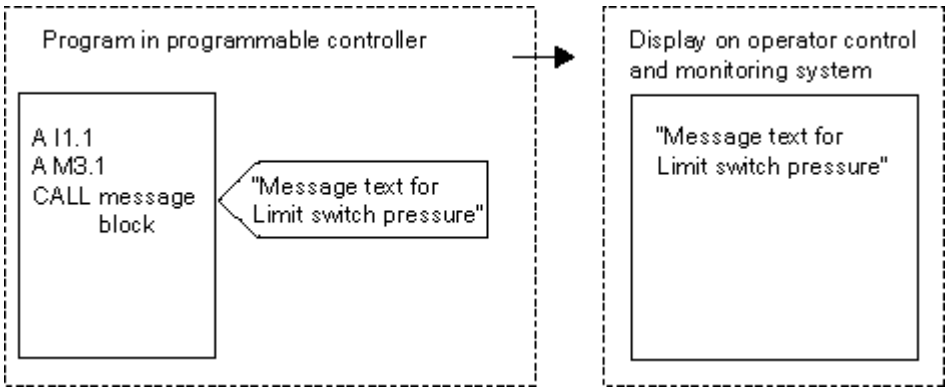

There is no cyclic query of the programmable controller. When the programmable controller signals a change, the corresponding message number is passed to the operator interface system and the corresponding message text is displayed. The message receives the time stamp from the programmable controller and can therefore be traced more exactly than with bit messaging.

16.1.2 Choosing a Messaging Method

Overview

The following table shows the properties and requirements for the different messaging methods:

Message Numbering	Bit Messaging
• Messages are managed in a common database for programming device and operator panel • The load on the bus is low (programmable controller signals active) • Messages receive the timestamp from the programmable controller	• There is no common database for the programming device and operator panel • The load on the bus is high (operator panel polls) • Messages receive the timestamp from the operator panel

The message numbering method recognizes the following three types of messages:

Block-Related Messages	Symbol-Related Messages	User-Defined Diagnostic Messages
• Synchronized with the program • Displayed by ProTool (only ALARM_S) and WinCC • Possible with S7-300/400 • Programming using message blocks: - ALARM (S7-400 only) - ALARM_8 (S7-400 only) - ALARM_8P (S7-400 only) - NOTIFY (S7-400 only) - NOTIFY_8P (S7-400 only) - ALARM_S(Q) - AR_SEND (S7-400 only) - ALARM_D(Q) • Transfer to the operator control system - for WinCC via AS-OS engineering - For ProTool using ProTool functions	• Not synchronized with the program • Display by WinCC • Only possible with S7-400 • Configuration using the symbol table • Transfer to the AS using system data blocks (SDBs) • Transfer to operator control system using AS-OS engineering	• Synchronized with the program • Display in the diagnostic buffer on the PG • Possible with S7-300/400 • Programming using message block (system function) - WR_USMSG • No transfer to operator control system

STEP 7 only supports the more user-friendly message numbering method which will be described in detail below. Bit messaging is configured in the HMI devices and is described there.

Examples of Message Numbering

Messaging Method	Application
Block-related messages	Used to report program-synchronous events, for example, to show that a controller has reached a limit value
Symbol-related messages	Used to report events that are independent of the program, for example, a switch setting being monitored
User-defined messages	Used to report diagnostic events in the diagnostic buffer, with each call of the SFC

16.1.3 SIMATIC Components

Overview

The following figure shows an overview of which SIMATIC components are involved in configuring and displaying messages.

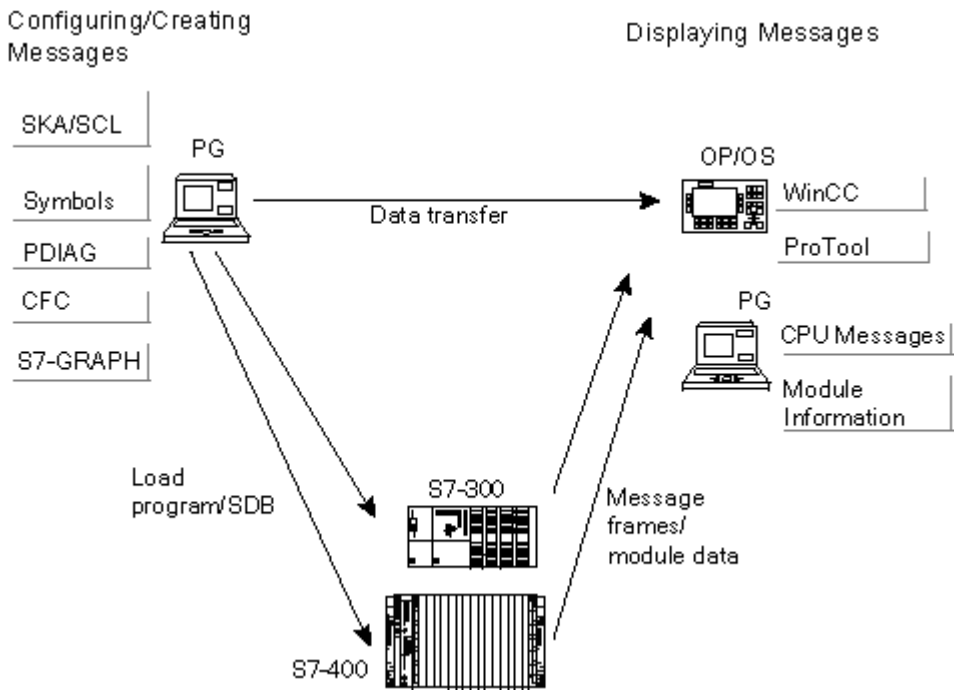

16.1.4 Parts of a Message

How a message is displayed depends on the messaging method, the message block used, and the display device.

The possible parts of a message are listed in the following table:

Part	Description
Timestamp	Generated in the programmable controller when the message event occurs
Message state	The following states are possible: incoming, outgoing, outgoing without acknowledgement, outgoing with acknowledgement
Associated value	Some messages can be assigned a process value that can be evaluated by the message block used
Image	If the system crashes the messages that occurred can be displayed subsequently on the operator station
Message number	A unique number throughout the project or CPU (project-oriented or CPU-oriented). The number is assign by the system and identifies a message
Message texts	Configured by the user

Example

The following example shows an alarm message on an operator panel.

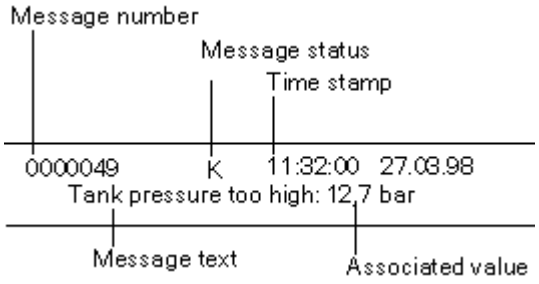

16.1.5 Which Message Blocks Are Available?

You can choose between the following message blocks, each of which contains a programmed message function:

- SFB 33: "ALARM"
- SFB 34: "ALARM_8"
- SFB 35 "ALARM_8P"
- SFB 36 "NOTIFY"
- SFC 18: "ALARM_S" and SFC 17: "ALARM_SQ"
- SFB 37: "AR_SEND" (for sending archives; no configuration of message texts and message attributes possible)
- SFB 31: "NOTIFY_8P"
- SFC 107: "ALARM_DQ"
- SFC 108: "ALARM_D"

Details are found in the reference online help on blocks.

When to Use Which Message Block

The following table helps you decide which message block to choose for your particular task. Selecting a message block depends on:

- The number of channels available in the block and therefore the number of signals that are monitored with each block call
- Whether messages are to be acknowledged
- The option of also specifying associated values
- The display devices to be used
- The project data for the CPU to be used.

Message Block	Chan-nels	Acknow-ledge-ment	Asso-ciated Values	WinCC Display	ProTool Display	CPU Messages /S7 Status Display	PLC	Remarks
ALARM SFB33	1	Possible	Up to 10	Yes	No	No	S7-400	Sends a message for each incoming or outgoing edge
ALARM_8 SFB34	8	Possible	No	Yes	No	No	S7-400	Sends a message for each incoming or outgoing edge of one or more signals
ALARM_8P SFB35	8	Possible	Up to 10	Yes	No	No	S7-400	As ALARM_8
NOTIFY SFB36	1	No	Up to 10	Yes	No	No	S7-400	As ALARM

Message Block	Chan-nels	Acknow-ledge-ment	Asso-ciated Values	WinCC Display	ProTool Display	CPU Messages /S7 Status Display	PLC	Remarks
NOTIFY_8P SFB 31	8	No	up to 10	Yes	No	No	S7-400	As NOTIFY
AR_SEND SFB37	1			Yes	No	No	S7-400	Used to send an archive; no configuration of message texts and message attributes possible
ALARM_SQ SFC17	1	Possible	1	Yes	Yes*	Yes	S7-300/ S7-400	Each time there is an SFC call and a signal change compared with the last SFC call, a message is generated
ALARM_S SFC18	1	No	1	Yes	Yes*	Yes	S7-300/ S7-400	As ALARM_SQ
ALARM_DQ SFC 107	1	Possible	1	Yes	Yes	Yes	S7-300/400	As ALARM_SQ
ALARM_D SFC 108	1	No	1	Yes	Yes	Yes	S7-300/400	As ALARM_SQ
* depending on the OP type								

16.1.6 Formal Parameters, System Attributes, and Message Blocks

Formal Parameters as Message Number Inputs

For each message or group of messages you need a formal parameter in your program that you specify as the IN parameter in the variable overview of your program. This formal parameter is then used as a message number input and forms the basis of a message.

How to Provide Formal Parameters with System Attributes

As a prerequisite for starting message configuration, you must first provide the formal parameters with system attributes as follows:

1. Add the following system attributes for parameters: "S7_server" and "S7_a_type"
2. Assign values to the system attributes corresponding to the message blocks that you called in your program code. The value for "S7_server" is always "alarm_archiv", the value for "S7_a_type" corresponds to the called message block.

System Attributes and Corresponding Message Blocks

The message blocks themselves are not displayed as objects in the message server; instead, the display contains the corresponding values of the system attribute "S7_a_type". These values have the same names as the message blocks that exist as SFBs or SFCs (exception: "alarm_s").

S7_a_type	Message Block	Description	Properties
alarm_8	ALARM_8	SFB34	8 channels, can be acknowledged, no associated values
alarm_8p	ALARM_8P	SFB35	8 channels, can be acknowledged, up to 10 associated values per channel
notify	NOTIFY	SFB36	1 channel, cannot be acknowledged, up to 10 associated values
alarm	ALARM	SFB33	1 channel, can be acknowledged, up to 10 associated values
alarm_s	ALARM_S	SFC18	1 channel, cannot be acknowledged, up to 1 associated value
alarm_s	ALARM_SQ	SFC17	1 channel, can be acknowledged, up to 1 associated value
ar_send	AR_SEND	SFB37	Used to send an archive
notify_8p	NOTIFY_8P	SFB 31	8 channels, cannot be acknowledged, up to 10 associated values
alarm_s	ALARM_DQ	SFC 107	1 channel, cannot be acknowledged, up to 1 associated value
alarm_s	ALARM_D	SFC 108	1 channel, cannot be acknowledged, up to 1 associated value

You will find more detailed information in the reference online help on system attributes.

The system attributes are assigned automatically if the message blocks that you use in your program are SFBs or FBs with corresponding system attributes and are called as multiple instances.

16.1.7 Message Type and Messages

Message configuration allows you to use different procedures to create a message type or a message. This depends on the message-type block via which you gain access to message configuration.

The message-type block can be either a function block (FB) or an instance data block.

- With an FB you can create a message type to use as a type for creating messages. All entries you make for the message type are entered in the messages automatically. If you assign an instance data block to the function block, messages for the instance data block are generated automatically in accordance with the message type and assigned message numbers.
- For an instance data block, you can modify messages generated based on this message type for a specific instance.

The visible difference here is that message numbers are assigned for messages but not for message types.

Locking Data for a Message Type

Message configuration allows you to enter texts and attributes for event-dependent messages. You can also specify, for example, how you want to display the messages on specific display devices. To make it easier to generate messages, you can work with message types.

- When you enter data (attributes and texts) for the message type, you can specify whether they are to be locked or not. With locked attributes a key symbol is added next to the input box or a checkmark is placed in the "Locked" column. Locked texts show a checkmark in the "Locked" column.
- With the message type "locked data" you cannot make changes in the instance-specific messages. The data are only displayed.
- If you do need to make changes, you must go back to the message type, remove the lock, and make the changes there. The changes do not apply for instances that were generated before the change.

Modifying Data Of Message Types

Whether or not the modification of data at message types has an influence on the instances depends on whether you have assigned message numbers globally to the project (project-oriented message numbers) or to the CPU (CPU-oriented message numbers) when you generated your project.

- Assigning project-oriented message numbers: When you subsequently modify message type data you also want to apply to the instances, you must also modify data at the instances accordingly.
- Assigning CPU-oriented message numbers: Subsequent modifications of message type data are automatically applied at the instances.
  Exceptions: You have previously modified data at the instance or have subsequently locked or unlocked message type data. If you copy an FB and an instance DB from a project with project-oriented message numbers to a project with CPU-oriented message numbers, you will then have to change the data at the instance in the same way you did it at the message type.

Caution:

When you copy the instances to another program and do not include the message type, the instance might only be partially displayed. To remedy, copy the message type to the new program.

If texts and attributes for an instance are displayed in green, this means the following: these texts and attributes are still as they were configured in the message type. They have not been changed at the instance.

16.1.8 How to Generate an STL Source File from Message-Type Blocks

When you generate an STL source file from message-type blocks, the configuration information is also written to the source file.

This information is written to a pseudo-comment that begins with "*$ALARM_SERVER" and ends with "*".

Caution

When you set a symbolic reference for a block, note that the symbol table may not be modified prior to the compilation of the source file.

When the source file contains multiple blocks, several pseudo-comment blocks will be joined to form a single comment block. Individual blocks with message attributes must not be deleted from the STL source file.

16.1.9 Assigning Message Numbers

You can specify if you want to assign message numbers for the project (project-oriented message numbers) or for the CPU (CPU-oriented message numbers). Assigning message numbers for the CPU has the advantage of allowing you to copy a program without having the message numbers change, in which case they would have to be recompiled. It is only possible to display message numbers for the CPU on an HMI device with the applications "WinCC V6.0" and/or "ProTool V6.0". If you are working with an earlier version of these applications, you have to select message numbers for the project.

16.1.10 Differences Between Project-Oriented and CPU-Oriented Assignment of Message Numbers

The table below lists the differences between project-oriented and CPU-oriented assignment of message numbers:

Project oriented	CPU oriented
Some of the message attributes and texts depend on the used HMI unit and must be configured display specific.	The assigned attributes and texts do not depend on the HMI unit used, that is, there is no need to enter further display devices or specify a display specific message for this device.
Programs must be recompiled after they have been copied.	Programs can be copied to other locations of a project and to other projects (cross-project copying). However, the program must be recompiled if only single blocks have been copied.
When you subsequently change message type data (texts and attributes), you must also modify the instances.	If you subsequently change message type data (texts and attributes), all changes are applied automatically to the instances (Exception: you have previously changed the data of the instance).
Texts can only be written on one line.	Texts can be written on several lines.
For all message types (except WR_USMSG) up to 2097151 messages per program can be created.	Up to 8191 alarm_s messages can be created per program. For all other message types (except WR_USMSG) up to 32767 messages per program can be created. When you "Save As with Reorganization" of projects or copy programs from the project-wide to the CPU-wide message number concept, you should therefore make sure that the maximum number of possible messages per program is not exceeded in the CPU-wide message number concept!

16.1.11 Options for Modifying the Message Number Assignment of a Project

In the "Message number" tab of the SIMATIC manager you can preset the way message numbers will be assigned (Menu command **Options > Customize**) to future projects and libraries. In this tab you determine whether the message numbers are to be assigned only to the CPU (CPU-oriented) or only to the project (project-oriented). You can also choose "Always ask for setting" if you want to specify the assignment later.

If the initially set default "CPU-oriented" or "project-oriented" was active when you created the project or library, you can no longer change the type of message number assignment for this project or library.

If you have set "project-oriented" unique message number assignment and want to set "CPU-oriented" unique assignment proceed as follows:

1. In SIMATIC Manager, select the corresponding project or library.
2. Select menu command **File > Save As**.
3. Enable the "With rearrangement" check box In the next dialog box and enter a new name.
4. Start the process with "Save As" and confirm your entries with "OK".
5. In one of the next dialogs you can specify "CPU-oriented" unique message number assignments.

You can use the **File > Delete** command to delete the original project or library.

16.2 Project-Oriented Message Configuration

16.2.1 How to Assign Project-Oriented Message Numbers

Messages are identified by a number which is unique throughout a project. To achieve this, the individual STEP 7 programs are each allocated a number range within the total available range (1 to 2097151). If you copy a program and a conflict results - that is, if the same message numbers have already been assigned in the target range - the new program must be allocated a new number range. If such a situation arises, STEP 7 automatically opens the dialog box in which you can specify the new number range.

If no messages have been configured, you can also set or change the number range for an S7 program using the menu command **Edit > Special Object Properties > Message Numbers**.

By default, the message number range is assigned in steps of 20,000.

16.2.2 Assigning and Editing Block-Related Messages

Block-related messages are assigned to a block (instance DB). To create a block-related message, you can use system function blocks (SFBs) and system functions (SFCs) as message blocks.

16.2.2.1 How to Create Block-Related Messages (Project-Oriented)

Basic Procedure

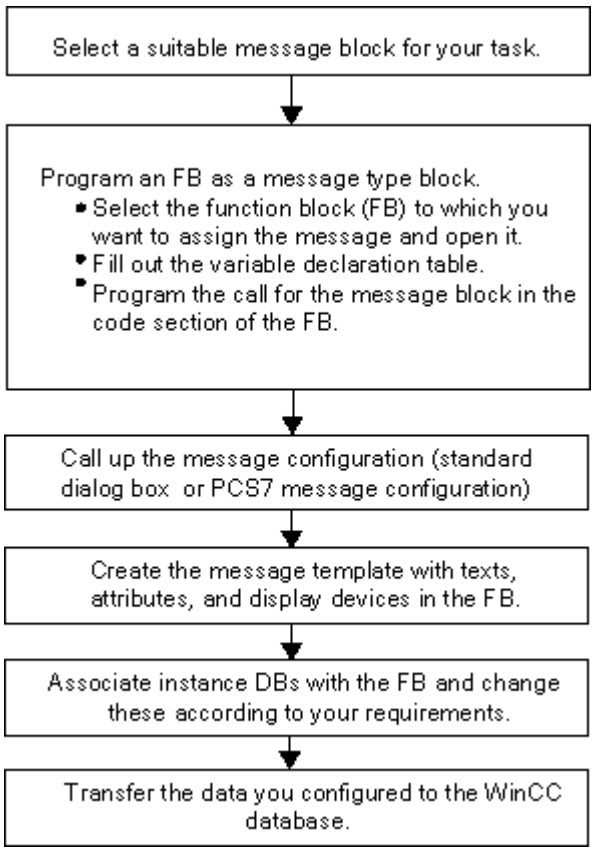

Programming Message-Type Blocks (FB)

1. In the SIMATIC Manager select the function block (FB) for which you want to generate a block-related message and open this block with a double-click.

   Result: The selected block is opened and displayed in the "LAD/STL/FBD" window.

2. Fill out the variable declaration table. For every message block that is called in the function block you must declare variables in the calling function block.

   Enter the following variables in the variable overview column:

   - For the parameter "IN" enter a symbolic name for the message block input, for example, "Meld01" (for message input 01) and the data type (must be "DWORD" without an initial value).
   - For the parameter "STAT" enter a symbolic name for the message block to be called, for example, "alarm" and the corresponding data type, in this case "SFB33."

3. In the code section of the function block, insert the call for the selected message block, here "CALL alarm", and finish your entry with RETURN.
   Result: The input variables for the called message block (here SFB33) are displayed in the code section of the function block.

4. Assign the symbolic name you assigned in step 2 for the message block input, here "Mess01," to the variable "EV_ID". The system attributes are now applied for the message of type "alarm".

   Result: A flag should appear in the "Name" column for the parameter "IN" if the column is not selected. The selected block is then set as a message-type block. The required system attributes (for example, S7_server and S7_a_type) and the corresponding values are assigned automatically (Note: for certain SFCs you will have to assign the system attributes for the parameter "IN" yourself. To do this select the menu command **Edit > Object Properties** and then select the "Attributes" tab.).

   Caution: If you do not call an SFB, but rather an FB that contains multiple instances and configured messages, you must also configure the messages of this FB, with multiple instances, in the calling block.

5. Repeat steps 2 to 4 for all calls to message blocks in this function block.
6. Save the block using the menu command **File > Save**.
7. Close the "LAD/STL/FBD" window.

Opening the Message Configuration Dialog Box

- Select the desired message block and then select the menu command **Edit > Special Object Properties > Message** in the SIMATIC Manager.

  Result: The STEP 7 message configuration dialog box (standard dialog box) is opened. Information on opening the PCS7 Message Configuration function can be found under PCS 7 Message Configuration.

Editing a Message Type

1. Select the desired message block, open the message configuration, and enter the required message text in the "Text" and "Attributes" tabs or select the required message attributes.
   If you selected a multi-channel message block (for example, "ALARM_8"), you can assign specific texts and, to certain extent, specific attributes to each subnumber.
2. Assign the required display devices to the message type by clicking the "New Device" button and selecting the required display devices in the "Add Display Device" dialog box.

In the following tabbed pages, enter the required texts and attributes for the display devices. Exit the dialog box with "OK".

Note

When editing the display device specific texts and attributes, please read the documentation supplied with your display device.

Creating Instance Data Blocks

1. When you have created a message type, you can associate instance data blocks to it and edit the instance-specific messages for these data blocks.
   To do this, in the SIMATIC Manager open the block that is to call your previously configured function block, for example, "OB1", by double-clicking it. In the open code section of the OB, enter the call ("CALL"), the name and number of the FB to be called and of the instance DB that you want to associate with the FB as an instance. Confirm your entry with RETURN.

   Example: Enter "CALL FB1, DB1". If DB1 does not yet exist, confirm the prompt asking whether you want the instance DB created with "Yes."

   Result: The instance DB is created. In the code section of the OB, the input variables of the associated FBs, here for example "Mess01," and the message number allocated by the system, here "1," are displayed.
2. Save the OB with the menu command **File > Save** and close the "LAD/STL/FBD" window.

Editing Messages

1. In SIMATIC Manager, select the generated instance DB, for example, "DB1" and then call the menu command **Edit > Special Object Properties > Message** to open the message configuration dialog box.

   Result: The "Message Configuration" dialog box is opened and the selected instance DB with the message number allocated by the system is displayed.
2. Enter the required changes for the corresponding instance DB in the appropriate tabs and add other display devices if you wish. Exit the dialog box with "OK."

   Result: The message configuration for the selected instance DB is then complete.

Transferring Configuration Data

- Transfer the configured data to the WinCC database (via the AS-OS connection configuration) or the ProTool database.

16.2.2.2 How to Edit Block-Related Messages (Project-Oriented)

1. In the SIMATIC Manager, select a block and then select the menu command **Edit > Special Object Properties > Message**.
2. In the folder structure, click a message block input or one of its subnumbers (if available).

   Result: The tabbed section for a standard message is displayed.
3. Enter the required texts and attributes in the "Text" and "Attributes" tabs.

   Result: You have created a standard message that can be displayed on all display devices.
4. Using the "New Device" button, add a new display device of the type "ProTool" (Opx) or "WinCC." Only those display devices on which the configured messages can be displayed are available for selection.

   Result: The new device is added and selected, and the corresponding tabbed section is displayed.
5. Enter attributes and texts for the display-specific message in the display-specific "Texts" and "Attributes" tabs.

   Result: You have created a message variation that is only used as the message for the selected display device.

If you want to edit other message variations for existing display devices:

- Select and open the message block in the detailed view by double-clicking it.

  Result: The first display device is automatically selected and you can now edit display-specific message variations for it.

16.2.2.3 How to Configure PCS 7 Messages (Project-Oriented)

For editing message types and messages to be output on WinCC display devices, the PCS7 message configuration function in STEP 7 provides a user-friendly method of:

- Simplifying the configuration of display devices (created automatically)
- Simplifying the entry of attributes and texts for messages
- Ensuring that messages are standardized.

Opening the PCS7 Message Configuration Function

1. In the SIMATIC Manager, select the block (FB or DB) whose message texts you want to edit. Select the menu command **Edit > Object Properties** to open the dialog box for entering system attributes.
2. In the table shown, enter the system attribute "S7_alarm_ui" and the value: "1" (the value 0 disables the PCS7 message configuration tool). Property parameters can be set in LAD/STL/FBD. DBs generated afterwards and assigned to the corresponding FBs take on these attributes and can be switched independently of their message type (FB).
   Note: A syntax check is performed when you enter the system attributes. Faulty entries are highlighted in red.
3. Exit the dialog box with "OK."
4. Select the menu command **Edit > Special Object Properties > Message**

   Result: The "PCS7 Message Configuration" dialog box is opened.

Editing Message Types

1. In the SIMATIC Manager, select the FB whose message texts you want to edit, and open the PCS7 message configuration dialog box.

   Result: The dialog box displays a tab for each message block for which you declared a variable in the FB.
2. Fill out the text boxes for the message components "Origin," "OS area," and "Batch ID."
3. Enter the message class and the event text for all events of the message blocks used and specify whether every event must be acknowledged individually.
4. For the message parts that apply for all instances and should not be changed, select the "Locked" check box.

Editing Messages

1. Open SIMATIC Manager. Select the instance DB whose message texts you want to edit and open PCS7 message configuration function.
2. Do not edit instance-specific message parts that are not locked.

16.2.3 Assigning and Editing Symbol-Related Messages

16.2.3.1 How to Assign and Edit Symbol-Related Messages (Project-Oriented)

Symbol-related messages (SCAN) are assigned directly to a signal in the symbol table. Permitted signals are all Boolean addresses: inputs (I), outputs (Q), and bit memory (M). You can assign these signals different attributes, messages texts, and up to 10 associated values with the message configuration function. You can make it easier to select signals in the symbol table by setting filters.

With a symbol related message you can scan a signal in a predefined time interval to determine whether a signal change has taken place.

Note

The time interval is dependent on the CPU used.

Basic Procedure

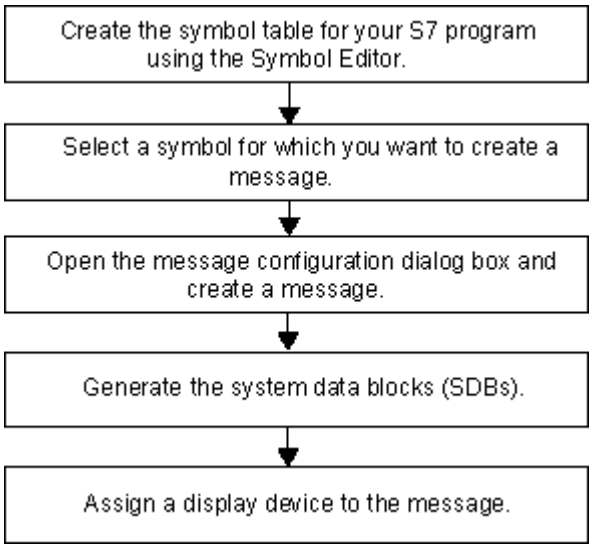

During processing, the signals for which you have configured messages are checked asynchronously to your program. The checks take place at the configured time intervals. The messages are displayed on the assigned display devices.

Caution

If you want to assign or edit symbol-related messages and, during the same work procedure, you have previously copied symbols between two symbol tables, you will then have to first close the symbol table that you no longer need to work in. Otherwise, you will not be able to save your message configurations. Under certain conditions, the last entries made in the message configuration dialog will be lost.

16.2.4 Creating and Editing User-Defined Diagnostic Messages

Using this function you can write a user entry in the diagnostic buffer and send a corresponding message that you create in the message configuration application. User-defined diagnostic messages are created by means of the system function SFC52 (WR_USMSG; Error Class A or B) that is used as a message block. You must insert the call for the SFC52 in your user program and allocate it the event ID.

Requirements

Before you can create a user-defined diagnostic message, you must have done the following:

- Created a project in the SIMATIC Manager
- Created a S7 program in the project to which you want to assign one or more messages.

Basic Procedure

To create and display a user-defined diagnostic message, proceed as follows:

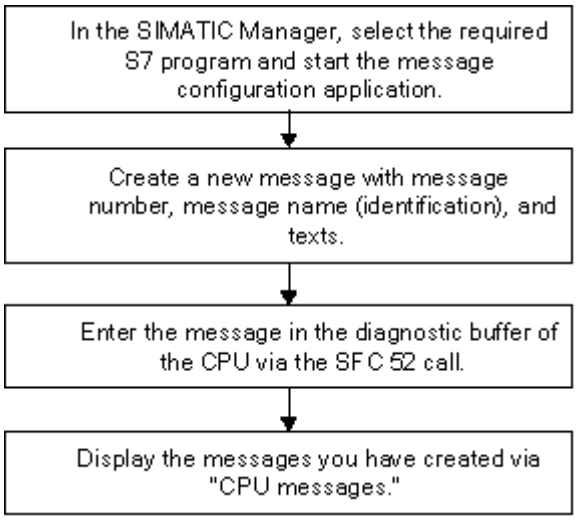

16.3 CPU-Oriented Message Configuration

16.3.1 How to Assign CPU-Oriented Message Numbers

Messages of the CPU are identified by a unique number. This is done by assigning each CPU a number area. Other than for assigning project-oriented message numbers, there is no need to assign a new number area to the new program. A new compilation of the program is therefore not required. Note the exception when you copy individual blocks: In this case, you must recompile the program in order to implement the modified message number.

Requirements

- WinCC V6.0
- ProTool V6.0

16.3.2 Assigning and Editing Block-Related Messages

16.3.2.1 How to Create Block-Related Messages (CPU-Oriented)

Principles of operation

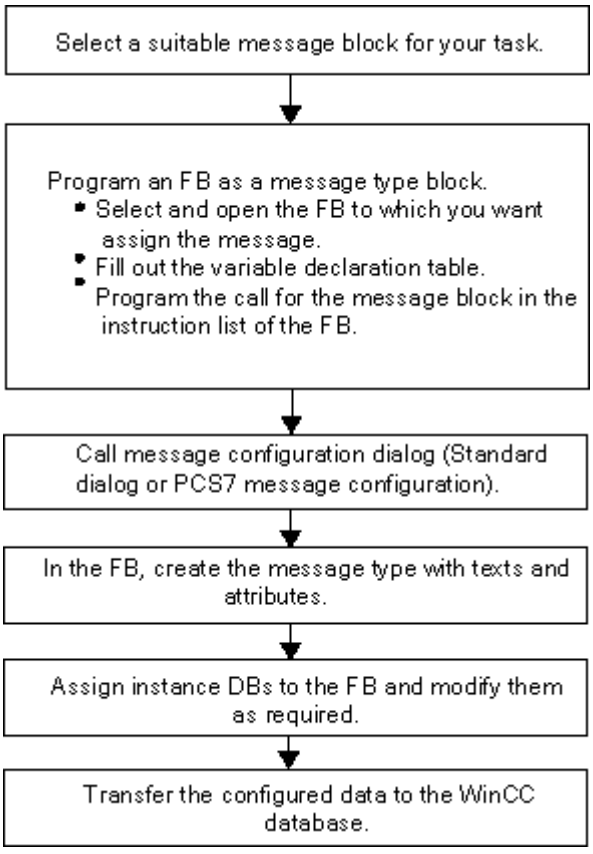

Programming Message-Type Blocks (FB)

1. In SIMATIC Manager, select the function block (FB) for which you want to generate a block-related message and double-click to open it.

   Result: The selected block is opened and displayed in the "LAD/STL/FBD" window.

2. Fill out the variable declaration table. You must declare the corresponding variables in the calling function block for every message block that is called in the function block.

   Enter the following variables in the variable overview column:

   - For the parameter "IN" enter a symbolic name for the message block input, for example, "Meld01" (for message input 01) and the data type (must be "DWORD" without an initial value).
   - For the parameter "STAT" enter a symbolic name for the message block to be called, for example, "alarm" and the corresponding data type, here "SFB33."

3. In the code section of the function block, insert the call for the selected message block, here "CALL alarm", and finish your entry with RETURN.

   Result: The input variables for the called message block (here SFB 33) are displayed in the code section of the function block.

4. Assign the symbolic name you assigned in step 2. for the message block input, here "Mess01," to the variable "EV_ID".

   Result: A flag should appear in the "Name" column for parameter "IN" if the column is not selected. The selected block is then set as a message-type block. The required system attributes (for example, S7_server and S7_a_type) and the corresponding values are assigned automatically (Note: for certain SFCs you will have to assign the system attributes for the parameter "IN" yourself. To do this select the menu command **Edit > Object Properties** and then select the "Attributes" tab.).

   Caution: If you call an FB that contains multiple instances and configured messages instead of an SFB, you must also configure the messages of this FB in the calling block.

5. Repeat steps 2. to 4. for all calls to message blocks in this function block.
6. Save the block using the menu command **File > Save**.
7. Close the "LAD/STL/FBD" window.

Opening the Message Configuration Dialog Box

- Select desired message block and then select the menu command **Edit > Special Object Properties > Message** in the SIMATIC Manager.

  Result: The STEP 7 message configuration dialog box is opened. Information on opening the PCS7 Message Configuration function can be found under PCS7 Message Configuration (CPU-Oriented).

Editing a Message Type

- Select the desired message block.
- Enter the required text in the appropriate columns or select the required attributes.
  In the "Message Configuration" dialog box, you can click on the "More" button and enter the message text and additional text in the "Default Texts" tab
  If you selected a multi-channel message block (for example, "ALARM_8"), you can assign specific texts and, to certain extent, specific attributes to each subnumber.
- If the texts or attributes for the instance should not be changed, you can lock them in the message type.

Creating Instance Data Blocks

1. When you have created a message type, you can associate instance data blocks to it and edit the instance-specific messages for these data blocks.
   To do this, in the SIMATIC Manager open the block that is to call your previously configured function block, for example, "OB1" by double-clicking it. In the open code section of the OB, enter the call ("CALL"), the name and number of the FB to be called and of the instance DB that you want to associate with the FB as an instance. Confirm your entry with RETURN.

   Example: Enter "CALL FB1, DB1". If DB1 does not yet exist, confirm the prompt asking whether you want the instance DB created with "Yes."

   Result: The instance DB is created. In the code section of the OB, the input variables of the associated FBs, here for example "Mess01," and the message number allocated by the system, here "1," are displayed.
2. Save the OB with the menu command **File > Save** and close the "LAD/STL/FBD" window.

Editing Messages

1. In the SIMATIC Manager, select the created instance DB, for example, "DB1" and select the menu command **Edit > Special Object Properties > Message** to open the message configuration dialog box.

   Result: The "Message Configuration" dialog box is opened and the selected instance DB with the message number assigned by the system is displayed.
2. Enter the required changes for the corresponding instance DB in the appropriate tabs and add other display devices if you wish. Exit the dialog box with "OK."

   Result: The message configuration for the selected instance DB is then complete.

Note

If texts and attributes for an instance are displayed in green, this means the following: these texts and attributes are still as they were configured in the message type. They have not been changed at the instance.

Transferring Configuration Data

- Transfer the configured data to the WinCC database (via the AS-OS connection configuration) or the ProTool database.

16.3.2.2 How to Edit Block-Related Messages (CPU-Oriented)

1. Select a message block, and then select the menu command **Edit > Special Object Properties > Message** to call message configuration.
2. Enter your required text in the "Default Texts" and "Additional Texts" columns.
   You can also click on the "More" button and enter your required text (with line breaks) in the "Default Texts" and "Additional Texts" dialog boxes.

   Result: You have created a standard message.

Note

If texts and attributes for an instance are displayed in green, this means the following: these texts and attributes are still as they were configured in the message type. They have not been changed at the instance.

16.3.2.3 How to Configure PCS 7 Messages (CPU-Oriented)

For editing message types and messages to be output on WinCC display devices (as of V6.0), the PCS7 message configuration function in STEP 7 provides a user-friendly method of:

- Simplifying the configuration of display devices
- Simplifying the input of attributes and texts for messages
- Ensuring that messages are standardized.

Opening the PCS7 Message Configuration Function

1. In SIMATIC Manager, select the block (FB or DB) whose message texts you want to edit. Select the menu command **Edit > Object Properties** to open the dialog box for entering system attributes.
2. In the table shown, enter the system attribute "S7_alarm_ui" and the value: "1" (the value 0 disables the PCS7 message configuration tool). Property parameters can be set in LAD/STL/FBD. DBs generated afterwards and assigned to the corresponding FBs take on these settings and can be switched using their own attribute settings, independently of their message type (FB).
   Note: A syntax check is performed when you enter the system attributes. Faulty entries are highlighted in red.
3. Exit the dialog box with "OK."
4. Select the menu command **Edit > Special Object Properties > Message**

   Result: The "PCS7 Message Configuration" dialog box is opened.

Editing Message Types

1. In SIMATIC Manager, select the FB whose message texts you want to edit, and open the PCS7 message configuration dialog box.
2. Click on "More" to open the "Message text block". Fill out the text boxes for the message components "Origin," "OS area," and "Batch ID."
3. Enter the message class and the event text for all events of the message blocks used and specify whether every event must be acknowledged individually.
4. For the message parts that apply for all instances and should not be changed, select the "Locked" check box.

Editing Messages

1. Open SIMATIC Manager. Select the instance DB whose message texts you want to edit and open PCS7 message configuration function.
2. Do not edit instance-specific message parts that are not locked.

16.3.3 Assigning and Editing Symbol-Related Messages

16.3.3.1 How to Assign and Edit Symbol-Related Messages (CPU-Oriented)

Symbol related messages (SCAN) are assigned directly to a signal in the symbol table. Permitted signals are all Boolean addresses: inputs (I), outputs (Q), and bit memory (M). You can assign these signals different attributes, messages texts, and up to 10 associated values with the message configuration function. You can make it easier to select signals in the symbol table by setting filters.

With a symbol related message you can scan a signal in a predefined time interval to determine whether a signal change has taken place.

Note

The time interval is dependent on the CPU used.

Basic Procedure

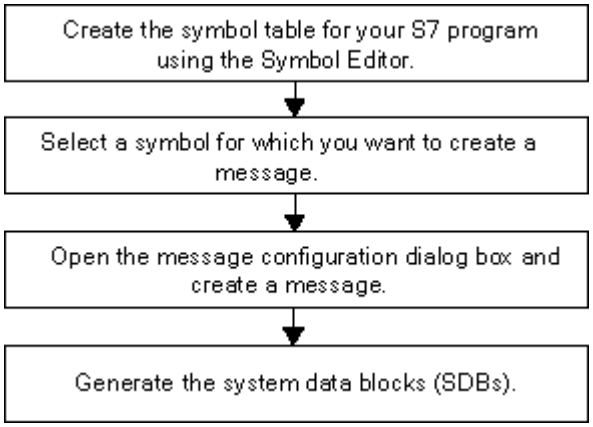

During processing, the signals for which you have configured messages are checked asynchronously to your program. The checks take place at the configured time intervals. The messages are displayed on the assigned display devices.

Caution

If you want to assign or edit symbol-related messages and, during the same work procedure, you have previously copied symbols between two symbol tables, you will then have to first close the symbol table that you no longer need to work in. Otherwise, you will not be able to save your message configurations. Under certain conditions, the last entries made in the message configuration dialog will be lost.

16.3.4 Creating and Editing User-Defined Diagnostic Messages

Using this function you can write a user entry in the diagnostic buffer and send a corresponding message that you create in the message configuration application. User-defined diagnostic messages are created by means of the system function SFC52 (WR_USMSG; Error Class A or B) that is used as a message block. You must insert the call for the SFC52 in your user program and allocate it the event ID.

Requirements

Before you can create a user-defined diagnostic message, you must have done the following:

- Created a project in the SIMATIC Manager
- Created a S7 program in the project to which you want to assign one or more messages.

Basic Procedure

To create and display a user-defined diagnostic message, proceed as follows:

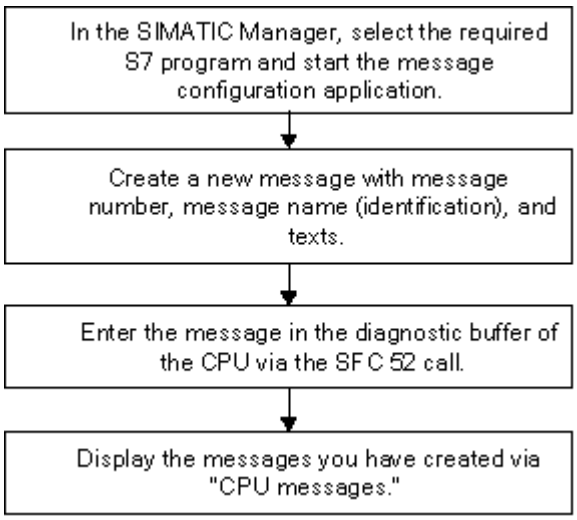

16.4 Tips for Editing Messages

16.4.1 Adding Associated Values to Messages

To add current information (such as from a process) to block-related and symbol-related messages, you can insert associated values at any point in a message text.

To add values, proceed as follows:

1. Create a block with the following structure:
   @<No. of associated value><Element type><Format code>@.
2. Insert this block at the locations in the message text where the associated value is to be displayed.

Element Type

This parameter assigns a unique identification to the data type of the associated value:

Element Type	Data Type
Y	BYTE
W	WORD
X	DWORD
I	Integer
D	Integer
B	BOOL
C	CHAR
R	REAL

The element type only uniquely specifies the data type transferred by the PLC. It is not used as a casting operator.

Format Code

These codes specify the output format for the associated value on the display device. A format instruction is introduced by a "%" sign. For message texts, there are the following fixed message codes:

Format Code	Description
%[i]X	Hex value with i index
%[i]u	Unsigned decimal value with i index
%[i]d	Signed decimal value with i index
%[i]b	Binary value with i index

%[i][.y]f	Integer (fixed-point no.) Signed value with the format [-]dddd.dddd dddd: one or more digits with y places after the decimal point and i total places
%[i]s or %[i]c (only for WinCC)	Character string (ANSI string) with i places Characters are printed to the first 0 byte (00hex).
%t#<name of the text library>	Access to text library.

If the format code is too small, the value is still output in its full length.

If the format code is too large, an appropriate number of blanks are output before the value.

Note

Note that you can also optionally specify the "[i]", in which case you must leave out the brackets when you enter this parameter.

Examples of Associated Values

@1I%6d@: The value from associated value 1 is displayed as a decimal number having a maximum of 6 places.

@2R%6f@: The value "5.4," for example, from associated value 2 is displayed as an integer "5.4" (three leading blanks).

@2R%2f@: The value "5.4," for example, from associated value 2 is displayed as an integer "5.4" (for a number of places that is too small, truncation does not occur).

@1W%t#Textbib1@: Associated value 1 of the data type WORD is the index with which the text to be used is referenced in the text library TextLib1.

Note

When using S7-PDIAG, you must always indicate "C" for the element type CHAR and "R" for the element type REAL. For all other element types valid for S7-PDIAG (BOOL, BYTE, WORD, INT, DWORD and DINT), you must always specify "X".

If you wish to pass one of the ALARM_S blocks more than one associated value, you can send an array with a maximum length of 12 bytes. This can be, for example, a maximum of 12 bytes or characters, a maximum of 6 words or Int or a maximum of 3 double words, real or DInt.

16.4.2 Integrating Texts from Text Libraries into Messages

You can integrate as many texts as you want from a maximum of four different text libraries into one message. The texts can be placed freely, so their use in foreign language messages is also guaranteed.

Proceed as follows:

1. In the SIMATIC Manager, select the CPU or an object subordinate to the CPU and select the menu command **Options > Text Libraries > System Text Libraries** or **Options > Text Libraries > User-Specific Text Libraries** to open a text library.

Caution

You can only integrate texts from user text libraries into messages if you have selected to assign message numbers to the CPU (CPU-oriented message numbers).

2. Determine the index of the text that you want to integrate.
3. At the place in the message where you want the text to appear, enter a placeholder in the format @[Index]%t#[Textbib]@

Note

[Index] = 1W, where 1W is the first associated value for the message of type WORD.

Example

Configured message text: Pressure rose @2W%t#Textbib1@

Text library with the name Textbib1:

Index	German	English
1734	zu hoch	too high

The second associated value transferred has been assigned the value 1734. The following message is displayed: Pressure rose too high.

16.4.3 Deleting Associated Values

You can delete associated values by deleting the character string in the message text which represents the associated value.

Proceed as follows:

1. Locate the block of information in the message text corresponding to the associated value that you want to delete.
   The block begins with an @ sign, followed by a location designator identifying the associated value as well as a format code; it ends with another @ sign.
2. Delete this information from the message text.

16.5 Translating and Editing Operator Related Texts

Texts that are output on display devices during process editing were usually input in the same language used to program the automation solution.

It may often be the case that an operator who is to react to messages on a display device does not speak this language. This user needs texts written in his native language to ensure smooth, problem-free processing and quick reaction to messages output by the system.

STEP 7 allows you to translate any and all operator related texts into any language required. To do this, you have to install the desired language in your project. The number of languages available is determined when Windows is installed (system property).

In this way you can be certain that any user faced with such a message at a later date will have it displayed in the appropriate language. This system feature considerably increases processing security and accuracy.

Operator related texts are user texts and text libraries.

16.5.1 Translating and Editing User Texts

You can create user texts for an entire project, for S7 programs, the block folder or individual blocks, and for the symbol table if messages are configured in these objects. They contain all texts and messages that can be shown on display devices, for example. For one project, there can be several lists of operator related texts that you can translate into the required languages.

You can select the languages that are available in a project (menu command **Options > Language for Display Devices…**). You can also add or delete languages later.

Exporting and Importing Operator Related Texts

You can translate or edit operator related texts that were created in STEP 7 outside of STEP 7. To do this, export the displayed list of operator related texts in export files that you can edit with an ASCII-based Editor or a spreadsheet tool such as Microsoft EXCEL (Menu command **Options > Manage Multilingual Texts > Export**). After you have opened the file, the screen displays a table that contains a column for each language. The first column always displays the set standard language. After the texts have been translated, re-import them again in STEP 7.

You can only import operator related texts into the part of the project from which you exported them.

Basic Procedure

Ensure that you have set your target languages for the text translation in SIMATIC manager, under menu command **Options > Language for Display Devices**.

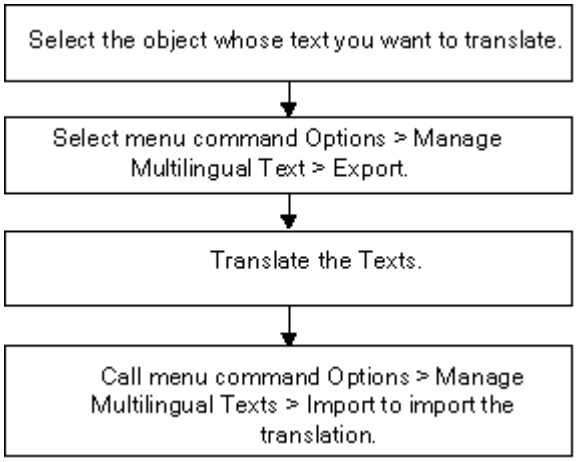

Note

You can print user text only under the application used for the translation.

16.6 Translating and Editing Text Libraries

16.6.1 User Text Libraries

A user text library lets you view text or text segments dynamically, depending on the associated value. Here, the associated value provides the text library index for the current text. A placeholder is entered at the position were the dynamic text is to be displayed.

You can create user libraries for a program in which you can enter text and select your own index. The application will automatically check the index in the user library for uniqueness. All messages available for this CPU can contain a cross-reference to a user text library.

The number of text libraries in a text library folder is unlimited. It is therefore possible, for example, to use the same program for different controlling tasks and merely adapt the text libraries to application requirements.

Caution

When you copy a message-type block that contains a cross-reference to a text library into another program, you must include the corresponding text libraries, or create a new text library of the same name or edit the cross-reference in the message text.

An index is always assigned by default when you create a text entry. When you enter a new line, the application proposes the next free index as the default. Ambiguous indexes are not permitted in text library and are rejected by the application.

16.6.2 Creating User Text Libraries

To create a user text library, proceed as follows:

1. In SIMATIC Manager, select the program or the subordinate object within the program for which you want to create a user text library. In SIMATIC Manager, select the menu command **Insert > Text Library > Text Library Folder**.

   Result: The "Text Library" folder is created.
2. Now, select the "Text Library" folder. Select the menu command **Insert > Text Library > User Text Library** and name the text library.
3. To open the new text library, select menu command **Options > Text Libraries > User Text Library**
4. Now you can enter your text.

Note

An index is always assigned by default when you create a text entry. When you enter a new line, the application proposes the next free index as the default. Ambiguous indexes are not permitted in text library and are rejected by the application.

16.6.3 How to Edit User Text Libraries

To edit existing user text libraries, proceed as follows:

1. In SIMATIC Manager, select the program or the subordinate object within the program whose text library you want to edit and then select the menu command **Options > Text Libraries > User Text Library**.
2. Select the text library you want to open from the "Available Text Libraries" dialog box.
3. Edit the displayed texts. There are various editing functions available (such as Find and Replace).
   You can enter your own texts. You can always change the index that is automatically generated for the texts. If you should happen enter a previously assigned index, its value is highlighted in red.
   To insert a new row, select the menu command **Insert > New Row** or click on the corresponding toolbar icon.
4. If you require a hardcopy, print the texts.
5. Close the user text library after you have completed all tasks.
6. Close the application after you have edited all texts required.

Caution

When you copy a message-type block that contains a cross-reference to a text library into another program, you must include the corresponding text libraries, or create a new text library of the same name or edit the cross-reference in the message text.

When you change the name of an existing text library, you will render the associated values cross-referenced to this text library invalid in already configured messages!

16.6.4 System Text Libraries

System text libraries are automatically created when blocks are generated, e.g. in "Report System Errors". The user can not create system text libraries and can only edit existing text libraries.

All messages available for this CPU can contain a cross-reference to a text library

16.6.5 Translating Text Libraries

System text libraries and user text libraries provide a list of texts that can be integrated into messages, updated dynamically at run time, and shown on a programming device or other display device.

The texts in system text libraries are provided by STEP 7 or STEP 7 optional packages. There can be several text libraries assigned to one CPU. You can translate these texts into the required languages.

In the SIMATIC Manager, you can select the languages that are available in a project (menu command **Options > Language for Display Devices…**). You can also add or delete languages later.

When you initiate the translation of a text library (Menu command **Options > Manage Multilingual Texts > Export**), an export file will be generated that you can edit in Microsoft EXCEL, for example. After you have opened the file, the screen displays a table that contains a column for each language

Caution

Never open a *.cvs export file with double-click on the file. Always use menu command **File > Open** under Microsoft EXCEL to open the file.

Note

You can print user text only in the application used for the translation.

Example of an export file

German	English
ausgefallen	Failure
gestört	Disruption
Parametrierfehler	Parameter assignment error

Basic Procedure

In the SIMATIC Manager, with the menu command **Options > Language for Display Devices…**, make sure that you have set the languages into which you want to translate a text library.

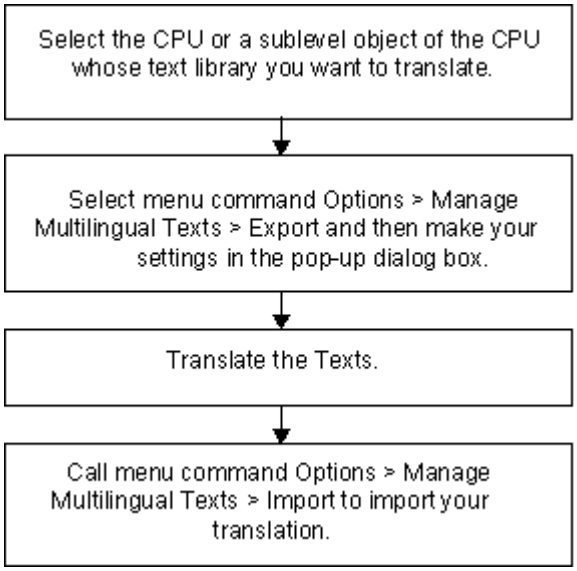

16.7 Transferring Message Configuration Data to the Programmable Controller

16.7.1 Transferring Configuration Data to the Programmable Controller

Overview

Use the transfer program AS-OS Engineering to transfer the message configuration data generated to the WinCC database.

Requirements

Before you start the transfer, the following requirements must be fulfilled:

- You have installed "AS-OS Engineering"
- You have generated the configuration data for creating messages.

Basic Procedure

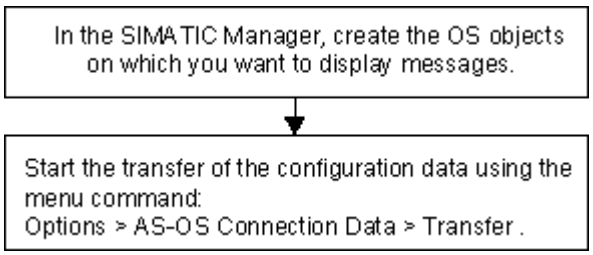

16.8 Displaying CPU Messages and User-Defined Diagnostic Messages

With the "CPU Messages" function (Menu command **PLC > CPU Messages**), you can display asynchronous messages on diagnostic events and user-defined diagnostic messages as well as messages from ALARM_S blocks (SFC 18 and SFC 108 for generating block-related messages that are always acknowledged as well as SFC 17 and SFC 107 for generating block-related messages that can be acknowledged).

You can also start the message configuration application from the CPU Messages application using the menu command **Edit > Message > User-Defined Diagnostics** and create user-defined diagnostic messages. The requirement for this is that you started the CPU Messages application via an online project.

Display Options

With the "CPU Messages" function, you can decide whether and how online messages for selected CPUs are displayed.

- "**Highlight in the Task Bar**": As soon as a message is received and the window is not on top, "CPU Message" is highlighted in the Windows task bar.
- "**Leave in the Background**": The CPU messages are received in the background. The window remains in the background when new messages are received and can be brought to the foreground if required.
- "**Ignore Message**": New CPU messages are **not** displayed and, in contrast to the other two modes, **not** archived.

In the "CPU Messages" window you can select the "Archive" tab or the "Interrupt" tab. In both tabs you can select the menu command **View > Display Info Text** to specify whether the messages are displayed with or without Info text. The user can sort the columns as required.

"Archive" Tab

Incoming messages are here displayed and archived, sorted by the event message time. The volume of the archive (between 40 and 3000 CPU messages) can be set via menu command **Options > Settings** in the "Settings - CPU Messages" dialog box. The oldest queued message will be deleted if the set archive volume is exceeded.

Acknowledgeable messages (ALARM_SQ and ALARM_DQ) are displayed in bold letters. You can acknowledge these messages under the menu command **Edit > Acknowledge CPU Message**.

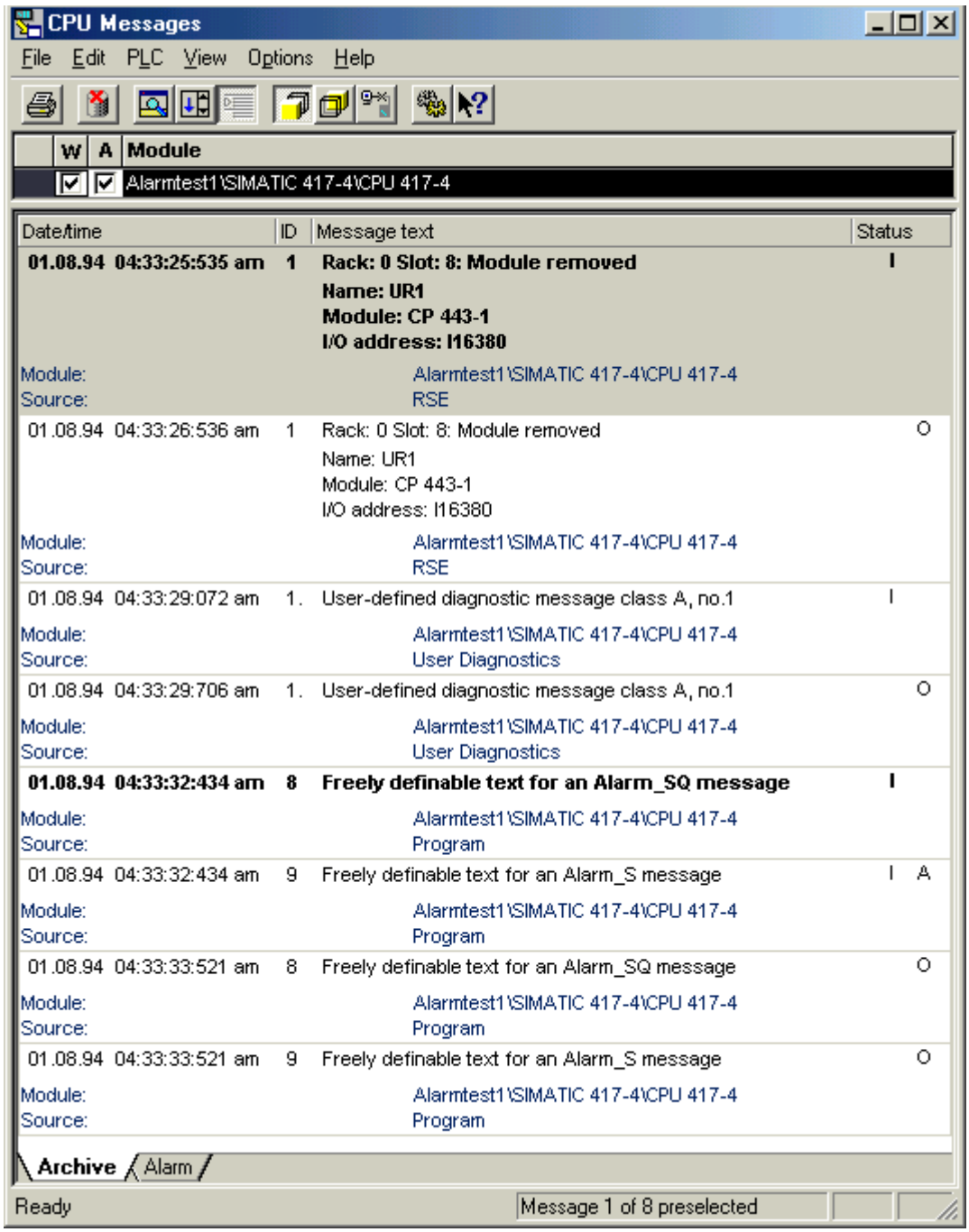

"Interrupt" Tab

The status of queued messages from ALARM_S blocks that have not yet been received or acknowledged is also displayed in the "Interrupt" tab.

You can select the menu command **View > Multiline Messages** to display messages on one or more lines. In addition, you can sort the columns as necessary.

Updating Messages from ALARM_S Blocks

During updating all unsent or unacknowledged messages are entered in the archive again. The messages are updated:

- If a restart is performed on the module to which the messages relate (not a cold restart)
- If you click the option "A" for messages from ALARM_S Blocks in the module list.

Basic Procedure

To configure CPU messages for selected modules:

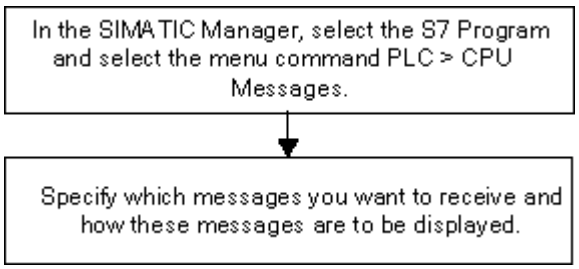

16.8.1 Configuring CPU Messages

To configure CPU messages for selected modules, proceed as follows:

1. In the SIMATIC Manager, start the CPU Messages application via an online project. To do this, select an S7 program online and call the CPU Messages application for the selected CPU using the menu command **PLC > CPU Messages**.

   Result: The "CPU Messages" application window appears which lists the registered CPU.

2. You can extend the list of registered CPUs by repeating step 1. for other programs or interfaces.
3. Click the check box in front of the list entries and specify which messages should be received for the module:

   A: activates messages from ALARM_S blocks (SFC 18 and SFC 108 for generating block-related messages that are always acknowledged as well as SFC 17 and SFC 107 for generating block-related messages that can be acknowledged), for example, reporting process diagnostic messages from S7 PDIAG, S7-GRAPH, or system errors.

   W: activates diagnostic events.

4. Set the size of the archive.

   Result: As soon as the above messages occur, they are written in the message archive and displayed in the form you selected.

Note

The CPUs for which you have called the menu command **PLC > CPU Messages** in the SIMATIC Manager are entered in the list of registered modules in the "CPU Messages" application window. The entries in the list are retained until they are deleted in the "CPU Messages" application window.

16.8.2 Displaying Stored CPU Messages

CPU messages are always recorded in the archive unless you have selected the menu command **View > Ignore Message**. All archived messages are always displayed.

16.9 Configuring the 'Report System Errors'

16.9.1 Overview of 'Report System Error'

With STEP 7, when system errors occur you can output messages with a description of the error that has occurred and the location of the error to one or more display devices (for example, WinCC, OP).

16.9.2 Configuring the Reporting of System Errors

Introduction

When a system error occurs, hardware components and DP standard slaves (slaves whose properties are determined by their GSD file) can trigger organization block calls.

Example: If there is a wire break, a module with diagnostic capability can trigger a diagnostic interrupt (OB82).

The hardware components provide information for the system errors that occur. The start event information, that is, the local data of the assigned OB (which contain the data record 0, among other things), provide general information on the location (such as the logical address of the module) and type (such as channel error or backup battery failure) of the error.

In addition, the error can be specified in greater detail by means of additional diagnostic information (reading data record 1 with SFC51 or reading the diagnostic message of DP standard slaves with SFC13). Examples of this would be channel 0 or 1 and wire break or measuring-range overrun.

With the Report System Error function, STEP 7 offers a convenient way to display diagnostic information supplied by the component in message form.

STEP 7 generates the necessary blocks and message texts. All the user has to do is load the generated blocks into the CPU and transfer the texts to connected HMI devices.

To display diagnostic events on an HMI device graphically, you can create a PROFIBUS DP DB (default DB 125) or a PROFINET IO DB (default DB 126). The elements "Map_ErrorNo" and "Map_HelpNo" are declared in the interface of each data block. During operation, these are supplied with an error or help text ID. The 'Report System Error' application exports the possible values and their significance to csv files in the selected folder during generation. To be able to display the significance of an error or help text ID, the HMI must import these texts.

You can create a data block to support the CPU Web server (default DB127) to display the module status in the Web server of the CPU.

You will find a complete overview of the supported diagnostic information for various slaves in the section Supported Components and Functional Scope

Basic Procedure

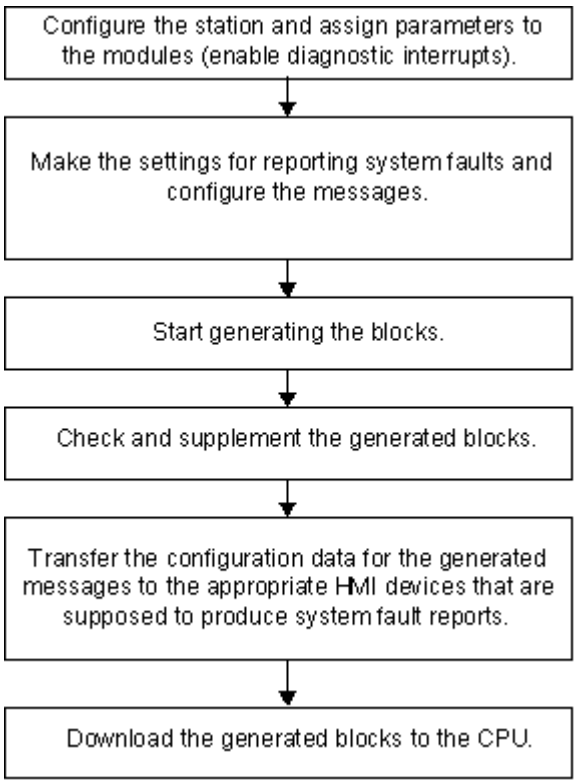

The messages are sent by means of the standard message path ALARM_S/SQ to CPU Messages on the programming device or to the connected HMI devices. The sending of message to an HMI device can be deselected.

16.9.3 Supported Components and Functional Scope

The components of S7 300 stations, S7 400 stations, PROFINET IO devices, DP slaves, and WinAC are supported by Report System Error, as long as they support functions such as diagnostic interrupt insert/remove module interrupt, and channel-specific diagnostics.

The following components are **not** supported by Report System Error:

- PROFIBUS-DP configurations on DP master interface module (CP 342-5 DP) in S7-300 stations
- PROFINET IO devices over an external controller (CP 343-1 Advanced) in S7-300 stations

In the case of a restart, you must also note that missing interrupt messages can occur. This is because the message acknowledgement memory of the CPU cannot be deleted during restart but Report System Error resets the internal data. The module or channel errors that occur before startup or during a failure are not all reported.

A maximum of 8 channel errors are reported per submodule.

Note

If you use a CP 443-5 and this is in STOP mode, no master system failure will be reported during startup.

PROFIBUS-DP

In the tables that follow, you will find all the diagnostic blocks of the various PROFIBUS slaves supported by "Report System Error".

Diagnostic Field	**ID** (faulty slot)	**Channel Designation** (channel error) 1)	**Module Status** (module error, incorrect/no module)	**Device Designation**
Header ID 2)	**0x01**	**0x10**	**0x00** **Type 0x82**	**0x00 + 1 byte diagnostic info**
ET 200S	Message: "Diagnostic interrupt was triggered"	Plain-text message	Plain-text message	-
ET 200pro	Message: "Diagnostic interrupt was triggered"	Plain-text message	Plain-text message	-
ET 200M	Not evaluated	Plain-text message	Plain-text message	-
ET 200X	Message: "Diagnostic interrupt was triggered"	-	-	-
ET 200X Desina	Message: "Diagnostic interrupt was triggered"	Plain-text message	Plain-text message	-

Diagnostic Field	**ID** (faulty slot)	**Channel Designation** (channel error) 1)	**Module Status** (module error, incorrect/no module)	**Device Designation**
ET 200L	Not evaluated	-		-
ET 200B Digital	-	-	-	Message: "Diag info available"
ET 200B Analog	-	-	-	-
ET 200C Digital	-	-	-	-
ET 200C Analog	Message: "Diagnostic interrupt was triggered"	-	-	Message: "Diag info available"
ET 200U	Message: "Diagnostic interrupt was triggered"			Message: "Diag info available"
ET 200iS	Message: "Diagnostic interrupt was triggered"	Plain-text message	Plain-text message	-
ET 200eco	-	-	-	Plain-text message

Diagnostic field	**DS0/DS1** 1)	**Other version**
Header ID 2)	**0x00 Type 0x01**	**0x00 Other Type**
ET 200S	Plain-text message	-
ET 200pro	Plain-text message	-
ET 200M	Plain-text message	Not evaluated
ET 200X	-	-
ET 200X Desina	Plain-text message	-
ET 200L	Plain-text message	-
ET 200B Digital	-	-
ET 200B Analog	Plain-text message	-
ET 200C Digital	-	-
ET 200C Analog	Plain-text message	-
ET 200iS	Plain-text message	-
ET 200eco	-	-

1) DS0: Standard diagnostics, for example module fault, external auxiliary voltage or front connector missing, extent 4 bytes, contained in the local data of the OB 82.
DS1: Channel error, defined differently for each channel type, readable in the user program via SFC 51. The texts come from the S7 HW diagnostics.

2) Header identifier: Identifier in the diagnostic message that identifies different diagnostic parts.

Note

- The station errors (failure/return) are displayed in plain text for all PROFIBUS DP slaves.
- The manufacturer-specific diagnostics is supported for all PROFIBUS DP slaves with the following restrictions:
  - Only V1 slaves are supported. These are slaves with a GSD file containing the entry "DPV1_Slave=1".
  - The DP interrupt mode **must** be set to "DPV0" for this slave.

Errors that do not occur during operation (CPU in STOP, DP slave failed):

- Station errors are supported
- Module errors are supported
- Channel errors are supported and extended channel error information is evaluated

In STEP 7 the diagnostics message is displayed via the call of the module state in the on-line window "HW Config" (diagnose hardware) in the "DP Slave Diagnostics" tab card under "Hex display".

Diagnostic Repeater: The messages of the Diagnostic Repeater are output as plain text in DPV0 mode. The text is read from the GSD file.

PROFIBUS DP over IE/PB Link or IWLAN/PB Link

The PROFIBUS DP master system of an IE/PB link cannot be diagnosed.

- For a PROFIBUS DP master system downstream from an IE/PB link, the status is not updated in the PROFIBUS data block (DB 125). The diagnostics is partially performed via the PROFINET IO-DB. In this case, only the status of the slaves (OK, disrupted, failed) in the PROFINET IO DB is available, not the module and channel errors.

PROFIBUS DP/PA via DP/PA-Link

The following station statuses are detected:

- Station OK (the entire station is working properly)
- Station disrupted (an error occurred on the station, but it is continuing to run)
- Station failed (the entire station has failed)

Note

- You **cannot** configure the DP/PA Link using a GSD file.
- Diagnostics of a DP/PA Link with a 300 series CPU is **not** supported.

PROFINET IO

Below, you will find the diagnostic information from the various PROFINET devices supported by "Report System Error".

Errors that occur during operation (CPU in RUN):

- Device errors (failure, return) are supported
- Module error and submodule error (module/submodule removed, wrong module/submodule, compatible module/submodule) are supported.
- Channel errors are supported and extended channel error information is evaluated

Errors that do not occur during operation (CPU in STOP, IO device failed):

- Integrated PROFINET IO interface are supported for CPUs as of firmware version 5.0 or later.
- Otherwise, device errors are reported.

All errors are displayed in plain language messages.

The diagnostic data records (according to the PROFINET standard) can be read by SFB54 and SFB52 in the user program.

Note

- ET 200S: Slaves with packed addresses are supported..
- On PROFINET IO devices, vendor-specific diagnostics is supported.

PROFINET IO via IO Link

Channel errors are supported and extended channel error information is evaluated.

AS Interface

For AS interface slaves, a message is sent if the planned configuration does not match the actual configuration.

The following AS-i masters are supported:

- CP 342-2
- CP 343-2
- CP 343-2 P
- DP/AS-i Link 20E
- DP/AS-i LINK Advanced D (only if it is not configured per GSD file)
- DP/AS-i F-Link
- IE/AS-i Link

Shared Devices

RSE evaluates the information as to whether a (sub)module was configured as a shared device. Since RSE always views a CPU, only the (sub)modules with full access set for the CPU are taken into account in the diagnostics. Those configured as "not assigned" (sub)modules are ignored.

16.9.4 Settings for "Report System Error"

You have several possibilities for calling the dialog for the settings:

- In HW Config, select the CPU for which you would like to configure the reporting of system errors. Then select the menu command **Options > Report System Error**.
- If you have already generated blocks for reporting system errors, you can call up the dialog by double-clicking a generated block (FB, DB).
- In the Properties dialog of the station, select the option for automatic call up during Save and Compile the configuration.

You get to the option for automatic call up during Save and Compile as follows:

1. In the SIMATIC Manager, select the appropriate station.
2. Select the menu command **Edit > Object Properties**.
3. Select the Settings tab.

Note
You can also open the "Settings" tab of the properties dialog in HW Config via menu command **Station > Properties**.

In the dialog box, enter the following, in addition to other things:

- Which FB and which assigned instance DB should be generated
- Whether reference data should be generated
- Whether warnings should always be displayed during the generation of Report System Error.
- Whether the dialog box should appear when Report System Error is automatically called after saving and compiling the configuration (see setting above)
- Generating error OBs: whether or not error OBs that are not yet available should be generated in the S7 program and in which OBs "Report System Error" is to be called.
- The CPU behavior on error: You can determine which error classes cause the CPU to change to STOP mode when they occur.
- The appearance of the messages (structure and order of the possible text parts)
- Whether messages should be acknowledgeable
- Which parameters the user block interface should contain
- Which status DB(s) are generated for PROFIBUS DP, PROFINET IO or the module status in the Web server of the CPU.
- Whether you wish to set the size of the internal message buffer manually and how many messages should be sent per cycle.

You can find more detailed information in the Help on the open dialog.

16.9.5 Generating Blocks for Reporting System Errors

After you have completed your settings for reporting system errors, you can generate the required blocks (FB with assigned instance DB and one or more global DB(s) and an FC, depending on the

setting even OBs that do not yet exist). To do this, click on the "Generate" button in the "Report System Errors" dialog box.

The following blocks are generated:

- Diagnostic FB (default: FB49)
- Instance DB for the diagnostic FB (default: DB49)
- Shared DB (default: shared DB50)
- FC (default: FC49)
- Error OBs (if you have selected this option in the "OB Configuration" dialog box)
- Optional user block called by the diagnostic FB

FBs and instance DBs are called by OBs, FCs and global DBs are used by RSE-FB.

Note

If you want to reorganize your project with the menu command **File > Save As...** and the "With Reorganization" option, remember that the diagnostic blocks need to be regenerated in 'report system error'. Since the reorganization of a project with diagnostic blocks is very slow, it is advisable to delete the diagnostic blocks first and then generate them again.

16.9.6 Generated Error OBs

Depending on the CPU, you can generate the following Error OBs with "Report System Error":

- OB 70 (I/O redundancy error) with a call for the generated diagnostic FB. This OB only exists with H-CPUs.
- OB 72 (CPU redundancy error) with a call for the generated diagnostic FB. This OB only exists with H-CPUs.
- OB 73 (communication redundancy error) with a call for the generated diagnostic FB. This OB only exists with a few H-CPUs.
- OB 80 (time error)
  This OB is generated without content to prevent the CPU from going to STOP when a communication error occurs. Errors are not evaluated, no message is generated.
- OB81 (power supply error) with a call for the generated diagnostic FB.
- OB82 (diagnostic interrupt OB) with a call for the generated diagnostic FB.
- OB83 (plug/remove interrupt) with a call for the generated diagnostic FB.
- OB84 (CPU hardware fault)
  This OB is generated without contents so that the CPU does not switch to STOP mode when communication errors occur (for example, problems with the MPI terminating resistor when inserting and removing the MPI cable). Errors are not evaluated; no message is generated.
- OB85 (program execution error)
  If 'Report system error' creates this OB during the generation of the diagnostic blocks, additional networks are inserted which realize the following program sequences:
  The CPU is prevented from switching to STOP when there is an error updating the process image (for example, removing the module). This is so that the diagnostic FB in OB83 can be processed. Any CPU STOP setting after a Report System Error message takes effect in OB83. With all other OB85 error events, the CPU goes into STOP mode.

  If OB 85 already exists, it is not changed by 'Report system error'.
- OB86 (failure of an expansion rack, a DP master system, or a distributed I/O device) with a call for the generated diagnostic FB.

If the Error OBs Already Exist...

Existing error OBs are not overwritten. If required, the call for the diagnostics FB is appended.

If the Configuration Includes Distributed I/O Devices...

For evaluating errors in distributed I/O, the generated FB calls SFC13 automatically (reads diagnostic data of the DP slaves). To ensure this function, the generated FB must be called either only in OB1 or in a cyclic interrupt OB with a short time cycle and in startup OBs.

ATTENTION

Please note the following:

- The CPU no longer goes into STOP mode when Report System Error generates OB85 upon the error event Error While Updating Process Image.
- OB85 is also called up by the CPU when the following errors occur:
  - "Error event for an OB that is not loaded"
  - "Error when calling or accessing an OB that Is not loaded"

  When these errors occur, the CPU still goes into STOP mode when Report System Error generates OB85, as was the case before Report System Error was in use.
- The setting "CPU goes into STOP mode after executing diagnostic FB" is NOT effective for OB84 and OB85, because the FB of Report System Error is not called up in these OBs. In the case of OB85, this setting is noted indirectly by the FB call in OB83.

16.9.7 Generated Blocks

The diagnostic block set by 'Report System Error' (FB with associated instance DB and one or more shared DB(s) and an FC evaluates the local data of the error OB and reads any additional diagnostic information from the hardware component that caused the error.

The FB has the following properties:

- Language of generation RSE (Report System Error) (also applies to the blocks listed above)
- Know-how protected (also applies to the blocks listed above)
- Interrupts arriving delayed during run time
- If you double-click on the block, the dialog for setting the "Report System Error" function opens.

User Block

Because the diagnostics FB is know-how protected, you cannot edit it. However, the FB provides an interface for the user program so that you can access such things as the error status or the message number.

The block for evaluating in the user program (can be set in the User Block tab of the dialog) is called in the generated FB with the selected parameters. The following parameters are available:

Name	Data Type	Comments
EV_C	BOOL	//Message incoming (TRUE) or outgoing (FALSE)
EV_ID	DWORD	//Generated message number
IO_Flag	BYTE	//Input module: B#16#54 Output module: B#16#55
logAdr	WORD	//Logical address
TextlistId	WORD	//ID of the text library (default text library = 1)
ErrorNo	WORD	//Generated error number
Channel_Error	BOOL	//Channel error (TRUE)
ChannelNo	WORD	//Channel number
ErrClass	WORD	//Error Class
HErrClass	WORD	//Error Class of H Systems
SFC_RET_VAL	INT	//Return value for SFC 17/18 or SFC 107/108
ExtendedErrorNo	WORD	//Generated error number of an extended channel error
ExtendedTextlistId	WORD	//ID of the text library of an extended channel error
ExtendedAddValue	DWORD	//Additional value for extended channel diagnostics (4 bytes)

If the user FB does not exist yet, it is created by the RSE with the selected parameters.

The error texts generated for standard errors are arranged as follows:

Error Number (decimal)		**Error-OB Affected**	**Error Code in the OB**	
from	**to**		**from**	**to**
1	86	OB 72	B#16#1	B#16#56
162	163	OB 70	B#16#A2	B#16#A3
193	194	OB 72	B#16#C1	B#16#C2
224		OB 73	B#16#E0	
289	307	OB 81	B#16#21	B#16#33
513	540	OB 82		
849	900	OB 83	B#16#51	B#16#84
1537	1540	OB 86		
1729	1736	OB 86	B#16#C1	B#16#C8
1738	1742	OB 86	B#16#CA	B#16#CE
1743	1744	OB 86		

Error numbers greater than 12288 refer to channel errors. If you view the error number in hexadecimal representation, you can calculate the channel type and recognize the error bit. For an exact description, refer to the respective module help or channel help text.

Example:

12288 = W#16#3000 -> high byte 0x30 - 0x10 = channel type 0x20 (CP interface);
low byte 0x00, means error bit 0

32774 = W#16#8006 -> high byte 0x80 - 0x10 = channel type 0x70 (digital input);
low byte 0x06, means error bit 6

Diagnostic support

To display diagnostic events on an HMI device graphically, you can create a PROFIBUS DP DB (default DB 125) or a PROFINET IO DB (default DB 126). You can create a data block to support the CPU Web server (default DB 127) to display the module status in the Web server of the CPU.

16.9.8 Assignment of System Errors to Error Classes

The following table shows the system errors and their error classes:

Hardware	Error	Error class
Central		
Rack	Failure	Rack error
Power supply module / CPU	Power supply error	- *
H CPU	Redundancy loss	- *
	Redundancy reintegration	- *
Module	Plug/pull of the module or wrong module type	Module error
	Data record 0	Module error
	Channel error	Channel error
DP master	Failure	Rack error
IO controller	Failure	Rack error
AS i master	Failure	Rack error
PROFIBUS DP		
DP station	Failure	Rack error
	Manufacturer-specific diagnostics	- *
Head	Manufacturer-specific diagnostics	- *
Module	Plug/pull of the module or wrong module type	Module error
	Data record 0	Module error
	Channel error	Channel error
Diag. rep. head	Specific errors of the diagnostic repeater	- *
Head ET 200 B, C, U, Eco	Faulty	Module error
H station	Failure	Rack error
Head H station	Redundancy loss	- *
PROFINET IO		
IO device	Failure	Rack error
IO device head module	Manufacturer-specific error	- *
	Channel error	Channel error
	Maintenance	- *
	Data record 0	Module error
	Channel error for the entire head module (Subslot = 0)	Module error
IO device head submodule (PDEV)	Channel error	Channel error
	Maintenance	- *
	Data record 0	Module error
	Channel error for the entire head submodule (Subslot = 0)	Submodule error
Module	Plug/pull of the module or wrong module type	Module error
	Data record 0	Module error
	Channel error (channel 0...7FFF)	Channel error

Hardware	Error	Error class
	Channel error for the entire module (Subslot = 0)	Module error
	Maintenance (channel 0...7FFF)	- *
	Maintenance (entire module)	- *
Submodule	Plug/pull of the module or wrong module type	Submodule error
	Data record 0	Module error
	Channel error (channel 0...7FFF)	Channel error
	Channel error for the entire submodule (Subslot >= 1)	Submodule error
	Maintenance (channel 0...7FFF)	- *
	Maintenance (entire submodule)	- *
IE/PB link	Failure	Rack error
PROFIBUS station downstream from a link	Failure	Rack error
AS i Slave		
AS i slave PROFIBUS/central channel error	Failure	- *
AS i slave PROFINET module	Failure	- *

* The CPU does **not** go to STOP.

Note

The CPU doe not go to STOP in "Startup" mode.

16.9.9 Generating Foreign-Language Message Texts in 'Report System Error'

You can display the messages configured in 'Report System Error' in the languages that you installed when you installed STEP 7.

To do so, proceed as follows:

1. In the SIMATIC Manager, select the **Options > Language for Display Devices...** menu command. In the dialog box that is then displayed, add the desired language to your project.
2. Confirm your settings with "OK".
3. In HW Config, select the **Options > Report System Error...** menu command. In the dialog box that is then displayed, click the "Generate" button.
   Result: The message texts are generated for all the languages that you installed, but they are only displayed in the language that you have set as the default in the "Add/Delete Language, Set Default Language" dialog box by clicking the "Set as Default" button.

Example

You have installed STEP 7 in German, English and French, and these languages are defined in your project. Now you generate the message texts as described above. To display the messages texts in a given language, set this language as the default in the "Add/Delete Language, Set Default Language" dialog box.

Notes

If you use messages and error texts in more than one language, check the language for display devices in the "Add/Delete Languages, Set Standard Language" dialog and change it if necessary.

Texts in a language not supplied with STEP 7 are displayed in the language defined as default. You can export these texts, translate them into the required language and the import them into STEP 7 again.

If you change the language settings while editing 'Report System Error", the block must be regenerated so that the messages can be displayed in the required language.

Translating messages and error texts into a language not supplied with STEP 7

Text in a language other than those supplied with STEP 7 will be displayed in the language set as default. You can export these texts, translate them into the desired language and then import them back into STEP 7. Add the desired language (**Options > Language for Display Devices**) and set this as the default language. Before you export and compile the texts with "Manage Multilingual Texts", you must regenerate 'Report system error'.

Recommended procedure:

1. Create a reference project with all components you use.
2. In the SIMATIC Manager, select the menu command **Options > Language for Display Devices...**, add the desired language to project in the dialog box that appears and set this language as the default.
3. Confirm your settings with OK.
4. When you have completed the configuration, select the menu command **Options > Report System Errors...** in HW Config and click "Generate" in the dialog box that appears.
5. In the SIMATIC Manager, select the menu command **Options > Manage Multilingual Texts > Export** and select the texts you want to export in the dialog box that appears. Select as source language a language installed in the project that is also one of the languages delivered from STEP 7and select your desired language for target language.
   Result: Several text files are generated in the selected directory.

6. **Translate the texts from the "**S7SystemTextLibrary.xls" and "S7UserTexts.xls" files**.**
7. In the SIMATIC Manager, select the menu command **Options > Manage Multilingual Texts > Import.**
   Result: The texts you have translated are now displayed in the configured language.

Note

If you subsequently change your configuration in HW Config and/or regenerate "Report System Error", the new messages and error texts will be displayed once again in a language supplied with STEP 7. You have to translate these texts as described above. Please make sure that you select the option to add an export target in the message that appears when exporting. The new texts are inserted at the end of the corresponding text file (under "//$_Delta-Export").

17 Controlling and Monitoring Variables

17.1 Configuring Variables for Operator Control and Monitoring

Overview

STEP 7 provides a user-friendly method of controlling and monitoring variables in your process or programmable controller using WinCC.

The advantage of this method over previous methods is that you no longer need to configure data separately for each operator station (OS), you simply configure once using STEP 7. You can transfer the data generated when you configure with STEP 7 to the WinCC database using the transfer program AS-OS Engineering (part of the software package "Process Control System PCS7"), during which the consistency of the data and their compatibility with the display system are checked. WinCC uses the data in variable blocks and graphic objects.

Using STEP 7, you can configure or modify operator control and monitoring attributes for the following variables:

- Input, output, and in/out parameters in function blocks
- Bit memory and I/O signals
- Parameters for CFC blocks in CFC charts

Basic Procedure

The procedure for configuring operator control and monitoring variables is dependent on the selecting programming/configuration language and the type of variables you want to control and monitor. The basic procedure always includes the following steps, however:

1. Assign system attributes for operator control and monitoring to the parameters of a function block or to the symbols in a symbol table.

   The step is not required in CFC because you take blocks that have already been prepared from a library.

2. Assign the variables you want to control and monitor with the required attributes and logging properties in a dialog box (S7_m_c). In the Operator Interface dialog box (menu command **Edit > Special Object Properties > Operator Interface**), you can change WinCC attributes, such as limit values, substitute values, and protocol properties, etc.
3. Transfer the configuration data generated with STEP 7 to your display system (WinCC) by means of the AS-OS Engineering tool.

Naming Conventions

For the configuration data for WinCC to be saved and transferred, they are stored under a unique name automatically assigned by STEP 7. The names of the variables for operator control and monitoring, the CFC charts, and the S7 programs form part of this name and for this reason are subject to certain conventions:

- The names of the S7 programs in an S7 project must be unique (different stations may not contain S7 programs with the same name).
- The names of the variables, S7 programs, and CFC charts may not contain underscores, blanks, or the following special characters: [‘] [.] [%] [-] [/] [*] [+].

17.2 Configuring Operator Control and Monitoring Attributes with Statement List, Ladder Logic, and Function Block Diagram

Overview

Using the procedure described below, you can make function block parameters suitable for operator control and monitoring and assign the required O, C, and M attributes to associated instance DBs or shared DBs in your user program.

Requirements

You must have created a STEP 7 project, an S7 program, and a function block.

Basic Procedure

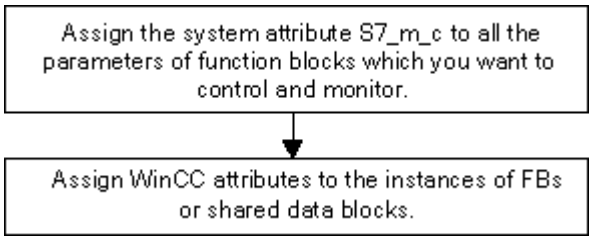

17.3 Configuring Operator Control and Monitoring Attributes via the Symbol Table

Overview

Independent of the programming language used, you can configure the following variables using the procedure described below:

- Bit memory
- I/O signals

Requirement

Before you start, the following requirements must be fulfilled:

- You have created a project in the SIMATIC Manager.
- An S7 program with a symbol table must exist in this project.
- The symbol table must be open.

Basic Procedure

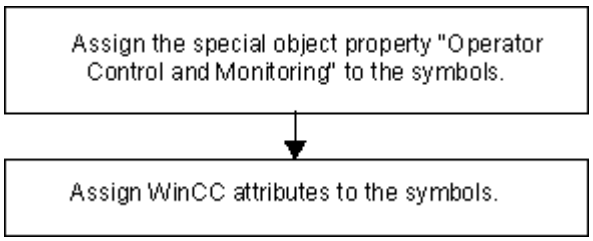

17.4 Changing Operator Control and Monitoring Attributes with CFC

Overview

With CFC, you create your user program by selecting blocks that already have operator control and monitoring capabilities from a library, and placing and linking them in a chart.

Requirement

You have inserted an S7 program in a STEP 7 project, created a CFC chart, and placed blocks in it.

Basic Procedure

Edit the object properties of the blocks.

Note

If you use blocks which you have created yourself and to which you have assigned the system attribute S7_m_c, you can give these blocks operator control and monitoring capabilities by activating the "Operator Control and Monitoring" check box in the "Operator Control and Monitoring" dialog box (menu command **Edit > Special Object Properties > Operator Control and Monitoring**).

17.5 Transferring Configuration Data to the Operator Interface Programmable Controller

Introduction

Using the transfer program AS-OS Engineering you transfer the configuration data for operator control and monitoring generated to the WinCC database.

Requirement

Before you start the transfer, the following requirements must be fulfilled:

- You have installed the program AS-OS Engineering.
- You have generated the configuration data for operator control and monitoring.

Basic Procedure

To transfer the configuration data for operator control and monitoring to the WinCC database, proceed as follows:

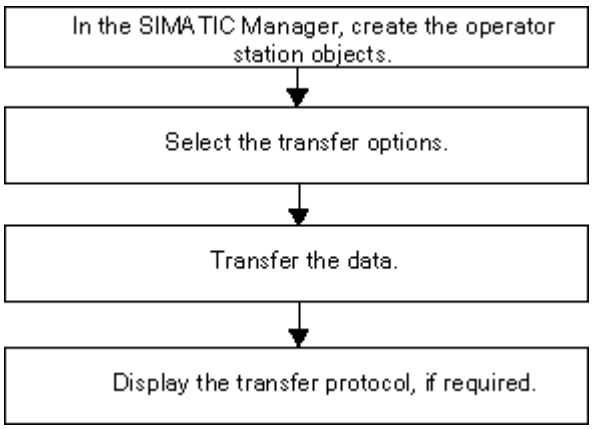

18 Establishing an Online Connection and Making CPU Settings

18.1 Establishing Online Connections

An online connection between programming device and programmable logic controller is needed to download S7 user programs/blocks, upload blocks from the S7 programmable controller to the programming device, and for other activities:

- Debugging user programs
- Displaying and changing the operating mode of the CPU
- Displaying and setting the time and date of the CPU
- Displaying module information
- Comparing blocks online and offline
- Diagnosing hardware

To establish an online connection, the programming device and programmable logic controller must be connected via a suitable interface (for example, multipoint interface (MPI)). You can then access the programmable controller via the online window of the project or the "Accessible Nodes" window.

18.1.1 Establishing an Online Connection via the "Accessible Nodes" Window

This type of access enables you to access a programmable logic controller quickly, for test purposes, for example. You can access all the accessible programmable modules in the network. Select this method if no project data about the programmable controllers are available on your programming device.

You open the "Accessible Nodes" window using the menu command **PLC > Display Accessible Nodes**. In the "Accessible Nodes" object, all the nodes accessible in the network are displayed with their address.

Nodes that cannot be programmed with STEP 7 (such as programming devices or operator panels) can also be displayed.

For PROFIBUS, the following additional information can also be shown in parentheses:

- (direct): This node is directly connected to the programming device (programming device or PC).
- (passive): Programming and status/modify via PROFIBUS DP is not possible with this node
- (waiting): This node cannot be communicated with because its configuration does not match the rest of the settings in the network.

Finding directly connected nodes

The additional information "direct" is not supported for PROFINET nodes. To still be able to find directly connected nodes, select the **PLC > Diagnostics/Settings > Node Flashing Test** menu command.

In the dialog box that is displayed, you can set the flashing duration and then start the flashing test. The directly connected node will be identified by a flashing FORCE LED.

The flashing test cannot be carried out if the FORCE function is active.

18.1.2 Establishing an Online Connection via the Online Window of the Project

Select this method if you have configured the programmable controller in a project on your programming device/PC. You can open the online window in the SIMATIC Manager using the menu command **View > Online**. It displays the project data on the programmable controller (in contrast to the offline window that displays the project data on the programming device/PC). The online window shows the data on the programmable controller for the S7 program.

You use this view of the project for functions involving access to the programmable controller. Certain functions in the "PLC" menu of the SIMATIC Manager can be activated in the online window but not in the offline window.

There are two types of access as follows:

- **Access with Configured Hardware**
  This means you can only access modules which were configured offline. Which online modules you can access is determined by the MPI address set when the programmable module was configured.
- **Access without Configured Hardware**
  The requirement for this is an existing S7 program which was created independently of the hardware (meaning it lies directly beneath the project). Which online modules you can access is determined here by specifying the corresponding MPI address in the object properties of the S7 program.

Access via the online window combines the data on the programmable control system with the relevant data on the programming device. If, for example, you open an S7 block beneath a project online, the display is made up as follows:

- Code section of the block from the CPU in the S7 programmable logic controller, and
- Comments and symbols from the database in the programming device (provided they exist offline) When you open blocks directly in the connected CPU without an existing project structure, they are displayed as they are found in the CPU, which means without symbols and comments.

18.1.3 Online Access to PLCs in a Multiproject

Cross-project access with an assigned PG/PC

The "Assign PG/PC" function for the objects "PG/PC" and "SIMATIC PC Station" are also available for the multiproject.

You can specify the target module for online access in any project of the multiproject. This procedure is the same as if you were working with one project only.

Requirements

- PGs/PCs or PC stations you want to use for online access to PLCs must have been assigned in any one project of the multiproject.

Note: The assigned PG/PC or PC station is highlighted in yellow color when the corresponding project is open.

The PG/PC assignment is only visible if the PG that opens the project is properly assigned.

- The cross-project subnets are merged.
- All projects of the multiproject have been compiled and configuration data have been downloaded to the participating stations; for example, to provide routing information to all participating modules for establishing connections between the PG/PC and the target module.
- The target modules can be accessed across the networks.

Possible problems when working with distributed projects

The PG/PC assignment is not visible if the allocation of projects is changed and a project is opened on a PG/PC on which it was not created.

Nonetheless, the configured PG/PC object still maintains the "assigned" status - but with the "wrong" PG/PC.

In this case you must clear the existing assignment and then reassign the PG/PC object. Online access to modules available within the multiproject is then possible without any problem.

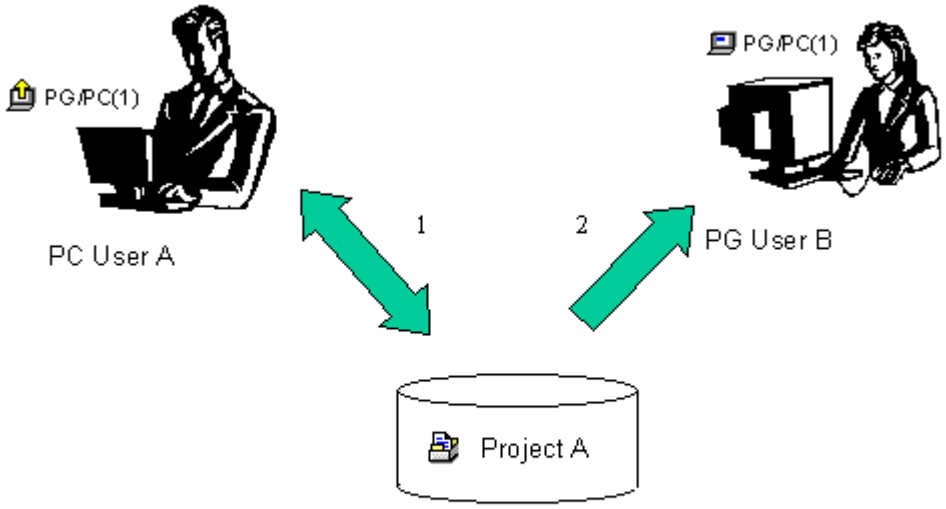

1. Save project A with assigned PG/PC on the network
2. Open the same project A with a different computer

Tip for working with distributed projects

If more than one of the team members wants to access the PLCs online on their PG, it would be useful to create one "PG/PC" or "SIMATIC PC station" object in the multiproject and then set up an assignment for each one of the PGs.

Depending on which PG has opened the project, SIMATIC Manager indicates only the object assigned to this PG with a yellow arrow.

18.1.4 Password Protection for Access to Programmable Controllers

Using password protection you can:

- Protect the user program in the CPU and its data from unauthorized changes (write protection)
- Protect the programming know-how in your user program (read protection)
- Prevent online functions that would interfere with the process

You can only protect a module or the content of a MMC (e.g. for a CPU 31xC) with a password if the module supports this function.

If you want to protect a module or the content of a MMC with a password, you must define the protection level and set the password in the course of assigning the module parameters and then download the changed parameters to the module.

If you enable the access protection on a CPU (integrated function as of STEP 7 V4.02), please remember the following: If, following enabling of this function, you attempt to edit the CPU with a version lower than STEP 7 V4.02, messages will be displayed indicating that this CPU is password protected (for example "protection level not reached", "...could not be loaded", "...could not be opened").

Note

If your CPU is set to protection level 1 and your CPU makes SFC 109 "PROTECT" available, you can switch between protection levels 1, 2 and 3 with this SFC.

If protection level 2 is set on your CPU and your CPU provides the SFC 109 "PROTECT", you can switch between the protection levels 2 and 3 with this SFC.

The call of the SFC 109 "PROTECT" with MODE=12 causes protection level 3 to be set without password legitimation. This means that you cannot remove the read and write protection set with the SFC 109 even if you have a valid password.

If you need to enter a password to execute an online function or access the content of a MMC, the "Enter Password" dialog box is displayed. If you enter the correct password, you are given access rights to modules for which a particular protection level was set during parameter assignment. You can then establish online connections to the protected module and execute the online functions belonging to that protection level.

Using the menu command **PLC > Access Rights > Setup**, you can call the "Enter Password" dialog box directly. By doing this, for example at the beginning of a session, you can enter the password once and will no longer be queried during later online accesses. The password remains effective until either the SIMATIC Manager is closed or the password is cancelled with the menu command **PLC > Access Rights > Cancel.**

CPU Parameter	Remarks
Test operation/process operation (not for S7-400 or CPU 318-2)	Can be set in the "Protection" tab. In process operation, test functions such as program status or monitor/modify variables are restricted so that the set permissible scan cycle time increase is not exceeded. This means, for example, that no call conditions are allowed in program status and the status display of a programmed loop is interrupted at the point of return. Testing using breakpoints and single-step program execution cannot be used in process operation. In test operation, all test functions via programming device/PC even if they cause considerable increases to the scan cycle time can be used without restrictions.
Protection level	Can be set in the "Protection" tab. (Note: If your CPU is set to protection level 1 and your CPU makes SFC 109 "PROTECT" available, you can switch between protection levels 1, 2 and 3 with this SFC. If protection level 2 is set on your CPU and your CPU provides the SFC 109 "PROTECT", you can switch between the protection levels 2 and 3 with this SFC.) You can make write or read/write access to the CPU dependent on knowing the correct password. The password is set in this tab.

18.1.5 Updating the Window Contents

You should note the following:

- Changes in the online window of a project as a result of user actions (for example, downloading or deleting blocks) are not automatically updated in any open "Accessible Nodes" windows.
- Any such changes in the "Accessible Nodes" window are not automatically changed in any open online windows of a project.

To update the display in a parallel open window, you must refresh the display in this window explicitly (using the menu command or the function key F5).

18.2 Displaying and Changing the Operating Mode

With this function you can, for example, switch the CPU to RUN again after correcting an error.

Displaying the Operating Mode

1. Open your project and select an S7 program, or open the "Accessible Nodes" window using the menu command **PLC > Display Accessible Nodes** and select a node ("MPI=...").
2. Select the menu command PLC > Diagnostics/Settings > Operating Mode.

This dialog box displays the current and the last operating mode and the current setting of the mode selector on the module. For modules for which the current keyswitch setting cannot be displayed, the text "Undefined" is displayed.

Changing the Operating Mode

You can change the mode of the CPU using the buttons. Only those buttons are active that can be selected in the current operating mode.

18.3 Displaying and Setting the Time and Date

Proceed as follows:

1. Open your project and select an S7 program, or open the "Accessible Nodes" window using the menu command **PLC > Display Accessible Nodes** and select a node ("MPI=...").
2. Select the menu command **PLC > Diagnostics/Settings > Set Date and Time**.
   The menu command can be selected only if an S7 program is selected in the project window (online view) or a node ("MPI=...") is selected in the "Accessible Nodes" window.
3. In the dialog box displayed you can read the current time and date on the selected module.
4. If required, you can enter new values in the "Date" and "Time" fields or you can use the default option to accept the time and date on your programming device/PC as UTC.

Note

If the module does not have a real-time clock, the dialog box shows "00:00:00" for the time and "00.00.00" for the date.

18.3.1 CPU Clocks with Time Zone Setting and Summer/Winter Time

On S7-400 CPUs as of firmware version 3, you can make or evaluate the following settings in addition to the time and date:

- Summer/Winter Time
- Offset factors for displaying time zones

Display of Time Zones

The system operates with a TOD that is global, continuous and free of interrupts, namely the Module Time.

The local automation system allows the calculation of a Local Time that differs from Module Time and which can be used by the user program. Local Time is not entered directly, but is rather calculated using the Module Time plus/minus a time difference to Module Time).

Summer/Winter Time

You can also set daylight-saving or standard time when you set up the TOD and the date. When switching from daylight-saving to standard time, for example, per user program only the time difference to the Module Time is taken into account. You can make this changeover with the block "SET_SW_S" (FB 61) from the standard library "Miscellaneous blocks".

Reading and Adjusting the TOD and The TOD Status

The summer/winter time identifier and time difference to the Module Time are included in the Time-Of-Day (TOD) status.

You have the following options to read or adjust the TOD and its status:

With STEP 7 (online)

- Via menu command **PLC > Diagnostics/Setting > Adjust TOD** (read and adjust)
- Via the "Module Information" dialog box, "Time System" tab (read only)

In the user program

- SFC 100 "SET_CLKS" (read and adjust)
- SFC 51 "RDSYSST" with SZL 132, Index 8 (read only)

Time Stamp in the Diagnostic Buffer, Messages and OB-Start Information

Time stamps are generated using the Module Time.

TOD Interrupts

OB 80 is called if TOD interrupts were not triggered due to the "Time jump" when standard time is switched to daylight saving.

For daylight saving/standard time conversion the periodicity is maintained for TOD interrupts with minute and hourly periodicity.

TOD Synchronization

A CPU that is configured as TOD Master (for example, in the CPU register "Diagnostics/Clock"), always synchronizes other clocks with the Module Time and the current TOD status.

18.4 Updating the Firmware

18.4.1 Updating Firmware in Modules and Submodules Online

As of STEP 7 V5.1 Service Pack 3, you can update modules or submodules on a station in a standardized way online. To do so, proceed as described below:

Concept

To update the firmware on a module (CPU, IM, etc.) or a submodule (DI, DO, etc.), you can download the files (*.UPD) containing the latest firmware on the Internet ("http://www.siemens.com/automation/support").

Select one of these files and download it to the module (PLC Menu).

Prerequisites

The module in the station or module whose firmware is to be updated must be available online. This means that the programming device (PG) is connected to the same MPI PROFIBUS or Ethernet as the module whose firmware is to be updated. The firmware can also be updated when the programming device (PG) is connected to the MPI interface of the DP master CPU and the module whose firmware is to be updated is connected at the PROFIBUS of the DP interface or the Ethernet of the PN interface. The CPU must support S7 routing between the MPI interface and the DP interface or between the MPI interface and the PN interface.

The module or submodule itself must support Firmware updates. PROFINET GSD devices (GSDML devices) only support firmware updates via "Show accessible devices".

The files containing the latest firmware versions must be available in the file system on your PG/PC. Only files for **one** firmware version must be in one folder.

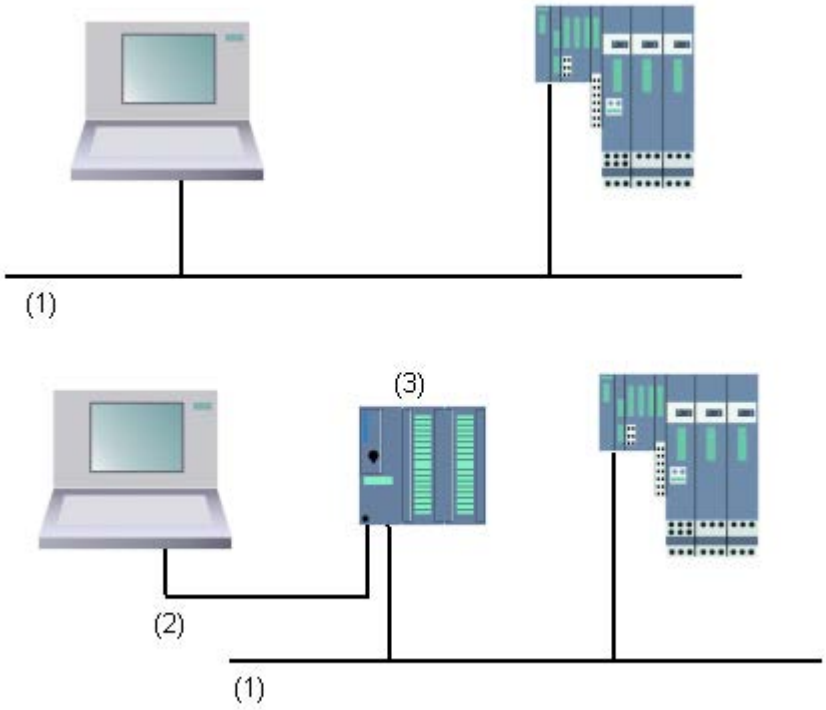

(1) PROFIBUS or Ethernet subnet

(2) MPI subnet

(3) CPU with MPI interface and DP interface or PN interface (with S7 routing)

Procedure in HW Config

1. Open the station containing the module to be updated.
2. Select the module
   For PROFIBUS DP interface modules such as an IM 151, select the icon for the DP slave. In this case, it is the one that stands for ET 200S.
3. Follow the same procedure for PROFINET IO devices.
   If you want to update the firmware of modules of a DP slave or IO device, click the "Change Slot" button and select the slot of the module you want to update in the "Change Slot" dialog.
4. Select the menu command **PLC > Update Firmware**.
   You can only activate the menu command if the selected module / DP slave / IO device or the selected submodule supports the "Update firmware" function.
5. In the "Update firmware" dialog that is displayed, click the "Browse" button and select the path to the firmware update files (*.UPD).
6. After you have selected a file, the lower fields of the "Update firmware" dialog will contain information telling you for which modules the file is suitable and as of which firmware version.

7. Click the "Run" button.
   STEP 7 checks whether the selected file can be interpreted by the module. If the check result is positive, the file is downloaded to the module.
   If the operating mode of the CPU needs to be changed, dialogs will prompt you to carry out these steps.
   The module then carries out the firmware update independently.
   Note: For a firmware update, such as to a CPU 317-2 PN/DP, a separate connection is usually established to the CPU. In such case, the process can be interrupted. If no resources are available for another connection, the existing connection is automatically used instead. In this case, the connection cannot be interrupted. The "Cancel" button in the transfer dialog is grayed out and unavailable.
8. In STEP 7, check (read out the CPU diagnostic buffer) whether the module was able to start up with the new firmware.

Procedure in SIMATIC Manager

The procedure corresponds to that in HW Config. The menu command also is PLC > Firmware update. STEP 7 however only checks if the module supports the function at the time of the execution.

Firmware Update for Modules in Redundant Mode

As of STEP 7 V5.4, a firmware updates for a modules during redundant mode is supported, such as for the IM 153-2BA00 with an active backplane bus at an H station. You can carry out a firmware update for the redundant IMs in one process; the redundant IM will automatically be provided with the latest firmware version.

Requirement: The programming device (PG) must be connected to the same PROFIBUS as one of the IMs and you perform the update by means of "Accessible Nodes" in the SIMATIC Manager.

Principle

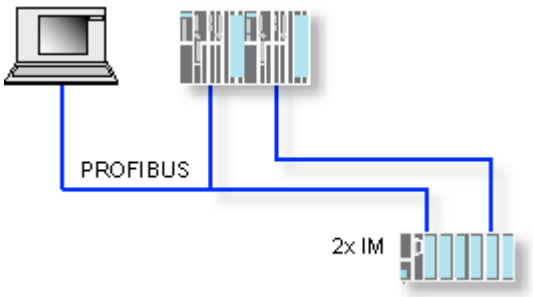

Consequences of updating the firmware during operation

You can decide to activate the new firmware immediately after updating via an option in the update dialog.

If you select this option, the station performs a restart like after POWER OFF/POWER ON. As result, it may happen that a CPU remains in STOP mode or the processing of the user program is adversely affected. You will need to take appropriate precautions in the operation of your plant to anticipate and accommodate these conditions.

For example, during a restart all modules of the station will fail, including the existing F I/O.

The F I/O outputs a communication error to the interface during POWER OFF and switches off safely - it is passivated. This passivation is not cleared by restarting the interface. You must depassivate the modules individually. However, the safety-related applications will not run as a result of this.

Updating the firmware fir CPUs 410 as of V8.2

With these CPUs, you have the option to update the firmware in one or more steps. This has the advantage that longer standstill times are minimized. The "Activate firmware after download" check box has been replaced by the following options:

If you select the option "Load and activate firmware version" the firmware is updated as decribed above.

If you select the option "Load firmware version only" the firmware is only downloaded. If the CPU is in "RUN", the firmware is downloaded to the first CPU and automatically copied to the second CPU. The copy operation is not performed in "STOP" mode.

If you select the option "Activate the loaded firmware" the firmware is activated on the module.

19 Downloading and Uploading

19.1 Downloading from the PG/PC to the Programmable Controller

19.1.1 Requirements for Downloading

Requirements for Downloading to the Programmable Controller

- There must be a connection between your programming device and the CPU in the programmable controller (for example, via the multipoint interface).
- Access to the programmable controller must be possible.
- For the download of blocks to the PLC, the entry "STEP 7" must have been selected for "Use" in the object properties dialog of the project.
- The program you are downloading has been compiled without errors.
- The CPU must be in an operating mode in which downloading is permitted (STOP or RUN-P). Note that in RUN-P mode the program will be downloaded a block at a time. If you overwrite an old CPU program doing this, conflicts may arise, for example, if block parameters have changed. The CPU then goes into STOP mode while processing the cycle. We therefore recommend that you switch the CPU to STOP mode before downloading.
- If you opened the block offline and want to download it, the CPU must be linked to an online user program in the SIMATIC Manager.
- Before you download your user program, you should reset the CPU to ensure that no "old" blocks are on the CPU.

STOP Mode

Set the operating mode from RUN to STOP before you do the following:

- Download the complete user program or parts of it to the CPU
- Execute a memory reset on the CPU
- Compress the user memory

Restart (Warm Restart (Transition to RUN Mode)

If you execute a restart (warm restart) in the "STOP" mode, the program is restarted and first processes the startup program (in the block OB100) in STARTUP mode. If the startup is successful, the CPU changes to RUN mode. A restart (warm restart) is required after the following:

- Resetting the CPU
- Downloading the user program in STOP mode

19.1.2 Differences Between Saving and Downloading Blocks

You should always distinguish between saving and downloading blocks.

	Saving	**Downloading**
Menu commands	**File > Save** **File > Save As**	**PLC > Download**
Function	The current status of the block in the editor is saved on the hard disk of the programming device.	The current status of the block in the editor is only downloaded to the CPU.
Syntax check	A syntax check is run. Any errors are reported in dialog boxes. The causes of the errors and the error locations are also shown. You must correct these errors before you save or download the block. If no errors are found in the syntax, the block is compiled into machine code and either saved or downloaded.	A syntax check is run. Any errors are reported in dialog boxes. The causes of the errors and the error locations are also shown. You must correct these errors before you save or download the block. If no errors are found in the syntax, the block is compiled into machine code and either saved or downloaded.

The table applies independent of whether you have opened the block online or offline.

Tip for Block Changes - Save First Then Download

To enter newly created blocks or changes in the code section of logic blocks, in declaration tables or to enter new or changed data values in data blocks, you must save the respective block. Any changes you make in the editor and transfer to the CPU using the menu command **PLC > Download**, -for example, for testing small changes-, must also be saved on the hard disk of the programming device in every case before you exit the editor. Otherwise, you will have different versions of your user program in the CPU and on the programming device. It is generally recommended that you save all changes first and then download them.

19.1.3 Load Memory and Work Memory in the CPU

After completing the configuration, parameter assignment, and program creation and establishing the online connection, you can download complete user programs or individual blocks to a programmable controller. To test individual blocks, you must download at least one organization block (OB) and the function blocks (FB) and functions (FC) called in the OB and the data blocks (DB) used. To download the system data created when the hardware was configured, the networks configured, and the connection table created to the programmable controller, you download the object "System Data".

You download user programs to a programmable controller using the SIMATIC Manager, for example, during the end phase of the program testing or to run the finished user program.

Relationship - Load Memory and Work Memory

The complete user program is downloaded to the load memory; the parts relevant to program execution are also loaded into the work memory.

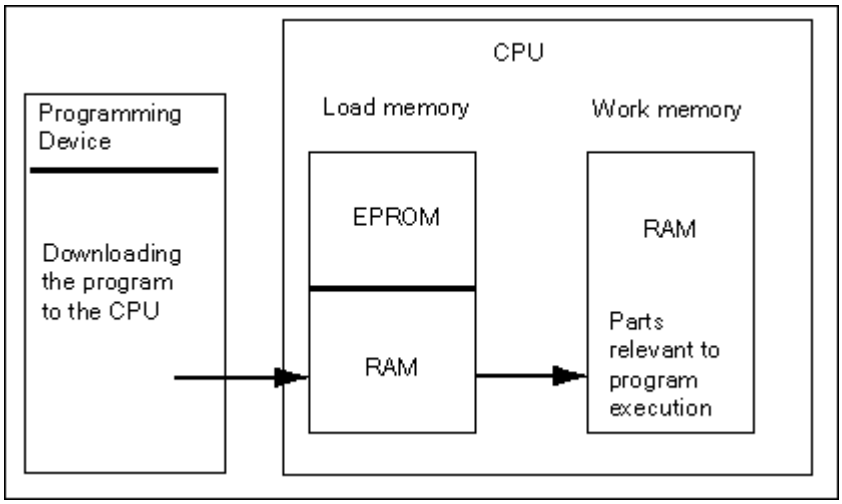

CPU Load Memory

- The load memory is used to store the user program without the symbol table and the comments (these remain in the memory of the programming device).
- Blocks that are not marked as required for startup will be stored only in the load memory.
- The load memory can either be RAM, ROM, or EPROM memory, depending on the programmable controller.
- The load memory can also have an integrated EEPROM part as well as an integrated RAM part (for example, CPU 312 IFM and CPU 314 IFM).
- In S7-400, it is imperative that you use a memory card (RAM or EEPROM) to extend the load memory.

CPU Work Memory

The work memory (integrated RAM) is used to store the parts of the user program required for program processing.

Possible Downloading/Uploading Procedures

- You use the download function to download the user program or loadable objects (for example, blocks) to the programmable controller. If a block already exists in the RAM of the CPU, you will be prompted to confirm whether or not the block should be overwritten.
- You can select the loadable objects in the project window and download them from the SIMATIC Manager (menu command: **PLC > Download**).
- When programming blocks and when configuring hardware and networks you can directly download the object you were currently editing using the menu in the main window of the application you are working with (menu command: **PLC > Download**).
- Another possibility is to open an online window with a view of the programmable controller (for example, using **View > Online** or **PLC > Display Accessible Nodes**) and copy the object you want to download to the online window.

Alternatively you can upload the current contents of blocks from the RAM load memory of the CPU to your programming device via the load function.

19.1.4 Download Methods Dependent on the Load Memory

The division of the load memory of a CPU into RAM and EEPROM areas determines the methods available for downloading your user program or the blocks in your user program. The following methods are possible for downloading data to the CPU:

Load Memory	Method of Loading	Type of Communication between PG and PLC
RAM	Downloading and deleting individual blocks	Online PG - PLC connection
	Downloading and deleting a complete user program	Online PG - PLC connection
	Reloading individual blocks	Online PG - PLC connection
Integrated (S7-300 only) or plug-in EPROM	Downloading complete user programs	Online PG - PLC connection
Plug-in EPROM	Downloading complete user programs	External loading of the EPROM and inserting the memory card or via online connection on the PLC where the EPROM is inserted.

Downloading to the RAM via Online Connection

In the programmable controller the data are lost if there is a power failure and the RAM is not backed up. The data in the RAM will then be lost in this case.

Saving to EPROM Memory Card

Blocks or the user program are saved on an EPROM memory card which is then inserted in a slot on the CPU.

Memory cards are portable data media. They are written by the programming device and then inserted in the appropriate slot on the CPU.

The data stored on them are retained following power down and when the CPU is reset. The contents of the EPROM are copied to the RAM area of the CPU memory again when power returns following a memory reset of the CPU and power down if the RAM is not backed up.

Saving in the Integrated EPROM

For the CPU 312, you can also save the contents of the RAM to the integrated EPROM. The data in the integrated EPROM are retained during power down. The contents of the integrated EPROM are copied to the RAM area of the CPU memory again when power returns following power down and a memory reset of the CPU if the RAM is not backed up.

19.1.5 Updating Firmware in Modules and Submodules Online

As of STEP 7 V5.1 Service Pack 3, you can update modules or submodules on a station in a standardized way online. To do so, proceed as described below:

Concept

To update the firmware on a module (CPU, IM, etc.) or a submodule (DI, DO, etc.), you can download the files (*.UPD) containing the latest firmware on the Internet ("http://www.siemens.com/automation/support").

Select one of these files and download it to the module (PLC Menu).

Prerequisites

The module in the station or module whose firmware is to be updated must be available online. This means that the programming device (PG) is connected to the same MPI PROFIBUS or Ethernet as the module whose firmware is to be updated. The firmware can also be updated when the programming device (PG) is connected to the MPI interface of the DP master CPU and the module whose firmware is to be updated is connected at the PROFIBUS of the DP interface or the Ethernet of the PN interface. The CPU must support S7 routing between the MPI interface and the DP interface or between the MPI interface and the PN interface.

The module or submodule itself must support Firmware updates. PROFINET GSD devices (GSDML devices) only support firmware updates via "Show accessible devices".

The files containing the latest firmware versions must be available in the file system on your PG/PC. Only files for **one** firmware version must be in one folder.

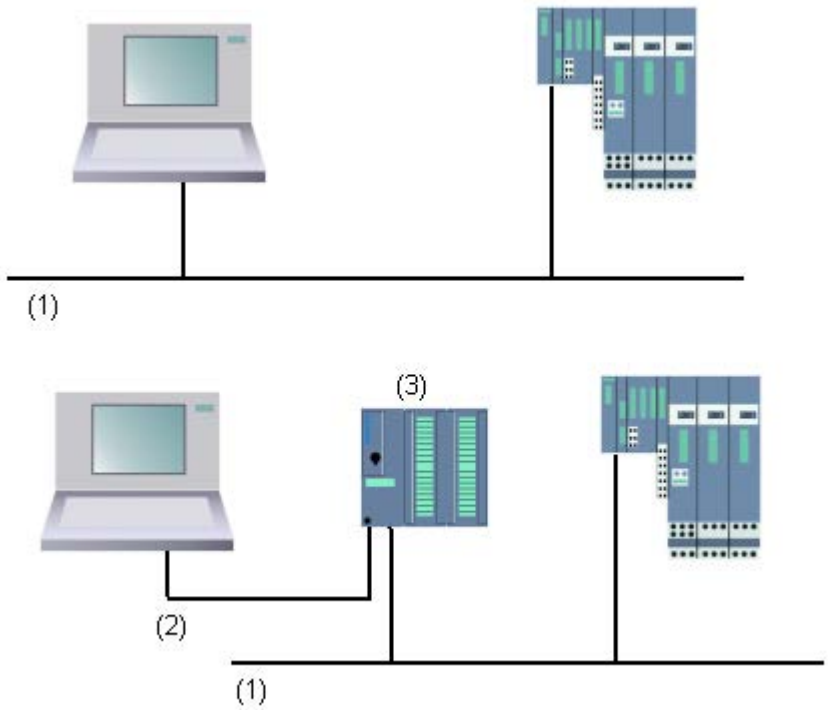

(1) PROFIBUS or Ethernet subnet

(2) MPI subnet

(3) CPU with MPI interface and DP interface or PN interface (with S7 routing)

Procedure in HW Config

1. Open the station containing the module to be updated.
2. Select the module
   For PROFIBUS DP interface modules such as an IM 151, select the icon for the DP slave. In this case, it is the one that stands for ET 200S.
3. Follow the same procedure for PROFINET IO devices.
   If you want to update the firmware of modules of a DP slave or IO device, click the "Change Slot" button and select the slot of the module you want to update in the "Change Slot" dialog.
4. Select the menu command **PLC > Update Firmware**.
   You can only activate the menu command if the selected module / DP slave / IO device or the selected submodule supports the "Update firmware" function.
5. In the "Update firmware" dialog that is displayed, click the "Browse" button and select the path to the firmware update files (*.UPD).
6. After you have selected a file, the lower fields of the "Update firmware" dialog will contain information telling you for which modules the file is suitable and as of which firmware version.
7. Click the "Run" button.
   STEP 7 checks whether the selected file can be interpreted by the module. If the check result is positive, the file is downloaded to the module.
   If the operating mode of the CPU needs to be changed, dialogs will prompt you to carry out these steps.
   The module then carries out the firmware update independently.
   Note: For a firmware update, such as to a CPU 317-2 PN/DP, a separate connection is usually established to the CPU. In such case, the process can be interrupted. If no resources are available for another connection, the existing connection is automatically used instead. In this case, the connection cannot be interrupted. The "Cancel" button in the transfer dialog is grayed out and unavailable.
8. In STEP 7, check (read out the CPU diagnostic buffer) whether the module was able to start up with the new firmware.

Procedure in SIMATIC Manager

The procedure corresponds to that in HW Config. The menu command also is PLC > Firmware update. STEP 7 however only checks if the module supports the function at the time of the execution.

Firmware Update for Modules in Redundant Mode

As of STEP 7 V5.4, a firmware updates for a modules during redundant mode is supported, such as for the IM 153-2BA00 with an active backplane bus at an H station. You can carry out a firmware update for the redundant IMs in one process; the redundant IM will automatically be provided with the latest firmware version.

Requirement: The programming device (PG) must be connected to the same PROFIBUS as one of the IMs and you perform the update by means of "Accessible Nodes" in the SIMATIC Manager.

Principle

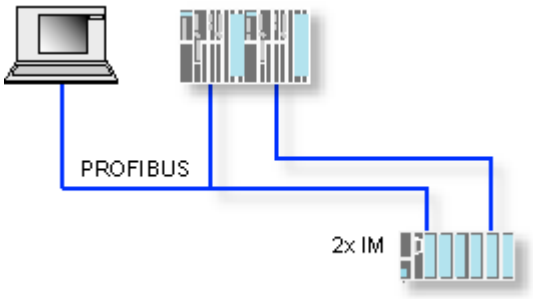

Consequences of updating the firmware during operation

You can decide to activate the new firmware immediately after updating via an option in the update dialog.

If you select this option, the station performs a restart like after POWER OFF/POWER ON. As result, it may happen that a CPU remains in STOP mode or the processing of the user program is adversely affected. You will need to take appropriate precautions in the operation of your plant to anticipate and accommodate these conditions.

For example, during a restart all modules of the station will fail, including the existing F I/O.

The F I/O outputs a communication error to the interface during POWER OFF and switches off safely - it is passivated. This passivation is not cleared by restarting the interface. You must depassivate the modules individually. However, the safety-related applications will not run as a result of this.

Updating the firmware fir CPUs 410 as of V8.2

With these CPUs, you have the option to update the firmware in one or more steps. This has the advantage that longer standstill times are minimized. The "Activate firmware after download" check box has been replaced by the following options:

If you select the option "Load and activate firmware version" the firmware is updated as decribed above.

If you select the option "Load firmware version only" the firmware is only downloaded. If the CPU is in "RUN", the firmware is downloaded to the first CPU and automatically copied to the second CPU. The copy operation is not performed in "STOP" mode.

If you select the option "Activate the loaded firmware" the firmware is activated on the module.

19.1.6 Downloading a Program to the S7 CPU

19.1.6.1 Downloading with Project Management

1. In the project window, select the user program or the blocks you want to download.
2. Download the selected objects to the programmable logic controller by selecting the menu command **PLC > Download**.

Alternative Procedure (Drag & Drop)

1. Open an offline window and an online window of your project.
2. Select the objects you want to download in the offline window and drag them to the online window.

19.1.6.2 Downloading without Project Management

1. Open the "Accessible Nodes" window using the menu command **PLC > Display Accessible Nodes** or by clicking the corresponding button in the toolbar.
2. Double-click in the "Accessible Nodes" window on the required node ("MPI=...") to display the "Blocks" folder.
3. Open the library or the project from which you want to download the user program or blocks to the programmable logic controller. Use the menu command **File > Open** for this.
4. In the window which opens for the project or the library, select the objects you want to download.
5. Download the objects to the programmable logic controller by copying them to the "Blocks" folder in the "Accessible Nodes" window using drag & drop.

19.1.6.3 Reloading Blocks in the Programmable Controller

You can overwrite blocks which already exist in the load memory (RAM) or work memory of the CPU in the S7 programmable logic controller with a new version (reload them). The existing version is then overwritten.

The procedure for reloading S7 blocks is the same as for downloading. A prompt simply appears, querying whether you want to overwrite the existing block.

A block stored in the EPROM cannot be deleted but is declared invalid once it is reloaded. The replacement block is loaded in the RAM. This creates gaps in the load memory or the work memory. If these gaps eventually mean that no new blocks can be downloaded, you should compress the memory.

Note

If the power goes down and then returns and the RAM does not have a battery backup, or following a memory reset of the CPU the "old" blocks become valid again.

19.1.6.4 Saving Downloaded Blocks on Integrated EPROM

For CPUs that have an integrated EPROM (such as CPU 312), you can save blocks from the RAM to the integrated EPROM so as not to lose the data following power off or memory reset.

1. Use the menu command **View > Online** to display a window containing the online view of an open project or open the "Accessible Nodes" window by clicking the "Accessible Nodes" button in the toolbar or selecting the menu command **PLC > Display Accessible Nodes**.
2. Select the S7 program in the online window of the project or the node in the "Accessible Nodes" window.
3. Select the "Blocks" folder on the CPU which you want to save using one of the following methods:
   - In the online window of the project if you are working with project management
   - In the "Accessible Nodes" window if you are working without project management
4. Select the menu command **PLC > Save RAM to ROM**.

19.1.6.5 Downloading via EPROM Memory Cards

Requirements

For access to EPROM memory cards in the programming device which are intended for an S7 programmable logic controller, you will require the appropriate EPROM drivers. EPROM drivers are offered as options when you install the STEP 7 Standard package. If you are using a PC, an external prommer will be required to save to EPROM memory cards.

You can also install the drivers at a later date. To do this, call up the corresponding dialog box via **Start > Simatic > STEP 7 > Memory Card Parameter Assignment** or via the Control Panel (double-click the "Memory Card Parameter Assignment" icon).

Saving on the Memory Card

To save blocks or user programs to a memory card, proceed as follows:

1. Insert the memory card in the slot of your programming device.
2. Open the "Memory Card" window by:
   - Clicking the button for "Memory Card" in the toolbar. If necessary, activate the toolbar using the menu command **View > Toolbar**.
   - Alternatively, select the menu command **File > S7 Memory Card > Open**.
3. Open or activate one of the following windows displaying the blocks you want to save: The following windows are possible:
   - Project window, "ONLINE" view
   - Project window, "offline" view
   - Library window
   - "Accessible Nodes" window
4. Select the "Blocks" folder or individual blocks and copy them to the "S7 Memory Card" window.
5. If a block already exists on the memory card, an error message is displayed. In this case, erase the contents of the memory card and repeat the steps from 2.

19.2 Compiling and Downloading Several Objects from the PG

19.2.1 Requirements for and Notes on Downloading

Downloading Block Folders

For block folders, only logic blocks can be downloaded. Other objects in the block folder, such as system data (SDBs), etc. cannot be downloaded here. SDBs are downloaded through the "Hardware" object.

Note

For PCS 7 projects, blocks cannot be downloaded using the dialog "Compile and Download Objects"- just as they cannot be downloaded from the SIMATIC Manager. For PCS 7 projects, the following applies: PLCs must only be downloaded to by means of CFCs in order to ensure correct sequencing during the download. This must be done to prevent the CPU from going into STOP mode.

To determine whether the given project is a PCS 7 project, check the project properties.

Downloading the F-Shares of Failsafe Controllers

For security reasons, a password must be entered before modified F-shares can be downloaded. For this reason, with the "Compile and Download Objects" function, the download procedure will be aborted with an error message. In this case, load the appropriate parts of the program along with the optional package to the PLC.

Downloading the Hardware Configuration

Downloading the hardware configuration (i.e. downloading the offline SDBs) by means of the "Compile and Download Objects" function will only run without interruption for all selected objects if no error messages or prompts are triggered. The following section provides information on how to avoid such messages or prompts.

Requirements for Downloading the Hardware Configuration

- CPUs must be in STOP mode.
- It must be possible to establish online connections to the CPUs. In the case of the selected CPU or the selected block folder, password-projected CPUs require an authorized connection or entry of a password ("Edit" button) before the "Compile and Download Objects" function can be run.
- When loading the configuration from "Compile and download objects", please note that no user input is possible during the entire process. If a connection is to take place via the TCP/IP interface and the setting "Use different method to obtain IP address" is set, the download will only be successful if the affected CPU has a valid access address. You assign the access address in SIMATIC manager. To do this, select the program folder and call the menu item "PLC/Access address".

- The interface of the target system that is being used for downloading must not be reconfigured to any substantial extent:
  - The interface address must not be changed.
  - If you change the network settings, this may mean that not all the modules will be able to be accessed.
- In the case of H-CPUs, you can select the CPU to receive the download (H-CPU 0 or H-CPU 1) before running the "Compile and Download Objects" function (Select the "CPU" object and then click the "Edit" button).
- The following CPU parameters must not be changed:
  - The maximum size for local data and communications resources on the CPU ("Memory" tab)
  - The password protection for the F-CPU ("Protection" tab)
- For each configured module, the following conditions must be fulfilled:
  - The order number for the configured module must be identical with the order number of the module that is actually inserted.
  - The firmware version of the configured module must not be higher than the firmware version of the module that is actually inserted.
  - The station name, the name of the module and the plant designation must not have changed since the last download. However, you can assign a new plant designation.

Tips on the Download Procedure

- All offline SDBs will be downloaded (that is, in addition to the hardware configuration, also the connection SDBs and SDBs that were created through global data configurations).
- Downloading is only carried out if no errors occurred during the previous compilation process.
- During the download, any error feedback messages are suppressed. For example, if a CPU memory bottleneck occurs, the data will be compressed automatically without the user being informed.
- After the download is complete, the downloaded modules will be in STOP mode (except for those modules that are automatically stopped and restarted without the user being informed).

Tip

If, after the download is completed, a message appears stating that the download of the object was completed with warnings, then be sure to view the contents of the log. It may be that the object was either not downloaded or was not downloaded completely.

19.2.2 Compiling and Downloading Objects

In the "Compile and download objects" dialog you prepare the objects that can be selected in your project or multiproject for transfer to the PLC and their subsequent download (if desired). This dialog can be used for objects in a station, a project or a multiproject.

Depending on the object selected, certain information may not be displayed. In addition, not all the functions described below may be available for these objects. In particular, these restrictions may apply to objects that were created with optional software packages.

For blocks in a block folder "compile" means that the consistency of the blocks is checked. In the following, for simplicity, the consistency check for blocks will be referred to as compilation.

Procedure:

1. In SIMATIC Manager, select the object that you want to compile, or compile and download. The following objects can be selected in the SIMATIC Manager:
   - Multiproject
   - Project
   - Station
   - S7 program without station assignment
2. In the SIMATIC Manager, select menu command **PLC > Compile And Download Objects**.
3. Select "Only compile" if you want to perform a check of the blocks without downloading them to the PLC. Select this option if you do not want to download any of these objects to the PLC. **Note:** Stations with missing HSPs are not compiled and loaded (the check boxes are not visisble).
4. To prevent incomplete downloads to stations due to compilation errors, select the check box "No download on compilation error". If this check box is selected, nothing will be downloaded. If the check box is not selected, then all objects compiled without error are downloaded. Objects that caused an error during compilation are not downloaded.
5. If you want to compile and download connections, select the corresponding check box for the "Connections" object.

   A multiproject is particularly suited for use as a starting point, since all connection partners for cross-project connections can also be downloaded from this object.
6. In the "Compile" and "Download" columns, select the objects that you want to compile or download. You selections will be indicated by checkmarks. If you selected "Compile only" in Step 3, the "Download" column will be grayed out and unavailable.
7. Click on "Start" to begin the compilation.
8. Follow the instructions on the screen.

After the compilation or download is complete, a full log is displayed. You can open the full log or single-object log at any time:

- Click on the "All" button to view the full log of the complete action.
- Click on "Single object" button to view only the log of the object you have selected in the object table.

Special considerations when compiling and downloading connections

If, in a module, you select the "Connections" object as the one to be **compiled**, then STEP 7 automatically selects the corresponding "Connections" object in the connection partner. By doing this, STEP 7 always creates consistent configuration data (system data blocks). The automatically selected objects cannot be directly deselected manually. However, the selection is automatically removed if the originally selected "Connections" object is also deselected.

If, in a module, you select the "Connections" object as the one to be **downloaded**, then STEP 7 automatically selects the "Compile" check box. In addition, STEP 7 also selects the "Compile" and "Download" check boxes for all connection partners. If only objects of the "Connections" type were selected, you can also download the connections when the CPU is in RUN-P operating mode.

You can use NetPro to download individual connections.

Compiling and downloading hardware: effects on connections

If you select the "Hardware" object as the one to be compiled or downloaded, all "Connections" objects below the hardware selected are also automatically selected to be compiled or downloaded. In this case, however, the connection objects at the connections partners are **not** automatically selected as well!

19.3 Uploading from the Programmable Controller to the PG/PC

This function supports you when carrying out the following actions:

- Saving information from the programmable controller (for example, for servicing purposes)
- Fast configuring and editing of a station, if the hardware components are available before you start configuring.

Saving Information from the Programmable Controller

This measure may be necessary if, for example, the offline project data of the version running on the CPU are not, or only partially, available. In this case, you can at least retrieve the project data that are available online and upload them to your programming device.

Fast Configuring

Entering the station configuration is easier if you upload the configuration data from the programmable controller to your programming device after you have configured the hardware and restarted (warm restart) the station. This provides you with the station configuration and the types of the individual modules. Then all you have to do is specify these modules in more detail (order number) and assign them parameters.

The following information is uploaded to the programming device:

- S7-300: Configuration for the central rack and any expansion racks
- S7-400: Configuration of the central rack with a CPU and signal modules without expansion racks
- Configuration data for the distributed I/O cannot be uploaded to the programming device.

This information is uploaded if there is no configuration information on the programmable controller; for example, if a memory reset has been carried out on the system. Otherwise, the **Upload** function provides much better results.

For S7-300 systems without distributed I/O, all you have to do is specify these modules in more detail (order number) and assign them parameters.

Note

When you upload data (if you do not already have an offline configuration), STEP 7 cannot determine all the order numbers of the components.

You can enter the "incomplete" order numbers when you configure the hardware using the menu command **Options > Specify Module**. In this way, you can assign parameters to modules that STEP 7 does not recognize (that is, modules that do not appear in the "Hardware Catalog" window); however, STEP 7 will not then check whether you are keeping to the parameter rules.

Restrictions when Uploading from the Programmable Controller

The following restrictions apply to the data uploaded from the programmable controller to the programming device:

- Blocks do not contain any symbolic names for parameters, variables, and labels
- Blocks do not contain any comments
- The entire program is uploaded with all the system data, whereby the system can only continue to process the system data belonging to the "Configuring Hardware" application
- The data for global data communication (GD) and configuring symbol-related messages cannot be processed further
- Force jobs are not uploaded to the programming device with the other data. They must be saved separately as a variable table (VAT)
- Comments in the module dialog boxes are not uploaded
- The names of the modules are only displayed if this option has been selected during configuration (HW Config: the option "Save object names in the programmable logic controller" in the dialog box under **Options > Customize**).

19.3.1 Uploading a Station

Using the menu command **PLC > Upload Station** you can upload the current configuration and all blocks from the programmable controller of your choice to the programming device.

To do this, STEP 7 creates a new station in the current project under which the configuration will be saved. You can change the preset name of the new station (for example, "SIMATIC 300-Station(1)"). The inserted station is displayed both in the online view and in the offline view.

The menu command can be selected when a project is open. Selecting an object in the project window or the view (online or offline) has no effect on the menu command.

You can use this function to make configuring easier.

- For S7-300 programmable controllers, the configuration for the actual hardware configuration is uploaded including the expansion racks, but without the distributed I/O (DP).
- For S7-400 programmable controllers, the rack configuration is uploaded without the expansion racks and without the distributed I/O.

With S7-300 systems without distributed I/O, all you have to do is specify the modules in more detail (order number) and assign them parameters.

Restrictions when Uploading Stations

The following restrictions apply to the data uploaded to the programming device:

- Blocks do not contain any symbolic names for parameters, variables, and labels
- Block do not contain any comments
- The entire program is uploaded with all the system data, whereby not all the data can be processed further
- The data for global data communication (GD), configuring symbol-related messages, and configuring networks cannot be processed further
- Force jobs cannot be uploaded to the programming device and then loaded back to the programmable controller.

19.3.2 Uploading Blocks from an S7 CPU

You can upload S7 blocks from the CPU to the hard disk of the programming device using the SIMATIC Manager. Uploading blocks to the programming device is useful in the following situations:

- Making a backup copy of the current user program loaded in the CPU. This backup can then be downloaded again, for example, following servicing or following a memory reset of the CPU by maintenance personnel.
- You can upload the user program from the CPU to the programming device and edit it there, for example, for troubleshooting purposes. In this case you do not have access to symbols or comments for program documentation. Therefore we recommend that this procedure is used only for service purposes.

19.3.3 Editing Uploaded Blocks in the PG/PC

Being able to upload blocks from the CPU to the programming device has the following uses:

- During the test phase, you can correct a block directly on the CPU and document the result.
- You can upload the current contents of blocks from the RAM load memory of the CPU to your programming device via the load function.

Note

Time stamp Conflicts when Working Online and Offline

The following procedures lead to time stamp conflicts and should therefore be avoided.

Time stamp conflicts result when you open a block online if:

- Changes made online were not saved in the offline S7 user program
- Changes made offline were not downloaded to the CPU

Time stamp conflicts result when you open a block offline if:

- An online block with a time stamp conflict is copied to the S7 user program offline and the block is then opened offline.

Two Distinct Cases

When uploading blocks from the CPU to the programming device, remember that there are two distinct situations:

1. The user program to which the blocks belong is located on the programming device.
2. The user program to which the blocks belong is not on the programming device.

This means that the program sections listed below, that cannot be downloaded to the CPU, are not available. These components are:

- The symbol table with the symbolic names of the addresses and the comments
- Network comments of a Ladder Logic or Function Block Diagram program
- Line comments of a Statement List program
- User-defined data types

19.3.3.1 Editing Uploaded Blocks if the User Program is on the PG/PC

To edit blocks from the CPU, proceed as follows:

1. Open the online window of the project in the SIMATIC Manager.
2. Select a "Blocks" folder in the online window. The list of loaded blocks is displayed.
3. Now select the blocks, open and edit them.
4. Select the menu command **File > Save** to save the change offline on the programming device.
5. Select the menu command **PLC > Download** to download the changed blocks to the programmable controller.

19.3.3.2 Editing Uploaded Blocks if the User Program is Not on the PG/PC

To edit blocks from the CPU, proceed as follows:

1. In the SIMATIC Manager, click the "Accessible Nodes" toolbar button or select the menu command **PLC > Display Accessible Nodes**.
2. Select the node ("MPI=..." object) from the list displayed and open the "Blocks" folder to display the blocks.
3. You can now open blocks and edit, monitor, or copy them as required.
4. Select the menu command **File > Save As** and enter the path for the programming device where you want to store the blocks in the dialog box.
5. Select the menu command **PLC > Download** to download the changed blocks to the programmable controller.

19.4 Deleting on the Programmable Controller

19.4.1 Erasing the Load/Work Memory and Resetting the CPU

Before downloading your user program to the S7 programmable controller, you should perform a memory reset on the CPU to ensure that no "old" blocks are still on the CPU.

Requirement for Memory Reset

The CPU must be in STOP mode to perform a memory reset (mode selector set to STOP, or to RUN-P and change the mode to STOP using the menu command **PLC > Diagnostics/Settings > Operating Mode**).

Performing a Memory Reset on an S7 CPU

When a memory reset is performed on an S7 CPU, the following happens:

- The CPU is reset.
- All user data are deleted (blocks and system data blocks (SDB) with the exception of the MPI parameters).
- The CPU interrupts all existing connections.
- If data are present on an EPROM (memory card or integrated EPROM), the CPU copies the EPROM contents back to the RAM area of the memory following the memory reset.

The contents of the diagnostic buffer and the MPI parameters are retained.

19.4.2 Deleting S7 Blocks on the Programmable Controller

Deleting individual blocks on the CPU may be necessary during the test phase of the CPU program. Blocks are stored in the user memory of the CPU either in the EPROM or RAM (depending on the CPU and the load procedure).

- Blocks in the RAM can be deleted directly. The occupied space in the load or work memory becomes free and can be used again.
- Blocks in the integrated EPROM are always copied to the RAM area following a memory reset of the CPU. The copies in the RAM can be deleted directly. The deleted blocks are then marked in the EPROM as invalid until the next memory reset or power down without RAM backup. Following a memory reset or power down without RAM backup, the "deleted" blocks are copied from the EPROM to the RAM and become active. Blocks in the integrated EPROM (for example, in the CPU 312) are deleted by overwriting them with the new RAM contents.
- EPROM memory cards must be erased in the programming device.

19.5 Compressing the User Memory (RAM)

19.5.1 Gaps in the User Memory (RAM)

After deleting and reloading blocks, gaps can occur in the user memory (load and work memory) and reduce the usable memory area. With the compress function, the existing blocks are rearranged in the user memory without gaps, and a continuous free memory is created.

The following figure shows a diagram of how occupied blocks of memory are shifted together by the compress function.

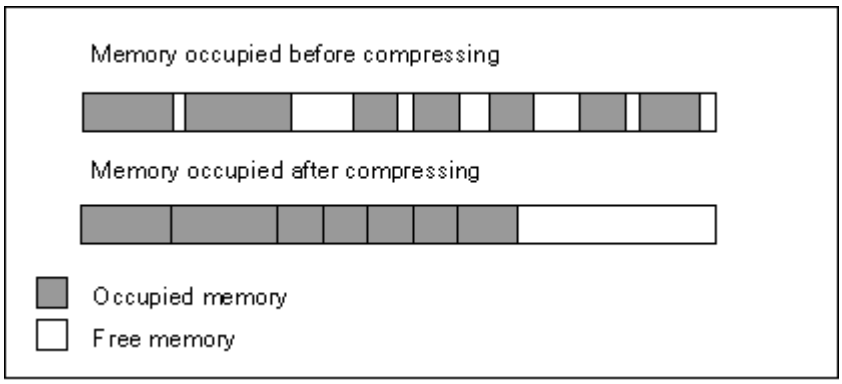

Always Try to Compress the Memory in STOP Mode

Only if you compress the memory in "STOP" mode are all the gaps closed up. In the RUN-P mode (mode selector setting), the blocks currently being processed cannot be shifted since they are open. The compress function does not work in the RUN mode (mode selector setting) (write protection!).

19.5.2 Compressing the Memory Contents of an S7 CPU

Ways of Compressing the Memory

There are two methods of compressing the user memory, as follows:

- If there is insufficient memory available when you are downloading to the programmable controller, a dialog box appears informing you of the error. You can compress the memory by clicking the corresponding button in the dialog box.
- As a preventative measure, you can display the memory utilization (menu command **PLC > Diagnostics/Setting > Module Information**, "Memory" tab) and start the compressing function if required.

Procedure

1. Select the S7 program in the "Accessible Nodes" window or the online view of the project.
2. Select the menu command PLC > Diagnostics/Setting > Module Information.
3. In the dialog box which then appears, select the "Memory" tab. In this tabbed page there is a button for compressing the memory if the CPU supports this function.

20 Testing with the Variable Table

20.1 Introduction to Testing with Variable Tables

Variable tables offer the advantage of being able to store various test environments. Thus, tests and monitoring can be effortlessly reproduced during operation or for the purpose of service and maintenance. There is no limit to the number of variable tables that can be stored.

When testing using variable tables, the following functions are available:

- **Monitoring Variables**
  This function enables you to display on the programming device/PC the current values of individual variables in a user program or a CPU.
- **Modifying Variables**
  You can use this function to assign fixed values to individual variables of a user program or a CPU. Modifying values once and immediately is also possible when testing using program status.
- **Enable Peripheral Output and Activate Modify Values**
  These two functions allow you to assign fixed values to individual I/O outputs of a CPU in STOP mode.
- **Forcing Variables**
  You can use this function to assign individual variables of a user program or a CPU with a fixed value that cannot be overwritten by the user program.

You can assign or display the values for the following variables:

- Inputs, outputs, bit memory, timers, and counters
- Contents of data blocks
- I/O (periphery)

You enter the variables you want to display or modify in variable tables.

You can determine when and how often the variables are monitored or assigned new values by defining a trigger point and trigger frequency.

20.2 Basic Procedure when Monitoring and Modifying with the Variable Table

To use the **Monitor** and **Modify** functions, proceed as follows:

1. Create a new variable table or open an existing variable table.
2. Edit or check the contents of the variable table.
3. Establish an online connection between the current variable table and the required CPU using the menu command **PLC > Connect To.**
4. Using the menu command **Variable > Trigger**, select a suitable trigger point and set the trigger frequency.
5. The menu commands **Variable > Monitor** and **Variable > Modify** toggle the Monitor and Modify functions on and off.
6. Save the completed variable table using the menu command **Table > Save** or **Table > Save As**, so that you can call it up again at any time.

20.3 Editing and Saving Variable Tables

20.3.1 Creating and Opening a Variable Table

Before you can monitor or modify variables, you must create a variable table (VAT) and enter the required variables. To create a variable table, you can choose from one of the following methods:

In the SIMATIC Manager:

- Select the "Blocks" folder and the menu command **Insert > S7 Block > Variable Table**. In the dialog box, you can give the table a name ("Symbolic Name" text box). You can open the variable table by double-clicking the object.
- Select a connection or, in the online view, an S7 program from the list of accessible nodes. You create an unnamed variable table using the menu command **PLC > Monitor/Modify Variables**.

In "Monitor/Modify Variables":

- You can use the menu command **Table > New** to create a new variable table which is not yet assigned to any S7 program. You can open existing tables with **Table > Open**.
- You can use the corresponding symbols in the toolbar to create or open variable tables.

Once you have created a variable table, you can save it, print it out, and use it again and again for monitoring and modifying.

20.3.1.1 How to Create and Open a Variable Table

Alternative 1 in the SIMATIC Manager

1. Select the offline project view.
2. Open the block folder in which you want to save the variable table.
3. Select the menu command Insert > S7 Block > Variable Table.
4. In the dialog box, specify the name of the variable table.
5. You can open the variable table by double-clicking the object.

Alternative 2 in the SIMATIC Manager

1. In an online window (online view of the project or "Accessible Nodes"), select the menu command **PLC > Monitor/Modify Variables**. The "Monitoring and Modifying Variables" window is opened.

Alternative 3 in "Monitor/Modify Variables"

1. Create a new variable table using the menu command **Table > New** in the window displayed.

20.3.2 Copying/Moving Variable Tables

You can copy or move variable tables in block folders of an S7 program.

Note the following when copying or moving variable tables:

- Existing symbols in the symbol table of the target program will be updated.
- When you move a variable table, the corresponding symbols from the symbol table of the source program will also be moved to the symbol table of the target program.
- When you delete variable tables from the block folder, the corresponding symbols from the symbol table of the S7 program will also be deleted.
- If the target program already contains a variable table with the same name, the next-highest free number will be assigned when you copy the variable table.
- If the target program already contains a variable table with the same name, you can rename the variable table when copying (as a default a number is attached to the existing name).

Note

When copying/moving variable tables, remember that the symbolic name is the main criterion, in other words, the number is assigned automatically.

Example 1: You want to copy or move the variable table with the symbolic name "OTTO" and the (unchangeable) name "VAT1" to another project that also has a variable table with the symbolic name "OTTO". You will be asked whether you want to overwrite the existing variable table or assign a new name. If you assign a new (symbolic) name, the unchangeable name of the new variable table is adapted.

Example 2: You want to copy or move the variable table with the symbolic name "OTTO" and the (unchangeable) name "VAT1" to another project that does not have a variable table with the symbolic name "OTTO". When you insert the new variable table, the unchangeable name of the new variable table is adapted.

20.3.3 Saving a Variable Table

You can use saved variable tables to monitor and modify variables when you test a program again.

1. Save the variable table using the menu command **Table > Save.**
2. If the variable table has been created, you must now give the variable table a name, for example, "ProgramTest_1."

When you save a variable table, all the current settings and the table format are saved. This means that the settings made under the menu item "Trigger" are saved.

20.4 Entering Variables in Variable Table

20.4.1 Inserting Addresses or Symbols in a Variable Table

Select the variables whose values you want to modify or monitor and enter them in the variable table. Start from the "outside" and work "inwards"; this means you should first select the inputs and then the variables that are influenced by the inputs and which influence the outputs, and finally the outputs.

If you want, for example, to monitor the input bit 1.0, the memory word 5, and the output byte 0, enter the following in the "Address" column:
Example:

I 1.0
MW5
QB0

Example of a Completed Variable Table

The following figure shows a variable table with the following visible columns: Address, Symbol, Display Format, Monitor Value, and Modify Value

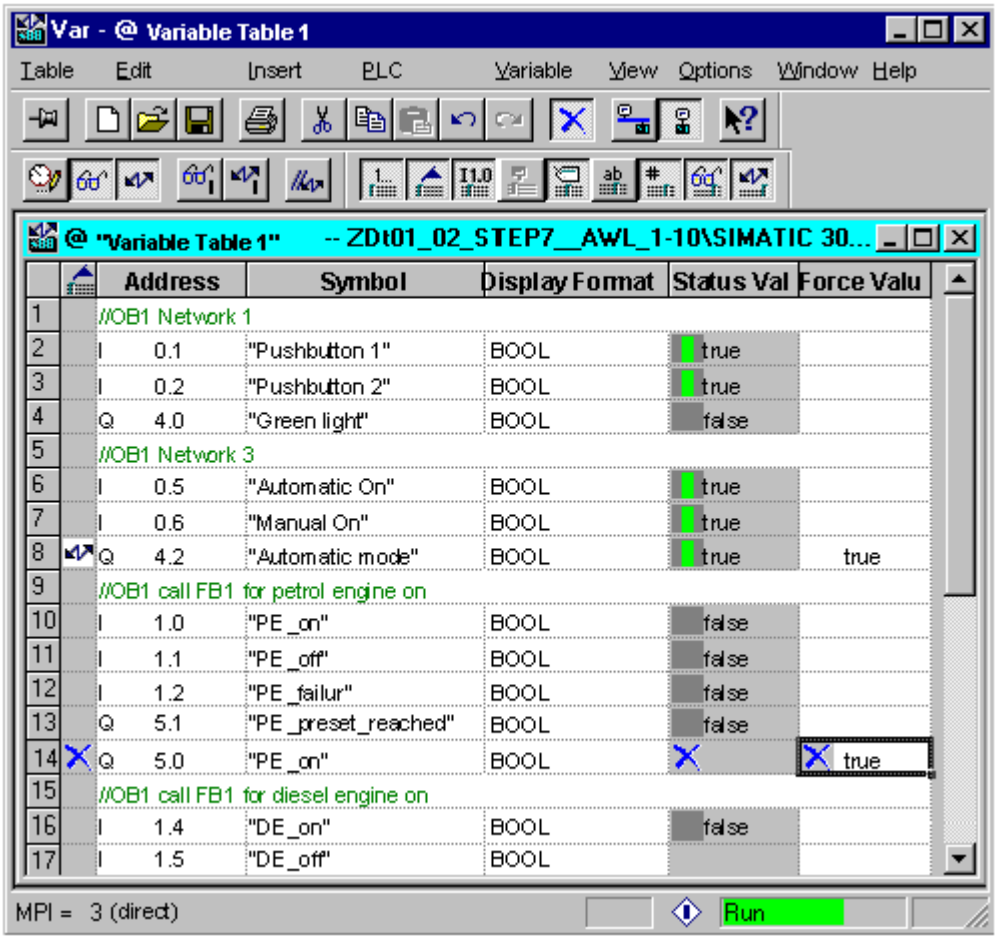

Notes on Inserting Symbols

- You enter the variable you want to modify with your address or as a symbol. You can enter symbols and addresses either in the "Symbol" column or in the "Address" column. The entry is then written automatically in the correct column.
  If the corresponding symbol is defined in the symbol table, the symbol column or the address column is filled out automatically.
- You can enter only those symbols that are already defined in the symbol table.
- You must enter a symbol exactly as it is defined in the symbol table.
- Symbol names that contain special characters must be enclosed in quotation marks (for example, "Motor.Off," "Motor+Off," "Motor-Off").
- To define new symbols in the symbol table select the menu command **Options > Symbol Table**. Symbol can also be copied from the symbol table and pasted in a variable table.

Syntax Check

When you enter variables in the variable table, a syntax check is carried out at the end of each line. Any incorrect entries are marked in red.

If you position the cursor in a row marked in red, brief information is displayed telling you the cause of the error. Notes on correcting the error can be obtained by pressing F1.

Note

If you prefer to edit the variable table with the keyboard (without the mouse), you should keep the "Brief Information When Using the Keyboard" feature enabled.

If necessary, you can change the setting in the variable table by selecting the menu command **Option > Customize** and then selecting the "General" tab.

Maximum Size

A maximum of 255 characters per line are permitted in a variable table. A carriage return into the next row is not possible. A variable table can have up to a maximum of 1024 rows. This is then its maximum size.

20.4.2 Inserting a Contiguous Address Range in a Variable Table

1. Open a variable table.
2. Position the cursor in the row after which you want the range of contiguous addresses to be inserted.
3. Select the menu command **Insert > Range of Variables**. The "Insert Range of Variables" dialog box appears.
4. Enter an address as the start address in the "From Address" field.
5. Enter the number of rows to be inserted in the "Number" field.
6. Select the required display format from the list displayed.
7. Click the "OK" button.

The range of variables is inserted in the variable table.

20.4.3 Inserting Modify Values

Modify Value as Comment

If you want to make the "modify value" of a variable ineffective, use the **Variable > Modify Value as Comment** menu command. A comment marker "//" before the value to be modified of a variable indicates that it is without effect. The command marker "//" can also be inserted in front of the "modify value" instead of the menu command call. The ineffectiveness of the "modify value" can be reversed by calling up the **Variable > Modify Value as Comment** menu command again or by removing the comment marker.

20.4.4 Upper Limits for Entering Timers

Note the following upper limits for entering timers:

Example: W#16#3999 (maximum value in BCD format)

Examples:

Address	Monitor Format	Enter	Modify Value Display	Explanation
T 1	SIMATIC_TIME	137	S5TIME#130MS	Conversion to milliseconds
MW4	SIMATIC_TIME	137	S5TIME#890MS	Representation in BCD format possible
MW4	HEX	137	W#16#0089	Representation in BCD format possible
MW6	HEX	157	W#16#009D	Representation in BCD format not possible, therefore the monitor format SIMATIC_TIME cannot be selected

Note

- You can enter timers in millisecond steps but the value entered is adapted to the time frame. The size of the time frame depends on the size of the time value entered (137 becomes 130 ms; the 7 ms were rounded down).
- The modify values for addresses of the data type WORD, for example, IW1, are converted to BCD format. Not every bit pattern is a valid BCD number, however. If the entry cannot be represented as SIMATIC_TIME for an address of the data type WORD, the application reverts automatically to the default format (here: HEX, see Select Monitor Format, Default Command (View Menu)) so that the value entered can be displayed.

BCD Format for Variables in the SIMATIC_TIME Format

Values of variables in the SIMATIC_TIME format are entered in BCD format.
The 16 bits have the following significance:

| 0 0 x x | h h h h | t t t t | u u u u |

Bits 15 and 14 are always zero.
Bits 13 and 12 (marked with xx) set the multiplier for bits 0 to 11:
00 => multiplier 10 milliseconds
01 => multiplier 100 milliseconds
10 => multiplier 1 second
11 => multiplier 10 seconds
Bits 11 to 8 hundreds (hhhh)
Bits 7 to 4 tens (tttt)
Bits 3 to 0 units (uuuu)

20.4.5 Upper Limits for Entering Counters

Note the following upper limits for entering counters:

Upper limit for counters: C#999
W#16#0999 (maximum value in BCD format)

Examples:

Address	Monitor Format	Enter	Modify Value Display	Explanation
C1	COUNTER	137	C#137	Conversion
MW4	COUNTER	137	C#89	Representation in BCD format possible
MW4	HEX	137	W#16#0089	Representation in BCD format possible
MW6	HEX	157	W#16#009D	Representation in BCD format not possible, therefore the monitor format COUNTER cannot be selected

Note

- If you enter a decimal number for a counter and do not mark the value with C#, this value is automatically converted to BCD format (137 becomes C#137).
- The modify values for addresses of the data type WORD, for example, IW1, are converted to BCD format. Not every bit pattern is a valid BCD number, however. If the entry cannot be represented as COUNTER for an address of the data type WORD, the application reverts automatically to the default format (here: HEX, see Select Monitor Format, Default Command (View Menu)) so that the value entered can be displayed.

20.4.6 Inserting Comment Lines

Comment lines are introduced by the comment marker "//".

If you want to make one or more lines of the variable table ineffective (as a comment line), use the **Edit > Row not Effective** menu command or the corresponding symbol in the toolbar.

20.4.7 Examples

20.4.7.1 Example of Entering Addresses in Variable Tables

Permitted Address:	Data Type:	Example (English Mnemonics):
Input | Output | Bit memory	BOOL	I 1.0 | Q 1.7 | M 10.1
Input | Output | Bit memory	BYTE	IB 1 | QB 10 | MB 100
Input | Output | Bit memory	WORD	IW 1 | QW 10 | MW 100
Input | Output | Bit memory	DWORD	ID 1 | QD 10 | MD 100
I/O (Input | Output)	BYTE	PIB 0 | PQB 1
I/O (Input | Output)	WORD	PIW 0 | PQW 1
I/O (Input | Output)	DWORD	PID 0 | PQD 1
Timers	TIMER	T 1
Counters	COUNTER	C 1
Data block	BOOL	DB1.DBX 1.0
Data block	BYTE	DB1.DBB 1
Data block	WORD	DB1.DBW 1
Data block	DWORD	DB1.DBD 1

Note

The entry "DB0. .." is not permitted because it is already used internally.

In the Force Values Window

- When forcing with S7-300 modules, only inputs, outputs, and I/O (outputs) are allowed.
- When forcing with S7-400 modules, only inputs, outputs, bit memory, and I/O (inputs/outputs) are allowed.

20.4.7.2 Example of Entering a Contiguous Address Range

Open a variable table and call up the "Insert Range of Variables" dialog box with the menu command **Insert > Range of Variables**.

For the dialog box entries the following lines for bit memory are inserted in the variable table:

- From address: M 3.0
- Number: 10
- Display format: BIN

Address	Display Format
M 3.0	BIN
M 3.1	BIN
M 3.2	BIN
M 3.3	BIN
M 3.4	BIN
M 3.5	BIN
M 3.6	BIN
M 3.7	BIN
M 4.0	BIN
M 4.1	BIN

Note that in this example the designation in the "Address" column changes after the eighth entry.

20.4.7.3 Examples of Entering Modify and Force Values

Bit Addresses

Possible bit addresses	Permitted modify/force values
I1.0	true
M1.7	false
Q10.7	0
DB1.DBX1.1	1
I1.1	2#0
M1.6	2#1

Byte Addresses

Possible byte addresses	Permitted modify/force values
IB 1	2#00110011
MB 12	b#16#1F
MB 14	1F
QB 10	'a'
DB1.DBB 1	10
PQB 2	-12

Word Addresses

Possible word addresses	Permitted modify/force values
IW 1	2#0011001100110011
MW12	w#16#ABCD
MW14	ABCD
QW 10	b#(12,34)
DB1.DBW 1	'ab'
PQW 2	-12345
MW3	12345
MW5	s5t#12s340ms
MW7	0.3s or 0,3s
MW9	c#123
MW11	d#1990-12-31

Double Word Addresses

Possible double word addresses	Permitted modify/force values
ID 1	2#00110011001100110011001100110011
MD 0	23e4
MD 4	2
QD 10	dw#16#abcdef10
QD 12	ABCDEF10
DB1.DBD 1	b#(12,34,56,78)
PQD 2	'abcd'
MD 8	l# -12
MD 12	l#12
MD 16	-123456789
MD 20	123456789
MD 24	t#12s345ms
MD 28	tod#1:2:34.567
MD 32	p#e0.0

Timers

Possible addresses of the type "Timer"	Permitted modify/force values	Explanation
T 1	0	Conversion to milliseconds (ms)
T 12	20	Conversion to ms
T 14	12345	Conversion to ms
T 16	s5t#12s340ms	
T 18	3	Conversion to 1s 300 ms
T 20	3s	Conversion to 1s 300 ms

Modifying a timer affects only the value, not the state. This means that the timer T1 can be modified to the value 0, without the result of logic operation for A T1 being changed.

The strings 5t, s5time can be written in either upper or lower case.

Counters

Possible addresses of the type "Counter"	Permitted modify/force values
C 1	0
C 14	20
C 16	c#123

Modifying a counter only affects the value, not the state. This means that Counter C1 can be modified to the value 0 without the result of logic operation for A C1 being changed.

20.5 Establishing a Connection to the CPU

In order to be able to monitor or modify the variables you entered in your current variable table (VAT), you must establish a connection to the appropriate CPU. It is possible to link each variable table with a different CPU.

Displaying an Online Connection

If an online connection exists, the term "ONLINE" in the title bar of the variable table window indicates this fact. The status bar displays the operating states "RUN", "STOP", "DISCONNECTED" or "CONNECTED", depending on the CPU.

Establishing an Online Connection to the CPU

If an online connection to the required CPU does not exist, use the menu command **PLC > Connect To > ...** to define a connection to the required CPU so that variables can be monitored or modified.

Interrupting the Online Connection to the CPU

Using the menu command **PLC > Disconnect** you interrupt the connection between the variable table and the CPU.

Note

If you created an unnamed variable table with the menu command **Table > New**, you can establish a connection to the last configured CPU configured if it is defined.

20.6 Monitoring Variables

20.6.1 Introduction to Monitoring Variables

The following methods are available to you for monitoring variables:

- Activate the Monitor function with the menu command **Variable > Monitor**. The values of the selected variables are displayed in the variable table in accordance with the trigger point and trigger frequency set. If you set the trigger frequency "Every cycle", you can toggle the Monitor function off again with the menu command **Variable > Monitor**.
- You can update the values of the selected variables once and immediately using the menu command **Variable > Update Monitor Values**. The current values of the selected variables are displayed in the variable table.

Aborting "Monitoring" with ESC

If you press ESC while the "Monitoring" function is active, the function is terminated without a query.

20.6.2 Defining the Trigger for Monitoring Variables

You can display on the programming device the current values of individual variables in a user program at a specific point during program processing (trigger point) in order to monitor them.

When you select a trigger point you determine the point in time at which the monitor values of variables will be displayed.

You can set the trigger point and a trigger frequency using the menu command **Variable > Trigger**.

Trigger	Possible Settings
Trigger point	Start of cycle End of cycle Transition from RUN to STOP
Trigger frequency	Once Every cycle

Trigger Point

The following figure shows the position of the trigger points.

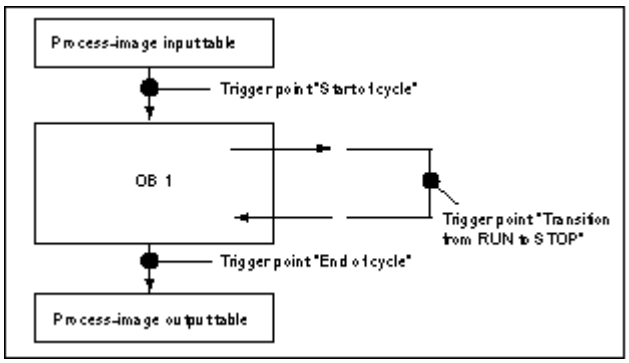

To display the modified value in the "Status Value" column, you should set the trigger point for monitoring to "Start of cycle" and the trigger point for modifying to "End of cycle".

Trigger Immediately

You can update the values of selected variables using the menu command **Variable > Update Monitor Values.** This command is taken to mean "trigger immediately" and is executed as quickly as possible without reference to any point in the user program. These functions are mainly used for monitoring and modifying in STOP mode.

Trigger Frequency

The following table shows the effect that the trigger frequency has on the monitoring of variables:

	Trigger frequency: Once	**Trigger frequency: Every cycle**
Monitor Variables	*Update once* Dependent on trigger point	*Monitoring with a defined trigger* When testing a block you can track the progress of processing exactly.

20.7 Modifying Variables

20.7.1 Introduction to Modifying Variables

The following methods are available to you for modifying variables:

- Activate the Modify function with the menu command **Variable > Modify**. The user program applies the modify values for the selected variables from the variable table in accordance with the trigger point and trigger frequency set. If you set the trigger frequency "Every cycle," you can toggle the Modify function off again with the menu command **Variable > Modify**.
- You can update the values of the selected variables once and immediately using the menu command **Variable > Activate Modify Values**.

The functions Force and Enable Peripheral Output (PQ) provide other possibilities.

When Modifying, Note:

- Only those addresses that were visible in the variable table when you started modifying are modified.
  If you decrease the size of the visible area of the variable table once you have started modifying, addresses may be modified that are no longer visible.
  If the visible area of the variable table is made larger, there may be addresses visible that are not modified.
- Modifying cannot be undone (for example, with **Edit > Undo**).

Danger

Changing the variable values while a process is running can lead to serious damage to property or personnel if errors occur in the function or in the program.
Make sure that no dangerous situations can occur before you execute the "Modify" function.

Aborting "Modifying" with ESC

If you press ESC while the "Modifying" function is in process, the function is aborted without a query.

20.7.2 Defining the Trigger for Modifying Variables

You can assign fixed values to individual variables of a user program (once or every cycle) at a specific point during program processing (trigger point).

When you select a trigger point you determine the point in time at which the modify values are assigned to the variables.

You can set the trigger point and a trigger frequency using the menu command **Variable > Trigger**.

Trigger	Possible Settings
Trigger point	Start of cycle End of cycle Transition from RUN to STOP
Trigger frequency	Once Every cycle

Trigger Point

The following figure shows the position of the trigger points.

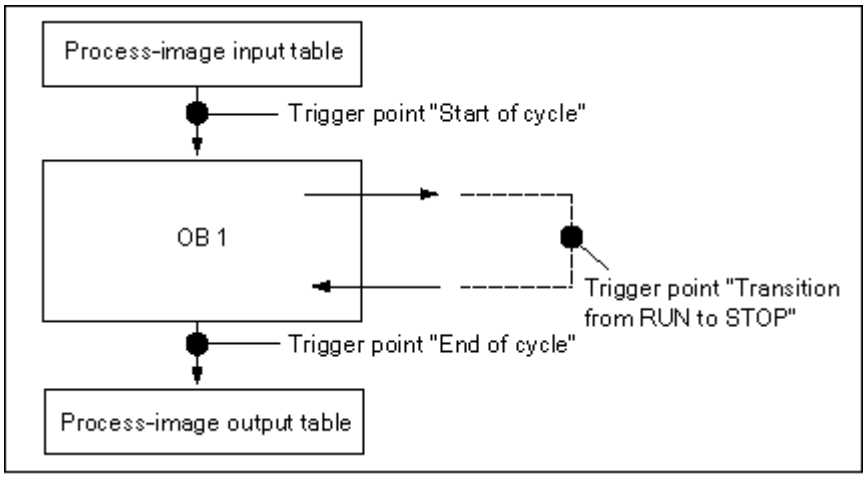

The position of the trigger points shows:

- Modifying inputs is only useful with the trigger point "Start of cycle" (corresponds to the start of the user program OB 1), because otherwise the process image of the inputs is updated after modifying and therefore overwritten).
- Modifying outputs is only useful with the trigger point "End of cycle" (corresponds to the end of the user program OB 1), because otherwise the user program can overwrite the process image of the outputs).

To display the modified value in the "Status Value" column, you should set the trigger point for monitoring to "Start of cycle" and the trigger point for modifying to "End of cycle".

The following applies to trigger points when modifying variables:

- If you set "Once" as the trigger frequency, a message appears if the selected variables cannot be modified.
- With the trigger frequency "Every cycle," no message appears.

Trigger Immediately

You can modify the values of selected variables using the menu command **Variable > Activate Modify Values**. This command is taken to mean "trigger immediately" and is executed as quickly as possible without reference to any point in the user program. This function is used mainly for modifying in STOP mode.

Trigger Frequency

The following table shows the effect that the trigger condition set has on the modifying of variables:

	Trigger frequency: Once	**Trigger frequency: Every cycle**
Modify Variables	*Activate once* You can assign values to variables once, independent of the trigger point.	*Modifying with a defined trigger* By assigning fixed values you can simulate certain situations for your user program and use this to debug the functions you have programmed.

20.8 Forcing Variables

20.8.1 Safety Measures When Forcing Variables

Beware of Injury to Personnel and Damage to Property

Note that when using the "Force" function, any incorrect action could:

- Endanger the life or health of personnel or
- Cause damage to machines or the whole plant.

Caution

- Before you start the Force function you should check that nobody is executing this function on the same CPU at the same time.
- A Force job can only be deleted or terminated with the menu command **Variable > Stop Forcing**. Closing the force values window or exiting the "Monitoring and Modifying Variables" application does not delete the force job.
- Forcing cannot be undone (for example, with **Edit > Undo**).
- Read the information on the Differences between Forcing and Modifying Variables.
- If a CPU does not support the Force function, all menu commands in the Variable menu linked with forcing are deactivated.

If the output disable is deactivated with the menu command **Variable > Enable Peripheral Output**, all forced output modules output their force value.

20.8.2 Introduction to Forcing Variables

You can assign fixed values to individual variables of a user program so that they cannot be changed or overwritten even by the user program executing in the CPU. The requirement for this is that the CPU supports this function (for example, the S7-400 CPUs). By assigning fixed values to variables you can set specific situations for your user program and use this to test the programmed functions.

"Force Values" Window

Only when the "Force Values" window is active can the menu commands for forcing be selected.

To display this window, select the menu command **Variable > Display Force Values**.

You should only open one single "Force Values" window for a CPU. The variables together with their respective force values for the active force job are displayed in this window.

Example of a Force Values Window

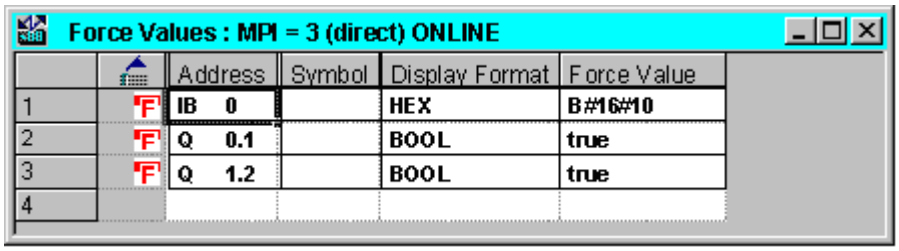

The name of the current online connection is shown in the **title bar**.

The data and time the force job was read from the CPU are shown in the **status bar**.

If no force job is active, the window is empty.

The different methods of **displaying variables** in the "Force Values" window have the following significance:

Display	**Meaning**
Bold:	Variables that are already assigned a fixed value in the CPU.
Normal:	Variables that are being edited.
Grayed out:	Variables of a module that is not present/inserted in the rack or Variables with an address error; an error message is displayed.

Using Forcible Addresses from the Variable Table

If you want to enter a variable from a variable table in the force value window, select the table and the required variable. Next, call menu command **Variable > Force values** to open the force value window. The variables a module can force will be entered in the force value window.

Using the Force Job from the CPU or Setting Up a New Force Job

If the "Force Values" window is open and active, another message is displayed:

- If you confirm it, the changes in the window are overwritten with the force job existing on the CPU. You can restore the previous window contents with the menu command **Edit > Undo**.
- If you cancel it, the current contents of the window are retained.
  You can then save the contents of the "Force Values" window as a variable table using the menu command **Table > Save As** or select the menu command **Variable > Force**: this writes the current contents of the window to the CPU as the new force job.

Monitoring and modifying variables is only possible in the variable table and not in the "Force Values" window.

Deleting Force Values

Call menu command **Variable > Display Force Values** to open the force value window. next, you can call menu command **Variable > Delete Force** to delete the force values from the selected CPU.

Saving a Force Values Window

You can save the contents of the force values window in a variable table. Using the **Insert > Variable Table** menu command, you can reinsert the saved contents in a force values window.

Notes on Symbols in the Force Values Window

The symbols in the last active window are entered except if you opened the "Monitoring and Modifying Variables" application from another application which has no symbols.

If you cannot enter symbolic names, the "Symbol" column is hidden. The menu command **Options > Symbol Table** is deactivated in this case.

20.8.3 Differences Between Forcing and Modifying Variables

The following table summarizes the differences between forcing and modifying:

Feature / Function	**Forcing with S7-400 (incl. CPU 318-2DP)**	**Forcing with S7-300 (without CPU 318-2DP)**	**Modify**
Bit memory (M)	**yes**	–	**yes**
Timers and counters (T, C)	–	–	**yes**
Data blocks (DB)	–	–	**yes**
Peripheral inputs (PIB, PIW, PID)	**yes**	–	–
Peripheral outputs (PQB, PQW, PQD)	**yes**	–	**yes**
Inputs and outputs (I, Q)	**yes**	**yes**	**yes**
User program can overwrite the modify/force values	–	**yes**	**yes**
Replacing the force value effective without interruption	**yes**	**yes**	–
The variables retain their values when the application is exited	**yes**	**yes**	–
The variables retain their values after the connection to the CPU is broken	**yes**	**yes**	–
Addressing errors permitted: e.g. IW1 modify/force value: 1 IW1 modify/force value: 0	–	–	The last becomes effective
Setting triggers	Always trigger immediately	always trigger immediately	once or every cycle
Function only affects variable in visible area of active window	Affects all force values	affects all force values	**yes**

Note

- With "Enable Peripheral Outputs," the force values for forced peripheral outputs become effective on the corresponding output modules; the modify values for peripheral outputs, however, do not.
- With forcing, the variable always has the forced value. This value is read during each read access to the user program. All forms of write access are ineffective.
- With permanent modifying, read access to the program is effective and remains so until the next trigger point.

21 Testing Using Program Status

21.1 Testing Using Program Status

You can test your program by displaying the program status (RLO, status bit) or the contents of the corresponding registers for every instruction. You can define the scope of the information displayed in the "LAD/FBD" tab in the "Customize" dialog box. You open this dialog box using the menu command **Options > Customize** in the "LAD/STL/FBD: Programming Blocks" window.

Warning

Testing a program while a process is running can lead to serious damage to property or persons if errors occur in the function or in the program.

Ensure that no dangerous situations can occur before you execute this function.

Requirements

To display the program status, the following requirements must be fulfilled:

- You must have saved the block without errors and then downloaded it to the CPU.
- The CPU must be in operation and the user program running.

Basic Procedure for Monitoring the Program Status

It is strongly recommended that you do not call the whole program and debug it, but call the blocks one by one and debug them individually. You should start with the blocks in the last nesting level of the call hierarchy, for example, by calling them in OB1 and creating the environment to be tested for the block by monitoring and modifying variables.

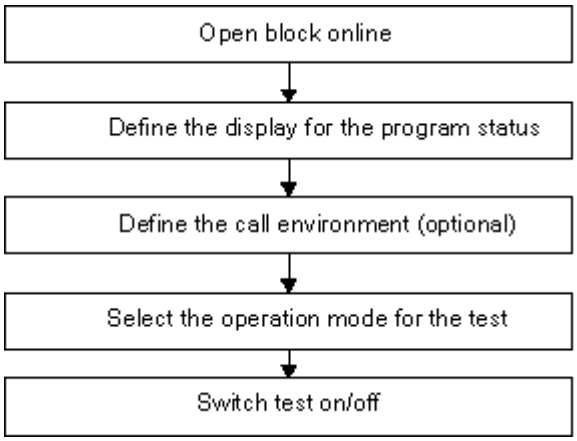

To set breakpoints, and to execute the program in single-step mode, test operation mode must be set (see menu command **Debug > Operation**). These test functions are not possible in process operation mode.

21.2 Program Status Display

The display of the **program status** is updated cyclically. It begins with the selected network.

Preset Color Codes in LAD and FBD

- Status fulfilled: green continuous lines
- Status not fulfilled: blue dotted lines
- Status unknown: black continuous lines

The preset for line type and color can be changed under the menu command **Options > Customize**, "LAD/FBD" tab.

Status of Elements

- The status of a contact is:
  - Fulfilled if the address has the value "1,"
  - Not fulfilled if the address has the value "0,"
  - Unknown if the value of the address is unknown.
- The status of elements with enable output (ENO) corresponds to the status of a contact with the value of the ENO output as the address.
- The status of elements with a Q output corresponds to the status of a contact with the value of the address.
- The status for CALLs is fulfilled if the BR bit is set following the call.
- The status of a jump instruction is fulfilled if the jump is executed, meaning if the jump condition is fulfilled.
- Elements with enable output (ENO) are shown in black if the enable output is not connected.

Status of Lines

- Lines are black if they are not run through or if their status is unknown.
- The status of lines that start at the power rail is always fulfilled ("1").
- The status of lines at the start of parallel branches is always fulfilled ("1").
- The status of the line following an element is fulfilled if both the status of the line before the element and the status of the element are fulfilled.
- The status of the line following NOT is fulfilled if the status of the line before NOT is not fulfilled (and vice versa).
- The status of the line **after** an intersection of a number of lines is fulfilled if:
  - The status of at least one line **before** the intersection is fulfilled.
  - The status of the line before the branch is fulfilled.

Status of Parameters

- The values of parameters **in bold type** are current.
- The values of parameters in thin type result from a previous cycle; the program section was not processed in the current scan cycle.

21.3 What You Should Know About Testing in Single-Step Mode/Breakpoints

When testing in single-step mode you can do the following:

- Execute programs statement by statement (in single steps)
- Set breakpoints

The function "testing in single-step mode" is not possible for all programmable controllers (refer to the documentation for the relevant programmable controller).

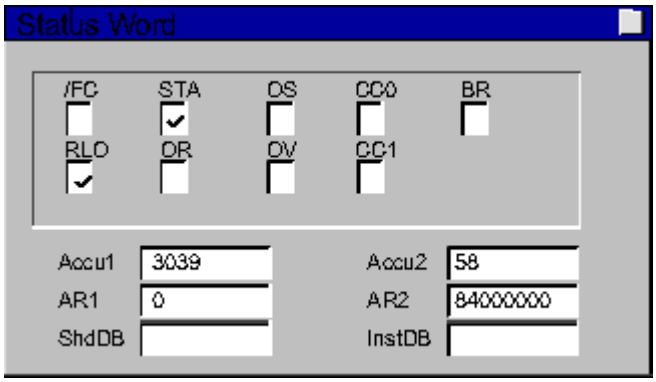

Requirements

- The test operation mode must be set. Testing in single-step mode is not possible in process operation mode (see menu command **Debug > Operation**).
- Testing in single-step mode is possible only in Statement List. For blocks in Ladder Logic or Function Block Diagram you must change the view using the menu command **View > STL**.
- The block must not be protected.
- The block must be open online.
- The opened block must not be changed in the Editor.

Number of Breakpoints

The number of breakpoints is variable and depends on the following:

- The number of breakpoints already set
- The number of variable statuses running
- The number of program statuses running

Refer to your programmable controller documentation to find out whether it supports testing in single-step mode.

You will find the menu commands you can use to set, activate, or delete breakpoints in the "Debug" menu. You can also select these menu commands using icons in the breakpoint bar. Display the breakpoint bar using the menu command **View > Breakpoint Bar**.

Permitted Test Functions

- Monitor/modify variables
- Module information
- Operating mode

Danger

Risk of dangerous plant status in HOLD mode.

21.4 What You Should Know About the HOLD Mode

If the program encounters a breakpoint, the programmable controller goes into the HOLD operating mode.

LED Display in HOLD Mode

- LED RUN flashes
- LED STOP is lit

Program Processing in HOLD Mode

- In HOLD mode, no S7 code is processed, meaning no priority classes are processed any further.
- All timers are frozen:
  - No timer cells are processed
  - All monitoring times are paused
  - The basic clock rate of the time-controlled levels are paused
- The real time clock continues to run
- For safety reasons, the outputs are always disabled in HOLD mode ("output disable").

Behavior following Power Supply Failure in HOLD Mode

- Programmable controllers with battery backup change to STOP mode and remain there following a power supply failure during HOLD mode and a subsequent return of power. The CPU does not execute an automatic restart (warm restart). From STOP mode you can determine how processing continues (for example, by setting/resetting breakpoints, executing a manual restart).
- Programmable controllers without battery backup are not "retentive" and therefore execute an automatic warm restart when power returns, regardless of the previous operating mode.

21.5 Program Status of Data Blocks

From STEP 7 version 5 onwards, it is possible to observe a data block online in the data view. The display can be activated either by an online data block or by an offline data block. In both cases, the contents of the online data block in the programmable controller are displayed.

The data block must not be modified before the program status is started. If there is a structural difference (declaration) between the online data block and the offline data block, the offline data block can be downloaded to the programmable controller directly on request.

The data block must be located in the "data view," so that the online values can be displayed in the "Actual Value" column. Only the part of the data block which is visible on the screen is updated. While the status is active, you cannot switch to the declaration view.

While the update is in progress, a green bar is visible in the status bar and the operating mode is displayed.

The values are issued in the format of the respective data type; the format cannot be changed.

After program status has been concluded, the "Actual Value" column displays again the contents which were valid before the program status. It is not possible to transfer the updated online values to the offline data block.

Updating data types:

All the elementary data types are updated in a shared DB, as well as in all the declarations (in/out/in-out/stat) of an instance data block.

Some data types cannot be updated. When the program status is active, fields in the "Actual Value" column which contain data which have not been updated are displayed with a gray background.

- The complex data types DATE_AND_TIME and STRING are not updated.
- In the complex data types ARRAY, STRUCT, UDT, FB, and SFB, only those elements which are elementary data types are updated.
- In the INOUT declaration of an instance data block only the pointer to the complex data type is displayed, not the elements of the data type itself. The pointer is not updated.
- Parameter types are not updated

21.5.1 Setting the Display for Program Status

You can set the display of the program status in a Statement List, Function Block Diagram, or Ladder Logic block yourself.

To set the display, proceed as follows:

1. Select the menu command **Options > Customize**.
2. In the "Customize" dialog box, select the "STL" tab or the "LAD/FBD" tab.
3. Select the required options for testing the program. You can display the following status fields.

Activate...	**...To Display**
Status bit	Status bit; bit 2 of the status word
RLO	Bit 1 of the status word; shows the result of a logic operation or a mathematical comparison
Standard status	Content of accumulator 1
Address register 1/2	Content of the respective address register with register-indirect addressing (area-internal or area-crossing)
Akku2	Content of accumulator 2
DB register 1/2	Content of the data block register, of the first and/or second open data block
Indirect	Indirect memory reference; pointer reference (address), not address content reference; for memory-indirect addressing only, not possible with register-indirect addressing. Contents of a timer word or counter word if corresponding instructions appear in the statement
Status word	All status bits of the status word

22 Testing using the Simulation Program (Optional Package)

22.1 Testing using the Simulation Program S7 PLCSIM (Optional Package)

With the optional software package PLC Simulation you can run and test your program on a simulated programmable controller that exists on your computer or programming device (for example, Power PG). As the simulation is realized completely by the STEP 7 software, you do not require any S7 hardware (CPU or signal modules). Using the simulated S7 CPU you can test and troubleshoot programs for S7-300 and S7-400 CPUs.

This application provides a simple user interface for monitoring and modifying the various parameters that are used in your program (for example, for switching inputs on and off). You can also use the various applications in the STEP 7 software while your program is being processed by the simulated CPU. For example, you can monitor and modify variables with the variable table.

23 Diagnostics

23.1 Hardware Diagnostics and Troubleshooting

You can see whether diagnostic information is available for a module by the presence of diagnostics symbols. Diagnostics symbols show the status of the corresponding module and, for CPUs, the operating mode as well.

Diagnostics symbols are displayed in the project window in the online view as well as in the quick view (default setting) or the diagnostic view when you call the function "Hardware Diagnostics." Detailed diagnostic information is displayed in the "Module Information" application, which you can start by double-clicking a diagnostics symbol in the quick view or the diagnostic view.

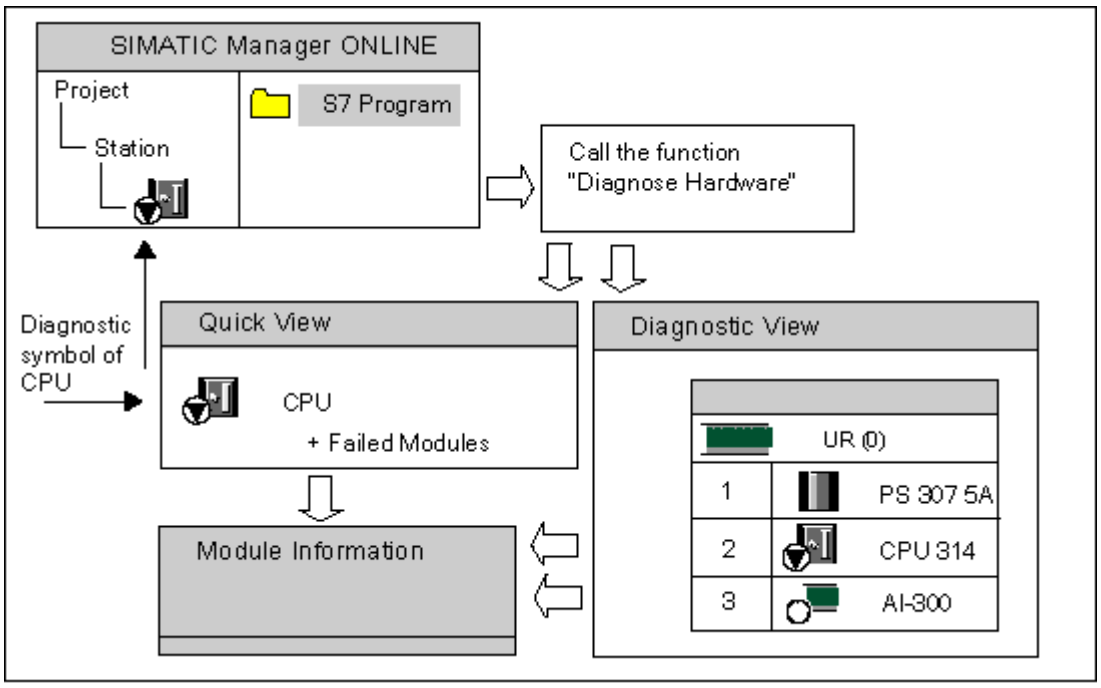

Displaying Maintenance Information

As of STEP 7 V5.4 Service Pack 1, certain PROFINET components can display information indicating whether or not preventive maintenance is necessary and, if it is, how urgent it is.

The following maintenance information is available:

- Maintenance required (indicated by a green wrench):
  The relevant component must be replaced within a foreseeable period.
- Maintenance demanded (indicated by an yellow wrench):
  The relevant component must be replaced soon.

One example of maintenance might be the replacement of a fiber-optic cable due to increasing attenuation on a port of the PROFINET interface.

How to Locate Faults

1. Open the online window for the project with the menu command **View > Online**.
2. Open all the stations so that the programmable modules configured in them are visible.
3. Check to see which CPU is displaying a diagnostics symbol indicating an error or fault. You can open the help page with an explanation of the diagnostics symbols using the F1 key.
4. Select the station that you want to examine.
5. Select the menu command **PLC > Diagnostics/Settings > Module Information…** to display the module information for the CPU in this station.
6. Select the menu command **PLC > Diagnostics/Settings > Hardware Diagnostics** to display the "quick view" with the CPU and the failed modules in this station. The display of the quick view is set as default (menu command **Option > Customize**, "View" tab).
7. Select a faulty module in the quick view.
8. Click the "Module Information" button to obtain the information on this module.
9. Click the "Open Station Online" button in the quick view to display the diagnostic view. The diagnostic view contains all the modules in the station in their slot order.
10. Double-click a module in the diagnostic view in order to display its module information. In this way, you can also obtain information for those modules that are not faulty and therefore not displayed in the quick view.

You do not necessarily have to carry out all of the steps; you can stop as soon as you have obtained the diagnostic information you require.

23.2 Diagnostics Symbols in the Online View

Diagnostics symbols are displayed in the online project window and in the hardware configuration window with the online view of configuration tables.

Diagnostics symbols make it easier for you to detect a fault. You can see by a glance at a module symbol whether diagnostic information is available. If there are no faults present, the symbols for the module types are displayed without additional diagnostics symbols.

If diagnostic information is available for a module, a diagnostics symbol is displayed in addition to the module symbol or the module symbol is displayed with reduced contrast.

Diagnostics Symbols for Modules (Example: FM / CPU)

Symbol	Meaning
	Mismatch between preset and actual configuration: the configured module does not exist or a different module type is inserted
	Fault: module has a fault. Possible causes: diagnostic interrupt, I/O access error, or error LED detected
	Diagnostics not possible: no online connection, or the CPU does not return diagnostic information to the module (for example, power supply, or submodule).

Diagnostics Symbols for Operating Modes (Example: CPU)

Symbol	Mode
	STARTUP
	STOP
	STOP triggered by STOP mode on another CPU in multicomputing operation
	RUN
	HOLD

Diagnostics Symbol for Forcing

Symbol	Mode
	Variables are being forced on this module, meaning variables in the user program for the module are assigned fixed values that cannot be changed by the program. The symbol for forcing can also appear in combination with other symbols (here with the symbol for RUN mode).

Diagnostics Symbols for Maintenance Information (Example CPU)

Symbol	Meaning
	Maintenance required
	Maintenance demanded or redundancy loss at redundant PROFINET devices or redundancy loss at redundant DP slaves

Diagnostic Symbol for Deactivating (Example DP slave or PROFINET IO device)

Icon	Meaning
	This DP slave or this PROFINET IO device was deactivated by SFC12.

Diagnostic symbols in H System

Refer to the manual "Fault-tolerant systems S7-400H ", section "System diagnostics on a fault-tolerant system" for information on the diagnostic symbols in a fault-tolerant system.

Updating the Display of Diagnostic Symbols

The appropriate window must be activated.

- Press F5 or
- Select the menu command **View > Update** in the window.

23.3 Diagnosing Hardware: Quick View

23.3.1 Calling the Quick View

The quick view offers you a quick way of using "Diagnosing Hardware" with less information than the more detailed displays in the diagnostic view of HW Config. The quick view is displayed as default when the "Diagnose Hardware" function is called.

Displaying the Quick View

You call this function from the SIMATIC Manager using the menu command **PLC > Diagnostics/Settings > Diagnose Hardware**.

You can use the menu command as follows:

- In the online window of the project if a module or an S7 program is selected.
- If a node ("MPI=...") is selected in the "Accessible Nodes" window and this entry belongs to a CPU.

From the configuration tables displayed, you can select modules whose module information you want to display.

23.3.2 Information Functions in the Quick View

The following information is displayed in the quick view:

- Data for the online connection to the CPU
- Diagnostic symbol for the CPU
- Diagnostic symbols for the modules in which the CPU has detected a fault (for example, diagnostic interrupt, I/O access error)
- Module type and address of the module (rack, slot, DP master system with station number).

Other Diagnostic Options in the Quick View

- **Displaying the Module Information**
  You can call this dialog box by clicking the "Module Information" button. The dialog box displays detailed diagnostic information, depending on the diagnostic capabilities of the selected module. In particular, you can display the entries in the diagnostic buffer via the diagnostic information of the CPU.
- Displaying the Diagnostic View
  Using the "Open Station Online" button, you can open the dialog box which, in contrast to the quick view, contains a graphic overview of the whole station as well as configuration information. It focuses on the module which is highlighted in the list "CPU / Faulty Modules."

23.4 Diagnosing Hardware: Diagnostic View

23.4.1 Calling the Diagnostic View

Using this method you can open the "Module Information" dialog box for all modules in the rack. The diagnostic view (configuration table) shows the actual structure of a station at the level of the racks and DP stations with their modules.

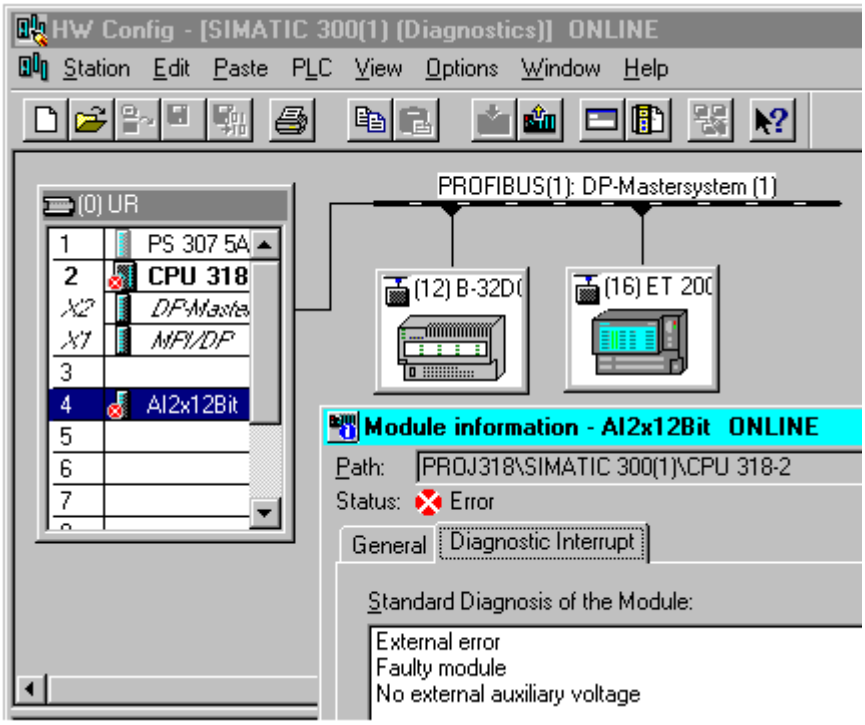

Note

- If the configuration table is already open offline, you can also get the online view of the configuration table using the menu command **Station > Open Online**.
- Depending on the diagnostics capability of the module, a varying number of tabs are displayed in the "Module Information" dialog box.
- In the "Accessible Nodes" window, only the modules with their own node address (Ethernet, MPI or PROFIBUS address) are ever visible.

Calling from the ONLINE view of a project in the SIMATIC Manager

1. Establish an online connection to the programmable controller using the menu command **View > Online** in the project view in the SIMATIC Manager.
2. Select a station and double-click to open it.
3. Then open the "Hardware" object in it. The diagnostic view is opened.

Now you can select a module and call up its module information using the menu command **PLC > Diagnostics/Settings > Module Information**.

Calling from the offline view of a project in the SIMATIC Manager

Execute the following steps:

1. Select a station from the project view of the SIMATIC Manager and open it with a double-click.
2. Then open the "Hardware" object in it. The configuration table is opened.
3. Select the **Station > Open Online** menu command.
4. The diagnostic view of HW Config is opened with the station configuration as determined from the modules (for example, CPU). The status of the modules is indicated by means of symbols. Refer to the online help for the meaning of the various symbols. Faulty modules and configured modules which are missing are listed in a separate dialog box. From this dialog box you can navigate directly to one of the selected module ("Go To" button).
5. Double-click the symbol for the module whose status you are interested in. A dialog box with tabs (depending on the type of module) gives you a detailed analysis of the module status.

Calling from the "Accessible Nodes" window in the SIMATIC Manager

Execute the following steps:

1. Open the "Accessible Nodes" window in the SIMATIC Manager using the menu command **PLC > Display Accessible Nodes**.
2. Select a node in the "Accessible Nodes" window.
3. Select the menu command PLC > Diagnostics/Settings > Diagnose Hardware.

Note

In the "Accessible Nodes" window, only the modules with their own node address (Ethernet, MPI or PROFIBUS address) are visible.

23.4.2 Information Functions in the Diagnostic View

In contrast to the quick view, the diagnostic view displays the entire station configuration available online. This consists of:

- Rack configurations
- Diagnostics symbols for **all** configured modules
  From these, you can read the status of each module and, with CPU modules, the operating mode.
- Module type, order number and address details, comments on the configuration.

Additional Diagnostic Options in the Diagnostic View

By double-clicking a module, you can display the operating mode of this module.

23.5 Module Information

23.5.1 Options for Displaying the Module Information

You can display the "Module Information" dialog box from different starting points. The following procedures are examples of frequently used methods of calling module information:

- In the SIMATIC Manager from a window with the project view "online" or "offline."
- In the SIMATIC Manager from an "Accessible Nodes" window
- In the diagnostic view of HW Config

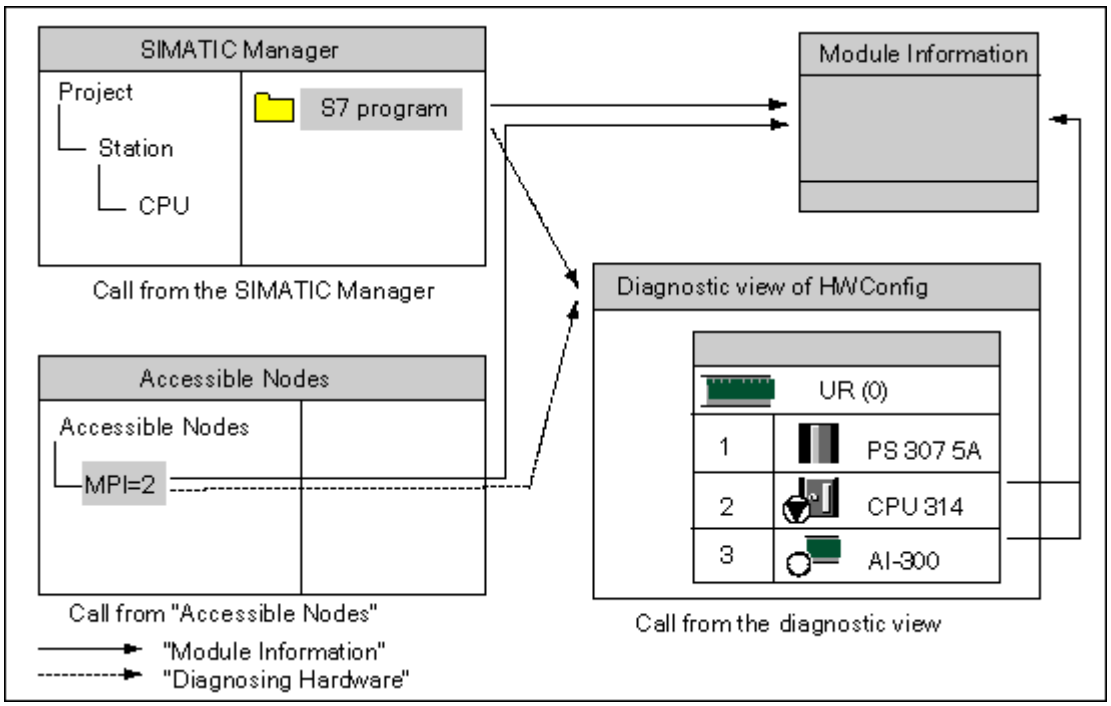

In order to display the status of a **module with its own node address**, you require an online connection to the programmable controller. You establish this connection via the online view of a project or via the "Accessible Nodes" window.

23.5.2 Module Information Functions

The module information functions can each be found in the various tabs within the "Module Information" dialog box. When displayed in an active situation, only those tabs relevant to the selected module are displayed.

Function/Tab	Information	Use
General	Identification data on the selected module; for example, order number, release number, status, slot in rack	The online information from the inserted module can be compared with the data for the configured module
Diagnostic Buffer	Overview of events in the diagnostic buffer and detailed information on the selected event	To find the cause of a CPU STOP and evaluate the events on the selected module leading to it Using the diagnostic buffer, errors in the system can still be analyzed at a later time to find the cause of a STOP or to trace back and categorize the occurrence of individual diagnostic events
Diagnostic Interrupt	Diagnostic data for the selected module	To evaluate the cause of a module fault
DP Slave Diagnostics	Diagnostic data for the selected DP slave (to EN 50170)	To evaluate the cause of a fault in a DP slave
Memory	Memory capacity. Current utilization of the work memory, load memory and retentive memory of the selected CPU	Before new or extended blocks are transferred to a CPU, to check whether sufficient load memory is available in the CPU/function module or to compress the memory content.
Scan Cycle Time	Duration of the longest, shortest, and last scan cycle of the selected CPU	To keep a check on the configured minimum cycle time, and the maximum and current cycle times
Time System	Current time, operating hours, and information about synchronizing clocks (synchronization intervals)	To display and set the time and date of a module and to check the time synchronization
Performance Data	Address areas and the available blocks for the selected module (CPU/FM)	Before and during the creation of a user program to check whether the CPU fulfils the requirements for executing a user program; for example, load memory size or size of the process image
Blocks (can be opened from the "Performance Data" tab)	Display of all block types available in the scope of supply of the selected module List of OBs, SFBs, and SFCs you can use for this module	To check which standard blocks your user program can contain or call to be able to run on the selected CPU.
Communication	Transmission rates, the overview of communication connections, the communication load, and the maximum message frame size on the communication bus of the selected module	To determine how many and which CPU connections are possible and how many are in use
Connection statistics	Statistics about the distribution of the communication load on your CPU.	To determine whether an overload through communication existst

Function/Tab	Information	Use
Stacks	**Stacks** tab: Can only be called up in STOP mode or HOLD mode. The B stack for the selected module is displayed. You can then also display the I stack, the L stack, and the nesting stack and jump to the error location in the interrupted block.	To determine the cause of a transition to STOP and to correct a block
IO device diagnostics	Diagnostic data of the selected PROFINET IO device	To find out the cause of an error on an IO device
Identification	Identification data of the selected module, for example the serial number, manufacturer's identification	The online information from the inserted module can be compared with the data of the configured module.
Process Objects	Information on the license objects of process automation CPUs and the identification data of your system expansion card	To obtain the number of license objects of process automation CPUs
Communication diagnostics	Diagnostic data (communication error) of the selected PROFINET module	To find out the cause of a communication error to a port or interface of an IO device.
Interface	Information on the selected PROFINET module, for example IP address	To obtain out all the interface properties of a PROFINET module
Network Connection	Physical properties of the PROFINET interface of a PROFINET module	To obtain all the physical properties of the PROFINET interface of a PROFINET module
Statistics	Statistical data for sent and received data packets of a PROFINET module	To evaluate the quality of the data transfer from or to a PROFINET module
Sync Module Diagnostics	Channel-specific diagnostics data of the sync modules for the CPUs 41x-5H PN/DP	To determine the cause of sync module errors and to remedy them

Additional Information Displayed

For each tab, the following information is displayed:

- Online path to the selected module
- Operating mode of the corresponding CPU (for example, RUN, STOP)
- Status of the selected module (for example, error, OK)
- Operating mode of the selected module (for example, RUN, STOP) if it has its own operating mode (for example, CP 342-5)

The operating mode of the CPU itself and the status of the selected module cannot be displayed if the module information for a non-CPU module is opened from the "Accessible Nodes" window.

Displaying a Number of Modules Simultaneously

You can display the module information for a number of modules simultaneously. To do this, you must change to the respective module context, select another module, and then call the module information for it. Another "Module Information" dialog box is then displayed. Only one dialog box can be opened for each module.

Updating the Display of Module Information

Each time you switch to a tab in the "Module Information" dialog box, the data are read from the module again. While a page is displayed, however, the contents are not updated. If you click the "Update" button, you can read the data from the module without changing the tab.

23.5.3 Scope of the Module Type-Dependent Information

The scope of information that can be evaluated and displayed is dependent on:

- The module selected, and
- From which view you call the module information
  A full scope of information is available when called from the online view of the configuration tables or from the project window.
  A limited scope of information is available when called from the "Accessible Nodes" window.

Depending on the scope of the information, the modules are divided into the categories "with system diagnostic capability," "with diagnostic capability," or "without diagnostic capability." The following figure shows these categories:

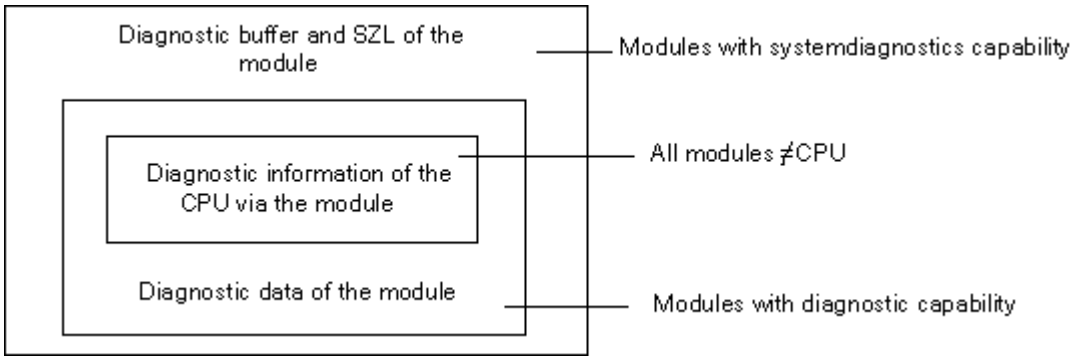

- Modules with system diagnostic capability are, for example, the modules FM 351 and FM 354
- Modules with diagnostic capability are most analog signal modules.
- Modules without diagnostic capability are most digital signal modules.

Tabs Displayed

The table shows which property tabs can be present in the "Module Information" dialog box for each module type.

Tab page	CPU	Module capable of system diagnostics	Module capable of diagnostics	Module without diagnostic capability	DP slave	IO device
General	yes	yes	yes	yes	yes	yes
Diagnostic buffer	yes	yes	–	–	–	–
Diagnostic interrupt	–	yes	yes	–	yes	yes
Memory	yes	–	–	–	–	–
Cycle time	yes	–	–	–	–	–
Time system	yes	–	–	–	–	–
Performance data	yes	–	–	–	–	–
Stacks	yes	–	–	–	–	–
Communication	yes	–	–	–	–	–
Connection statistics [2)]	yes	–	–	–	–	–
Identification	yes	yes	yes	–	yes	yes
DP slave diagnostics	–	–	–	–	yes	–
IO device diagnostics	–	–	–	–	–	yes
H status [1)]	yes	–	–	–	–	–
Process objects [4)]	yes	–	–	–	–	–
Communication diagnostics	–	–	–	–	–	yes
Interface	–	–	–	–	–	yes
Network Connection	–	–	–	–	–	yes
Statistics	–	–	–	–	–	yes
Sync Module Diagnostics [3)]	yes	–	–	–	–	–

[1)] Only with CPUs in H systems

[2)] Only with S7-400 CPUs

[3)] Only with CPUs 41x-5H PN/DP

[4)] Only with process automation CPUs

In addition to the information in the tabbed property sheets, the operating mode is displayed for modules with an operating mode. When you open the dialog box from the configuration tables online, the status of the module from the viewpoint of the CPU is displayed (for example, OK, error, module not available).

23.5.4 Displaying the Module Status of PA Field Devices and DP Slaves After a Y-Link

As of STEP 7 V5.1 Service Pack 3, you can evaluate the module status of DP slaves and PA field devices "after" a DP/PA link (IM 157).

This affects the following configurations:

- IM 157 with DP/PA connectors for connecting a PROFIBUS-PA
- IM 157 as a redundant modular interface module for connecting a non-redundant PROFIBUS-DP ("Y-link")

In this configuration, the programming device (PG) is connected to the same PROFIBUS subnet as the DP/PA link.

In addition, there is another configuration option in which the PG is connected to an Industrial Ethernet and routes an S7-400 station to the PROFIBUS subnet.

The prerequisites for this setup are shown in the following diagram:

IM 157 with DP/PA connectors for connection to PROFIBUS-PA

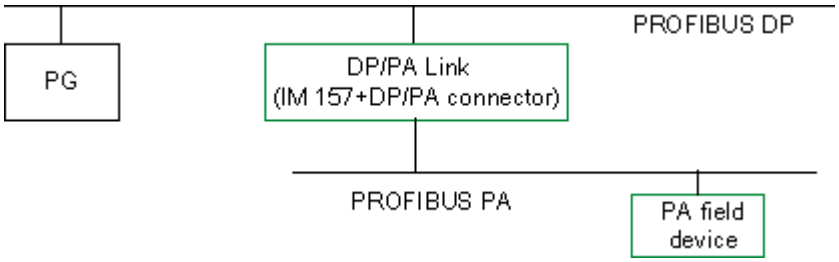

IM 157 as Y-link

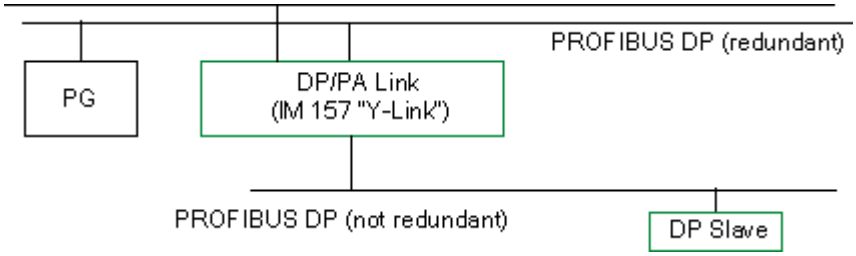

PG in an Industrial Ethernet

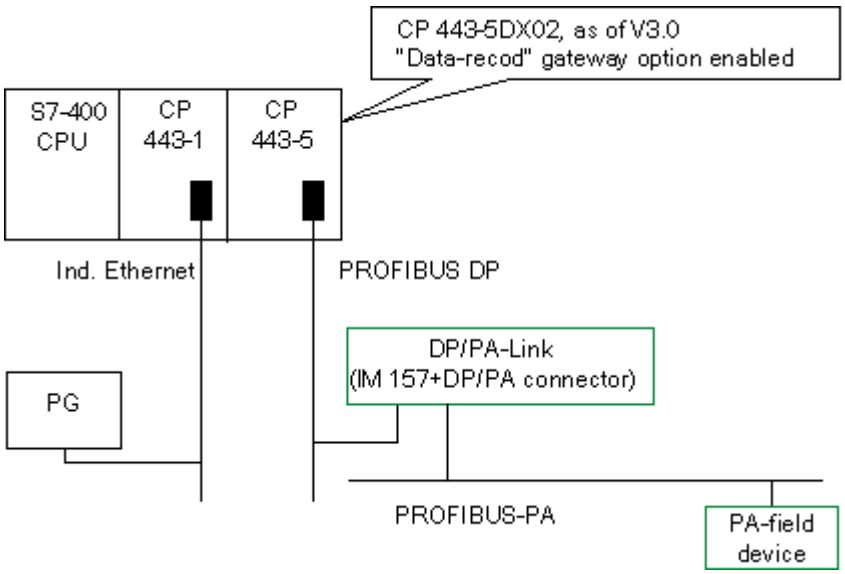

23.6 Diagnosing in STOP Mode

23.6.1 Basic Procedure for Determining the Cause of a STOP

To determine why the CPU has gone into "STOP" mode, proceed as follows:

1. Select the CPU that has gone into STOP.
2. Select the menu command PLC > Diagnostics/Settings > Module Information.
3. Select the "Diagnostic Buffer" tab.
4. You can determine the cause of the STOP from the last entries in the diagnostic buffer.

If a programming error occurs:

1. The entry "STOP because programming error OB not loaded" means, for example, that the CPU has detected a program error and then attempted to start the (non-existent) OB to handle the programming error. The previous entry points to the actual programming error.
2. Select the message relating to the programming error.
3. Click the "Open Block" button.
4. Select the "Stacks" tab.

23.6.2 Stack Contents in STOP Mode

By evaluating the diagnostic buffer and the stack contents you can determine the cause of the fault in the processing of the user program.

If, for example, the CPU has gone into STOP as a result of a programming error or the STOP command, the "Stacks" tab in the module information displays the block stack. You can display the contents of the other stacks using the "I Stack", "L Stack", and "Nesting Stack" buttons. The stack contents give you information on which instruction in which block led to the CPU going into STOP.

B Stack Contents

The B stack, or block stack, lists all the blocks that were called before the change to STOP mode and which were not completely processed.

I Stack Contents

When you click the "I Stack" button, the data at the interrupt location are displayed. The I stack, or interrupt stack, contains the data or the states which were valid at the time of the interrupt, for example:

- Accumulator contents and register contents
- Open data blocks and their size
- Content of the status word
- Priority class (nesting level)
- Interrupted block
- Block in which program processing continues after the interrupt

L Stack Contents

For every block listed in the B stack, you can display the corresponding local data by selecting the block and clicking the "L Stack" button.

The L stack, or local data stack, contains the local data values of the blocks the user program was working with at the time of the interrupt.

In-depth knowledge of the system is required to interpret and evaluate the local data displayed. The first part of the data displayed corresponds to the temporary variables for the block.

Nesting Stack Contents

When you click the "Nesting Stack" button, the contents of the nesting stack at the interrupt location are displayed.

The nesting stack is a memory area that the logic operations **A(**, **AN(**, **O(**, **ON(**, **X(**, and **XN(** use.

The button is only active if bracket expressions were still open at the time of interruption.

23.7 Checking Scan Cycle Times to Avoid Time Errors

23.7.1 Checking Scan Cycle Times to Avoid Time Errors

The "Scan Cycle Time" tab in the module information gives information about the scan cycle times of the user program.

If the duration of the longest cycle time is close to the configured maximum scan cycle time, there is a danger that fluctuations in the cycle time might cause a time error. This can be avoided if you extend the maximum cycle time (watchdog time) of the user program.

If the cycle length is less than the configured minimum scan time, the cycle is automatically extended by the CPU/FM to the configured minimum cycle time. In the case of a CPU, the background OB (OB90) is processed during this extended time (if it has been downloaded).

Setting the Scan Cycle Time

You can set the maximum and minimum cycle times when you configure the hardware. To do this, double-click in the offline view of the configuration table on the CPU/FM to define its properties. You can enter the appropriate values in the "Cycle/Clock Memory" tab.

23.8 Flow of Diagnostic Information

The following figure shows the flow of diagnostic information in SIMATIC S7.

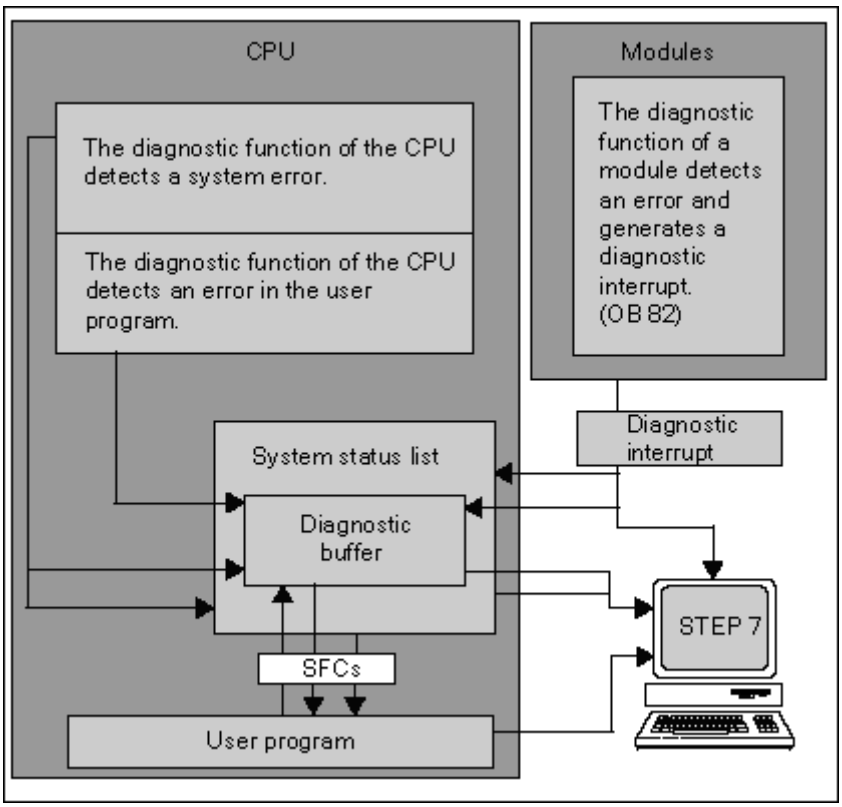

Displaying Diagnostic Information

You can read out the diagnostic entries using SFC51 RDSYSST in the user program or display the diagnostic messages in plain language with STEP 7.

They provide information about the following:

- Where and when the error occurred
- The type of diagnostic event to which the entry belongs (user-defined diagnostic event, synchronous/asynchronous error, operating mode change).

Generating Process Control Group Messages

The CPU enters events of the standard diagnostics and extended diagnostics in the diagnostic buffer. It also generates a process control group message for the standard diagnostic events if the following conditions are met:

- You have specified that process control messages will be generated in STEP 7.
- At least one display unit has logged on at the CPU for process control messages.
- A process control group message is only generated when there is not currently a process control group message of the corresponding class (there are seven classes).
- One process control group message can be generated per class.

23.8.1 System Status List SSL

The system status list (SSL) describes the current status of the programmable logic controller. It provides an overview of the configuration, the current parameter assignment, the current statuses and sequences on the CPU, and the modules belonging to it.

You can only read the data in the system status list but not modify them. It is a virtual list that is only created on request.

The information that you can display using the system status list can be divided into four areas.

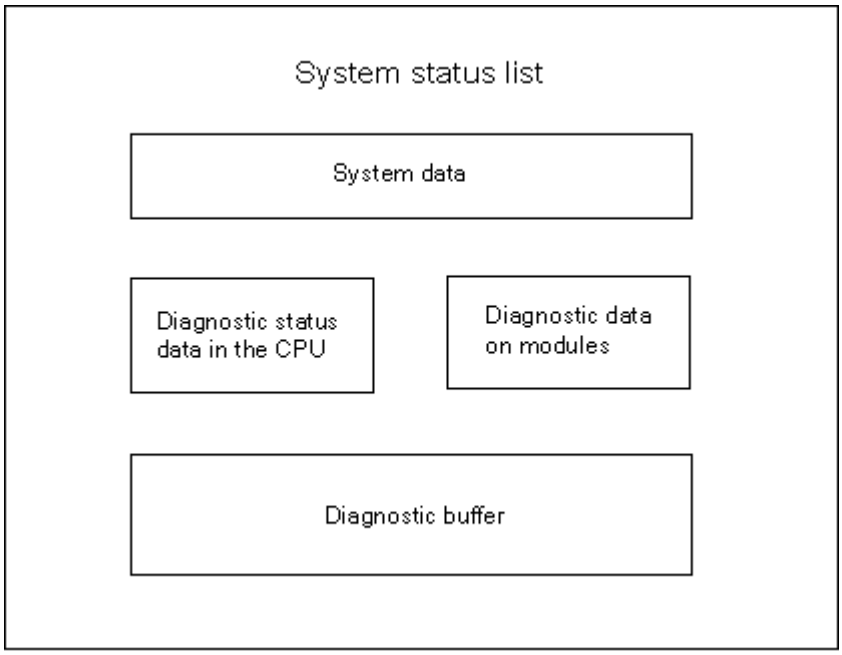

Reading Out the System Status List

There are two ways of reading out the information in system status lists, as follows:

- Implicitly, via STEP 7 menu commands from the programming device (for example, memory configuration, static CPU data, diagnostic buffer, status displays).
- Explicitly, via the system function SFC 51 RDSYSST in the user program, by entering the number of the required partial system status list (see Help on Blocks)

System Data of the System Status List

System data are intrinsic or assigned characteristic data of a CPU. The following table shows the topics about which information can be displayed (partial system status lists):

Topic	Information
Module identification	Order number, type ID, and version of the module
CPU characteristics	Time system, system behavior (for example,. multicomputing) and language description of the CPU
Memory areas	Memory configuration of the module (size of the work memory).
System areas	System memory of the module (for example, number of memory bits, timers, counters, memory type).
Block types	Which blocks (OB, DB, SDB, FC, FB) exist on the module, the maximum number of blocks of one type, and the maximum size of a block type
Assignment of interrupts and errors	Assignment of interrupts/errors to OBs
Interrupt status	Current status of interrupt processing/interrupts generated
Status of the priority classes	Which OB is being executed, which priority class is disabled due to the parameter setting
Operating mode and mode transition	Which operating modes are possible, the last operating mode change, the current operating mode

Diagnostic Status Data in the CPU

Diagnostic status data describe the current status of the components monitored by the system diagnostics. The following table shows the topics about which information can be displayed (partial system status lists):

Topic	Information
Communication status data	All the communication functions currently set in the system
Diagnostic modules	The modules with diagnostics capability logged on at the CPU
Start information list of the OB	Start information about the OBs of the CPU
Start event list	Start events and priority classes of the OBs
Module status information	Status information about all assigned modules that are plugged in, faulty, or generate hardware interrupts

Diagnostic Data on Modules

In addition to the CPU, there are also other modules with diagnostic capabilities (SMs, CPs, FMs) whose data are entered in the system status list. The following table shows the topics about which information can be displayed (partial system status list):

Topic	Information
Module diagnostic information	Module start address, internal/external faults, channel faults, parameter errors (4 bytes)
Module diagnostic data	All the diagnostic data of a particular module

23.8.2 Sending Your Own Diagnostic Messages

You can also extend the standard system diagnostics of SIMATIC S7 by using the system function SFC 52 WRUSMSG to:

- Enter your own diagnostic information in the diagnostic buffer (for example, information about the execution of the user program).
- Send user defined diagnostic messages to logged-on stations (monitoring devices such as a PG, OP or TD).

User Defined Diagnostic Events

The diagnostic events are divided into event classes 1 to F. The user defined diagnostic events belong to event classes 8 to B. These can be divided into two groups, as follows:

- Event classes 8 and 9 include messages with a fixed number and predefined text that you can call up based on the number.
- Event classes A and B include messages to which you can assign a number (A000 to A0FF, B000 to B0FF) and text of your own choice.

Sending Diagnostic Messages to Stations

In addition to making a user defined entry in the diagnostic buffer, you can also send your own user defined diagnostic messages to logged on display devices using SFC52 WRUSMSG. When SFC52 is called with SEND = 1, the diagnostic message is written to the send buffer and automatically sent to the station or stations logged on at the CPU.

If it is not possible to send messages (for example, because no display device is logged on or because the send buffer is full) the user-defined diagnostic event is still entered in the diagnostic buffer.

Generating a Message with Acknowledgement

If you acknowledge a user defined diagnostic event and want to record the acknowledgement, proceed as follows:

- When the event enters the event state, write 1 to a variable of the type BOOL, when the event leaves the event state write 0 to the variable.
- You can then monitor this variable using SFB33 ALARM.

23.8.3 Diagnostic Functions

System diagnostics detect, evaluate, and report errors that occur within a programmable controller. For this purpose, every CPU and every module with system diagnostics capability (for example, FM 354) has a diagnostic buffer in which detailed information on all diagnostic events is entered in the order they occurred.

Diagnostic Events

The following entries are displayed as diagnostic events, for example:

- Internal and external faults on a module
- System errors in the CPU
- Operating mode changes (for example, from RUN to STOP)
- Errors in the user program
- Inserting/removing modules
- User messages entered with the system function SFC52

The content of the diagnostic buffer is retained following a memory reset. Using the diagnostic buffer, errors in the system can still be analyzed at a later time to find the cause of a STOP or to trace back and categorize the occurrence of individual diagnostic events

Acquiring Diagnostic Data

You do not need to program the acquisition of diagnostic data by system diagnostics. This is a standard feature that runs automatically. SIMATIC S7 provides various diagnostic functions. Some of these functions are integrated on the CPU, others are provided by the modules (SMs, CPs, and FMs).

Displaying Faults

Internal and external module faults are displayed on the front panels of the module. The LED displays and their evaluation are described in the S7 hardware manuals. With the S7-300, internal and external faults are displayed together as a group error.

The CPU recognizes system errors and errors in the user program and enters diagnostic messages in the system status list and the diagnostic buffer. These diagnostic messages can be read out on the programming device.

Signal and function modules with diagnostic capability detect internal and external module errors and generate a diagnostic interrupt to which you can react using an interrupt OB.

23.9 Program Measures for Handling Errors

When it detects errors in program processing (synchronous errors) and errors in the programmable controller (asynchronous errors), the CPU calls the appropriate organization block (OB) for the error:

Error	Error OB
I/O redundancy error	OB70
CPU redundancy error	OB72
Time error	OB80
Power supply error	OB81
Diagnostic interrupt	OB82
Insert/remove module interrupt	OB83
CPU hardware fault	OB84
Priority class error	OB85
Rack failure or failure of a station in the distributed I/O	OB86
Communication error	OB87
Programming error	OB121
I/O access error	OB122

If the appropriate OB is not available, the CPU goes into STOP mode (exceptions: OB70, OB72, OB81, OB87). Otherwise, it is possible to store instructions in the OB as to how it should react to this error situation. This means the effects of an error can be reduced or eradicated.

Basic Procedure

Creating and Opening the OB

1. Display the module information for your CPU.
2. Select the "Performance Data" tab.
3. Decide on the basis of the list displayed whether the OB you want to program is permitted for this CPU.
4. Insert the OB in the "Blocks" folder of your program and open the OB.
5. Enter the program for handling the error.
6. Download the OB to the programmable controller.

Programming Measures for Handling Errors

1. Evaluate the local data of the OB to determine the exact cause of the error.
   The variables OB8xFLTID and OB12xSWFLT in the local data contain the error code. Their meaning is described in the "System and Standard Functions Reference Manual."
2. Branch to the program segment which reacts to this error.

You will find an example of handling diagnostic interrupts in the reference online help on System and Standard Functions under the heading "Example of Module Diagnostics with SFC51 (RDSYSST)."

You can find detailed information on OBs, SFBs, and SFCs in the corresponding Help on Blocks.

23.9.1 Evaluating the Output Parameter RET_VAL

Using the RET_VAL output parameter (return value), a system function indicates whether or not the CPU was able to execute the SFC function correctly

Error Information in the Return Value

The return value is of the integer data type (INT). The sign of an integer indicates whether it is a positive or negative integer. The relationship of the return value to the value "0" indicates whether or not an error occurred while the function was being executed (see table):

- If an error occurs while the function is being executed, the return value is less than "0." The sign bit of the integer is "1."
- If the function is executed free of errors, the return value is greater than or equal to "0." The sign bit of the integer is "0."

Processing of the SFC by the CPU	Return Value	Sign of the Integer
Error occurred	Less than "0"	Negative (sign bit is "1")
No error	Greater than or equal to "0"	Positive (sign bit is "0")

Reacting to Error Information

If an error occurs while an SFC is being executed, the SFC provides an error code in the return value (RET_VAL).

A distinction is made between the following:

- A general error code that all SFCs can output and
- A specific error code that the SFC can output depending on its specific function.

Transferring the Function Value

Some SFCs also use the output parameter RET_VAL to transfer the function value, for example, SFC64 TIME_TCK transfers the system time it has read using RET_VAL.

You can find more detailed information on the output parameter RET_VAL in the Help on SFBs/SFCs.

23.9.2 Error OBs as a Reaction to Detected Errors

Detectable Errors

The system program can detect the following errors:

- CPU functioning incorrectly
- Error in the system program execution
- Errors in the user program
- Error in the I/Os

Depending on the type of error, the CPU is set to STOP mode or an error OB is called.

Programming Reactions

You can design programs to react to the various types of errors and to determine the way in which the CPU reacts. The program for a particular error can then be saved in an error OB. If the error OB is called, the program is executed.

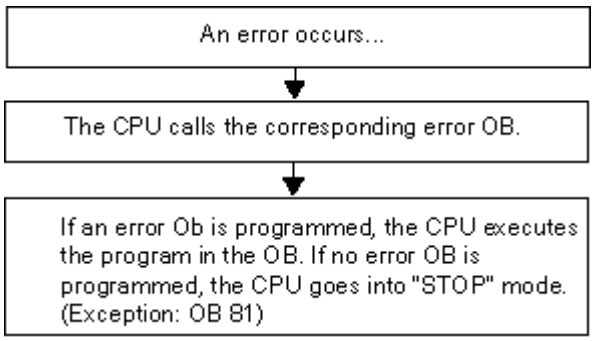

Error OBs

A distinction is made between synchronous and asynchronous errors as follows:

- Synchronous errors can be assigned to an MC7 instruction (for example, load instruction for a signal module which has been removed).
- Asynchronous errors can be assigned to a priority class or to the entire programmable logic controller (for example, cycle time exceeded).

The following table shows what types of errors can occur. Refer to your "S7-300 Programmable Controller, Hardware and Installation Manual" or the "S7-400 Programmable Controller, Hardware and Installation Manual" for information as to whether your CPU provides the specified OBs.

Error Class	Error Type	OB	Priority
Redundancy	I/O redundancy error (only in H CPUs)	OB 70	25
	CPU redundancy error (only in H CPUs)	OB 72	28
Asynchronous	Time error	OB 80	26
	Power supply error	OB 81	(or 28 if the error OB is called
	Diagnostic Interrupt	OB 82	in the startup program)
	Insert/remove module interrupt	OB 83	
	CPU hardware fault	OB 84	
	Program sequence error	OB 85	
	Rack failure	OB 86	
	Communication error	OB 87	
Synchronous	Programming error	OB 121	Priority of the OB that caused the error
	I/O access error	OB 122	

Example of Using Error OB81

Using the local data (start information) of the error OB, you can evaluate the type of error that has occurred.

If, for example, the CPU detects a battery error, the operating system calls OB81 (see figure).

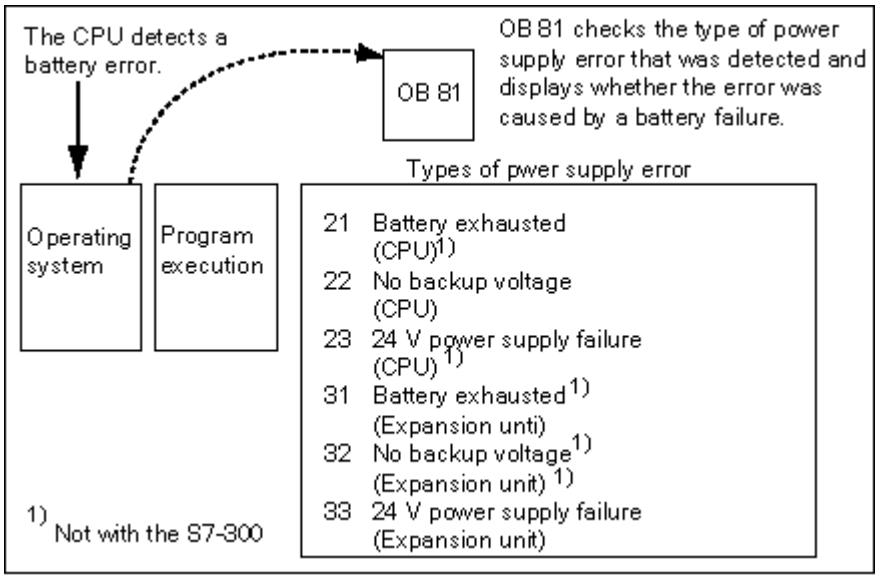

You can write a program that evaluates the event code triggered by the OB81 call. You can also write a program that brings about a reaction, such as activating an output connected to a lamp on the operator station.

Local Data of Error OB81

The following table shows the temporary variables that must be declared, in this case, in the variable declaration table of OB81.

The symbol *Battery error* (BOOL) must be identified as an output (for example, Q 4.0) so that other parts of the program can access these data.

Decl.	Name	Type	Description
TEMP	OB81EVCLASS	BYTE	Error class/error identifier 39xx
TEMP	OB81FLTID	BYTE	Error code: b#16#21 = At least one backup battery of the CPU is exhausted [1)] b#16#22 = No backup voltage in the CPU b#16#23 = Failure of the 24-V power supply in the CPU [1] b#16#31 = At least one backup battery of an expansion rack is exhausted [1)] b#16#32 = Backup voltage not present in an expansion rack [1] b#16#33 = Failure of the 24-V power supply of an expansion rack [1)]
TEMP	OB81PRIORITY	BYTE	Priority class = 26/28
TEMP	OB81OBNUMBR	BYTE	81 = OB81
TEMP	OB81RESERVED1	BYTE	Reserved
TEMP	OB81RESERVED2	BYTE	Reserved
TEMP	OB81_RACK_CPU	WORD	Bits 0 to 7: B#16#00 Bits 8 to 15: on a standard CPU: B#16#00, on an H CPU: bits 8 to 10 rack number, bit 11: 0=reserve CPU, 1=master-CPU, bits 12 to 15: 1111
TEMP	OB81RESERVED3	BYTE	Only relevant for error codes B#16#31, B#16#32, B#16#33
TEMP	OB81RESERVED4	BYTE	
TEMP	OB81RESERVED5	BYTE	
TEMP	OB81RESERVED6	BYTE	
TEMP	OB81DATETIME	DATEAND TIME	Date and time at which the OB was started
[1)] = Not with the S7-300.			

Sample Program for the Error OB81

The sample STL program shows how you can read the error code in OB81.

The program is structured as follows:

- The error code in OB81 (OB81FLTID) is read and compared with the value of the event "battery exhausted" (B#16#3921).
- If the error code corresponds to the code for "battery exhausted," the program jumps to the label Berr and activates the output *batteryerror*.
- If the error code does not correspond to the code for "battery exhausted," the program compares the code with the code for "battery failure".
- If the error code corresponds to the code for "battery failure," the program jumps to the label Berr and activates the output *batteryerror*. Otherwise the block is terminated.

STL	Description
L B#16#21	// Compare event code "battery exhausted"
	//(B#16#21) with
L #OB81_FLT_ID	// the error code for OB81.
==I	// If the same (battery is exhausted),
	// jump to Berr.
JC Berr	
L B#16#22	// Compare event code "battery failure"
	//(b#16#22) with
==I	// the error code for OB81.
JC BF	// If the same, jump to Berr.
BEU	// No message about battery failure
Berr: L B#16#39	// Compare the ID for the next event with
L #OB81_EV_CLASS	// the error code for OB81.
==I	// If a battery failure or an exhausted //battery is found,
S batteryerror	// set the output "battery error."
	// (Variable from the symbol table)
L B#16#38	// Compare the ID for the concluding event //with
==I	// the error code for OB81.
R batteryerror	// reset the output "battery error, when
	// the error is fixed.

You can find detailed information on OBs, SFBs, and SFCs, as well as an explanation of event IDs, in the corresponding Help on Blocks.

23.9.3 Inserting Substitute Values for Error Detection

With certain types of error (for example, a wire break affecting an input signal), you can supply substitute values for values that are not available due to the error. There are two ways in which you can supply substitute values:

- You can assign substitute values for configurable output modules using STEP 7. Output modules that cannot have parameters assigned have the default substitute value 0.
- Using SFC44 RPLVAL, you can program substitute values in error OBs (only for input modules).

For all load instructions that lead to synchronous errors, you can specify a substitute value for the accumulator content in the error OB.

Sample Program for Substituting a Value

In the following sample program, a substitute value is made available in SFC44 RPLVAL. The following figure shows how OB122 is called when the CPU recognizes that an input module is not reacting.

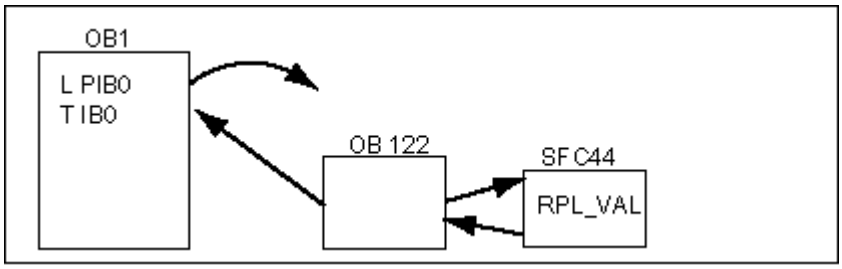

In this example, the substitute value in the following figure is entered in the program so that the program can continue to operate with feasible values.

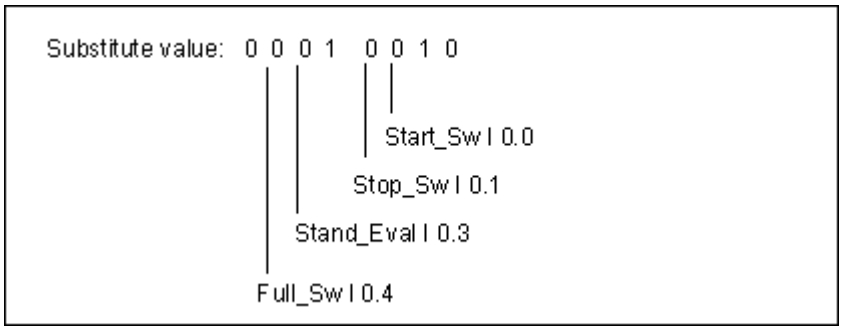

If an input module fails, the processing of the statement L PIB0 produces a synchronous error and starts OB122. As standard, the load instruction reads in the value 0. With SFC44, however, you can define any substitute value suitable for the process. The SFC replaces the accumulator content with the specified substitute value.

The following sample program could be written in OB122. The following table shows the temporary variables that must be declared, in this case, in the variable declaration table of OB122.

Decl.	Name	Type	Description
TEMP	OB122EVCLASS	BYTE	Error class/error ID 29xx
TEMP	OB122SWFLT	BYTE	Error code: 16#42, 16#43, 16#44 [1], 16#45 [1]
TEMP	OB122PRIORITY	BYTE	Priority class = priority of the OB in which the error occurred
TEMP	OB122OBNUMBR	BYTE	122 = OB122
TEMP	OB122BLKTYPE	BYTE	Block type in which the error occurred
TEMP	OB122MEMAREA	BYTE	Memory area and type of access
TEMP	OB122MEMADDR	WORD	Address in the memory at which the error occurred
TEMP	OB122BLKNUM	WORD	Number of the block in which the error occurred
TEMP	OB122PRGADDR	WORD	Relative address of the instruction that caused the error
TEMP	OB122DATETIME	DATEANDTIME	Date and time at which the OB was started
TEMP	Error	INT	Saves the error code of SFC44

[1] Not with the S7-300.

STL			Description
	L	B#16#2942	Compare the event code of OB122 with the event code (B#16#2942) for the acknowledgement of a time error when reading the I/O. If the same, jump to "Aerr".
	L	#OB122SWFLT	
	==I		
	JC	Aerr	Compare the event code of OB122 with the event code (B#16#2943) for an addressing error (writing to a module that does not exist). If not the same, jump to "Stop."
	L	B#16#2943	
	<> I		
	JC Stop		Label "Aerr": transfers DW#16#2912 (binary 10010) to SFC44 (REPL_VAL). SFC44 loads this value in accumulator 1 (and substitutes the value that triggered the OB122 call). The SFC error code is saved in #Error.
Aerr:	CALL "REPL_VAL"		
	VAL : = DW#16#2912		
	RETVAL : = #Error		Compare #Error with 0 (if the same, no error occurred when executing OB122). End the block if no error occurred.
	L	#Error	
	L	0	"Stop" label: calls SFC46 "STP" and changes the CPU to STOP mode.
	==I		
	BEC		
Stop:	CALL "STP"		

23.9.4 I/O Redundancy Error (OB70)

Description

The operating system of a H CPU calls OB70 if a loss of redundancy occurs on the PROFIBUS DP (for example, if there is a bus failure on the active DP master or an error in the DP slave interface module) or if the active DP master changes from DP slaves with switched I/Os.

Programming OB70

You must create OB70 as an object in your S7 program using STEP 7. Write the program to be executed in OB70 in the generated block and download it to the CPU as part of your user program.

You can use OB70, for example, for the following purposes:

- To evaluate the start information of OB70 and determine which event triggered the loss of I/O redundancy.
- To determine the status of your system using SFC51 RDSYSST (SZLID=B#16#71).

The CPU does not change to STOP mode if an I/O redundancy error occurs and OB70 is not programmed.

If OB70 is downloaded and the H system is not in redundant mode, OB70 is processed in both CPUs. The H system remains in redundant mode.

You can find detailed information on OBs, SFBs, and SFCs in the corresponding Help on Blocks.

23.9.5 CPU Redundancy Error (OB72)

Description

The operating system of the H CPU calls OB72 if one of the following events occurs:

- Loss of redundancy on the CPUs
- Comparison error (for example, RAM, PIQ)
- Standby-master switchover
- Synchronization error
- Error in a SYNC submodule
- Update process aborted
- OB72 is executed by all CPUs which are in RUN mode or STARTUP mode after an accompanying start event.

Programming OB72

You must create OB72 as an object in your S7 program using STEP 7. Write the program to be executed in OB72 in the generated block and download it to the CPU as part of your user program.

You can use OB72, for example, for the following purposes:

- To evaluate the start information of OB72 and determine which event triggered the loss of CPU redundancy.
- To determine the status of your system using SFC51 RDSYSST (SZLID=B#16#71).
- To react to the loss of CPU redundancy specifically for the plant.

The CPU does not change to STOP mode if a CPU redundancy error occurs and OB72 is not programmed.

You can find detailed information on OBs, SFBs, and SFCs in the corresponding Help on Blocks.

23.9.6 Time Error (OB80)

Description

The operating system of the CPU calls OB80 when a time error occurs. Time errors include the following, for example:

- Maximum cycle time exceeded
- Time-of-day interrupts skipped by moving the time forward
- Delay too great when processing a priority class

Programming OB80

You must create OB80 as an object in your S7 program using STEP 7. Write the program to be executed in OB80 in the generated block and download it to the CPU as part of your user program.

You can use OB80, for example, for the following purposes:

- To evaluate the start information of OB80 and to determine which time-of-day interrupts were skipped.
- By including SFC29 CANTINT, you can deactivate the skipped time-of-day interrupt so that it is not executed and only time-of-day interrupts relative to the new time will be executed.

If you do not deactivate skipped time-of-day interrupts in OB80, the first skipped time-of-day interrupt is executed, all others are ignored.

If you do not program OB80, the CPU changes to STOP mode when a time error is detected.

You can find detailed information on OBs, SFBs, and SFCs in the corresponding Help on Blocks.

23.9.7 Power Supply Error (OB81)

Description

The operating system of the CPU calls OB81 if one of the following fails in a CPU or an expansion unit

- The 24-V voltage supply
- A battery
- The complete backup

This OB is also called when the problem has been eliminated (the OB is called when an event comes and goes).

Programming OB81

You must create OB81 as an object in your S7 program using STEP 7. Write the program to be executed in OB81 in the generated block and download it to the CPU as part of your user program.

You can, for example, use OB81 for the following purposes:

- To evaluate the start information of OB81 and determine which power supply error has occurred.
- To find out the number of the rack with the defective power supply.
- To activate a lamp on an operator station to indicate that maintenance personnel should replace a battery.

If you do not program OB81, the CPU does not change to STOP mode if a power supply error is detected. The error is, however, entered in the diagnostic buffer and the corresponding LED on the front panel indicates the error.

You can find detailed information on OBs, SFBs, and SFCs in the corresponding Help on Blocks.

23.9.8 Diagnostic Interrupt (OB82)

Description

The operating system of the CPU calls OB82 when a module with diagnostics capability on which you have enabled the diagnostic interrupt detects an error and when the error is eliminated (the OB is called when the event comes and goes).

Programming OB82

You must create OB82 as an object in your S7 program using STEP 7. Write the program to be executed in OB82 in the generated block and download it to the CPU as part of your user program.

You can, for example, use OB82 for the following purposes:

- To evaluate the start information of OB82.
- To obtain exact diagnostic information about the error that has occurred.

When a diagnostic interrupt is triggered, the module on which the problem has occurred automatically enters 4 bytes of diagnostic data and their start address in the start information of the diagnostic interrupt OB and in the diagnostic buffer. This provides you with information about when an error occurred and on which module.

With a suitable program in OB82, you can evaluate further diagnostic data for the module (which channel the error occurred on, which error has occurred). Using SFC51 RDSYSST, you can read out the module diagnostic data and enter this information in the diagnostic buffer with SFC52 WRUSRMSG. You can also send a user-defined diagnostic message to a monitoring device.

If you do not program OB82, the CPU changes to STOP mode when a diagnostic interrupt is triggered.

You can find detailed information on OBs, SFBs, and SFCs in the corresponding Help on Blocks.

23.9.9 Insert/Remove Module Interrupt (OB83)

Description

S7-400 CPUs monitor the presence of modules in the central rack and expansion racks at intervals of approximately 1 second.

After the power supply is turned on, the CPU checks whether all the modules listed in the configuration table created with STEP 7 are actually inserted. If all the modules are present, the actual configuration is saved and is used as a reference value for cyclic monitoring of the modules. In each scan cycle, the newly detected actual configuration is compared with the previous actual configuration. If there are discrepancies between the configurations, an insert/remove module interrupt is signaled and an entry is made in the diagnostic buffer and the system status list. In RUN mode, the insert/remove module interrupt OB is started.

Note

Power supply modules, CPUs, and IMs must not be removed in RUN mode.

Between removing and inserting a module, at least two seconds must be allowed to pass so that the CPU can detect that a module has been removed or inserted.

Assigning Parameters to a Newly Inserted Module

If a module is inserted in RUN mode, the CPU checks whether the module type of the new module matches the original module. If they match, the module is assigned parameters. Either the default parameters or the parameters you assigned with STEP 7 are transferred to the module.

Programming OB83

You must create OB83 as an object in your S7 program using STEP 7. Write the program to be executed in OB83 in the generated block and download it to the CPU as part of your user program.

You can use OB83, for example, for the following purposes:

- To evaluate the start information of OB83.
- By including system functions SFC55 to 59, to assign parameters to a newly inserted module.

If you do not program OB83, the CPU changes from RUN to STOP when an insert/remove module interrupt occurs.

You can find detailed information on OBs, SFBs, and SFCs in the corresponding Help on Blocks.

23.9.10 CPU Hardware Fault (OB84)

Description

The operating system of the CPU calls OB84 when an error is detected on the interface to the MPI network, to the communication bus, or to the network card for the distributed I/Os; for example, if an incorrect signal level is detected on the line. The OB is also called when the error is eliminated (the OB is called when the event comes and goes).

Programming OB84

You must create OB84 as an object in your S7 program using STEP 7. Write the program to be executed in OB84 in the generated block and download it to the CPU as part of your user program.

You can use OB84, for example, for the following purposes:

- To evaluate the start information of OB84.
- By including system function SFC52 WRUSMSG to send a message to the diagnostic buffer.

If you do not program OB84, the CPU changes to STOP mode when a CPU hardware fault is detected.

You can find detailed information on OBs, SFBs, and SFCs in the corresponding Help on Blocks.

23.9.11 Program Sequence Error (OB85)

Description

The operating system of the CPU calls OB85:

- When a start event for an interrupt OB exists but the OB cannot be executed because it has not been downloaded to the CPU.
- When an error occurs accessing the instance data block of a system function block.
- When an error occurs updating the process image table (module configured but does not exist or module configured but defective).

Programming OB85

You must create OB85 as an object in your S7 program using STEP 7. Write the program to be executed in OB85 in the generated block and download it to the CPU as part of your user program.

You can use OB85, for example, for the following purposes:

- To evaluate the start information of OB85 and determine which module is defective or not inserted (the module start address is specified).
- By including SFC49 LGCGADR to find out the slot of the module involved.

If you do not program OB85, the CPU changes to STOP mode when a priority class error is detected.

You can find detailed information on OBs, SFBs, and SFCs in the corresponding Help on Blocks.

23.9.12 Rack Failure (OB86)

Description

The operating system of the CPU calls OB86 when it has detected one of the following events:

- Failure of a central expansion rack (not for S7-300) such as a broken connecting line, distributed power failure on a rack
- Failure of a master system or a slave (PROFIBUS DP) or failure of an IO system or an IO device (PROFINET IO)

OB86 is also called when the error is eliminated (the OB is called when the event comes and goes).

Programming OB86

You must create OB86 as an object in your S7 program using STEP 7. Write the program to be executed in OB86 in the generated block and download it to the CPU as part of your user program.

You can use OB86, for example, for the following purposes:

- To evaluate the start information of OB86 and determine which rack is defective or missing.
- To enter a message in the diagnostic buffer with system function SFC 52 WRUSMSG and to send the message to a monitoring device.

If you do not program OB86, the CPU changes to STOP mode when a rack failure is detected.

You can find detailed information on OBs, SFBs, and SFCs in the corresponding Help on Blocks.

23.9.13 Communication Error (OB87)

Description

The operating system of the CPU calls OB87 when a communication error occurs in data exchange using communication function blocks or in global data communication, for example:

- When receiving global data, an incorrect frame ID was detected
- The data block for the status information of the global data does not exist or is too short.

Programming OB87

You must create OB87 as an object in your S7 program using STEP 7. Write the program to be executed in OB87 in the generated block and download it to the CPU as part of your user program.

You can use OB87, for example, for the following purposes:

- To evaluate the start information of OB87.
- To create a data block if the data block for the status information of global data communication is missing.

The CPU does not change to "STOP" mode when a communication error is detected and OB87 is not programmed.

You can find detailed information on OBs, SFBs, and SFCs in the corresponding Help on Blocks.

23.9.14 Programming Error (OB121)

Description

The operating system of the CPU calls OB121 when a programming error occurs, for example:

- Addressed timers do not exist.
- A called block is not loaded.

Programming OB121

You must create OB121 as an object in your S7 program using STEP 7. Write the program to be executed in OB121 in the generated block and download it to the CPU as part of your user program.

You can use OB121, for example, for the following purposes:

- To evaluate the start information of OB121.
- To enter the cause of an error in a message data block.

If you do not program OB121, the CPU changes to STOP mode when a programming error is detected.

You can find detailed information on OBs, SFBs, and SFCs in the corresponding Help on Blocks.

23.9.15 I/O Access Error (OB122)

Description

The operating system of the CPU calls OB122 when a STEP 7 instruction accesses an input or output of a signal module to which no module was assigned at the last warm restart, for example:

- Errors with direct I/O access (module defective or missing)
- Access to an I/O address that is not known to the CPU.

Programming OB122

You must create OB122 as an object in your S7 program using STEP 7. Write the program to be executed in OB122 in the generated block and download it to the CPU as part of your user program.

You can use OB122, for example, for the following purposes:

- To evaluate the start information of OB122
- To call the system function SFC 44 and supply a substitute value for an input module so that program execution can continue with a meaningful, process-dependent value.

If you do not program OB122, the CPU changes to STOP mode when an I/O access error is detected.

You can find detailed information on OBs, SFBs, and SFCs in the corresponding Help on Blocks.

23.10 System Diagnostics with 'Report System Error'

23.10.1 Graphical Output of Diagnostic Events

To graphically output diagnostic events to an HMI device, you can create a PROFIBUS DP DB (DB 125 by default) or a PROFINET IO DB (DB 126 by default).

23.10.2 Diagnostic Status

23.10.2.1 Overview of the Diagnostic Status

You can configure the generation of blocks with 'Report system error', so that the generated data blocks can be supplied with the current status of PROFIBUS master systems or PROFINET IO systems.

- The PROFIBUS DP DB (DB125) supports the status of PROFIBUS slaves on DP master systems (1), ..., (32).
- The PROFINET IO DB (DB126) supports the status of IO device on IO systems (100), ..., (115) and the status of DP slaves on DP master systems (2980ff) downstream from an IE/PB Link.
- The diagnostic status DB (DB127) supports the status of racks, central modules, PROFIBUS slaves and IO devices.

23.10.2.2 PROFIBUS Diagnostic Status

Interface for the PROFIBUS DP DB

The generated data block depicts the current status of all configured stations in the current DP master system. If desired, it can describe the status of all DP slaves more exactly. The data block is dynamically created and depends on the HW configuration. The DB uses the RSE diagnostics FB (by default, FB49) to access the diagnostics data. This FB enters the current status of the DP slaves directly in the PROFIBUS DB.

During processing of the PROFIBUS DB, all interrupts are delayed.

For information on the supported interfaces, refer to the Readme file.

Note

The master system of an IE/PB link cannot be diagnoses. The diagnostics is performed via the PROFINET IO DB.

"MANUAL" mode

In this mode all errors in the selected station are shown in sequence.

"AUTOMATIC" mode

In this mode all the errors in all configured stations are shown in sequence.

Static variable area

Address	Name	Data type	Description
0	DP_MASTERSYSTEM	INT	Number of the DP master system
2.0	EXTERNAL_DP_INTERFACE	BOOL	External DP interface (CP/IM)
2.1	MANUAL_MODE	BOOL	Operating mode
2.2	SINGLE_STEP_SLAVE	BOOL	Switch to the next affected station
2.3	SINGLE_STEP_ERROR	BOOL	Switch to the next error
2.4	RESET	BOOL	DP master system (number and interface) are applied; everything is reinitialized
2.5	SINGLE_DIAG	BOOL	DP_Slave individual diagnostics
3	SINGLE_DIAG_ADR	BYTE	DP_Slave address for individual diagnostics
4.0	ALL_DP_SLAVES_OK	BOOL	Group display showing whether all DP slaves are operating correctly
5	SUM_SLAVES_DIAG	BYTE	Number of affected stations (faulty or failed)
6	SLAVE_ADR	BYTE	Station number of current station
7	SLAVE_STATE	BYTE	Status of the station:0:OK 1:Failed 2:Faulty 3:Not configured/cannot be diagnosed
8	SLAVE_IDENT_NO	WORD	PROFIBUS identification number
10	ERROR_NO	BYTE	Current error number
11	ERROR_TYPE	BYTE	1: Rack diagnostics (general info) 2: Submodule status 3: Channel diagnostics as per DP standard 4: S7 diagnostics (DS0/DS1) 5: Device diagnostics (manufacturer-specific) 6: Line diagnostics (diagnostic repeater) 7: Decoded device diagnostics
12	MODULE_NO	BYTE	Slot number.
13	CHANNEL_NO	BYTE	Channel number.
14	CHANNEL_TYPE	BYTE	Channel type
15	CHANNEL_ERROR_CODE	BYTE	Error code
16	CHANNEL_ERROR_INFO_1	DWORD	Channel error, code 1
20	CHANNEL_ERROR_INFO_2	DWORD	Channel error, code 2

Address	Name	Data type	Description
24	DIAG_COUNTER	BYTE	Total of a diagnostic for the displayed stations.
25.0	DIAG_OVERFLOW	BOOL	Diagnostic overflow
25.1	BUSY	BOOL	Evaluation in progress
932 - 1176	DIAG_DAT_NORM	BYTE [1..244]	Slave diagnostic data
1176 - 1191	CONFIG_SLAVES	DWORD [1..4]	Configured slaves
1192 - 1207	EXIST_SLAVES	DWORD [1..4]	Existing (addressable) slaves
1208 - 1223	FAILED_SLAVES	DWORD [1..4]	Failed slaves
1224 - 1239	FAULTY_SLAVES	DWORD [1..4]	Faulty slaves
1240 - 1255	AFFECT_SLAVES	DWORD [1..4]	Affected slaves (faulty or failed)
1256 - 1271	AFFECT_SLAVES_MEM	DWORD [1..4]	Affected slaves stored (internal)
1272 - 1397	DIAG_CNT	BYTE [1..126]	No. of diagnostic messages per slave
1404	ERROR_CAT	DWORD	Text lexicon ID of error text
1408	HELP_CAT	DWORD	Text lexicon ID of help text
1412	ERROR_NO	DWORD	Text ID in the text lexicon
1416	MAP_ERRORNO	WORD	Error ID in the export file
1418	MAP_HELPNO	WORD	Help text ID in the export file
1420	MASTERSTATUS_FAILED	BOOL [1..32]	True, if at least one station of the PROFIBUS master system (1 - 32) has failed
1424	MASTERSTATUS_FAULTY	BOOL [1..32]	True, if at least one station of the PROFIBUS master system (1 - 32) is disrupted

Status of the station in the overview:

Status	OK	Failed	Faulty	Not configured/cannot be diagnosed
Coding	0	1	2	3

23.10.2.3 Example of a DB 125 with a DP Slave

The following table shows an example of the assignment of DB125 in "Manual" mode.

DP_MASTERSYSTEM	INT	0	(last value used)
EXTERNAL_DP_INTERFACE	BOOL	2.0	Unused (last value used)
MANUAL_MODE	BOOL	2.1	TRUE
SINGLE_STEP_SLAVE	BOOL	2.2	Unused
SINGLE_STEP_ERROR	BOOL	2.3	Positive edge changes to next error
RESET	BOOL	2.4	Unused (except for positive edge)
SINGLE_DIAG	BOOL	2.4	Positive edge: read frame again
SINGLE_DIAG_ADR	BYTE	3.0	Station number (1 to 126)

23.10.2.4 Example of a Request for the PROFIBUS DP DB

You want to display all errors of master system 27 on an OP. This master system is plugged into an integrated interface.

The ET 200S station, PROFIBUS ID 15, diagnostic address 8190 has a channel error.

Query:

DP_MASTERSYSTEM	27
EXTERNAL_DP_INTERFACE	FALSE
RESET	to TRUE (positive edge)

Result:

ALL_DP_SLAVE_OK	FALSE: Problems have occurred
SUM_SLAVES_DIAG	1: A station is faulty
SLAVE_ADR	15: PROFIBUS address
SLAVE_STATE	2: faulty
SLAVE_IDENT_NO	W#16#80E0: ET 200S HF
ERROR_NO	1: First error
ERROR_TYPE	3: Channel diagnostics complying with DP standard
MODULE_NO	2
MODULE_STATE	0: Module is correct
CHANNEL_NO	2: Channel 2
CHANNEL_TYPE	2: Output
CHANNEL_ERROR_CODE	1: Short circuit
CHANNEL_ERROR_INFO_1	2: Short circuit
CHANNEL_ERROR_INFO_2	0
DIAG_COUNTER	3: 3 diagnostic interrupts have already been triggered
DIAG_OVERFLOW	FALSE
BUSY	FALSE

Variable	Bit address	Value	Explanation
CONFIG_SLAVES	1176 + 15 - 1 = 1192	TRUE	Station 15 is configured
EXIST_SLAVES	1192 + 15 – 1 = 1216	TRUE	Station 15 exists
FAILED_SLAVES	1208 + 15 – 1 = 1222	FALSE	Station 15 has not failed
FAULTY_SLAVES	1224 + 15 – 1 = 1238	TRUE	Station 15 is faulty
AFFECT_SLAVES	1240 + 15 – 1 = 1254	TRUE	Station 15 is affected
AFFECT_SLAVES_MEM	1256 + 15 – 1 = 1270	TRUE	Station 15 was affected
DIAG_CNT	1272 + (15-1) * 8 = 1384	B#16#3	3 Diagnostic interrupts

When the error is eliminated, the boxes are updated:

Result:

ALL_DP_SLAVE_OK TRUE: No problem occurred

SUM_SLAVES_DIAG 0: No station is faulty

Variable	Bit address	Value	Explanation
CONFIG_SLAVES	1176 + 15 - 1 = 1192	TRUE	Station 15 is configured
EXIST_SLAVES	1192 + 15 – 1 = 1216	TRUE	Station 15 exists
FAILED_SLAVES	1208 + 15 – 1 = 1222	FALSE	Station 15 has not failed
FAULTY_SLAVES	1224 + 15 – 1 =	FALSE	Station 15 is faulty
AFFECT_SLAVES	1240 + 15 - 1	FALSE	Station 15 is affected
AFFECT_SLAVES_MEM	1256 + 15 - 1	TRUE	Station 15 was affected
DIAG_CNT	1272 + (15-12) * 8	B#16#4	4 Diagnostic interrupts

23.10.2.5 PROFINET Diagnostic Status

Interface for the PROFINET IO DB

The generated data block depicts the current status of all configured devices. If desired, it can describe the status of a device more exactly in response to a query from an HMI device. The data block is dynamically created and depends on the HW configuration. The DB uses the RSE diagnostics FB (by default, FB49) to access the diagnostics data. This FB enters the current status of the devices directly in the DB.

Only one HMI device (e.g. OP, MP, PC) can access and modify the DB. If several HMI devices are connected, simultaneous access is blocked by the variable HMI_ID.

For information on the supported interfaces, refer to the Readme file.

Note

The diagnostics downstream from an IE/PB link is restricted.

Static variable area

Address	Name	Data Type	Description
0	HMI_ID	WORD	No. of OP that uses the DB (0 = unused)
2	System_No	WORD	No. of IO system to be evaluated
4	Device_No	WORD	No. of IO device to be evaluated
6.0	Enable	BOOL	Retrieves the error from the specified device
6.1	Next_Error	BOOL	Retrieves the next error from the same device
6.2	Busy	BOOL	Busy = 1; evaluation running
6.3	More_Errors	BOOL	There are more error messages present
7	Device_Status	BYTE	Status of affected device
8	Offset_System_Header	WORD	Address of Detail_IO_Sys[n] in the system being evaluated
10	Offset_System_Array	WORD	Address of IO_Sys[n] in the system being evaluated
12	Vendor_ID	WORD	Vendor ID; filled if supported by the CPU
14	Device_ID	WORD	Device ID; filled if supported by the CPU
16	Error_Level	BYTE	Error level 1=IO Device, 2=Module, 3=Submodule, 4=Channel
17		BYTE	Reserved
18	Module_No	WORD	No. of affected module
20	Submodule_No	WORD	No. of affected submodule
22	Channel_No	WORD	No. of affected channel
24	Error_Cat	DWORD	Error category (lexicon ID)
28	Help_Cat	DWORD	Error category in Help lexicon
32	Error_No	DWORD	Error number (index in lexicon)
36	Map_ErrorNo	WORD	No. of the error text in the export table

Address	Name	Data Type	Description
38	Map_HelpNo	WORD	No. of the help text in the export table
40	Number_IO_Sys	WORD	No. of configured IO systems
42	Systems_Status	WORD	Overview of all IO systems

Dynamic variable area

	Name	Type	Comment
Once	Detail_IO_Sys	Struct[n]	Array of structures for each IO system
Each IO system	System_No	Word	System number
	Max_Num_Dev	Word	Maximum ID for the configured devices
	Offset	Word	Offset at start of field in bytes relative to Detail_IO_Sys
	Devices_Affected	Word	Number of affected devices
	Offset_Status	Word	Offset at start of field IO_Sys_Status in bytes independent of Detail_IO_Sys
Each device	IO_Sys_<n>	ARRAY OF WORD[n]	Status of the groups; 1 bit for 16 devices. The table is large enough to contain all configured devices (Max_Num_Dev).

Status of a device in the overview IO_Sys_<n>:

Status	OK	Faulty	Failed	Not configured
Coding (bit b+1, bit b)	00	01	10	11

Byte	N				N+1			
Bit	6-7	4-5	2-3	0-1	6-7	4-5	2-3	0-1
IO_Sys_<n>[0]: Device number	4	3	2	1	8	7	6	5
IO_Sys_<n>[1]: Device number	12	11	10	9	16	15	14	13
...								

Status of a device in the overview IO_Sys_Status_<n>:

Status	All devices in the group are OK or not configured.	At least one device in the group is faulty or has failed.
Coding	0	1

Byte	N			N+1		
Bit	7	...	0	7	...	0
IO_Sys_Status_<n>[0]: Device number	113-128	17-112	1 - 16	241 - 256	145 - 240	129 - 144
Group	8	2 - 7	1	16	10 - 15	9
...						

23.10.2.6 Example of a DB126 with an IO System 100 and Devices with Device Numbers 2, 3 and 4

Number_IO_Sys	W#16#1	Number of configured IO systems
Detail_IO_Sys [0] .System_No	W#16#64	System number
Detail_IO_Sys [0] .Max_Num_Dev	W#16#4	Maximum ID for the configured device
Detail_IO_Sys [0] .Offset	W#16#2E	Offset at the beginning of the IO_Sys_Status field in bytes relative to Detail_IO_Sys
Detail_IO_Sys [0] .Devices_Affected	W#16#0	Number of affected devices
IO_Sys_0	ARRAY [0..0] OF WORD	Status bar for IO system 100

Status:

Device 1	Not configured
Device 2	Faulty
Device 3	OK
Device 4	Not accessible

This has caused "Devices_Affected" to be changed:

Detail_IO_Sys [0] .Devices_Affected	W#16#2	Number of affected devices

The status bar is grouped as a bit field, 2 bits indicate the status of a device. Byte 50 looks as follows:

[11] [01] [00] [10]

23.10.2.7 Example of a Request for the PROFINET IO DB

You would like to call up the errors of device 50 on IO system 100 on the OP with HMI_ID 1. If the HMI_ID is "0", the DB is not being used by anyone and a request can be set up.

Request

HMI_ID	1
System_No	100
Device_No	50
Enable	TRUE
Next_Error	*

Because the module works asynchronously, you have to wait until Busy becomes "FALSE".

The result for an IO system 100 device 50 has two channel errors.

Result 1

Busy	FALSE
Offset_Sys_Header	42
Offset_Sys_Array	50
Vendor Id	0
Device Id	0
Device_Status	1
More_Errors	TRUE
Error_Level	4
…	
Map_HelpNr	16884

*: Fields with * are ignored.

23.10.2.8 Diagnostic Status DB

Interface for the Diagnostic Status DB

The generated data block (DB127) allows the system status of a configured components and any of its subcomponents to be queried.

This data block is required to support system diagnostics via the CPU Web server. As default, it is disabled; if, however, one CPU is configured on which the functionality is enabled, DB127 is enabled automatically by 'Report system error'.

Note

After restarting a Web server CPU, the module information is displayed with a delay. To reduce the waiting time, you can call the RSE diagnostics block in a cyclic interrupt OB with a short interval.

Static Variable Area

Address	Name	Data Type	Description
+0	**Directory**		
0	D_Version	WORD	Version that supports RSE
2	D_pGlobalState	WORD	Byte offset to start of "GlobalState" section
4	D_pQuery	WORD	Byte offset to start of "Query" section
6	D_pComponent	WORD	Byte offset to start of "Component" section
8	D_pError	WORD	Byte offset to start of "Error" section
10	D_pState	WORD	Byte offset to start of "State" section
12	D_pAlarm	WORD	Byte offset to start of "Alarm" section
14	D_pSub-Component	WORD	Byte offset to start of "Subcomponent" section
+16	**GlobalState**		
0	G_EventCount	WORD	ID of the last event (counter)
2.0	G_StartReporting	BOOL	Startup evaluation active

Address	Name	Data Type	Description
+20	**Query**		
0	Q_ClientID_User	DWORD	ID of the client; here, please use a value between 1 and 255. Make sure that different clients use different IDs.
4	Q_ClientID_Intern	DWORD	ID of the client (internal)
8.0	Q_WithSubComponent	BOOL	With/without status of the lower-level component (slower)
8.1	Q_SubComponentAlarm	BOOL	AS-i master returns AS-i slave alarms
8.2	Q_Reserved2	BOOL	Reserved
8.3	Q_Reserved3	BOOL	Reserved
8.4	Q_Reserved4	BOOL	Reserved
8.5	Q_Reserved5	BOOL	Reserved
8.6	Q_Reserved6	BOOL	Reserved
8.7	Q_Reserved7	BOOL	Reserved
9.0	Q_Start	BOOL	Start query
10.0	Q_Error	BYTE	Internal error in query
11.0	Q_Reserved8	BYTE	Reserved
+32	**Component**		
0	C_AddressMode	BYTE	Addressing mode of the module
1	C_Reserved1	BYTE	Reserved
2	C_ComponentID	WORD	Hardware ID of the component (internal)
+36	**Error**		
0	E_ErrorNo	WORD	Index of the requested/actual error
2.0	E_LastError	BOOL	Is set when E_ErrorNo is not equal to 0. Value TRUE if E_ErrorNo is the index of the last error, otherwise FALSE
2.1	E_Reserved	ARRAY [1..15] BOOL	Reserved

Address	Name	Data Type	Description
+40	**State**		
0	S_Hierarchy	BYTE	Reserved
1	S_Periphery	BYTE	Reserved
2.0	S_SupFault	BOOL	The component is unreachable
2.1	S_NotAvailable	BOOL	The component does not exist
2.2	S_Faulty	BOOL	The component is faulty; the "Alarm" section is not empty
2.3	S_MoreErrors	BOOL	There are more errors than RSE can store
2.4	S_Maintenance1	BOOL	Maintenance required is indicated
2.5	S_Maintenance2	BOOL	Maintenance demanded is indicated
2.6	S_Deactivated	BOOL	The component was deactivated *)
2.7	S_Reserved2	BOOL	Reserved
3.0	S_SubFault	BOOL	A subcomponent has a fault
3.1	S_SubMaintenance1	BOOL	Maintenance required is indicated for a subcomponent
3.2	S_SubMaintenance2	BOOL	Maintenance demanded is indicated for a subcomponent
3.3	S_SubDeactivated	BOOL	A subcomponent is deactivated
3.4	S_Reserved4	BOOL	Reserved
3.5	S_Reserved5	BOOL	Reserved
3.6	S_Reserved6	BOOL	Reserved
3.7	S_Reserved7	BOOL	Reserved
4.0	S_TIAMS	DWORD	Maintenance state of the component
8.0	S_TIAMSChannelExist	DWORD	Maintenance state: Configured channels
12.0	S_TIAMSChannelOK	DWORD	Maintenance state: Disrupted channels
16.0	S_ChannelCount	WORD	Number of channels; valid only when Q_WithSubComponent is set
18.0	S_ChannelVector	ARRAY [0..255] BOOL	List of channels affected; valid only when Q_WithSubComponent is set

Address	Name	Data Type	Description
+90	**Alarm**		
0	A_ComponentID	WORD	Hardware ID of the component (internal)
2	A_TextID1	WORD	ID of the first error text
4	A_TextLexikonID1	WORD	ID of the first error text lexicon
6	A_HelpTextLexikonID1	WORD	ID of the first help text lexicon
8	A_MapTextID	WORD	ID of the first error text in the export file (HMI)
10	A_MapHelpTextID	WORD	Reserved
12	A_TextID2	WORD	Reserved
14	A_TextLexikonID2	WORD	Reserved
16	A_HelpTextLexikonID2	WORD	Reserved
18	A_MapTextID2	WORD	Reserved
20	A_MapHelpTextID2	WORD	Reserved
22	A_AlarmID	DWORD	Message number
26	A_ValueCount	WORD	Number of other occupied bytes (12)
28	A_AssociatedValue	ARRAY [1..6]	Associated values of the message n = A_ValueCount / 2 (= 6)
+130	**SubComponent**		
0	U_SubComponentCount	WORD	Number of subcomponents
2	U_SubComponentFault	ARRAY [1..n] BOOL	List of subcomponents "n" depends on the configuration **)

*) If the component was deactivated, the index of the requested/actual error is not changed and "E_LastError" is set to "true". The variable area of the interrupt is also not filled in.

**) The list of subcomponents is valid only when Q_WithSubComponent is set. The ARRAY contains one status byte per configured component. For a master. the ARRAY contains the status of the configured stations sorted in ascending order according to the station ID. For a station, the ARRAY contains the status of the configured slots sorted in ascending order according to slot number. This array can contain up to a maximum of 4096 entries (for an IO system); only the actual maximum size is displayed.
The status byte per subcomponent is defined as follows:
Bit 0 = SubFault: the component cannot be reached
Bit 1 = Fault: the component is not available or has a fault
Bit 2 = Maintenance1: the component has signaled maintenance
Bit 3 = Maintenance2: the component has signaled maintenance
Bit 4 = Deactivated: The component was deactivated
Bit 5 = SubFault: a subcomponent is disrupted
Bit 6 = SubMaintenance1: a subcomponent has signaled maintenance
Bit 7 = SubMaintenance2: a subcomponent has signaled maintenance

23.10.2.9 Example of a Diagnostic Status DB Query

You want to see the errors of the central module with I/O address QB 50 on the OP. This module has two channels, channel 1 has signaled wire break.

You have selected the value "5" as the client ID.

Query

1. As long as Q_ClientID_Intern is not equal to DW#16#00000005,
   Q_ClientID_User := DW#16#00000005
2. If Q_ClientID_Intern is equal to DW#16#00000005
   Q_WithSubComponent := FALSE
   C_AddressMode := B#16#1
   C_ComponentID := W#16#8032
   E_ErrorNo := 1
   Q_Start := TRUE
3. Wait until Q_Start is set to FALSE
4. If Q_ClientID_Intern is not equal to DW#16#00000005,
   return to step 1
5. Read out the data:

S_SupFault	FALSE
S_NotAvailable	FALSE
S_Faulty	TRUE
S_MoreErrors	FALSE
S_Maintenance1	FALSE
S_Maintenance2	FALSE
S_SubFault	FALSE
S_SubMainenance1	FALSE
S_SubMaintenance2	FALSE
S_TIAMS	DW#16#00000007
S_TIAMSChannelExist	DW#16#00000003
S_TIAMSChannelOK	DW#16#FFFFFFFD
S_ChannelCount	W#16#2
A_ComponentID	W#16#8002
A_TextID1	W#16#8C06
A_TextLexikonID1	W#16#1
A_AlarmID	DW#32#60200032
A_ValueCount	W#16#C
A_AssociatedValue[1]	W#16#8C06
A_AssociatedValue[2]	W#16#1

A_AssociatedValue[3]	W#16#0
A_AssociatedValue[4]	W#16#0
A_AssociatedValue[5]	W#16#0
A_AssociatedValue[6]	W#16#8002
U_SubComponentCount	W#16#0
U_SubComponentFault[]	{FALSE}

6. Check the validity:
   If Q_ClientID_Intern is not equal to DW#16#00000005,
   return to step 1
7. The data can be evaluated. The DB is reinitialized automatically.

Example 2:

You want to call up the errors of the DP master system connected to the CP with diagnostic address E 16383 on an OP with the IP address 192.168.10.54. DP stations with PROFIBUS addresses 1, 48, 50 were configured. Station 1 is disrupted, station 48 is running problem-free and station 50 has failed.

Query

1. As long as Q_ClientID_Intern does not equal DW#16#00000005,
   Q_ClientID_User := DW#16#00000005
2. If Q_ClientID_Intern is equal to DW#16#00000005,
   Q_WithSubComponent := TRUE
   C_AddressMode := B#16#1
   C_ComponentID := W#16#3FFF
   E_ErrorNo := 0
   Q_Start := TRUE
3. Wait until Q_Busy is set to FALSE
4. If Q_ClientID_Intern is not equal to DW#16#00000005.
   return to step 1
5. Read out the data:
6.

S_SupFault	FALSE
S_NotAvailable	FALSE
S_Faulty	TRUE
S_MoreErrors	FALSE
S_Maintenance1	FALSE
S_Maintenance2	FALSE
S_SubFault	TRUE
S_SubMainenance1	FALSE

S_SubMaintenance2	FALSE
S_TIAMS	DW#16#0
S_TIAMSChannelExist	DW#16#0
S_TIAMSChannelOK	DW#16#0
S_ChannelCount	W#16#0
U_SubComponentCount	W#16#3
U_SubComponentFault[1]	TRUE
U_SubComponentFault[2]	FALSE
U_SubComponentFault[3]	TRUE

7.

8. Check the validity:
   If Q_ClientID_Intern is not equal to DW#16#00000005,
   return to step 1

9. The data can be evaluated. The DB is reinitialized automatically.

23.10.2.10 Importing Error and Help Texts

In order to be able to display error and help texts on HMI devices, these texts have to be imported into the device. For this reason, several export files are created in the specified export directory when generating 'Report System Error'. You can set the export directory in the ‘HMI Export Data’ field on the Diagnostics Support tab.

Because display options on HMI devices vary, several export files are created. These files differ in the maximum length of the texts contained, longer texts are respectively shortened to the maximum length. For this reason it is recommended that error and help texts be checked and adapted as necessary.

Name	Content
Other_Profibus40...csv	Error/help texts for PROFIBUS with a text length of 40 characters
Other_Profinet40...csv	Error/help texts for PROFINET with a text length of 40 characters
Other_Profibus80...csv	Error/help texts for PROFIBUS with a text length of 80 characters
Other_Profinet80...csv	Error/help texts for PROFINET with a text length of 80 characters
Other_Profibus256...csv	Error/help texts for PROFIBUS with a text length of 256 characters
Other_Profinet256...csv	Error/help texts for PROFINET with a text length of 256 characters

An identifier consisting of the project, station, and CPU is appended to the name of the file specified above. This allows you to export files for different CPUs to the same folder.

You have to rename the export file with the desired text length in '**other.csv**' and import it into the OP.

In the following cases, you have to import a new export data to the HMI device:

- Modified hardware configuration
- Modified settings of ‘Report System Error’

Display Language German (Liechtenstein) on the OP

The display language German (Liechtenstein) may not be set on the HMI because the error and help texts will otherwise not be properly displayed.

24 Printing and Archiving

24.1 Printing Project Documentation

Once you have finished creating the program for your automation task, you can print out all the important data for project documentation purposes using the print functions integrated in STEP 7.

Parts of the Project You Can Print

You can print the contents of objects both directly from the SIMATIC Manager and by opening the respective object and starting the print procedure.

The following parts of a project can be printed directly via the SIMATIC Manager:

- Object tree (structure of the project/library)
- Object lists (contents of an object folder)
- Object contents
- Messages

By opening the respective object, the following parts of a project can be printed:

- Blocks in Ladder Logic, Statement List, or Function Block Diagram representation or in other languages (optional software)
- Symbol table with the symbolic names for absolute addresses
- Configuration table with the arrangement of modules in the programmable controller and the module parameters
- Diagnostic buffer content
- Variable table with monitor formats, and monitor and modify values
- Reference data; such as cross-reference lists, assignment lists, program structures, lists of unused addresses, lists of addresses without symbols
- Global data table
- Module information with the module status
- Operator related texts (user texts and text libraries)
- Documents from optional packages such as other programming languages

DOCPRO Optional Package

To create, edit, and print standardized wiring manuals you can use the optional software package DOCPRO. This creates plant documentation that fulfils the DIN and ANSI standards.

24.1.1 Basic Procedure when Printing

To print, proceed as follows:

10. Open the appropriate object to display the information you want to print on the screen.
11. Open the "Print" dialog box using the menu command **File > Print** in the application window. Depending on which application you are in, the first entry in the menu bar may not be "File", but the object processed by the application, such as "Symbol Table."
12. If necessary, change the print options (printer, print range, number of copies etc.) in the dialog box and close it.

Some dialog boxes have a "Print" button, for example, the "Module Information" dialog box. Click this button to print the contents of the dialog box.

Blocks do not need to be opened. You can print them directly in the SIMATIC Manager using the menu command **File > Print**.

24.1.2 Print Functions

The following additional functions are available for printing print objects:

Print Objects	**Menu Command**	**Function**	**Function**	**Function**
		Print preview	Page setup, "Paper format" tab	Page setup, "Headers and Footers" tab
Blocks, STL source files	File > *	●	●	●
Module information		–	●	●
Global data table	GD Table> *	●	●	●
Configuration table	Station > *	●	●	●
Object, object folder	File > *	–	●	●
Reference data	Reference Data > *	●	●	●
Symbol table	Table > *	●	●	●
Variable table	Table > *	–	●	●
Connection table	Network > *	●	●	●
Operator related texts (user texts, text libraries)	Texts > *	●	●	●
* : The * symbol serves as a wildcard for the respective function in the menu command (e.g. print preview or page setup)				

Step-for-step instructions for printing the individual print objects can be found under:

- How to Print

Print Preview

You can use the "Print Preview" function to display the page layout of the document to be printed.

Note

The print format of the finished document is not displayed in the print preview.

Setting the Page Format and the Headers and Footers

You can set the paper size (such as A4, A5, Letter) and the page format and the orientation (portrait or landscape) for all documents that you want to print with the **File > Page Setup** menu command. In addition, you can select whether the settings should apply to the entire project only for the current session.

Adjust the layout of the document so that it matches the required paper format. If the document is too wide, the right-hand margin will be printed on a consecutive page.

If you select a page format with a margin (for example, A4 margin), the printed document has a margin on the left of the page that you can use to punch holes for binding.

To set headers and footers for the documents you want to print throughout the project or only for the current session, go to the "Labeling Fields" tab.

24.1.3 Special Note on Printing the Object Tree

In the "Print Object List" dialog box, in addition to the object list you can also print the object tree by selecting the option "Tree window."

If you select the option "All" under "Print range," the whole tree structure is printed. If you select the option button "Selection," the tree structure from the selected object downwards is printed.

Note

The settings made in the dialog box apply only to printing the list or tree and not for printing the contents of the objects; the settings in the relevant applications are used for this.

24.2 Archiving Projects and Libraries

24.2.1 Archiving Projects and Libraries

You can store individual projects or libraries in compressed form in an archive file. This compressed storage procedure is possible on a hard disk or on a portable data medium (such as a floppy disk).

Archive Programs

In STEP 7, you can use the archive program you prefer to archive projects. The archiving programs ARJ and PKZip ship with STEP 7 and are installed automatically. You will find the relevant descriptions in the installation paths of the archiving programs.

To use a specific archiving program, you require the following version (or newer):

- PKZip V12.4 (ships with STEP 7)
- WinZip (tested with Version 20)
- 7-Zip (tested with Version 9.20)
- ARJ V2.50a (only for retrieving, ships with STEP 7 (not for Windows 7/Server 2008))

Special Issues

If you used ARJ32 V3.x for archiving with previous STEP 7 versions, these archives may only be retrieved with ARJ32 V3.x.

Creating an archive with PKZip will take substantially more time on network drives than on local drives.

24.2.2 Uses for Saving/Archiving

Save As

With this function you create a **copy** of the project under another name.

You can use this function:

- To create backup copies
- To duplicate an existing project in order to adapt it for other purposes.

To use the fastest method of creating a copy, select the "Save As" option without rearranging in the dialog box. The whole file structure from the project directory down is copied without a check and saved under another name.

There must be sufficient space on the data medium to store the backup copy. Do not attempt to save projects to diskette as there will not generally be sufficient space available. To transport project data on diskette use the "Archive" function.

Saving with rearranging takes longer, but a message is displayed if an object cannot be copied and saved. Causes for this may be a missing optional package or defective data for an object.

Archive

You can store individual projects or libraries in compressed form in an archive file. This compressed storage procedure is possible on a hard disk or on a portable data medium (such as a floppy disk).

Only transport projects on diskette in the form of archive files. If the project is too large, select an archive program with which disk-crossing archives can be created.

Projects or libraries which were compressed into an archive file cannot be edited. If you want to edit them again you must unpack the data which means retrieving the project or library.

24.2.3 Requirements for Archiving

To archive a project or library, the following requirements must be fulfilled:

- You must have installed the archive program in your system. The link to STEP 7 is explained in the online help topic "Procedure for Archiving/Retrieving."
- All the data for the project without exception must be in the project directory or a subdirectory of the project. When working with the C development environment, it is possible to store data in other locations. These data would then not be included in the archive file.
- If you work with WinZip in MS Windows 7 and want to archive a multiproject, the destination directory must be neither selected nor open in the Explorer. You will find more information in the documentation of the archiving program.

24.2.4 Procedure for Archiving/Retrieving

You archive/retrieve your project or library using the menu command **File > Archive** or **File > Retrieve**.

Note

Projects or libraries which were compressed into an archive file cannot be edited. If you want to edit them again you must unpack the data which means retrieving the project or library.

When retrieving, the retrieved projects or libraries are automatically included in the project/library list.

Setting the Target Directory

To set the target directory, use the menu command **Options > Customize** in the SIMATIC Manager to open the "Customize" dialog box.

In the "Archive" tab of this dialog box you can switch the option "Check target directory on retrieval" on and off.

If this option is deactivated, the path set in the "General" tab of the same dialog box for "Storage location for projects" and "Storage location for libraries" is used as the target directory for retrieving.

Copying an Archive File to Diskette

You can archive a project/library and then copy the archive file to a diskette. It is also possible to select a floppy disk drive in the "Archive" dialog box as the target directory.

25 Tips and Tricks

25.1 Exchanging Modules in the Configuration Table

If you using HW Config to revise a station configuration and you want to exchange a module for one with a new order number for example, proceed as follows:

1. Use a drag-and-drop operation to drag the module from the Hardware Catalog window over the old module that is already placed.
2. Drop the new module. To the extent possible, the new module assumes the parameters of the one that was already inserted.

This procedure is faster than exchanging modules by deleting the old module and then inserting the new one and assigning parameters to it.

You can turn this function on or off in HW Config by means of the menu command **Options > Settings** ("Enable Module Swapping")

25.2 Projects with a Large Number of Networked Stations

If you configure all stations one after the other and then call NetPro by means of the menu command **Options > Configure Network** in order to configure connections, the stations are placed in the network view automatically. This procedure has the disadvantage that you then have to arrange the stations and subnets according to topological criteria later.

If your project includes a large number of networked stations and you want to configure connections between these stations, you should configure the system structure in the network view from the beginning to preserve the overview:

1. Create the new project in the SIMATIC Manager (menu command **File > New**).
2. Start NetPro (menu command **Options > Configure Network**)
3. Create in NetPro station for station as follows:
   - Use a drag-and-drop operation to place the station from the Catalog window.
   - Double-click the station to start HW Config.
   - Use a drag-and-drop operation to place the modules with communication capability (CPUs, CPs, FMs, IF modules) in HW Config.
   - If you want to network these modules, double-click on the corresponding rows in the configuration table to create new subnets and to network the interfaces.
   - Save the configuration and switch to NetPro.
   - In NetPro, position stations and subnets (move objects with the mouse until you have reached the position you want)
4. Configure the connections in NetPro and correct the networking where necessary.

25.3 Rearranging

If unexplained problems occur when working with STEP 7, it often helps to rearrange the database of the project or library.

Select the menu command **File > Rearrange** to do this. This removes any gaps which occur when contents are deleted, meaning that the amount of memory required for the project/library data is reduced.

The function optimizes the data storage for the project or library in a similar way to which a program defragments a hard disk also optimizes file storage on the hard disk.

The duration of the reorganization process depends on the amount of data to be moved around and may take some time. The function is therefore not executed automatically (for example, when you close a project) but must be triggered by the user when he/she wants to rearrange the project or library.

To check the extent to which the data management is being used, select the block folder and select the menu command **Edit > Object Properties**. The click the "Get fill level" button in the "Fill Level" tab. When the fill level has been calculated, the values and a recommendation for the reorganization of the project are displayed in the lower part of the tab.

Requirement

Projects and libraries can only be rearranged if no objects in them are being edited by other applications and therefore locked for access.

25.4 Editing Symbols Across Multiple Networks

The LAD/STL/FBD program editor lets you view and edit the symbols of multiple networks.

1. Select a network name with a click on the network name (e.g. "Network 1").
2. Hold down the CRTL key and add further networks to your selection.
3. Right-click to call the context-sensitive menu command **Edit Symbols**.

Use the shortcut CTRL+A to select all networks of a block and then highlight a network name.

25.5 Testing with the Variable Table

For monitoring and modifying variables in the variable table, note the following editing tips:

- You can enter symbols and addresses in both the "Symbol" column as well as the "Address" column. The entry is written into the appropriate column automatically.
- To display the modified value, you should set the trigger point for "Monitoring" to "Beginning of Scan Cycle" and the trigger point for Modifying" to "End of Scan Cycle."
- If you place the cursor in a row that is marked with red, brief information is displayed telling you the cause of the error. Press F1 to get suggestions for eliminating the error.
- You can enter only those symbols that are already defined in the symbol table.
  You must enter a symbol exactly as it is defined in the symbol table.
  Symbol names that contain special characters must be enclosed in quotation marks (for example, "Motor.Off," "Motor+Off," "Motor-Off").
- Warnings can be switched off in the "Online" tab ("Customize" dialog box).
- The connection can be changed without having previously disconnected the connection.
- The monitoring trigger can be defined while monitoring variables.
- You can modify selected variables by selecting the rows and executing the "Force" function. Only the highlighted variables are modified.
- Exiting without Confirmation:

  If you press the ESC key while "Monitoring," "Modifying" "Release PQ," "Monitoring" and "Modifying" are terminated without asking if you want to exit.
- Entering a Contiguous Address Range:

  Use the menu command Insert > Range of Variables.
- Displaying and Hiding Columns:

  Use the following menu commands to display or hide individual columns:
  Symbol: **View > Symbol**
  Symbol comment: **View > Symbol Comment**
  Presentation format of the status value: **View > Display Format**
  Status value of the variables: **View > Status Value**
  Modify value of the variables: **View > Modify Value**
- Changing the display format of several rows of the table at the same time:
  - Select the area of the table in which you want to change the display format by holding the left mouse button down and dragging across the desired table area.
  - Select the presentation with the menu command **View > Select Display Format**. The format is changed only for those rows of the selected table for which a format change is permitted.
- Input examples by means of the F1 key:
  - If you place the cursor in the address column and you press F1, you will get examples for address inputs.
  - If you place the cursor in the modify value column and you press F1, you will get examples for modify/force value inputs.

25.6 Modifying Variables With the Program Editor

In the program editor, you can program buttons for binary inputs and memory bits that offer you a quick and easy way to modify these addresses with mouse click.

Requirements

- In the symbol table, you have assigned this property to the address you want to modify via the menu command **Special Object Properties > Control at Contact**
- You have selected the "Control at Contact" option in the "General" tab of the LAD/STL/FBD program editor (Menu command **Options > Customize**).
- You have selected the menu command **Debug > Monitor**.

Triggering condition is here "permanent/at the cycle start".

The inputs actually available in your plant will be monitored for as long as you keep the button pressed. You can also modify multiple inputs via multiple selection (CTRL key).

In the case of bit memories or unavailable inputs, pressing the button will cause the status to be set to 1. The status will only be reset to 0 if this is explicitly requested through a shortcut menu entry or in the variable table, or if the address is reset by the STEP 7 program.

In the case of a non-negated input or bit memory, pressing the button will cause the modify value "1" to apply; in the case of a negated input or bit memory, the modify value "0" will apply.

Note on WinCC

If you have started the program editor in WinCC via the operator control and monitoring of a variable, only the control options of WinCC are allowed. Otherwise, if the operator has been granted "Maintenance rights" of WinCC, both modify options are allowed.

25.7 Virtual Work Memory

Another reason for problems occurring in STEP 7 may be insufficient virtual work memory.

To work with STEP 7 you should adjust the setting for the virtual memory.

If the virtual workplace has been manually modified on your PC, proceed as follows:

4. Open the Control Panel, for example, via the Start menu **Start > Control Panel** and double-click on the "System" icon.
5. Double-click on "Security and System" and select the "Advanced System Settings" entry and click on "Settings" in the "Performance" section of the displayed dialog.
6. Click the "Change" button in the "Advanced" tab.
7. Select the option "Automatically manage paging file size for all drives".

Note

As the virtual memory is on the hard disk (default C:) and dynamic, you should ensure that sufficient memory is available for the directory TMP or TEMP (approx. 20 to 30 MB):

- If the S7 project is also on the same partition on which the virtual memory is set, approximately twice the size of the S7 project should be available as free memory space.
- If the project is stored on another partition, this requirement becomes irrelevant.

26 Appendix

26.1 Operating Modes

26.1.1 Operating Modes and Mode Transitions

Operating Modes

Operating modes describe the behavior of the CPU at a particular point in time. Knowing the operating modes of CPUs is useful when programming the startup, testing the controller, and for troubleshooting.

The S7-300 and S7-400 CPUs can adopt the following operating modes:

- STOP
- STARTUP
- RUN
- HOLD

In STOP mode, the CPU checks whether all the configured modules or modules set by the default addressing actually exist and sets the I/Os to a predefined initial status. The user program is not executed in STOP mode.

In STARTUP mode, a distinction is made between the startup types "warm restart," "cold restart," and "hot restart:"

- In a warm restart, program processing starts at the beginning of the program with initial settings for the system data and user address areas (the non-retentive timers, counters, and bit memory are reset).
- In a cold restart, the process-image input table is read in and the STEP 7 user program is processed starting at the first command in OB1 (also applies to warm restart).
  - Any data blocks created by SFC in the work memory are deleted; the remaining data blocks have the preset value from the load memory.
  - The process image and all timers, counters, and bit memory are reset, regardless of whether they were assigned as retentive or not.
- In a hot restart, the program is resumed at the point at which it was interrupted (timers, counters, and bit memory are not reset). A hot restart is only possible on S7-400 CPUs.

In RUN mode, the CPU executes the user program, updates the inputs and outputs, services interrupts, and process error messages.

In HOLD mode, processing of the user program is halted and you can test the user program step by step. The HOLD mode is only possible when you are testing using the programming device.

In all these modes, the CPU can communicate via the multipoint interface (MPI).

Other Operating Modes

If the CPU is not ready for operation, it is in one of the following modes:

- Off, in other words, the power supply is turned off.
- Defective, in other words, a fault has occurred.
  To check whether the CPU is really defective, switch the CPU to STOP and turn the power switch off and then on again. If the CPU starts up, display the diagnostic buffer to analyze the problem. If the CPU does not start up it must be replaced.

Operating Mode Transitions

The following figure shows the operating modes and mode transitions for S7-300 and S7-400 CPUs:

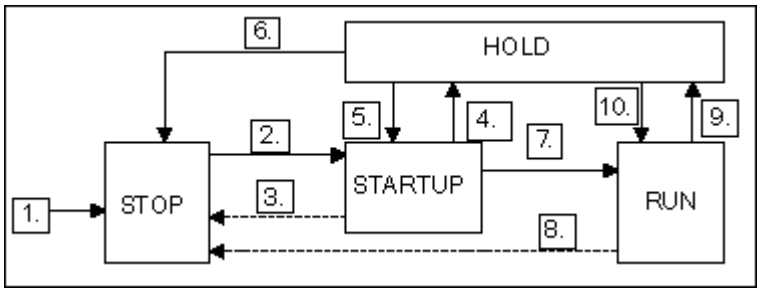

The table shows the conditions under which the operating modes can change.

Transition	Description
1.	After you turn on the power supply, the CPU is in STOP mode.
2.	The CPU changes to STARTUP mode: • After the CPU is changed to RUN or RUN-P using the key switch or by the programming device. • After a startup triggered automatically by turning on the power. • If the RESUME or START communication function is executed. In both cases the key switch must be set to RUN or RUN-P.
3.	The CPU changes back to STOP mode when: • An error is detected during the startup. • The CPU is changed to STOP by the key switch or on the programming device. • A stop command is executed in the startup OB. • The STOP communication function is executed.
4.	The CPU changes to HOLD mode when a breakpoint is reached in the startup program.
5.	The CPU changes to STARTUP mode when the breakpoint in a startup program was set and the "EXIT HOLD" command was executed (test functions).
6.	The CPU changes back to STOP mode when: • The CPU is changed to STOP with the key switch or by the programming device. • The STOP communication command is executed.
7.	If the startup is successful, the CPU changes to RUN.
8.	The CPU changes back to STOP mode when: • An error is detected in RUN mode and the corresponding OB is not loaded. • The CPU is changed to STOP by the key switch or on the programming device. • A stop command is edited in the user program. • The STOP communication function is executed.

Transition	Description
9.	The CPU changes to RUN mode when a breakpoint was set and the "EXIT HOLD" command is executed.
10.	The CPU changes to HOLD mode when a breakpoint is reached in the user program.

Operating Mode Priority

If a number of operating mode transitions is requested simultaneously, the operating mode with the highest priority is selected. If, for example, the mode selector is set to RUN and you attempt to set the CPU to STOP at the programming device, the CPU will change to STOP because this mode has the highest priority.

Priority	Mode
Highest	STOP
	HOLD
	STARTUP
Lowest	RUN

26.1.2 STOP Mode

The user program is not executed in STOP mode. All the outputs are set to substitute values so that the controlled process is in a safe state. The CPU makes the following checks:

- Are there any hardware problems(for example, modules not available)?
- Should the default setting apply to the CPU or are there parameter sets?
- Are the conditions for the programmed startup behavior satisfied?
- Are there any system software problems?

In STOP mode, the CPU can also receive global data and passive one-way communication is possible using communication SFBs for configured connections and communication SFCs for not configured connections.

Memory Reset

The CPU memory can be reset in STOP mode. The memory can be reset manually using the key switch (MRES) or from the programming device (for example, before downloading a user program).

Resetting the CPU memory returns the CPU to its initial status, as follows:

- The entire user program in the work memory and in the RAM load memory and all address areas are cleared.
- The system parameters and the CPU and module parameters are reset to the default settings. The MPI parameters set prior to the memory reset are retained.
- If a memory card (Flash EPROM) is plugged in, the CPU copies the user program from the memory card to the work memory (including the CPU and module parameters if the appropriate configuration data are also on the memory card).

The diagnostic buffer, the MPI parameters, the time, and the runtime meters are not reset.

26.1.3 STARTUP Mode

Before the CPU can start processing the user program, a startup program must first be executed. By programming startup OBs in your startup program, you can specify certain settings for your cyclic program.

There are three types of startup: warm restart, cold restart, and hot restart. A hot restart is only possible on S7-400 CPUs. This must be set explicitly in the parameter set for the CPU using STEP 7.

The features of the STARTUP mode are as follows:

- The program in the startup OB is processed (OB100 for warm restart, OB101 for hot restart, OB102 for cold restart).
- No time-driven or interrupt driven program execution is possible.
- Timers are updated.
- Runtime meters start running.
- Disabled digital outputs on signal modules (can be set by direct access).

Warm Restart

A warm restart is always permitted unless the system has requested a memory reset. A warm restart is the only possible option after:

- Memory reset
- Downloading the user program with the CPU in STOP mode
- I stack/B stack overflow
- Warm restart aborted (due to a power outage or changing the mode selector setting)
- When the interruption before a hot restart exceeds the selected time limit.

Manual Warm Restart

A manual warm restart can be triggered by the following:

- The mode selector

  (the CRST/WRST switch - if available - must be set to CRST)
- The corresponding command on the programming device or by communication functions

  (if the mode selector is set to RUN or RUN-P)

Automatic Warm Restart

An automatic warm restart can be triggered following power up in the following situations:

- The CPU was not in STOP mode when the power outage occurred.
- The mode selector is set to RUN or RUN-P.
- No automatic hot restart is programmed following power up.
- The CPU was interrupted by a power outage during a warm restart (regardless of the programmed type of restart).

The CRST/WRST switch has no effect on an automatic warm restart.

Automatic Warm Restart Without a Backup Battery

If you operate your CPU without a backup battery (if maintenance-free operation is necessary), the CPU memory is automatically reset and a warm restart executed after the power is turned on or when power returns following a power outage. The user program must be located on a flash EPROM (memory card) and there must be no battery monitoring set with the "Batt.Indic" switch on the power supply.

Hot Restart

Following a power outage in RUN mode followed by a return of power, S7-400 CPUs run through an initialization routine and then automatically execute a hot restart. During a hot restart, the user program is resumed at the point at which its execution was interrupted. The section of user program that had not been executed before the power outage is known as the remaining cycle. The remaining cycle can also contain time-driven and interrupt driven program sections.

A hot restart is only permitted when the user program was not modified in STOP mode (for example, by reloading a modified block) and when there are no other reasons for a warm restart. Both a manual and automatic hot restart are possible.

Manual Hot Restart

A manual hot restart is only possible with the appropriate parameter settings in the parameter set of the CPU and when the STOP resulted from the following causes:

- The mode selector was changed from RUN to STOP.
- User-programmed STOPs, STOPs after calling OBs that are not loaded.
- The STOP mode was the result of a command from the programming device or a communication function.

A manual hot restart can be triggered by the following:

- The mode selector

  The CRST/WRST must be set to WRST.
- The corresponding command on the programming device or by communication functions (mode selector set to RUN or RUN-P).
- When a manual hot restart is set in the parameter set of the CPU.

Automatic Hot Restart

An automatic hot restart can be triggered following power up in the following situations:

- The CPU was not in STOP or HOLD mode when the power outage occurred.
- The mode selector is set to RUN or RUN-P.
- Automatic hot restart following power up is set in the parameter set of the CPU.

The CRST/WRST switch has no effect on an automatic hot restart.

Retentive Data Areas Following Power Down

S7-300 and S7-400 CPUs react differently to power up following a power outage.

S7-300 CPUs (with the exception of the CPU 318) are only capable of a warm restart. With STEP 7, you can, however, specify memory bits, timers, counters, and areas in data blocks as retentive to avoid data loss caused by a power outage. When the power returns, an automatic warm restart with memory is executed.

S7-400 CPUs react to the return of power depending on the parameter settings either with a warm restart (following retentive or non-retentive power on) or a hot restart (only possible following retentive power on).

The following table shows the data that are retained on S7-300 and S7-400 CPUs during a warm restart, cold restart, or hot restart.

X	means	data retained
VC	means	logic block retained in EPROM, any overloaded logic blocks are lost
VX	means	data block is retained only if on the EPROM retentive data are taken from the NV-RAM (loaded or created data blocks in the RAM are lost)
0	means	data are reset or erased (content of DBs)
V	means	data are set to the initialization value taken from the EPROM memory
---	means	not possible as no NV-RAM available

The following table shows the data that are retained on work memory (EPROM and RAM load memory):

			EPROM	**(Memory**	**Card**	**or**	**Integrated)**		
	CPU	**with**	**Backup**	**Battery**		**CPU**	**without**	**Backup**	**Battery**
Data	Blocks in load memory	DB in work memo-ry	Memory bits, timers, counters	Memory bits, timers, counters	Blocks in load memory	DB in work memory	DB in work memory	Memory bits, timers, counters	Memory bits, timers, counters
			(defined as retentive)	(defined as volatile)		(defined as re-tentive)	(defined as volatile)	(defined as re-tentive)	(defined as volatile)
Warm restart on S7-300	X	X	X	0	VC	VX	V	X	0
Warm restart on S7-400	X	X	X	0	VC	---	V	0	0
Cold restart on S7-300	X	0	0	0	VC	V	V	0	0

			EPROM	(Memory	Card	or	Integrated)		
	CPU	**with**	**Backup**	**Battery**		**CPU**	**without**	**Backup**	**Battery**
Cold restart on S7-400	X	0	0	0	VC	---	V	0	0
Hot restart on S7-400	X	X	X	X		Only	warm restart	per-mitted	

Startup Activities

The following table shows which activities are performed by the CPU during startup:

Activities in Order of Execution	**In Warm Restart**	**In Cold Restart**	**In Hot Restart**
Clear I stack/B stack	X	X	0
Clear volatile memory bits, timers, counters	X	0	0
Clear all memory bits, timers, counters	0	X	0
Clear process-image output table	X	X	selectable
Reset outputs of digital signal modules	X	X	selectable
Discard hardware interrupts	X	X	0
Discard time-delay interrupts	x	x	0
Discard diagnostic interrupts	X	X	X
Update the system status list (SZL)	X	X	X
Evaluate module parameters and transfer to modules or transfer default values	X	X	X
Execution of the relevant startup OB	X	X	X
Execute remaining cycle (part of the user program not executed due to the power down)	0	0	X
Update the process-image input table	X	X	X
Enable digital outputs (cancel OD signal) after transition to RUN	X	X	X
X means is performed 0 means is not performed			

Aborting a Startup

If an error occurs during startup, the startup is aborted and the CPU changes to or remains in STOP mode.

An aborted warm restart must be repeated. After an aborted restart, both a warm restart and a hot restart are possible.

A startup (restart (warm restart) or hot restart) is not executed or it is aborted in the following situations:

- The operating mode switch of the CPU is set to STOP.
- A memory reset is requested.
- A memory card with an application code that is not permitted for STEP 7 is plugged in (for example, STEP 5).
- More than one CPU is inserted in the single processor mode.
- If the user program contains an OB that the CPU does not recognize or that has been disabled.
- If, after power on, the CPU recognizes that not all the modules listed in the configuration table created with STEP 7 are actually inserted (difference between preset and actual parameter assignment not permitted).
- If errors occur when evaluating the module parameters.

A hot restart is not executed or it is aborted in the following situations:

- The CPU memory was reset (only a warm restart is possible after memory reset).
- The interruption time limit has been exceeded (this is the time between exiting RUN mode until the startup OB including the remaining cycle has been executed).
- The module configuration has been changed (for example module replaced).
- The parameter assignment only permits a warm restart.
- When blocks have been loaded, deleted, or modified while the CPU was in STOP mode.

Sequence of Activities

The following figure shows the activities of the CPU during STARTUP and RUN:

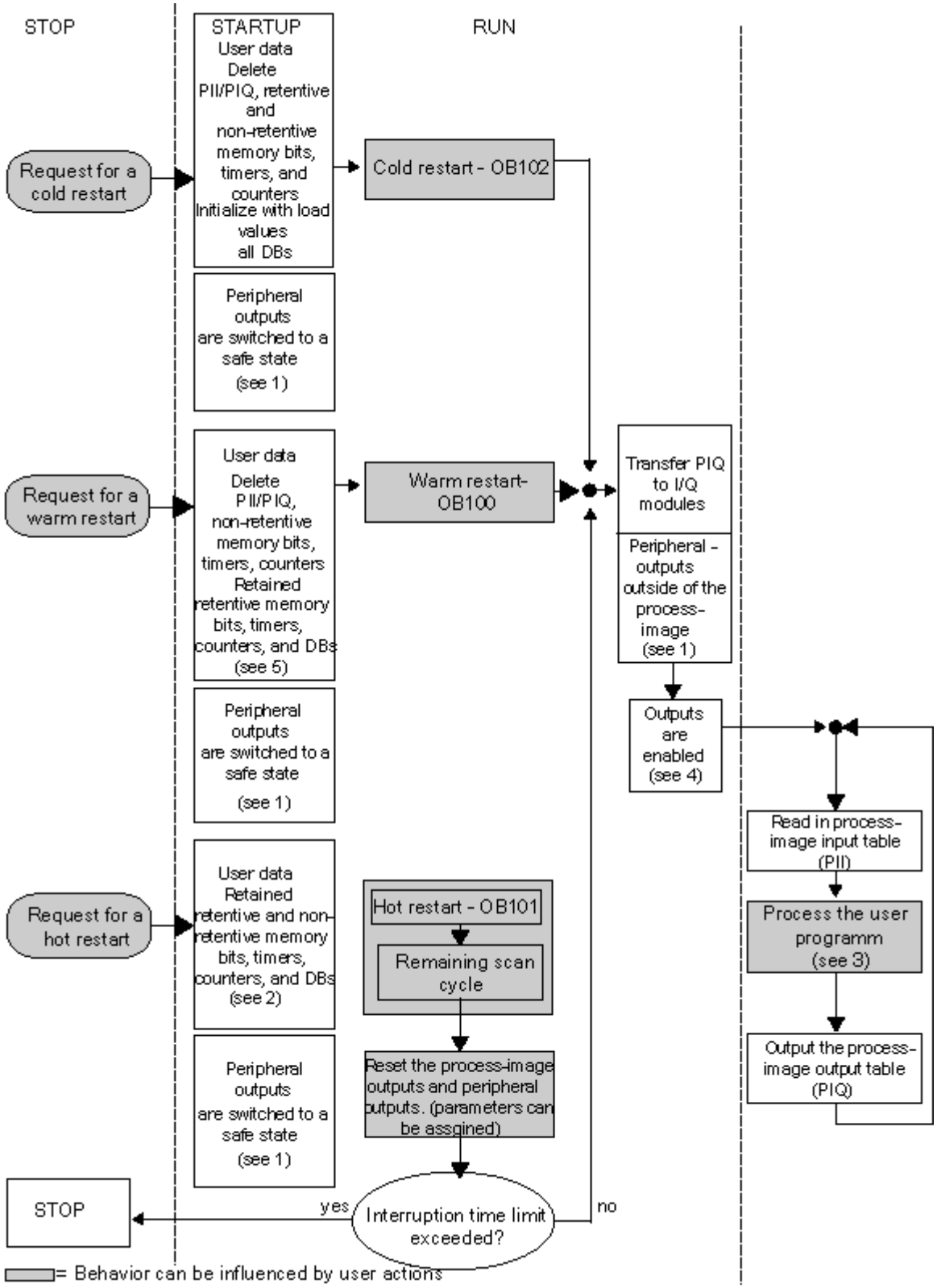

Key to the figure "Activities of the CPU during STARTUP and RUN"

1. All peripheral outputs are switched to a safe state (default value = 0) on the hardware side by the I/O modules. This switch takes place regardless of whether the user program employs the outputs inside the process-image area or outside of it.

   If you are using signal modules that have substitute value capability, you can assign parameters to the behavior of the outputs, such as Keep Last Value.

2. Necessary for processing the remaining scan cycle.
3. A current process-image input table is also available to the interrupt OBs the first time that they are called up.
4. You can determine the status of the local and distributed peripheral outputs in the first scan cycle of the user program by taking the following steps:
   - Use output modules to which you can assign parameters to enable the output of substitute values or to keep the last value.
   - For a hot restart: activate the CPU startup parameter "Reset outputs during hot restart" in order to output a 0 (corresponds to the default setting).
   - Preset the outputs in the startup OB (OB100, OB101, OB102).
5. In S7-300 systems that are not backed up, only those DB areas that were configured as retentive are retained.

26.1.4 RUN Mode

In RUN mode, the CPU executes the cyclic, time-driven, and interrupt-driven program, as follows:

- The process image of the inputs is read in.
- The user program is executed.
- The process-image output table is output.

The active exchange of data between CPUs using global data communication (global data table) and using communication SFBs for configured connections and using communication SFCs for non-configured connections is only possible in RUN mode.

The following table shows an example of when data exchange is possible in different operating modes:

Type of Communication	**Mode of CPU 1**	**Direction of Data Exchange**	**Mode of CPU 2**
Global data communication	RUN	↔	RUN
	RUN	→	STOP/HOLD
	STOP	←	RUN
	STOP	X	STOP
	HOLD	X	STOP/HOLD
One-way communication	RUN	→	RUN
with communication SFBs	RUN	→	STOP/HOLD
Two-way with communication SFBs	RUN	↔	RUN
One-way communication	RUN	→	RUN
with communication SFCs	RUN	→	STOP/HOLD
Two-way with communication SFCs	RUN	↔	RUN
↔ means	data exchange is possible in both directions		
→ means	data exchange is possible in only one direction		
X means	data exchange is not possible		

26.1.5 HOLD Mode

The HOLD mode is a special mode. This is only used for test purposes during startup or in RUN mode. The HOLD mode means the following:

- All timers are frozen: timers and runtime meters are not processed, monitoring times are stopped, the basic clock pulses of the time-driven levels are stopped.
- The real-time clock runs.
- Outputs are not enabled but can be enabled explicitly for test purposes.
- Inputs and outputs can be set and reset.
- If a power outage occurs on a CPU with a backup battery while in HOLD mode, the CPU changes to stop when the power returns but does not execute an automatic hot restart or restart (warm restart). CPUs without battery backup execute an automatic restart (warm restart) when power returns.
- Global data can be received and passive one-way communication using communication SFBs for configured connections and communication SFCs for non-configured connections is possible (see also table in RUN Mode).

26.2 Memory Areas of S7 CPUs

26.2.1 Distribution of the Memory Areas

The memory of an S7 CPU can be divided into three areas (see figure below):

- The load memory is used for user programs without symbolic address assignments or comments (these remain in the memory of the programming device). The load memory can be either RAM or EPROM.
- Blocks that are not marked as required for startup will be stored only in the load memory.
- The work memory (integrated RAM) contains the parts of the S7 program relevant for running your program. The program is executed only in the work memory and system memory areas.
- The system memory (RAM) contains the memory elements provided by every CPU for the user program, such as the process-image input and output tables, bit memory, timers, and counters. The system memory also contains the block stack and interrupt stack.
- In addition to the areas above, the system memory of the CPU also provides temporary memory (local data stack) that contains temporary data for a block when it is called. This data only remains valid as long as the block is active.

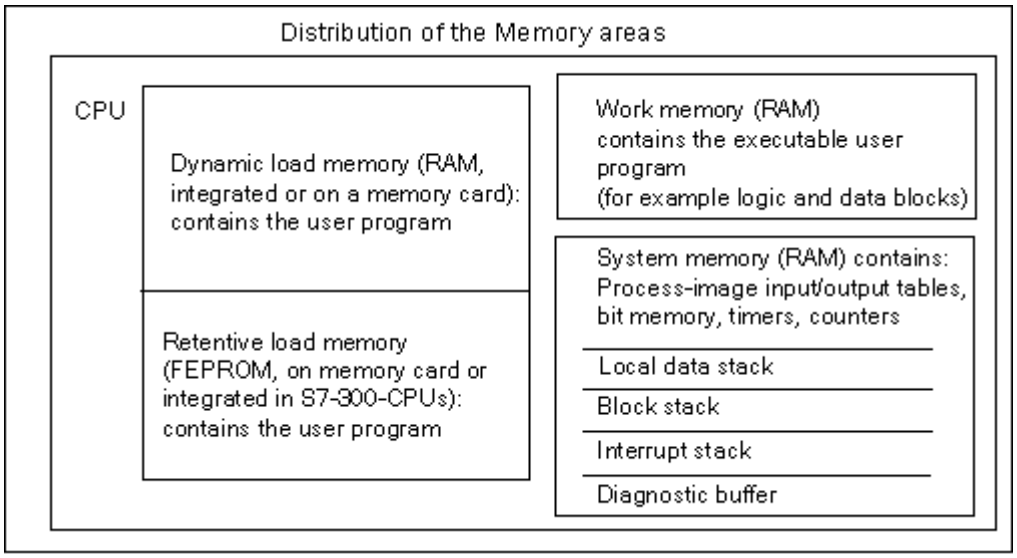

26.2.2 Load Memory and Work Memory

When you download the user program from the programming device to the CPU, only the logic and data blocks are loaded in the load and work memory of the CPU.

The symbolic address assignment (symbol table) and the block comments remain on the programming device.

Dividing Up the User Program

To ensure fast execution of the user program and to avoid unnecessary load on the work memory that cannot be expanded, only the parts of the blocks relevant for program execution are loaded in the work memory.

Parts of blocks that are not required for executing the program (for example, block headers) remain in the load memory.

The following figure shows a program being loaded in the CPU memory.

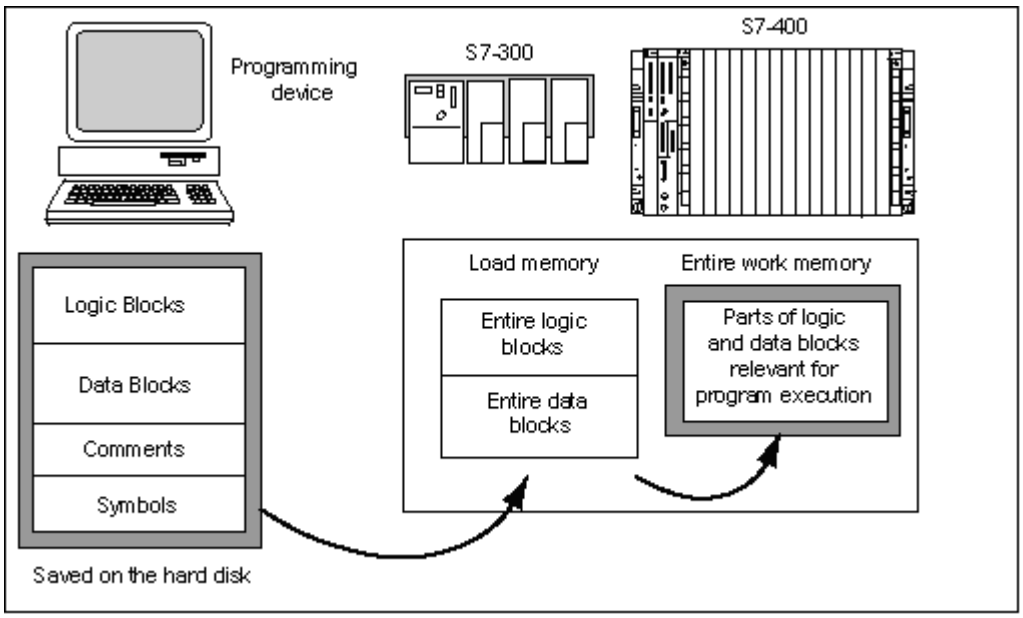

Note

Data blocks that are created in the user program with the help of system functions (for example, SFC22 CREAT_DB) are saved entirely in the work memory by the CPU.

Some CPUs have separately managed areas for code and data in the work memory. The size and assignment of these areas is shown in the "Memory" tab of the Module Information for these CPUs.

Identifying Data Blocks as "Not Relevant for Execution"

Data blocks that were programmed in a source file as part of an STL program can be identified as "Not Relevant for Execution" (keyword UNLINKED). This means that when they are downloaded to the CPU, the DBs are stored only in the load memory. The content of such blocks can, if necessary, be copied to the work memory using SFC20 BLKMOV.

This technique saves space in the work memory. The expandable load memory is then used as a buffer (for example, for formulas for a mixture: only the formula for the next batch is loaded in the work memory).

Load Memory Structure

The load memory can be expanded using memory cards. Refer to your "S7-300 Programmable Controller, Hardware and Installation Manual" and your "S7-400 Programmable Controller Module Specifications Reference Manual" for the maximum size of the load memory.

The load memory can also have an integrated EPROM part as well as an integrated RAM part in S7-300 CPUs. Areas in data blocks can be declared as retentive by assigning parameters in STEP 7 (see Retentive Memory Areas on S7-300 CPUs).

In S7-400 CPUs, it is imperative that you use a memory card (RAM or EPROM) to expand the load memory. The integrated load memory is a RAM memory and is mainly used to reload and correct blocks. With several S7-400 CPUs, additional work memory can also be plugged in.

Load Memory Behavior in RAM and EPROM Areas

Depending on whether you select a RAM or an EPROM memory card to expand the load memory, the load memory may react differently during downloading, reloading, or memory reset.

The following table shows the various loading methods:

Memory Type	Method of Loading	Type of Loading
RAM	Downloading and deleting individual blocks	PG-CPU connection
	Downloading and deleting an entire S7 program	PG-CPU connection
	Reloading individual blocks	PG-CPU connection
Integrated (S7-300 only) or plug-in EPROM	Downloading entire S7 programs	PG-CPU connection
Plug-in EPROM	Downloading entire S7 programs	Uploading the EPROM to the PG and inserting the memory card in the CPU Downloading the EPROM to the CPU

Programs stored in RAM are lost when you reset the CPU memory (MRES) or if you remove the CPU or RAM memory card.

Programs saved on EPROM memory cards are not erased by a CPU memory reset and are retained even without battery backup (transport, backup copies).

26.2.3 System Memory

26.2.3.1 Using the System Memory Areas

The system memory of the S7 CPUs is divided into address areas (see table below). Using instructions in your program, you address the data directly in the corresponding address area.

Address Area	Access via Units of Following Size	S7 Notation (IEC)	Description
Process image input table	Input (bit)	I	At the beginning of the scan cycle, the CPU reads the inputs from the input modules and records the values in this area.
	Input byte	IB	
	Input word	IW	
	Input double word	ID	
Process image output table	Output (bit)	Q	During the scan cycle, the program calculates output values and places them in this area. At the end of the scan cycle, the CPU sends the calculated output values to the output modules.
	Output byte	QB	
	Output word	QW	
	Output double word	QD	
Bit memory	Memory (bit)	M	This area provides storage for interim results calculated in the program.
	Memory byte	MB	
	Memory word	MW	
	Memory double word	MD	
Timers	Timer (T)	T	This area provides storage for timers.
Counters	Counter (C)	C	This area provides storage for counters.
Data block	Data block, opened with "OPN DB":	DB	Data blocks contain information for the program. They can be defined for general use by all logic blocks (shared DBs) or they are assigned to a specific FB or SFB (instance DB).
	Data bit	DBX	
	Data byte	DBB	
	Data word	DBW	
	Data double word	DBD	
	Data block, opened with "OPN DI":	DI	
	Data bit	DIX	
	Data byte	DIB	
	Data word	DIW	
	Data double word	DID	

Address Area	Access via Units of Following Size	S7 Notation (IEC)	Description
Local data	Local data bit	L	This area contains the temporary data of a block while the block is being executed. The L stack also provides memory for transferring block parameters and for recording interim results from Ladder Logic networks.
	Local data byte	LB	
	Local data word	LW	
	Local data double word	LD	
Peripheral (I/O) area: inputs	Peripheral input byte	PIB	The peripheral input and output areas allow direct access to central and distributed input and output modules (DP).
	Peripheral input word	PIW	
	Peripheral input double word	PID	
Peripheral (I/O) area: outputs	Peripheral output byte	PQB	
	Peripheral output word	PQW	
	Peripheral output double word	PQD	

Refer to the following CPU manuals or instruction lists for information on which address areas are possible for your CPU:

- "S7-300 Programmable Controller, Hardware and Installation" Manual
- "S7-400 Programmable Controller, Module Specifications" Reference Manual
- "S7-300 Programmable Controller, Instruction List"
- "S7-400 Programmable Controller, Reference Guide"

26.2.3.2 Process-Image Input/Output Tables

If the input (I) and output (Q) address areas are accessed in the user program, the program does not scan the signal states on the digital signal modules but accesses a memory area in the system memory of the CPU and distributed I/Os. This memory area is known as the process image.

Updating the Process Image

The following figure shows the processing steps within a scan cycle.

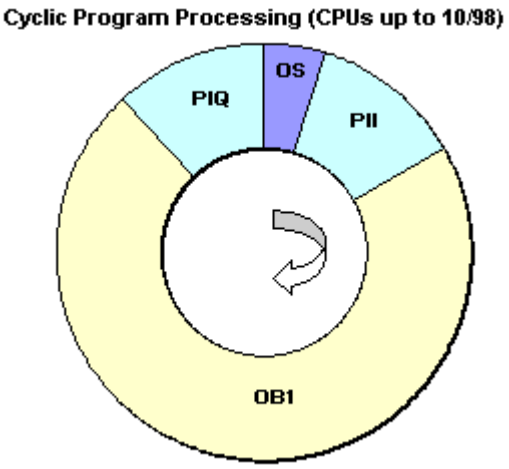

One of the internal tasks of the operating system (OS) is to read the status of inputs into the process image input table (PII). Once this step is complete, the user program is executed with all blocks that are called in it. The cycle ends with writing the process image output table (PIQ) to the outputs for the modules. Reading in the process image input table and writing the process image output table to the outputs for the modules is all independently controlled by the operating system.

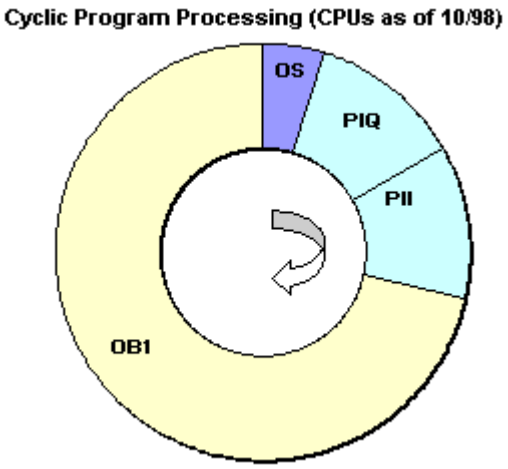

One of the internal tasks of the operating system (OS) is to write the process image output table (PIQ) to the outputs for the modules and to read in the status of inputs into the process image input table (PII). Once this step is complete, the user program is executed with all blocks that are called in it. Writing the process image output table to the outputs for the modules and reading in the process image input table is all independently controlled by the operating system.

Advantages of the Process Image

Compared with direct access to the input/output modules, the main advantage of accessing the process image is that the CPU has a consistent image of the process signals for the duration of one program cycle. If a signal state on an input module changes while the program is being executed, the signal state in the process image is retained until the process image is updated again in the next cycle. The process of repeatedly scanning an input signal within a user program ensures that consistent input information is always available.

Access to the process image also requires far less time than direct access to the signal modules since the process image is located in the internal memory of the CPU.

Part Process Images (Process-Image Partitions)

In addition to having the process image (process-image input table, PII, and process-image output table, PIQ) automatically updated by the operating system, you can assign parameters to a maximum of 15 partial process images for an S7-400 CPU (CPU-specific, no. 1 to no. 15, see the S7-400 Programmable Controller, Module Specifications Reference Manual). This means that you can update sections of the process-image table, when necessary, independently of the cyclic updating of the process image table.

Each input/output address that you assign with STEP 7 to a process-image partition no longer belongs to the OB1 process-image input/output tables. Input and output address can only be assigned once through the OB 1 process image and all process-image partitions.

You define process-image partition with STEP 7 when you assign addresses (which input/output addresses of the modules are listed in which process-image partition). The process-image partition is updated either by the user with SFCs or automatically by the system by connecting to an OB.

Exception: Process image partitions for synchronous cycle interrupt OBs are not updated on the system side, even though they are linked to an OB (OB 61 to OB 64).

Note

For S7-300 CPUs, unassigned process-image inputs and outputs can be used as additional bit memory areas. Programs that use this capability can run on older (that is, before 4/99) S7-400 CPUs only under one of the following conditions:

For these S7-400 CPUs

- The process image areas used as bit memory must be located outside of the parameter assignment for "Size of the Process Image" or.
- must be located in a process-image partition that is updated neither by the system nor by SFC26/SFC27.

Updating Part Process Images (Process-Image Partitions) with SFCs

You can use SFCs to update the entire process image or a process-image partition from your user program.

- Requirement: The process image in question is not updated by the system.
- SFC26 UPDAT_PI: Update process-image input table
- SFC27 UPDAT_PO: Update process-image output table.

System Update of the Part Process Images (Process-Image Partitions)

You can also have the system update process-image partitions automatically by calling an OB - similar to the (entire) process image, which is updated cyclically before or after OB1 is processed. You can assign this function as a parameter only for specific CPUs.

During operation, the assigned process-image partition is updated automatically:

- Before the OB is processed, the process-image partition for inputs
- After the OB is processed, the process-image partition for the outputs

You assign the parameters for the CPU, along with the priority of the OBs, to indicate which process-image partition is assigned to which OB.

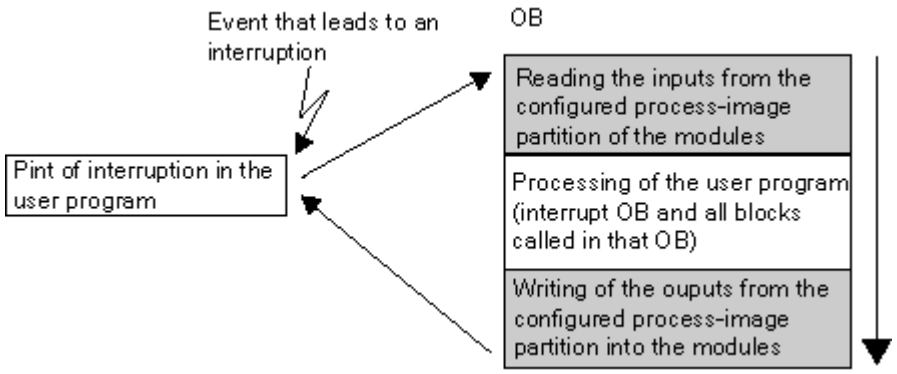

I/O Access Error (PZF) during Update of the Process Image

The default reaction of the CPU families (S7-300 and S7-400) to an error during the update of the process image varies:

- S7-300: No entry is made in the diagnostic buffer, no OB is called, the corresponding input bytes are reset to "0" and will remain at "0" until the fault is gone again.
- S7-400: An entry is made in the diagnostic buffer and OB85 is started for each I/O access for each update of the corresponding process image. The faulty input bytes are reset to "0" each time the process image is accessed.

For new CPUs (as of 4/99), you can reassign parameters for the reaction to I/O access errors so that the CPU functions in one of the following manners:

- Generates an entry in the diagnostic buffer and starts OB85 only for incoming and outgoing PZF (before OB 85 is called, the faulty input bytes are reset to "0" and are no longer overwritten by the operating system until the outgoing PZF)
- Produces the default reaction of an S7-300 (does not call OB85; the corresponding input bytes are reset to "0" and are no longer overwritten by the operating system until the fault is cleared.)
- Produces the default reaction of an S7-400 (calls OB85 for each individual access; the faulty input bytes are reset to "0" each time the process image is accessed.)

How Often Does OB85 Start?

In addition to the reaction to PZF that is assigned as a parameter (incoming/outgoing, or for each I/O access), the address space of a module also influences how often OB85 starts:

For a module with an address space of up to a double word, OB85 starts once, for example, for a digital module with a maximum of 32 inputs or outputs, or for an analog module with two channels.

For modules with a larger address space, OB85 starts as often as access has to be made to it with double word commands, for example, twice for an analog module with four channels.

26.2.3.3 Local Data Stack

The L stack saves the following:

- The temporary variables of the local data of blocks
- The start information of the organization blocks
- Information about transferring parameters
- Interim results of the logic in Ladder Logic programs

When you are programming organization blocks, you can declare temporary variables (TEMP) that are only available when the block is executed and are then overwritten again. Before you access the local data stack for the first time, the local data must be initialized. In addition to this, every organization block also requires 20 bytes of local data for its start information.

The CPU has a limited amount of memory for the temporary variables (local data) of blocks currently being executed. The size of this memory area, the local data stack, is dependent on the CPU. The local data stack is divided up equally among the priority classes (default). This means that every priority class has its own local data area, thus guaranteeing that higher priority classes and their OBs also have space available for their local data.

The following figure shows the assignment of local data to the priority classes in an example in which in the L stack OB1 is interrupted by OB10 which is then interrupted by OB81.

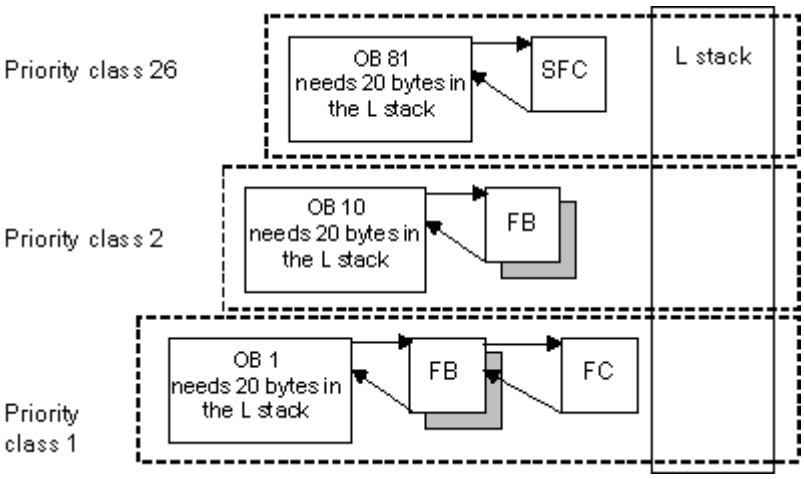

Caution

When using temporary variables, remember that they are only valid within the relevant block or are only available as previous local data for other blocks called in this block. In particular, there is no guarantee that if you close and then re-open the block, the temporary variables will have the same values they had when the previous block call was completed. Temporary variables are by definition undetermined when a block is called and must be re-initialized again when they are used for the first time in the block.

All the temporary variables (TEMP) of an OB and its associated blocks are saved in the L stack. If you use too many nesting levels when executing your blocks, the L stack can overflow.

S7 CPUs change to STOP mode if the permitted L stack size for a program is exceeded.

Test the L stack (the temporary variables) in your program.

The local data requirements of synchronous error OBs must be taken into consideration.

Assigning Local Data to Priority Classes

Not every priority class requires the same amount of memory in the local data stack. By assigning parameters in STEP 7, you can set different sized local data areas for the individual priority classes for S7-400 CPUs and for the CPU 318. Any priority classes you do not required can be deselected. With S7-400 CPUs and the CPU 318 the memory area for other priority classes is then increased. Deactivated OBs are ignored during program execution and save cycle time.

With the other S7-300 CPUs every priority class is assigned a fixed amount of local data (256 bytes) that cannot be changed.

26.2.3.4 Interrupt Stack

If program execution is interrupted by a higher priority OB, the operating system saves the current contents of the accumulators and address registers, and the number and size of the open data blocks in the interrupt stack.

Once the new OB has been executed, the operating system loads the information from the I stack and resumes execution of the interrupted block at the point at which the interrupt occurred.

When the CPU is in STOP mode, you can display the I stack on a programming device using STEP 7. This allows you to find out why the CPU changed to STOP mode.

26.2.3.5 Block Stack

If processing of a block is interrupted by the call of another block or by a higher priority class (interrupt/error servicing), the B stack stores the following data:

- Number, type (OB, FB, FC, SFB, SFC), and return address of the block that was interrupted.
- Numbers of the data blocks (from the DB and DI register) that were open when the block was interrupted.

Using this data, the user program can then be resumed after the interrupt.

If the CPU is in STOP mode, you can display the B stack with STEP 7 on a programming device. The B stack lists all the blocks that had not been completely executed when the CPU changed to STOP mode. The blocks are listed in the order in which processing was started (see figure below).

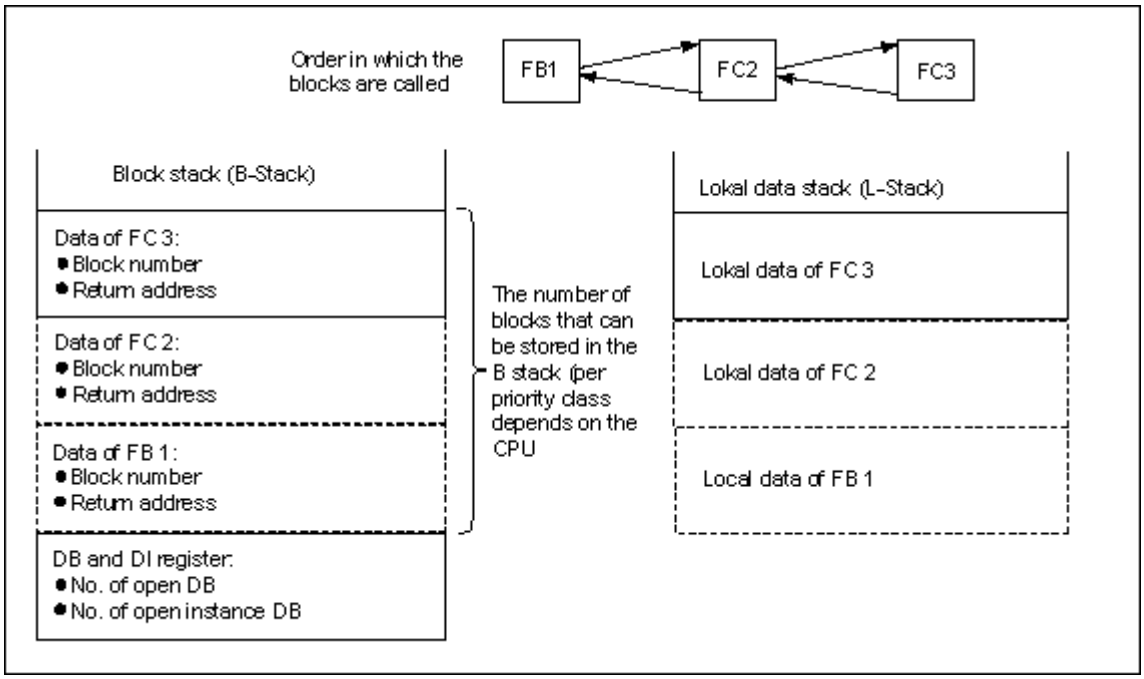

Data Block Registers

There are two data block registers. These contain the numbers of opened data blocks, as follows:

- The DB register contains the number of the open shared data block
- The DI register contains the number of the open instance data block.

26.2.3.6 Diagnostic Buffer

The diagnostic buffer displays the diagnostic messages in the order in which they occur. The first entry contains the newest event. The number of entries in the diagnostic buffer is dependent on the module and its current operating mode.

Diagnostic events include the following:

- Faults on a module
- Errors in the process wiring
- System errors in the CPU
- Mode transitions on the CPU
- Errors in the user program
- User-defined diagnostic events (via the system function SFC52).

26.2.3.7 Evaluating the Diagnostic Buffer

One part of the system status list is the diagnostic buffer that contains more information about system diagnostic events and User-defined diagnostic events in the order in which they occurred. The information entered in the diagnostic buffer when a system diagnostic event occurs is identical to the start information transferred to the corresponding organization block.

You cannot clear the entries in the diagnostic buffer and its contents are retained even after a memory reset.

The diagnostic buffer provides you with the following possibilities:

- If the CPU changes to STOP mode, you can evaluate the last events leading up to the STOP and locate the cause.
- The causes of errors can be detected far more quickly increasing the availability of the system.
- You can evaluate and optimize the dynamic system response.

Organizing the Diagnostic Buffer

The diagnostic buffer is designed to act as a ring buffer for a maximum number of entries which is dependent on the individual module. This means that when the maximum number of entries is reached, the next diagnostic buffer event causes the oldest entry to be deleted. All entries then move back one place. This means that the newest entry is always the first entry in the diagnostic buffer. For the S7-300 CPU 314 the number of possible entries is 100:

The number of entries displayed in the diagnostic buffer is dependent on the module and its current operating mode. With some CPUs, it is possible to set the length of the diagnostic buffer.

Diagnostic Buffer Content

The **upper** list box contains a list of all the diagnostic events that occurred with the following information:

- Serial number of the entry (the newest entry has the number 1)
- Time and date of the diagnostic event: The time and date of the module are displayed if the module has an integrated clock. For the time data in the buffer to be valid, it is important that you set the time and date on the module and check it regularly.
- Short description of the diagnostic event

In the **lower** text box, all the additional information is displayed for the event selected in the list in the upper window. This information includes:

- Event number
- Description of the event
- Mode transition caused by the diagnostic event
- Reference to the location of the error in a block (block type, block number, relative address) which caused the entry in the buffer
- Event state being entered or left
- Additional information specific to the event

With the "Help on Event" button you can display additional information on the event selected in the upper list box.

Information on event IDs can be found in the Reference Help on System Blocks and System Functions (Jumps to Language Descriptions and Help on Blocks, System Attributes)

Saving the Contents in a Text File

Using the "Save As" button in the "Diagnostic Buffer" tab of the "Module Information" dialog box you can save the contents of the diagnostic buffer as ASCII text.

Displaying the Diagnostic Buffer

You can display the contents of the diagnostic buffer on the programming device via the "Diagnostic Buffer" tab in the "Module Information" dialog box or in a program using the system function SFC51 RDSYSST.

Last Entry before STOP

You can specify that the last diagnostic buffer entry before the transition from RUN to STOP is automatically sent to a logged on monitoring device (for example, PG, OP, TD) in order to locate and remedy the cause of the change to STOP more quickly.

26.2.3.8 Retentive Memory Areas on S7-300 CPUs

If a power outage occurs or the CPU memory is reset (MRES), the memory of the S7-300 CPU (dynamic load memory (RAM), work memory, and system memory) is reset and all the data previously contained in these areas is lost. With S7-300 CPUs, you can protect your program and its data in the following ways:

- You can protect all the data in the load memory, work memory, and in parts of the system memory with battery backup.
- You can store your program in the EPROM (either memory card or integrated on the CPU, refer to the "S7-300 Programmable Controller, Hardware and Installation" Manual).
- You can store a certain amount of data depending on the CPU in an area of the nonvolatile NVRAM.

Using the NVRAM

Your S7-300 CPU provides an area in the NVRAM (non-volatile RAM) (see figure below). If you have stored your program in the EPROM of the load memory, you can save certain data (if there is a power outage or when the CPU changes from STOP to RUN) by configuring your CPU accordingly.

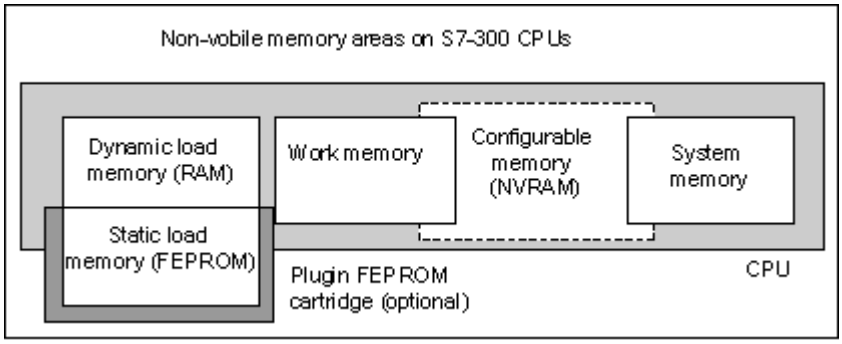

To do this set the CPU so that the following data are saved in the nonvolatile RAM:

- Data contained in a DB (this is only useful if you have also stored your program in an EPROM of the load memory)
- Values of timers and counters
- Data saved in bit memory.

On every CPU, you can save a certain number of timers, counters, and memory bits. A specific number of bytes is also available in which the data contained in DBs can be saved.

The MPI address of your CPU is stored in the NVRAM. This makes sure that your CPU is capable of communication following a power outage or memory reset.

Using Battery Backup to Protect Data

By using a backup battery, the load memory and work memory are retentive during a power outage. If you configure your CPU so that timers, counters, and bit memory are saved in the NVRAM, this information is also retained regardless of whether you use a backup battery or not.

Configuring the Data of the NVRAM

When you configure your CPU with STEP 7, you can decide which memory areas will be retentive.

The amount of memory that can be configured in the NVRAM depends on the CPU you are using. You cannot back up more data than specified for your CPU.

26.2.3.9 Retentive Memory Areas on S7-400 CPUs

Operation Without Battery Backup

If you operate your system without battery backup, when a power outage occurs or when you reset the CPU memory (MRES), the memory of the S7-400 CPU (dynamic load memory (RAM), work memory, and system memory) is reset and all the data contained in these areas is lost.

Without battery backup, only a restart (warm restart) is possible and there are no retentive memory areas. Following a power outage, only the MPI parameters (for example, the MPI address of the CPU) are retained. This means that the CPU remains capable of communication following a power outage or memory reset.

Operation With Battery Backup

If you use a battery to back up your memory:

- The entire content of all RAM areas is retained when the CPU restarts following a power outage.
- During a restart (warm restart), the address areas for bit memory, timers, and counters is cleared. The contents of data blocks are retained.
- The contents of the RAM work memory are also retained apart from bit memory, timers, and counters that were designed as non-retentive.

Configuring Retentive Data Areas

You can declare a certain number of memory bits, timers, and counters as retentive (the number depends on your CPU). During a restart (warm restart) when you are using a backup battery, this data is also retained.

When you assign parameters with STEP 7, you define which memory bits, timers, and counters should be retained during a restart (warm restart). You can only back up as much data as is permitted by your CPU.

For more detailed information about defining retentive memory areas, refer to your "S7-400 Programmable Controller, Module Specifications" Reference Manual.

26.2.3.10 Configurable Memory Objects in the Work Memory

With some CPUs, the size of objects such as local or the diagnostic buffer can be set in HW Config. If, for example, you reduce the default values, a larger section of the work memory is made available elsewhere. The settings for these CPUs can be displayed in the "Memory" tab of the Module Information ("Details" button).

After the memory configuration has been changed and downloaded to the programmable controller, you must perform a cold restart in order for the changes to become effective.

26.3 Data Types and Parameter Types

26.3.1 Introduction to Data Types and Parameter Types

All the data in a user program must be identified by a data type. The following data types are available:

- Elementary data types provided by STEP 7
- Complex data types that you yourself can create by combining elementary data types
- Parameter types with which you define parameters to be transferred to FBs or FCs

General Information

Statement List, Ladder Logic, and Function Block Diagram instructions work with data objects of specific sizes. Bit logic instructions work with bits, for example. Load and transfer instructions (STL) and move instructions (LAD and FBD) work with bytes, words, and double words.

A bit is a binary digit "0" or "1." A byte is made up of eight bits, a word of 16 bits, and a double word of 32 bits.

Math instructions also work with bytes, words, or double words. In these byte, word, or double word addresses you can code numbers of various formats such as integers and floating-point numbers.

When you use symbolic addressing, you define symbols and specify a data type for these symbols (see table below). Different data types have different format options and number notations.

This chapter describes only some of the ways of writing numbers and constants. The following table lists the formats of numbers and constants that will not be explained in detail.

Format	Size in Bits	Number Notation
Hexadecimal	8, 16, and 32	B#16#, W#16#, and DW#16#
Binary	8, 16, and 32	2#
IEC date	16	D#
IEC time	32	T#
Time of day	32	TOD#
Character	8	'A'

26.3.2 Elementary Data Types

Each elementary data type has a defined length. The following table lists the elementary data types.

Type and Description	Size in Bits	Format Options	Range and Number Notation (lowest to highest value)_	Example
BOOL(Bit)	1	Boolean text	TRUE/FALSE	TRUE
BYTE (Byte)	8	Hexadecimal number	B#16#0 to B#16#FF	L B#16#10 L byte#16#10
WORD (Word)	16	Binary number Hexadecimal number BCD Decimal number unsigned	2#0 to 2#1111_1111_1111_1111 W#16#0 to W#16#FFFF C#0 to C#999 B#(0.0) to B#(255.255)	L 2#0001_0000_0000_0000 L W#16#1000 L word#16#1000 L C#998 L B#(10,20) L byte#(10,20)
DWORD (Double word)	32	Binary number Hexadecimal number Decimal number unsigned	2#0 to 2#1111_1111_1111_1111 1111_1111_1111_1111 DW#16#0000_0000 to DW#16#FFFF_FFFF B#(0,0,0,0) to B#(255,255,255,255)	2#1000_0001_0001_1000_ 1011_1011_0111_1111 L DW#16#00A2_1234 L dword#16#00A2_1234 L B#(1, 14, 100, 120) L byte#(1,14,100,120)
INT (Integer)	16	Decimal number signed	-32768 to 32767	L 1
DINT (Integer, 32 bits)	32	Decimal number signed	L#-2147483648 to L#2147483647	L L#1
REAL (Floating-point number)	32	IEEE Floating-point number	Upper limit: ±3.402823e+38 Lower limit: ±1.175 495e-38	L 1.234567e+13
S5TIME (SIMATIC time)	16	S7 time in steps of 10 ms (default)	S5T#0H_0M_0S_10MS to S5T#2H_46M_30S_0MS and S5T#0H_0M_0S_0MS	L S5T#0H_1M_0S_0MS L S5TIME#0H_1H_1M_0S_0MS
TIME (IEC time)	32	IEC time in steps of 1 ms, integer signed	T#-24D_20H_31M_23S_648MS to T#24D_20H_31M_23S_647MS	L T#0D_1H_1M_0S_0MS L TIME#0D_1H_1M_0S_0MS
DATE (IEC date)	16	IEC date in steps of 1 day	D#1990-1-1 to D#2168-12-31	L D#1996-3-15 L DATE#1996-3-15
TIME_OF_DAY (Time)	32	Time in steps of 1 ms	TOD#0:0:0.0 to TOD#23:59:59.999	L TOD#1:10:3.3 L TIME_OF_DAY#1:10:3.3
CHAR (Character)	8	ASCII characters	'A','B' etc.	L 'E'

26.3.2.1 Format of the Data Type INT (16-Bit Integers)

An integer has a sign that indicates whether it is a positive or negative integer. The space that an integer (16 bits) occupies in the memory is one word. The following table shows the range of an integer (16 bits).

Format	Range
Integer (16 bits)	-32 768 to +32 767

The following figure shows the integer +44 as a binary number.

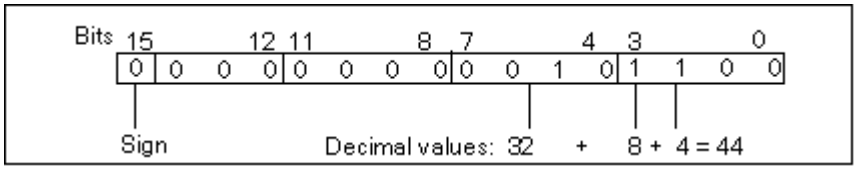

26.3.2.2 Format of the Data Type DINT (32-Bit Integers)

An integer has a sign that indicates whether it is a positive or negative integer. The space that a double integer occupies in the memory is two words. The following table shows the range of a double integer.

Format	Range
Integer (32 bits)	-2 147 483 648 to +2 147 483 647

The following figure shows the integer -500 000 as a binary number. In the binary system, the negative form of an integer is represented as the twos complement of the positive integer. You obtain the twos complement of an integer by reversing the signal states of all bits and then adding +1 to the result.

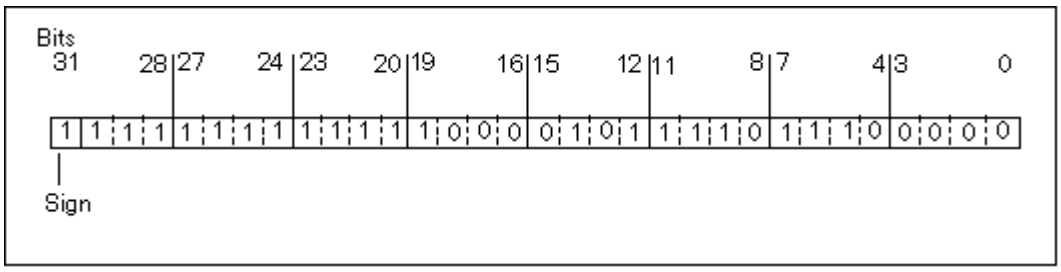

26.3.2.3 Format of the Data Type REAL (Floating-Point Numbers)

Numbers in floating-point format are represented in the general form "number = m * b to the power of E." The base "b" and the exponent "E" are integers; the mantissa "m" is a rational number.

This type of number representation has the advantage of being able to represent both very large and very small values within a limited space. With the limited number of bits for the mantissa and exponent, a wide range of numbers can be covered.

The disadvantage is in the limited accuracy of calculations. For example, when forming the sum of two numbers, the exponents must be matched by shifting the mantissa (hence floating decimal point) since only numbers with the same exponent can be added.

Floating-point number format in STEP 7

Floating-point numbers in STEP 7 conform to the basic format, single width, described in the ANSI/IEEE standard 754-1985, *IEEE Standard for Binary Floating-Point Arithmetic*. They consist of the following components:

- The sign S
- The exponent e = E + bias, increased by a constant (bias = +127)
- The fractional part of the mantissa m.
  The whole number part of the mantissa is not stored with the rest, because it is always equal to 1 within the valid number range.

The three components together occupy one double word (32 bits):

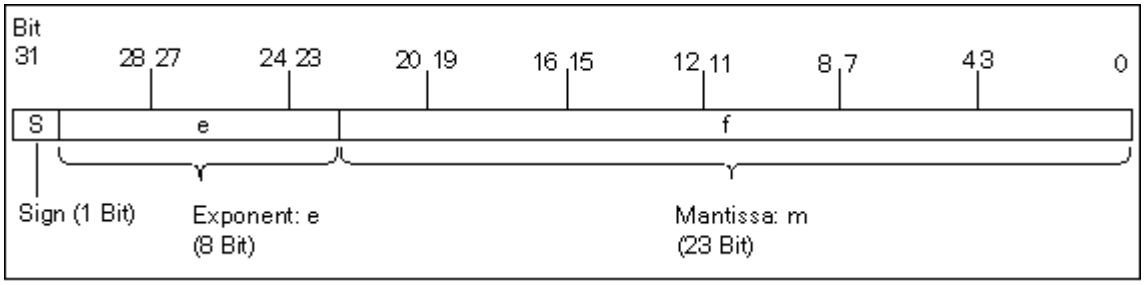

The following table shows the values of the individual bits in floating-point format.

Component of the Floating-Point Number	Bit Number	Value
Sign S	31	
Exponent **e**	30	2 to the power of 7
...	...	...
Exponent **e**	24	2 to the power of 1
Exponent **e**	23	2 to the power of 0
Mantissa **m**	22	2 to the power of -1
...	...	...
Mantissa **m**	1	2 to the power of -22
Mantissa **m**	0	2 to the power of -23

Using the three components **S**, **e**, and **m**, the value of a number represented in this form is defined by the formula:

Number = 1.**m** ∗ 2 to the power of (e - bias)

Where:

- e: 1 ≤ e ≤ 254
- Bias: bias = 127. This means that an additional sign is not required for the exponent.
- S: for a positive number, S = 0 and for a negative number, S = 1.

Value Range of Floating-Point Numbers

Using the floating-point format shown above, the following results:

- The smallest floating-point number = 1.0 ∗ 2 to the power of (1-127) = 1.0 ∗ 2 to the power of (-126)
  = 1.175 495E-38 and
- The largest floating-point number = 2-2 to the power of (-23) ∗ 2 to the power of (254-127) = 2-2 to the power of (-23) ∗ 2 to the power of (+127)
  = 3.402 823E+38

The number zero is represented with e = m = 0; e = 255 and m = 0 stands for "infinite."

Format	Range[1)]
Floating-point numbers according to the ANSI/IEEE standard	-3.402 823E+38 to -1.175 495E-38 and 0 and +1.175 495E-38 to +3.402 823E+38

The following table shows the signal state of the bits in the status word for the results of instructions with floating-point numbers that do not lie within the valid range:

Invalid Range for a Result	CC1	CC0	OV	OS
-1.175494E-38 < result < -1.401298E-45 (negative number) underflow	0	0	1	1
+1.401298E-45 < result < +1.175494E-38 (positive number) underflow	0	0	1	1
Result < -3.402823E+38 (negative number) overflow	0	1	1	1
Result > 3.402823E+38 (positive number) overflow	1	0	1	1
Not a valid floating-point number or invalid instruction (input value outside the valid value range)	1	1	1	1

Note when using mathematical operations:

The result "Not a valid floating-point number" is obtained, for example, when you attempt to extract the square root from -2. You should therefore always evaluate the status bits first in math operations before continuing calculations based on the result.

Note when modifying variables:

If the values for floating-point operations are stored in memory double words, for example, you can modify these values with any bit patterns. However, not every bit pattern is a valid number.

Accuracy when Calculating Floating-Point Numbers

Caution

Calculations involving a long series of values including very large and very small numbers can produce inaccurate results.

The floating-point numbers in STEP 7 are accurate to 6 decimal places. You can therefore only specify a maximum of 6 decimal places when entering floating-point constants.

Note

The calculation accuracy of 6 decimal places means, for example, that the addition of number1 + number2 = number1 if number1 is greater than number2 ∗ 10 to the power of y, where y>6:

100 000 000 + 1 = 100 000 000.

Examples of Numbers in Floating-Point Format

The following figure shows the floating-point format for the following decimal values:

- 10.0
- Pi (3.141593)
- Square root of 2 (1.414214)

The number 10.0 in the first example results from its floating-point format (hexadecimal representation: 4120 0000) as follows:

e = 2 to the power of 7 + 2 to the power of 1 = 2 + 128 = 130

m = 2 to the power of (-2) = 0.25

This results in:

(1 + m) ∗ 2 to the power of (e - bias) = 1.25 ∗ 2 to the power of 3 = 10.0

[1.25 ∗ 2 to the power of (130-127) = 1.25 ∗ 2 to the power of 3 = 10.0]

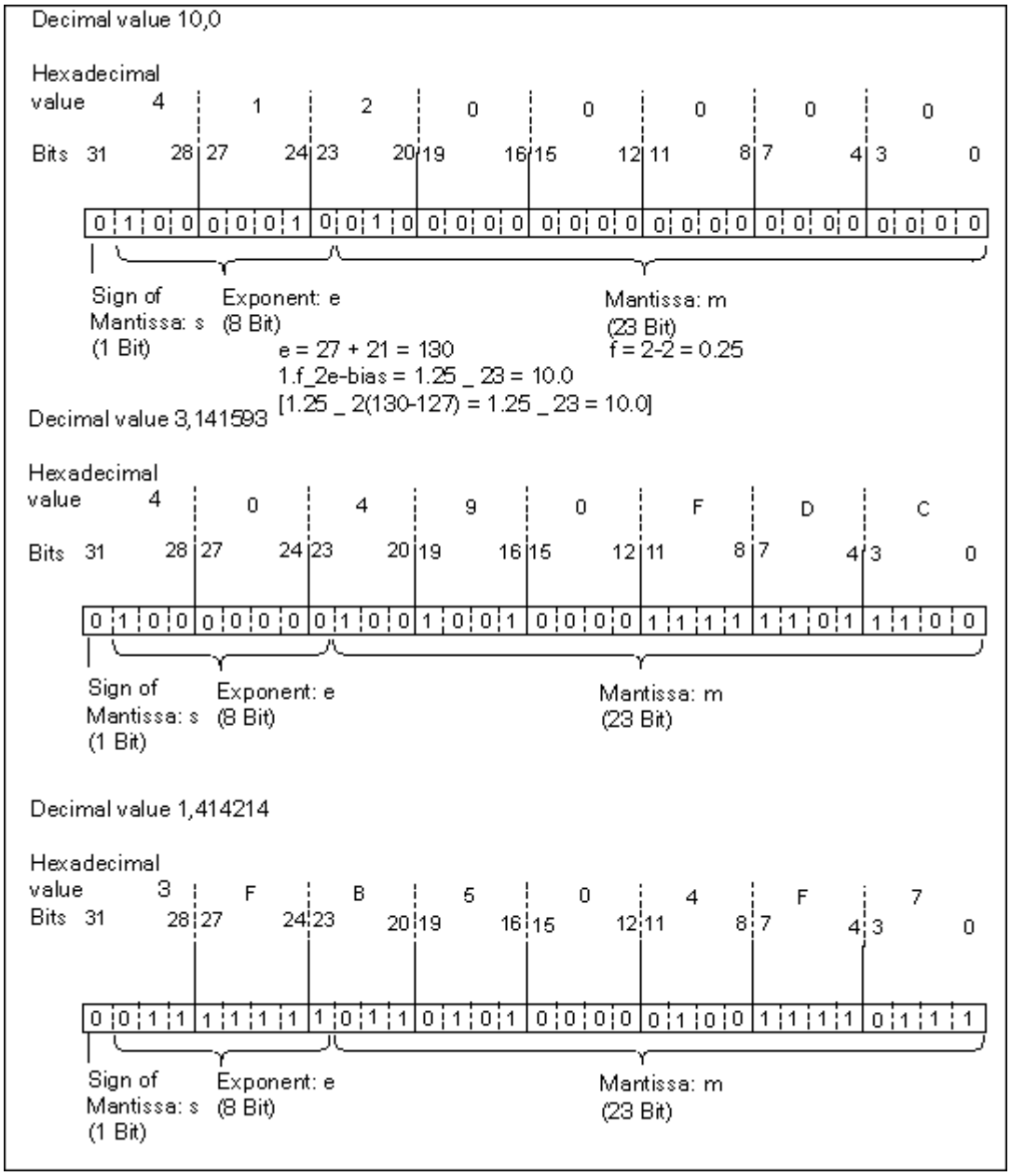

26.3.2.4 Format of the Data Types WORD and DWORD in Binary Coded Decimal Numbers

The binary-coded decimal (BCD) format represents a decimal number by using groups of binary digits (bits). One group of 4 bits represents one digit of a signed decimal number or the sign of the decimal number. The groups of 4 bits are combined to form a word (16 bits) or double word (32 bits). The four most significant bits indicate the sign of the number (1111 indicates minus and 0000 indicates plus). Commands with BCD-coded addresses only evaluate the highest-value bit (15 in word, 31 in double word format). The following table shows the format and range for the two types of BCD numbers.

Format	Range
Word (16 bits, three-digit BCD number with sign)	-999 to +999
Double word (32 bits, seven-digit BCD number with sign)	-9 999 999 to +9 999 999

The following figures provide an example of a binary coded decimal number in the following formats:

- Word format

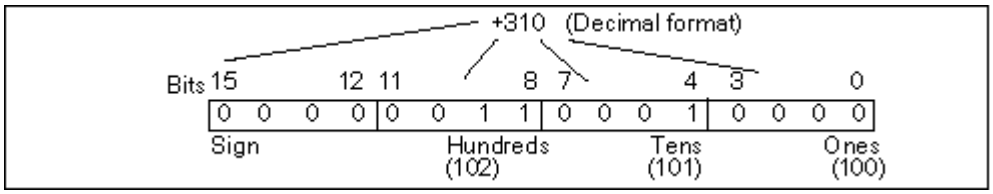

- Double word format

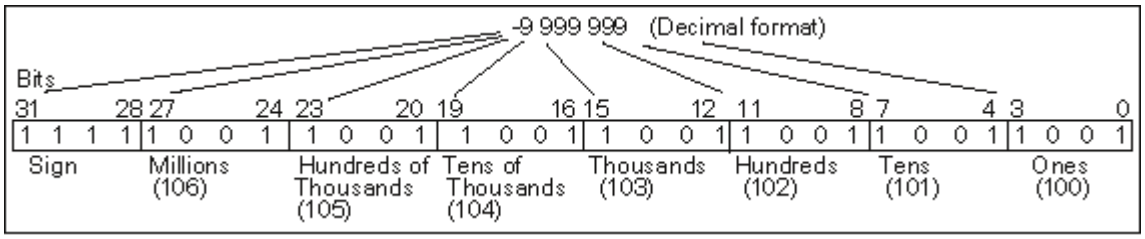

26.3.2.5 Format of the Data Type S5TIME (Time Duration)

When you enter time duration using the S5TIME data type, your entries are stored in binary coded decimal format. The following figure shows the content of the time address with a time value of 127 and a time base of 1 s.

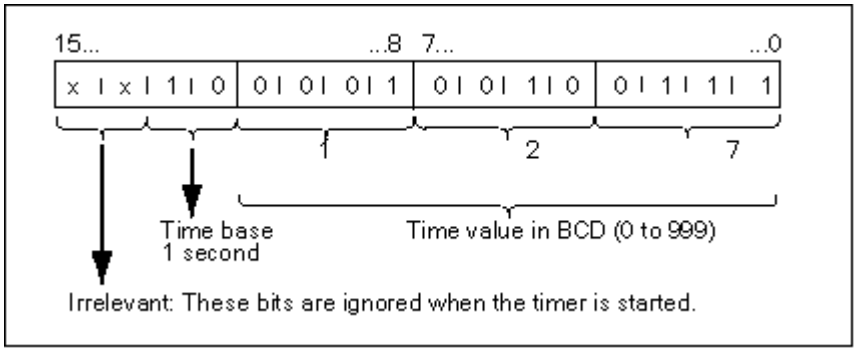

When working with S5TIME, you enter a time value in the range of 0 to 999 and you indicate a time base (see the following table). The time base indicates the interval at which a timer decrements the time value by one unit until it reaches 0.

Time base for S5TIME

Time Base	Binary Code for Time Base
10 ms	00
100 ms	01
1 s	10
10 s	11

You can pre-load a time value using either of the following syntax formats:

- L[1)] W#16#wxyz
  - Where w = time base (that is, the time interval or resolution)
  - Where xyz = the time value in binary coded decimal format
- L[1)] S5T#aH_bbM_ccS_dddMS
  - Where a = hours, bb = minutes, cc = seconds, and dd = milliseconds
  - The time base is selected automatically and the value is rounded to the next lower number with that time base.

The maximum time value that you can enter is 9,990 seconds, or 2H_46M_30S.

[1)] = L only to be specified in STL programming

26.3.3 Complex Data Types

Complex data types define data groups that are larger than 32 bits or data groups consisting of other data types. STEP 7 permits the following complex data types:

- DATE_AND_TIME
- STRING
- ARRAY
- STRUCT
- UDT (user-defined data types)
- FBs and SFBs

The following table describes the complex data types. You define structures and arrays either in the variable declaration of the logic block or in a data block.

Data Type	Description
DATE_AND_TIME DT	Defines an area with 64 bits (8 bytes). This data type saves in binary coded decimal format:
STRING	Defines a group with a maximum of 254 characters (data type CHAR). The standard area reserved for a character string is 256 bytes long. This is the space required to save 254 characters and a header of 2 bytes. You can reduce the memory required for a string by defining the number of characters that will be stored in the character string (for example: string[9] 'Siemens').
ARRAY	Defines a multi-dimensional grouping of one data type (either elementary or complex). For example: "ARRAY [1..2,1..3] OF INT" defines an array in the format 2 x 3 consisting of integers. You access the data stored in an array using the Index ("[2,2]"). You can define up to a maximum of 6 dimensions in one array. The index can be any integer (-32768 to 32767).
STRUCT	Defines a grouping of any combination of data types. You can, for example, define an array of structures or a structure of structures and arrays.
UDT	Simplifies the structuring of large quantities of data and entering data types when creating data blocks or declaring variables in the variable declaration. In STEP 7, you can combine complex and elementary data types to create your own "user-defined" data type. UDTs have their own name and can therefore be used more than once.
FB, SFB	You determine the structure of the assigned instance data block and allow the transfer of instance data for several FB calls in one instance DB.

Structured data types are saved in accordance with word limits (WORD aligned).

26.3.3.1 Format of the Data Type DATE_AND_TIME

When you enter date and time using the DATE_AND_TIME data type (DT), your entries are stored in binary coded decimal format in 8 bytes. The DATE_AND_TIME data type has the following range:

DT#1990-1-1-0:0:0.0 to DT#2089-12-31-23:59:59.999

The following examples show the syntax for the date and time for Thursday, December 25, 1993, at 8:12 and 34,567 seconds in the morning. The following two formats are possible:

- DATE_AND_TIME#1993-12-25-8:12:34.567
- DT#1993-12-25-8:12:34.567

The following special IEC (International Electrotechnical Commission) standard functions are available for working with the DATE_AND_TIME data type:

- Convert date and time of day to the DATE_AND_TIME format

  FC3: D_TOD_DT
- Extract the date from the DATE_AND_TIME format

  FC6: DT_DATE
- Extract the day of the week from the DATE_AND_TIME format

  FC7: DT_DAY
- Extract the time of day from the DATE_AND_TIME format

  FC8: DT_TOD

The following table shows the contents of the bytes that contain the date and time information for the example Thursday, December 25, 1993, at 8:12 and 34,567 seconds in the morning.

Byte	Contents	Example
0	Year	B#16#93
1	Month	B#16#12
2	Day	B#16#25
3	Hour	B#16#08
4	Minute	B#16#12
5	Second	B#16#34
6	Two most significant digits of MSEC	B#16#56
7 (4MSB)	Two least significant digits of MSEC	B#16#7
7 (4LSB)	Day of week 1 = Sunday 2 = Monday ... 7 = Saturday	B#16#_5

The permitted range for the data type DATE_AND_TIME is:

- min.: DT#1990-1-1-0:0:0.0
- max.: DT#2089-12-31-23:59:59.999

	Possible Value Range	**BCD Code**
Year	1990 - 1999 2000 - 2089	90 - 99 00 - 89
Month	1 - 12	01 - 12
Day	1 - 31	01 - 31
Hour	00 - 23	00 - 23
Minute	00 - 59	00 - 59
Second	00 - 59	00 - 59
Millisecond	0 - 999	000 - 999
Day of week	Sunday - Saturday	1 - 7

26.3.3.2 Using Complex Data Types

You can create new data types by combining the elementary and complex data types to create the following complex data types:

- Array (data type ARRAY): an array combines a group of one data type to form a single unit.
- Structure (data type STRUCT): a structure combines different data types to form a single unit.
- Character string (data type STRING): a character string defines a one-dimensional array with a maximum of 254 characters (data type CHAR). A character string can only be transferred as a unit. The length of the character string must match the formal and actual parameter of the block.
- Date and time (data type DATE_AND_TIME): the date and time data type stores the year, month, day, hours, minutes, seconds, milliseconds, and day of the week.

The following figure shows how arrays and structures can structure data types in one area and save information. You define an array or a structure either in a DB or in the variable declaration of an FB, OB, or FC.

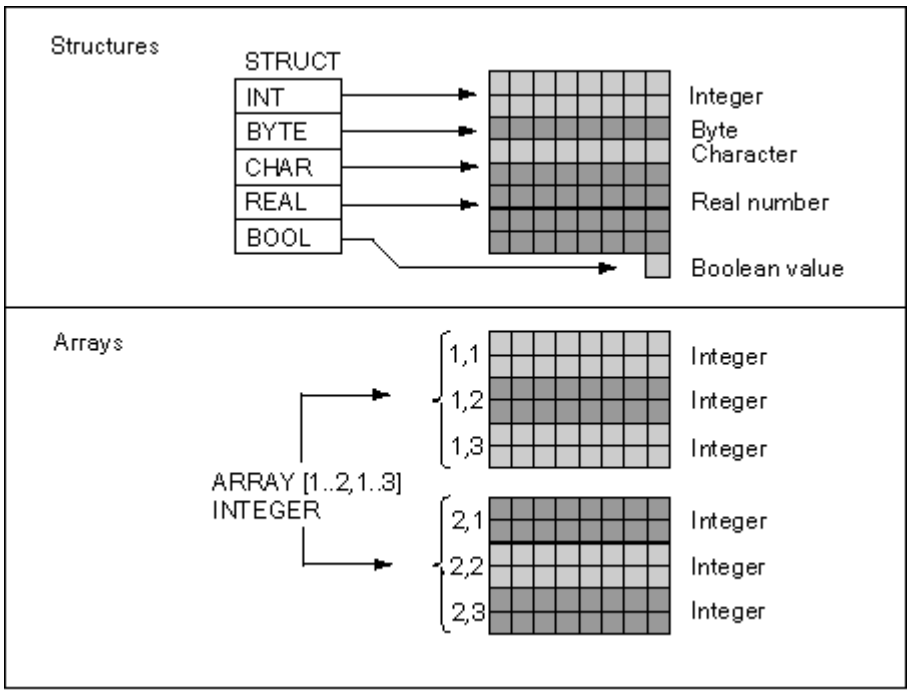

26.3.3.3 Using Arrays to Access Data

Arrays

An array combines a group of one data type (elementary or complex) to form a unit. You can create an array consisting of arrays. When you define an array, you must do the following:

- Assign a name to the array.
- Declare an array with the keyword ARRAY.
- Specify the size of the array using an index. You specify the first and last number of the individual dimensions (maximum 6) in the array. You enter the index in square brackets with each dimension separated by a comma and the first and last number of the dimension by two periods. The following index defines, for example, a three-dimensional array:

  [1..5,-2..3,30..32]
- You specify the data type of the data to be contained in the array.

Example: 1

The following figure shows an array with three integers. You access the data stored in an array using the index. The index is the number in square brackets. The index of the second integer, for example, is Op_temp[2].

An index can be any integer (-32768 to 32767) including negative values. The array in the following figure could also be defined as ARRAY [-1..1]. The index of the first integer would then be Op_temp[-1], the second would be Op_temp[0], and the third integer would then be Op_temp[1].

Address	Name	Type	Init. Value	Comment
0.0		STRUCT		
+0.0	Op_Temp	ARRAY [1..3]		
*2.0		INT		
=3.0		END_STRUCT		

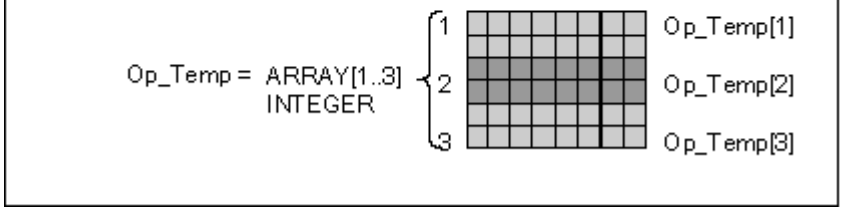

Example 2

An array can also describe a multi-dimensional group of data types. The following figure shows a two-dimensional array of integers.

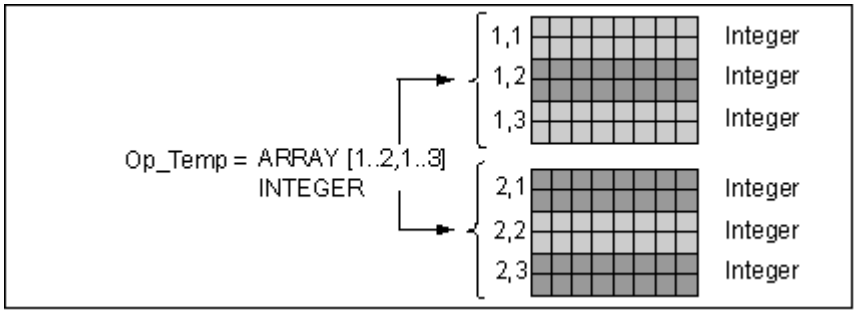

You access the data in a multi-dimensional array using the index. In this example, the first integer is Op_temp[1,1], the third is Op_temp[1,3], the fourth is Op_temp[2,1], and the sixth is Op_temp[2,3].

You can define up to a maximum of 6 dimensions (6 indexes) for an array. You could, for example, define the variable Op_temp as follows as a six-dimensional array:

ARRAY [1..3,1..2,1..3,1..4,1..3,1..4]

The index of the first element in this array is Op_temp[1,1,1,1,1,1]. The index of the last element Op_temp[3,2,3,4,3,4].

Creating Arrays

You define arrays when you declare the data in a DB or in the variable declaration. When you declare the array, you specify the keyword (ARRAY) followed by the size in square brackets, as follows:

[lower limit value..upper limit value]

In a multi-dimensional array you also specify the additional upper and lower limit values and separate the individual dimensions with a comma. The following figure shows the declaration for creating an array of the format 2 x 3.

Address	Name	Type	Init. Value	Comment
0.0		STRUCT		
+0.0	Heat_2X3	ARRAY[1..2,1..3]		
*2.0		INT		
=6.0		END_STRUCT		

Entering Initial Values for an Array

You can assign an initial value to every array element when you create arrays. STEP 7 provides two methods for entering initial values:

- Entry of individual values: for each element of the array, you specify a value that is valid for the data type of the array. You specify the values in the order of the elements: [1,1]. Remember that the individual elements must be separated from each other by a comma.
- Specifying a repetition factor: with sequential elements that have the same initial value, you can specify the number of elements (the repetition factor) and the initial value for these elements. The format for entering the repetition factor is *x(y)*, where *x* is the repetition factor and *y* is the value to be repeated.

If you use the array declared in the above figure, you can specify the initial value for all six elements as follows: 17, 23, -45, 556, 3342, 0. You could also set the initial value of all six elements to 10 by specifying 6(10). You could specify specific values for the first two elements and then set the remaining four elements to 0 by specifying the following: 17, 23, 4(0).

Accessing Data in an Array

You access data in an array via the index of the specific element in the array. The index is used with the symbolic name.

Example: If the array declared in the above figure begins at the first byte of DB20 (motor), you access the second element in the array with the following address:

Motor.Heat_2x3[1,2].

Using Arrays as Parameters

You can transfer arrays as parameters. If a parameter is declared in the variable declaration as ARRAY, you must transfer the entire array (and not individual elements). An element of an array can, however be assigned to a parameter when you call a block, providing the element of the array corresponds to the data type of the parameter.

If you use arrays as parameters, the arrays do not need to have the same name (they do not even need a name). Both arrays (the formal parameter and the actual parameter) must however have the same structure. An array in the format 2 x 3 consisting of integers, for example, can only be transferred as a parameter when the formal parameter of the block is defined as an array in the format 2 x 3 consisting of integers and the actual parameter that is provided by the call operation is also an array in the format 2 x 3 consisting of integers.

26.3.3.4 Using Structures to Access Data

Structures

A structure combines various data types (elementary and complex data types, including arrays and structures) to form one unit. You can group the data to suit your process control. You can therefore also transfer parameters as a data unit and not as single elements. The following figure illustrates a structure consisting of an integer, a byte, a character, a floating-point number, and a Boolean value.

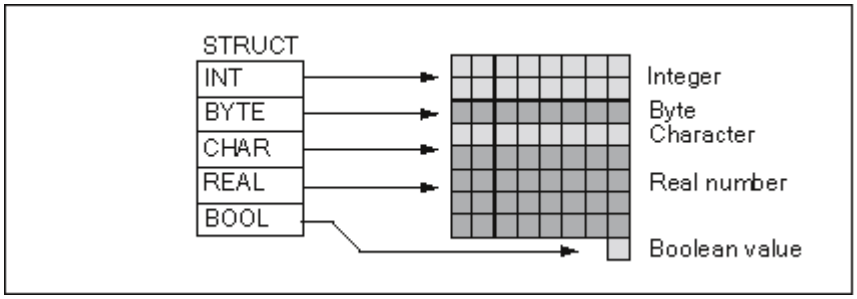

A structure can be nested to a maximum of 8 levels (for example, a structure consisting of structures containing arrays).

Creating a Structure

You define structures when you declare data within a DB or in the variable declaration of a logic block.

The following figure illustrates the declaration of a structure (*Stack_1*) that consists of the following elements: an integer (for saving the amount), a byte (for saving the original data), a character (for saving the control code), a floating-point number (for saving the temperature), and a Boolean memory bit (for terminating the signal).

Address	Name	Type	Init. value	Comment
0.0	Stack_1	STRUCT		
+0.0	Amount	INT	100	
+2.0	Original_data	BYTE		
+4.0	Control_code	CHAR		
+6.0	Temperature	REAL	120	
+8.0	End	BOOL	FALSE	
=10.0		END_STRUCT		

Assigning Initial Values for a Structure

If you want to assign an initial value to every element of a structure, you specify a value that is valid for the data type and the name of the element. You can, for example, assign the following initial values (to the structure declared in the above figure):

```
Amount       =   100
Original_data =  B#(0)
Control_code =   'C'
Temperature  =   120
End          =   False
```

Saving and Accessing Data in Structures

You access the individual elements of a structure. You can use symbolic addresses (for example, *Stack_1.Temperature*). You can, however, specify the absolute address at which the element is located (example: if Stack_1 is located in DB20 starting at byte 0, the absolute address for *amount* is *DB20.DBW0* and the address for *temperature* is *DB20.DBD6*).

Using Structures as Parameters

You can transfer structures as parameters. If a parameter is declared as STRUCT in the variable declaration, you must transfer a structure with the same components. An element of a structure can, however, also be assigned to a parameter when you call a block providing the element of the structure corresponds to the data type of the parameter.

If you use structures as parameters, both structures (for the formal parameters and the actual parameters) must have the same components, in other words the same data types must be arranged in the same order.

26.3.4 Parameter Types

In addition to elementary and complex data types, you can also define parameter types for formal parameters that are transferred between blocks. STEP 7 recognizes the following parameter types:

- TIMER or COUNTER: this specifies a particular timer or particular counter that will be used when the block is executed. If you supply a value to a formal parameter of the TIMER or COUNTER parameter type, the corresponding actual parameter must be a timer or a counter, in other words, you enter "T" or "C" followed by a positive integer.
- BLOCK: specifies a particular block to be used as an input or output. The declaration of the parameter determines the block type to be used (FB, FC, DB etc.). If you supply values to a formal parameter of the BLOCK parameter type, specify a block address as the actual parameter. Example: "FC101" (when using absolute addressing) or "Valve" (with symbolic addressing).
- POINTER: references the address of a variable. A pointer contains an address instead of a value. When you supply a value to a formal parameter of the parameter type POINTER, you specify an address as the actual parameter. In STEP 7, you can specify a pointer in the pointer format or simply as an address (for example, M 50.0). Example of a pointer format for addressing the data beginning at M 50.0: `P#M50.0`
- ANY: this is used when the data type of the actual parameter is unknown or when any data type can be used. For more information about the ANY parameter type, refer to the sections "Format of the Parameter Type ANY" and "Using the Parameter Type ANY".

A parameter type can also be used in a user-defined data type (UDT). For more information about UDTs, refer to the section "Using User-Defined Data Types to Access Data".

Parameter	Capacity	Description
TIMER	2 bytes	Indicates a timer to be used by the program in the called logic block. Format: `T1`
COUNTER	2 bytes	Indicates a counter to be used by the program in the called logic block. Format: `C10`
BLOCK_FB BLOCK_FC BLOCK_DB BLOCK_SDB	2 bytes	Indicates a block to be used by the program in the called logic block. Format: `FC101` `DB42`
POINTER	6 bytes	Identifies the address. Format: `P#M50.0`
ANY	10 Bytes	Is used when the data type of the current parameter is unknown. Format: `P#M50.0 BYTE 10` ANY format for data types `P#M100.0 WORD 5` `L#1COUNTER 10` ANY format for parameter types

26.3.4.1 Format of the Parameter Types BLOCK, COUNTER, TIMER

STEP 7 stores the parameter types BLOCK, COUNTER, and TIMER as binary numbers in a word (16 bits). The following figure shows the format of these parameter types.

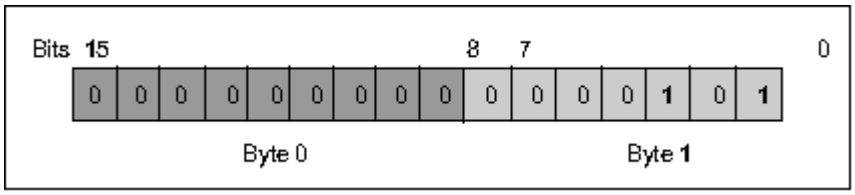

The permitted number of blocks, timers, and counters is dependent on the type of your S7 CPU. You will find more information on the permitted number of timers and counters and on the maximum number of available blocks in the data sheets for your CPU in the "S7-300 Programmable Controller, Hardware and Installation Manual" or in the "S7-400 Programmable Controller, Hardware and Installation Manual."

26.3.4.2 Format of the Parameter Type POINTER

The following figure shows the type of data that is stored in each byte.

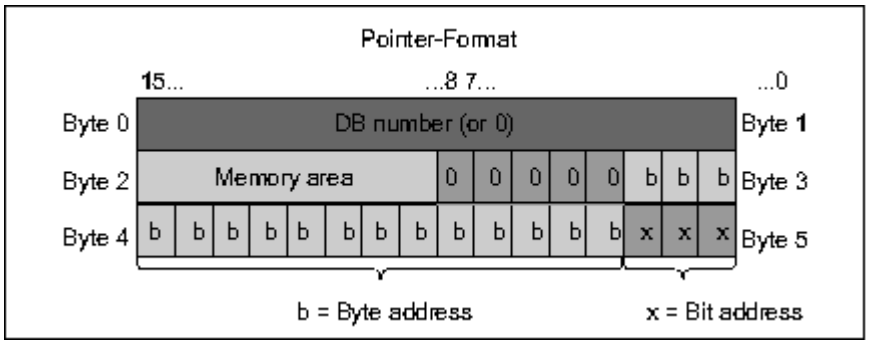

The parameter type POINTER stores the following information:

- DB number (or 0 if the data are not stored in a DB)
- Memory area in the CPU (the following table shows the hexadecimal codes of the memory areas for the parameter type POINTER)

Hexadecimal Code	Memory Area	Description
b#16#81	I	Input area
b#16#82	Q	Output area
b#16#83	M	Bit memory area
b#16#84	DB	Data block
b#16#85	DI	Instance data block
b#16#86	L	Local data (L stack)
b#16#87	V	Previous local data

- Address of the data (in the format Byte.Bit)

  STEP 7 provides the pointer format: p#memory_area byte.bit_address. (If the formal parameter was declared as the parameter type POINTER, you only need to indicate the memory area and the address. STEP 7 automatically reformats your entry into pointer format.) The following examples show how you enter the parameter type POINTER for the data that start at M50.0:

- P#M50.0
- M50.0 (if the formal parameter was declared as POINTER).

26.3.4.3 Using the Parameter Type POINTER

A pointer is used to point to an address. The advantage of this type of addressing is that you can modify the address of the statement dynamically during program processing.

Pointer for Memory-Indirect Addressing

Program statements that work with memory-indirect addressing are made up of an instruction, an address identifier, and an offset (the offset must be given in square brackets).

Example of a pointer in double word format:

L	P#8.7	Load the value of the pointer into accumulator 1.
T	MD2	Transfer the pointer to MD2.
A	I [MD2]	Query the signal state at input bit I 8.7 and
=	Q [MD2]	assign the signal state to output bit Q 8.7.

Pointer for Area-Internal and Area-Crossing Addressing

The program statements that work with these types of addressing are comprised of an instruction and the following parts: address identifier, address register identifier, offset.

The address register (AR1/2) and the offset must be specified together in square brackets.

Example for Area-Internal Addressing

The pointer contains no indication of a memory area:

L	P#8.7	Load the value of the pointer into accumulator 1.
LAR1		Load the pointer from accumulator 1 into AR1.
A	I [AR1, P#0.0]	Query the signal state at input bit I 8.7 and
=	Q [AR1, P#1.1]	assign the signal state to output bit Q 10.0.

The offset 0.0 has no influence. Output 10.0 is calculated from 8.7 (AR1) plus the offset 1.1. The result is 10.0 and not 9.8, see pointer format.

Example for Area-Crossing Addressing

In area-crossing addressing the memory area is indicated in the pointer (in the example I and Q).

L	P# I8.7	Load the value of the pointer and the area identification in accumulator 1.
LAR1		Load memory area I and the address 8.7 into AR1.
L	P# Q8.7	Load the value of the pointer and the area identification in accumulator 1.
LAR2		Load memory area Q and the address 8.7 into AR2.
A	[AR1, P#0.0]	Query the signal state at input bit I 8.7 and
=	[AR2, P#1.1]	assign the signal state to output bit Q 10.0.

The offset 0.0 has no influence. Output 10.0 is calculated from 8.7 (AR2) plus the offset 1.1. The result is 10.0 and not 9.8, see pointer format.

26.3.4.4 Block for Changing the Pointer

Using the sample block FC3 "Routing Pointers" it is possible to change the bit or byte address of a pointer. The pointer to be changed is transferred to the variable "pointer" when the FC is called (area-internal and area-crossing pointers in double word format can be used).

With the parameter "Bit-Byte" you can change the bit or byte address of the pointer (0: bit address, 1: byte address). The variable "Inc_Value" (in integer format) specifies the number that should be added to or subtracted from the address contents. You can also specify negative numbers to decrement the address.

With a bit address change, there is a carry over to the byte address (also when decrementing), for example:

- P#M 5.3, Bit_Byte = 0, Inc_Value = 6 => P#M 6.1 or
- P#M 5.3, Bit_Byte = 0, Inc_Value = -6 => P#M 4.5.

The area information of the pointer is not influenced by the function.

The FC intercepts an overflow/underflow of the pointer. In this case the pointer is not changed and the output variable "RET_VAL" (error handling possible) is set to "1" (until the next correct processing of FC3). This is the case where:

- 1. Bit address is selected and Inc_Value >7, or <-7
- 2. Bit or byte address is selected and the change would result in a "negative" byte address
- 3. Bit or byte address is selected and the change would result in an illegally large byte address.

Sample Block in STL to Change the Pointer

```
FUNCTION FC 3: BOOL
TITLE =Routing Pointers
//FC3 can be used to change pointers.
AUTHOR : AUT1CS1
FAMILY : INDADDR
NAME : ADDRPOINT
VERSION : 0.0

VAR_INPUT
   Bit_Byte : BOOL ; //0: Bit address, 1: byte address
   Inc_Value : INT ; //Increment (if value neg. => decrement/if value
pos. => increment)
END_VAR

VAR_IN_OUT
   Pointer : DWORD ; //Pointer to be changed
END_VAR
VAR_TEMP
   Inc_Value1 : INT ; //Interim value increment
   Pointer1 : DWORD ; //Interim value pointer
   Int_Value : DWORD ; //Auxiliary variable
END_VAR
BEGIN
```

```
NETWORK
TITLE =
//The block intercepts changes that change the area information of the
pointer
//or that lead to "negative" pointers automatically.
   SET   ; //Set RLO to 1 and
   R     #RET_VAL; //reset overflow
   L     #Pointer; //Supply value to temporary
   T     #Pointer1; //interim value pointer
   L     #Inc_Value; //Supply value of temporary
   T     #Inc_Value1; //interim value increment
   A     #Bit_Byte; //If =1, byte address instruction
   JC    Byte; //Jump to byte address calculation
   L     7; //If value of increment > 7,
   L     #Inc_Value1;
   <I    ;
   S     #RET_VAL; //then set RET_VAL and
   JC    End; //jump to End
   L     -7; //If value of increment < -7,
   <I    ;
   S     #RET_VAL; //then set RET_VAL and
   JC    End; //jump to End
   A     L     1.3; //If bit 4 of the value = 1 (Inc_Value negative)
   JC    neg; //then jump to bit address subtraction
   L     #Pointer1; //Load pointer address information
   L     #Inc_Value1; //and add the increment
   +D    ;
   JU    test; //Jump to test for negative result
neg:    L     #Pointer1; //Load pointer address information
   L     #Inc_Value1; //Load the increment
   NEGI  ; //Negate the negative value,
   -D    ; //subtract the value
   JU    test; //and jump to test
Byte:   L     0; //Start of byte address change
   L     #Inc_Value1; //If increment >=0, then
   <I    ;
   JC    pos; //jump to addition, otherwise
   L     #Pointer1; //Load pointer address information,
   L     #Inc_Value1; //load the increment,
   NEGI  ; //negate the negative value,
   SLD   3; //shift the increment 3 digits to the left,
   -D    ; //subtract the value,
   JU    test; //and jump to test
pos:    SLD   3; //Shift the increment 3 digits to the left
   L     #Pointer1; //Load pointer address information
```

```
   +D    ; //Add increment
test:    T     #Int_Value; //Transfer results of calculation to Int_Value
   A     L     7.3; //If invalid byte address (too large or
   S     #RET_VAL; //negative), then set RET_VAL
   JC    End; //and jump to End,
   L     #Int_Value; //otherwise transfer result
   T     #Pointer; //to pointer
End:     NOP   0;
END_FUNCTION
```

26.3.4.5 Format of the Parameter Type ANY

STEP 7 stores the parameter type ANY in 10 bytes. When constructing a parameter of the type ANY, you must ensure that all 10 bytes are occupied because the called block evaluates the whole contents of the parameter. If, for example, you specify a DB number in byte 4, you must also explicitly specify the memory area in byte 6.

STEP 7 manages the data of elementary and complex data types differently from the data for parameter types.

ANY Format for Data Types

For elementary and complex data types STEP 7 stores the following data:

- Data types
- Repetition factor
- DB number
- Memory area in which the information is stored
- Start address of the data

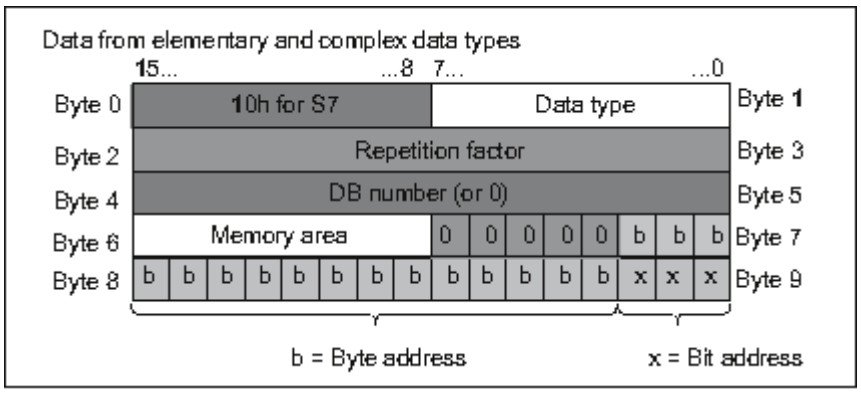

The repetition factor identifies a quantity of the indicated data type to be transferred by the parameter type ANY. This means you can specify a data area and also use arrays and structures in conjunction with the parameter type ANY. STEP 7 identifies arrays and structures as a number (with the help of the repetition factor) of data types. If, for example, 10 words are to be transferred, the value 10 must be entered for the repetition factor and the value 04 must be entered for the data type.

The address is stored in the format Byte.Bit where the byte address is stored in bits 0 to 2 of byte 7, in bits 0 to 7 of byte 8, and in bits 3 to 7 of byte 9. The bit address is stored in bits 0 to 2 of byte 9.

With a null pointer of the type NIL all bytes from byte 1 are assigned 0.

The following tables show the coding of the data types or of the memory areas for the parameter type ANY.

	Coding of the Data Types	
Hexadecimal Code	**Data Type**	**Description**
b#16#00	NIL	Null pointer
b#16#01	BOOL	Bits
b#16#02	BYTE	Bytes (8 bits)
b#16#03	CHAR	Characters (8 bits)
b#16#04	WORD	Words (16 bits)
b#16#05	INT	Integers (16 bits)
B#16#06	DWORD	Words (32 bits)
b#16#07	DINT	Double integers (32 bits)
b#16#08	REAL	Floating-point numbers (32 bits)
b#16#09	DATE	Date
b#16#0A	TIME_OF_DAY (TOD)	Time of day
b#16#0B	TIME	Time
b#16#0C	S5TIME	Data type S5TIME
b#16#0E	DATE_AND_TIME (DT)	Date and time (64 bits)
b#16#13	STRING	String

	Coding of the Memory Areas	
Hexadecimal Code	**Area**	**Description**
b#16#80	P	I/O area
b#16#81	I	Input area
b#16#82	Q	Output area
b#16#83	M	Bit memory area
b#16#84	DB	Data block
b#16#85	DI	Instance data block
b#16#86	L	Local data (L stack)
b#16#87	V	Previous local data

ANY Format for Parameter Types

For parameter types STEP 7 stores the data type and the address of the parameters. The repetition factor is always 1. Bytes 4, 5, and 7 are always 0. Bytes 8 and 9 indicate the number of the timer, counter, or block.

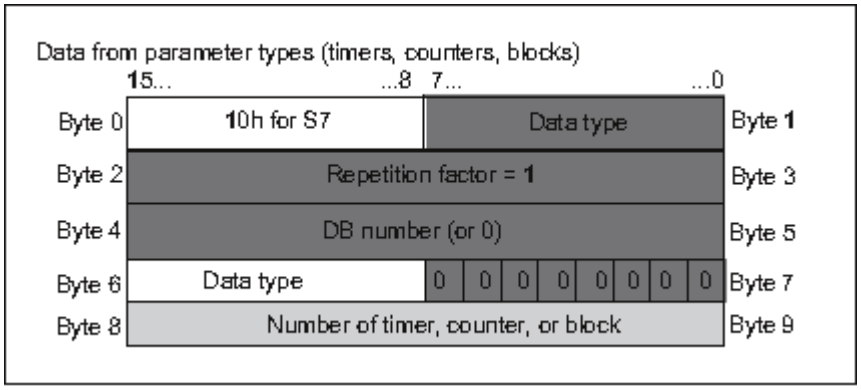

The following table shows the coding of the data types for the parameter type ANY for parameter types.

Hexadecimal Code	Data Type	Description
b#16#17	BLOCK_FB	FB number
b#16#18	BLOCK_FC	FC number
b#16#19	BLOCK_DB	DB number
b#16#1A	BLOCK_SDB	SDB number
b#16#1C	COUNTER	Counter number
b#16#1D	TIMER	Timer number

26.3.4.6 Using the Parameter Type ANY

You can define formal parameters for a block that are suitable for actual parameters of any data type. This is particularly useful when the data type of the actual parameter that is provided when the block is called is unknown or can vary (and when any data type is permitted). In the variable declaration of the block, you declare the parameter as data type ANY. You can then assign an actual parameter of any data type in STEP 7.

STEP 7 assigns 80 bits of memory for a variable of the ANY data type. If you assign an actual parameter to this formal parameter, STEP 7 codes the start address, the data type, and the length of the actual parameter in the 80 bits. The called block analyzes the 80 bits of data saved for the ANY parameter and obtains the information required for further processing.

Assigning an Actual Parameter to an ANY Parameter

If you declare the data type ANY for a parameter, you can assign an actual parameter of any data type to the formal parameter. In STEP 7, you can assign the following data types as actual parameters:

- Elementary data types: you specify the absolute address or the symbolic name of the actual parameter.
- Complex data types: you specify the symbolic name of the data with a complex data type (for example, arrays and structures).
- Timers, counters, and blocks: you specify the number (for example, T1, C20, or FB6).
- The following figure shows how data are transferred to an FC with parameters of the ANY data type.

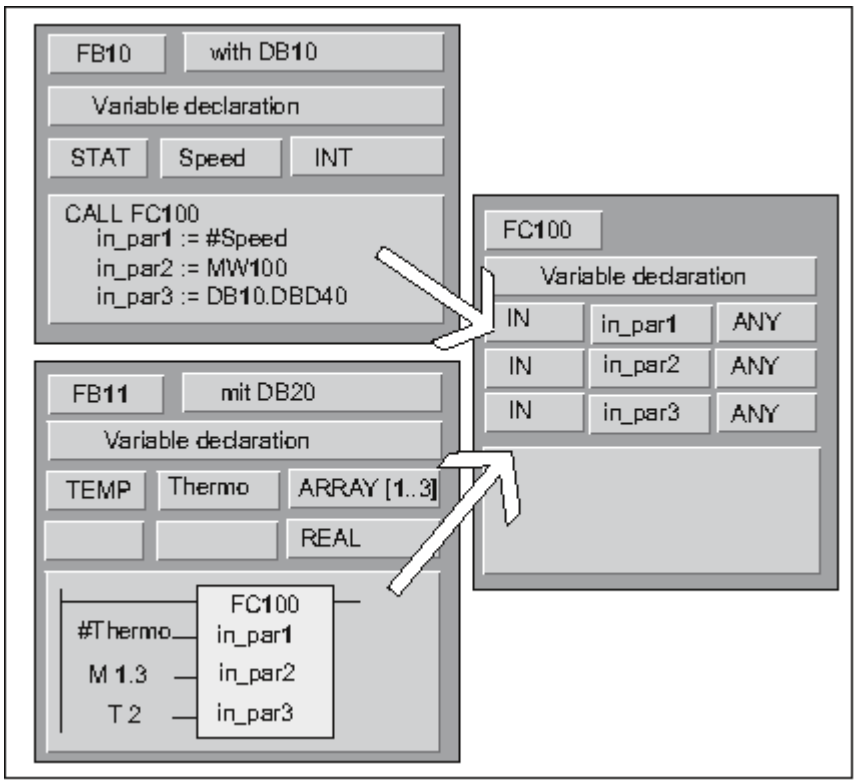

In this example, FC100 has three parameters (*in_par1*, *in_par2*, and *in_par3*) declared as the ANY data type.

- When FB10 calls FC100, FB10 transfers an integer (the static variable speed), a word (MW100), and a double word to DB10 (DB10.DBD40).
- When FB11 calls FC100, FB11 transfers an array of real numbers (the temporary variable "Thermo"), a Boolean value (M 1.3), and a timer (T2).

Specifying a Data Area for an ANY Parameter

You can assign not only individual addresses (for example, MW100) to an ANY parameter but you can also specify a data area. If you want to assign a data area as the actual parameter, use the following format of a constant to specify the amount of data to be transferred:

p# *Area ID Byte.Bit Data Type Repetition Factor*

For the *data type* element, you can specify all elementary data types and the data type DATE_AND_TIME in the format for constants. If the data type is not BOOL, the bit address of 0 (x.0) must be specified. The following table illustrates examples of the format for specifying memory areas to be transferred to an ANY parameter.

Actual Parameter	Description
p# M 50.0 BYTE 10	Specifies 10 bytes in the byte memory area: MB50 to MB59.
p# DB10.DBX5.0 S5TIME 3	Specifies 3 units of data of the data type S5TIME, that are located in DB10: DB byte 5 to DB byte 10.
p# Q 10.0 BOOL 4	Specifies 4 bits in the output area: Q 10.0 to Q 10.3.

Example for Using the Parameter Type ANY

The following example shows how you can copy a memory area of 10 bytes using the parameter type ANY and the system function SFC20 BLKMOV.

STL	Explanation
FUNCTION FC10: VOID	
VAR_TEMP	
Source : ANY;	
Target : ANY;	
END_VAR	
BEGIN	
LAR1 P#Source;	Load the start address of the ANY pointer in AR1.
L B#16#10;	Load the syntax ID and
T LB[AR1,P#0.0];	transfer it to the ANY pointer.
L B#16#02;	Load data type Byte and
T LB[AR1,P#1.0];	transfer it to the ANY pointer.
L 10;	Load 10 bytes and
T LW[AR1,P#2.0];	transfer them to the ANY pointer.
L 22;	Source is DB22, DBB11
T LW[AR1,P#4.0];	
L P#DBX11.0;	
T LD[AR1,P#6.0];	
LAR1 P#Target;	Load the start address of the ANY pointer in AR1.
L B#16#10;	Load the syntax ID and
T LB[AR1,P#0.0];	transfer it to the ANY pointer.
L B#16#02;	Load data type Byte and
T LB[AR1,P#1.0];	transfer it to the ANY pointer.
L 10;	Load 10 bytes and
T LW[AR1,P#2.0];	transfer them to the ANY pointer.
L 33;	Target is DB33, DBB202
T LW[AR1,P#4.0];	
L P#DBX202.0;	
T LD[AR1,P#6.0];	
CALL SFC 20 (	Call the system function BLKMOV
SRCBLK := Source,	
RET_VAL := MW 12,	Evaluate the BR bit and MW12
DSTBLK := Target	
);	
END_FUNCTION	

26.3.4.7 Assigning Data Types to Local Data of Logic Blocks

With STEP 7, the data types (elementary and complex data types and parameter types) that can be assigned to the local data of a block in the variable declaration are restricted.

Valid Data Types for the Local Data of an OB

The following table illustrates the restrictions (--) for declaring local data for an OB. Since you cannot call an OB, an OB cannot have parameters (input, output, or in/out). Since an OB does not have an instance DB, you cannot declare any static variables for an OB. The data types of the temporary variables of an OB can be elementary or complex data types and the data type ANY.

The valid assignments are shown by the ● symbol.

Declaration Type	Elementary Data Types	Complex Data Types	Parameter Type	Parameter Type	Parameter Type	Parameter Type	Parameter Type
			TIMER	COUNTER	BLOCK	POINTER	ANY
Input	--	--	--	--	--	--	--
Output	--	--	--	--	--	--	--
In/out	--	--	--	--	--	--	--
Static	--	--	--	--	--	--	--
Temporary	●(1)	●(1)	--	--	--	--	●(1)

(1) Located in the L stack of the OB.

Valid Data Types for the Local Data of an FB

The following table illustrates the restrictions (-) for declaring local data for an FB. Due to the instance DB, there are less restrictions when declaring local data for an FB. When declaring input parameters there are no restrictions whatsoever; for an output parameter you cannot declare any parameter types, and for in/out parameters only the parameter types POINTER and ANY are permitted. You can declare temporary variables as the ANY data type. All other parameter types are illegal.

The valid assignments are shown by the ● symbol.

Declaration Type	Elementary Data Types	Complex Data Types	Parameter Type	Parameter Type	Parameter Type	Parameter Type	Parameter Type
			TIMER	COUNTER	BLOCK	POINTER	ANY
Input	●	●	●	●	●	●	●
Output	●	●	--	--	--	--	--
In/out	●	●(1)(3)	--	--	--	●	●
Static	●	●	--	--	--	--	--
Temporary	●(2)	●(2)	--	--	--	--	●(2)

1 Stored as a reference (48-bit pointer) in the instance data block.

2 Located in the L stack of the FB.

3 STRINGS can be defined in the default length only.

Valid Data Types for the Local Data of an FC

The following table illustrates the restrictions (-) for declaring local data for an FC. Since an FC does not have an instance DB, it also has no static variables. For input, output, and in/out parameters of an FC, only the parameter types POINTER and ANY are permitted. You can also declare temporary variables of the ANY parameter type.

The valid assignments are shown by the ● symbol.

Declaration Type	Elementary Data Types	Complex Data Types	Parameter Type	Parameter Type	Parameter Type	Parameter Type	Parameter Type
			TIMER	COUNTER	BLOCK	POINTER	ANY
Input	●	●(2)	●	●	●	●	●
Output	●	●(2)	--	--	--	●	●
In/out	●	●(2)	--	--	--	●	●
Temporary	●(1)	●(1)	--	--	--	--	●(1)

1 Located in the L stack of the FC.

2 STRINGS can be defined in the default length only.

26.3.4.8 Permitted Data Types when Transferring Parameters

Rules for Transferring Parameters Between Blocks

When you assign actual parameters to formal parameters, you can specify either an absolute address, a symbolic name, or a constant. STEP 7 restricts the valid assignments for the various parameters. Output and in/out parameters, for example, cannot be assigned a constant value (since the purpose of an output or an in/out parameter is to change its value). These restrictions apply particularly to parameters with complex data types to which neither an absolute address nor a constant can be assigned.

The following tables illustrate the restrictions (--) involving the data types of actual parameters that are assigned to formal parameters.

The valid assignments are shown by the ● symbol.

		Elementary Data Types		
Declaration Type	**Absolute Address**	**Symbolic Name (in the Symbol Table)**	**Temporary Local Symbol**	**Constant**
Input	●	●	●	●
Output	●	●	●	--
In/out	●	●	●	--

		Complex Data Types		
Declaration Type	**Absolute Address**	**Symbolic Name of the DB Element (in the Symbol Table)**	**Temporary Local Symbol**	**Constant**
Input	--	●	●	--
Output	--	●	●	--
In/out	--	●	●	--

Valid Data Types for the Call of a Function by a Function

You can assign the formal parameters of a calling FC to the formal parameters of a called FC. The following figure illustrates the formal parameters of FC10 that are assigned as actual parameters to the formal parameters of FC12.

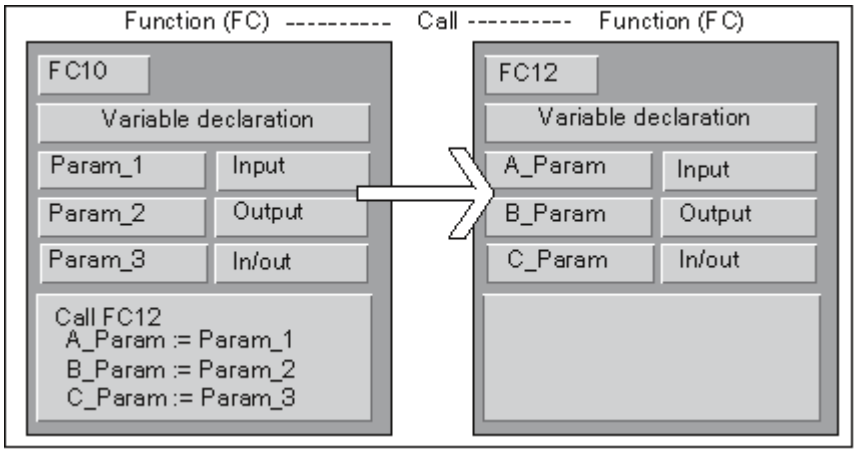

STEP 7 restricts the assignment of formal parameters of an FC as actual parameters for the formal parameters of a different FC. You cannot, for example, assign parameters with complex data types or a parameter type as the actual parameter.

The following table shows the permitted data types (●) when one FC calls another FC.

Declaration Type	Elementary Data Types	Complex Data Types	Parameter Type	Parameter Type	Parameter Type	Parameter Type	Parameter Type
			TIMER	COUNTER	BLOCK	POINTER	ANY
Input –> Input	●	--	--	--	--	--	--
Input –> Output	--	--	--	--	--	--	--
Input –> In/out	--	--	--	--	--	--	--
Output –> Input	--	--	--	--	--	--	--
Output –> Output	●	--	--	--	--	--	--
Output –> In/out	--	--	--	--	--	--	--
In/out –> Input	●	--	--	--	--	--	--
In/out –> Output	●	--	--	--	--	--	--
In/out –> In/out	●	--	--	--	--	--	--

Valid Data Types for the Call of a Function by a Function Block

You can assign the formal parameters of a calling FB to the formal parameters of a called FC. The following figure illustrates the formal parameters of FB10 that are assigned as actual parameters to the formal parameters of FC12.

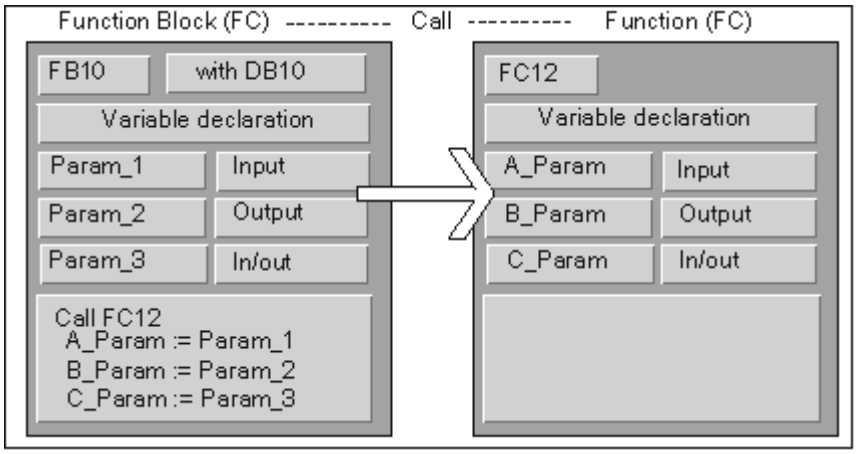

STEP 7 restricts the assignment of the formal parameters of an FB to the formal parameters of an FC. You cannot, for example, assign parameters of the parameter type as actual parameters. The following table shows the permitted data types (●) when an FB calls an FC.

Declaration Type	Elementary Data Types	Complex Data Types	Parameter Type	Parameter Type	Parameter Type	Parameter Type	Parameter Type
			TIMER	COUNTER	BLOCK	POINTER	ANY
Input –> Input	●	●	--	--	--	--	--
Input –> Output	--	--	--	--	--	--	--
Input –> In/out	--	--	--	--	--	--	--
Output –> Input	--	--	--	--	--	--	--
Output –> Output	●	●	--	--	--	--	--
Output –> In/out	--	--	--	--	--	--	--
In/out –> Input	●	--	--	--	--	--	--
In/out –> Output	●	--	--	--	--	--	--
In/out –> In/out	●	--	--	--	--	--	--

Valid Data Types for the Call of a Function Block by a Function

You can assign the formal parameters of a calling FC to the formal parameters of a called FB. The following figure illustrates the formal parameters of FC10 that are assigned as actual parameters to the formal parameters of FB12.

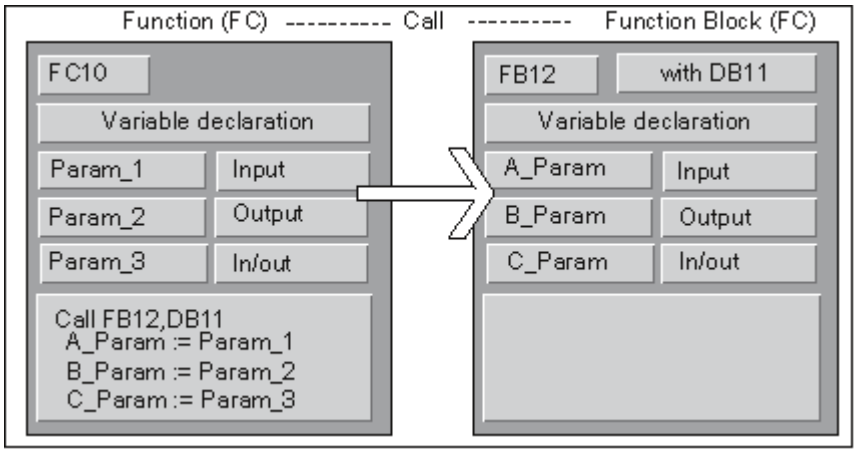

STEP 7 restricts the assignment of formal parameters of an FC to the formal parameters an FB. You cannot, for example, assign parameters with a complex data type as actual parameters. You can, however, assign input parameters of the parameter types TIMER, COUNTER, or BLOCK to the input parameters of the called FB.

The following table shows the permitted data types (●) when an FC calls an FB.

Declaration Type	Elementary Data Types	Complex Data Types	Parameter Type	Parameter Type	Parameter Type	Parameter Type	Parameter Type
			TIMER	COUNTER	BLOCK	POINTER	ANY
Input –> Input	●	--	●	●	●	--	--
Input –> Output	--	--	--	--	--	--	--
Input –> In/out	--	--	--	--	--	--	--
Output –> Input	--	--	--	--	--	--	--
Output –> Output	●	--	--	--	--	--	--
Output –> In/out	--	--	--	--	--	--	--
In/out –> Input	●	--	--	--	--	--	--
In/out –> Output	●	--	--	--	--	--	--
In/out –> In/out	●	--	--	--	--	--	--

Valid Data Types for the Call of a Function Block by a Function Block

You can assign the formal parameters of a calling FB to the formal parameters of a called FB. The following figure illustrates the formal parameters of FB10 that are assigned as actual parameters to the formal parameters of FB12.

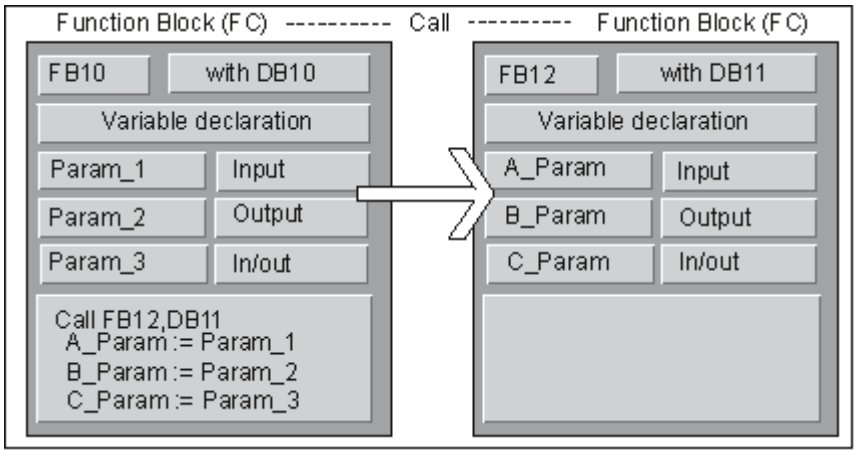

STEP 7 restricts the assignment of the formal parameters of an FB to the formal parameters of another FB. You cannot, for example, assign input and output parameters with complex data types as the actual parameters for the input and output parameters of a called FB. You can, however, assign input parameters of the parameter types TIMER, COUNTER, or BLOCK to the input parameters of the called FB.

The following table shows the permitted data types (●) when an FB calls another FB.

Declaration Type	Elementary Data Types	Complex Data Types	Parameter Type	Parameter Type	Parameter Type	Parameter Type	Parameter Type
			TIMER	COUNTER	BLOCK	POINTER	ANY
Input –> Input	●	●	●	●	●	--	--
Input –> Output	--	--	--	--	--	--	--
Input –> In/out	--	--	--	--	--	--	--
Output –> Input	--	--	--	--	--	--	--
Output –> Output	●	●	--	--	--	--	--
Output –> In/out	--	--	--	--	--	--	--
In/out –> Input	●	--	--	--	--	--	--
In/out –> Output	●	--	--	--	--	--	--
In/out –> In/out	●	--	--	--	--	--	--

26.3.4.9 Transferring to IN_OUT Parameters of a Function Block

When complex data types are transferred to IN_OUT parameters of a function block (FB) the address of the variable is transferred (call by reference).

When elementary data types are transferred to IN_OUT parameters of a function block the values are copied into the instance data block before the function block is started and copied out of the instance data block after the function block is ended.

This means IN_OUT variables of elementary data type can be initialized with a value.

It is not possible, however, to specify a constant in place of an IN_OUT variable as the actual parameter in a call because a constant cannot be written to.

Variables of the data type STRUCT or ARRAY cannot be initialized because only one address is in the instance data block in this case.

26.4 Working with Older Projects

26.4.1 Converting Version 2 Projects

In STEP 7 you can also open version 2 projects using the menu command **File > Open**.

Version 2 projects/libraries can be converted (migrated) to your current STEP 7 version using the menu command **File > Save As** and the option "Rearrange before saving." The project is then saved as a project with the current STEP 7 version.

You can edit projects and libraries from older STEP 7 versions retaining their format and save them by selecting the older STEP 7 version as the file type in the "Save Project As" dialog box. For example, to edit the objects with STEP 7 version 2.1, select "Project 2.x" or "Library 2.x" here (it is not possible to save as Version 2 as from Version 5.1 on. Also refer to Editing Version 2 projects and libraries).

Designation of the File Type

	STEP 7 V3	**From STEP 7 V4**
File type of the current version	Project3.x Library3.x	Project Library
File type of the older version	Project2.x Library2.x	Project2.x Library2.x

This means you only have access to the scope of functions of the older STEP 7 version. You can, however, still continue to manage the projects and libraries with the older STEP 7 version.

Note

The upgrade from version 3 to versions 4 and higher only involves a change in name: the format has remained identical. Therefore there is no file type "Project3.x" in STEP 7 V4.

Procedure

To convert version 2 projects to the format of the current STEP 7 version, proceed as follows:

1. Execute the "Save As" command in the File menu with the "Rearrange before saving" option for the project.
2. Select the file type "Project" in the "Save Project As" dialog box and click the "Save" button.

To convert version 2 projects to the current STEP 7 version while retaining their format, proceed as follows:

1. Execute step 1 above if necessary.
2. Select the file type of the older STEP 7 version in the "Save Project As" dialog box and click the "Save" button.

26.5 Expanding DP Slaves That Were Created with Previous Versions of STEP 7

Constellations That Can Be Formed by Importing New *.GSD Files

New DP slaves can be accepted by the HW Config if you install new device database files (*.GSD files) into the Hardware Catalog. After installation, they are available in the Other Field Devices folder.

You cannot reconfigure or expand a modular DP slave in the usual manner if all of the following conditions exist:

- The slave was configured with a previous version of STEP 7.
- The slave was represented in the Hardware Catalog by a type file rather than a *.GSD file.
- A new *.GSD file was installed over the slave.

Remedy

If you want to use the DP slave with new modules that are described in the *.GSD file:

- Delete the DP slave and configure it again. Then the DP slave is described completely by the *.GSD file, not by the type file.

If you do not want to use any new modules that are described only in the *.GSD file:

- Under PROFIBUS-DP in the Hardware Catalog window, select the "Other FIELD DEVICES/Compatible PROFIBUS-DP Slaves" folder. STEP 7 moves the "old" type files into this folder when they are replaced by new *.GSD files. In this folder you will find the modules with which you can expand the already configured DP slave.

Constellation after Replacement of Type Files by GSD Files in STEP 7 V5.1 Service Pack 4

As of STEP 7 V5.1, Service Pack 4, the type files have been either updated or largely replaced by GSD files. This replacement only affects the catalog profiles supplied with STEP 7, not any catalog profiles that you may have created yourself.

DP slaves whose properties were previously determined by type files and are now determined by GSD files are still located in the same place in the hardware catalog.

The "old" type files were not deleted but moved to another place in the hardware catalog. They are now located in the catalog folder "Other field devices\Compatible PROFIBUS DP slaves\...".

Expanding an Existing DP Configuration with STEP 7, as of V5.1 Service Pack 4

If you edit a project that was created with a previous version of STEP 7 (earlier than V5.1, SP4) and you want to expand a modular DP slave, then you cannot use the modules or submodules taken from the usual place in the hardware catalog. In this case, use the DP slave found at "Other FIELD DEVICES\Compatible PROFIBUS DP slaves\...".

Editing a DP Configuration with an Earlier Version of STEP 7 V5.1, SP4)

If you configure an "updated" DP slave with STEP 7 as of V5.1, Service Pack 4 and then edit the project with a previous version of STEP 7 (earlier than STEP 7 V5.1, SP4), you will not be able to edit this DP slave since the GSD file used is unknown to the previous version.

Remedy: You can install the required GSD file in the previous version of STEP 7. In this case, the GSD file is stored in the project. If the project is subsequently edited with the current STEP 7 version will use the newly installed GSD file for the configuration.

Notes on STEP 7 V.2.1 Projects with GD Communication

- If you want to convert a project with global data from STEP 7 V2.1 to STEP 7 V5, you must first open the GD table with STEP 7 V5.0 in the STEP 7 V2.1 project. The communication data configured previously are automatically converted into the new structure via GD communication.
- When you archive STEP 7 V2.1 projects, older programs (ARJ, PKZip...) may issue an error message if the project contains files with names which are more than eight characters in length. This message also appears if the MPI network in the STEP 7 V2.1 project was edited with an ID which is more than 8 characters in length. In STEP 7 V2.1 projects with global data, edit a name for the MPI network which is a maximum of eight characters in length before you start to configure global data communication for the first time.
- If you want to rename a STEP 7 V2.1 project, you must reassign the headings of the columns (CPUs) in the GD table by re-selecting the appropriate CPU. If you restore the old project name, the assignments are displayed once more.

26.5.1 DP-Slaves with Missing or Faulty GSD Files

If you process older station configurations with STEP 7 Version 5.1, it is possible in rare cases that the GSD file of a DP slave is missing or cannot be not compiled (for example, due to syntax errors in the GSD file).

In this case STEP 7 generates a "dummy" slave that represents the configured slave, for example after a station download to the programming device or after an older project has been opened and processed further. This "dummy" slave can only be processed to a limited extent. You cannot change the slave structure (DP identifiers) and the slave parameters. However, renewed downloading to the station is possible. The original configuration of the slave is retained. The complete DP slave can also be deleted.

Reconfiguring and Assigning Parameters to the DP Slave

If you wish to reconfigure or reassign parameters to the DP slave, you have to request an up-to-date GSD file for this DP slave from the manufacturer and make it available by using the menu command **Options > Install GSD Files**.

After the correct GSD file has been installed, it is used to represent the DP slave. The DP slave contains its data and can be processed again completely.

26.6 Sample Programs

26.6.1 Sample Projects and Sample Programs

The STEP 7 installation medium contains a number of useful sample projects that are listed below. You will find the sample projects in the "open" dialog of the SIMATIC Manager ("Sample Projects" tab). Other sample projects may also be added when optional packages are installed. For information on these sample projects, refer to the documentation for the optional packages.

Examples and Sample Projects	**Included on DVD**	**Described in this Documentation**	**Description in OB1**
"ZEn01_**01**_STEP7_*" to "ZEn01_**06**_STEP7_*" projects (getting started and exercises)	•	Separate Manual	•
"ZEn01_**11**_STEP7_DezP" project (sample PROFIBUS DP configuration)	•	-	-
"ZEn01_**08**_STEP7_Blending" project (industrial blending process)	•	•	-
"ZEn01_**09**_STEP7_Zebra" project (traffic signal control at a zebra crossing/crosswalk)	•		•
"Zen01_**10**_STEP7_COM_SFB" project (data exchange between two S7-400 CPUs)	•		•
"ZXX01_**14**_HSystem_S7400H project (starting project for fault-tolerant systems) "ZXX01_**15**_HSystem_RED_IO project (starting project for fault-tolerant systems with redundant I/O devices)	• •	Separate manual Separate manual	• •
"Zen01_**11**_STEP7_COM_SFC1" and "Zen01_**12**_STEP7_COM_SFC2" project (data exchange using communication SFCs for non-configured connections)	•		•
Project "ZEn01_**13**_STEP7_PID-Temp" (Example for temperature controllers FB 58 and FB 59)	•		•
Example of handling time-of-day interrupts		•	
Example of handling time-delay interrupts		•	
Example of masking and unmasking synchronous errors		•	
Example of disabling and enabling interrupts and asynchronous errors		•	
Example of the delayed processing of interrupts and asynchronous errors		•	

The emphasis of the examples is not on teaching a particular programming style or the specialist knowledge needed to control a particular process. The examples are simply intended to illustrate the steps that must be followed to design a program.

Deleting and Installing the Supplied Sample Projects

The supplied sample projects can be deleted in the SIMATIC Manager and then reinstalled. To install the sample projects, you must start the STEP 7 V5.0 setup program. The sample projects can be installed selectively at a later date. Copies of the supplied sample projects and self-created sample projects made using the menu command "Save As" can only be saved as user projects.

Note

When STEP 7 is installed, the supplied sample projects are copied, unless otherwise specified. If you have edited the supplied sample projects, these modified projects are overwritten with the originals when STEP 7 is reinstalled.

For this reason, you should copy the supplied sample projects before making any changes and then only edit the copies.

26.6.2 Sample Program for an Industrial Blending Process

The sample program is makes use of information that you have already read in part 1 of the manual about controlling an industrial blending process.

Task

Two ingredients (ingredient A and ingredient B) are mixed together in a mixing tank by an agitator. The finished product is drained from the tank through a drain valve. The following figure shows a diagram of the sample process.

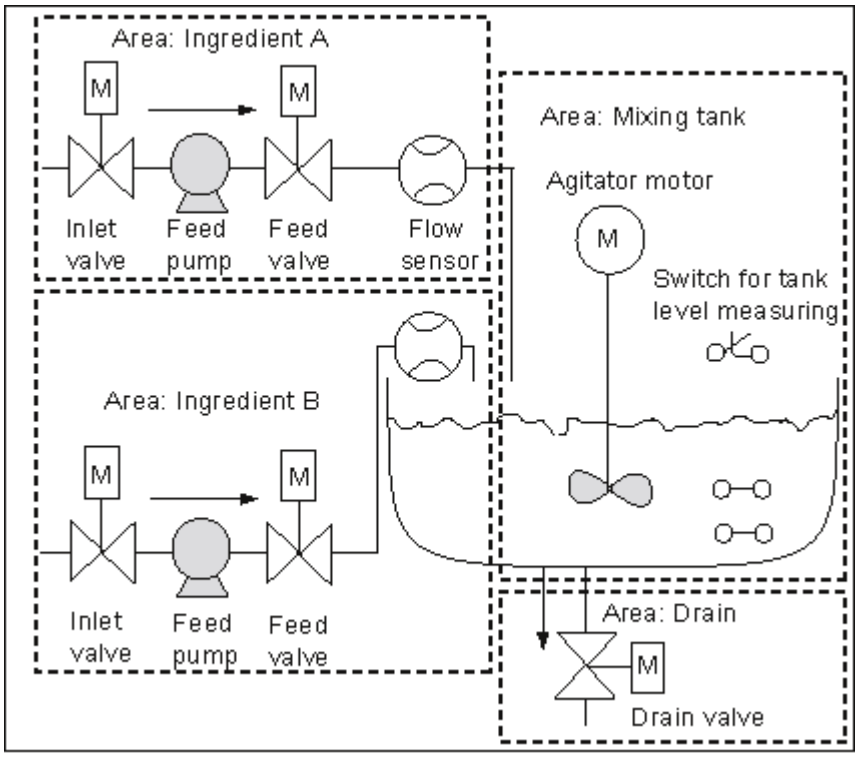

Describing the Parts of a Process

Part 1 of the manual included a description of how you divide up the sample process into functional areas and individual tasks. The individual areas are described below.

The area for ingredients A and B:

- The pipes for each of the ingredients are equipped with an inlet and a feed valve and feed pump.
- The inlet pipes also have flow sensors.
- Turning on the feed pumps must be interlocked when the tank level sensor indicates that the tank is full.
- The activation of the feed pumps must be interlocked when the drain valve is open.
- The inlet and feed valves must be opened at the earliest 1 second after starting the feed pump.
- The valves must be closed immediately after the feed pumps stop (signal from the flow sensor) to prevent ingredients leaking from the pump.
- The activation of the feed pumps is combined with a time monitoring function, in other words, within 7 seconds after the pumps start, the flow sensor must report a flow.
- The feed pumps must be turned off as quickly as possible if the flow sensor no longer signals a flow while the feed pumps are running.
- The number of times that the feed pumps are started must be counted (maintenance interval).

Mixing tank area:

- The activation of the agitator motor must be interlocked when the tank level sensor indicates "level below minimum" or the drain valve is open.
- The agitator motor sends a response signal after reaching the rated speed. If this signal is not received within 10 seconds after the motor is activated, the motor must be turned off.
- The number of times that the agitator motor starts must be counted (maintenance interval).
- Three sensors must be installed in the mixing tank:
  - Tank full: a normally closed contact. When the maximum tank level is reached, the contact is opened.
  - Level in tank above minimum: a normally open contact. If the minimum level is reached, the contact is closed.
  - Tank not empty: a normally open contact. If the tank is not empty, the contact is closed.

Drain area:

- Drainage of the tank is controlled by a solenoid valve.
- The solenoid valve is controlled by the operator, but must be closed again at the latest when the "tank empty" signal is generated.
- Opening the drain valve is interlocked when
  - the agitator motor is running
  - the tank is empty

Operator Station

To allow an operator to start, stop, and monitor the process, an operator station is also required. The operator station is equipped with the following:

- Switches for controlling the most important stages of the process. Using the "reset maintenance display" switch, you can turn off the maintenance display lamps for the motors due for maintenance and reset the corresponding counters for the maintenance interval to 0.
- Display lamps to indicate the status of the process.
- The emergency stop switch.

26.6.2.1 Defining Logic Blocks

You structure the program by distributing the user program in various blocks and by establishing a hierarchy for block calls.

Hierarchy of the Block Calls

The following figure shows the hierarchy of the blocks to be called in the structured program.

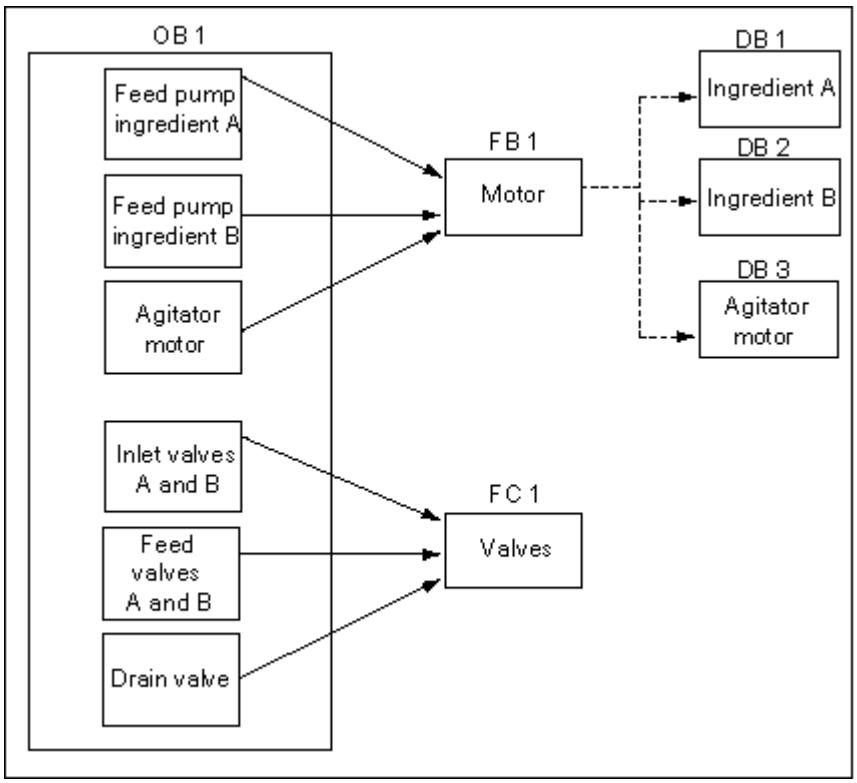

- OB1: The interface to the operating system of the CPU and contains the main program. In OB1 the blocks FB1 and FC1 are called and the specific parameters required to control the process are transferred.
- FB1: The feed pump for ingredient A, the feed pump for ingredient B and the agitator motor can be controlled by a single function block because the requirements (on, off, count applications etc.) are identical.
- Instance DB 1-3: The actual parameters and the static data for controlling the feed pumps for ingredient A, ingredient B and for the agitator motor are different and are therefore stored in three instance DBs associated with FB1.
- FC1: The inlet and feed valves for ingredients A and B and the drain valve also use a common logic block. As only the function "open and close" must be programmed, one single FC is sufficient.

26.6.2.2 Assigning Symbolic Names

Defining Symbolic Names

Symbols are used in the sample program and they must be defined in the symbol table using STEP 7. The following tables show the symbolic names and the absolute addresses of the program elements used.

Symbolic Addresses for Feed Pump, Agitator Motor, and Inlet Valves			
Symbolic Name	**Address**	**Data Type**	**Description**
Feed_pump_A_start	I0.0	BOOL	Starts the feed pump for ingredient A
Feed_pump_A_stop	I0.1	BOOL	Stops the feed pump for ingredient A
Flow_A	I0.2	BOOL	Ingredient A flowing
Inlet_valve_A	Q4.0	BOOL	Activates the inlet valve for ingredient A
Feed_valve_A	Q4.1	BOOL	Activates the feed valve for ingredient A
Feed_pump_A_on	Q4.2	BOOL	Lamp for "feed pump ingredient A running"
Feed_pump_A_off	Q4.3	BOOL	Lamp for "feed pump ingredient A not running"
Feed_pump_A	Q4.4	BOOL	Activates the feed pump for ingredient A
Feed_pump_A_fault	Q4.5	BOOL	Lamp for "feed pump A fault"
Feed_pump_A_maint	Q4.6	BOOL	Lamp for "feed pump A maintenance"
Feed_pump_B_start	I0.3	BOOL	Starts the feed pump for ingredient B
Feed_pump_B_stop	I0.4	BOOL	Stops the feed pump for ingredient B
Flow_B	I0.5	BOOL	Ingredient B flowing
Inlet_valve_B	Q5.0	BOOL	Activates the inlet valve for ingredient A
Feed_valve_B	Q5.1	BOOL	Activates the feed valve for ingredient B
Feed_pump_B_on	Q5.2	BOOL	Lamp for "feed pump ingredient B running"
Feed_pump_B_off	Q5.3	BOOL	Lamp for "feed pump ingredient B not running"
Feed_pump_B	Q5.4	BOOL	Activates the feed pump for ingredient B
Feed_pump_B_fault	Q5.5	BOOL	Lamp for "feed pump B fault"
Feed_pump_B_maint	Q5.6	BOOL	Lamp for "feed pump B maintenance"
Agitator_running	I1.0	BOOL	Response signal of the agitator motor
Agitator_start	I1.1	BOOL	Agitator start button
Agitator_stop	I1.2	BOOL	Agitator stop button
Agitator	Q8.0	BOOL	Activates the agitator
Agitator_on	Q8.1	BOOL	Lamp for "agitator running"
Agitator_off	Q8.2	BOOL	Lamp for "agitator not running"
Agitator_fault	Q8.3	BOOL	Lamp for "agitator motor fault"
Agitator_maint	Q8.4	BOOL	Lamp for "agitator motor maintenance"

Symbolic Addresses for Sensors and Displaying the Level of the Tank			
Symbolic Name	**Address**	**Data Type**	**Description**
Tank_below_max	I1.3	BOOL	Sensor "mixing tank not full"
Tank_above_min	I1.4	BOOL	Sensor "mixing tank above minimum level"
Tank_not_empty	I1.5	BOOL	Sensor "mixing tank not empty"
Tank_max_disp	Q9.0	BOOL	Lamp for "mixing tank full"
Tank_min_disp	Q9.1	BOOL	Lamp for "mixing tank below minimum level"
Tank_empty_disp	Q9.2	BOOL	Lamp for "mixing tank empty"

Symbolic Addresses for the Drain Valve			
Symbolic Name	**Address**	**Data Type**	**Description**
Drain_open	I0.6	BOOL	Button for opening the drain valve
Drain_closed	I0.7	BOOL	Button for closing the drain valve
Drain	Q9.5	BOOL	Activates the drain valve
Drain_open_disp	Q9.6	BOOL	Lamp for "drain valve open"
Drain_closed_disp	Q9.7	BOOL	Lamp for "drain valve closed"

Symbolic Addresses for the Other Program Elements			
Symbolic Name	**Address**	**Data Type**	**Description**
EMER_STOP_off	I1.6	BOOL	EMERGENCY STOP switch
Reset_maint	I1.7	BOOL	Reset switch for the maintenance lamps on all motors
Motor_block	FB1	FB1	FB for controlling pumps and motor
Valve_block	FC1	FC1	FC for controlling the valves
DB_feed_pump_A	DB1	FB1	Instance DB for controlling feed pump A
DB_feed_pump_B	DB2	FB1	Instance DB for controlling feed pump B
DB_agitator	DB3	FB1	Instance DB for controlling the agitator motor

26.6.2.3 Creating the FB for the Motor

What is Required of the FB?

The FB for the motor contains the following logical functions:

- There is a start and a stop input.
- A series of interlocks allow the operation of the devices (pumps and agitator motor). The status of the interlocks is saved in the temporary local data (L stack) of OB1 ("Motor_enable," "Valve_enable") and is logically combined with the start and stop inputs when the FB for the motor is processed.
- Feedback from the devices must appear within a certain time. Otherwise, it is assumed that an error or fault has occurred. The function then stops the motor.
- The point in time and the duration of the response or error/fault cycle must be specified.
- If the start button is pressed and the motor enabled, the device switches itself on and runs until the stop button is pressed.
- When the device is switched on, a timer starts to run. If the response signal from the device is not received before the timer has expired, the device stops.

Specifying the Inputs and Outputs

The following figure shows the inputs and outputs of the general FB for the motor.

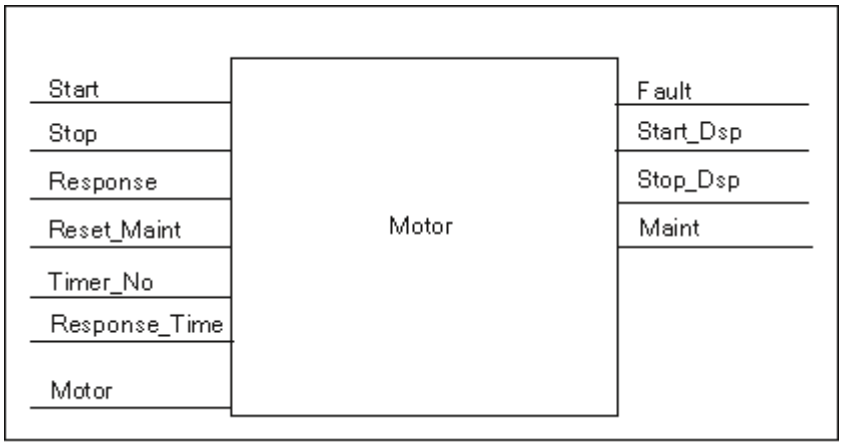

Defining the Parameters for the FB

If you use a multiple instance FB for the motor (for controlling both pumps and the motor) you must define general parameter names for the inputs and outputs.

The FB for the motor in the sample process requires the following:

- It must have signals from the operator station to stop and start the motor and pumps.
- It requires a response signal from the motor and pumps to indicate that the motor is running.
- It must calculate the time between sending the signal to activate the motor and receiving the response signal. If no response signal is received in this time, the motor must be switched off.
- It must turn the lamps on the operator station on and off.
- It supplies a signal to activate the motor.

These requirements can be specified as inputs and outputs to the FB. The following table shows the parameters of the FB for the motor in our sample process.

Parameter Name	Input	Output	In/Out
Start	x		
Stop	x		
Response	x		
Reset_Maint	x		
Timer_No	x		
Response_Time	x		
Fault		x	
Start_Dsp		x	
Stop_Dsp		x	
Maint		x	
Motor			x

Declaring the Variables of the FB for the Motor

You must declare the input, output, and in/out parameters of the FB for the motor.

Address	Declaration	Name	Type	Initial Value
0.0	IN	Start	BOOL	FALSE
0.1	IN	Stop	BOOL	FALSE
0.2	IN	Response	BOOL	FALSE
0.3	IN	Reset_Maint	BOOL	FALSE
2.0	IN	Timer_No	TIMER	
4.0	IN	Response_Time	S5TIME	S5T#0MS
6.0	OUT	Fault	BOOL	FALSE
6.1	OUT	Start_Dsp	BOOL	FALSE
6.2	OUT	Stop_Dsp	BOOL	FALSE
6.3	OUT	Maint	BOOL	FALSE
8.0	IN_OUT	Motor	BOOL	FALSE
10.0	STAT	Time_bin	WORD	W#16#0
12.0	STAT	Time_BCD	WORD	W#16#0
14.0	STAT	Starts	INT	0
16.0	STAT	Start_Edge	BOOL	FALSE

With FBs, the input, output, in/out, and static variables are saved in the instance DB specified in the call statement. The temporary variables are stored in the L stack.

Programming the FB for the Motor

In STEP 7, every block that is called by a different block must be created before the block containing its call. In the sample program, you must therefore create the FB for the motor before OB1.

The code section of FB1 appears as follows in the STL programming language:

Network 1 Start/stop and latching

```
A(
O       #Start
O       #Motor
)
AN      #Stop
=       #Motor
```

Network 2 Startup monitoring

```
A       #Motor
L       #Response_Time
SD      #Timer_No
AN      #Motor
R       #Timer_No
L       #Timer_No
T       #Time_bin
LC      #Timer_No
T       #Time_BCD
A       #Timer_No
AN      #Response
S       #Fault
R       #Motor
```

Network 3 Start lamp and fault reset

```
A       #Response
=       #Start_Dsp
R       #Fault
```

Network 4 Stop lamp

```
AN      #Response
=       #Stop_Dsp
```

Network 5 Counting the starts

```
A       #Motor
FP      #Start_Edge
JCN     lab1
L       #Starts
+       1
T       #Starts

lab1: NOP       0
```

Network 6 Maintenance lamp

```
L       #Starts
L       50
>=I
=       #Maint
```

Network 7 Reset counter for number of starts

```
A     #Reset_Maint
A     #Maint
JCN   END
L     0
T     #Starts

END: NOP   0
```

Creating the Instance Data Blocks

Create three data blocks and open them one after another. In the "New Data Block" dialog box select the option "Data block referencing a function block." In the "Reference" list box select "FB1." The data blocks are then specified as instance data blocks with a fixed assignment to FB1.

26.6.2.4 Creating the FC for the Valves

What is Required of the FC?

The function for the inlet and feed valves and for the drain valve contains the following logical functions:

- There is an input for opening and an input for closing the valves.
- Interlocks allow the valves to be opened. The state of the interlocks is saved in the temporary local data (L stack) of OB1 ("Valve_enable") and is logically combined with the inputs for opening and closing when the FC for the valves is processed.

The following table shows the parameters that must be transferred to the FC.

Parameters for the Valves	Input	Output	In/Out
Open	x		
Close	x		
Dsp_Open		x	
Dsp_Closed		x	
Valve			x

Specifying the Inputs and Outputs

The following figure shows the inputs and outputs of the general FC for the valves. The devices that call the FB for the motor transfer input parameters. The FC for the valves returns output parameters.

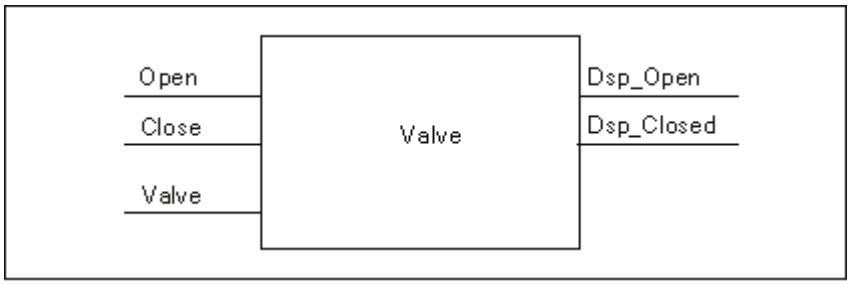

Declaring the Variables of the FC for the Valves

Just as with the FB for the motor, you must also declare the input, output, and in/out parameters for the FC for the valves (see following variable declaration table).

Address	Declaration	Name	Type	Initial Value
0.0	IN	Open	BOOL	FALSE
0.1	IN	Close	BOOL	FALSE
2.0	OUT	Dsp_Open	BOOL	FALSE
2.1	OUT	Dsp_Closed	BOOL	FALSE
4.0	IN_OUT	Valve	BOOL	FALSE

With FCs, the temporary variables are saved in the L stack. The input, output, and in/out variables are saved as pointers to the logic block that called the FC. Additional memory space in the L stack (after the temporary variables) is used for these variables.

Programming the FC for the Valves

The FC1 function for the valves must be created before OB1 since the called blocks must be created before the calling blocks.

The code section of FC1 appears as shown below in the STL programming language:

Network 1 Open/close and latching

```
A(
O       #Open
O       #Valve
)
AN      #Close
=       #Valve
```

Network 2 Display "valve open"

```
A       #Valve
=       #Dsp_Open
```

Network 3 Display "valve closed"

```
AN      #Valve
=       #Dsp_Closed
```

26.6.2.5 Creating OB1

OB1 decides the structure of the sample program. OB1 also contains the parameters that are transferred to the various functions, for example:

- The STL networks for the feed pumps and the agitator motor supply the FB for the motor with the input parameters for starting ("Start"), stopping ("Stop"), for the response ("Response"), and for resetting the maintenance display ("Reset_Maint"). The FB for the motor is processed in every cycle of the PLC.
- If the FB for the motor is processed, the inputs Timer_No and Response_Time inform the function of the timer being used and which time must be measured.
- The FC for the valves and the FB for the motors are processed in every program cycle of the programmable controller because they are called in OB1.

The program uses the FB for the motor with different instance DBs to handle the tasks for controlling the feed pumps and the agitator motor.

Declaring Variables for OB1

The variable declaration table for OB1 is shown below. The first 20 bytes contain the start information of OB1 and must not be modified.

Address	Declaration	Name	Type
0.0	TEMP	OB1_EV_CLASS	BYTE
1.0	TEMP	OB1_SCAN1	BYTE
2.0	TEMP	OB1_PRIORITY	BYTE
3.0	TEMP	OB1_OB_NUMBR	BYTE
4.0	TEMP	OB1_RESERVED_1	BYTE
5.0	TEMP	OB1_RESERVED_2	BYTE
6.0	TEMP	OB1_PREV_CYCLE	INT
8.0	TEMP	OB1_MIN_CYCLE	INT
10.0	TEMP	OB1_MAX_CYCLE	INT
12.0	TEMP	OB1_DATE_TIME	DATE_AND_TIME
20.0	TEMP	Enable_motor	BOOL
20.1	TEMP	Enable_valve	BOOL
20.2	TEMP	Start_fulfilled	BOOL
20.3	TEMP	Stop_fulfilled	BOOL
20.4	TEMP	Inlet_valve_A_open	BOOL
20.5	TEMP	Inlet_valve_A_closed	BOOL
20.6	TEMP	Feed_valve_A_open	BOOL
20.7	TEMP	Feed_valve_A_closed	BOOL
21.0	TEMP	Inlet_valve_B_open	BOOL
21.1	TEMP	Inlet_valve_B_closed	BOOL
21.2	TEMP	Feed_valve_B_open	BOOL
21.3	TEMP	Feed_valve_B_closed	BOOL
21.4	TEMP	Open_drain	BOOL
21.5	TEMP	Close_drain	BOOL
21.6	TEMP	Valve_closed_fulfilled	BOOL

Creating the Program for OB1

In STEP 7, every block that is called by a different block must be created before the block containing its call. In the sample program, you must therefore create both the FB for the motor and the FC for the valves before the program in OB1.

The blocks FB1 and FC1 are called more than once in OB1; FB1 is called with different instance DBs:

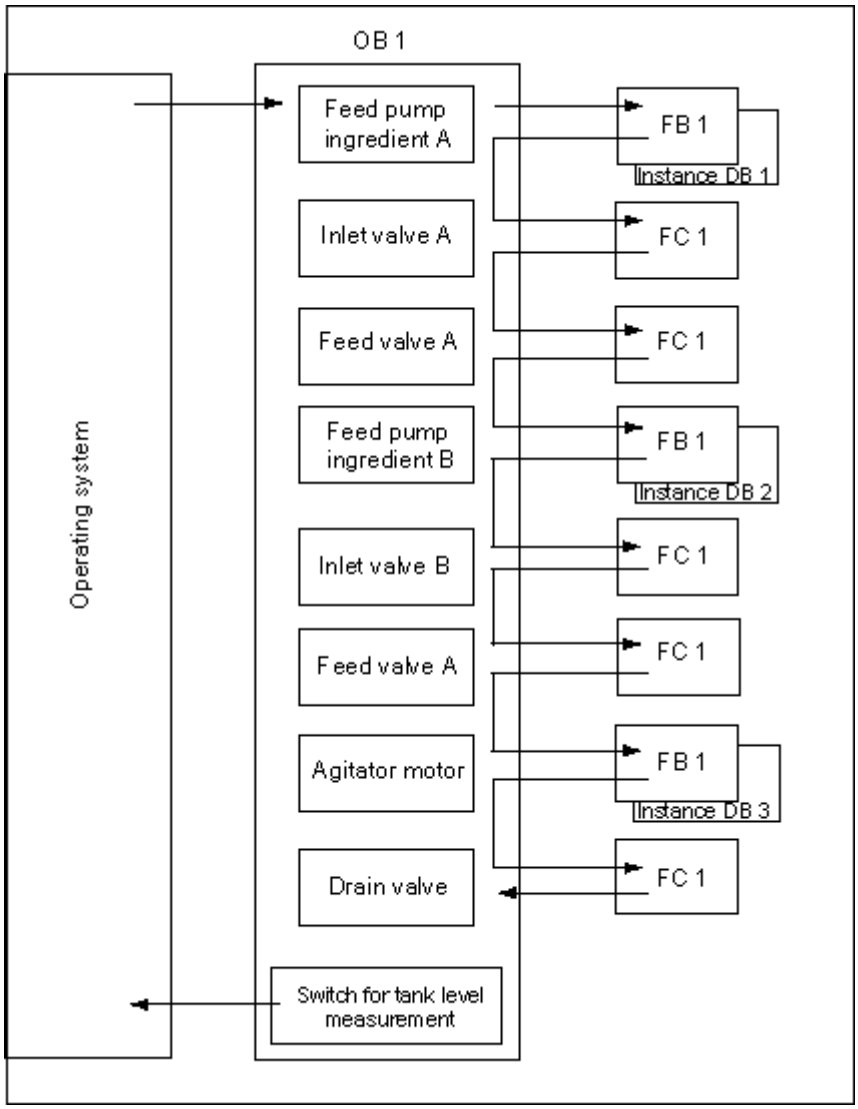

The code section of OB1 appears as shown below in the STL programming language:

Network 1 Interlocks for feed pump A

```
A       "EMER_STOP_off"
A       "Tank_below_max"
AN      "Drain"
=       #Enable_Motor
```

Network 2 Calling FB Motor for ingredient A

```
A               "Feed_pump_A_start"
A               #Enable_Motor
=               #Start_Fulfilled
A(
O               "Feed_pump_A_stop"
ON      #Enable_Motor
)
=               #Stop_Fulfilled
CALL    "Motor_block", "DB_feed_pump_A"
        Start    :=#Start_Fulfilled
        Stop     :=#Stop_Fulfilled
        Response        :="Flow_A"
        Reset_Maint     :="Reset_maint"
        Timer_No        :=T12
        Reponse_Time:=S5T#7S
        Fault    :="Feed_pump_A_fault"
        Start_Dsp       :="Feed_pump_A_on"
        Stop_Dsp        :="Feed_pump_A_off"
        Maint    :="Feed_pump_A_maint"
        Motor    :="Feed_pump_A"
```

Network 3 Delaying the valve enable ingredient A

```
A       "Feed_pump_A"
L       S5T#1S
SD      T       13
AN      "Feed_pump_A"
R       T       13
A       T       13
=       #Enable_Valve
```

Network 4 Inlet valve control for ingredient A

```
AN      "Flow_A"
AN      "Feed_pump_A"
=               #Close_Valve_Fulfilled
CALL    "Valve_block"
        Open     :=#Enable_Valve
        Close    :=#Close_Valve_Fulfilled
        Dsp_Open        :=#Inlet_Valve_A_Open
        Dsp_Closed:=#Inlet_Valve_A_Closed
        Valve    :="Inlet_Valve_A"
```

Network 5 Feed valve control for ingredient A

```
AN    "Flow_A"
AN    "Feed_pump_A"
=             #Close_Valve_Fulfilled
CALL  "Valve_block"
      Open    :=#Enable_Valve
      Close   :=#Close_Valve_Fulfilled
      Dsp_Open      :=#Feed_Valve_A_Open
      Dsp_Closed:=#Feed_Valve_A_Closed
      Valve   :="Feed_Valve_A"
```

Network 6 Interlocks for feed pump B

```
A     "EMER_STOP_off"
A     "Tank_below_max"
AN    "Drain"
=     "Enable_Motor
```

Network 7 Calling FB Motor for ingredient B

```
A             "Feed_pump_B_start"
A             #Enable_Motor
=             #Start_Fulfilled
A(
O             "Feed_pump_B_stop"
ON    #Enable_Motor
)
=             #Stop_Fulfilled
CALL  "Motor_block", "DB_feed_pump_B"
      Start   :=#Start_Fulfilled
      Stop    :=#Stop_Fulfilled
      Response      :="Flow_B"
      Reset_Maint   :="Reset_maint"
      Timer_No      :=T14
      Reponse_Time:=S5T#7S
      Fault   :="Feed_pump_B_fault"
      Start_Dsp     :="Feed_pump_B_on"
      Stop_Dsp      :="Feed_pump_B_off"
      Maint   :="Feed_pump_B_maint"
      Motor   :="Feed_pump_B"
```

Network 8 Delaying the valve enable ingredient B

```
A     "Feed_pump_B"
L     S5T#1S
SD    T       15
AN    "Feed_pump_B"
R     T       15
A     T       15
=     #Enable_Valve
```

Network 9 Inlet valve control for ingredient B

```
AN    "Flow_B"
AN    "Feed_pump_B"
=             #Close_Valve_Fulfilled
CALL  "Valve_block"
      Open    :=#Enable_Valve
      Close   :=#Close_Valve_Fulfilled
      Dsp_Open      :=#Inlet_Valve_B_Open
      Dsp_Closed:=#Inlet_Valve_B_Closed
      Valve   :="Inlet_Valve_B"
```

Network 10 Feed valve control for ingredient B

```
AN    "Flow_B"
AN    "Feed_pump_B"
=             #Close_Valve_Fulfilled
CALL  "Valve_block"
      Open    :=#Enable_Valve
      Close   :=#Close_Valve_Fulfilled
      Dsp_Open      :=#Feed_Valve_B_Open
      Dsp_Closed:=#Feed_Valve_B_Closed
      Valve   :="Feed_Valve_B"
```

Network 11 Interlocks for agitator

```
A     "EMER_STOP_off"
A     "Tank_above_min"
AN    "Drain"
=     #Enable_Motor
```

Network 12 Calling FB Motor for agitator

```
A             "Agitator_start"
A             #Enable_Motor
=             #Start_Fulfilled
A(
O             "Agitator_stop"
ON    #Enable_Motor
)
=             #Stop_Fulfilled
CALL  "Motor_block", "DB_Agitator"
      Start   :=#Start_Fulfilled
      Stop    :=#Stop_Fulfilled
      Response      :="Agitator_running"
      Reset_Maint   :="Reset_maint"
      Timer_No      :=T16
      Reponse_Time:=S5T#10S
      Fault   :="Agitator_fault"
      Start_Dsp     :="Agitator_on"
      Stop_Dsp      :="Agitator_off"
      Maint   :="Agitator_maint"
      Motor   :="Agitator"
```

Network 13 Interlocks for drain valve

```
A       "EMER_STOP_off"
A       "Tank_not_empty"
AN      "Agitator"
=       "Enable_Valve
```

Network 14 Drain valve control

```
A               "Drain_open"
A               #Enable_Valve
=               #Open_Drain
A(
O               "Drain_closed"
ON      #Enable_Valve
)
=               #Close_Drain
CALL    "Valve_block"
        Open    :=#Open_Drain
        Close   :=#Close_Drain
        Dsp_Open        :="Drain_open_disp"
        Dsp_Closed      :="Drain_closed_disp"
        Valve   :="Drain"
```

Network 15 Tank level display

```
AN      "Tank_below_max"
=       "Tank_max_disp"
AN      "Tank_above_min"
=       "Tank_min_disp"
AN      "Tank_not_empty"
=       "Tank_empty_disp"
```

26.6.3 Example of Handling Time-of-Day Interrupts

Structure of the User Program "Time-of-Day Interrupts"

FC12

OB10

OB1 and OB80

26.6.3.1 Structure of the User Program "Time-of-Day Interrupts"

Task

Output Q 4.0 should be set in the time from Monday, 5.00 am to Friday, 8.00 pm. In the time from Friday, 8.00 pm to Monday, 5.00 am the output Q 4.0 should be reset.

Translating into a User Program

The following table shows the sub-tasks of the blocks used.

Block	Sub-Task
OB1	Calls the function FC12
FC12	Depending on the state of the output Q 4.0, the time-of-day interrupt status, and the inputs I 0.0 and I 0.1 • Specify the starting time • Set the time-of-day interrupt • Activate the time-of-day interrupt • CAN_TINT
OB10	Depending on the current day of the week • Specify the starting time • Set or reset output Q 4.0 • Set next time-of-day interrupt • Activate next time-of-day interrupt
OB80	Set output Q 4.1 Store start event information of OB80 in bit memory area

Addresses Used

The following table shows the shared addresses used. The temporary local variables are declared in the declaration section of the respective block.

Address	Meaning
I0.0	Input to enable "set time-of-day interrupt" and "activate time-of-day interrupt"
I0.1	Input to cancel a time-of-day interrupt
Q4.0	Output set/reset by the time-of-day interrupt OB (OB10)
Q4.1	Output set by a time error (OB80)
MW16	STATUS of the time-of-day interrupt (SFC31 "QRY_TINT")
MB100 to MB107	Memory for start event information of OB10 (time-of-day only)
MB110 to MB129	Memory for start event information of OB80 (time error)
MW200	RET_VAL of SFC28 "SET_TINT"
MB202	Binary result (status bit BR) buffer for SFCs
MW204	RET_VAL of SFC30 "ACT_TINT"
MW208	RET_VAL of SFC31 "QRY_TINT"

System Functions and Functions Used

The following system functions are used in the programming example:

- SFC28 "SET_TINT" : Set Time-of-Day Interrupt
- SFC29 "CAN_TINT" : Cancel Time-of-Day Interrupt
- SFC30 "ACT_TINT" : Activate Time-of-Day Interrupt
- SFC31 "QRY_TINT" : Query Time-of-Day Interrupt
- FC3 "D_TOD_DT" : Combine DATE and TIME_OF_DAY to DT

26.6.3.2 FC12

Declaration Section

The following temporary local variables are declared in the declaration section of FC12:

Variable Name	Data Type	Declaration	Comment
IN_TIME	TIME_OF_DAY	TEMP	Start time
IN_DATE	DATE	TEMP	Start date
OUT_TIME_DATE	DATE_AND_TIME	TEMP	Start date/time converted
OK_MEMORY	BOOL	TEMP	Enable for setting time-of-day interrupt

STL Code Section

Enter the following STL user program in the code section of FC12:

```
STL (FC12)                    Explanation
Network 1
      CALL SFC 31             SFC QRY_TINT
       OB_NO  := 10           Query STATUS of time-of-day interrupts
       RET_VAL:= MW 208
       STATUS := MW 16

Network 2:
      AN    Q     4.0        Specify start time dependent on Q 4.0 (in
      JC    mond               variable
      L     D#1995-1-27       #IN_DATE and #IN_TIME)
      T     #IN_DATE          Start date is a Friday
      L     TOD#20:0:0.0
      T     #IN_TIME
      JU    cnvt
mond: L     D#1995-1-23
      T     #IN_DATE          Start date is a Monday
      L     TOD#5:0:0.0
      T     #IN_TIME
cnvt: NOP   0
```

```
STL (FC12)                    Explanation
Network 3:
      CALL FC 3               Convert format from DATE and TIME_OF_DAY to
       IN1     := #IN_DATE    DATE_AND_TIME (for setting time-of-day
       IN2     := #IN_TIME    interrupt)
       RET_VAL :=
#OUT_TIME_DATE
Network 4:                    All requirements for setting time-of-day
      A     I 0.0             interrupt fulfilled? (Input for enable set
      AN    M 17.2            and time-of-day interrupt not active and
      A     M 17.4            time-of-day interrupt OB is loaded)
      =     #OK_MERKER        If yes, set time-of-day interrupt...
Network 5:
      A     #OK_MERKER
      JNB   m001
      CALL SFC 28             ...and activate time-of-day interrupt.
       OB_NO   := 10
       SDT     :=
#OUT_TIME_DATE
       PERIOD  :=
W#16#1201
       RET_VAL := MW 200
m001 :      A     BR
      =     M 202.3
Network 6:                    If input for canceling time-of-day
      A     #OK_MERKER        interrupts is set, cancel time-of-day
      JNB   m002              interrupt.
      CALL SFC 30
       OB_NO   := 10
       RET_VAL := MW 204
m002 :      A     BR
      =     M 202.4
Network 7:
      A     I 0.1
      JNB   m003
      CALL SFC 29
       OB_NO   := 10
       RET_VAL := MW 210
m003 :      A     BR
      =     M 202.5
```

26.6.3.3 OB10

Declaration Section

In contrast to the default declaration section of OB10 the following temporary local variables are declared:

- Structure for the entire start event information (STARTINFO)
- Within the STARTINFO structure a structure for the time (T_STMP)
- Other temporary local variables WDAY, IN_DATE, IN_TIME, and OUT_TIME_DATE

Variable Name	Data Type	Declaration	Comment
STARTINFO	STRUCT	TEMP	Entire start event information of OB10 declared as structure
E_ID	WORD	TEMP	Event ID:
PR_CLASS	BYTE	TEMP	Priority class
OB_NO	BYTE	TEMP	OB number
RESERVED_1	BYTE	TEMP	Reserved
RESERVED_2	BYTE	TEMP	Reserved
PERIOD	WORD	TEMP	Periodicity of time-of-day interrupt
RESERVED_3	DWORD	TEMP	Reserved
T_STMP	STRUCT	TEMP	Structure for time-of-day details
YEAR	BYTE	TEMP	
MONTH	BYTE	TEMP	
DAY	BYTE	TEMP	
HOUR	BYTE	TEMP	
MINUTES	BYTE	TEMP	
SECONDS	BYTE	TEMP	
MSEC_WDAY	WORD	TEMP	
	END_STRUCT	TEMP	
	END_STRUCT	TEMP	
WDAY	INT	TEMP	Day of the week
IN_DATE	DATE	TEMP	Input variable for FC3 (conversion of time format)
IN_TIME	TIME_OF_DAY	TEMP	Input variable for FC3 (conversion of time format)
OUT_TIME_DATE	DATE_AND_TIME	TEMP	Output variable for FC3 and input variable for SFC28

STL Code Section

Enter the following STL user program in the code section of OB10:

```
STL (OB10)                          Explanation
Network 1
  L                                 Select day of week
  #STARTINFO.T_STMP.MSEC_WDAY
  L   W#16#F
  AW                                and store.
  T   #WDAY
Network 2:                          If day of week is not Monday, then
  L   #WDAY                         specify Monday, 5.00 am as next
  L   2                             starting time and reset output Q 4.0.
  <>I
  JC  mond
Network 3:                          Otherwise, if day of week is Monday,
  L   D#1995-1-27                   specify Friday, 8.00 pm (20.00) as next
  T   #IN_DATE                      starting time and set output Q 4.0.
  L   TOD#20:0:0.0
  T   #IN_TIME
  SET
  =   Q 4.0
  JU  cnvt

mond: L     D#1995-1-23
  T   #IN_DATE
  L   TOD#5:0:0.0
  T   #IN_TIME                      Starting time specified.
  CLR                               Convert specified starting time to
  =   Q 4.0                         format DATE_AND_TIME (for SFC28).

cnvt: NOP   0
Network 4:                          Set time-of-day interrupt.
  CALLFC 3
   IN1     := #IN_DATE
   IN2     := #IN_TIME
   RET_VAL := #OUT_TIME_DATE
Network 5:
  CALL SFC 28
   OB_NO  := 10
   SDT    := #OUT_TIME_DATE
   PERIOD  := W#16#1201
   RET_VAL := MW 200
  A   BR
  =   M 202.1
Network 6:
  CALL SFC 30                       Activate time-of-day interrupt.
   OB_NO  := 10
   RET_VAL := MW 204
  A   BR
  =   M 202.2
Network 7:
  CALL SFC 20                       Block transfer: save time of day from
   SRCBLK  := #STARTINFO.T_STMP     start event information of OB10 to the
   RET_VAL := MW 206                memory area MB100 to MB107.
   DSTBLK  := P#M 100.0 BYTE  8
```

26.6.3.4 OB1 and OB80

As the start event information of OB1 (OB for cyclic program) is not evaluated in this example, only the start event information of OB80 is displayed.

OB1 Code Section

Enter the following STL user program in the code section of OB1:

```
STL (OB1)                                Explanation
      CALL  FC 12                        Calls the function FC12
```

OB80 Declaration Section

In contrast to the default declaration section of OB80 the following temporary local variables are declared:

- Structure for the entire start event information (STARTINFO)
- Within the STARTINFO structure a structure for the time (T_STMP)

Variable Name	Data Type	Declaration	Comment
STARTINFO	STRUCT	TEMP	Entire start event information of OB80 declared as structure
E_ID	WORD	TEMP	Event ID:
PR_CLASS	BYTE	TEMP	Priority class
OB_NO	BYTE	TEMP	OB number
RESERVED_1	BYTE	TEMP	Reserved
RESERVED_2	BYTE	TEMP	Reserved
A1_INFO	WORD	TEMP	Additional information about the event that caused the error
A2_INFO	DWORD	TEMP	Additional information about the event ID, priority class, and OB no. of the error
T_STMP	STRUCT	TEMP	Structure for time-of-day details
YEAR	BYTE	TEMP	
MONTH	BYTE	TEMP	
DAY	BYTE	TEMP	
HOUR	BYTE	TEMP	
MINUTES	BYTE	TEMP	
SECONDS	BYTE	TEMP	
MSEC_WDAY	WORD	TEMP	
	END_STRUCT	TEMP	
	END_STRUCT	TEMP	

OB80 Code Section

Enter the following STL user program in the code section of OB80 that is called by the operating system if a time error occurs:

```
STL (OB80)                                  Explanation
Network 1
  AN  Q 4.1                                 Set output Q 4.1 if time error
  S   Q 4.1                                 occurred.

  CALL SFC 20                               Block transfer: save entire
   SRCBLK  := #STARTINFO                    start event information to
   RET_VAL := MW 210                        memory area MB110 to MB129.
   DSTBLK  := P#M 110.0 Byte 20
```

26.6.4 Example of Handling Time-Delay Interrupts

26.6.4.1 Structure of the User Program "Time-Delay Interrupts"

Task

When input I 0.0 is set, output Q 4.0 should be set 10 seconds later. Every time input I 0.0 is set, the delay time should be restarted.

The time (seconds and milliseconds) of the start of the time-delay interrupt should appear as a user-specific ID in the start event information of the time-delay interrupt OB (OB20).

If I 0.1 is set in these 10 seconds, the organization block OB20 should not be called; meaning the output Q 4.0 should not be set.

When input I 0.2 is set, output Q 4.0 should be reset.

Translating into a User Program

The following table shows the sub-tasks of the blocks used.

Block	Sub-Task
OB1	Read current time and prepare for start of time-delay interrupt Dependent on edge change at input I 0.0, start time-delay interrupt Depending on the status of the time-delay interrupt and the edge change at input I 0.1, cancel time-delay interrupt Dependent on the state of input I 0.2, reset output Q 4.0
OB20	Set output Q 4.0 Read and prepare current time Save start event information to bit memory area

Addresses Used

The following table shows the shared addresses used. The temporary local variables are declared in the declaration section of the respective block.

Address	Meaning
I0.0	Input to enable "start time-delay interrupt"
I0.1	Input to cancel a time-delay interrupt
I0.2	Input to reset output Q 4.0
Q4.0	Output set by the time-delay interrupt OB (OB20)
MB1	Used for edge flag and binary result (status bit BR) buffer for SFCs
MW4	STATUS of time-delay interrupt (SFC34 "QRY_TINT")
MD10	Seconds and milliseconds BCD-coded from the start event information of OB1
MW 100	RET_VAL of SFC32 "SRT_DINT"
MW102	RET_VAL of SFC34 "QRY_DINT"
MW104	RET_VAL of SFC33 "CAN_DINT"
MW106	RET_VAL of SFC20 "BLKMOV"
MB120 to MB139	Memory for start event information of OB20
MD140	Seconds and milliseconds BCD-coded from the start event information of OB20
MW144	Seconds and milliseconds BCD-coded from the start event information of OB1; acquired from start event information of OB20 (user-specific ID SIGN)

System Functions Used

The following SFCs are used in the user program "time-delay interrupts:"

- SFC32 "SRT_DINT" : Start Time-Delay Interrupt
- SFC33 "CAN_DINT" : Cancel Time-Delay Interrupt
- SFC34 "QRY_DINT" : Query Status of a Time-Delay Interrupt

26.6.4.2 OB20

Declaration Section

In contrast to the default declaration section of OB20 the following temporary local variables are declared:

- Structure for the entire start event information (STARTINFO)
- Within the STARTINFO structure a structure for the time (T_STMP)

Variable Name	Data Type	Declaration	Comment
STARTINFO	STRUCT	TEMP	Start information for OB20
E_ID	WORD	TEMP	Event ID:
PC_NO	BYTE	TEMP	Priority class
OB_NO	BYTE	TEMP	OB number
D_ID 1	BYTE	TEMP	Data ID 1
D_ID 2	BYTE	TEMP	Data ID 2
SIGN	WORD	TEMP	User-specific ID
DTIME	TIME	TEMP	Time with which the time-delay interrupt is started
T_STMP	STRUCT	TEMP	Structure for time-of-day details (time stamp)
YEAR	BYTE	TEMP	
MONTH	BYTE	TEMP	
DAY	BYTE	TEMP	
HOUR	BYTE	TEMP	
MINUTES	BYTE	TEMP	
SECONDS	BYTE	TEMP	
MSEC_WDAY	WORD	TEMP	
	END_STRUCT	TEMP	
	END_STRUCT	TEMP	

Code Section

Enter the following STL user program in the code section of OB20:

```
STL (OB20)                          Explanation
Network 1
  SET                               Set output Q 4.0 unconditionally
  =   Q 4.0
Network 2:
  L   QW 4                          Activate output word immediately
  T   PQW 4
Network 3:
  L   #STARTINFO.T_STMP.SECONDS     Read seconds from start event
  T   MW 140                        information
  L                                 Read milliseconds and day of week from
  #STARTINFO.T_STMP.MSEC_WDAY       start event information
  T   MW 142
  L   MD 140                        Eliminate day of week and
  SRD 4                             write milliseconds back (now BCD-coded
  T   MD 140                        in MW 142)
                                    Read starting time of time-delay
                                    interrupt (= call SFC32) from start
Network 4:                          event information
  L   #STARTINFO.SIGN
  T   MW 144                        Copy start event information to memory
                                    area (MB120 to MB139)
Network 5:
  CALL SFC 20
   SRCBLK  := STARTINFO
   RET_VAL := MW 106
   DSTBLK  := P#M 120.0 Byte 20
```

26.6.4.3 OB1

Declaration Section

In contrast to the default declaration section of OB1 the following temporary local variables are declared:

- Structure for the entire start event information (STARTINFO)
- Within the STARTINFO structure a structure for the time (T_STMP)

Variable Name	Data Type	Declaration	Comment
STARTINFO	STRUCT	TEMP	Start information for OB1
E_ID	WORD	TEMP	Event ID:
PC_NO	BYTE	TEMP	Priority class
OB_NO	BYTE	TEMP	OB number
D_ID 1	BYTE	TEMP	Data ID 1
D_ID 2	BYTE	TEMP	Data ID 2
CUR_CYC	INT	TEMP	Current cycle time
MIN_CYC	INT	TEMP	Minimum cycle time
MAX_CYC	INT	TEMP	Maximum cycle time
T_STMP	STRUCT	TEMP	Structure for time-of-day details (time stamp)
YEAR	BYTE	TEMP	
MONTH	BYTE	TEMP	
DAY	BYTE	TEMP	
HOUR	BYTE	TEMP	
MINUTES	BYTE	TEMP	
SECONDS	BYTE	TEMP	
MSEC_WDAY	WORD	TEMP	
	END_STRUCT	TEMP	
	END_STRUCT	TEMP	

Code Section

Enter the following STL user program in the code section of OB1:

```
STL (OB1)                                Explanation
Network 1
  L   #STARTINFO.T_STMP.SECONDS          Read seconds from start event
  T   MW 10                              information
  L   #STARTINFO.T_STMP.MSEC_WDAY        Read milliseconds and day of week
  T   MW 12                              from start event information
  L   MD 10                              Eliminate day of week and
  SRD 4                                  write milliseconds back (now BCD-
  T   MD 10                              coded in MW 12)
Network 2:                               Positive edge at input I 0.0?
  A   I 0.0
  FP  M 1.0
  =   M 1.1                              If so, start time-delay interrupt
Network 3:                               (starting time of time-delay
  A   M 1.1                              interrupt assigned to the parameter
  JNB m001                               SIGN)
  CALL SFC 32
   OB_NO  := 20
   DTME   := T#10S
   SIGN   := MW 12
   RET_VAL:= MW 100
m001: NOP   0                            Query status of time-delay interrupt
                                         (SFC QRY_DINT)
Network 4:
  CALL SFC 34
   OB_NO  := 20
   RET_VAL:= MW 102                      Positive edge at input I 0.1?
   STATUS := MW 4
Network 5:
  A   I 0.1
  FP  M 1.3
  =   M 1.4                              ...and time-delay interrupt is
                                         activated (bit 2 of time-delay
Network 6:                               interrupt STATUS)?
  A   M 1.4                              Then cancel time-delay interrupt
  A   M 5.2
  JNB m002
  CALL SFC 33
   OB_NO  := 20                          Reset output Q 4.0 with input I 0.2
   RET_VAL:= MW 104
m002: NOP   0
  A   I 0.2
  R   Q 4.0
```

26.6.4.4 Example of Masking and Unmasking Synchronous Errors

The following example of a user program illustrates how to mask and unmask synchronous errors. Using SFC36 "MSK_FLT" the following errors are masked in the programming error filter:

- Area length error when reading
- Area length error when writing

With a second call of SFC36 "MSK_FLT" an access area can also be masked:

- I/O access error when writing

With SFC38 "READ_ERR" the masked synchronous errors are queried. The "I/O access error when writing" is unmasked again with SFC37 "DMSK_FLT."

Code Section

Below you will find the OB1 in which the example of the user program was programmed in Statement List.

```
STL (Network 1)                          Explanation
  AN  M 255.0                            Non-retentive memory bit M 255.0
                                         (only in first run = 0)
  JNB m001
  CALL      SFC 36                       SFC36 MSK_FLT (mask synchronous
                                         errors)
   PRGFLT_SET_MASK   :=DW#16#C           Bit 2 = Bit 3 = 1 (BLFL and BLFS are
                                         masked)
   ACCFLT_SET_MASK   :=DW#16#0           All bits=0 (no access errors are
                                         masked)
                                         Return value
   RET_VAL           :=MW 100            Output current programming error
   PRGFLT_MASKED     :=MD 10             filter to MD10
   ACCFLT_MASKED     :=MD 14             Output current access error filter
                                         to MD14
m001: A     BR
  S   M 255.0                            Set M255.0 if masking successful
```

```
STL (Network 2)                          Explanation
  CALL      SFC 36                       SFC36 MSK_FLT (mask synchronous
                                         errors)
   PRGFLT_SET_MASK      :=DW#16#0        All bits=0 (no further programming
                                         errors masked)
   ACCFLT_SET_MASK      :=DW#16#8        Bit 3 = 1 (write access errors are
                                         masked)
                                         Return value
   RET_VAL        :=MW 102              Output current programming error
   PRGFLT_MASKED  :=MD 20               filter to MD20
                                         Output current access error filter
   ACCFLT_MASKED  :=MD 24               to MD24
```

```
STL (Network 3)                          Explanation
  AN  M 27.3                             Block end if write access error (bit
  BEC                                    3 in ACCFLT_MASKED) not masked
```

```
STL (Network 4)                          Explanation
  L   B#16#0
  T   PQB 16                             Write access (with value 0) to PQB
                                         16
```

```
STL (Network 5)                          Explanation
  CALL      SFC 38                       SFC38 READ_ERR (query synchronous
                                         errors)
   PRGFLT_QUERY   :=DW#16#0              All bits=0 (no programming errors
                                         queried)
   ACCFLT_QUERY   :=DW#16#8              Bit 3 = 1 (write access error
                                         queried)
                                         Return value
   RET_VAL        :=MW 104
   PRGFLT_CLR     :=MD 30                Output current programming error
                                         filter to MD30
   ACCFLT_CLR     :=MD 34                Output current access error filter
                                         to MD34
                                         No error occurred and write access
  A   BR                                 error detected

  A   M 37.3                             Invert RLO
  NOT                                    M 0.0=1 if PQB 16 present
  =   M 0.0
```

```
STL (Network 6)                          Explanation
  L   B#16#0
  T   PQB 17                             Write access (with value 0) to PQB
                                         17
```

```
STL (Network 7)                          Explanation
  CALL      SFC 38                       SFC38 READ_ERR (query synchronous
                                         errors)
   PRGFLT_QUERY   :=DW#16#0              All bits=0 (no programming errors
                                         queried)
   ACCFLT_QUERY   :=DW#16#8              Bit 3 = 1 (write access error
                                         queried)
                                         Return value
   RET_VAL        :=MW 104
   PRGFLT_CLR     :=MD 30                Output current programming error
                                         filter to MD30
   ACCFLT_CLR     :=MD 34                Output current access error filter
                                         to MD34
                                         No error occurred and write access
  A   BR                                 error detected

  A   M 37.3                             Invert RLO
  NOT                                    M 0.1=1 if PQB 17 present
  =   M 0.1
```

```
STL (Network 8)                          Explanation
  L   B#16#0
  T   PQB 18                             Write access (with value 0) to PQB
                                         18
```

```
STL (Network 9)                          Explanation
  CALL      SFC 38                       SFC38 READ_ERR (query synchronous
                                         errors)
   PRGFLT_QUERY   :=DW#16#0              All bits=0 (no programming errors
                                         queried)
   ACCFLT_QUERY   :=DW#16#8              Bit 3 = 1 (write access error
                                         queried)
                                         Return value
   RET_VAL        :=MW 104
   PRGFLT_CLR     :=MD 30                Output current programming error
                                         filter to MD30
                                         Output current access error filter
   ACCFLT_CLR     :=MD 34                to MD34
                                         No error occurred and write access
  A   BR                                 error detected

                                         Invert RLO
  A   M 37.3                             M 0.2=1 if PQB 18 present
  NOT
  =   M 0.2
```

```
STL (Network 10)                         Explanation
  L   B#16#0
  T   PQB 19                             Write access (with value 0) to PQB
                                         19
```

```
STL (Network 11)                         Explanation
  CALL      SFC 38                       SFC38 READ_ERR (query synchronous
                                         errors)
   PRGFLT_QUERY   :=DW#16#0              All bits=0 (no programming errors
                                         queried)
   ACCFLT_QUERY   :=DW#16#8              Bit 3 = 1 (write access error
                                         queried)
                                         Return value
   RET_VAL        :=MW 104
   PRGFLT_CLR     :=MD 30                Output current programming error
                                         filter to MD30
                                         Output current access error filter
   ACCFLT_CLR     :=MD 34                to MD34
                                         No error occurred and write access
  A   BR                                 error detected

                                         Invert RLO
  A   M 37.3                             M 0.3=1 if PQB 19 present
  NOT
  =   M 0.3
```

```
STL (Network 12)                        Explanation
  CALL      SFC 37                      SFC37 DMSK_FLT (unmask synchronous
                                        errors)
   PRGFLT_RESET_MASK    :=DW#16#0       All bits=0 (no further programming
                                        errors unmasked)
   ACCFLT_RESET_MASK    :=DW#16#8       Bit 3 = 1 (write access error
                                        unmasked)
                                        Return value
   RET_VAL        :=MW 102
   PRGFLT_MASKED  :=MD 20               Output current programming error
                                        filter to MD20
                                        Output current access error filter
   ACCFLT MASKED  :=MD 24               to MD24
```

```
STL (Network 13)                        Explanation
  A   M 27.3                            Block end if write access error (bit
  BEC                                   3 in ACCFLT_MASKED) not unmasked
```

```
STL (Network 14)                        Explanation
  A   M 0.0
  JNB m002
  L   IB 0                              Transfer IB0 to PQB 16 if present
  T   PQB 16
m002: NOP   0
```

```
STL (Network 15)                        Explanation
  A   M 0.1
  JNB m003
  L   IB 1                              Transfer IB1 to PQB 17 if present
  T   PQB 17
m003: NOP   0
```

```
STL (Network 16)                        Explanation
  A   M 0.2
  JNB m004
  L   IB 2                              Transfer IB2 to PQB 18 if present
  T   PQB 18
m004: NOP   0
```

```
STL (Network 17)                        Explanation
  A   M 0.3
  JNB m005
  L   IB 3                              Transfer IB3 to PQB 19 if present
  T   PQB 19
m005: NOP   0
```

26.6.4.5 Example of Disabling and Enabling Interrupts and Asynchronous Errors (SFC39 and SFC40)

In this example of a user program, a program section is assumed that cannot be interrupted by interrupts. For this program section, OB35 calls (time-of-day interrupt) are disabled using SFC 39 "DIS_IRT" and later enabled again using SFC 40 "EN_IRT".

SFC39 and SFC40 are called in OB1:

```
STL (OB1)                    Explanation
  A   M 0.0                  Program section that can be interrupted without
  S   M 90.1                 problems:
  A   M 0.1
  S   M 90.0
  :
  :                          Program section that must not be interrupted by
                             interrupts:
                             Disable and discard interrupts
  CALL      SFC 39           Mode 2: disable individual interrupt OBs
   MODE     :=B#16#2         Disable OB35
   OB_NO    :=35
   RET_VAL  :=MW 100
  :
  :
  L   PIW 100
  T   MW 200
  L   MW 90
  T   MW 92
  :
  :                          Enable interrupts
  CALL      SFC 40           Mode 2: enable individual interrupt OBs
   MODE     :=B#16#2         Enable OB35
   OB_NO    :=35
   RET_VAL  :=MW 102
                             Program section that can be interrupted without
                             problems:
  A   M 10.0
  S   M 190.1
  A   M 10.1
  S   M 190.0
  :
  :
```

26.6.4.6 Example of the Delayed Processing of Interrupts and Asynchronous Errors (SFC41 and SFC42)

In this example of a user program, a program section is assumed that cannot be interrupted by interrupts. For this program section, interrupts are delayed using SFC41 "DIS_AIRT" and later enabled again using SFC42 "EN_AIRT."

SFC41 and SFC42 are called in OB1:

```
STL (OB1)                    Explanation
  A   M 0.0                  Program section that can be interrupted
  S   M 90.1                 without problems:
  A   M 0.1
  S   M 90.0
  :
  :                          Program section that must not be interrupted
                             by interrupts:
                             Disable and delay interrupts
  CALL      SFC 41
   RET_VAL  :=MW 100
  L   PIW 100
  T   MW 200
  L   MW 90
  T   MW 92
  :
  :
  :                          Enable interrupts
  CALL      SFC 42
   RET_VAL  :=MW 102
  L   MW 100                 The number of set interrupt disables is in
                             the return value
  DEC 1
  L   MW 102                 The number of set interrupt disables is in
                             the return value
                             The number must have the same value after
  <>I                        the interrupt is enabled
                             as before the interrupt disable (here "0")
  JC  err

                             Program section that can be interrupted
                             without problems:
  A   M 10.0
  S   M 190.1
  A   M 10.1
  S   M 190.0
  :
  :
  BEU                        The number of set interrupt disables is
                             displayed
err:  L     MW 102
  T   QW 12
```

26.7 Accessing Process and I/O Data Areas

26.7.1 Accessing the Process Data Area

The CPU can access inputs and outputs of central and distributed digital input/output modules either indirectly using the process image tables or directly via the backplane/P bus.

The CPU accesses inputs and outputs of central and distributed analog input/output modules directly via the backplane/P bus. You can also enter the addresses of analog modules in the process image area.

Addressing Modules

You assign the addresses used in your program to the modules when you configure the modules with STEP 7, as follows:

- With central I/O modules: arrangement of the rack and assignment of the modules to slots in the configuration table.
- For stations with a distributed I/O (PROFIBUS DP or PROFINET IO): arrangement of the DP slaves or IO devices with the PROFIBUS address or device name and assignment of the modules to slots.

By configuring the modules, it is no longer necessary to set addresses on the individual modules using switches. As a result of the configuration, the programming device sends data to the CPU that allow the CPU to recognize the modules assigned to it.

Peripheral I/O Addressing

There is a separate address area for inputs and outputs. This means that the address of a peripheral area must not only include the byte or word access type but also the I identifier for inputs and Q identifier for outputs.

The following table shows the available peripheral address areas.

Address Area	Access via Units of Following Size	S7 Notation (IEC)
Peripheral (I/O) area: inputs	Peripheral input byte Peripheral input word Peripheral input double word	PIB PIW PID
Peripheral (I/O) area: outputs	Peripheral output byte Peripheral output word Peripheral output double word	PQB PQW PQD

To find out which address areas are possible on individual modules, refer to the following manuals:

- CPU 31xC and CPU 31x, Technical Data
- S7-400 Programmable Controllers, CPU Data

Module Start Address

The module start address is the lowest byte address of a module. It represents the start address of the user data area of the module and is used in many cases to represent the entire module.

The module start address is, for example, entered in hardware interrupts, diagnostic interrupts, insert/remove module interrupts, and power supply error interrupts in the start information of the corresponding organization block and is used to identify the module that initiated the interrupt.

26.7.2 Accessing the Peripheral Data Area

The peripheral data area can be divided into the following:

- User data and
- Diagnostic and parameter data.

Both areas have an input area (can only be read) and an output area (can only be written).

User Data

User data is addressed with the byte address (for digital signal modules) or the word address (for analog signal modules) of the input or output area. User data can be accessed with load and transfer commands, communication functions (operator interface access), or by transferring the process image. User data can be any of the following:

- Digital and analog input/output signals from signal modules
- Control and status information from function modules
- Information for point-to-point and bus connections from communication modules (only S7-300)

When transferring user data, a consistency of a maximum of 4 bytes can be achieved (with the exception of DP standard slaves, see Setting the Operating Behavior). If you use the "transfer double word" statement, four contiguous and unmodified (consistent) bytes are transferred. If you use four separate "transfer input byte" statements, a hardware interrupt OB could be inserted between the statements and transfer data to the same address so that the content of the original 4 bytes is changed before they were all transferred.

Diagnostic and Parameter Data

The diagnostic and parameter data of a module cannot be addressed individually but are always transferred in the form of complete data records. This means that consistent diagnostic and parameter data are always transferred.

The diagnostic and parameter data is accessed using the start address of the module and the data record number. Data records are divided into input and output data records. Input data records can only be read, output data records can only be written. You can access data records using system functions or communication functions (user interface). The following table shows the relationship between data records and diagnostic and parameter data.

Data	Description
Diagnostic data	If the modules are capable of diagnostics, you obtain the diagnostic data of the module by reading data records 0 and 1.
Parameter data	If the modules are configurable, you transfer the parameters to the module by writing data records 0 and 1.

Accessing Data Records

You can use the information in the data records of a module to reassign parameters to configurable modules and to read diagnostic information from modules with diagnostic capability.

The following table shows which system functions you can use to access data records.

SFC	Purpose
Assigning parameters to modules	
SFC55 WR_PARM	Transfers the modifiable parameters (data record 1) to the addressed signal module
SFC56 WR_DPARM	Transfers parameters from SDBs 100 to 129 to the addressed signal module
SFC57 PARM_MOD	Transfers parameters from SDBs 100 to 129 to the addressed signal module
SFC58 WR_REC	Transfers any data record to the addressed signal module
Reading out diagnostic information	
SFC59 RD_REC	Reads the diagnostic data

Note

If a DPV1 slave is configured using a GSD file (GSD as of Rev. 3) and the DP interface of the DP master is set to "**S7 compatible**", then data records must not be read from or written to the I/O modules in the user program with SFC 58/59 or SFB 53/52. The reason is that in this case the DP master addresses the incorrect slot (configured slot +3).

Remedy: Set the interface for the DP master to "DPV1".

Addressing S5 Modules

You can access S5 modules as follows:

- By connecting an S7-400 to SIMATIC S5 expansion racks using the interface module IM 463-2
- By plugging in certain S5 modules in an adapter casing in the central rack of the S7-400

How you address S5 modules with SIMATIC S7 is explained in the "S7-400 Programmable Controller, Hardware and Installation" Manual or the description supplied with the adapter casing.

26.8 Setting the Operating Behavior

26.8.1 Setting the Operating Behavior

This chapter explains how you can modify certain properties of S7-300 and S7-400 programmable controllers by setting system parameters or using system functions (SFCs).

You will find detailed information on the module parameters in the STEP 7 online help and in the following manuals:

- "S7-300 Programmable Controller, Hardware and Installation" Manual
- "S7-300 Programmable Controller, Module Specifications" Reference Manual
- "S7-400 Programmable Controller, Module Specifications" Reference Manual

You will find all you need to know about SFCs in the "System Software for S7-300 and S7-400, System and Standard Functions" Reference Manual.

Addressing DP Standard Slaves

If you want to exchange data longer than 4 bytes with DP standard slaves, you must use special SFCs for this data exchange.

CPUs that support the exchange of consistent data (> 4 bytes) by means of the I/O area do not need SFCs 14/15 (see Distributed Reading and Writing of Consistent Data).

SFC	**Purpose**
Assigning parameters to modules	
SFC15 DPWR_DAT	Transfers any data to the addressed signal module
Reading out diagnostic information	
SFC13 DPNRM_DG	Reads the diagnostic information (asynchronous read access)
SFC14 DPRD_DAT	Reads consistent data (length 3 or greater than 4 bytes)

When a DP diagnostic frame arrives, a diagnostic interrupt with 4 bytes of diagnostic data is signaled to the CPU. You can read out these 4 bytes using SFC13 DPNRM_DG.

26.8.2 Changing the Behavior and Properties of Modules

Default Settings

- When supplied, all the configurable modules of the S7 programmable controller have default settings suitable for standard applications. With these defaults, you can use the modules immediately without making any settings. The default values are explained in the module descriptions in the following manuals:
- "S7-300 Programmable Controller, Hardware and Installation" Manual
- "S7-300 Programmable Controller, Module Specifications" Reference Manual
- "S7-400Programmable Controller, Module Specifications" Reference Manual

Which Modules Can You Assign Parameters To?

You can, however, modify the behavior and the properties of the modules to adapt them to your requirements and the situation in your plant. Configurable modules are CPUs, FMs, CPs, and some of the analog input/output modules and digital input modules.

There are configurable modules with and without backup batteries.

Modules without backup batteries must be supplied with data again following any power down. The parameters of these modules are stored in the retentive memory area of the CPU (indirect parameter assignment by the CPU).

Setting and Loading Parameters

You set module parameters using STEP 7. When you save the parameters, STEP 7 creates the object "System Data Blocks" that is downloaded to the CPU with the user program and transferred to the modules when the CPU starts up.

Which Settings Can Be Made?

The module parameters are divided into parameter blocks. Which parameter blocks are available on which CPU is explained in the "S7-300 Programmable Controller, Hardware and Installation" Manual and the "S7-400 Programmable Controller, Module Specifications" Reference Manual.

Examples of parameter blocks:

- Startup behavior
- Cycle
- MPI
- Diagnostics
- Retentive data
- Clock memory
- Interrupt handling
- Onboard I/Os (only for the S7-300)
- Protection level
- Local data
- Real-time clock
- Asynchronous errors

Parameter Assignment with SFCs

In addition to assigning parameters with STEP 7, you can also include system functions in the S7 program to modify module parameters. The following table shows which SFCs transfer which module parameters.

SFC	Purpose
SFC55 WR_PARM	Transfers the modifiable parameters (data record 1) to the addressed signal module
SFC56 WR_DPARM	Transfers the parameters from the corresponding SDBs to the addressed signal module
SFC57 PARM_MOD	Transfers all parameters from the corresponding SDBs to the addressed signal module
SFC58 WR_REC	Transfers any data record to the addressed signal module

The system functions are described in detail in the "System Software for S7-300 and S7-400, System and Standard Functions" Reference Manual.

Which module parameters can be modified dynamically is explained in the following manuals:

- "S7-300 Programmable Controller, Hardware and Installation" Manual
- "S7-300 Programmable Controller, Module Specifications" Reference Manual
- "S7-400 Programmable Controller, Module Specifications" Reference Manual

26.8.3 Updating the Firmware (of the Operating System) in Modules and Submodules Offline

The following section describes how to transfer a new firmware version (new operating system version) to a module or a CPU by means of a memory card.

The update requires the following two steps:

1. Create an "update memory card" (transfer the update files to a memory card) with the programming device (PG) or PC with an external prommer.
2. Using the "update memory card", update the operating system on the CPU.

Requirements

- Memory card with sufficient storage capacity. For information on this, refer to the download pages at customer support. This is where you will also find the update files.
- Programming device (PG) or PC set up to program memory cards.

To transfer the update files to a memory card, proceed as follows:

1. Create a new directory with the Windows Explorer.
2. Transfer the desired update file to this directory and unzip it there. This directory will then contain the UPD file.
3. Insert the S7 memory card into the programming device (PG) or the prommer.
4. Delete the memory card (menu command: **File > S7 Memory Card > Delete** in the SIMATIC Manager).
5. Select the **PLC > Update Operating System** menu command in the SIMATIC Manager.
6. In the dialog box that is displayed, select the directory with the UPD files.
7. Double-click the UPD file.
   This action starts the programming process. When this process is ended, the message "The firmware update for the module was successfully transferred to the S7 memory card" is displayed.

Updating the Operating System:

1. Switch off the power supply (PS) unit for the CPU.
2. Insert the prepared memory card with the update into the CPU.
3. Switch the power for the CPU back on.
   The operating system is transferred from the S7 memory card to the internal FLASH EPROM. During this time, all LEDs on the CPU are lit up.
4. After about two minutes, the update is finished. To indicate that the update is finished, the STOP LED on the CPU flashes slowly (system request for memory reset)
5. Switch the power off at the power supply unit and, where appropriate, insert the S7 memory card that is intended for the operation.
6. Switch the power back on. The CPU executes an automatic memory reset. After that, the CPU is ready for operation.

26.8.4 Using the Clock Functions

All S7-300/S7-400 CPUs are equipped with a clock (real-time clock or software clock). The clock can be used in the programmable controller both as clock master or clock slave with external synchronization. The clock is required for Time-Of-Day interrupts and runtime meters.

Time Format

The clock always indicates the time (minimum resolution 1 s), date, and weekday. With some CPUs it is also possible to indicate milliseconds (refer to the "S7-300 Programmable Controller, Hardware and Installation" Manual and "S7-400 Programmable Controller, Module Specifications" Reference Manual).

Setting and Reading the Time

You set the time and date for the CPU clock by calling SFC0 SET_CLK in the user program or with a menu option on the programming device to start the clock. Using SFC1 READ_CLK or a menu option on the programming device, you can read the current date and time on the CPU.

Note

To prevent the time from being displayed differently on HMI systems, you should set **winter time** on the CPU.

Assigning Parameters for the Clock

If more than one module equipped with a clock exists in a network, you must set parameters using STEP 7 to specify which CPU functions as master and which as slave when the time is synchronized. When setting these parameters, you also decide whether the time is synchronized via the communication bus or via the multipoint interface and the intervals at which the time is automatically synchronized.

Synchronizing the Time

To make sure that the time is the same on all modules in the network, the slave clocks are synchronized by the system program at regular (selectable) intervals. You can transfer the date and time from the master clock to the slave clocks using system function SFC48 SFC_RTCB.

Using a Runtime Meter

A runtime meter counts the operating hours of connected equipment or the total runtime hours of the CPU.

In STOP mode, the runtime meter is stopped. Its count value is retained even after a memory reset. During a restart (warm restart), the runtime meter must be restarted by the user program; during a hot restart, it continues automatically if it had already been started.

You can set the runtime meter to an initial value using SFC2 SET_RTM. You can start or stop the runtime meter with SFC3 CTRL_RTM. You can read the current total operating hours and the state of the counter ("stopped" or "counting") with SFC4 READ_RTM.

A CPU can have up to eight run-time meters. Numbering starts at 0.

26.8.5 Using Clock Memory and Timers

Clock Memory

The clock memory is a memory byte that changes its binary state periodically at a pulse-pause ratio of 1:1. You select which memory byte is used on the CPU when you assign parameters for the clock memory using STEP 7.

Uses

You can use clock memory bytes in the user program, for example, to activate flashing lights or to trigger periodic activities (for example, measuring an actual value).

Possible Frequencies

Each bit of the clock memory byte is assigned a frequency. The following table shows the assignment:

Bit of the Clock Memory Byte	7	6	5	4	3	2	1	0
Period Duration (s)	2.0	1.6	1.0	0.8	0.5	0.4	0.2	0.1
Frequency (Hz)	0.5	0.625	1	1.25	2	2.5	5	10

Note

Clock memory bytes are not synchronous with the CPU cycle, in other words, in long cycles, the state of the clock memory byte may change several times.

Timers

Timers are a memory area of the system memory. You specify the function of a timer in the user program (for example, on-delay timer). The number of timers available depends on the CPU.

Note

- If you use more timers in your user program than the CPU permits, a synchronous error is signaled and OB121 started.
- On the S7-300 (with the exception of the CPU 318), timers can be started and updated simultaneously only in OB1 and OB100; in all other OBs timers can only be started.

Index

"

"Accessible Nodes" Window 377

*

*.awl file 162
*.sdf file 162

A

Absolute and Symbolic Addressing 171
Access Protection 139, 140
Access Rights 382, 383
Access Rights to Blocks and Source Files 220
Accessing the Peripheral Data Area 641
Accessing the Process Data Area 639
ACT_TINT 89, 619
Activating 183
  Display of Symbols in the Block 183
Activating the Display of Symbols in the Block 183
Actual Parameters 77
Adding Associated Values to Messages 339
Address Areas 542, 543
Address Assignments
  Checking 47
Address priority (symbolic/absolute) 175
Addresses
  Inserting in a Variable Table 419
  Rewiring 210
  Without Symbols 297
Addresses and Data Types Permitted in the Symbol Table 180
Addresses Without Symbols 295
Addressing 171, 643
  Absolute 171, 172
  area-crossing 576, 577
  area-internal 576
  DP Standard Slaves 643
  Memory Indirect 576
  Symbolic 171, 172, 174
Addressing Modules 639
Addressing S5 Modules 642
ANY 573, 581, 582, 583, 584, 585, 586
Archive 352, 353
Archiving
  Procedure 518
  Projects and libraries 516
  Requirements 517
  STEP 7 V.2.1 Projects with Global Data Communication 597
  Uses 517
ARRAY 564, 567, 568, 569, 570
Assigning and Editing Block-Related Messages 325
Assigning Data Types to Local Data of Logic Blocks 587
  Assigning 587
Assigning Message Numbers 322
Assigning Parameters
  Signal Modules with Hardware Interrupt Capability 94
Assigning Parameters to Technological Functions 257
Assigning Parameters to the PG/PC Interface 46
Assigning Symbolic Names 604
Assignment of Message Numbers 323
Assignment of system errors to error classes 367
Associated Value
  Adding to Messages 339
Asynchronous error
  OB81 475
Asynchronous Errors
  Delayed Processing 638
  Disabling and Enabling 637
  Using OBs to React to Errors 99
Asynchronous events 75
Attributes for Blocks and Parameters 213
Automation License Manager 37
Avoiding Errors when Calling Blocks 309

B

B Stack
  Data saved in the B Stack 550
  Nested Calls 550
Background OB
  Priority 97
  Programming 98
Background OB (OB90) 97
Background Organization Block (OB90) 97
Basic Information
  on Data Blocks 247
Basic Procedure
  Planning an Automation Project 51
  when Printing 514
Basic procedure for creating logic Blocks 219
Basic Time (see Module Time) 386
Basics 259, 311
  Messaging concept 311
  Programming in STL source files 259
Battery Backup 554

BCD 562
Binary Coded Decimal 562
Bit Messaging 311, 312
BLKMOV 541
BLOCK 574
  parameter type 573
Block - Downloaded
  Saving on Integrated EPROM 402
Block - general
  Checking consistency 303
  Overview 62
Block Calls 69, 70
Block Comment 231
Block Comments
  Entering 230
Block consistency 303
Block folder 114
Block folder object 114
Block Folder Properties 209
  Displaying Block Lengths 209
Block for Changing the Pointer 578
Block Lengths 209
  Displaying 209
Block properties 207, 208, 219, 305
Block Properties 264, 265
Block Stack 539, 550
Block Title 231
Block with message capability 332
Block with messaging capability 325
BLOCK_DB 573
BLOCK_FB 573
BLOCK_FC 573
BLOCK_SDB 573
Block-related messages
  Creating CPU-oriented 332
  Creating project-oriented 325
  Editing project-oriented 328
Blocks
  Access Rights 220
  Attributes 213
  Creating with S7-GRAPH 200
  Deleting on the Programmable Controller 411
  Entering in STL 229
  Reloading in the Programmable Controller 401
  Rewiring 210
  Saving 244
  Uploading from an S7 CPU 409
Blocks Folder 203
BOOL 556
  Area 556
Boxes
  Positioning 235, 240
  Removing
    Changing 240
Breakpoint Bar 443
Browser 128
Buttons 120
  Toolbar 120
Buttons in the Toolbar 120
BYTE 556
  Area 556

C

Call Hierarchy in the User Program 69
Calling the Help Functions 104
Calling the module information
  Overview of the options 457
Calling the Module Information from the Project View (Online) 454
Calling the Quick View 453
CAN_TINT 89, 619
Certificate of License 37, 39
CFC 202
CFC Programming Language 194
Change Log 139, 141
Changing Interfaces 243
Changing Operator Control and Monitoring Attributes with CFC 375
Changing the Behavior and Properties of Modules 644
Changing the Declaration Type
  changing 225
Changing the Operating Mode 384
Changing the Window Arrangement 129
CHAR 556
Checking 276
  Consistency in STL Source Files 276
Checking consistency 303
  Blocks 303
Checking Scan Cycle Times to Avoid Time Errors 467
Choosing a Messaging Method 313
Clock 647
  Parameter Assignment 647
  Synchronizing 647
Clock Functions 647
Clock Memory 648
Code section 219
Code Section 222
  Editing 228
  Search Function for Errors 234
  Structure 228
Coils
  Positioning 235, 236
Combination Box
  Definition 121
Comment Character 419
Comment Line 419
Comment Lines
  Inserting 423
Comments
  for Blocks 231
  for Networks 231

Communication Error (OB87) 491
Communication Error Organization Block 491
Communication load 75
Communication processes 74
Compatibility 163, 597
DP slaves 163, 164, 597
V2 projects and libraries 163
Compiling 277, 406
Objects 405
STL Source Files 277
Compiling and downloading 403
Complex Data Types 564, 567, 568, 571
Compressing 413
the Memory Contents of an S7 CPU 413
User Memory 412
Compressing the User Memory 412
Configurable Memory Objects in the Work Memory 554
Configurable Modules 644
Configuration data 371, 372
Configuration Data
Transferring 350, 376
Configuration Diagram
Creating 60
Configuring hardware 519
in the configuration table 519
Configuring in general 354
CPU messages 354
Configuring Messages for System Errors 355
Configuring Operator Control and Monitoring Attributes via the Symbol Table 374
Configuring Operator Control and Monitoring Attributes with Statement List
Ladder Logic
and Function Block Diagram 373
Configuring the Reporting of System Errors 355
Configuring Variables for operator control and monitoring 371
Connection Table 147
Connection Test (See Flashing Test) 377
Connection to the CPU
Establishing 429
Context-Sensitive Help 104
Continuous Function Chart 194, 202
Control at contact 522
Converting 597
Project with Global Data Communication 597
Converting Version 2 Projects 595
Copying/Moving Variable Tables 418
Correcting a Memory Bottleneck 412
Correcting the Interfaces in a Function 308
Function Block
or UDT 308
Counter 292
Assignment List 292
COUNTER 573, 574
Memory Area
Retentive 553
parameter type 573
Counters
Upper Limits for Entering 423
CPU 447
Operating Modes 525, 526
Resetting 411
Simulating 447
CPU 31xC 160, 161, 162
CPU Clocks with Time Zone Setting 386
CPU Hardware Fault (OB84) 488
CPU Hardware Fault Organization Block 488
CPU messages 351, 353, 354
and displaying diagnostic messages 351
Archive size 351
Configuring 354
Displaying 351
CPU Oriented 323
CPU parameter "Cycle load due to communication" 71
CPU Redundancy Error (OB72) 483
CREAT_DB 540
Creating 122, 272, 610
FB for the Motor 606, 607, 608, 609
FC for the Valves 611, 612
OB1 for the Sample Industrial Blending Process 613
Objects 122
User programs 219
Variable Table 416
Creating - project 145
General procedure 145
Creating a Configuration Diagram 60
Example of Industrial Blending Process 60
Creating a Data Block in Load Memory 160
Creating a program
General procedure 21
Creating a Sample FB for the Industrial Blending Process 606
Creating a Sample FC for the Industrial Blending Process 611
Creating an I/O Diagram for the Motors 56
Creating an I/O Diagram for the Valves 57
Creating an Input Diagram for the Motors 56
Creating an Input Diagram for the Valves 57
Creating an Object 122
Creating an Output Diagram for the Motors 56
Creating an Output Diagram for the Valves 57
Creating and Editing User-Defined Diagnostic Messages 331
Creating and Managing Objects 122
Creating and Opening a Variable Table 417
Creating Sequential Controls 200
with S7-GRAPH 200
Creating User Text Libraries 346
Cross-Reference List 289
CRST/WRST 529, 530, 531
CTRL_RTM 647
Cycle 64, 71, 72, 73, 74, 75
Cycle load due to communication 71

Cycle time 72, 73, 74, 75
Cyclic Interrupt
Rules 92
Starting 92
Cyclic Interrupt Organization Blocks (OB30 to OB38) 92
Cyclic Interrupts 92
Cyclic Program Execution 63

D

Data Block
Shared 85
Structure 85
Data block (DB) 62
Data Block (DB) 553
Instance Data Blocks 82
Retentive 553
Data Block Register 550
Data blocks
Data view 249
Declaration view 248
Data Blocks 247
Basic Information 247
Editing Data Values in the Data View 254
Resetting Data Values to their Initial Values 254
Saving 255
Data Blocks (DB)
Instance Data Blocks 79
Data Carrier 161
Data exchange
in different operating modes 537
Data Record
Accessing 642, 644
Reading 641, 642
Writing 641
Data storage 161
Data Type
DINT 557
DWORD 562
INT 557
S5TIME 563
WORD 562
Data Types 555, 584, 585
ARRAY 564
BOOL 556
BYTE 556
Complex 564
DATE_AND_TIME 564, 565
Description 556
Double Word (DWORD) 556
Elementary 556
FB
SFB 79, 564
REAL 558
STRING 564
STRUCT 564
UDT 564
User Defined 564
Word (WORD) 556
Data Values 254
Editing in the Data View of Data Blocks 254
Resetting to their Initial Values 254
Data view of data blocks 249
DATE_AND_TIME 564, 565, 566, 567
Daylight saving time 386
DB 85, 271, 284, 285
Deactivating
Time-of-Day Interrupt 88
Debugging 276
in STL Files 276
Declaration view of data blocks 248
Declaring Local Variables 613
OB for the Sample Industrial Blending Process 613
Declaring Parameters 611
FC for the Sample Industrial Blending Process 611
DeclaringLocal Data 587
Default Settings for the LAD/STL/FBD Program Editor 220
Defective
CPU Operating Mode 525
Defining 183
Symbols when Programming 183
Defining Logic Blocks 603
Delayed Processing of Interrupts and Asynchronous Errors 638
Example 638
Delaying
Start Events 100
Deleting
S7 Blocks on the Programmable Controller 411
STEP 7 Objects 122
Deleting Associated Values 343
Describing the Individual Functional Areas 54
Describing the Operator Console
Example of Industrial Blending Process 59
Describing the Required Operator Displays and Controls 59
Detectable errors 475
Diagnosing Hardware
Detailed Diagnostic View 456
Quick View 453
Diagnostic Buffer 551, 552
Contents 472, 551, 552
Definition 551
Displaying 552
Evaluating 551
Reading 468
Diagnostic Data on Modules 470
Diagnostic Event 472, 551
Diagnostic Functions 472
Diagnostic Interrupt (OB82) 486
Diagnostic Interrupt Organization Block 486, 488
Diagnostic Message 471

Diagnostic status
PROFIBUS 493, 494, 495
PROFINET 499
Diagnostic Status Data 470
Diagnostics 449, 450
Diagnostics Symbols in the Online View 451
Dialog Boxes 121
Differences Between Project-Oriented and CPU-Oriented Assignment of Message Numbers 323
Differences Between Saving and Downloading Blocks 394
DINT 556, 557
DIS_AIRT 100
DIS_IRT 100
Disabling Interrupts and Asynchronous Errors 637
Example 637
Display language 344
Displaying
Addresses Without Symbols 297
Block Information for LAD
FBD
and STL 295
Block Lengths 209
Data Structure of Data Blocks Referencing an (Instance DBs) 251
Deleted Blocks 291
Lists in Additional Working Windows 297
Maximum Local Data Requirement in the Tree Structure 290
Missing Symbols 297
Program Structure 297
Reference Data 296, 298
Shared or Local Symbols 174
Unused Addresses 297
Displaying Accessible Nodes 377
Displaying and Setting the Time and Date 385
Displaying hardware
Module information 449
Displaying Stored CPU Messages 354
Displaying the Change Log 141
Displaying the Operating Mode 384
Disruptions 449
Narrowing down 449
Distributed I/O 163
Distribution of the Memory Areas 539
Dividing a Process into Tasks and Areas
for Example of Industrial Blending Process 52
Dividing the Process into Tasks and Areas 52
DMSK_FLT 100
Documentation 513
Documentation of a project 21, 105, 107
Double Integer (32 Bit) 557
Double Word (DWORD) 556
Area 556
Download 403, 404
Download Methods Dependent on the Load Memory 397
Downloading 405, 406, 541
Objects 405, 406
Requirements 393, 403
User Program 540
User Programs 395
Without Project Management 401
Downloading via EPROM Memory Cards 402
DP slave 163, 164
with missing or bad GSD files 597
DP Standard Slaves 643
DP/PA Link (IM 157) 463
DPNRM_DG 643
DPRD_DAT 643
DPWR_DAT 643
Dummy module 168, 169
Dummy slave 597
DWORD 556, 562

E

Editing 183, 347
Data Values in the Data View of Data Blocks 254
S7 Source Files 272
the Symbol Table 183
Uploaded Blocks
if the User Program is Not on the PG/PC 410
if the User Program is on the PG/PC 410
User text libraries 347
Editing a Project 150
Editing Areas in Symbol Tables 191
Editing projects and libraries 163
Editing Symbol Tables 191
Editing symbols across multiple networks 520
Editing Uploaded Blocks in the PG/PC 409
Editor
Settings for STL 220
Elementary Data Types 556
Elements in Dialog Boxes 121
EN_AIRT 100
EN_IRT 100
Enabling Interrupts and Asynchronous Errors 637
Example 637
Engineering Tools 32
Entering 251
Block Comments and Network Comments 230
Data Structure of Data Blocks Referencing an FB (Instance DBs) 251
Data Structure of User-Defined Data Types (UDT) 252
Multiple Instance in the Variable Declaration Window 227
Shared Symbols in a Program 182
Single Shared Symbols in a Dialog Box 183
Entering and Displaying the Data Structure of Data Blocks Referencing an FB (Instance DBs) 251
Entering and Displaying the Structure of Data Blocks Referencing a UDT 253
Entering multiple shared symbols in the symbol table 184

Entering Symbols 184
Entering the Data Structure of Shared Data Blocks 250
EPROM 402, 553
  Saving dowonloaded block 402
EPROM Area 540
Erasing 411
  Load/Work Memory 411
Erasing the Load/Work Memory and Resetting the CPU 411
Error detection 475
  OB types
    OB81 477, 478, 479
  Program examples
    Substitute values 480
Error Detection
  Using Error OBs to React to Errors 99
Error Handling Organization Blocks (OB70 to OB87 / OB121 to OB122) 99
Error OB
  OB Types
    OB121 and OB122 99
    OB70 and OB72 99
    OB80 to OB87 99
  Using Error OBs to React to Events 99
error OBs
  as reaction to a detected error 475
Error OBs 99, 100, 363, 476
Error Search
  in Blocks 234
Establish
  Online Connections 377
Establishing
  Online Connection via the "Accessible Nodes" Window 377
  Online Connection via the Online Window of the Project 379
Establishing a Connection to the CPU 429
Establishing the Safety Requirements 58
Evaluating the Diagnostic Buffer 551
Evaluating the Output Parameter RET_VAL 474
Event 71
Example
  Entering a Contiguous Address Area 425
  Entering Addresses in Variable Tables 424
  for Disabling and Enabling Interrupts and Asynchronous Errors (SFC39 and SFC40) 637
  for Masking and Unmasking Synchronous Errors 633
  for the Delayed Processing of Interrupts and Asynchronous Errors (SFC41 and SFC42) 638
Example of Working with Address Locations 300
Examples 426
  Entering Modify and Force Values 426
Examples - data blocks 496, 497, 502, 503, 508
  DB 125 with a DP slave 496
  DB 126 with an IO system 100 and devices 502
  Diagnostic Status DB 508
  PROFIBUS DP DB 497
  PROFINET IO-DB 503
Examples - STL Source Files 278
  DBs 284
  FBs 282
  FCs 279
  OBs 278
  UDTs 285
  Variable Declarations 277
Examples - various
  Handling time-of-day interrupts 619
Exceeding the L Stack 548
Expanding DP slaves (created with previous versions of STEP 7) 163
Expected-actual 529
  Comparison 529
Export file 154, 155
Exporting
  Source Files 275
  Symbol Table 187
Extended Uses of the STEP 7 Standard Package 31

F

FB 79, 80, 81, 564
  Example für STL Source Files 282
FBD 197
  Displaying Block Information 295
  Rules 240
FBD Elements 240
  Representation 239
  Rules for Entering 240
FBD Layout 239
FC 77, 78
FC12 621
FCs in STL Source Files
  Example 280, 281
FEPROM 553
File Formats for Importing/Exporting a Symbol Table 188
Filtering Symbols 184
Finding Address Locations in the Program Quickly 299
Finding Nodes on the Subnet 377
Firmware update 646
Flash-File System 44
Flashing Test 378
Floating-Point Numbers 558, 559, 560
Flow
  of Diagnostic Information 468
Folder 203
  Blocks 203
for the CPU 324
for the project 324
FORCE LED Flashing 377
Force Values 426
  Examples of Entering 426

Forcing Variables 436
Introduction 436
Safety Measures 435
Formal parameters 319
Format
BLOCK 574
COUNTER 574
TIMER 574
Format of the Data Type DATE_AND_TIME 565
Format of the Data Type DINT (32-Bit Integers) 557
Format of the Data Type INT (16-Bit Integers) 557
Format of the Data Type REAL (Floating-Point Numbers) 558
Format of the Data Type S5TIME (Time Duration) 563
Format of the Data Types WORD and DWORD in Binary Coded Decimal Numbers 562
Format of the Parameter Type ANY 581
Format of the Parameter Type POINTER 574
Format of the Parameter Types BLOCK
COUNTER
TIMER 574
Format Table 271
DBs 271
Format Table of Function Blocks 269
Format Table of Functions 270
Format Table of Organization Blocks 268
Formats 268
Blocks in STL Source Files 268
Forwarding parameters
parameter types 573
Function
Correcting the Interface 308
Function (FC) 62, 611
Function Block
Correcting the Interface 308
Function Block (FB) 606
Function Block Diagram 197
Function Block Diagram Programming Language (FBD) 197
Function Block Diagram(FBD) 194
Function Blocks 269
Format Table 269
Function Blocks (FB) 79
Actual Parameters 79, 80, 81
Application 79
Functional Scope of Report System Errors 357
Functions
Format Table 270
Functions (FC) 77
Application 77

G

Gaps in the User Memory (RAM) 412
GD Communication 597
General Tips
on Entering Symbols 182
Generated Blocks (Report System Error) 365
Generated Error OBs (Reporting System Errors) 363
Generating
Reference Data 298
STL Source Files from Blocks 274
Generating and Displaying Reference Data 298
Generating Blocks for Reporting System Errors 361
Generating Foreign-Language Message Texts in Report System Error' 369
Global Data Communication 597
Global Symbols
Entering in a Program 182
Graphic output of diagnostic events 493
GSD file
DP slaves created with previous versions of STEP 7 163
Missing or bad GSD files 597
Guidelines
Handling License Keys 41
Guidelines for Handling License Keys 41

H

Handling 519
large projects 519
Handling Errors 473
Hardware diagnostics 449
Hardware Interrupt 94
Priority 94
Rules 94
Starting 94
Hardware Interrupt Organization Blocks (OB40 to OB47) 94
Hardware Interrupts 94
Header and footer lines 514
Help (Online)
Changing the Font Size 104
Topics 104
Hiding texts in selected languages 159
Hierarchical Structure of Libraries 216
HiGraph 195
HOLD
CPU Operating Mode 525
HOLD Mode 538
Hot restart 529, 530, 531, 532, 533, 534
Automatic 530, 531, 532
Canceling 529
Manual 529, 530, 531

How to Assign CPU-Oriented Message Numbers 332
How to Assign Project-Oriented Message Numbers 325
How to Configure PCS 7 Messages (CPU-Oriented) 335
How to Configure PCS 7 Messages (Project-Oriented) 329
How to Edit Block-Related Messages (CPU-Oriented) 335
Human Machine Interface 35

I

I Stack
  Description 550
I/O
  Address Areas 639
I/O Access Error (OB122) 492
I/O Access Error (PZF) during Update of the Process Image 544
I/O Data 641
I/O Redundancy Error (OB70) 482
Icons for objects in the SIMATIC Manager 105
ID Number
  Entering 44
Identifying Nodes Directly Connected to a Programming Device/PG 377
Illegal Logic Operations in Ladder 238
IM 157 (DP/PA Link) 463
Importing
  External source file 148
  Source Files 275
  Symbol Table 187
Importing error and help texts 511
IN (Variable Declaration) 587
In/out Parameters 587, 588
IN_OUT (Variable Declaration) 587
IN_OUT Parameters of a Function Block 594
Incompatibility 597
Incomplete and Non-Unique Symbols in the Symbol Table 181
Indirect Parameter Assignment 644
Industrial Blending Process 606, 611, 613
Information Functions 461
Information Functions in the Diagnostic View 456
Information Functions in the Quick View 453
Information on the Log File 156
Input Parameters 587
Inputs
  Assignment List 292
  Process Image 544
Insert/Remove Module Interrupt (OB83) 487
Insert/Remove Module Interrupt Organization Block 487
Inserting
  Addresses or Symbols in a Variable Table 419
  Block Templates in STL Source Files 273
  Comment Lines 423
  Contents of Other STL Source Files 273
  Modify Values 421
  Source Code from Existing Blocks in STL Source Files 273
Inserting a Contiguous Address Range in a Variable Table 421
Inserting Block Templates in STL Source Files 273
Inserting External Source Files 273
Inserting in general
  S7 program 148, 149
  Substitute values for error detection 480
Inserting Program Elements 221
Inserting Source Code from Existing Blocks in STL Source Files 273
Inserting Stations 147
Installation Errors 44
Installation Procedure 44
Installation Requirements 42
Installing
  STEP 7 42, 43
Installing STEP 7 42
Installing the Automation License Manager 40
Instance 82, 83, 84
Instance Data Block 553
  Retentive 553
Instance Data Blocks 82
  Creating Multiple Instances for an FB 79
  Time Stamps 307
Instance DB 82, 83, 84
Instruction List 224
Instructions from the Program Elements Table 221
INT 556, 557
Integer (16 Bit) 557
Interaction Between The Variable Detail View And The Instruction List 224
Interrupt Assignments
  Checking 46
Interrupt OBs 88
  Using 88
Interrupt Stack 539, 550
Interrupt-Driven Program Execution 63
Interruption time 534
Interrupts 637, 638
  Delayed Processing 638
  Disabling and Enabling 637
Introduction 555
Introduction to Data Types and Parameter Types 555
Introduction to Forcing Variables 436
Introduction to testing with the variable table 415

K

Key Combinations
for Access to Online Help 135
for Menu Commands 132
for Moving the Cursor 133
for Selecting Text 135
Key Combinations for Toggling between Windows 136
Keyboard control 131

L

L Stack 548
Assigning Memory to Local Variables 548
Overwriting 548
Storing Temporary Variables 79
LAD 196
Displaying Block Information 295
Ladder Elements
Representation 235
Ladder Layout 235
Ladder Logic 196
Guidelines 235
Ladder Logic (LAD) 194
Ladder Logic Programming Language (LAD) 196
Language Editors
Starting 194
Language for display 344
Language settings in Windows 144
Large projects 519
Libraries 149, 163
Archiving 516
Editing version 2 163
Hierarchical Structure 216
Rearranging 520
Working with 214
Library 108
Library object 108
License 37, 38, 39
License Key 37, 38, 39
License Keys 41
License Manager 37, 38
Linear Programming 63
List Box 121
Listing In/Outs 56
Listing Inputs 56
Outputs
and In/Outs 56
Listing Outputs 56
Lists of texts relevant to operator 344
Load Memory 395, 396, 539, 540
Load Memory and Work Memory 540
Load Memory and Work Memory in the CPU 395
Local Data Requirements 290
Local Data Stack 539, 548, 549
Local time 386
Logic blocks
in the incremental editor 219
Structure 219
Logic Blocks 603
Saving 244
Time Stamps 306

M

Maintenance demand 449
Maintenance Demanded 452
Maintenance information 450
Maintenance required 450
Maintenance Required 452
Make (see checking block consistency) 303
Make (see compiling and downloading Objects) 405
Make (see Compiling and Downloading Objects) 403
Managing
Objects 122, 123, 124, 125, 126, 127
Managing Multilingual Texts 151
Managing user texts whose language font is not installed 157
Masking
Start Events 99
Masking Synchronous Errors 633
Example 633
Maximum cycle time 71
Memory 554
Configurable 554
Memory Area 553
Memory Area
Retentive 553
Memory Areas 539
Address Areas 542
Load Memory 539
Retentive 553, 554
Special Features with S7-300 540
Special Features with S7-400 540
System Memory 539
Work Memory 539
Memory bit
Assignment List 292
Memory Card 541
Assigning Parameters 45
Memory card file 161
Memory Reset 528
Message
Example 316
Parts 316
Symbol-related CPU-oriented 337
Symbol-related project-oriented 330
Message blocks 319
Message Blocks
Overview 317

Message Configuration
SIMATIC Components 315
Transferring Data to WinCC 350
Message number assignment 324
Message Numbering 311
Message Numbers 323
Message Type 320, 321
Message Type and Messages 320
Messaging
Basics 311
Messaging Method 314
Messaging Numbers 322
Assigning 322
Micro Memory Card (MMC) 161, 162
Micro Memory Cards (MMC) 160
Minimum cycle time 71
MMC 160, 161, 162
Mnemonics
Setting 242
Mode Transitions 526, 527
Modify Values 426
Examples of Entering 426
Inserting 421
Modifying
Basic Procedure 416
Variables 433, 434
Modifying Variables
Introduction 432
Modifying variables with the program editor 522
Module 447, 519
Simulating 447
Module Exists/Type Monitoring
Startup OBs 95
Module icon for unknown modules 168
Module information 450, 463
Calling 457
Displaying 450
Displaying DP slaves downstream from Y link 463
Displaying for PA field devices 463
Module Information 455
Calling 455
Updating 460
Module Information Functions 458
Module Parameters 644, 645
Transferring with SFCs 644
Transferring with STEP 7 644
Module Start Address 639
Module Status 461
Information Functions 458
Module Time 386, 387
Modules
Parameter Assignment 644, 645
Replacing 519
Monitoring
Basic Procedure 416
Variables 430, 431
Monitoring Times 96
Motors 56
Creating an I/O Diagram 56
Moving
Object 122, 123, 124, 125, 127
MPI Card for PG/PC 46
MPI FW Update 388
MPI Interface 42, 43
MPI-ISA Card (Auto) 46
MSK_FLT 100
Multiple Instance 79
entering in the Variable Declaration Window 227
Multiple instances
Use 226
Multiple Instances 84
Rules 227
Multiprojects with Access Protection 139

N

Naming conventions 371
for Configuration data 371
Narrowing down disruptions 449
Nested Calls of Logic Blocks 550
Effects on the B Stack and L Stack 550
Nesting 550
Nesting Depth 69
Network Comment 231
Network Comments
Entering 230
Network templates
Working with 233
Network Title 231
Networks 197
Ladder Logic 235
Non-retentive 207
Non-Volatile RAM 553
Notes on STEP 7 V.2.1 Projects with GD Communication 597
Number Notation 555
NVRAM 553

O

OB 63, 64, 65, 66, 67
OB 1 cycle time 71
OB1 613, 614, 631
OB1 and OB80 625
OB10 623, 624
OB100 529
OB101 529, 536
OB102 529
OB121 491
OB122 492
OB20 629

OB70 482
OB72 483
OB80 484
OB81 485
OB82 486
OB83 487
OB84 488
OB85 489, 546, 547
OB86 490
OB87 491
Object 404, 405, 406
Compiling and downloading 405
Cutting
Copying
Pasting 124
Deleting 127
Moving 126
Opening 123
Properties 123, 124, 125
Renaming 125
Selecting 128
Object hierarchy 105
Object Hierarchy
Building 123
Objects
Managing 122
Objects in the SIMATIC Manager 105, 107
Object hierarchy 105
Project 107
OBs in STL Source Files
Example 279
Offline update 646
of the firmware of modules and submodules 646
of the operating system of modules and submodules 646
Offset factor 386
Online Connection
Establishing via the "Accessible Nodes" Window 377
Establishing via the Online Window of the Project 379
Online Connections
Establish 377
Online Help
Calling 104
Topics 104
Online Updating of Firmware in Modules and Submodules 388
Online View
Diagnostics Symbols 451, 452
Opening
Symbol table 184
Variable Table 416
Operating Mode 526, 527
Displaying and Changing 384
HOLD 525, 526, 527
RUN 525, 526, 527
STARTUP 525, 526
STOP 528
Operating Mode STOP 466
Stack Contents 466
Operating modes
STARTUP 529
Operating Modes
Priority 527
Operating Modes and Mode Transitions 525
Operating philosophy 119
Operating system 71, 72, 75, 646
Operating System
Tasks 61
Operator Console 59
Operator control and monitoring attributes 371
Operator Control and Monitoring Attributes
CFC 375
Configuring with STL
LAD
FBD 373
Configuring with Symbol Table 374
Operator Displays and Controls
Example of Industrial Blending Process 59
Optimizing the Source for Translation 158
Optimizing the Translation Process 159
Optional Package 447
Options for modifiying the message number assignment of a project 324
Organization Block (OB) 97
Background OB (OB90) 63
Organization blocks 62
Cyclic program execution (OB 1) 71
Error detection
OB122
Substitute values 480
Organization Blocks 268
Creating an OB for the Sample Industrial Blending Process 613
Definition 63
Format Table 268
Priority Classes 63, 64, 65, 66
Reacting to Errors 99
Organization Blocks and Program Structure 63
Organization Blocks for Interrupt-Driven Program Processing 88
OUT (Variable Declaration) 587
Output Parameter 474
Evaluating RET_VAL 474
Output Parameters 587
Outputs
Assignment List 292
Process Image 544
Overview 287, 317
Message Blocks 317
of the available reference data 287
Overview of report system error 355
Overview of STEP 7 21
Overview of the available reference Data 287
Overview of the diagnostic status 493

Overview of the Standard Libraries 216
Overwrite Mode 234
Overwriting the L Stack 548

P

PA field devices 463
Page format 515
Parameter Assignment 647
  Clock 647
  Indirect 644
  with SFCs 645
  with STEP 7 645
Parameter type
  ANY 573
  BLOCK_DB 573
  BLOCK_FB 573
  BLOCK_FC 573
  BLOCK_SDB 573
  COUNTER 573
  POINTER 573
  TIMER 573
Parameter Type POINTER
  Using 576
Parameter types 573
Parameter Types 584
Parameters 213
  Attributes 213
Parent/Child Structure 290
PARM_MOD 642, 645
Part Process Image (Process Image Partition) 544
  System Update 546
  Updating with SFCs 544
Parts of a Message 316
Password 382, 383
Password Protection for Access to Programmable Controllers 382
PC Station 166, 167
Peripheral Data 641
Permitted Data Types when Transferring Parameters 589
PG/PC Interface 46
  Parameter Assignment 46
Phase Offset 92
Planning an Automation Project
  Basic Procedure 51
  Creating a Configuration Diagram 60
  Creating an I/O Diagram for the Motors 56
  Creating an I/O Diagram for the Valves 57
  Describing the Individual Function Areas 54
  Describing the Required Operator Displays and Controls 59
  Dividing the Process into Tasks and Areas 52
  Establishing the Safety Requirements 58
  Listing Inputs
    Outputs
      and In/Outs 56
Pointer 576, 577, 578, 579, 580
POINTER 573, 574, 575
  parameter type 573
Pointer format 573
Positioning
  Boxes 240, 241
Power down 529
Power Flow 238
Power Supply Error (OB81) 485
Power Supply Error Organization Block 485
Preventing Personal Injury 436
Preventing Property Damage 436
Previous versions of STEP 7 165
  compatibility (direct data exchange) 165
  compatibility (online connection via PROFIBUS DP interface) 165
  direct data exchange 165
  distributed I/O 165
  downward compatibility 165
  editing current configurations with previous versions of STEP 7 165
  online connection via DP interface 165
  PROFIBUS DP 165
Printer
  Functions 514
  Setting up 514
Printing
  Blocks 513
  Configuration Table 513
  Diagnostic Buffer Content 513
  Global Data Table 513
  Reference Data 513
  Symbol Table 513
  Variable Table 513
Printing Project Documentation 513
Priority
  Background OB 97
  Hardware Interrupt 94
  Time-Delay Interrupt 91
  Time-of-Day Interrupt 88
Priority (symbolic/absolute address) 175
Procedure 518
  for Archiving/Retrieving 518
  for Entering Statements 229
  for identifying a STOP cause 465
Process
  Dividing into Tasks 52
Process control dialog
  see How to Configure of PCS 7 Messages (CPU-Oriented) 335
Process Control Dialog
  see How to Configure PCS 7 Messages (Project-Oriented) 329

Process image 71
Updating 72, 74
Process Image 544
Clearing 96
Inputs/Outputs 544
Process mode 74, 76
Process monitoring 371
Process Monitoring 416
PROFIBUS DP 164, 389
PROFIBUS PA 463
PROFINET Nodes 378
Program Editor 217
Program examples
Inserting substitute values 480
Reacting to battery errors 475
Substitute values 480
Program Execution
Cyclic 63, 65, 66, 67
Interrupt-Driven 63
Program Measures for Handling Errors 473
Program Processing 88
Interrupt-Driven 88
Program Sequence Error (OB85) 489
Program Sequence Error Organization Block 489
Program Status
Setting the Display 446
Testing with 439
Program Status Display 440
Program Status of Data Blocks 445
Program Structure 290, 291
Displaying 297
Programmable Controller
Reloading Blocks 401
Programmable module object folder 110
Programming 21, 23, 24
Background OB 97
Transferring Parameters 79
Using Data Blocks 79
with STEP 7 22, 23
Programming Error (OB121) 491
Programming Error Organization Block 491
Programming Language
S7-GRAPH (Sequential Control) 200
Selecting 194
Programming Languages 25, 28
Function Block Diagram (FBD) 197
Ladder Logic (LAD) 196
S7 CFC 202
S7 HiGraph 201
S7 SCL 199
STL 198
Programs in a CPU 61
Project 107, 150
Checking software used 150
Copying 150
Creating 145, 146
Deleting 150
Opening 150
Project Documentation
Printing 513
Project Language 142, 143
Project Structure 138
Project View 138
Project Window 137
Project-Oriented 323
Projects 163, 516
Archiving 516
Editing a version 2 project 163
Order for editing 145
Rearranging 520
Renaming 122
Projects with a large number of networked stations 519
Projects with Access Protection 139
PZF (I/O Access Error) 544

Q

QRY_TINT 88, 619
Querying
Time-of-Day Interrupt 88
Quick View of the Diagnostic Information 453

R

Rack Failure (OB86) 490
Rack Failure Organization Block 490
RAM 539, 553
RAM Area 540, 554
RDSYSST 468, 469, 552
READ_CLK 647
READ_RTM 647
Reading and Adjusting the TOD and the TOD Status 386
Reading from a Data Block in Load Memory 160
REAL 556, 558
Rearranging projects and libraries 520
Redundant Mode 390
Reference data 287
Application 287
Reference Data
Displaying 296, 298
Generating 298
Reloading Blocks in the Programmable Controller 401
Remaining cycle 530, 533, 534
Removing Access Protection 139
Renaming 597
Projects 122, 125
STEP 7 V.2.1 Projects with Global Data Communication 597
Replacing 519
Modules 519

Report system error 361
  Generating blocks 361
  settings 361
Report System Error
  Generated Blocks 365
Report system errors
  Generating 361
Report System Errors 357, 365
  Supported Components 357
Reporting System Errors 355, 365
Representation 168
  FBD Elements 239
  Ladder Elements 235
  STL 242
  Unknown modules 168
Requirements 393
  Archiving 517
  for downloading 393, 403, 404
Resetting 254
  Data Values to their Initial Values 254
  the CPU 411
Restoring
  Window Arrangement 130
Retentive Memory Areas on S7-300 CPUs 553
Retentive Memory Areas on S7-400 CPUs 554
Retentivity
  after power down 529
Retrieving
  Procedure 518
Rewiring 210
  Addresses 210
  Blocks 210
Ring Buffer (Diagnostic Buffer) 551
RPL_VAL 480
Rules 187
  Cyclic Interrupt 92
  FBD 240
  for Declaring Multiple Instances 227
  for Exporting the Symbol Table 187
  for Importing the Symbol Table 187
  Hardware Interrupt 94
  Ladder Logic 235
  Statement List 242
  Time-Delay Interrupt 91
  Time-of Day-Interrupt 88
Rules for Entering FBD Elements 240
Rules for Entering Ladder Logic Elements 235
Rules for Entering STL Statements 242
Rules in STL Source Files 260
  Order of Blocks 262
  Programming 260
  Setting Block Properties 263
  Setting System Attributes 262
  Variable Declaration 261
RUN
  CPU activities 529
  CPU Operating Mode 525
RUN Mode 537
Run-Time Meter 647
Run-Time Software 34

S

S5 TIME 556
S5TIME 563
S7 CFC Programming Language 202
S7 export file 162
S7 HiGraph 201
S7 HiGraph Programming Language (State Graph) 201
S7 program 112
S7 program folder 112
S7 Program without a Station or CPU 118
S7 programs
  Inserting 149
S7 Routing 388
S7 SCL Programming Language 199
S7 Source Files 272
  Editing 272
S7-GRAPH 194, 200
Safety Measures When Forcing Variables 435
Safety Notes 548
  Exceeding the L Stack 548
  Overwriting the L Stack 548
Safety Requirements 58
  Example of an Industrial Blending Process 58
Sample Program 603, 604, 609, 611, 613, 614, 633, 637, 638
Sample Program for an Industrial Blending Process 600
Sample programs 598
Sample Programs 606
  FB for the Industrial Blending Process 606
  FC for an Industrial Blending Process 611
  Industrial Blending Process 600
    Creating a Configuration Diagram 60
    Describing the Individual Functional Tasks and Areas 54
    Describing the Individual Tasks and Areas
      Creating an I/O Diagram 56
    Describing the Operator Displays and Controls 59
    Describing the Safety Requirements 58
    Dividing the Process into Tasks and Areas 52
  OB for the Sample Industrial Blending Process 613
Sample projects 598, 599
save
  to Micro Memory Card 162
Save 162

Saving
Blocks 244
Data Blocks 255
Downloaded Blocks on Integrated EPROM 402
Logic Blocks 244
STL Source Files 276
Uses 517
Variable Table 418
Window Arrangement 130
SCAN message 330, 337
SCL 194, 199
Scope of the Module Type-Dependent Information 461
sdf 162
Search Function for Errors in the Code Section 234
Selecting
Editing Method 193
Programming Language 194
Selecting Objects in a Browser 128
Session Memory 129
SET_CLK 90, 647
SET_CLKS 386
SET_RTM 647
SET_TINT 89, 619
Setting
Operating Behavior 643
Time and Date 385
Virtual work memory 523
Setting the address priority (symbolic/absolute) 175
Setting the Display for Program Status 446
Setting The Layout of Source Code Text 272
Setting The Layout of Source Code Text Code 272
Setting the Mnemonics 242
Setting the PG/PC Interface 46
Setting the Windows language 144
Setting trigger points 430
Setting up Access Protection 139
Settings 361
report system errors 361
Settings for Function Block Diagram Programming 239
Settings for Ladder Logic Programming 235
Settings for Statement List Programming 242
Setup
Entering ID Number 44
Flash-File System 44
Memory Card Parameters 45
SFB 86, 564
SFB 20 STOP 71
SFB33 317
SFB34 317
SFB35 317
SFB36 317
SFB37 318
SFC 86
Using 544
SFC 13 DPNRM_DG 643
SFC 14 DPRD_DAT 643
SFC 15 DPWR_DAT 643
SFC 26 UPDAT_PI 71
SFC 27 UPDAT_PO 71
SFC 28 SET_TINT 619
SFC 29 CAN_TINT 619
SFC 30 ACT_TINT 619
SFC 31 QRY_TINT 619
SFC 44 RPL_VAL 480
SFC 46 STP 71
SFC 52 WR_USMSG 471
SFC 55 WR_PARM 644
SFC 56 WR_DPARM 644
SFC 57 PARM_MOD 644
SFC0 SET_CLK 647
SFC1 READ_CLK 647
SFC100 'SET_CLKS' 386
SFC17/18 317
SFC2 SET_RTM 647
SFC20 BLKMOV 540
SFC22 CREAT_DB 540
SFC26 UPDAT_PI 544
SFC27 UPDAT_PO 544
SFC28 SET_TINT 88
SFC29 CAN_TINT 88
SFC3 CTRL_RTM 647
SFC30 ACT_TINT 88
SFC31 QRY_TINT 88
SFC32 SRT_DINT 91
SFC36 MSK_FLT 99
Example in LAD 633
Example in STL 633
SFC37 DMSK_FLT 99
Example in LAD 633
Example in STL 633
SFC38 READ_ERR
Example in LAD 633
Example in STL 633
SFC39 DIS_IRT 99
Example in STL 637
SFC4 READ_RTM 647
SFC40 EN_IRT 99
Example in STL 637
SFC41 DIS_AIRT 99
Example in STL 638
SFC42 EN_AIRT 99
Example in STL 638
SFC48 SNC_RTCB 647
SFC51 RDSYSST 468, 469, 551
SFC55 WR_PARM 641
SFC56 WR_DPARM 641
SFC57 PARM_MOD 641
SFC82 160
SFC83 160
SFC84 160
Shared and Local Symbols 173
Shared Data Blocks 250

Entering the Data Structure 250
Time Stamps 307
Shared Data Blocks (DB) 85
Short Circuit
Ladder Logic
Illegal Logic Operations 238
Signal Module 447
Simulating 447
Signal Modules with Hardware Interrupt Capability
Assigning Parameters 94
SIMATIC Components 315
SIMATIC Manager 101
Displaying Block Lengths 209
SIMATIC PC - Appending Configurations of Previous Versions 166
SIMATIC PC Station 166
Simulating a CPU or Signal Module 447
Simulation Program 447
SlotPLC 161
SNC_RTCB 647
Software packages 150
Software PLC 161
Sorting in the Cross Reference List 289
Sorting symbols 184
Source Code 272
Source file Folder 117
Source file folder object 117
Source files
External 149
Source Files 275
Access Rights 220
Exporting 275
Generating STL Source Files from Blocks 274
Importing 275
Inserting External Source Files 273
Saving STL Source Files 276
Source Files in S7-GRAPH 200
Special Note on Printing the Object Tree 515
Specifying a trigger 430, 433
to modify variables 433
to monitor variables 430
Specifying the display
for CPU messages and user-defined diagnostics messages 351
SRT_DINT 91
SSL 469
Stack Contents in STOP Mode 466
Standard Libraries 216
Overview 216
Standard library 148
Start Address 640
Start Events
Delaying 99
Masking 100
Startup OBs 95
Starting
Cyclic Interrupt 92, 93
Hardware Interrupt 94
Time-Delay Interrupt 91
Time-of-Day Interrupt 89
Starting STEP 7 Installation 44
Starting STEP 7 with Default Start Parameters 102
STARTUP 529, 533, 534, 535, 536
Canceling 529
CPU activities 529
CPU Operating Mode 525
Startup OBs 95, 529
Module Exists/Type Monitoring 96
OB 100/OB 101/OB 1002 529
Start Events 95
Startup Organization Blocks (OB100 / OB101 / OB102) 95
Startup Program 95
STAT (Variable Declaration) 587
State Graph 201
Statement List 198, 242
Representation 242
Rules 242
Statement List (STL) 194
Statement List Programming Language (STL) 198
Statements
Entering
Procedure 229
Station 109
Inserting 147
Uploading 408
Station object 109
Status Bar
Example 120
STEP 7 25, 26, 28
Error OBs
Reacting to Errors 99
Errors During Installation 44
Installation 42, 43
Removing 48
Starting the Software 101
Uninstalling 48
User Interface 120
What's new in STEP 7
Version 5.6 30
STEP 7
Programming Languages 25
STEP 7
Standard Software 25
STL 198
Displaying Block Information 295
Entering Blocks 229
STL Editor
Settings 220

STL Examples of
FBs 282
FCs 279
OBs 278
UDTs 285
Variable Declaration 278
STL Examples of
DBs 284
STL Files
Debugging 276
STL source file
Basics of programming 259
STL Source File
Creating 272
STL Source Files
Checking Consistency 276
Compiling 277
Generating from Blocks 274
Inserting Block Templates 273
Inserting External Source Files
External Source Files 274
Inserting Source Code from Existing Blocks 273
Inserting the Contents of Other STL Source Files 273
Rules 260, 261, 262, 263, 268
Saving 276
Structure of Blocks 266
Structure of Data Blocks 267
STL Structures of Blocks
Logic Blocks 266
User-Defined Data Types 267
STOP 72, 73, 465
CPU Operating Mode 525
Identifying the cause 465
STOP Mode 528
Storing Mico Memory Card (MMC) Project data 162
STP 72
STRING 564, 567
STRUCT 564, 567, 571
Structure
Cross-Reference List 289
Load Memory 540, 541
of Blocks in STL Source Files 266
of Data Blocks in STL Source Files 267
Of Logic Blocks in STL Source Files 266
of the Code Section 228
of the User Program "Time-of-Day Interrupts" 619
User-Defined Data Types in STL Source Files 267
Variable Declaration Window 225
Structure and Components of the Symbol Table 178
Structure of the export file 154
Structure of the Program Editor Window 217
Structure of the User Program "Time-Delay Interrupts" 627
Structured Control Language 199
Structured Data Types 564
Structured program
Advantages 62
Structured Programming 68
Substitute value for error detection 480
Summer/winter time 386
Supported Components and Functional Scope 357
Symbol table
Opening 184
Symbol Table 174
File Formats for Importing/Exporting 188
for Shared Symbols 178
Permitted Addresses 180
Permitted Data Types 180
Structure and Components 178
Symbolic Addressing 174
Sample Program 604
Symbolic Names 604
Assigning 604
Symbol-related messages (project-oriented)
Assigning and editing 330
Assignment to symbol table 330
Permitted signals 330
Symbol-related messages CPU-oriented
Assigning and editing 337
Assignment to symbol table 337
Permitted signals 337
Symbols 171, 172, 174, 185
Defining when Programming 183
Entering 184
Filtering 184
for the Program Structure 290, 291
Inserting in a Variable Table 419
Local 173
Shared 173
Sorting 184
Unused 294
Upper and Lower Case 185
Synchronizing 647
Clock 647
Synchronous Errors 633
Masking and Unmasking 633
Using OBs to React to Errors 99
Syntax for Blocks in STL Source Files 268
System architecture
Cycle 71
System attributes
for message configuration 319
System Attributes
for Configuration of PCS 7 Messages (CPU-Oriented) 335
for configuring PCS 7 Messages (Project-Oriented) 329
for Parameters 222
in the Symbol Table 178, 179
System Data 470
System Diagnostics 471

System Error 472
System function block SFB 62
System Function Blocks 86
System Function Blocks (SFB) and System Functions (SFC) 86
System function SFC 62
System Functions 86
System Memory 539, 542
System Parameters 643
System Status List 469, 470
  Contents 469
  Reading 469
System Text Libraries 347

T

Tabs in Dialog Boxes 121
Tasks
  Example of Industrial Blending Process 52
Tasks and Areas
  Example of Industrial Blending Process 54
TEMP (Variable Declaration) 587
Temporary Variables 587, 588
Testing 415, 521
  Using Program Status 439
  using the Simulation Program (Optional Package) 447
  with the variable table 415, 521
Testing in Single-Step Mode 442, 443
Text Libraries 348
  Translating 348
Text Library 342
  Integrating Texts into Messages 342
Text lists
  See lists of texts relevant to operator 344
Texts relevant to operator 344
The STEP 7 Standard Package 26
Time 556
  Reading 647
  Setting 647
Time and Date 385
  Setting 385
Time Error (OB80) 484
Time Error Organization Block 484
Time Format 647
TIME OF DAY 556
Time stamp 386
  as block property 305
Time stamp conflicts 305
Time Stamps 307
  in Instance Data Blocks 307
  in Logic Blocks 306
  in Shared Data Blocks 307
Time stamps in UDTs and Data Blocks Derived from UDTs 308
Time Zones 386
Time-Delay Interrupt
  Priority 91
  Rules 91
  Starting 91
Time-Delay Interrupt Organization Blocks (OB20 to OB23) 91
Time-Delay Interrupts 91
Time-of-Day Interrupt
  Changing the Time 88
  Deactivating 89
  Priority 89
  Querying 89
  Rules 89
  Starting 89
Time-of-day interrupt - example
  Handling 619
Time-of-Day Interrupt Organization Blocks (OB10 to OB17) 88
Time-of-Day Interrupts 88
  Structure 619
TIMER 573, 574
  parameter type 573
Timers
  Upper Limits for Entering 422
Timers (T) 648
  Memory Area
    Retentive 553
Times 292
  Assignment List 292
Tips and tricks 519, 521
Tips and Tricks 520, 523
Title Bar 120
Titles
  for Blocks 231
  for Networks 231
TOD Interrupt 386
TOD Status 387
TOD Synchronization 387
Toggling between Windows 136
Toolbar
  Buttons 120
Transferring Configuration Data to the Operator Interface Programmable Controller 376
Transferring Configuration Data to the Programmable Controller 350
Transferring Parameters
  Saving the Transferred Values 79
Transferring to IN_OUT Parameters of a Function Block 594
Translating and editing user texts 344
Translating and Editing User Texts 344
Translation - texts
  Of texts relevant for operator 344
Tree Structure 290
Trigger conditions 430

Troubleshooting 449
Hardware 449
Type file 163
Types of Interrupt 63
Types of Licenses 39
Enterprise License 37
Floating License 39
Rental License 39
Trial License 39
Upgrade License 37
Types of Multilingual Texts 153

U

UDT 204, 205, 206, 564
UDT - User-defined Data Types in STL Source Files
Example 285
Uninstalling STEP 7 48
Uninstalling the User Authorization 41
Unknown modules 168
Unmasking
Start Events 99
Unmasking Synchronous Errors 633
Example 633
Unused Addresses
Displaying 297
Unused Symbols 294
UPDAT_PI 74, 544
UPDAT_PO 74, 544
Update (operating system of the CPU) 646
Updating 391, 646
Firmware (operating system) of module and submodules - offline 646
Process image 71, 73, 74
Process Image 544, 545, 546
Updating Firmware 388
Updating Firmware in Modules and Submodules Online 388
Updating the Operating System (see Updating Firmware in Modules and Submodules Online) 388
Updating the Window Contents 383
Uploaded Blocks
Editing in the PG/PC 409
Uploading
Blocks from an S7 CPU 409
Station 408
Uploading from the Programmable Controller to the PG/PC 407
Upper and Lower Case 185, 186
Symbols 185, 186
Upper Limits for Entering Counters 423
Upper Limits for Entering Timers 422
User Data 641
User Interface 120
User Memory 412
Compressing 412
User program
Elements 62
User Program 540
Downloading 540
in the CPU Memory 540
Tasks 61
User Programs
Downloading 395
User rights 48
User Rights Through The Automation License Manager 37
User text libraries 347
Editing 347
User Text Libraries 346
Create 346
User-Defined Data Type
Correcting the Interface 308
User-Defined Data Types 205
User-Defined Data Types (UDT)
Entering the Structure 252
User-defined diagnostic messages
Displaying 351
User-Defined Diagnostic Messages
Creating and Editing 331
Uses for Saving/Archiving 517
Using
SFC 544
Using a Micro Memory Card as a data carrier 161
Using Arrays to Access Data 568
Using Clock Memory and Timers 648
Using Complex Data Types 567
Using Foreign-Language Character Sets 142
Using Multiple Instances 226
Using Older Projects 595
Using Structures to Access Data 571
Using the Clock Functions 647
Using the Parameter Type ANY 584
Using the Parameter Type POINTER 576
Using the System Memory Areas 542
Using the Variable Declaration in Logic Blocks 222
Using User-Defined Data Types to Access Data 204

V

Valves 57
Creating an I/O Diagram 57
Variable declaration table 219
for OB81 475
Variable Declaration Table 222
FC for the Sample Industrial Blending Process 611
OB for the Sample Industrial Blending Process 613
Purpose 222
System Attributes for Parameters 222
Variable Declaration Window
Entering a Multiple Instance entering 227

Variable Declarations
in STL Source Files 277
Variable Detail View 224
Structure 225
Variable table
Saving 415
Using 415
Variable Table 418
Copying/Moving 418
Creating 417
Creating and Opening 416
Editing 419
Example 419, 420
Example of Entering Addresses 424
Inserting a Contiguous Address Range 421
Inserting Addresses or Symbols 419
Maximum Size 420
Opening 417
Saving 418
Syntax Check 420
Variables 371, 372
Modifying 432
Monitoring - introduction 430
Operator control and monitoring 371, 372
Version 2 Projects 595
Converting 595
Virtual work memory
Setting 523

W

Warm restart 529, 530, 532, 534
Automatic 529
unbuffered 529
Canceling 529
Manual 529
Warning 548
Exceeding the L Stack 548
Overwriting the L Stack 548
Watchdog time 71
What Are the Different Messaging Methods? 311
What You Should Know About Access Protection 139
What You Should Know About HOLD Mode 444
What You Should Know About Micro Memory Cards (MMC) 160
What You Should Know About Testing in Single-Step Mode/Breakpoints 442
What You Should Know About The Change Log 141
What You Should Know About the HOLD Mode 444
Which Message Blocks Are Available? 317
Which Message Blocks Exist? 317
WinAC 161
Window Arrangement 120
Changing 129
Restoring 130
Saving 130
Window Contents 383
Updating 383
Windows 136
Toggling 136
Windows Language Settings 143
WinLC 161
Winter time 386
Wizard for supported creation of a project 145
WORD 556, 562
Word (WORD) 556
Area 556
Work Memory 395, 539, 540, 541
Working Area of a Window 120
Working with Libraries 214
Working with network templates 233
WR_DPARM 642, 645
WR_PARM 642, 645
WR_USMSG 471
Writing to a Data Block in Load Memory 160

Y

Y link 463