SIEMENS

SIMATIC

Bus link
Compact FF Link

Operating Instructions

Preface 1

Product overview 2

Description of the components 3

Application planning 4

Mounting 5

Connecting 6

Commissioning 7

Operation of the bus link 8

Service and maintenance 9

Functions 10

Alarm, error, and system messages 11

Technical data 12

Article numbers A

05/2022
A5E35651552-AC

Legal information

Warning notice system

This manual contains notices you have to observe in order to ensure your personal safety, as well as to prevent damage to property. The notices referring to your personal safety are highlighted in the manual by a safety alert symbol, notices referring only to property damage have no safety alert symbol. These notices shown below are graded according to the degree of danger.

⚠ DANGER
indicates that death or severe personal injury **will** result if proper precautions are not taken.

⚠ WARNING
indicates that death or severe personal injury **may** result if proper precautions are not taken.

⚠ CAUTION
indicates that minor personal injury can result if proper precautions are not taken.

NOTICE
indicates that property damage can result if proper precautions are not taken.

If more than one degree of danger is present, the warning notice representing the highest degree of danger will be used. A notice warning of injury to persons with a safety alert symbol may also include a warning relating to property damage.

Qualified Personnel

The product/system described in this documentation may be operated only by **personnel qualified** for the specific task in accordance with the relevant documentation, in particular its warning notices and safety instructions. Qualified personnel are those who, based on their training and experience, are capable of identifying risks and avoiding potential hazards when working with these products/systems.

Proper use of Siemens products

Note the following:

⚠ WARNING
Siemens products may only be used for the applications described in the catalog and in the relevant technical documentation. If products and components from other manufacturers are used, these must be recommended or approved by Siemens. Proper transport, storage, installation, assembly, commissioning, operation and maintenance are required to ensure that the products operate safely and without any problems. The permissible ambient conditions must be complied with. The information in the relevant documentation must be observed.

Trademarks

All names identified by ® are registered trademarks of Siemens AG. The remaining trademarks in this publication may be trademarks whose use by third parties for their own purposes could violate the rights of the owner.

Disclaimer of Liability

We have reviewed the contents of this publication to ensure consistency with the hardware and software described. Since variance cannot be precluded entirely, we cannot guarantee full consistency. However, the information in this publication is reviewed regularly and any necessary corrections are included in subsequent editions.

Siemens AG
Digital Industries
Postfach 48 48
90026 NÜRNBERG
GERMANY

A5E35651552-AC
Ⓟ 05/2022 Subject to change

Copyright © Siemens AG 2022.
All rights reserved

Table of contents

1 Preface 7

1.1 Security information 7

1.2 Preface 7

2 Product overview 11

2.1 Integration in the automation landscape 11

2.2 Integrating Compact FF Link 12

3 Description of the components 13

3.1 Compact FF Link 13

3.2 Active field distributor for connecting FF segments 15

4 Application planning 17

4.1 Applications for Compact FF Link 17

4.2 Configuration options 17

4.3 Configuration variants of the Compact FF Link 19

4.4 Single-channel connection of the Compact FF Link 21

4.5 Redundant connection of the Compact FF Link 21

5 Mounting 25

5.1 Installation rules for Compact FF Link 25

5.2 Mounting rules for active field distributors 25

5.3 Installing the Compact FF Link 26

5.3.1 Installing the Compact FF Link for single-channel operation 26

5.3.2 Installing the Compact FF Link for redundancy mode 28

5.4 Setting the PROFIBUS address and redundancy mode 30

6 Connecting 33

6.1 Electrical isolation and grounding 33

6.2 Connecting Compact FF Link without redundancy 34

6.2.1 Wiring the Compact FF Link for non-redundant mode 34

6.3 Connecting Compact FF Link with redundancy 35

6.3.1 Connecting Compact FF Link with coupler redundancy 35

6.3.2 Connecting Compact FF Link with ring redundancy 36

6.3.3 Wiring the FOUNDATION Fieldbus to the active field distributor 37

6.4 Connecting the power supply 37

6.5 Connecting PROFIBUS DP on Compact FF Link 38

6.6 Connecting FOUNDATION Fieldbus on Compact FF Link 39

7 Commissioning ... 41

7.1 Overview for commissioning the bus link ... 41

8 Operation of the bus link ... 43

8.1 Startup/operation without CPU ... 43

8.2 Startup with CPU ... 44

8.3 Behavior after certain events in the redundancy mode ... 44

8.4 Startup behavior ... 45
8.4.1 Startup behavior in non-redundant mode ... 46
8.4.2 Startup behavior in redundant mode ... 47

8.5 Handling the quality code of cyclic data ... 48

9 Service and maintenance ... 49

9.1 Replacing a bus link ... 49

9.2 Replacing active field distributors ... 50

9.3 Firmware update of the Compact FF Link ... 50

9.4 Restoring a Compact FF Link FF to the factory state ... 51

9.5 Maintenance ... 52

10 Functions ... 53

10.1 Redundancy with Compact FF Link ... 53

10.2 Identification and maintenance data (I&M data) ... 54

10.3 System modification during operation ... 55

10.4 Control in the Field (CiF) ... 56

11 Alarm, error, and system messages ... 59

11.1 Diagnostics using LEDs ... 59
11.1.1 LEDs of the Compact FF Link ... 59
11.1.2 LEDs of the active field distributors ... 64

11.2 Diagnostics of the Compact FF Link ... 64
11.2.1 Structure of slave diagnostics ... 66
11.2.2 Structure of the diagnostic blocks ... 67
11.2.2.1 Default diagnosis ... 67
11.2.2.2 Identifier-related diagnostics ... 69
11.2.2.3 Module status ... 71
11.2.2.4 Status message ... 73
11.2.2.5 H status ... 73

11.3 Interrupts ... 75

11.4 Reading out diagnostics from FF devices ... 77

12 Technical data ... 79

12.1 General technical data ... 79
12.1.1 Standards and Approvals ... 79
12.1.2 Use in zone 2 potentially explosive areas ... 83

12.1.3 Electromagnetic Compatibility ... 83
12.1.4 Shipping and storage conditions ... 84
12.1.5 Mechanical and climatic ambient conditions for operation ... 85
12.1.6 Specifications for insulation tests, protection class and degree of protection ... 87
12.1.7 Rated voltage ... 87

12.2 Technical Specifications Compact FF Link (6ES7655-5BA00-0AB0) ... 87

12.3 Technical specifications of active field distributors ... 89

A Article numbers ... 91

A.1 Components for use of the Compact FF Link ... 91

A.2 Accessories for PROFIBUS DP ... 91

A.3 Accessories for FOUNDATION Fieldbus ... 92

Glossary ... 93

Index ... 101

Preface 1

1.1 Security information

Siemens provides products and solutions with industrial security functions that support the secure operation of plants, systems, machines and networks.

In order to protect plants, systems, machines and networks against cyber threats, it is necessary to implement – and continuously maintain – a holistic, state-of-the-art industrial security concept. Siemens' products and solutions constitute one element of such a concept.

Customers are responsible for preventing unauthorized access to their plants, systems, machines and networks. Such systems, machines and components should only be connected to an enterprise network or the internet if and to the extent such a connection is necessary and only when appropriate security measures (e.g. firewalls and/or network segmentation) are in place.

For additional information on industrial security measures that may be implemented, please visit
https://www.siemens.com/industrialsecurity.

Siemens' products and solutions undergo continuous development to make them more secure. Siemens strongly recommends that product updates are applied as soon as they are available and that the latest product versions are used. Use of product versions that are no longer supported, and failure to apply the latest updates may increase customer's exposure to cyber threats.

To stay informed about product updates, subscribe to the Siemens Industrial Security RSS Feed under
https://www.siemens.com/cert.

1.2 Preface

Bus links are gateways between bus systems and enable the communication connection of the bus systems.

The Compact FF Link is a bus link for the communication between PROFIBUS DP and FOUNDATION Fieldbus H1 (hereafter referred to simply as FF). In automation systems configured with *SIMATIC PCS 7* and *SIMATIC STEP 7*, the Compact FF Link enables the integration of FF devices on an FF segment.

Purpose of the operating instructions

These operating instructions provide you with all the information you need to plan, install, wire, and commission a bus link based on the "Compact FF Link" module.

Basic knowledge required

To understand these operating instructions you should have general experience in the field of automation engineering. Basic knowledge of the following is also necessary:

- Automation system S7-400
- Distributed I/O systems on PROFIBUS DP
- *STEP 7* / *SIMATIC PCS 7* basic software, in particular:
  - Working with *SIMATIC Manager*
  - Hardware configuration with *HW Config*
  - *SIMATIC PCS 7* Process Control System
  - Process Device Manager *SIMATIC PDM*
- FOUNDATION Fieldbus

Scope of these operating instructions

These operating instructions apply for the following products:

Product	Article number	Note
Compact FF Link	6ES7655-5BA00-0AB0	Module of the bus link; redundancy possible
BM Compact FF Link	6ES7655-5EF00-0AA0	Bus module for redundancy mode

The use of two Compact FF Links make redundant operation possible and additional functions when using active field distributors:
Active Field Distributor and Active Field Splitter (Page 15)

- Coupler redundancy with active field splitter (AFS)
- Ring redundancy with active field distributor (AFD..)

You can find supplementary information on this in Operating Instructions DP/PA coupler, Active Field Distributor, DP/PA Link, and Y Link (http://support.automation.siemens.com/WW/view/en/1142696).

These operating instructions contain a description of the components that was valid at the time the operating instructions were published. We reserve the right to include product information with information updates with new components and components with a new product status.
Information on approved components:
Catalog Overview*Process control system PCS 7, Released modules*

Configuring with *SIMATIC PCS 7*

The Compact FF Link can be configured with SIMATIC PCS 7: as of V8.1 SP1 (STEP 7 V5.5 SP4 HF6)

This requires the use of SIMATIC PDM: V8.2 SP1 or higher

Position in the overall information structure

Depending on the hardware used you require the following manuals in addition to these operating instructions:

- Operating Instructions DP/PA coupler, Active Field Distributor, DP/PA Link, and Y Link (http://support.automation.siemens.com/WW/view/en/1142696)
- The manual for the implemented DP master, including the following special information:
  - Configuring and commissioning of a DP master system
  - Description of the DP master
- The system manual SIMATIC NET, PROFIBUS network manual (http://support.automation.siemens.com/WW/view/en/35222591)
- PCS 7 documentation (http://www.siemens.com/pcs7-documentation) that describes the handling of the SIMATIC PCS 7 process control system, for example:
  - Configuration Manual *PCS 7 Process Control System; Engineering System*
  - Function Manual *Process Control System PCS 7; Fault-tolerant Process Control Systems*
  - Function Manual *Process Control System PCS 7, FOUNDATION Fieldbus*
- Operating Manual Process Control System PCS 7, SIMATIC PDM (http://support.automation.siemens.com/WW/view/en/10806857/133300) that describes how to work with the *SIMATIC PDM* Process Device Manager.

Guide

These operating instructions are subdivided into the following subjects:

- Product overview and description of the components
- Installing, wiring and commissioning
- Operation and diagnostics
- Technical specifications
- Appendices
- Important terms are explained in the glossary.
- The index helps you to quickly find all texts relevant to your keywords.

Conventions

The terms "FOUNDATION Fieldbus" and "FF" are used synonymously in this manual. "FF device", for example, denotes a device that behaves in accordance with the FOUNDATION Fieldbus technology. The same applies to terms such as "FF bus system", "FF segment" etc.

However, the "Fieldbus Foundation" is an organization that is dedicated to the dissemination of the FOUNDATION Fieldbus technology.

Recycling and disposal

The described components are ecologically compatible, and thus suitable for recycling. For environmentally sound recycling and disposal of your old devices please contact a certified disposal service company for electronic scrap.

Additional support

If you have any questions relating to the products described in these operating instructions and do not find the answers in this document, please contact your local Siemens representative (http://www.siemens.com/automation/partner).

A guide to the technical documentation for the various SIMATIC products and systems is available on the Internet (http://www.siemens.com/simatic-tech-doku-portal).

The online catalog and online ordering system are available on the Internet (http://mall.automation.siemens.com).

Training Center

Siemens offers a series of courses that will help you getting started with the components and the SIMATIC S7 and SIMATIC PCS 7 automation system. Please contact your regional training center or the central training center in D-90327, Nuremberg, Germany (http://www.sitrain.com).

Technical Support

You can contact Technical Support for all Industry Automation products by means of the Web form for the Support Request (http://www.siemens.com/automation/support-request).

Additional information about Siemens Technical Support is available on the Internet (http://www.siemens.com/automation/csi_en_WW/service).

Service & support on the Internet

In addition to our documentation, we offer a comprehensive knowledge base on the Internet (http://www.siemens.com/automation/service&support).

There you will find:

- Our Newsletter, which constantly provides you with the latest information about your products
- The right documents for you, using our Service & Support search engine
- A bulletin board in which users and specialists worldwide exchange their know-how
- Your local contact partner for Industry Automation in our contacts database
- Information about on-site services, repairs, spare parts, and lots more.

Product overview

2

2.1 Integration in the automation landscape

Distributed I/O Devices - Field of Application

When a system is configured, the inputs and outputs from and to the process are often integrated centrally in the automation system.

In the case of greater distances of the inputs and outputs from the automation system, the wiring may be very extensive and confusing. Electromagnetic interference may impair reliability.

Distributed I/O is suitable for use with systems of this kind.

- The PROFIBUS DP master is located in a central position.
- The I/O devices (inputs and outputs) operate locally and decentralized.

What is PROFIBUS DP?

PROFIBUS DP is an open bus system to IEC 61784-1 CP 3/1 with "DP" transmission protocol (DP stands for Distributed Peripherals).

Physically PROFIBUS DP is implemented either as an electrical network based on shielded twisted-pair cables, or as an optical network based on fiber optic cable.

The "DP" transmission protocol enables cyclic data exchange between the controller CPU and the distributed I/O devices.

What is FOUNDATION Fieldbus?

The FOUNDATION Fieldbus (here FF-H1 bus) is an open bus system that permits the use of field devices from different manufacturers within one system. In many aspects, the design of an FF system corresponds to the IEC fieldbus model. The FF-H1 bus conforms to its specifications in IEC 61158-2.

The FF-H1 bus transmission conforms to the international standard IEC 61784-1 CP 1/1.

The FF-H1 bus can even be used in hazardous areas. The FF-H1 bus enables transmitters and actuators in safe and hazardous areas to communicate with the automation system over long distances. With the FF-H1 bus, the field devices can be be simultaneously supplied power via the data cable.

The Compact FF Link is available for the transition of the transmission system from PROFIBUS DP to FF-H1 bus.

Note

Use in hazardous areas

The Compact FF Link is approved only for use in **Zone 2** hazardous areas.

- When planning for use in hazardous areas, pay attention to the approved use area of the individual components.
- If you want to use the devices on the FF-H1 bus in the hazardous area, all utilized components must be approved for use in that area.

2.2 Integrating Compact FF Link

The following figure shows the basic integration of the Compact FF Link into the automation landscape and refers to the documentation of the respective system components.

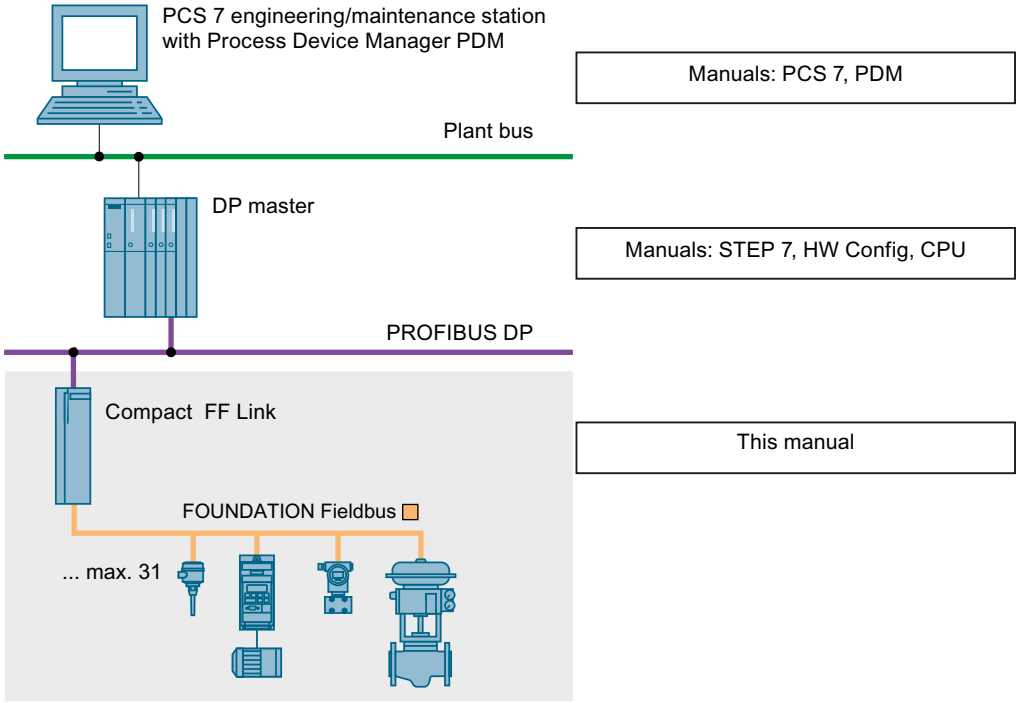

Figure 2-1 Integration of the FF Link into the information landscape

The Compact FF Link acts as a DP slave for the automation system and an FF Link Master for the FF devices.

Description of the components 3

3.1 Compact FF Link

Functions

- Interface module (DPV1 slave) on the higher-level DP master system (in HW Config: IM 655-5 FF)
- Field device coupler for a lower-level FF bus system (in HW Config: Field Device Coupler)
- FF Link master functionality
- Link Active Scheduler (LAS) for the central communication control of the distributed communication of the FF segment.

Properties

- Conversion of physical transmission characteristics to symmetrical physical bus characteristics according to IEC 61784-1 CP 1/1
- Integrated power supply for FF (Power Conditioner)
- Connection of up to 31 FF devices, max. current consumption of all components 500 mA
- Automatic bus termination enables easy commissioning
- Transmission rates:
  - On the DP master system: 9.6 kbps to 12 Mbps
  - On the FF segment: 31.25 kbps
- Support of system modifications during operation
  - In non-redundant mode
  - In redundancy mode
- Diagnostics via LEDs and the user program
- Extended environmental conditions

Operating principle

- The Compact FF Link is a DPV1 slave on the higher-level DP master system and acts as a proxy for the nodes connected to the lower-level bus system (FF devices).
  A corresponding DP master is required for use of the Compact FF Link. If necessary, the operating mode for the DP master being used can be selected in the Object Properties in HW Config. This must be "DPV1".
- PROFIBUS DP and the FF segment are decoupled from one another:
  - Physically (galvanically)
  - In terms of communication
    - In terms of protocol
    - Temporally
- Together with the connected FF devices, the Compact FF Link forms an independent, lower-level bus system (FF segment).
- Within the FF segment, the Compact FF Link, as an FF Link Master, controls the distributed communication deterministically using the LAS. Some FF devices can perform process control functions within the FF segment. This functionality is referred to as Control in the Field (CiF).
- The CiF functionality is independent of any connection to the DP master system. A loss of the connection to the DP master system has no effect on the CiF functionality on the FF segment.

Information for redundant operation

- A bus link with increased availability of the FF segment is obtained by a redundant configuration with two Compact FF Links.
- Both Compact FF Links have the same configuration information, the same parameter assignment, and the same input data from the FF bus. Which of the two Compact FF Links is active on the FF bus depends solely on the corresponding command from the higher-level DP master. Only the active Compact FF Link sends cyclic output data to the FF bus (Send request to FF devices).
- The acyclic data is independent of the cyclical data.
- If the active Compact FF Link fails, there is a bumpless changeover of the active channel.

Note

The redundant configuration with two Compact FF Links requires the connection to a redundant automation system (SIMATIC S7-400H).

User data of the Compact FF Link

The DP user data frame of the Compact FF Link is dependent on the number of configured FF devices. It comprises the data blocks of the configured FF devices arranged one after the other. The data blocks are sorted in ascending order according to FF address.

In accordance with the FOUNDATION Fieldbus guideline (refer to section Standards and Approvals (Page 79)), each process variable is assigned a status byte that specifies the status of the process variable.

When an FF device fails, the associated input data, including the status byte, is reset in the user data frame of the bus link. Then the corresponding information is entered into the diagnostic frame.

On recovery of the FF device, corresponding information is entered in the diagnostic frame. Virtually simultaneously, the valid input data of the FF device is made available again in the user data frame of the bus link. The associated status byte displays the valid data.

Note

The status data of the FF devices is evaluated immediately by the *SIMATIC PCS 7* drivers and diagnostic blocks and is then made available on the operator and maintenance stations.

3.2 Active field distributor for connecting FF segments

Active field distributors (Active Field Distributor and Active Field Splitter)

Active field distributors can be operated on a bus link. FF devices such as measuring instruments, sensors, and actuators can be connected to these field distributors.

You can find example configurations with active field distributors in the following sections:

- Section "Single-channel connection of the Compact FF Link (Page 21)"
- Section "Redundant connection of the Compact FF Link (Page 21)"

You can find types of active field distributors released for PCS 7 in the catalog overview *Process control system PCS 7, released modules*.

Active Field Splitter

An active field splitter offers the following functions:

- Coupler redundancy on an FF segment, for redundant connections to the automation system
- Connecting FF devices to a non-redundant FF segment

Active Field Distributor

An active field distributor offers the following functions:

- FF device connection
- Decoupling the FF device from an FF segment
- Automatic bus termination
- Extension and replacement of field devices during operation of the FF segment

- Use in potentially explosive atmospheres with appropriate active field distributor.
  Field devices in potentially explosive atmospheres zone 1 and zone 0 are possible, depending on the approvals for the active field distributor used.
- The maximum number of FF devices on the Active Field Distributor depends on the type of Active Field Distributor.
- Ring redundancy is possible to an FF segment for redundant connections to the automation system

Properties

- Diagnostics via LEDs
- Cable glands for the FF spur lines to the FF devices
- Connection of the FF main line and the FF stub lines via screw terminals
- Connections protected against polarity reversal
- Power supply via the FF bus
- Suitable for screw mounting on surfaces, or installation on a mounting rail by means of adapter
- Grounding terminal outside
- The number of FF devices you can connect to an active field distributor differs depending on the active field distributor version used. (Refer to the DP/PA coupler, Active Field Distributor, DP/PA Link, and Y Link (http://support.automation.siemens.com/WW/view/en/1142696) operating instructions. Up to 31 FF devices can be connected to an FF segment.
- The maximum current that the components on the FF segment require always depends on the bus link used.

Application planning

4

4.1 Applications for Compact FF Link

The Compact FF Link is intended for the following applications:

- **Single-channel operation on a non-redundant S7-4xxH or on a non-redundant DP master system**
  (basic schematic in section "Single-channel connection of the Compact FF Link (Page 21)")
- **Operation on a redundant S7-4xxH or on a redundant DP master system**
  (including FF Link Master redundancy)
  (basic schematic in section "Redundant connection of the Compact FF Link (Page 21)")
  - Operation with coupler redundancy
  - Operation with ring redundancy

4.2 Configuration options

Configuration options

A DP master system can be configured as follows:

- The number of bus links on a DP master system is restricted by:
  - the number of bus nodes: maximum of 125 on the DP master system (including Compact FF Link)
  - the number of configurable station addresses
- Each FF device uses an address in the configuration.
- The configuration frame and user data frames of the bus link are both derived from the frame contents of the lower-level FF devices.
- The maximum length of the frames for I/O data at the PROFIBUS DP end: 244 bytes in each case
- An FF segment is limited to the size of the process image of the bus link (max. 244 bytes for I/O data in each case).
  - You can distribute the 244 bytes for inputs among the FF devices:
    - Digital inputs (2 bytes per value, but max. 40 DI)
    - Analog inputs (5 bytes per value, but max. 40 AI)
  - You can distribute the 244 bytes for outputs among the FF devices:
    - Digital outputs (2 bytes per value, but max. 40 DO)
    - Analog outputs (5 bytes per value, but max. 40 AO)
  - A maximum of 64 bytes for outputs and 64 bytes for inputs are used for each FF device.

Requirements for use

- Software requirements:
  The following software packages must be installed:
  - *SIMATIC PCS 7 as of V8.1 SP1*
  - *STEP 7 as of V5.5 SP4 HF6*
    The version of STEP 7 installed with PCS 7 V8.1 SP1 can be updated with the Hardware Upgrade Package (HUP) for the support of Compact FF Link.
  - *SIMATIC PDM* as of V8.2 SP1 with add-on package "SIMATIC PDM Communication FOUNDATION Fieldbus"
- Hardware requirements:
  - The Compact FF Link is connected via an external CP 443-5 communication processor:
    - Standard CPU V4.0 or higher
    - H-CPU V4.0 or higher
  - The Compact FF Link is connected via the internal PROFIBUS DP interface of the CPU:
    - Standard CPU V5.1 or higher
  - For redundant configuration:
    - BM Compact FF Link

Parameter assignment of the FF devices

The FF device parameters are assigned using *SIMATIC PDM* from a PG/PC connected to the higher-level PROFIBUS DP or the process control system. Additional information can be found in Operating Manual Process Control System PCS 7, SIMATIC PDM 8.2 (http://support.automation.siemens.com/WW/view/en/10806857/133300)

Switchover time on FF in redundancy mode

When there is a master-to-standby switchover or the active Compact FF Link fails, the FF devices are processed via the standby Compact FF Link.

In redundancy mode, all states of the inputs and outputs are retained at a switchover of the active Compact FF Link to the other Compact FF Link. Without changes to the FF configuration, the maximum switchover time amounts to 70 ms.

The switchover time is defined as the time between activation of the standby FF Link and availability of the input data.

Communication links from the PG / PC to the FF devices

You can communicate with the FF devices via the Compact FF Link using *SIMATIC PDM*.

Additional information can be found in Commissioning Manual Process Control System PCS 7, FOUNDATION Fieldbus (http://www.siemens.com/pcs7-documentation).

In redundancy mode, all communication links from the PG / PC to the FF devices are retained at a switchover of the active Compact FF Link to the other Compact FF Link.

4.3 Configuration variants of the Compact FF Link

Different configuration variants are possible with the Compact FF Link:

- Configuration with one Compact FF Link
- Configuration with two Compact FF Links

Configuration variant with one Compact FF Link (configuration without FF Link Master redundancy)

Configuration; information about this can be found in section "Single-channel connection of the Compact FF Link (Page 21)".

Information about installation can be found in section Installing the Compact FF Link for single-channel operation (Page 26).

Configuration variants with two Compact FF Links (configuration with FF Link Master redundancy)

A bus link with increased availability of the FF segment is obtained by redundant configuration with two Compact FF Links. The redundant configuration with two Compact FF Links requires the connection to a redundant automation system (S7-4xxH).

For redundant operation you always need the BM Compact FF Link bus module and two Compact FF Links (redundant pair). Depending on the configuration variant, at least one active field distributor is required:

- **Configuration with coupler redundancy**
  You also need an active field splitter, in the FF segment. The active field splitter connects two Compact FF Links to an FF segment. The Compact FF Links monitor each other for power failure and detect errors.
  Information about this can be found in section "Redundant connection of the Compact FF Link (Page 21)".
- **Configuration with ring redundancy**
  You also need at least one active field distributor in the FF segment. The active field distributor enables the configuration of ring redundancy on the FF segment. The configuration increases the availability of the FF segment and includes the coupler redundancy.
  The use of ring redundancy allows the bus segment to be repaired or extended during operation. The automatic termination of the cable end allows, for example, additional FF devices to be connected to extend the bus segment.
  Information on this can be found in section "Redundant connection of the Compact FF Link (Page 21)"

Information about installation can be found in section Installing the Compact FF Link for redundancy mode (Page 28).

Note

Only one FF segment can be connected per bus link.

For redundant operation the Compact FF Links should always be operated with separate power supplies.

Reference

For more detailed information about the configuration variants with Compact FF Link, refer to the following documents:

- Operating Instructions *Active field distributors*
- Function Manual *PCS 7 Process Control System, Fault-Tolerant Process Control Systems* (V8.1 SP1), section "Redundant PROFIBUS PA".

The statements in these documents apply accordingly, with the following exceptions:

Special features of the Compact FF Link	
Number of FF segments per bus link	1
Diagnostics function	Yes
Power Conditioner redundancy	Available with ring or coupler redundancy
Intrinsically safe operation of field devices	Only with corresponding field distributor, see section "Active field distributor for connecting FF segments (Page 15)"
Support of Ex [i] coupler	No

4.4 Single-channel connection of the Compact FF Link

Single-channel connection of the Compact FF Link of the FOUNDATION Fieldbus

The following figure shows an example of the single-channel connection of the Compact FF Link with a non-redundant DP master system.

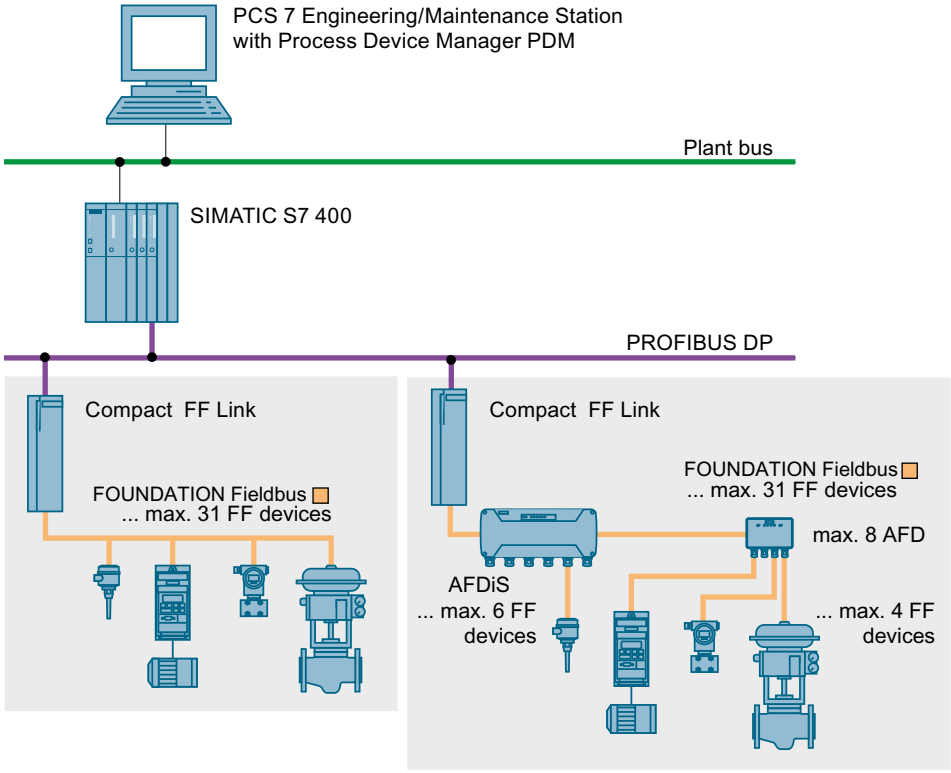

Figure 4-1 Single-channel connection of the FOUNDATION Fieldbus

Note

Operation with active field distributor

The active field distributor enables mutual decoupling in case of FF device faults.

4.5 Redundant connection of the Compact FF Link

Availability

The bus link can be configured redundantly.

Note on configuration

The following should be identical for mutually redundant components:

- Article number
- Hardware version
- Firmware version

You can find additional information on this in the section "System modification during operation (Page 55)".

Redundant connection of the Compact FF Link and coupler redundancy on the FOUNDATION Fieldbus

The figure below shows an example of the redundant connection of Compact FF Link to a SIMATIC S7-410H or to a redundant DP master system. Coupler redundancy is configured with an active field splitter (AFS) on the FF segment. The active field distributor (AFD) connected to the FF segment enables mutual decoupling in case of FF device faults.

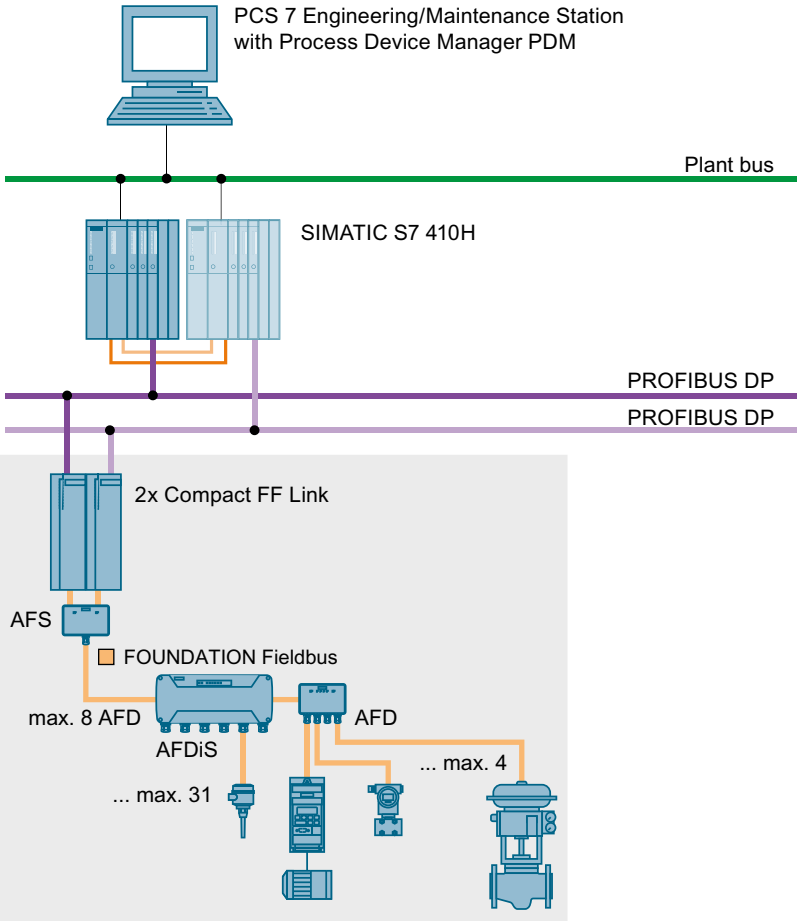

Figure 4-2 Redundant connection and coupler redundancy on the FOUNDATION Fieldbus

Redundant connection of the Compact FF Link and ring redundancy on the FOUNDATION Fieldbus

The figure below shows an example of the redundant connection of Compact FF Link to a SIMATIC S7-410H or to a redundant DP master system. Ring redundancy is configured with an active field distributor (AFD) on the FF segment.

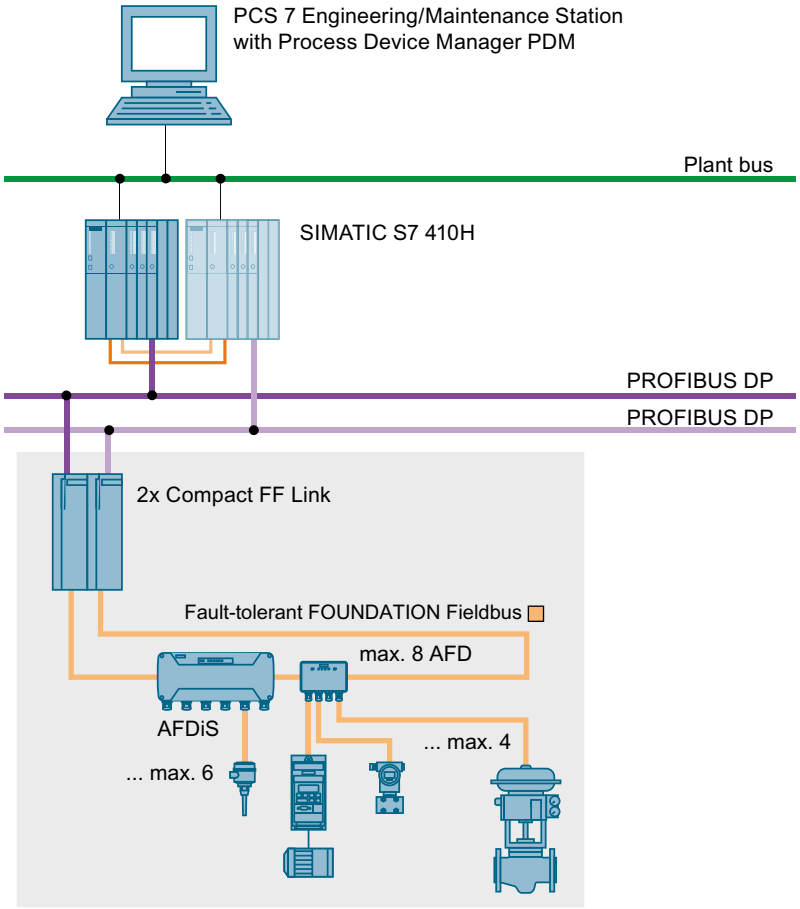

Figure 4-3 Redundant connection and ring redundancy on the FOUNDATION Fieldbus

Note

Configuration

Ring redundancy has been tested and approved for use with Siemens network components.

Mounting 5

5.1 Installation rules for Compact FF Link

Mounting position

The Compact FF Link can be mounted vertically or horizontally.

WARNING

Open equipment

The Compact FF Link is open equipment. This means that they may only be installed in enclosures, cabinets, or electrical service rooms that can only be accessed by using a key or a tool. Only authorized personnel may have access to the enclosures, cabinets, or electrical service rooms.

NOTICE

Compact FF Link and associated bus module

The Compact FF Link may only be operated with the "BM Compact FF Link" bus module.

- These components must **not** be operated in combination with other modules/bus modules.
- The use of a bus connector is **not permitted**.

Failure to observe this information may result in irreparable electrical damage to the utilized components!

Mounting system

The Compact FF Link is installed on mounting rails. Free space of 40 mm must be maintained above and below the modules for trouble-free mounting.

Additional instructions for installing modules in the S7 mounting system are available in Installation Manual Automation System S7-400, Hardware and Installation (http://support.automation.siemens.com/WW/view/en/1117849):

5.2 Mounting rules for active field distributors

The information in this section is valid for the following active field distributors:

- Active Field Splitter
- Active Field Distributor

Mounting position

The active field distributors can be installed in any orientation.

Mounting system

The active field distributors can be screw-mounted onto a flat, vibration-free surface with sufficient load bearing capacity. The modules can also be installed on a mounting rail using an adapter.

For trouble-free installation of the modules, a clearance of 60 mm must be maintained on their side and below them.

For detailed information on installation, refer to Operating Instructions *DP/PA Coupler, Active Field Distributors, DP/PA Link and Y Link*.

See also

Active field distributor for connecting FF segments (Page 15)

5.3 Installing the Compact FF Link

5.3.1 Installing the Compact FF Link for single-channel operation

Introduction

The following application is available for the configuration variant with one Compact FF Link:

- Single-channel operation
  Configuration with the mounting rail "for standard configuration"

Basic installation steps

Carry out the following installation steps in the order given:

1. Install the mounting rail
2. Install the module on the mounting rail

Components required

Required components for single-channel operation (1 x Compact FF Link)

- Mounting rail "for standard configuration"
- Compact FF Link

Typical configuration

The following figure shows the typical configuration of a bus link with a Compact FF Link when the front doors are open.

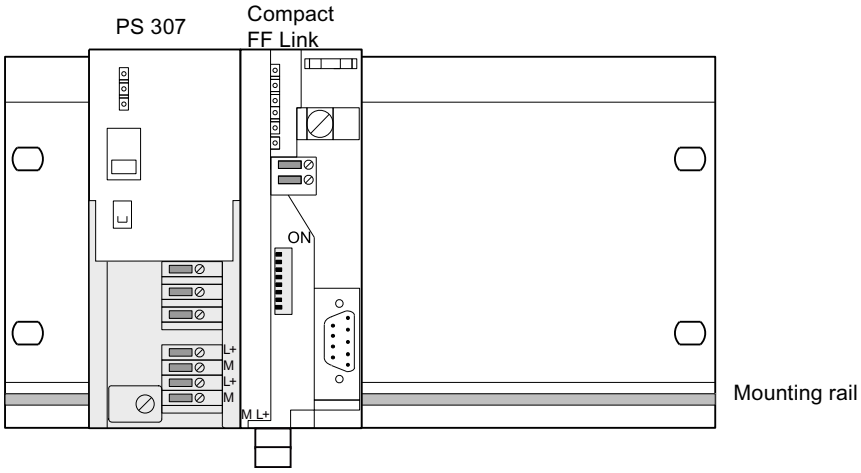

Figure 5-1 Configuration of the bus link for single-channel operation

Installing the bus link with a Compact FF Link

1. Hook the Compact FF Link into the mounting rail "for standard configuration" and swing it downward.
2. Screw the Compact FF Link into place.

Removing the bus link

To remove the bus link, follow the same procedure in reverse order.

If the bus link is already in operation, switch off the power supplies before you remove it.

See also

Accessories for PROFIBUS DP (Page 91)

Accessories for FOUNDATION Fieldbus (Page 92)

5.3.2 Installing the Compact FF Link for redundancy mode

Introduction

The following configuration variants of the bus link with 2 Compact FF Links are possible for use of FF Link Master redundancy:

- Configuration with coupler redundancy
  See Redundant connection and coupler redundancy on the FOUNDATION Fieldbus (Page 21)
- Configuration with ring redundancy
  See Redundant connection and ring redundancy on the FOUNDATION Fieldbus (Page 23)

Configuration with bus module

For redundancy mode the Compact FF Links must be installed with the mounting rail "for module switching during runtime" and active BM Compact FF Link bus module.

Components required

- Mounting rail "for module switching during runtime"
- 2 x Compact FF Links (redundant coupler pair)
- BM Compact FF Link

NOTICE
Compact FF Link and associated bus module The Compact FF Link may only be operated with the "BM Compact FF Link" bus module. • These components must **not** be operated in combination with other modules/bus modules. • The use of a bus connector is **not permitted**. **Failure to observe this information may result in irreparable electrical damage to the utilized components!**

Basic installation steps

Carry out the following installation steps in the order given:

1. Install the mounting rail
2. Install the bus module and modules

Typical configuration

The following figure shows the typical configuration of a bus link with two Compact FF Links for redundancy mode with two power supply modules when the front doors are open.

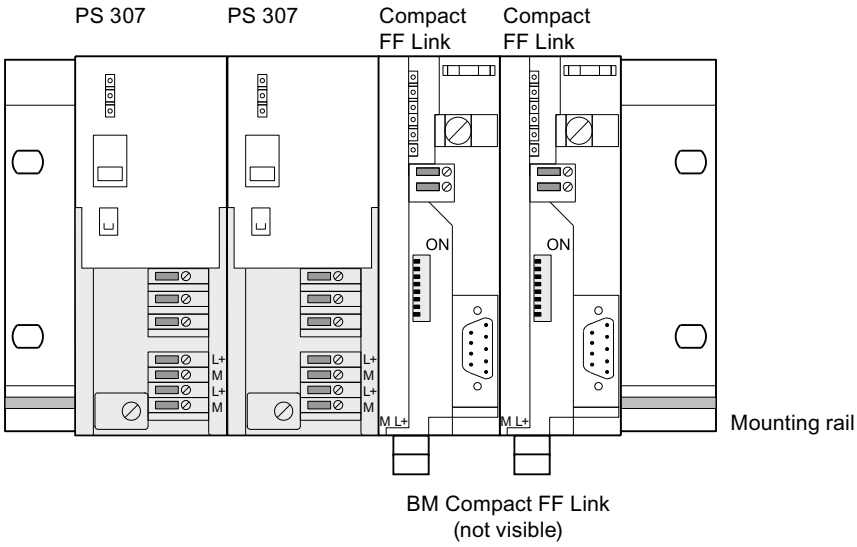

Figure 5-2 Typical configuration of a bus link for redundancy mode

Installing the bus link for redundant mode

1. Hook the lower edge of the BM Compact FF Link onto the rail, press it into the mounting rail (a) and push it to the left until it engages (b).
   If you are using the 482.6 mm or 530 mm mounting rail and position the BM Compact FF Link in the right-hand engaged position, you can install two additional PS 307; 2A or one PS 307; 5A to the left of the bus module.

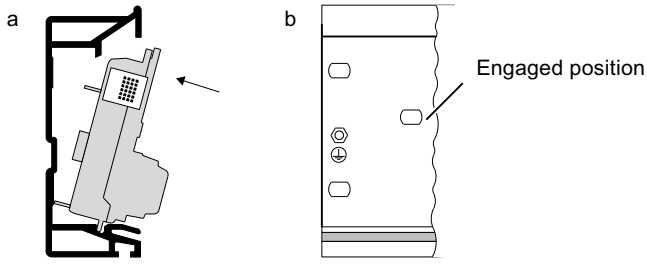

2. Hook and press the BM Compact FF Link into the mounting rail.
3. Insert the two Compact FF Links into the BM Compact FF Link.
4. Screw the modules into place. This also fastens the bus module on the mounting rail.

Removing the bus link for redundant mode

To remove the bus link, follow the same procedure in reverse order.

If the bus link is already in operation, switch off the power supplies before you remove it.

See also

Accessories for PROFIBUS DP (Page 91)

Accessories for FOUNDATION Fieldbus (Page 92)

5.4 Setting the PROFIBUS address and redundancy mode

Definition

Each bus node must be assigned a PROFIBUS address for unambiguous identification on PROFIBUS DP.

Rules

The following rules apply to the PROFIBUS address of the Compact FF Link in the higher-level DP master system:

- Valid PROFIBUS addresses: 1 to 125
- In a DP master system, each PROFIBUS address may be assigned once only.
- The same PROFIBUS address must be set for both Compact FF Links in redundancy mode.

Note

Changing the PROFIBUS address

You set the PROFIBUS address using the DIP switch on the front of the Compact FF Link (see the following procedure)

- **Changing the PROFIBUS address during operation is not permitted.**
  To ensure that the PROFIBUS address is not changed accidentally and unnoticed by the plant operator, the Compact FF Link outputs a corresponding diagnostic message if the PROFIBUS address is changed during operation (see section Diagnostics of the Compact FF Link (Page 64)).
- **A change to the PROFIBUS address is accepted by the Compact FF Link only after a switch-on/switch-off of the power supply of all Compact FF Links of an FF segment.**

Select redundancy mode

You select redundancy mode using the "RING" DIP switch (see the following table in section "Procedure"):

Tools required

You need a screwdriver with a 3 mm wide blade to set the DIP switch on the Compact FF Link.

Procedure

1. Open the front panel of the Compact FF Link.
2. Set the desired PROFIBUS address using a screwdriver. If necessary, activate the ring redundancy.

Example for setting the switch	Notes
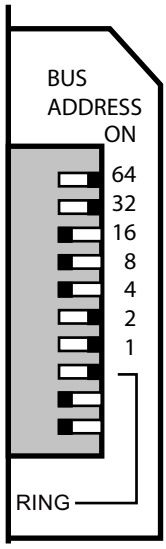	**PROFIBUS address** The PROFIBUS address represents the sum of the values of all switches in the "ON" position (switch position to the right). Example for setting the switch: Switch setting = ON 64 + 32 + 2 +1 = PROFIBUS address 99 Default: PROFIBUS address 0
	RING (not relevant for non-redundant operation) You switch redundancy mode using the "RING" DIP switch: • OFF: Coupler redundancy or non-redundant configuration • ON: Ring redundancy Activate for both Compact FF Links **Note on configuration:** The position of the "RING" switch during operation must match the configuration of the integrated fieldbus coupler in HW Config.

Connecting 6

6.1 Electrical isolation and grounding

Introduction

You can wire the 24 V power supply to the described modules depending on the requirements of your system configuration:

- Grounded configuration
- Ungrounded configuration

Power supply

The 24 V DC power supply is connected by a 2-pin connector from the bottom. You can find additional information on this in section "Connecting the power supply (Page 37)".

Electrical isolation for Compact FF Link

The following areas of the Compact FF Link are electrically isolated from one other:

- 24 V power supply
- PROFIBUS DP
- FOUNDATION Fieldbus

Reference

You can find more detailed information about these topics in Operating Instructions *DP/PA coupler, Active Field Distributor, DP/PA Link and Y Link*:

- General rules and regulations
- Grounding the active field distributors
- Operation with grounded supply
- Operation with ungrounded reference potential

Due to the same physical conditions, the specifications made there apply accordingly.

For information on the cable used, refer to section Article numbers (Page 91).

6.2 Connecting Compact FF Link without redundancy

6.2.1 Wiring the Compact FF Link for non-redundant mode

Connections of the Compact FF Link

The figure below shows all connections you must establish from and to the Compact FF Link for non-redundant mode.

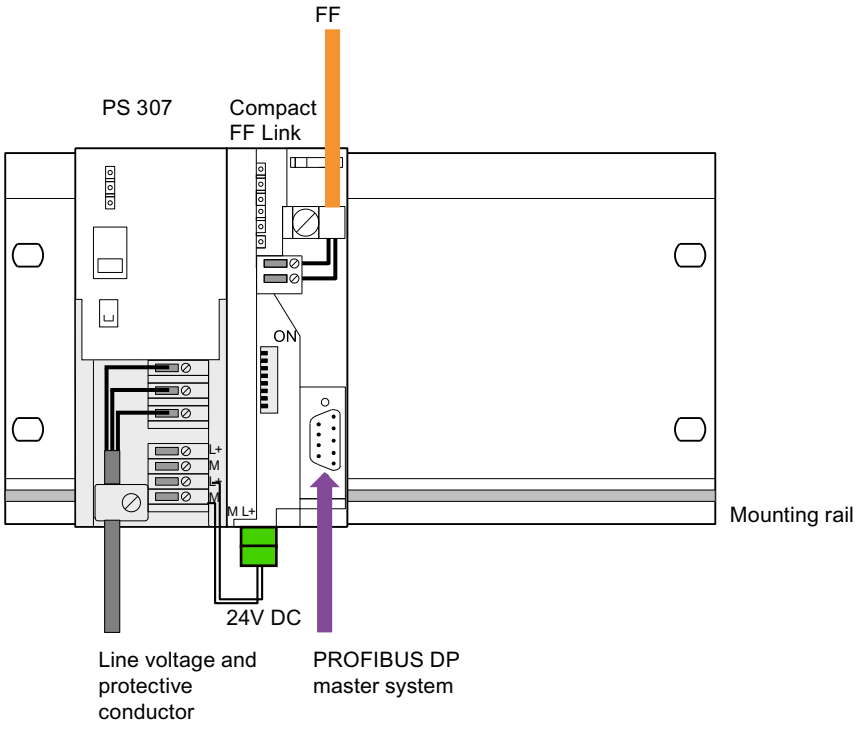

Figure 6-1 Connections of the Compact FF Link for non-redundant mode

See also

Connecting the power supply (Page 37)

6.3 Connecting Compact FF Link with redundancy

6.3.1 Connecting Compact FF Link with coupler redundancy

Connections of the bus link with coupler redundancy

The following figure shows all connections you must establish for operation of the bus link with coupler redundancy on the FF bus.

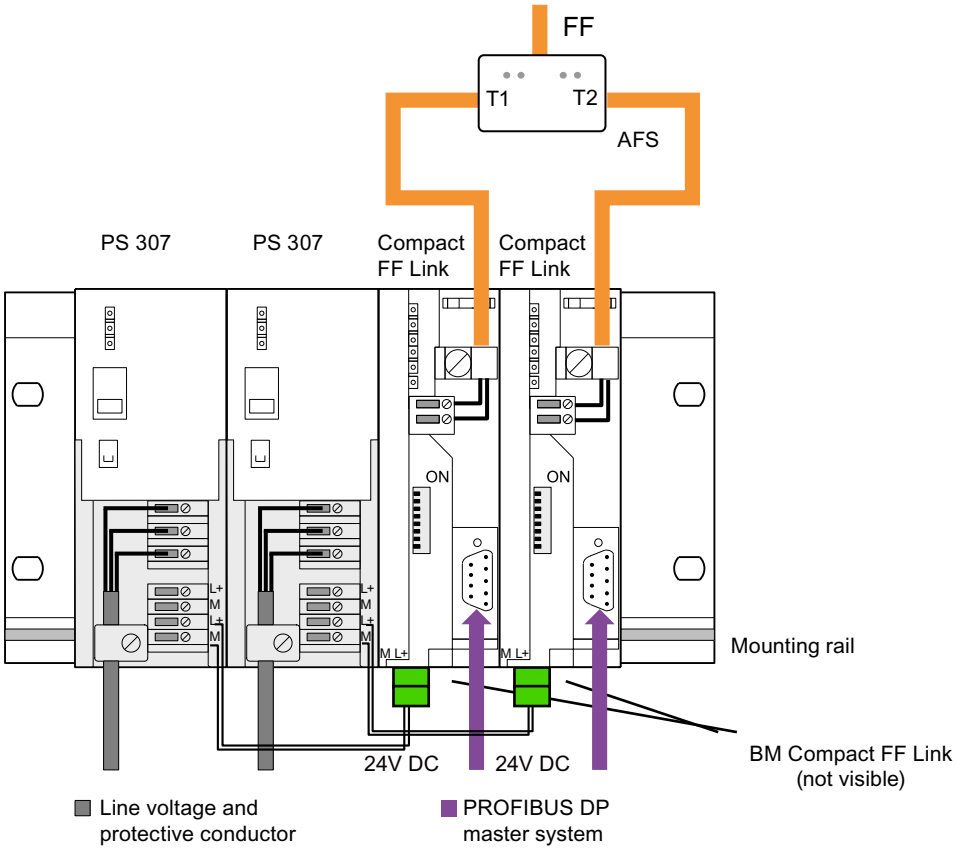

Figure 6-2 Connections for bus link with coupler redundancy on the FF bus

See also

Connecting the power supply (Page 37)

6.3.2 Connecting Compact FF Link with ring redundancy

Connections of the bus link with ring redundancy

The following figure shows all connections you must establish for operation of the bus link with ring redundancy on the FF bus.

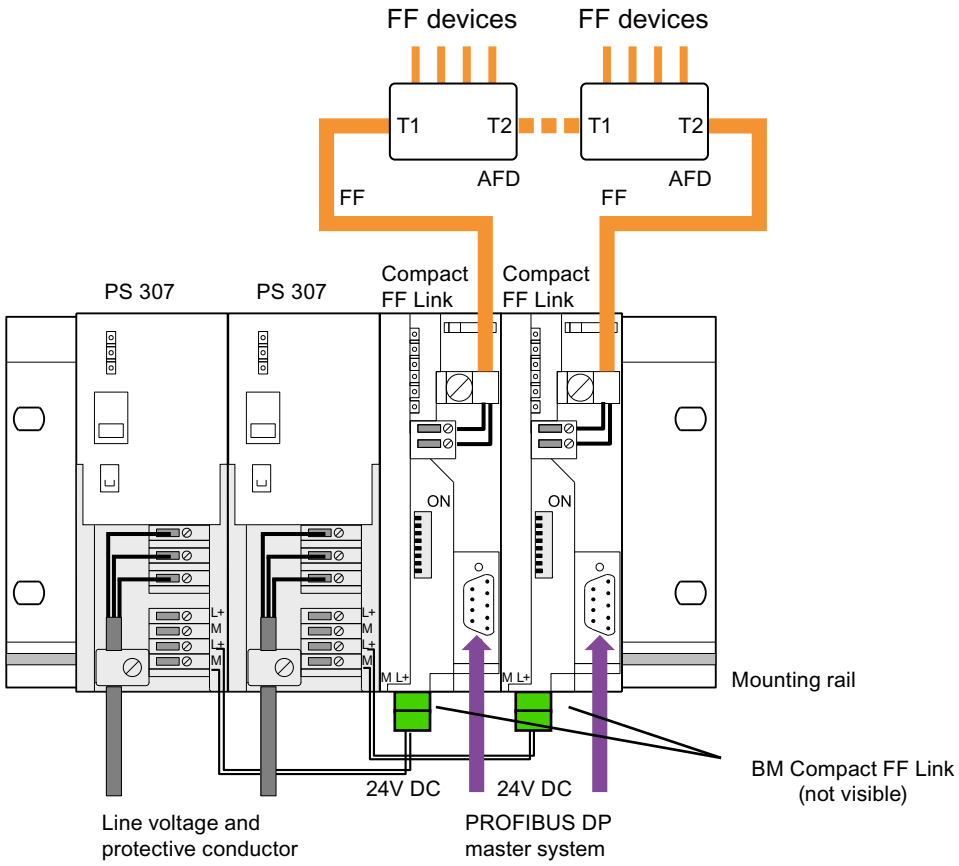

Figure 6-3 Connections for bus link with ring redundancy on the FF bus

"RING" DIP switch

If you want to activate ring redundancy, you must set the "RING" DIP switch to the "ON" position.

Note

Configuration

The ring redundancy must also be configured on the integrated fieldbus coupler. The position of the "RING" switch during operation must match the configuration of the integrated fieldbus coupler.

See also

Setting the PROFIBUS address and redundancy mode (Page 30)

Connecting the power supply (Page 37)

6.3.3 Wiring the FOUNDATION Fieldbus to the active field distributor

The information in this section is valid for the following active field distributors:

- Active Field Splitter
- Active Field Distributor

Reference

For more detailed information about the following topics, refer to Operating Instructions DP/PA coupler, Active Field Distributor, DP/PA Link, and Y Link:

- Connection to the active field distributor
- Wiring cables to the terminal block
- Terminal assignment of active field distributors
- Closing the field distributor

Due to the same physical conditions, the specifications made there for PROFIBUS PA also apply to FF.

6.4 Connecting the power supply

Tools required

You need a suitable screwdriver to wire the power supply

Power supply

Always use SELV power supplies with protective extra-low voltage and safe electrical isolation (max 28.8 V DC).

The capacity of the power supply used depends on the power consumption of the connected components.

Wiring the power supply

The 24 V DC incoming supply is located at the bottom of the module and is built with a two-pin male connector and a two-pin plug-in female connector. The female connector is inserted from below.

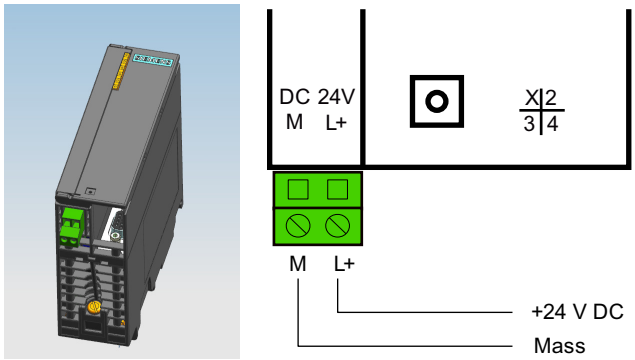

Figure 6-4 Power supply for Compact FF Link

The maximum conductor cross-section is 2.5 mm^2.

Note

Strain relief

A strain relief is not present for the power supply cables. During installation, you must ensure that a strain relief for the supply cables is guaranteed.

See also

Wiring the Compact FF Link for non-redundant mode (Page 34)

6.5 Connecting PROFIBUS DP on Compact FF Link

Tools required

You need a suitable screwdriver to fasten the bus connector to the Compact FF Link.

Bus cable and connector

Use only the specified accessories for PROFIBUS DP.

Procedure

Connect the PROFIBUS DP as follows:

1. Plug the bus connector into the PROFIBUS connection.
2. Tighten the fixing screws of the bus connector.

Additional information

All the information required for handling bus cables and connectors can be found in Manual ET 200 Distributed I/O System (http://support.automation.siemens.com/WW/view/en/1142470).

6.6 Connecting FOUNDATION Fieldbus on Compact FF Link

Important information

The following content is binding for installation of the FOUNDATION Fieldbus:

- FOUNDATION Fieldbus Application Guide, 31.25 Kbit/s Intrinsically Safe Systems, AG-163, Revision 2.0
- Wiring and Installation 31.25 Kbit/s, Voltage, Mode, Wire Medium, AG-140, Revision 1.0
- FOUNDATION Fieldbus System Engineering Guidelines, AG-181, Revision 2.0
  More information is available on the Internet at:
  `http://www.fieldbus.org`
- Installation regulations in accordance with IEC 60079-14 (Electrical equipment in potentially explosive atmospheres)

Tools required

You need a suitable screwdriver to wire the FOUNDATION Fieldbus.

Bus cable

See section Article numbers (Page 91).

FOUNDATION Fieldbus connection

The 2-pin screw terminal for the FOUNDATION Fieldbus connection is **located on the Compact FF Link behind the front door at the top** . The connections have the following meaning:

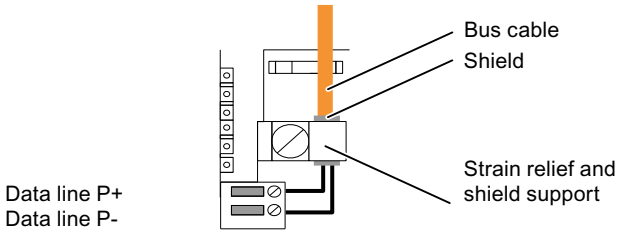

Bus termination for the FF segment when using active field distributors

When using active field distributors, the bus is terminated automatically at the last bus node (automatic bus termination).

Procedure

Connect the FOUNDATION Fieldbus as follows:

1. Strip the insulation from the bus cable as shown in the figure and push the protective braided shield back over the insulation.

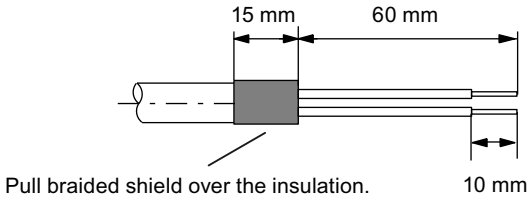

2. Clamp the protective braided shield of the bus cable under the strain relief and screw the stain relief into place.
3. Fasten the wires of the bus cable in the P+ and P- screw terminals. Make sure that you do not reverse the polarity of the wires (brown = plus, blue = minus).

Commissioning 7

7.1 Overview for commissioning the bus link

Requirements

The following requirements must be met before you commission the bus link:

- PCS 7 (STEP 7) and SIMATIC PDM with "SIMATIC PDM Communication FOUNDATION Fieldbus" option package are installed on the engineering system.
- You have completely installed and wired the bus link (1 or 2 Compact FF Links).
- You have completely installed PROFIBUS DP. PROFIBUS DP is ready for operation.
- You have connected the FF bus cable. FOUNDATION Fieldbus is ready for operation.
- You should wire a bus link with 2 Compact FF Links to 2 24 V power supplies.
  Observe the following section "Connecting the power supply (Page 37)".

Configuring the bus link

Configuring includes the configuration and parameter assignment of the bus link, the FOUNDATION Fieldbus, and the FF devices on the FF segment. To do this, you can use PCS 7 (STEP 7) and SIMATIC PDM.

Commissioning the bus link

1. Configure the bus link. For this, select the **IM 655-5 FF** module in the **PROFIBUS DP > FF Link** folder of the hardware catalog.
2. Set the PROFIBUS address of the Compact FF Link(s).
3. If you want to activate the ring redundancy, you must set the "RING" DIP switch to the "ON" position.
   You can find information on this in section "Setting the PROFIBUS address and redundancy mode (Page 30)".
4. Switch on the power supply for the bus link.
5. Download the configuration to the target system.

Note

Address on the FOUNDATION Fieldbus

When the Compact FF Link is used, the following addresses are set automatically.

- A Compact FF Link (not redundant): Address 16
- Two Compact FF Links (redundant): Addresses 16 and 17

Reference

You can find information about the individual configuring and commissioning steps in Commissioning Manual Process Control System PCS 7, FOUNDATION Fieldbus (http://www.siemens.com/pcs7-documentation).

Operation of the bus link

8

8.1 Startup/operation without CPU

Introduction

You can download the FF bus parameters and LAS data (scheduler) to the bus link and the FF devices using *HW Config* or *SIMATIC PDM*. The data is stored retentively there. Because the FF parameter assignment is stored retentively in the Compact FF Link and the FF devices, the FOUNDATION Fieldbus starts up automatically after Power ON.

Requirements

All FF devices are configured and the FF bus is switched on and controlled by the active Compact FF Link (with CiF, if applicable).

Startup scenarios without CPU

During startup without CPU, only acyclic communication with the FF devices is possible via *SIMATIC PDM* that is connected directly to PROFIBUS DP, e.g. for commissioning. The following cases are distinguished:

- FF bus parameters are missing
  - FOUNDATION Fieldbus starts up with default bus parameters
- FF bus parameters present, LAS data (scheduler) is missing
  - FOUNDATION Fieldbus starts up with the specified bus parameters
- FF bus parameters and LAS data (schedule) present
  - If the FF devices have not received their configuration, the FOUNDATION Fieldbus starts up with its cyclic communication. However, there is no process image update or communication among the FF devices.
  - If all FF devices have received their configuration, the FOUNDATION Fieldbus starts up with its cyclic communication. However, there is no process image update. Output data from the Compact FF Link is set to "0". CiF is functioning.

8.2 Startup with CPU

Startup characteristics

The following cases are distinguished:

- Once it is detected that all FF devices are available in accordance with the configuration, all output data is transferred and all input data is reported to the CPU.
- If at least one FF device does not correspond to the configuration (not available, or incorrect name), the startup delay is maintained. The I/O data is then enabled for all FF devices with error-free configuration (previously "0") and relevant interrupts (removal or diagnostic interrupt) are reported for incorrectly configured FF devices.
  You must set the startup delay according to the size of your system configuration in the properties dialog of Compact FF Link.

8.3 Behavior after certain events in the redundancy mode

Behavior of the Compact FF Link

The following table shows the response of Compact FF Link to specific events when operating in redundancy mode.

Table 8-1 Behavior following specific events in redundancy mode

Event	Reaction
Master to standby switchover with modified configuration	The bus link is switched bumplessly from the active Compact FF Link to the previously passive Compact FF Link.
Failure of a CPU	If this also leads to a failure of the active channel of the redundant DP master system: see failure of the active channel. Otherwise: see failure of the passive channel.
Failure of a Compact FF Link	A diagnostic message is generated in the system. If the active Compact FF Link fails, there is a bumpless switchover to the previously passive channel.
Failure of the active channel.	The bus link is switched bumplessly from the active Compact FF Link to the previously passive Compact FF Link. The failed channel is displayed on the associated Compact FF Link: • "**BF DP**" LED: Failure of the PROFIBUS channel. • "**BF FF**" LED: Failure of the FF channel.
Failure of the passive channel.	No effect on the bus link. A diagnostic message is generated in the system. The failed channel is displayed on the associated Compact FF Link: • "**BF DP**" LED: Failure of the PROFIBUS channel. • "**BF FF**" LED: Failure of the FF channel.

8.4 Startup behavior

Requirement for startup of the bus link

- A valid PROFIBUS address is set on the Compact FF Link.
- The DP master on the higher-level PROFIBUS DP is in operation.
- The bus link is correctly configured.

The further startup characteristics of the bus link depends on whether it is operating in non-redundant mode or redundant mode.

8.4.1 Startup behavior in non-redundant mode

Startup characteristics

The flow diagram below shows the startup behavior of the Compact FF Link after Power ON.

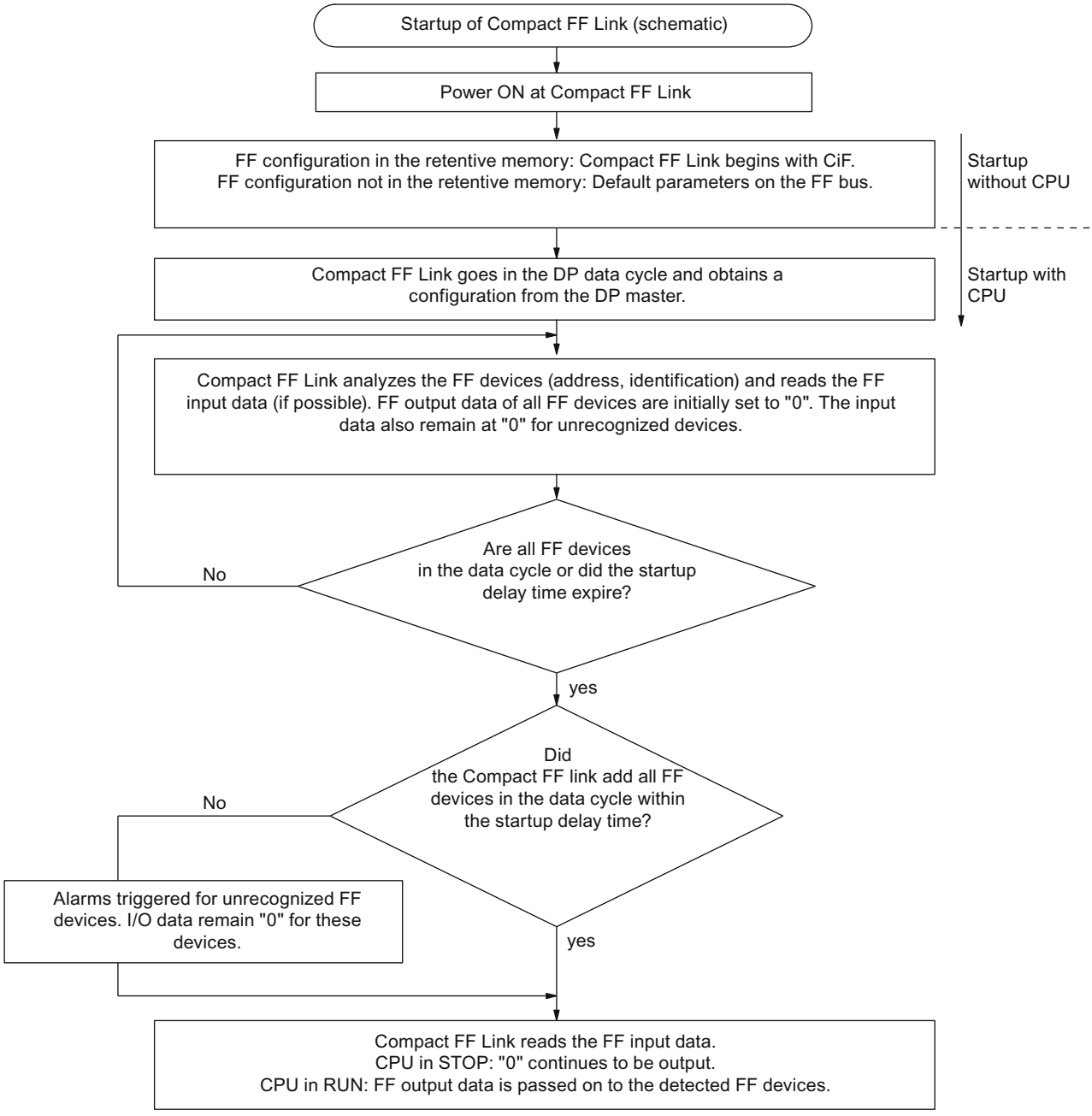

Figure 8-1 Startup behavior of Compact FF Link after Power ON

8.4.2 Startup behavior in redundant mode

Startup diagram of the bus link with 2 Compact FF Links on SIMATIC S7 41xH

The two Compact FF Links are addressed independently during startup:

- Each DP master configures and parameterizes its assigned Compact FF Link (independently of the other DP master) and sends the corresponding configuration.
- In fault-free operation, the Compact FF Link that is connected to the subsystem of the master CPU is activated.
- Once the partner DP master has also successfully completed the configuration, parameter assignment, and transfer of all configuration data to its Compact FF Link, the Compact FF Link is available as standby.
  The Compact FF Link on the subsystem of the standby CPU is passive. If the active Compact FF Link fails, it can continue processing of the FF devices.

The figure below provides a simplified overview of the mutually independent response of the two Compact FF Links.

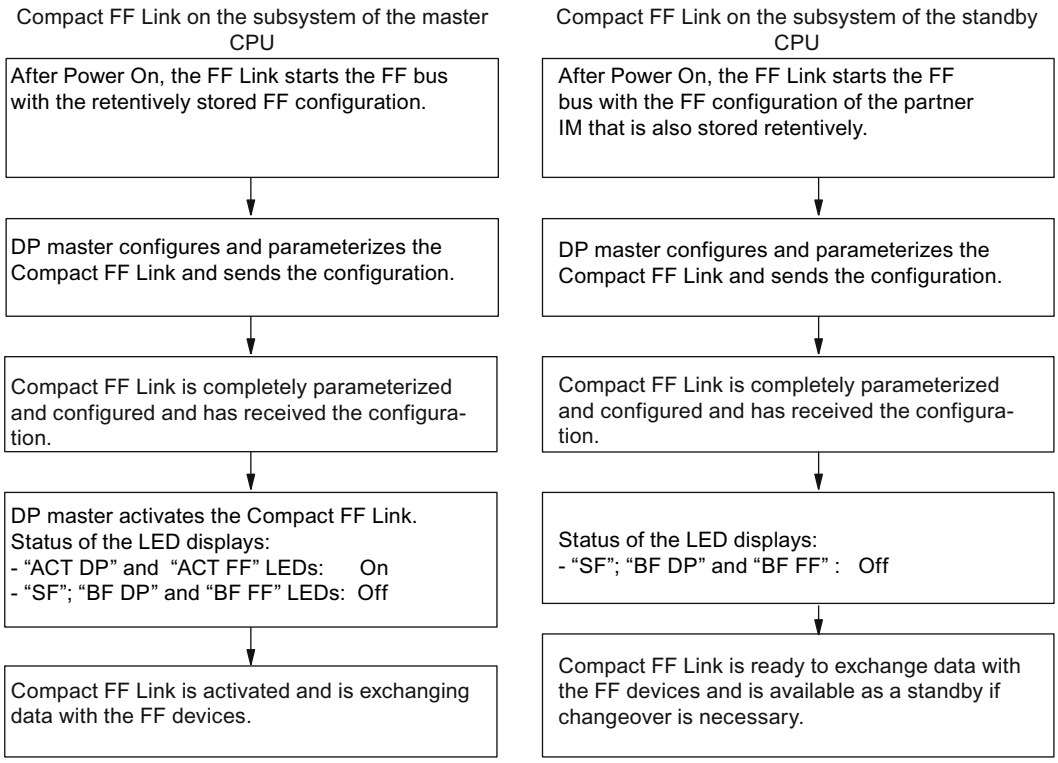

Figure 8-2 Startup characteristics of the two Compact FF Links in redundancy mode

8.5 Handling the quality code of cyclic data

Quality code of cyclic data

During startup, the Compact FF Link initializes the I/O data for FF devices with "0" internally. This action also sets the quality code to "Bad".

Once an FF device has been identified (correct name and address), its output data is transferred from the DP master to the FOUNDATION Fieldbus and the input data from the FF device to the DP master. (A special feature during the startup delay time is that the output data continues to be kept at "0".)

Upon failure of an FF device, the I/O data and the quality code will be deleted (= "0").

On failure of the higher-level DP master (e.g. transition from RUN to STOP, DP cable disconnected, CPU switched off), all output data and the quality code will be deleted (= "0").

During normal operation (CPU in RUN), the output data is transferred in a transparent operation.

In normal operation, the input data is adapted (alignment with the PROFIBUS PA definition):

- Quality codes 0x84 ... 0x87 are mapped to: 0x80 ... 0x83
- Quality codes 0x90 ... 0x93 are mapped to: 0x80 ... 0x83

Service and maintenance

9

9.1 Replacing a bus link

Replacing a faulty Compact FF Link

Perform the following steps to replace a faulty Compact FF Link.

1. Switch off the power supply for the faulty Compact FF Link.
2. Disconnect the faulty module from the power supply.
3. Pull the bus connector from the PROFIBUS DP interface of the faulty module.
4. Disconnect the FOUNDATION Fieldbus connection of the faulty module.
5. Replace the faulty module.
6. Set the PROFIBUS address of the new Compact FF Link.
7. If necessary, set the redundancy mode.
8. Plug the bus connector into the PROFIBUS DP interface of the new module.
9. Connect the FOUNDATION Fieldbus to the new Compact FF Link.
10. Connect the power supply to the new Compact FF Link.

Note

Replacing a Compact FF Link

The pulling and plugging of a Compact FF Link is only permitted in de-energized state. The 24 V DC power supply of the Compact FF Link must be switched off for this purpose.

When a single-channel Compact FF Link is being replaced, the FF segment is not available. Downloading to the FF devices is not required in the case of CiF.

You can find additional information on this in section Control in the Field (CiF) (Page 56).

Using a previously used Compact FF Link

To use a Compact FF Link that was previously used in another system, you must first restore it to its factory settings.

You can find additional information on this in section Restoring a Compact FF Link FF to the factory state (Page 51).

For redundant mode of the Compact FF Link

In the case of a redundantly configured bus link, it is possible to replace one of the Compact FF Links during operation. The FF devices that are connected to the bus link remain in operation.

To prevent the lower-level FF segment from becoming inoperative, the Compact FF Links should be configured with independent switchable voltage supplies (e.g. by using two power supply modules).

In redundancy mode, it is not necessary to load parameters to the new Compact FF Link if the other Compact FF Link is still running.

Note

If you want to replace the active Compact FF Link ("ACT FF" or "ACT DP" LED On), the following displays must not be activated on the passive Compact FF Link:

- **"SF" LED is flashing at 0.5 Hz**
- **"BF FF" LED is lit or flashing**
- **"BF DP" LED is lit or flashing** (This display indicates that the communication to the PROFIBUS DP is disrupted).

Have you replaced an active Compact FF Link?	
LEDs "ACT FF" or "ACT DP" on	**LEDs "ACT FF" or "ACT DP" off**
The data traffic was switched over in the redundant bus link to the other Compact FF Link. This maintains the data traffic to its DP master.	No change to data traffic: The active Compact FF Link has maintained the data traffic to its DP master.

You can find additional information on this in section Firmware update of the Compact FF Link (Page 50).

9.2 Replacing active field distributors

Before replacing an active field field distributor, always observe the information in Operating Instructions *DP/PA Coupler, Active Field Distributors, DP/PA Link and Y Link*.

9.3 Firmware update of the Compact FF Link

The firmware update is a standard mechanism in *STEP 7*. A firmware update is used to update the internal main program (firmware) for a device.

When do you perform the firmware update?

After functional upgrades or troubleshooting, you should transfer the latest firmware version in each case to the device (perform firmware update)

Note

Redundant components

For redundant components, perform the firmware update in such a way that both Compact FF Links are operated with the same firmware version in process mode.

Observe this for the bus link with two Compact FF Links, in particular, when you replace one of the Compact FF Links.

Reference

Instructions and the relevant firmware updates can be found at Internet (http://support.automation.siemens.com/WW/view/en/10806836/133100). Select "Download" as the entry type for the search and "FF Link" as the search term.

See also

Service & Support (http://www.siemens.com/automation/service&support)

9.4 Restoring a Compact FF Link FF to the factory state

Information on the operating states of the Compact FF Link indicated with the LED displays can be found in section LEDs of the Compact FF Link (Page 59).

Procedure

Proceed as follows to restore a Compact FF Link to its factory settings:

1. Set up a connection from *SIMATIC PDM* to the bus link.
2. Select the **Restore default state** menu command.

The parameters stored in the Compact FF Link flash memory are deleted and the cyclic FF communication is stopped. On redundant stations, both Compact FF Links are reset.

OR

1. Switch off the power supply for the Compact FF Link.
2. Set the PROFIBUS address "0".
3. Switch on the power supply for the Compact FF Link.
   The Compact FF Link is restored to it factory settings.
4. Switch off the power supply.

5. Set the correct PROFIBUS address.
6. Switch on the power supply.
   The Compact FF Link is operational again.

9.5 Maintenance

Maintenance

The following components do not require any periodic maintenance:

- Power supply (provided that PS 307 is used)
- Compact FF Link
- Active field distributors

Functions 10

10.1 Redundancy with Compact FF Link

Usage

You can operate the bus link on a SIMATIC S7-400H redundantly (e.g. on CPU 410-5H).

Requirements

- Installation on BM Compact FF Link (active bus module for Compact FF Link)
  The bus module enables a fast switchover, when needed, thanks to the active communication between the two Compact FF Links.
- Mutually redundant components are identical in terms of hardware and firmware.
- 2 x Compact FF Links on BM Compact FF Link
  The installation rules for the bus module and the Compact FF Links can be found in section "Mounting (Page 25)".
- In redundancy mode, the same PROFIBUS address must be set for both Compact FF Links.
- Connect the left Compact FF Link to the S7-400H via the DP master system that is connected to the left CPU or Rack 0.
  Connect the right Compact FF Link to the S7-400H via the DP master system that is connected to the right CPU or Rack 1.

Note

The SYNC/FREEZE function must not be activated during redundancy mode.

Note

Configuration

With redundant components, the following must be identical for the respective partner component:

- Hardware version
- Firmware version

You can find additional information on this in the section "System modification during operation (Page 55)".

S7-400H as DP Master

DP master 1 and DP master 2:

- The DP master execute the same user program.
- The DP masters have the same parameter assignment and configuration for the Compact FF Link.

Power supply

You can find information on the power supply of a bus link in redundancy mode with 2 x Compact FF Links in section "Connecting the power supply (Page 37)".

Additional information

- You can find information about article numbers in section Preface (Page 7).
- You can find information on upgrading in redundant operation in section "System modification during operation (Page 55)"

10.2 Identification and maintenance data (I&M data)

Definition and features

Identification and maintenance data (I&M) is information stored in a module to support you in

- Checking the system configuration
- Locating hardware modifications of a system
- Correcting errors in a system

Identification data (I-data) is information about the module, such as the article number and serial number, some of which is labeled on the module enclosure. I-data is manufacturer information about the module and can be read only.

Maintenance data (M-data) is system-related information, such as the installation location and installation date. M-data is created during configuration and written to the module where it is saved retentively.

Modules can be uniquely identified online by means of the I&M data.

This data is available on the Compact FF Link.

Reading and writing the I&M data

The I&M data is displayed in *PCS 7* in the "Module status – Compact FF Link" and "Properties - DP slave" tabs (see online help for *STEP 7*).

The M-data of modules can be entered in *HW Config* (for example in a dialog box during configuration).

The I&M data are accessed in accordance with the IEC 61158-6 standard.

The interface module from which the I&M data is to be read must be accessible online.

10.3 System modification during operation

Adding a bus link with Compact FF Link

Perform the following steps in order to add a bus link and lower-level FF segment to an existing system during operation.

1. Install the new bus link.
2. Connect the voltage supply of all modules,
3. Establish the PROFIBUS connection:
   - In non-redundant operation:
     Connect the Compact FF Link to the DP master system that is connected to the CPU of the S7-400H.
   - In redundant operation:
     Connect the left Compact FF Link to the S7-400H via the DP master system that is connected to the left CPU or Rack 0.
     Connect the right Compact FF Link to the S7-400H via the DP master system that is connected to the right CPU or Rack 1.

Information regarding the complete procedure for a system modification and related requirements can be found in the following documentation:

- Modifying the system during operation via CiR (http://support.automation.siemens.com/WW/view/en/14044916)
- Firmware update of the Compact FF Link (Page 50)
- S7-400H Fault-Tolerant Systems (http://support.automation.siemens.com/WW/view/en/1186523), section *System modification during operation*, step "Modification of hardware".

To use a Compact FF Link that has been previously used in another system, you must first restore it to its factory settings.
Information regarding this can be found in section "Restoring a Compact FF Link FF to the factory state (Page 51)".

Adding an FF device

Information on adding a new FF device to an existing system during operation can be found in the following documentation:

- Section "Connecting (Page 33)"
- Operating Instructions DP/PA coupler, Active Field Distributor, DP/PA Link, and Y Link (http://support.automation.siemens.com/WW/view/en/1142696).

Information on configuring can be found in the following documentation:

- Process Control System PCS 7, FOUNDATION Fieldbus (http://www.siemens.com/pcs7-documentation) Commissioning Manual.

Upgrading a redundant Compact FF Link

Note

Current information

- Unless specified otherwise, temporary differences are acceptable for the following during an upgrade:
  - Hardware version
  - Firmware version
- It is not possible in every case to skip upgrades or perform them without intermediate steps.

Please make sure to observe the current product information and notes on updates on the Internet.

Using a previously used FF device

To use an FF device that has been previously used in another system, you must first restore it to its factory settings.
Information regarding this can be found in Operating Manual *Process Control System PCS 7, SIMATIC PDM*.

Additional information

- Section "Replacing a bus link (Page 49)"
- Section "Replacing active field distributors (Page 50)"

10.4 Control in the Field (CiF)

Control in the Field (CiF)

The "Control in the Field" (CiF) FF function enables you to control the input and output blocks between the FF devices on an FF segment without CPU intervention, thus without transfer to the process image. Control loops are also possible. The CiF functionality runs as long as the power supply of the FF segment is guaranteed and at least one FF Link Master on the FF segment is active. There are FF devices that can operate as an FF Link Master on the FF segment.

CiF in PCS 7

When the Compact FF Link is used, it is always the FF Link Master. If CiF is used on the FF segment, the active Compact FF Link, as the LAS, assumes the control of the data transmission. No communication with the H-system is needed for the CiF function. The DP master system can be disconnected from the bus link without disturbing the CiF function.
After Power Off/On of the Compact FF Link, the CiF function is resumed because the schedule is retentive (see section Startup behavior in non-redundant mode (Page 46)).

Reference

For more information about "Control in the Field", refer to Commissioning Manual Process Control System PCS 7, FOUNDATION Fieldbus (http://www.siemens.cm/pcs7-documentation).

Alarm, error, and system messages 11

11.1 Diagnostics using LEDs

11.1.1 LEDs of the Compact FF Link

Tables for the status and error messages of the Compact FF Link can be found in the following:

- Status and error messages of the Compact FF Link (not redundant)
- Status and error messages of the redundant Compact FF Link

Status and error messages of the Compact FF Link

SF	Group error (red)
BF FF	Bus error on lower-level FF segment (red)
ACT FF	Active FF segment / active channel (yellow)
BF DP	Bus error on higher-level PROFIBUS DP (red)
ACT DP	Active PROFIBUS DP link (yellow)
ON	24 V power supply FF system (green)

Key for the following tables:

Off	LED not lit
On	LED lit
*	Any status
Flashes slowly	Continually changing status (0.2 Hz)
Flashes	Continually changing status (0.5 Hz)
Flashes rapidly	Continually changing status (2.0 Hz)

Status and error messages of the Compact FF Link (not redundant)

LEDs						Meaning	Solution
SF	**BF FF**	**ACT FF**	**BF DP**	**ACT DP**	**On**		
Off	Off	Off	Off	Off	Off	• No voltage is applied to the Compact FF Link. • Applied supply voltage is not within permissible range. • Hardware fault of the Compact FF Link.	• Switch on the power supply module. • Check the voltage applied • Replace the Compact FF Link.
Off	Off	Off	Off	Off	**On**	**Single Mode Compact FF Link (Good status)** The Compact FF Link is exchanging data with the DP master and the lower-level FF devices.	
On	**On**	**On**	**On**	**On**	**On**	**Compact FF Link is starting up.** All LEDs are switched on for approx. 1 s.	
On	**Flashes**	Off	Off	*	**On**	**After startup:** Compact FF Link is operating. Status after startup. The Physical Device (PD) tag has been changed for an FF device on the FF segment. At least one FF device has an incorrect Physical Device (PD) tag. **After restoration of factory settings:** The Compact FF Link is connected to the DP master via the DP cable.	Evaluate the diagnostics of the Compact FF Link and check the reported FF devices.
On	Off	Off	**On**	Off	Off	**At restoration of factory settings:** This only occurs when the PROFIBUS address (DIP switch) is "0" at Power ON. Temporary state while the default FF configuration data is being restored in the retentive memory. When startup is complete, the "BF DP" LED flashes (slowly).	
*	*	Off	**Flashes**	Off	**On**	**After startup:** The Compact FF Link has no active communication with the DP Master. Temporary status when the Compact FF Link has no connection to the DP master.	• Check the PROFIBUS address. • Check whether the correct project is loaded in the CPU.
*	*	Off	**On**	Off	*	The Compact FF Link has no connection to a DP Master. Final status when the Compact FF Link has no connection to the DP master.	
*	*	Off	*	Off	**Flashes slowly**	The FF segment is overloaded (flashing frequency of 0.2 Hz).	Check the number of connected FF devices and their total current.

LEDs						Meaning	Solution
SF	**BF FF**	**ACT FF**	**BF DP**	**ACT DP**	**On**		
Off	**Flashes rapidly**	Off	Off	Off	**On**	**Startup:** The Compact FF Link is starting up (see section "Startup behavior (Page 45)"). Loading of DP parameters complete.	
Off	**Flashes**	Off	*	Off	**On**	Loading of DP parameters not complete. No data exchange between PROFIBUS and FF segment. FF segment runs independently of PROFIBUS. The schedule has been downloaded. CiF runs with the most recently downloaded FF configuration.	
Off	**On**	Off	*	Off	**On**	Loading of DP parameters not complete. No data exchange between PROFIBUS and FF segment. FF segment runs with default bus parameters. **After restoration of factory settings:** DP cable is not connected.	
On	Off	Off	Off	Off	**On**	**After startup:** Impermissible PROFIBUS address	Check the PROFIBUS address set at the DIP switch. See section "Setting the PROFIBUS address and redundancy mode (Page 30)".
						The Compact FF Link is communicating with the DP master and the FF devices. • FF devices are exchanging data. At least one FF device has an incorrect Physical Device (PD) tag. • A diagnostic message is available.	Evaluate the diagnostics of the Compact FF Link and check the reported FF devices.
						The settings that are downloaded to the integrated field device coupler of the Compact FF Link do not match the hardware configuration	Check the position of the "RING" DIP switch. Check the configuration of the integrated field device coupler in the project.

Status and error messages of the redundant Compact FF Link

LEDs						Meaning	Solution
SF	BF FF	ACT FF	BF DP	ACT DP	On		
Off	Off	**On**	Off	**On**	**On**	**Redundancy: Active channel (Good status)** The Compact FF Link is exchanging data between the DP master and the lower-level FF devices.	
Off	Off	Off	Off	Off	**On**	**Redundancy: Passive channel (Good status)** The Compact FF Link is a passive channel of the redundant Compact FF Link and is ready to assume the active channel.	
Off	Off	Off	Off	Off	Off	• No voltage is applied to the Compact FF Link. • Applied supply voltage is not within permissible range. • Hardware fault of the Compact FF Link.	• Switch on the power supply module. • Check the voltage applied • Replace the Compact FF Link.
On	**On**	**On**	**On**	**On**	**On**	All LEDs are switched on for approx. 1 s. **Compact FF Link is starting up.**	
*	*	**On**	*	*	**On**	**Active channel** The Compact FF Link takes over the power supply for the FF segment.	
*	*	*	**On**	Off	*	The Compact FF Link has no connection to a DP Master. No connection to the DP Master.	
On	Off	Off	**On**	Off	Off	**After startup and at restoration of factory settings:** This only occurs when the PROFIBUS address (DIP switch) is "0" at Power ON. Temporary state while the default FF configuration data is being restored in the retentive memory. When startup is complete, the "BF DP" LED flashes (slowly).	
*	*	*	*	*	**Flashes slowly**	The FF segment is overloaded (flashing frequency of 0.2 Hz).	Check the number of connected FF devices and their total current.
*	*	*	**Flashes**	*	**On**	**After startup:** The Compact FF Link has no active communication with the DP master. Temporary status when the Compact FF Link has no connection to the DP master.	• Check the PROFIBUS address. • Check whether the correct project is loaded in the CPU.

LEDs						Meaning	Solution
SF	**BF FF**	**ACT FF**	**BF DP**	**ACT DP**	**On**		
Off	**Flashes rapidly**	*	Off	*	**On**	**After startup:** The Compact FF Link is starting up (see section "Startup behavior (Page 45)"). Downloading of DP parameters is complete.	
Off	**Flashes**	*	*	*	**On**	Loading of DP parameters is not complete; therefore no data exchange between DP and FF end. FF segment runs independently of PROFIBUS. The schedule has been downloaded. CiF runs with the most recently downloaded FF configuration.	
Off	**On**	*	*	*	**On**	Loading of DP parameters is not complete; therefore no data exchange between DP and FF end. FF segment operates with default bus parameters. **After restoration of factory settings:** DP cable is not connected.	
On	**Flashes**	*	Off	*	**On**	**After startup:** Compact FF Link is operating. There is a connection to PROFIBUS. At least one FF device is not available at the FF segment or is not configured (e.g. with factory settings).	Evaluate the diagnostics of the Compact FF Link and check the reported FF devices.
On	Off	*	Off	Off	**On**	**After startup:** Impermissible PROFIBUS address (address range 1-125)	Check the PROFIBUS address set at the DIP switch. See section "Setting the PROFIBUS address and redundancy mode (Page 30)".
						Redundancy: Passive channel The Compact FF Link is a passive channel of the redundant Compact FF Link and is ready to assume the active channel. At least one FF device has an incorrect Physical Device (PD) tag.	Evaluate the diagnostics of the Compact FF Link and check the reported FF devices.
						The settings that are downloaded to the integrated field device coupler of the Compact FF Link do not match the hardware configuration	Check the position of the "RING" DIP switch. Check the configuration of the integrated field device coupler in the project.
						There is a problem on the FF segment (wire break, short circuit)	Check the wiring of the FF segment.

LEDs						Meaning	Solution
SF	BF FF	ACT FF	BF DP	ACT DP	On		
On	Off	*	Off	**On**	**On**	**Redundancy: Active channel** The Compact FF Link is communicating with the DP master and the FF devices. • FF devices are exchanging data. At least one FF device has an incorrect Physical Device (PD) tag. • A diagnostic message is available.	Evaluate the diagnostics of the Compact FF Link and check the reported FF devices.
						The settings that are downloaded to the integrated field device coupler of the Compact FF Link do not match the hardware configuration	Check the position of the "RING" DIP switch of both Compact FF Links. Check the configuration of the integrated field device coupler in the project.
						There is a problem on the FF segment (wire break, short circuit)	Check the wiring of the FF segment between both Compact FF Links.

11.1.2 LEDs of the active field distributors

Status and error messages from the active field distributors

For more information on the status and error messages of the active field distributors, refer to the DP/PA Coupler, Active Field Distributors, DP/PA Link, and Y Link operating instructions.

11.2 Diagnostics of the Compact FF Link

Bus address, diagnostic address, and slot

Bus address
You can operate a maximum of 31 FF devices on a FOUNDATION Fieldbus. You assign a bus address to each FF device on the FOUNDATION Fieldbus. Additional information can be found in Commissioning Manual Process Control System PCS 7, FOUNDATION Fieldbus (http://www.siemens.com/pcs7-documentation).

Diagnostic address
The diagnostic address of the Compact FF Link is assigned automatically in PCS 7. You can find the diagnostic address on the "General" tab in the object properties in HW Config.

Slot (virtual)
PCS 7 assigns a virtual slot for diagnostic communication to each object present on the FOUNDATION Fieldbus. Some slots are assigned automatically. Since you can operate a maximum of 31 FF devices on a FOUNDATION Fieldbus, the FF devices occupy a maximum of 31

slots. The assignment of the virtual slots for diagnostic communication when using the Compact FF Link is as follows:

- **Slot 0**
  The Compact FF Link occupies slot 0. This also applies in redundant operation with 2 Compact FF Links (IM 655-5 FF).
- **Slot 1**
  Slot 1 is needed for the transmitting of Compact FF Link-specific messages, such as in the event of a CiR conflict.
- **Slots 2 and 3**
  Slots 2 and 3 are needed for diagnostic communication of the internal field device coupler(s):
  - For operation without ring redundancy/coupler redundancy:
    - Slot 2 = Field device coupler in the Compact FF Link
  - For operation with ring redundancy/coupler redundancy:
    - Slot 2 = Field device coupler in the left FF Link
    - Slot 3 = Field device coupler in the right Compact FF Link
- **Slots 4-34**
  The first FF device is always assigned to virtual slot 4 (even in non-redundant mode). The other slots are determined by the number of configured FF devices.

Slave diagnostics of the Compact FF Link

Slave diagnostics behaves in accordance with IEC 61784-1 CP 3/1. Depending on the DP master, this data can be read using *STEP 7*, *SIMATIC PDM* or any other configuration tool.

Compact FF Link supplies the diagnostics for itself and the FF devices, as well as the following errors:

- Discrepancies with the configuration of the Compact FF Link
- External errors such as short circuit or wire break on the FF connection side of the Compact FF Link or discrepancy between configured and set redundancy mode (DIP switch)

If the Compact FF Link fails, the CPU sets the quality code for all FF devices to "Bad" in the process image.

Note

If diagnostics of the Compact FF Link **and** FF devices are available, you should first evaluate the diagnostic messages of the Compact FF Link and remedy the fault.

Diagnostics of the FF devices

The Compact FF Link can detect the following errors for each FF device:

- FF device not available (address not found)
- Name ("Physical Device (PD) Tag") does not match address (configuration error).

These errors are reported by the Compact FF Link in its diagnostics. If an FF device fails, the quality code of the FF device is set to "Bad" in the input data by the Compact FF Link.

Diagnostic frame

In the above diagnostic events, relevant IDs are set in the DP diagnostic frame in the identifier-related and module-specific ranges. In addition, swapping and diagnostic interrupts are triggered. Details can be found in the following sections.

Further preparation of the diagnostics data is handled by means of the *PCS 7* "Advanced Process Library" (APL) in the CPU. One module block per channel checks the quality code of the channel and issues an interrupt if necessary.

You can read additional diagnostics data from the FF device using the diagnostic page of the faceplate on the *PCS 7* Maintenance Station.

Note

The diagnostics data of the FF devices can only be read using the Maintenance Station or *SIMATIC PDM*.

If a new configuration is not compatible with the FF device version, the FF-device recognizes neither the Compact FF Link nor the CPU. An active check is possible with *SIMATIC PDM*.

Additional information

For additional information, please refer to the *STEP 7* online help topic "How to diagnose hardware"

For more information on reading out diagnostics information, refer to the Programming with STEP 7 (http://support.automation.siemens.com/WW/view/en/18652056) manual.

See also

Structure of slave diagnostics (Page 66)

Reading out diagnostics from FF devices (Page 77)

Interrupts (Page 75)

11.2.1 Structure of slave diagnostics

Influencing factors

The structure of the slave diagnostics depends on whether the Compact FF Link is working in S7 standard mode or redundancy mode on an S7-400H.

Diagnostic blocks in S7 standard mode and in the redundancy mode

The table below shows the lengths of the diagnostics blocks and their offset in the diagnostics frame.

Table 11-1 Length and offset of the diagnostic blocks in S7 standard mode and in redundancy mode

Diagnostic block	Length in bytes	Offset in the non-redundancy mode	Offset in the redundancy mode
Default diagnostics	6	0	0
Identifier-related diagnostics	6	6	6
Module status	13	12	12
Status message	38	25	25
H status	8	-	63
Interrupt section	(max. 63 *)	(63 *)	(71 *)
Total length		63 (max. 126 *)	71 (max. 134 *)
* only if interrupts are reported			

11.2.2 Structure of the diagnostic blocks

11.2.2.1 Default diagnosis

Format of the default diagnostics

The default diagnostics consists of 6 bytes and is subdivided as follows:

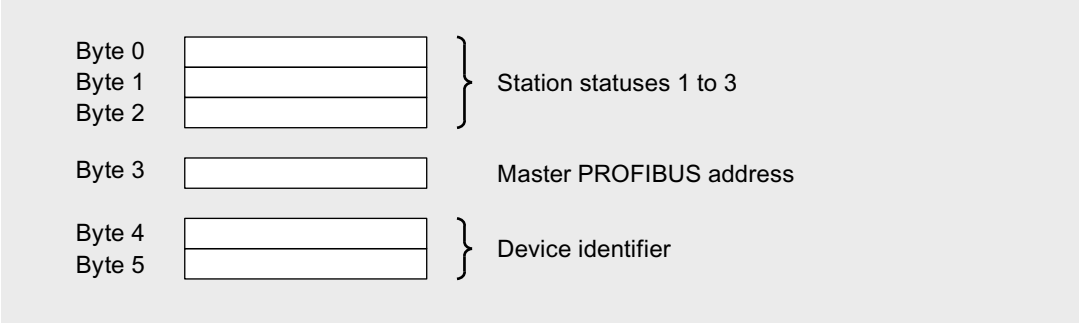

Figure 11-1 Format of the default diagnostics

Station statuses 1 to 3

Station status 1 to 3 provides an overview of the state of the Compact FF Link FF.

Table 11-2 Format of station status 1

Bit	Meaning	Cause / remedy
0	1: The Compact FF Link FF cannot be addressed by the DP master.	• Is the correct PROFIBUS address set on the Compact FF Link? • Is the bus connector plugged in? • Voltage on the Compact FF Link?
1	1: The Compact FF Link FF is not yet ready for data exchange.	• Wait, because Compact FF Link is currently starting up.
2	1: The configuration data sent by the DP master to the Compact FF Link do not correspond with the setup of the Compact FF Link, or are not correct in terms of syntax or max. supported quantity framework.	• Have you entered the right station type or right Compact FF Link FF structure into the configuration software?
3	1: External diagnostics available. (Group diagnostic display)	• Evaluate the ID-specific diagnostics, the module status, and any reported interrupts. As soon as all errors have been eliminated, bit 3 is reset. The bit is set again when there is a new diagnostic message in the bytes of the aforementioned diagnostics.
4	1: The requested function is not supported by the Compact FF Link.	• Check the configuration.
5	1: The DP master cannot interpret the response of the Compact FF Link.	• Check the bus configuration.
6	1: The station type configured does not correspond to the Compact FF Link FF.	• Correct station type entered in the configuration software for this DP address?
7	1: The Compact FF Link FF was configured by a different DP master (not by the DP master that has access to the Compact FF Link FF at the moment).	• Bit is always set to "1" when you are accessing the Compact FF Link FF using a PG or a different DP master. The PROFIBUS address of the DP master that configured the Compact FF Link FF is to be found in the "Master PROFIBUS address" diagnostic byte.

Table 11-3 Format of station status 2

Bit	Meaning
0	1: The Compact FF Link FF must be configured again.
1	0: The bit is always set to "0."
2	1: The bit is always set to "1" if the Compact FF Link FF with this PROFIBUS address is present.
3	1: The response monitor is enabled for Compact FF Link FF.
4	0: The bit is always set to "0."
5	0: The bit is always set to "0."
6	0: The bit is always set to "0."
7	1: The Compact FF Link FF is disabled; this means that it is not involved in current processing.

Table 11-4 Format of station status 3

Bit	Meaning
0 to 7	0: Bits are always set to "0".

Master PROFIBUS address

The PROFIBUS address of the specific DP master that configured the Compact FF Link FF and that has reading and writing access to the Compact FF Link FF is stored in byte 3 of the default diagnostics.

Device identifier

The device identifier is a code that uniquely identifies the DP slave (PROFIBUS ID number).

Table 11-5 Format of the device identifier

Byte 4	Byte 5	Designation
81	B8	Compact FF Link

11.2.2.2 Identifier-related diagnostics

Definition

The identifier-related diagnostics specifies the slots of the bus link for which diagnostics data is available.

Definitions of slave, module, and slot

A slave is a bus node that is addressed using its own bus address. It can consist physically or logically of one or more modules. The slaves and their modules are mapped onto virtual slots in the identifier-related diagnostics.

- A non-modular slave always occupies two slots.
  The first slot represents a "virtual head module" and the second a "virtual module".
- A modular slave consisting of x modules occupies (x+1) slots.
  The first three slots are assigned to the bus link. The following slots are assigned to the individual modules in ascending order.
- The field device couplers in the following figure are virtual modules integrated in the Compact FF Link.

Example of slot assignment

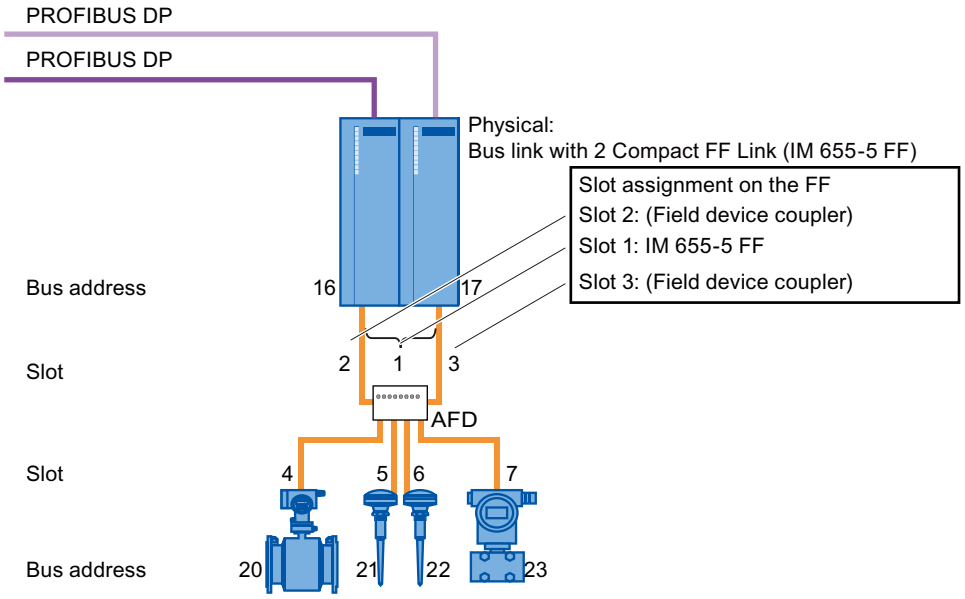

Figure 11-2 Example of slot assignment

Format of the identifier-related diagnostics

The identifier-related diagnostics comprises 6 bytes.

The Compact FF Link and each FF device occupy one bit. The FF devices are arranged in ascending order according to their FF addresses.

One bit is set:

- If the Compact FF Link has received non-matching DP and FF configuration data

Note

This state can occur temporarily with CiR processes. It is only necessary to take steps if the error persists.

- If the Compact FF Link is not present or is faulty, the Compact FF Link setup does not correspond to the configuration (redundant/non-redundant) or the DIP switch setting of the redundancy mode does not correspond to the configuration
- If the associated FF device is not available or with regard to configuration has an FF address that does not match its "Physical Device (PD) Tag".

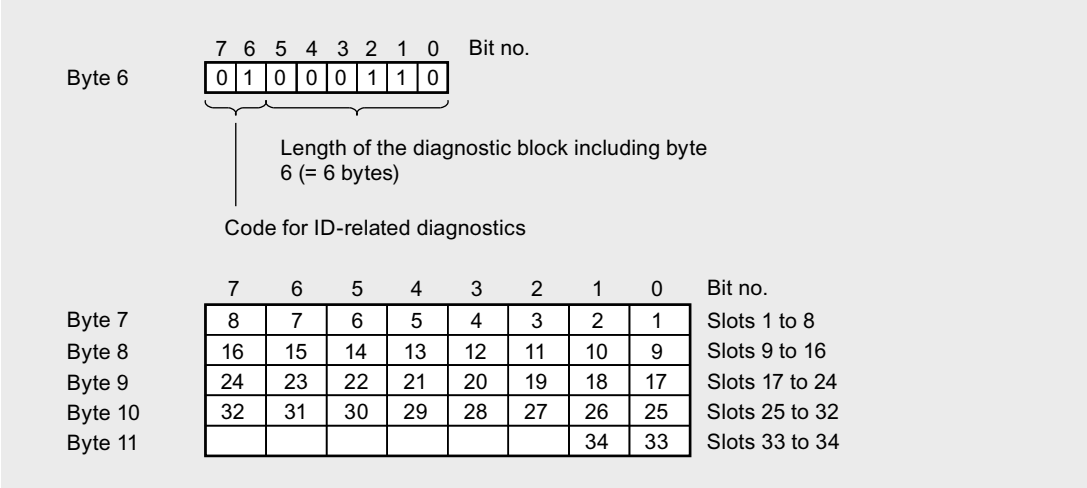

Figure 11-3 Format of the identifier-related diagnostics

11.2.2.3 Module status

Definition

The module status is part of the device-related diagnostics and reports the status of the configured Bus FF Link and FF devices.

Format of the module status

The modules status comprises 13 bytes.

In S7 standard operation and redundancy mode, the start address is equal to 12.

The status of each slot is coded by 2 bits in the module status.

The following applies to the entry in the module status:

- For the Compact FF Link:
  - 00_B: Compact FF Link is OK
  - 01_B: External error, PROFIBUS address differs from the one used at startup; the redundant Compact FF Link has a different PROFIBUS address
  - 10_B: Configuration error (e.g. DP-side configuration and retentive FF-side configuration present in Compact FF Link do not match)
  - 11_B**:** External error, short circuit or wire break, loss of redundancy when using ring redundancy
- For the field device coupler integrated in the Compact FF Link:
  - 00_B: Integrated field device coupler is OK
  - 01_B: External error, short circuit or wire break, loss of redundancy when ring redundancy is used or incorrect setting of the "RING" DIP switch.
  - 10_B: Configuration does not match the determined configuration
  - 11_B: Data of the integrated field device coupler is invalid (because a connection to the coupler was not established) or the redundant partner in the case of redundant Compact FF Link was not found (integrated field device coupler).
- For FF devices, the status is entered as follows:
  - 00_B: Module OK; valid user data
  - 10_B: Incorrect PD Tag; user data I/O invalid
  - 11_B: No module; user data I/O invalid.

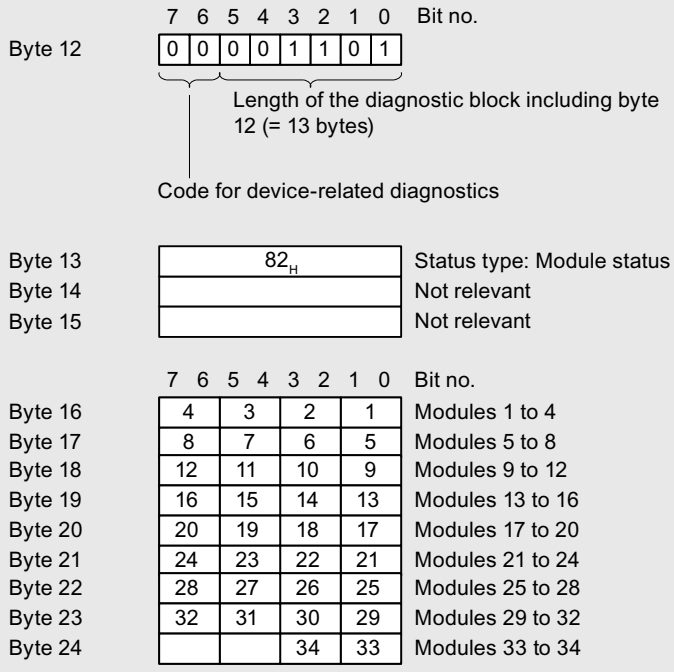

Figure 11-4 Format of the module status

11.2.2.4 Status message

Definition

The status message is part of the device-related diagnostics and supplies the assignment of slots to the configured FF device addresses. As soon as the configuration information is available in the Compact FF Link, and the Compact FF Link switches to data exchange, the data is updated. If Compact FF Link stops data exchange, the information is retained and is only updated with new configuration information. For non-configured slots, the FF device address 0 is given.

Format of the status message

The status message comprises 38 bytes.

In S7 standard operation and redundancy mode, the start address is equal to 25.

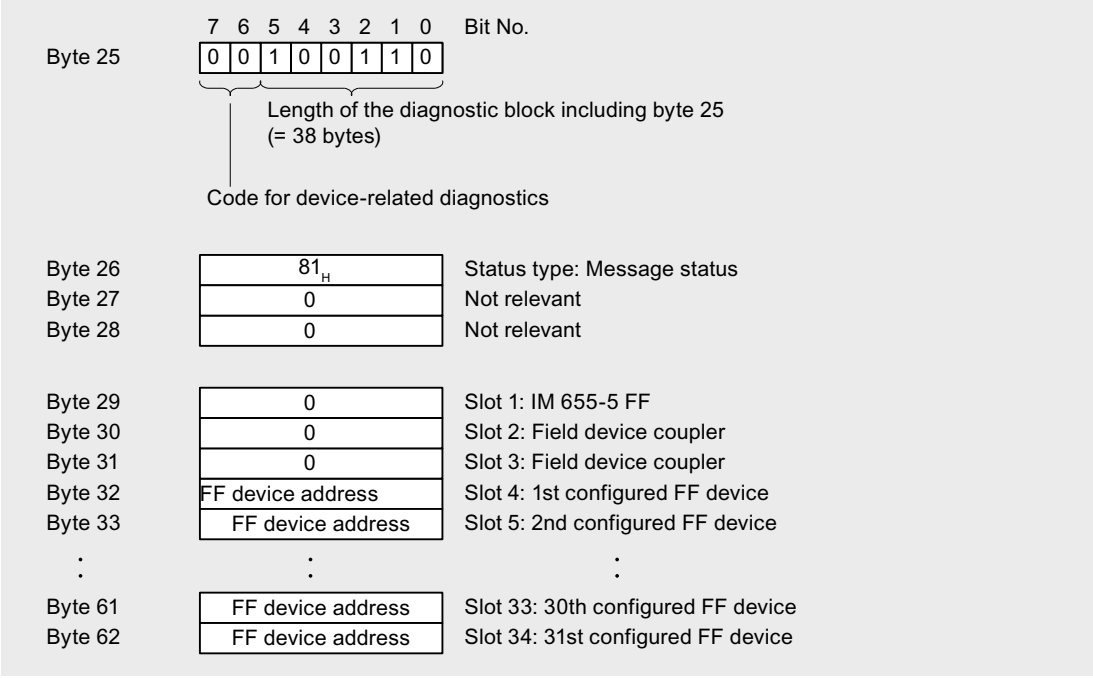

Figure 11-5 Format of the status message

11.2.2.5 H status

Definition

If inserted in a BM Compact FF Link, the Compact FF Link returns the H status.

The H status provides information about the status of active and passive Compact FF Links. The H status consists of 8 bytes.

Format of the H status

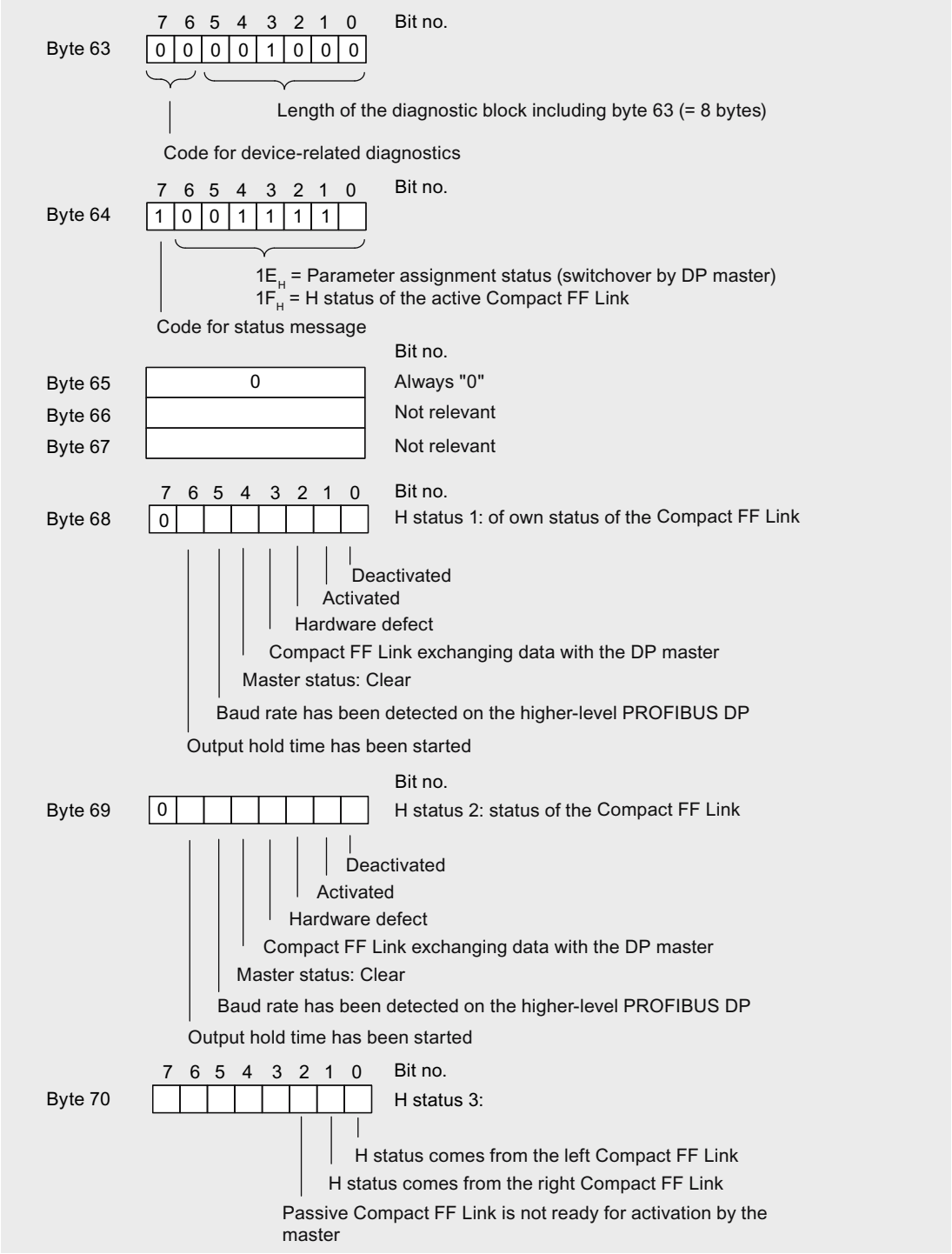

Figure 11-6 Format of the H status of the Compact FF Link FF in redundancy mode

11.3 Interrupts

Definition

The interrupt section provides information on the type of interrupt and the cause leading to the interrupt being triggered. The interrupt section is only transmitted if there is an interrupt.

The interrupt part consists of a maximum of 63 bytes.

Format of the interrupt section

The interrupt section consists of an interrupt header and the additional interrupt information. The interrupt header always comprises 4 bytes. The structure of the additional interrupt information depends on the interrupt type; its length is 59 bytes maximum.

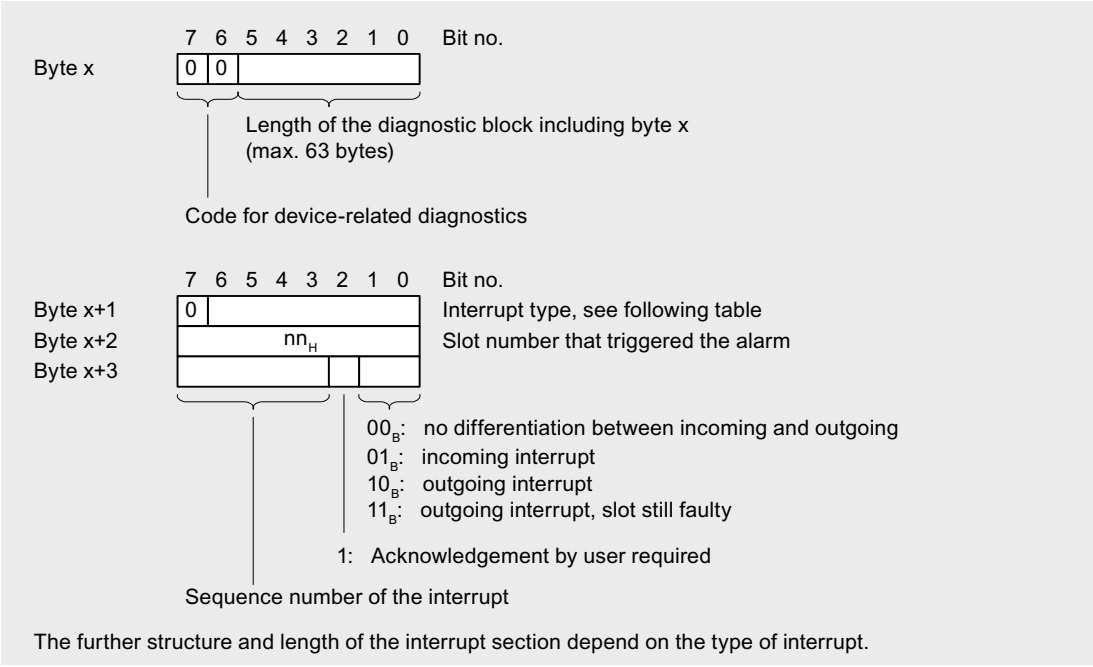

Figure 11-7 Format of interrupt header

Interrupt type

The Compact FF Link generates interrupts for itself and the FF devices. The following interrupt types are used:

- Diagnostic interrupt
- Pull / plug interrupt

Table 11-6 Interrupt type (bytes x+1 in the interrupt section)

Byte x+1	Interrupt type	Byte x+1	Interrupt type
00_H	Reserved	05_H	Status interrupt *
01_H	Diagnostic interrupt	06_H	Update interrupt *
02_H	Process interrupt *	07_H to $1F_H$	Reserved
03_H	Pull interrupt	20_H to $7E_H$	Manufacturer-specific interrupt *
04_H	Plug interrupt	$7F_H$	Reserved
* These interrupt types do not occur for FF devices.			

Additional interrupt information for diagnostic interrupt

For FF devices, the interrupt-specific information most be generated by Compact FF Link; in the additional interrupt data, the beginning of the ID is always 0xFF (in byte x+4) and a diagnostic cause is always entered (in byte x+5).

When the redundant bus link is used, the active Compact FF Link reports the event for the passive Compact FF Link as well.

The Compact FF Link reports the following diagnostic interrupts:

- For the Compact FF Link (slot 1 and 2):
  - 0x02 = Configuration error (e.g. DP-side configuration and retentive FF-side configuration present in Compact FF Link do not match)
  - 0x04 = External error, PROFIBUS address differs from the one used at startup; the redundant Compact FF Link has a different PROFIBUS address, **short circuit or wire break on the FF**
  - 0x08 = loss of ring redundancy (open ring, e.g. caused by a short circuit, cable break between 2 active field distributors, or failure of a single active field distributor)
- For the FF devices (slots 4-34):
  - 0x02 = incorrect assignment of the "Physical Device Tag" (name) to the configured FF device (address)

Additional interrupt information for pull/plug interrupts

When an FF device on the lower-level FF bus fails or is restored, the Compact FF Link FF triggers a pull or plug interrupt on the higher-level DP master system.

The FF address of the mapped FF device is entered in the additional interrupt information (in byte x+4); in Compact FF Link the value "0" is entered (in byte x+4).

FF devices (*slots 4-34*)

The pull interrupt for FF devices is generated if:

- After the startup delay for Compact FF Link, a configured FF device is not found on the FF bus
- An FF device is no longer recognized in operation

The plug interrupt for FF devices is generated if:

- A configured FF device is newly detected in operation based on its address.

The following table shows the relationship between pull/plug interrupts and diagnostic interrupts for FF devices.

Table 11-7 Alarm characteristics when an FF device is added

Required configuration	Device added	Reaction during startup delay	Response in Normal operation
Addr a, Name c	Addr a, Name c	FF device is added	FF device is added (plug interrupt)
	Addr a, Name y	Name incorrect (after startup delay diagnostic interrupt)	Name incorrect (plug interrupt and diagnostic interrupt)
	Addr z, Name c	Pull interrupt for FF devices with address a (after startup delay); no interrupt for FF devices with address z	No interrupt for FF devices with address z, if z does not belong to the project

11.4 Reading out diagnostics from FF devices

Overview

The diagnostic data of the FF devices can only be read out with *SIMATIC PDM*. *SIMATIC PDM* displays the status of FF devices which generate their diagnostics data in accordance with the FOUNDATION Fieldbus guideline (refer to chapter Standards and Approvals (Page 79)).

The diagnostic information alongside the status byte (quality code) made available by the FF device (e.g. device state) is implemented accordingly and the system is made available.

This makes it possible to access FF devices object-specifically. A direct path is created to the asset management here, i.e. FF devices are available in the maintenance station as individual objects for cyclic diagnostics through automatic linking. Non-cyclic diagnostics is also possible by means of *SIMATIC PDM*.

Reference

For more information about the diagnostics of FF devices, refer to the PCS 7 Process Control System, FOUNDATION Fieldbus (http://www.siemens.cm/pcs7-documentation) Commissioning Manual.

See also

The Process Device Manager (http://support.automation.siemens.com/WW/view/en/10806857/133300)

Technical data 12

12.1 General technical data

What are general technical specifications?

The technical specifications contain:

- The standards and test values that observe and fulfil the described components.
- The test criteria used to test the described components.

12.1.1 Standards and Approvals

Standards and Approvals

The components described meet the following standards and approvals.

Currently valid certifications can be found on the rating of the relevant module.

Note

Exception for active field distributors

Valid standards and approvals are specified in the relevant certificates and/or on the rating plates.

CE Label

The described components meet the requirements and protective aims of the following EC directives and comply with the harmonized European Standards (EN), published for programmable logic controllers (PLC) in the official gazettes of the European Union.

- 2014/30/EU "Electromagnetic Compatibility" (EMC Directive)
- 2014/34/EU "Equipment and protective systems intended for use in potentially explosive atmospheres" (Explosion-protection Directive)

You can find information on this at:

Siemens AG
Gleiwitzer Str. 555
DE-90475 Nuremberg
Germany

The EC Declaration of Conformity is also available for download from the Internet (http://www.siemens.com/automation/service&support) (keyword "Declaration of Conformity").

CCC approval

Certificate:

- 2020322310002912

According to the following standards:

- GB 3836.1-2010 (Explosive atmospheres - Part 1: Equipment - General requirements)
- GB 3836.8-2014 (Explosive atmospheres-Part 8: Equipment protection by type of protection "n")

UKCA approval

DEKRA 21UKEX0019 X

Importer UK:

Siemens plc

Manchester M20 2UR

ATEX Approval

DEKRA 14ATEX 0026 X

Nach EN 60079-7 (Electrical apparatus for potentially explosive atmospheres; Type of protection "ec") und EN 60079-0 (Explosive atmospheres; General requirements)

WARNING

Personal injury and material damage can be incurred.

In potentially explosive atmospheres, personal injury and material damage can be incurred if plug connections are disconnected during operation.

In potentially explosive atmospheres, only disconnect the plug connections of all components when they are not under current.

EAC Ex approval

2Ex nA IIC T4 ... T6 Gc X

IECEx approval

IECEX DEK 14.0082X

Nach IEC 60079-7 (Explosive atmospheres - Part 15: Equipment protection by type of protection "ec") und IEC 60079-0 (Explosive atmospheres - Part 0: Equipment - General requirements)

WARNING

Personal injury and material damage can be incurred.

In potentially explosive atmospheres, personal injury and material damage can be incurred if plug connections are disconnected during operation.

In potentially explosive atmospheres, only disconnect the plug connections of all components when they are not under current.

cULus HAZ. LOC. approval

Underwriters Laboratories Inc. in accordance with

- UL 508 (Industrial Control Equipment)
- ISA 12.12.01 (Hazardous Location)
- CSA C22.2 No. 142 (Process Control Equipment)
- CSA C22.2 No. 213 (Hazardous Location)

APPROVED for use in

- Class I, Division 2, Group A, B, C, D Tx;
- Class I, Zone 2, Group IIC Tx

Note the following information:

Note

This product must be installed according to the NEC (National Electric Code) stipulations.

When used in environments according to class I, division 2 (see above), S7-400 must be mounted in an enclosure that corresponds to at least IP54 according to EN 60529.

WARNING

Installation Instructions according cULus

WARNING – Explosion Hazard - Do not disconnect while circuit is live unless area is known to be non-hazardous.

WARNING – Explosion Hazard - Substitution of components may impair suitability for Class I, Division 2 or Class I, Zone 2

This equipment is suitable for use in Class I, Division 2, Groups A, B, C or D; Class I, Zone 2, Group IIC, or non-hazardous locations only.

FM approval

Factory Mutual Research (FM) in accordance with
Approval Standard Class Number 3611, 3600, 3810
APPROVED for use in

- Class I, Division 2, Group A, B, C, D Tx;
- Class I, Zone 2, Group IIC Tx

Tick mark for Australia and New Zealand

The components described satisfy the requirements of the following standard:
EN 61000-6-4: 2007 + A1: 2011

IEC 61131-2:2007

The components described satisfy the requirements and criteria of the following standards:

IEC 61131-2:2007 (Programmable Logic Controllers, Part 2: Equipment requirements and tests)

PROFIBUS standard

The components described are based on the following standards:

IEC 61784-1 CP 3/1

FOUNDATION Fieldbus

The Compact FF Link meets the requirements and criteria of the following FOUNDATION Fieldbus Directive:

Host registration by the Fieldbus Foundation; refer to the IEC 61158-2 on the Internet (http://www.fieldbus.org/index.php?option=com_mtree&task=viewlink&link_id=1873&ffbstatus=Registered&Itemid=324).

Use in industry

SIMATIC products are designed for industrial applications.

Area of application	Interference emission requirements	Interference immunity requirements
Industry	EN 61000-6-4: 2007 + A1: 2011	EN 61000-6-2 : 2005

Use in residential areas

If you use the described components in residential areas, you must ensure that they comply with the radio interference emission values of the following standard:
EN 61000-6-3 + A1

Suitable measures for achieving RF suppression are, for example:

- Installation in grounded control cabinets / switch boxes
- Use of interference filters in the supply lines

12.1.2 Use in zone 2 potentially explosive areas

See product information Using the modules in the hazardous zone 2 (http://support.automation.siemens.com/WW/view/en/19692172).

12.1.3 Electromagnetic Compatibility

Introduction

This chapter provides you with information on the immunity to interference of the described components as well as on radio interference suppression.

The described components meet, among others, the requirements of the EMC legislation of the European single market.

Definition: EMC

Electromagnetic compatibility (EMC) is the capacity of an electrical installation to function satisfactorily in its electromagnetic environment without affecting that environment.

Pulse-shaped Interference

The table below shows the electromagnetic compatibility of the described components with regard to pulse-shaped interference. The prerequisite for this is that the system complies with the relevant requirements and guidelines relating to electrical equipment.

Pulse-shaped disturbance	Tested at	Corresponds to severity
Electrostatic discharge according to IEC 61000-4-2	8 kV 6 kV	3 (air discharge) 3 (contact discharge)
Burst pulses (high-speed transient disturbances) according to IEC 61000-4-4	2 kV (supply line) 2 kV (signal line)	3
High-energy single pulse (surge) according to IEC 61000-4-5 External protective circuit needed (refer to the Automation System S7-400, Hardware and Installation (http://support.automation.siemens.com/WW/view/en/1117849) Installation Manual, chapter *Lightning protection and overvoltage protection*) It is not necessary to install an external protection circuit for the FF bus.		

Pulse-shaped disturbance	Tested at	Corresponds to severity
• Asymmetric interference	2 kV (supply line) 2 kV (signal cable/data line)	3
• Symmetric interference	1 kV (supply line) 1 kV (signal line / data line)	

Sinusoidal disturbance

EMC performance of the described components in relation to sinusoidal disturbance variables:

- Disturbance variables according to IEC 61000-4-3
  HF radiated, electromagnetic HF field, amplitude-modulated

80 to 1000 MHz	1.4 to 2 GHz	2.0 to 2.7 GHz
10 V/m		3 V/m
80% AM (1 kHz)		

- Disturbance variables according to IEC 61000-4-6
  HF coupling
  - **10 kHz to 80 MHz**
  - 10 Veff unmodulated
  - 80% AM (1 kHz)

Emission of Radio Interferences

Interference emission of electromagnetic fields according to the standard
EN 61000-6-4 + A1:

12.1.4 Shipping and storage conditions

Transport and Storage of Modules

The components described surpass the requirements for transport and storage conditions according to the following standard:
IEC 61131 Teil 2.

The following information applies to modules transported or stored in their original packaging.

Type of condition	Permitted range
Free fall (in transport packaging)	≤ 0.3 m
Temperature	from -40 °C to + 70 °C
Atmospheric pressure	from 1080 to 660 hPa (corresponds to an altitude of -1000 to 3500 m)
Relative humidity	of 10 to 95 %, without condensation

Type of condition	Permitted range
Sinusoidal vibrations in accordance with the standard: IEC 60068-2-6	5 to 8.4 Hz: 3.5 mm 8.4 to 500 Hz: 9.8 m/s^2
Shock according to IEC 60068-2-29	250 m/s^2, 6 ms, 1000 shocks

12.1.5 Mechanical and climatic ambient conditions for operation

Conditions of use

The described components are designed for use in a fixed, sheltered location. The operating conditions exceed the requirements of standard:
IEC 61131 Part 2.

The described components meet the operating conditions according to standard:
ISA S71.4 G3

Use with additional measures

The described components must not be operated without additional measures:

- at locations with a high degree of ionizing radiation
- in aggressive environments caused, for example, by
  - the development of dust
  - corrosive vapors or gases
  - strong electric or magnetic fields
- in installations requiring special monitoring, for example
  - elevators
  - electrical plants in potentially hazardous areas

An additional measure can be installation in a cabinet or in an enclosure, for instance.

Mechanical ambient conditions

The mechanical ambient conditions for the described components are specified in the table below for sinusoidal vibrations.

Frequency range in Hz	Continuous	Infrequently
10 ≤ f ≤ 58	0.0375 mm amplitude	0.075 mm amplitude
58 ≤ f ≤ 150	0.5 *g* constant acceleration	1 *g* constant acceleration

Reduction of vibrations

If the described components are subject to big shocks or vibrations appropriate measures must be taken to reduce the acceleration or the amplitude.

We recommend fixing the described components on damping materials (rubber-metal anti-vibration mountings, for example).

Checking mechanical ambient conditions

The following table provides information on the type and scope of checks regarding mechanical ambient conditions.

Checking for	Test standard	Remarks
Vibrations	Vibration test according to IEC 60068 Part 2-6 (sinusoidal)	Type of vibration: Frequency sweeps with a sweep rate of 1 octave/minute. 5 Hz ≤ f ≤ 8.4 Hz, constant amplitude 3.5 mm 8.4 Hz ≤ f ≤ 150 Hz, constant acceleration 1 g Period of oscillation: 10 frequency sweeps per axis in each of the 3 axis which are vertical to each other.
Shock	Shock test in accordance with IEC 60068 Part 2-29	Type of shock: half-sine Strength of shock: 15 g peak value, 11 ms duration Shock direction: 3 shocks each in +/- direction in each of the 3 axes that are vertical to each other

Climatic ambient conditions

The described components can be used in the following climatic ambient conditions:

Ambient conditions	Permitted range	Remarks
Temperature: Horizontal installation Vertical installation	 from -40 to 70 °C from -40 to 50 °C	• Compact FF Link 6ES7655-5BA00-0AB0 • BM Compact FF Link 6ES7655-5EF00-0AA0
Temperature: any type of installation	from -40 to 70 °C	Active field distributors See Operating Instructions *DP/PA coupler, Active Field Distributor, DP/PA Link and Y Link*
Relative humidity	from 10 to 95 %	Without condensation, corresponds to relative humidity (RH) stress class 2 in accordance with IEC 61131-2 With condensation: Active field distributors See Operating Instructions *DP/PA coupler, Active Field Distributor, DP/PA Link and Y Link*
Atmospheric pressure	from 1080 to 795 MHz	corresponds to a height of -1000 to 2000 m
Hazardous substance concentration SO_2	SO_2: < 0.5 ppm; RH < 60 %, no condensation	Test: 10 ppm; 21 days
Hazardous substance concentration H_2S	H_2S: < 0.1 ppm; RH < 60 %, no condensation	Test: 1 ppm; 21 days

12.1.6 Specifications for insulation tests, protection class and degree of protection

Test voltages

Insulation strength is demonstrated in the type test with the following proof voltages specified in IEC 61131-2:2007.

Circuits with a rated voltage of U_e relative to other circuits or ground	Test voltage
$0\ V < U_e \leq 50\ V$	600 V DC, 2 s

Protection class

Protection class II acc. to IEC 61131-2:2007

Protection against foreign bodies and water

Protection type IP30 according to IEC 60529, which means:

- protection against contact with standard probe
- Protection against solid bodies with diameters in excess of 2.5 mm
- No special protection against water

12.1.7 Rated voltage

Rated voltage for operation

The described components work with a rated voltage of 24 V DC.
The tolerance range extends from 20.4 V DC to 28.8 V DC.

Exceptions

- Active field distributors:
  For corresponding specifications, refer to Operating Instructions *DP/PA Coupler, Active Field Distributor, DP/PA Link and Y Link*.

12.2 Technical Specifications Compact FF Link (6ES7655-5BA00-0AB0)

Dimensions and weight	
Dimension W x H x D (mm)	40 x 125 x 130
Weight	Approx. 350 g
Module-specific data	
Transmission speed for the higher level DP master system	9.6; 19.2; 45.45; 93.75; 187.5; 500 kbps 1.5; 3; 6; 12 Mbps

Bus protocol	PROFIBUS DP / FOUNDATION Fieldbus H1
Frame length I / O data	Max. 244 bytes
Length of configuration frame	Max. 244 bytes
Length of diagnostic frame	Max. 244 bytes
Length of parameterization frame	Max. 244 bytes
suitable for plant changes in runtime	Yes
Transmission speed on FOUNDATION Fieldbus H1	31.25 Kbps
Bus protocol	FOUNDATION Fieldbus H1
Degree of protection	IP 20 to IEC 60529
Voltages, currents, potentials	
Rated supply voltage	24 VDC (20.4 V to 28.8 V)
Power consumption (24 VDC)	Max. 1.3 A
• Polarity reversal protection	Yes
Electrical isolation	
• FF for PROFIBUS DP	Yes
• DP master system for FOUNDATION Fieldbus	Yes
• FF / supply / DP	Yes
• All electric circuits / functional grounding	Yes
Insulation tested with	500 VDC
Output voltage for FF unit:	31 V DC ±1 V
• Voltage monitoring	15.5 V
• Overvoltage monitoring	U > 35 V; latching cutoff
• Power failure bypass	Min. 5 ms
Output current FF section: (for dimensioning the FF configuration)	
• Up to 70° C ambient temperature	500 mA (depending on mounting position)
• Power loss of the module	Max. 8 W
Data for connecting lower-level bus components	
Connection to Compact FF Link	• Max. 31 FF devices can be connected • Max. power consumption of the FF devices in total 500 mA • Devices with certification for FOUNDATION Fieldbus H1 • FF devices are located **outside** the hazardous area
Status, interrupts, diagnostics	
Status display	Yes
• Group error	Red LED "SF"
• Bus error on higher level DP master system	Red "BF DP" LED
• Compact FF Link has an active channel in redundant configuration	Yellow "ACT DP" LED
• Bus error on lower-level bus system	Red "BF FF" LED

• Compact FF Link has an active channel on the FOUNDATION Fieldbus	Yellow LED "ACT FF"
• Monitoring 24 V power supply	Green "ON" LED
Interrupts	Yes
Diagnostics function	Yes

12.3 Technical specifications of active field distributors

Reference

Technical specifications of the active field distributors are available in the DP/PA Coupler, Active Field Distributor, DP/PA Link and Y Link Operating Instructions.

Article numbers

A

A.1 Components for use of the Compact FF Link

Components of the bus link

Component	Article number
Compact FF Link	6ES7655-5BA00-0AB0
BM Compact FF Link	6ES7655-5EF00-0AA0
Active field distributors (Active Field Distributor and Active Field Splitter)	1)

1) Refer to the Operating Instructions DP/PA coupler, Active Field Distributor, DP/PA Link, and Y Link (http://support.automation.siemens.com/WW/view/en/1142696)

Accessories for installation

Component	Article number
Mounting rail "for standard configuration"	e.g.: 6ES7390-1AE80-0AA0
Mounting rail for the "hot-swapping modules" function • 482.6 mm • 530 mm • 620 mm • 2000 mm	 6ES7195-1GA00-0XA0 6ES7195-1GF30-0XA0 6ES7195-1GG30-0XA0 6ES7195-1GC00-0XA0
Covers (included are 4 backplane bus covers and 1 bus module cover)	6ES7195-1JA00-0XA0
PS 307 power supply with jumper	e.g.: 6ES7307-1BA00-0AA0

A.2 Accessories for PROFIBUS DP

Accessories for PROFIBUS DP

Table A-1 Article numbers for PROFIBUS DP accessories

Accessories	Article number
PROFIBUS DP bus connector RS485 with 90° cable outlet, max. transmission rate 12 Mbps	
• without PG socket	6ES7972-0BA12-0XA0
• with PG socket	6ES7972-0BB12-0XA0

Accessories	Article number
PROFIBUS DP bus connector RS485 with 90° cable outlet for FastConnect connection system, max. transmission rate 12 Mbps	
• without PG socket	6ES7972-0BA52-0XA0
• with PG socket	6ES7972-0BB52-0XA0
PROFIBUS FastConnect bus cable	
• Standard type with special design for fast installation, 2-wire, shielded	6XV1830-0EH10
PROFIBUS DP terminator	6ES7972-0DA00-0XA0

A.3 Accessories for FOUNDATION Fieldbus

Accessories for FOUNDATION Fieldbus

Table A-2 Article numbers for FOUNDATION Fieldbus accessories

Accessories	Article number
FF cable (blue)	6XV1830-5GH10
FF cable (orange)	6XV1830-5HH10

Additional information

For additional information please refer to the *ST PI Catalog*.

Glossary

Address

The address of a node is used for locating it in the network. It has to be unique in the entire network.

Aggregate current

Aggregate current of all PA or FF field devices.

Automation system

An automation system is a programmable control system, consisting of at least one CPU, various input and output modules as well as operating and monitoring devices.

Bus

A common transfer route to which all nodes are connected; it has two defined ends.

Bus connector

Physical connection between the bus node and bus cable.

Control in the Field (CiF)

The FOUNDATION fieldbus function "Control in the Field" (CiF) provides the option to control I/O blocks between FF devices on an FF segment without CPU intervention, i.e. without transfer to the process image. Control loops are also possible.

The Link Active Scheduler (LAS) controls data transmission on the FF segment.

Diagnostic interrupt

Diagnostics-capable components report system errors they have detected to the central CPU by means of diagnostic interrupts.

In SIMATIC S7: When an error is detected or disappears (e.g. wire break), provided the interrupt is enabled, the module initiates a diagnostic interrupt. The CPU interrupts the processing of the user program and lower priority priority classes and processes the diagnostic interrupt block (OB 82).

In SIMATIC S5: The diagnostic interrupt is shown within the device-related diagnostics You can identify errors, such as wire break, by cyclically scanning the diagnostic bits.

Diagnostics

Diagnostics is the detection, localization, classification, display and further evaluation of errors, faults and messages.

Diagnostics provides monitoring functions that run automatically while the plant is in operation. This increases the availability of plants by reducing commissioning times and downtimes.

DP master

A master that behaves in conformity with IEC 61784-1 CP 3/1 is termed a DP master.

DP slave

A slave that is operated on the PROFIBUS bus with the PROFIBUS DP protocol and that behaves in conformity with IEC 61784-1 CP 3/1 is termed a DP slave.

DP standard

is the bus protocol of the distributed I/O system in accordance with IEC 61784-1 CP 3/1.

DPV0

PROFIBUS DP mode between master and slave with the following properties:

- Cyclical data exchange between the central control system and slaves
- Configuration using GSD files
- Diagnostics

DPV1

Extension of DPV0:

- Non-cyclic data exchange between the central control system and slaves
- Integration in the engineering systems via EDD
- Transferable PLC software function blocks (IEC 61131-3)
- Fail-safe communication (PROFIsafe)
- Interrupts

EDD file

Standardized device descriptions (EDD - Electronic Device Description) permit the integration of intelligent field devices from different manufacturers into different control systems. The IEC 61804-3 standard stipulates the structure of device descriptions. This standard has been developed in cooperation with the following organizations:

- PROFIBUS International (PI)
- HART Communication Foundation (HCF)

- Fieldbus Foundation
- OPC Foundation

The EDDL (Electronic Device Description Language) is used as basis for the device descriptions.

Electromagnetic compatibility

Electromagnetic compatibility is the capacity of electrical equipment to function faultlessly in a specified environment without affecting the environment in an inadmissible manner.

Equipment, associated

A piece of electrical equipment that contains both intrinsically safe and non-intrinsically safe power circuits and is configured so that the non-intrinsically safe power circuits cannot impede the intrinsically safe ones.

Equipment, electrical

Components, power circuits or parts of power circuits that are normally to be found in their entirety in a single housing.

Equipment, intrinsically safe, electrical

A piece of electrical equipment in which all power circuits are intrinsically safe.

Equipotential bonding

Electrical connection (equipotential bonding conductor) that brings the bodies of electrical equipment and external conductive bodies to an equal or almost equal potential level to prevent disturbing or dangerous voltages between these bodies.

FF address

Each bus node must be assigned an FF address for unambiguous identification on FOUNDATION Fieldbus.

The following addresses are reserved in PCS 7:

- Range for the bus link:
  - Address 16: (left) Compact FF Link
  - Address 17: with redundant configuration: right Compact FF Link
- Address range 20 to 35: Typically for FF devices
- Address range 248 to 251: Range for temporary FF devices

FF Link Master

A master that behaves in conformity with IEC 61784-1 CP 1/1 is termed a FOUNDATION Fieldbus Link Master. The bus link (Compact FF Link) acts as a DP slave for "higher-level" systems (toward

the automation system) and as an FF Link Master for "lower-level" systems (toward the FF devices).

Field bus

The field bus is a serial bus system for the distributed integration of field devices in an automation system

Ground

The conductive earth whose electrical potential can be set equal to zero at any point.

Ground refers to the entirety of all interconnected inactive parts of a piece of equipment that cannot possess a dangerous contact voltage, even in the event of a malfunction.

Ground

The conductive earth whose electrical potential can be set equal to zero at any point.

Ground refers to the entirety of all interconnected inactive parts of a piece of equipment that cannot possess a dangerous contact voltage, even in the event of a malfunction.

Ground terminal PE

Name of the connector on electrical equipment in potentially explosive atmospheres that is wired to the equipotential bonding system.

Grounding

Grounding means connecting an electrically conductive part to a grounding system by means of the ground electrode.

GSD file

All slave-specific properties are stored in a Device Data Base File (DDBF file). The format of the DDBF file is to be found in the PROFIBUS guideline: Specification for PROFIBUS Device Description and Device Integration Vol.1: GSD V4.1, 07/2001 of the PROFIBUS-Nutzerorganisation (PNO).

H system

High availability system consisting of at least two central modules or two separate devices, for example PCs (master / reserve). The user program is processed identically in the master and in the reserve devices.

HW Config

Integral part of *STEP 7* for configuring hardware.

Identification and maintenance data

Identification data (I data) is information on the module, some of which are printed onto the module housing. I data are for reading only.

Maintenance data (M data) is plant-dependent information such as installation location, installation date etc. M data are created during configuration and written onto the module.

Identification and maintenance data (I&M) is information stored in a module to support you in

- Checking the system configuration
- Locating hardware modifications of a system
- Correcting errors in a system

Modules can be uniquely identified online by means of the I&M data.

Link Active Scheduler

The Link Active Scheduler (LAS) is a function of the FOUNDATION Fieldbus Link Master. The LAS uses schedules to control and coordinate data transmission between the FF devices on the FF segment. The Compact FF Link assumes the LAS function in normal operation. Suitable FF devices (Link Master) could assume the LAS function in principle.

Link Master

-> FF Link Master

Master

When a master is in possession of the token, it can send data to other nodes and request data from other nodes (= active node). DP master are, for example, the CPU 315-2 DP or IM 308-C.

Parameter assignment

Parameter assignment is the transfer of slave parameters from the master to the slave.

PNO

PROFIBUS User Organization

Power supply

A power supply feeds power to the field devices and to their connected distributed process I/O.

PROFIBUS

PROcess FIeld BUS, process and fieldbus standard as specified in IEC 61784-1 CPF 3 PROFIBUS and PROFINET. It specifies functional, electrical, and mechanical properties for a bit-serial field bus system.

PROFIBUS is available with the protocols: DP (=distributed I/O) and FMS (= Field bus Message Specification)

PROFIBUS address

Each bus node must be assigned a PROFIBUS address for unambiguous identification on PROFIBUS DP.

PC / PG or the ET 200 Handheld have the PROFIBUS address "0".

DP master and DP slaves have a PROFIBUS address from the 1 to 125 range.

PROFIBUS DP

PROFIBUS bus system with the DP protocol. DP stands for the German equivalent of distributed I/O.

PROFIBUS PA

PA stands for Process Automation and increases the range of usage of the PROFIBUS DP family to include the field of process engineering. Process engineering refers to both the intrinsically safe sectors of the chemicals industry and to the non-intrinsically safe sectors, such as nuclear power plant automation, the food industry and waste water technology.

Redundant systems

Redundant systems are characterized by the multiple (redundant) presence of important automation components. If a redundant component fails there the processing of the program is not interrupted.

Reference potential

The potential to which voltages of participating circuits are referenced when they are viewed and/or measured.

Schedule

The time at which an FF device transmits or reads cyclic data is defined in the schedule for the FOUNDATION Fieldbus. The schedule prevents conflicts on the FF segment during publisher/subscriber communication.

Segment

A segment or bus segment is a self-contained section of a serial bus system.

SELV

Safety extra low voltage (SELV) is voltage < 30 V AC / 60 V DC that is generated by means of safety transformer, accumulator etc.

SIMATIC PDM

SIMATIC PDM (Process Device Manager) is an integrated, vendor-neutral tool used for configuring, parameter assignment, commissioning and diagnosing intelligent process devices. *SIMATIC PDM* makes it possible to configure a large variety of process devices with a single software on a standardized user interface.

Terminating resistor

A terminating resistor is a resistor that terminates the data transmission line to avoid reflections.

Time synchronization

Time synchronization ensures that all clocks run synchronously. A master clock distributes the time in a configurable cycle to all other components in the automation system that have a clock. The components use this distributed time to set their own clocks.

TN-S system

In a TN-S system, the neutral conductor (N) and protective conductor (PE) are routed separately from each other. The neutral conductor is connected to the grounded protective conductor at a central point, and only there. The conductor can be grounded any number of times.

Token

In network technology a token refers to a bit pattern that is passed from one bus node to another, enabling that node to access the bus.

Transmission speed

The transmission speed specifies the number of bits transmitted per second.

Type of ignition protection

The special measures applied to electrical equipment to prevent the ignition of an ambient potentially explosive atmosphere.

Ungrounded

Having no conductive connection to ground

Update

After (compatible) functional upgrades or improvements to performance you should update the Compact FF Link to the most recent firmware version in each case.

Index

A

Accessories
  for FOUNDATION Fieldbus, 92
  for PROFIBUS DP, 91
Active Field Distributor, 15
Active Field Splitter, 15
AFD..., 15
AFS, 15
Ambient conditions
  mechanical, 85
  Operation, 85
  Transport and storage, 84
Article numbers, 91
ATEX mark, 80
Availability
  Compact FF Link, 21

B

Bus link
  Installing for non-redundant mode, 26
  Installing for redundancy mode, 28
  Startup characteristics, 45
  Startup characteristics in non-redundant mode, 46
  Startup characteristics in redundant mode, 47
  Wiring for coupler redundancy, 35
  Wiring for non-redundant mode, 34
  Wiring for ring redundancy, 36

C

CE mark, 79
Certifications, 79
  ATEX, 80
  CE, 79
  C-Tick, 82
  cULus HAZ. LOC., 81
  FM, 82
  IECEx, 80
  Industrial area, 82
  residential areas, 82
CiF, 56
Compact FF Link
  Applications, 17
  Availability, 21
  Non-redundant, 21
  Overvoltage protection, 49
  Properties, 13
  Replacing, 49
  Special features, 20
  Technical specifications, 87
Compact FF Link
  Configuration variants, 19
Components
  Accessories, 91
  Article numbers, 91
  Bus link for single-channel operation, 26
  for bus link in redundancy mode, 28
Conditions of use, 85
Configuration variants
  Compact FF Link, 19
  Coupler redundancy, 22
  Non-redundant, 21
  Ring redundancy, 23
Control in the Field, 56

D

Default diagnostics, 67
Device identifier, 69
Device-related diagnostics
  Module status, 71
  Status message, 73
Diagnostic interrupt, 76
DIP switch, 36
  Ring, 36
  RING, 30
Distributed I/O, 11

E

Electrical isolation, 33
Electromagnetic Compatibility, 83
Equipment
  open, 25

F

Failure
  FF devices, 49
Failure of components of the redundant DP master system, 44

Field distributors
    Grounding, 16
    Mounting position, 26
    Mounting system, 26
    Properties, 16
FM approval, 82
FOUNDATION Fieldbus
    Commissioning guideline, 39
    Wiring, 39

G

Galvanic properties, 33
Grounding, 33

H

H status, 73
Hardware requirements, 18

I

Identifier-related diagnostics, 69
IEC 60536, 87
Insulation test, 87
Interferences
    Pulse-shaped, 83
    Sinusoidal, 84
Internet
    Service & Support, 10
Interrupts, 75

M

Master to standby switchover, 44
Modification of hardware, 55
Modifying the system during operation, 55
Module status, 71
Mounting position, 25
    Field distributors, 26
Mounting system, 25
    Field distributors, 26

O

Overvoltage protection, 49

P

Power supply
    Wiring, 37
PROFIBUS address
    Setting, 30
PROFIBUS address of the DP master, 69
PROFIBUS DP
    Wiring to Compact FF Link, 38
Properties
    Compact FF Link, 13
    Field distributors, 16
Protection class, 87
Proxy diagnostic interrupt, 76
Pull / plug
    Compact FF Link, 49
    Interrupt, 76
Pulling
    Plugging, 49

Q

Quality code, 48

R

Radio Interference
    Emission, 84
Redundancy mode
    Setting, 30
Requirements
    Hardware, 18
    Software, 18
RING, 30, 36
Ring redundancy
    Activate, 30

S

Service & Support, 10
Slave diagnostics, 66
Software requirements, 18
Special features
    Compact FF Link, 20
Standard, 79
    FOUNDATION Fieldbus, 82
    IEC, 82
    PROFIBUS, 82

Startup characteristics
    Bus link in non-redundant mode, 46
    Bus link in redundancy mode, 47
Station status, 68
Status message, 73
Switch
    RING, 30

T

Technical Support, 10
Test voltages, 87
Training Center, 10
Type of protection
    IP30, 87

V

Vibrations, 85