SIEMENS

Industrial Controls

Monitoring and control devices SIRIUS 3UG4 / 3RR2 monitoring relay

Equipment Manual

07/2022
NEB927043002000/RS-AE/006

Introduction 1
Safety information 2
System overview 3
3RR2 current monitoring relays 4
3UG4501 filling level monitoring relay 5
3UG4.1 line monitoring relay 6
3UG4621/3UG4622 current monitoring relays 7
3UG4625 residual current monitoring relay with 3UL23 transformer 8
3UG458. insulation monitoring relay. 9
3UG463. voltage monitoring relay 10
3UG4641 cos phi and active current monitoring relay 11
3UG4651 speed monitoring relay 12
Accessories 13
References A
Parameters B
Dimension Drawings C
Menu-based operation D

Legal information

Warning notice system

This manual contains notices you have to observe in order to ensure your personal safety, as well as to prevent damage to property. The notices referring to your personal safety are highlighted in the manual by a safety alert symbol, notices referring only to property damage have no safety alert symbol. These notices shown below are graded according to the degree of danger.

⚠ DANGER

indicates that death or severe personal injury **will** result if proper precautions are not taken.

⚠ WARNING

indicates that death or severe personal injury **may** result if proper precautions are not taken.

⚠ CAUTION

indicates that minor personal injury can result if proper precautions are not taken.

NOTICE

indicates that property damage can result if proper precautions are not taken.

If more than one degree of danger is present, the warning notice representing the highest degree of danger will be used. A notice warning of injury to persons with a safety alert symbol may also include a warning relating to property damage.

Qualified Personnel

The product/system described in this documentation may be operated only by **personnel qualified** for the specific task in accordance with the relevant documentation, in particular its warning notices and safety instructions. Qualified personnel are those who, based on their training and experience, are capable of identifying risks and avoiding potential hazards when working with these products/systems.

Proper use of Siemens products

Note the following:

⚠ WARNING

Siemens products may only be used for the applications described in the catalog and in the relevant technical documentation. If products and components from other manufacturers are used, these must be recommended or approved by Siemens. Proper transport, storage, installation, assembly, commissioning, operation and maintenance are required to ensure that the products operate safely and without any problems. The permissible ambient conditions must be complied with. The information in the relevant documentation must be observed.

Trademarks

All names identified by ® are registered trademarks of Siemens AG. The remaining trademarks in this publication may be trademarks whose use by third parties for their own purposes could violate the rights of the owner.

Disclaimer of Liability

We have reviewed the contents of this publication to ensure consistency with the hardware and software described. Since variance cannot be precluded entirely, we cannot guarantee full consistency. However, the information in this publication is reviewed regularly and any necessary corrections are included in subsequent editions.

Siemens AG
Smart Infrastructure
Electrical Products
Postfach 10 09 53
93009 Regensburg
GERMANY

NEB927043002000/RS-AE/006
Ⓟ 07/2022 Subject to change

Copyright © Siemens AG 2011.
All rights reserved

Table of contents

1 Introduction 9

1.1 Siemens Industry Online Support 9

1.2 DataMatrix code 11

1.3 Siemens Industry Online Support app 12

1.4 Support Request 12

2 Safety information 13

2.1 Standards 13

2.2 Requirements for switching high-efficiency motors 14

2.3 Voltages 14

2.4 Notes on the protection of device connections 14

2.5 Product-specific safety information 15

2.5.1 Current information about operational safety 15

2.6 Recycling and disposal 16

2.7 Security information 16

2.8 Approvals, test certificates, characteristics 16

3 System overview 17

3.1 Product description 17

3.2 Application planning 18

3.3 Connection methods 18

3.3.1 Screw-type connection 18

3.3.2 Spring-loaded connection 21

3.3.3 Device replacement by means of removable terminals 26

3.4 Mounting / removal 27

3.4.1 Mounting 3RR2 current monitoring relay 27

3.4.2 Mounting the 3UG4 monitoring relay 32

3.4.3 Installing the 3UG458. monitoring relay. 33

3.5 Overview of the functions 35

3.5.1 3RR2 current monitoring relays 35

3.5.2 3UG45 / 3UG46 monitoring relays 36

3.6 Menu-based operation 37

4 3RR2 current monitoring relays 43

4.1 Product description 43

4.2 Application areas 44

4.3 Performance features of current monitoring relays 46

4.3.1 General data ... 46
4.3.2 Properties ... 47
4.3.3 Configuration of load feeders ... 48
4.3.4 Combinations with 3RT20 contactor ... 48

4.4 3RR21 current monitoring relays ... 49
4.4.1 Operator controls and connection terminals ... 49
4.4.2 Function ... 50
4.4.3 Operation ... 53
4.4.4 Diagnostics ... 54
4.4.5 Circuit diagrams ... 54
4.4.6 Technical data ... 55

4.5 3RR22 current monitoring relays ... 56
4.5.1 Operator controls and connection terminals ... 56
4.5.2 Function ... 57
4.5.3 Operation ... 60
4.5.4 Diagnostics ... 62
4.5.5 Circuit diagrams ... 63
4.5.6 Technical data ... 64

5 3UG4501 filling level monitoring relay ... 65

5.1 Application areas ... 65

5.2 Operator controls and connection terminals ... 66

5.3 Functions ... 66

5.4 Operation ... 70

5.5 Diagnostics ... 70
5.5.1 Diagnostics with LED ... 70

5.6 Circuit diagrams ... 71

5.7 Technical data ... 72

6 3UG4.1 line monitoring relay ... 73

6.1 Application areas ... 74

6.2 3UG4511 line monitoring relay ... 75
6.2.1 Operator controls and connection terminals ... 75
6.2.2 Function ... 75
6.2.3 Diagnostics ... 77
6.2.3.1 Diagnostics with LED ... 77
6.2.4 Circuit diagrams ... 77
6.2.5 Technical data ... 78

6.3 3UG4512 line monitoring relay ... 79
6.3.1 Operator controls and connection terminals ... 79
6.3.2 Function ... 79
6.3.3 Diagnostics ... 81
6.3.3.1 Diagnostics with LED ... 81
6.3.4 Circuit diagrams ... 82
6.3.5 Technical data ... 83

6.4 3UG4513 line monitoring relay ... 84
6.4.1 Operator controls and connection terminals ... 84

6.4.2 Function ... 84
6.4.3 Operation ... 86
6.4.4 Diagnostics ... 87
6.4.4.1 Diagnostics with LED ... 87
6.4.5 Circuit diagrams ... 88
6.4.6 Technical data ... 88

6.5 3UG4614 line monitoring relay ... 89
6.5.1 Operator controls and connection terminals ... 89
6.5.2 Functions ... 89
6.5.3 Operation ... 92
6.5.4 Diagnostics ... 93
6.5.4.1 Indications on the display ... 93
6.5.4.2 Reset ... 94
6.5.5 Circuit diagrams ... 94
6.5.6 Technical data ... 95

6.6 3UG4615 / 3UG4616 line monitoring relays ... 96
6.6.1 Operator controls and connection terminals ... 96
6.6.2 Functions ... 97
6.6.3 Operation ... 99
6.6.4 Diagnostics ... 100
6.6.4.1 Indications on the display ... 100
6.6.4.2 Reset ... 101
6.6.5 Circuit diagrams ... 102
6.6.6 Technical data ... 103

6.7 3UG4617 / 3UG4618 line monitoring relays ... 104
6.7.1 Operator controls and connection terminals ... 104
6.7.2 Functions ... 105
6.7.3 Operation ... 108
6.7.4 Diagnostics ... 109
6.7.4.1 Indications on the display ... 109
6.7.4.2 Reset ... 110
6.7.5 Circuit diagrams ... 111
6.7.5.1 Internal circuit diagrams ... 111
6.7.5.2 Wiring examples ... 112
6.7.6 Technical data ... 112

7 3UG4621/3UG4622 current monitoring relays ... 113

7.1 Application areas ... 113

7.2 Operator controls and connection terminals ... 114

7.3 Functions ... 114

7.4 Operation ... 119

7.5 Diagnostics ... 120
7.5.1 Indications on the display ... 120
7.5.2 Reset ... 121

7.6 Circuit diagrams ... 121
7.6.1 Internal circuit diagrams ... 121
7.6.2 Wiring examples (3UG46..-.AW30) ... 122
7.6.3 Wiring examples (3UG462.-.AA30) ... 122

7.7 Technical data ... 123
8 3UG4625 residual current monitoring relay with 3UL23 transformer ... 125
8.1 Application areas ... 125
8.2 Operator controls and connection terminals ... 126
8.3 Functions ... 126
8.4 Operation ... 134
8.5 Diagnostics ... 135
8.5.1 Indications on the display ... 135
8.5.2 Reset ... 136
8.6 Circuit diagrams ... 137
8.6.1 Internal circuit diagrams ... 137
8.6.2 Wiring examples ... 138
8.7 Technical data ... 139
9 3UG458. insulation monitoring relay ... 141
9.1 Application areas ... 142
9.2 Performance features of the insulation monitoring relays ... 143
9.3 3UG4581 insulation monitoring relay ... 145
9.3.1 Operator controls and connection terminals ... 145
9.3.2 Functions ... 148
9.3.3 Operator control ... 152
9.3.4 Diagnostics ... 153
9.3.4.1 Diagnostics with LEDs ... 153
9.3.5 Circuit diagrams ... 154
9.3.5.1 Internal circuit diagrams ... 154
9.3.6 Characteristics ... 156
9.3.7 Technical data ... 158
9.4 3UG4582/3UG4583 insulation monitoring relays ... 159
9.4.1 Operator controls and connection terminals ... 159
9.4.2 Functions ... 167
9.4.2.1 Function diagrams ... 171
9.4.3 Operator control ... 177
9.4.4 Diagnostics ... 180
9.4.4.1 Diagnostics with LEDs ... 180
9.4.5 Circuit diagrams ... 181
9.4.5.1 Internal circuit diagrams ... 181
9.4.5.2 Wiring examples ... 182
9.4.6 Characteristics ... 186
9.4.7 Technical data ... 190
10 3UG463. voltage monitoring relay ... 191
10.1 Application areas ... 191
10.2 3UG4631 / 3UG4632 voltage monitoring relay ... 192
10.2.1 Operator controls and connection terminals ... 192
10.2.2 Functions ... 192

10.3 3UG4633 voltage monitoring relay ... 195
10.3.1 Operator controls and connection terminals ... 195
10.3.2 Functions ... 195
10.4 Operation ... 198
10.5 Diagnostics ... 199
10.5.1 Indications on the display ... 199
10.5.2 Reset ... 200
10.6 Circuit diagrams ... 201
10.6.1 Internal circuit diagrams ... 201
10.6.2 Wiring examples ... 202
10.7 Technical data ... 203
11 3UG4641 cos phi and active current monitoring relay ... 205
11.1 Application areas ... 205
11.2 Operator controls and connection terminals ... 206
11.3 Functions ... 206
11.4 Operation ... 211
11.5 Diagnostics ... 212
11.5.1 Indications on the display ... 212
11.5.2 Reset ... 213
11.6 Circuit diagrams ... 213
11.6.1 Internal circuit diagrams ... 213
11.6.2 Wiring examples ... 214
11.7 Technical data ... 215
12 3UG4651 speed monitoring relay ... 217
12.1 Application areas ... 217
12.2 Operator controls and connection terminals ... 218
12.3 Functions ... 218
12.4 Operation ... 222
12.5 Diagnostics ... 223
12.5.1 Indications on the display ... 223
12.5.2 Reset ... 224
12.6 Circuit diagrams ... 224
12.6.1 Internal circuit diagrams ... 224
12.6.2 Wiring examples ... 225
12.7 Technical data ... 226
13 Accessories ... 227
13.1 Accessories for 3RR2 current monitoring relays ... 227
13.1.1 Sealable cover ... 227
13.1.2 Terminal support for stand-alone assembly ... 228
13.2 Accessories for 3UG4 monitoring relays ... 231

13.2.1 Sealable cover ... 231
13.2.2 Push-in lugs ... 232
13.2.3 Probes for the 3UG4501 monitoring relay ... 233
13.2.4 Summation current transformer for the 3UG4624 monitoring relay ... 234
13.2.5 3UL23 residual current transformers for 3UG4625 monitoring relays ... 235
13.2.5.1 General information ... 235
13.2.5.2 Installation specifications ... 237
13.2.5.3 Potential for optimization ... 240
13.2.5.4 Installation faults ... 242
13.2.5.5 Internal circuit diagram ... 245
13.2.5.6 Installing ... 246
13.2.5.7 Dimension drawings ... 248

13.3 Accessories for 3UG458.-1AW30 / 3UG4583-1CW30 insulation monitoring relays ... 251
13.3.1 Sealable cover ... 251
13.3.2 3UG4983 voltage reducer module for the 3UG4583-1CW30 monitoring relay ... 252
13.3.2.1 Internal circuit diagrams ... 254
13.3.2.2 Technical data ... 256

13.4 Accessories for 3UG4583-1CW31 insulation monitoring relays ... 257
13.4.1 3UG4983-.AA01 voltage reducer module for the 3UG4583-1CW31 monitoring relay ... 257
13.4.1.1 Internal circuit diagrams ... 260
13.4.1.2 Typical circuit diagrams (3UG4983-.AA01) ... 260
13.4.1.3 Technical specifications ... 262

A References ... 263

B Parameters ... 265

C Dimension Drawings ... 275

C.1 Dimension drawings 3RR2 monitoring relay ... 275

C.2 Dimension drawings 3UG4 monitoring relays ... 282
C.2.1 Dimension drawings 3UG4 monitoring relays. (2 connecting terminals) ... 282
C.2.2 Dimension drawings 3UG4 monitoring relays. (3 connecting terminals) ... 283
C.2.3 Dimension drawings 3UG4 monitoring relays. (4 connecting terminals) ... 284
C.2.4 Dimension drawings for 3UG458.-1.W30 insulation monitoring relay/3UG4983 voltage reducer module) ... 285
C.2.5 Dimension drawings for 3UG458.-..W31 insulation monitoring relay/3UG4983-.AA01 voltage reducer module) ... 286

D Menu-based operation ... 291

Index ... 309

Introduction

1

Purpose of the manual

This manual describes the 3UG4 monitoring relays for stand-alone assembly and the 3RR2 current monitoring relays for mounting on 3RT2 contactors

The manual provides overview information for integrating the monitoring relays into the system environment, and it describes the hardware and software components of the devices.

The information in this manual enables you to commission the monitoring relays.

Required basic knowledge

To understand these operating instructions you should have a general knowledge of automation engineering and low-voltage switchgear.

Scope of the manual

The manual is valid for these monitoring relays. It contains a description of the devices that is valid at the time of publication.

1.1 Siemens Industry Online Support

Information and service

At Siemens Industry Online Support you can obtain up-to-date information from our global support database:

- Product support
- Application examples
- Forum
- mySupport

Link: Siemens Industry Online Support (https://support.industry.siemens.com/cs/de/en)

Product support

You can find information and comprehensive know-how covering all aspects of your product here:

- **FAQs**
  Answers to frequently asked questions
- **Manuals/operating instructions**
  Read online or download, available as PDF or individually configurable.
- **Certificates**
  Clearly sorted according to approving authority, type and country.
- **Characteristics**
  For support in planning and configuring your system.
- **Product announcements**
  The latest information and news concerning our products.
- **Downloads**
  Here you will find updates, service packs, HSPs and much more for your product.
- **Application examples**
  Function blocks, background and system descriptions, performance statements, demonstration systems, and application examples, clearly explained and represented.
- **Technical data**
  Technical product data for support in planning and implementing your project

Link: Product support (https://support.industry.siemens.com/cs/ww/en/ps)

mySupport

The following functions are available in your personal work area "mySupport":

- **Support Request**
  Search for request number, product or subject
- **My filters**
  With filters, you limit the content of the online support to different focal points.
- **My favorites**
  With favorites you bookmark articles and products that you need frequently.
- **My notifications**
  Your personal mailbox for exchanging information and managing your contacts. You can compile your own individual newsletter in the "Notifications" section.
- **My products**
  With product lists you can virtually map your control cabinet, your system or your entire automation project.
- **My documentation**
  Configure your individual documentation from different manuals.

- **CAx data**
  Easy access to CAx data, e.g. 3D models, 2D dimension drawings, EPLAN macros, device circuit diagrams
- **My IBase registrations**
  Register your Siemens products, systems and software.

Further documentation

To install and connect the monitoring relays, you require the operating instructions of the monitoring relays used.

The Appendix "References (Page 263)" has a list of the operating instructions.

1.2 DataMatrix code

DataMatrix code

A DataMatrix code is lasered onto all 3UG4/3RR2 monitoring relay devices underneath the label.

The DataMatrix codes are standardized in ISO/IEC 16022. The DataMatrix codes on Siemens devices use ECC200 coding for powerful error correction.

The following device information is encoded in the DataMatrix codes as a bit stream:

- Article number
- Serial number
- Where applicable, MAC address

This information is stored in the following format in the DataMatrix code:

1P	Article number	+	S	Location	/	Date	Serial number
Data identifier	User content	Separator	User content		Separator	User content	User content

Note

The information content is displayed without spaces.

This machine-readable information simplifies and accelerates handling of the respective devices. As well as fast access to the serial numbers of the respective devices for unique identification, the DataMatrix codes simplify communication with Siemens Technical Support.

1.3 Siemens Industry Online Support app

Siemens Industry Online Support app

The Siemens Industry Online Support app provides you access to all the device-specific information available on the Siemens Industry Online Support portal for a particular article number, such as operating instructions, manuals, data sheets, FAQs etc.

The Siemens Industry Online Support app is available for Android and iOS:

Android

iOS

1.4 Support Request

After you have registered, you can use the Support Request form in the online support to send your question directly to Technical Support:

Support Request:	Internet (https://support.industry.siemens.com/My/ww/en/requests)

Safety information 2

2.1 Standards

Applicable standards

The monitoring relays comply with the following standards:

Table 2-1 Standards - monitoring relays

Device standards	• IEC / EN 60947-1 "Low-voltage switchgear and controlgear: General rules" • IEC / EN 60947-4-1 "Contactors and motor-starters: Electromechanical contactors and motor-starters" • IEC / EN 60947-5-1 "Control circuit devices and switching elements: Electromechanical control circuit devices"; VDE 0660 "Low-voltage switchgear" • IEC / EN 61557-8 "Equipment for testing, measuring or monitoring of protective measures - Electrical safety in low voltage distribution systems up to 1000 V AC and 1500 V DC, Part 8: Insulation monitoring devices for IT systems". • DIN EN 50042 "Terminal marking" • DIN EN 61869-2 "Instrument transformers - Part 2: Additional requirements for current transformers"
EMC standard[1)]	• IEC / EN 61000-6-2 "Generic standards - Immunity for industrial environments" • IEC / EN 61000-6-4 "Generic standards - Emission standard for industrial environments"
Resistance to extreme climates	• IEC 60721-3-3 "Classification of environmental conditions" The monitoring relays are climate-proof according to IEC 60721-3.
Touch protection	• IEC / EN 60529 "Degrees of protection provided by enclosures" Monitoring relays are safe to touch in accordance with IEC / EN 60529.

1) This is a device of Class A. When used in domestic areas, the device can cause radio interference. Users may have to take suitable measures.

Reference

SIRIUS components have been approved by a whole range of bodies for various sectors (shipbuilding, etc.). An up-to-date list of approvals appears in Chapter 10 of the Catalog IC 10 - SIRIUS "Industrial Controls" (https://support.industry.siemens.com/cs/de/de/view/109747945/en), and more information, as well as an option to download certificates, can be obtained on the Internet (https://support.industry.siemens.com/cs/ww/en/ps/16364/cert).

2.2 Requirements for switching high-efficiency motors

The increased requirements for protection devices and switchgear when switching high-efficiency motors are covered by the new utilization category AC-3e introduced in the IEC 60947-4-1 product standard.
The utilization category AC-3e takes into account the higher switch-on characteristic of efficiency-enhanced motors. This is reflected, for example, in a higher starting current when starting squirrel-cage motors.
All SIRIUS protection devices and switchgear that are subject to the IEC 60947-4-1 product standard meet the increased requirements in accordance with utilization category AC-3e and are suitable for use with high-efficiency motors.

2.3 Voltages

The specifications for 3-phase line supply according to IEC 60947-4-1 are valid for the following line system configurations:

Voltage specification Ue in the Equipment Manual	**Line system configurations**	
	Three-phase four-wire systems	**Three-phase three-wire systems**
	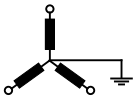	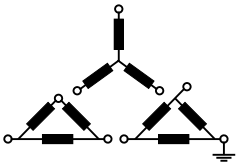
[V]	[V]	[V]
230	--	230
400	230 / 400	400
440	260 / 440	440
500	--	500
690	400 / 690	--

-- not specified

2.4 Notes on the protection of device connections

The specifications for short-circuit protection (fuses, circuit breakers, or miniature circuit breakers) are available for the device connections of the main circuit and the auxiliary circuit.
In order to ensure a holistic view for the protection of the device connections, the manufacturer is obliged to provide all relevant information for short-circuit protection and overcurrent protection.
If, for example, device connections for the control supply voltage, the supply voltage, or digital inputs/digital outputs are not connected to self-limiting current sources or energy sources, you can find the relevant information in the Equipment Manual or the technical data sheet.

2.5 Product-specific safety information

Improper use of the monitoring relay

Incorrect use of the monitoring relay and its accessories can lead to a risk of death, serious injury or property damage.

This equipment is only allowed to be used for the applications described in the catalog and in the technical description, and only in conjunction with non-Siemens equipment and components recommended by Siemens.

Correct transport, storage, installation and assembly, as well as careful operation and maintenance, are required to ensure that the product operates safely and without faults.

Before you run any sample programs or programs that you have written yourself, make sure that running the plant cannot cause injury to anyone else or damage to the machine itself.

Hazardous Voltage

⚠ WARNING

Hazardous Voltage.

Will cause death or serious injury.

Turn off and lock out all power supplying this device before working on this device.

Radio interference

Note

The devices have been built as Class A devices.
Use of these devices in domestic areas can result in radio interference!

2.5.1 Current information about operational safety

Important note for maintaining the operational safety of your system

Please take note of our latest information. Systems with safety-oriented characteristics are subject to special operational safety requirements on the part of the operator. The supplier is also obliged to comply with certain actions when monitoring the product. By subscribing to the appropriate newsletter, you will ensure that you are always up-to-date and able to make changes to your system, when necessary:

For this purpose, go to the page: SIEMENS newsletter (http://www.siemens.com/sirius/newsletter)

Click "Subscribe to newsletter".

2.6 Recycling and disposal

For environmentally-friendly recycling and disposal of your old device, contact a company certified for the disposal of used electrical and electronic equipment, and dispose of the device as specified in the regulations for your particular country.

2.7 Security information

Siemens provides products and solutions with industrial security functions that support the secure operation of plants, systems, machines and networks.

In order to protect plants, systems, machines and networks against cyber threats, it is necessary to implement – and continuously maintain – a holistic, state-of-the-art industrial security concept. Siemens' products and solutions constitute one element of such a concept.

Customers are responsible for preventing unauthorized access to their plants, systems, machines and networks. Such systems, machines and components should only be connected to an enterprise network or the internet if and to the extent such a connection is necessary and only when appropriate security measures (e.g. firewalls and/or network segmentation) are in place.

For additional information on industrial security measures that may be implemented, please visit
https://www.siemens.com/industrialsecurity.

Siemens' products and solutions undergo continuous development to make them more secure. Siemens strongly recommends that product updates are applied as soon as they are available and that the latest product versions are used. Use of product versions that are no longer supported, and failure to apply the latest updates may increase customer's exposure to cyber threats.

To stay informed about product updates, subscribe to the Siemens Industrial Security RSS Feed under
https://www.siemens.com/cert.

2.8 Approvals, test certificates, characteristics

Approvals, test certificates, characteristics

You can find an overview of the certifications available for low-voltage controls and distribution products and other technical documentation, updated daily, on the Internet (https://support.industry.siemens.com/cs/ww/en/ps/16364/cert).

You will find further information in the Catalog IC 10 - SIRIUS "Industrial Controls," Chapter 10 (https://support.industry.siemens.com/cs/ww/en/view/109771990).

System overview

3

3.1 Product description

Product description

The tried and tested SIRIUS monitoring relays for electrical and mechanical quantities enable constant monitoring of all important characteristic quantities that provide information about the reliability performance of the plant. Sudden disturbances and gradual changes, which may reveal a maintenance requirement, for example, are both indicated. By means of relay outputs, the monitoring relays enable direct shutdown of the affected sections of the plant as well as issuing an alarm (e.g. by switching on a warning lamp). To respond flexibly to short-term disturbances such as voltage dips or load variation, the monitoring relays have settable delay times. This avoids unnecessary alarming and shutdowns while enhancing plant availability.

The individual 3UG4 monitoring relays offer the following functions in various combinations:

- Undershoot and/or overshoot of liquid levels
- Phase sequence
- Phase failure, neutral failure
- Phase asymmetry
- Undershoot and/or overshoot of voltage thresholds
- Undershoot and/or overshoot of current thresholds
- Undershoot and/or overshoot of power factor thresholds
- Monitoring of the active current or apparent current
- Monitoring of the fault current
- Monitoring the insulation resistance
- Undershoot and/or overshoot of speed thresholds

The 3RT2 contactors for mounting on 3RR2 current monitoring relays offer:

- Phase sequence
- Phase failure
- Undershoot and/or overshoot of current thresholds
- Monitoring of the active current or apparent current
- Monitoring of the fault current

3.2 Application planning

The following information must be taken into account when planning applications involving the SIRIUS monitoring relays.

Installation altitude

The monitoring relays are approved for installation altitudes up to 2,000 m. The reduced air density at altitudes higher than 2,000 meters affects the electrical characteristics of the monitoring relays. The reduction factors which have to be taken into account when using monitoring relays at altitudes higher than 2,000 m can be obtained on request on the Internet (https://support.industry.siemens.com/My/ww/en/requests).

Operating conditions and resistance to extreme climates

The monitoring relays are climate-proof. They are intended for use in enclosed spaces in which no severe operating conditions prevail (e.g. dust, caustic vapors, hazardous gases). Appropriate measures must be taken when installing in areas subject to dust and humidity. Condensation on the devices is not permissible.

Special application environments

The SIRIUS devices have been approved by a whole range of bodies for various sectors (shipbuilding, etc.). An up-to-date list of approvals is provided in Chapter 10 of the Catalog IC 10 - SIRIUS "Industrial Controls." You will find more information and an option to download certificates on the Internet (https://support.industry.siemens.com/cs/ww/en/ps/16364/cert).

3.3 Connection methods

3.3.1 Screw-type connection

Screw-type connection

Use the following tool to establish the connection: All SIRIUS monitoring relays feature size PZ 2 screws for Pozidriv screwdrivers.

The devices have screw terminals with captive screws and washers. The screw terminals also allow for the connection of 2 conductors with different cross-sections.

Connection cross-sections of the removable terminal blocks with screw-type connections

Table 3-1 Removable terminal block with screw-type connections - monitoring relays

		Removable terminal
Tool	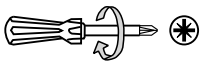	Pozidriv size PZ 2, Ø 5 to 6 mm
Tightening torque		0.8 to 1.2 Nm
Solid and stranded	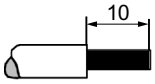	1 x (0.5 to 4) mm²
		2 x (0.5 to 2.5) mm²
Finely stranded without end sleeve	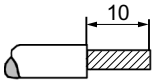	---
Finely stranded with end sleeve	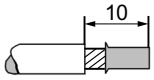	1 x (0.5 to 2.5) mm²
		2 x (0.5 to 1.5) mm²
AWG		2 x (20 to 14)

Connection cross-sections of the removable terminal blocks with screw-type connections

Table 3-2 Removable terminal block with screw-type connection technology- insulation monitoring relay 3UG458.-1AW31 / 3UG4583-1CW31 / voltage reducer module 3UG4983-1AA01

		Removable terminal
Tool	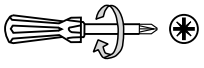	Pozidriv size PZ 1, diam. 4.5 mm
Tightening torque		0.6 to 0.8 Nm
Solid and stranded	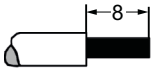	1 x (0.5 to 4.0) mm²
		2 x (0.5 to 2.5) mm²
AWG		1 x (20 to 12)
		2 x (20 to 14)
Finely stranded without end sleeve	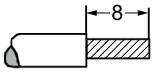	1 x (0.5 to 2.5) mm²
		2 x (0.5 to 1.5) mm²
AWG		1 x (18 to 14)
		2 x (18 to 16)
Finely stranded with end sleeve	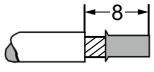	1 x (0.5 to 2.5) mm²
		2 x (0.5 to 1.5) mm²
AWG		1 x (18 to 14)
		2 x (18 to 16)

Connection cross-sections of the permanently connected terminal blocks with screw-type connections

The following table lists the permissible conductor cross-sections for the main conductor connections of 3RR2 current monitoring relays with analog and digital setting (size S00, S0 and S2) with screw-type connections.

Table 3-3 Permanently connected terminal block with screw-type connection - Main conductor terminals of the 3RR2 current monitoring relays

		Permanently connected terminal		
		Size S00	**Size S0**	**Size S2**
Tool	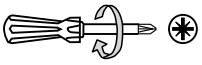	Pozidriv size PZ 2, Ø 5 to 6 mm	Pozidriv size PZ 2, Ø 5 to 6 mm	Pozidriv size PZ 2 Ø 5 to 6 mm
Tightening torque		0.8 to 1.2 Nm	2 - 2.5 Nm	3 to 4.5 Nm (27 to 40 lb.in)
Solid and stranded	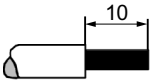	2 x (0.5 to 1.5) mm²	2 x (1 to 2.5) mm²	2 x (1.0 to 35 mm²)
		2 x (0.75 to 2.5) mm²	2 x (2.5 to 10) mm²	1 x (1.0 to 50 mm²)
		max. 2 x (1 ... 4) mm²		
Finely stranded without end sleeve	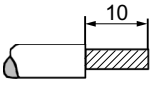	---	---	---
Finely stranded with end sleeve	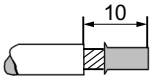	2 x (0.5 to 1.5) mm²	2 x (1 to 2.5) mm²	2 x (1.0 to 25 mm²)
		2 x (0.75 to 2.5) mm²	2 x (2.5 to 6) mm²	1 x (1.0 to 35 mm²)
			max. 1 x 10 mm²	
AWG		2 x (20 to 14)	2 x (16 to 12)	2 x (18 to 2)
		1 x 12	2 x (14 to 8)	1 x (18 to 1)

3.3.2 Spring-loaded connection

Spring-loaded connection

All SIRIUS monitoring relays have spring-loaded connections. They make wiring quick and maintenance-free, while also meeting high demands in terms of vibration and shock resistance. If the cross-section of a connectable wire is greater than 6 mm², the forces required for operation of the tension spring are so high that the spring-loaded connection can no longer be used in a problem-free manner. For this reason, size S2 current monitoring relays are only offered with screw-type or spring-loaded terminals in the control circuit. The terminals of the main current paths are always screw-type terminals.

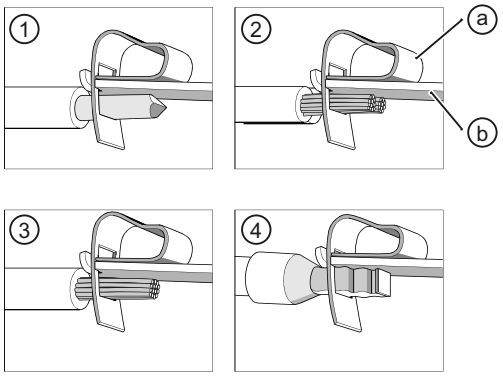

① Solid
② Finely stranded
③ Stranded
④ Finely stranded with end sleeve
a Spring-loaded terminal
b Busbar

Figure 3-1 Spring-loaded terminal

The conductors can be clamped directly or you can pre-treat them to add a form of splice protection. This could involve attaching end sleeves or pin cable lugs to the ends of the conductors; the tidiest solution is to use conductors whose ends have been sealed by means of ultrasound.

The devices are equipped with a two-wire terminal, i.e. two independent connections for each current path (exception: in the case of 3RR2, terminals of the main current paths have one clamping point). Just one conductor is connected to each clamping point. The spring-loaded terminal presses the conductor against the busbar, which curves around inside the terminal. The high contact pressure per unit area achieved in this way is gas-tight. The spring-loaded terminal presses flat against the conductor, but does not damage it. The spring force of the spring-loaded terminal has been dimensioned such that the clamping force adjusts to the conductor diameter automatically. This ensures that any conductor deformation caused by settling, creepage, or yielding is compensated for. The clamping point cannot become loose of its own accord. This connection is vibration- and shock-proof. Vibrations or shocks will not damage the conductor, nor will they cause contact separation. These terminals are particularly well suited for use with machines and systems which are subject to stresses such as these, e.g. vibrators, rail vehicles, and elevators.

The contact pressure between the conductor and the busbar is set to an optimum level, so this clamp connection is appropriate for high-voltage applications, as well as for transferring voltages and currents in the mV or mA range within instrumentation and electronic components.

A standardized screwdriver (3 mm slot; 3RA2908-1A) is offered in the Catalog IC10 "Industrial Controls" (https://support.industry.siemens.com/cs/de/de/view/109747945/en) as an actuation tool for opening the spring-loaded terminals.

Spring-loaded terminal for mountable 3RR2 current monitoring relays

The table below describes the procedure for creating a spring-loaded connection:

DANGER

Hazardous Voltage.

Will cause death or serious injury.

Turn off and lock out all power supplying this device before working on this device.

Connecting the 3RR2 current monitoring relay spring-loaded terminal

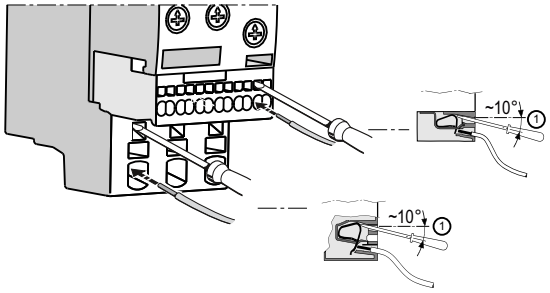

① Insert the screwdriver into the respective operating slot.

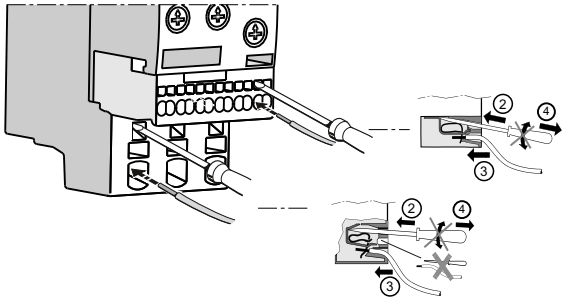

② Press the screwdriver down, then push it into the operating slot as far as it will go.
The screwdriver blade keeps the spring-loaded terminal open automatically.

③ Insert the conductor into the oval connection slot.

④ Remove the screwdriver. The terminal closes and the conductor is now securely clamped.

Note

Damage to spring-loaded terminal on the 3RR2 current monitoring relay!

If you insert the screwdriver into the central opening (main circuit S00 and S0 only) on the spring-loaded terminal, this could damage the terminal.

Do not insert the screwdriver into the central opening on the spring-loaded terminal.

Spring-loaded terminal for 3UG4 monitoring relay

Connecting the monitoring relay spring-loaded terminal

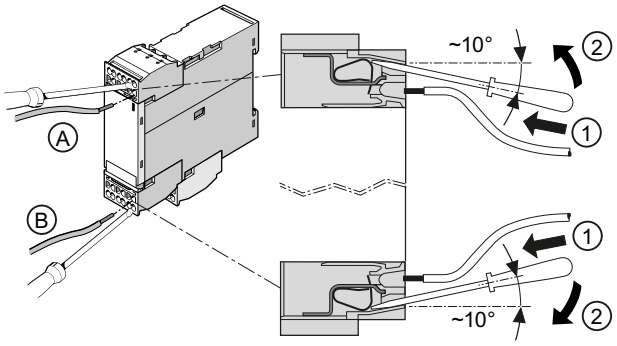

① Insert the screwdriver into the topmost (A) or bottommost (B) operating slot on the right-hand side.

② Press the screwdriver up (A) or down (B), then push it into the operating slot as far as it will go. The screwdriver blade keeps the spring-loaded terminal open automatically.

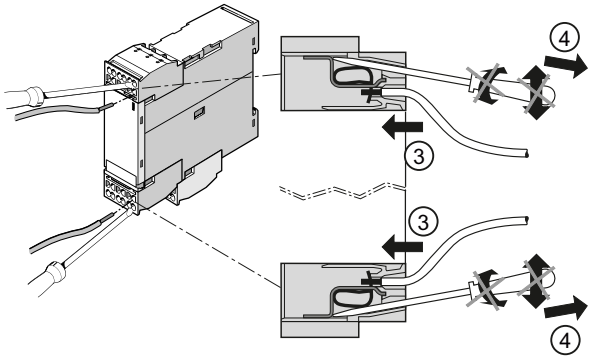

③ Insert the conductor into the oval connection slot.

④ Remove the screwdriver. The terminal closes and the conductor is now securely clamped.

Spring-loaded terminal for 3UG458.-2AW31 / 3UG4583-2CW31 / 3UG4983-2AA01 insulation monitoring relays

Connecting the spring-loaded terminal (solid and stranded/finely stranded with end sleeve)

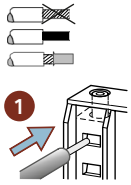

① Insert the conductor into the connection opening.

Connecting the spring-loaded terminal (finely stranded without end sleeve)

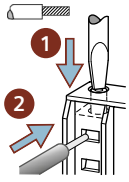

① Insert the screwdriver into the operating slot.
② Insert the conductor into the connection opening.

Remove the conductor from the spring-loaded terminal

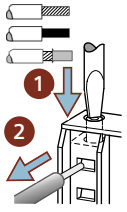

① Insert the screwdriver into the operating slot.
② Pull the conductor out of the connection opening.

Connection cross-sections of the removable terminal blocks with a spring-loaded connection (3RR and 3UG)

Table 3-4 Removable terminal block with spring-loaded connections - monitoring relays

		Removable terminal
Tool	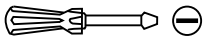	Ø 3.0 x 0.5 (3RA2908-1A)
Solid and stranded	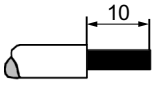	2 x (0.25 to 1.5) mm²

		Removable terminal
Finely stranded without end sleeve	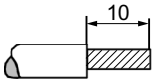	2 x (0.25 to 1.5) mm²
Finely stranded with end sleeve	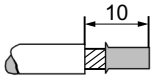	2 x (0.25 to 1.5) mm²
AWG		2 x (24 to 16)

Conductor cross-sections of the removable terminal blocks with spring-loaded connection technology

Table 3-5 Removable terminal block with spring-loaded connection technology - insulation monitoring relay 3UG458.-2AW31 / 3UG4583-2CW31 / voltage reducer module 3UG4983-2AA01

		Removable terminal
Tool		Ø 3.0 x 0.5 (3RA2908-1A)
Solid and stranded	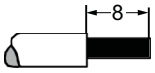	2 x (0.5 to 1.5) mm²
AWG		2 x (20 to 16)
Finely stranded without end sleeve	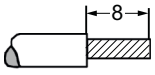	2 x (0.5 to 1.5) mm²
AWG		2 x (18 to 16)
Finely stranded with end sleeve	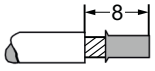	2 x (0.5 to 1.5) mm²
AWG		2 x (18 to 16)

Connection cross-sections of the permanently connected terminal blocks with a spring-loaded connection

The following table lists the permissible conductor cross-sections for the main conductor terminals of the 3RR2 current monitoring relays for analog and digital setting (size S00 and S0) with a spring-loaded connection.

Table 3-6 Permanently connected terminal block with spring-loaded connection - main conductor terminals of 3RR2 current monitoring relays

		Permanently connected terminal	
		Size S00	**Size S0**
Tool		Ø3.0 x 0.5 (3RA2908-1A)	Ø3.0 x 0.5 (3RA2908-1A)
Solid	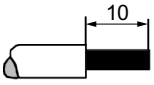	1 x (0.5 to 4) mm²	1 x (1 to 10) mm²
Finely stranded without end sleeve	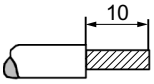	1 x (0.5 to 2.5) mm²	1 x (1 to 6) mm²

		Permanently connected terminal	
		Size S00	**Size S0**
Finely stranded with end sleeve	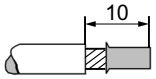	1 x (0.5 to 2.5) mm²	1 x (1 to 6) mm²
AWG		1 x (20 to 12)	1 x (18 to 8)

3.3.3 Device replacement by means of removable terminals

⚠ DANGER

Hazardous Voltage

Will cause death or serious injury.

Turn off and lock out power before working on this equipment.

The removable terminals of 3UG4 monitoring relays facilitate device replacement when necessary. The mechanical coding on the terminals prevents mix-ups.

Note

The terminals can only be dismantled in the following order due to their arrangement on the monitoring relay:

1. Lower, front terminal (A)
2. Lower, rear terminal (B)
3. Upper, front terminal (C)
4. Upper, rear terminal (D)

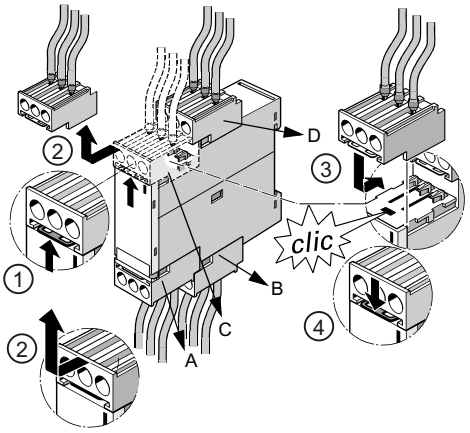

① Press the interlock in the direction of the removable terminal.

② Remove the terminal to the front.

③ / ④ Attach the new terminal and press the terminal into the device until the interlock audibly engages.

Note

The procedure is similar on devices with fewer connection terminals.

3.4 Mounting / removal

3.4.1 Mounting 3RR2 current monitoring relay

Mounting options

3RR2 current monitoring relays are matched to 3RT2 contactors and 3RF34 (size S0) solid-state contactors in terms of their electrical and mechanical features. As a result, direct mounting can be achieved easily.
Alternatively, the devices can also be installed individually in the case of stand-alone assembly or if a 3RU2 / 3RB3 overload relay is being used at the same time. The accessories required for separate mounting are described in Chapter "Terminal support for stand-alone assembly (Page 228)."

Minimum clearance

The following minimum clearances from grounded and live parts must be complied with when installing the 3RR2 monitoring relay:

- At the side: 6 mm
- Forward (on front): 6 mm

Mounting position

It can be mounted in any position.

Direct mounting on 3RT2 contactor / 3RF34 (size S0) solid-state contactor

The diagram below shows an example mounting scenario based on mounting the 3RR21 analog setting current monitoring relay, size S0, on the 3RT2 contactor.

Mounting of 3RR2 current monitoring relay, screw-type connection system (size S0)

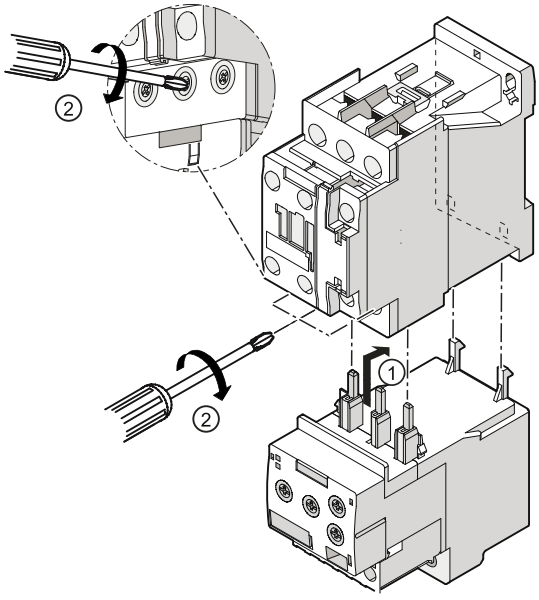

① Push the current monitoring relay into the contactor from below. Attach the two hooks on the current monitoring relay to the two openings on the rear of the contactor. This pushes the main current contacts into the corresponding terminals on the contactor.

② Tighten the screws on the contactor with a Pozidriv size 2 (S00) or Pozidriv size 3 (S0) screwdriver (tightening torque 0.8 ... 1.2 Nm).
Check that the cable is clamped tight.

Note

The connection cross-sections of the removable and permanently connected terminal blocks with screw-type connections are described in the Chapter "Screw-type connection (Page 18)".

Mounting of 3RR2 current monitoring relay, spring-loaded connection technology (size S0)

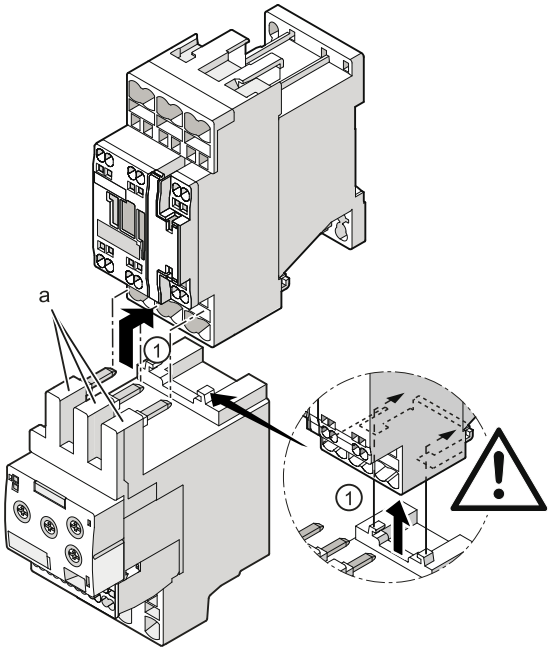

① Insert the contacts (a) into the central opening of the spring-loaded terminals on the contactor (see below, a), with the contacts flush to the right. Make sure that the guide tabs (zoom view) are inserted into the designated slots on the contactor.

The current monitoring relay will sit correctly flush with the contactor on the left- and right-hand sides.

The figures below show the openings of the main conductor terminals on the contactor (S00 and S0) into which the contacts on the current monitoring relay have to be inserted.

Main conductor terminal on the contactor (a) (S00):	**Main conductor terminal on the contactor (a) (S0):**
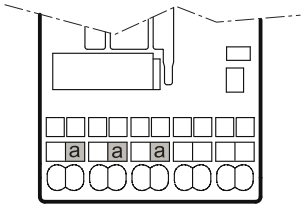	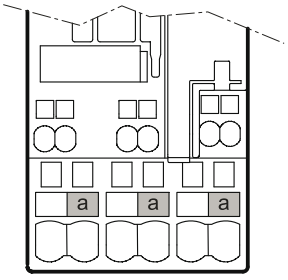

Note

Adapter for direct mounting on 3RF34 solid-state contactor

For direct mounting on a 3RF34 solid-state contactor, an additional 3RF3900-0QA88 adapter is required, which is attached to the solid-state contactor. Information is provided in the "SIRIUS solid state contactors / solid state reversing contactors" (http://support.automation.siemens.com/WW/view/en/44362244) operating instructions.

Disassembly

To disassemble the S00/S0/S2 assemblies from the DIN rail, press the contactor down and pull it toward you.

Removing the 3RR2 current monitoring relay, screw-type connection system (size S0)

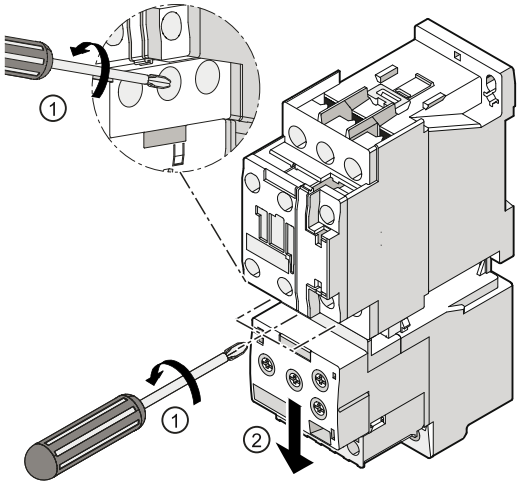

① Undo the screws on the main conductor terminals.
② Pull the current monitoring relay down and away from the contactor.

Removing the 3RR2 current monitoring relay, spring-loaded connection technology (size S00)

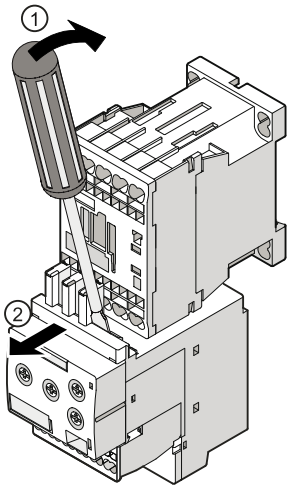

① Position the screwdriver on the current monitoring relay as shown in the figure. Carefully dislodge the current monitoring relay from the contactor.

② Pull the current monitoring relay toward you and away from the contactor.

Removing the 3RR2 current monitoring relay (size S2)

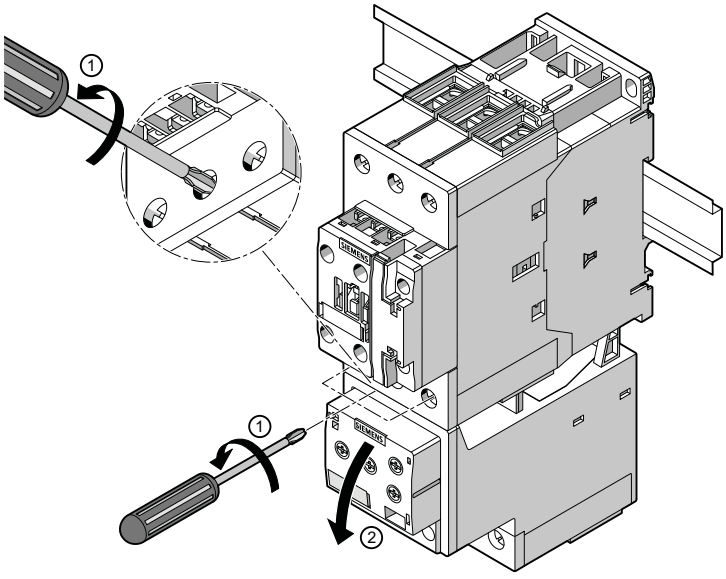

① Undo the screws on the main conductor terminals.

② Pull the current monitoring relay down and away from the contactor

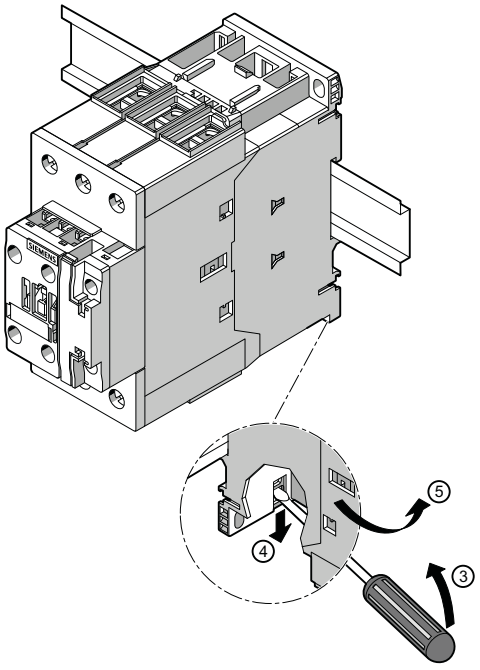

③ Push the release slide down with a screwdriver
④
⑤ Swing the contactor upwards to remove it

Separately mounted

Note

The accessories required for separate mounting are described in the Chapter "Terminal support for stand-alone assembly (Page 228)".

3.4.2 Mounting the 3UG4 monitoring relay

Mounting position

It can be mounted in any position.

Screw mounting

The illustration below shows how to screw-mount the 3UG4 monitoring relay.

Mounting the monitoring relay (screw mounting)

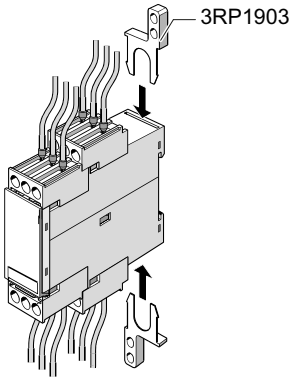

① Slide the push-in lugs into the openings on the monitoring relay at the top and bottom, and use the screwdriver to secure the device by screwing suitable screws through the holes in the push-in lugs.

Mounting onto standard rail

The illustration below shows how to mount the 3UG4 monitoring relay onto a standard rail.

Mounting the monitoring relay (mounting on and removing from standard rail)

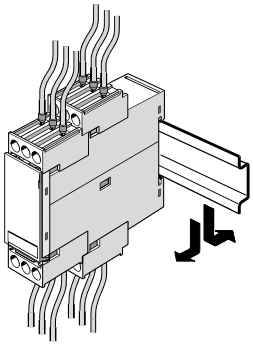

① Position the device on the top edge of the DIN rail and press it down until it snaps onto the bottom edge of the DIN rail.

To remove the device, press it down, pushing against the mounting springs, and swivel the device to remove it.

3.4.3 Installing the 3UG458. monitoring relay.

Mounting onto standard rail

The figure below shows how to install the 3UG458. insulation monitoring relay on a standard rail.

Installing the 3UG458. insulation monitoring relay (mounting onto standard rail)

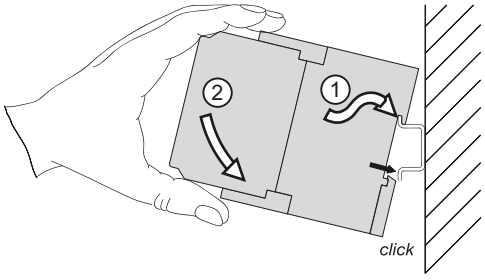

① / ② Position the device on the top edge of the DIN rail and press down until it snaps onto the bottom edge of the DIN rail.

Removing the 3UG458. insulation monitoring relay. (Removing from standard rail)

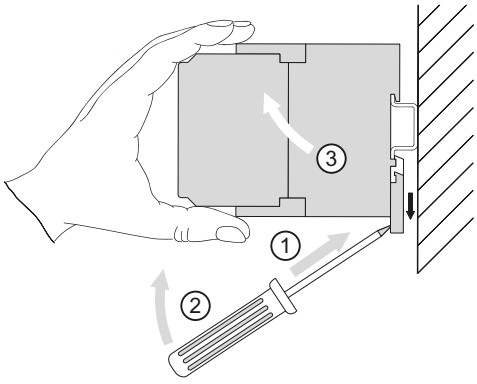

① / ② To remove, apply the screwdriver to the device and push it up with a twisting motion against the tension of the fixing spring.

③ Swing the device upwards to remove it.

Mounting onto standard rail

The figure below shows how to install the 3UG458.-.AW31 / 3UG4583-.CW31 insulation monitoring relay on a standard rail

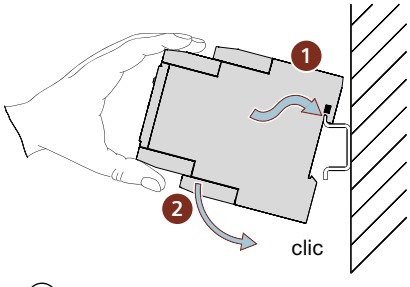

① Position the device on the top edge of the DIN rail and press it down until it snaps onto the bottom edge of the DIN rail.

②

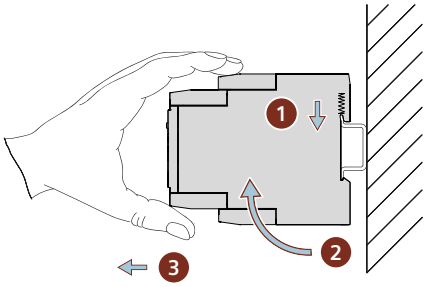

① For disassembly, press the device down and remove the device with a swiveling motion to the front.
②
③

3.5 Overview of the functions

3.5.1 3RR2 current monitoring relays

Table 3-7 Functions of the 3RR21 / 3RR22 current monitoring relays for analog and digital setting

Function	Current monitoring relay	
	3RR21	3RR22
Current monitoring		
Monitoring for undercurrent	2p	3p
Monitoring for overcurrent	2p	3p
Apparent current monitoring	✓	✓
Active current monitoring	—	✓
Range monitoring	2p	3p
Monitoring for phase failure, wire break	2p	3p
Monitoring for phase sequence	—	✓
Internal ground-fault detection (fault current monitoring)	—	✓
Blocking current monitoring	—	✓
Supply voltage		
Self-powered, without auxiliary voltage	—	—
Externally powered, with auxiliary voltage	✓	✓

✓: Function available
2p: Monitoring is 2-phase
3p: Monitoring is 3-phase
— : Function not available

3.5.2 3UG45 / 3UG46 monitoring relays

Table 3-8 Functions of the 3UG45/3UG46 monitoring relays for analog and digital setting

Function	Monitoring relays																	
	3UG45					3UG46												
	01	11	12	13	8	14	15	16	17	18	31	32	33	21	22	41	25	51
Line monitoring and voltage monitoring																		
Monitoring for phase sequence	—	✓	✓	✓	—	✓	✓	✓	✓	✓	—	—	—	—	—	—	—	—
Monitoring for phase failure	—	○ 1)	✓	✓	—	✓	✓	✓	✓	✓	—	—	—	—	—	—	—	—
Monitoring for asymmetry	—	—	10 %	20 %	—	✓	○ 2)	○ 2)	✓	✓	—	—	—	—	—	—	—	—
Monitoring for undervoltage	—	—	—	3p	—	3p	3p	3p	3p	3p	1p	1p	1p	—	—	—	—	—
Monitoring for overvoltage	—	—	—	—	—	—	3p	3p	3p	3p	1p	1p	1p	—	—	—	—	—
Monitoring for N conductor failure	—	—	—	—	—	—	—	✓	—	✓	—	—	—	—	—	—	—	—
Automatic direction of rotation correction in the case of incorrect phase sequence	—	—	—	—	—	—	—	—	✓	✓	—	—	—	—	—	—	—	—
Power factor monitoring and current monitoring																		
Monitoring for undercurrent	—	—	—	—	—	—	—	—	—	—	—	—	—	1p	1p	1p	—	—
Monitoring for overcurrent	—	—	—	—	—	—	—	—	—	—	—	—	—	1p	1p	1p	—	—
Active current monitoring	—	—	—	—	—	—	—	—	—	—	—	—	—	—	—	✓	—	—
Apparent current monitoring	—	—	—	—	—	—	—	—	—	—	—	—	—	✓	✓	—	—	—
Power factor monitoring	—	—	—	—	—	—	—	—	—	—	—	—	—	—	—	✓	—	—
Fault current monitoring/insulation monitoring																		
Monitoring for fault current/ ground fault	—	—	—	—	—	—	—	—	—	—	—	—	—	—	—	—	✓	—
Insulation monitoring	—	—	—	—	✓	—	—	—	—	—	—	—	—	—	—	—	—	—
Filling level monitoring																		
Monitoring for filling level overshoot / resistance overshoot	✓	—	—	—	—	—	—	—	—	—	—	—	—	—	—	—	—	—
Monitoring for filling level undershoot / resistance undershoot	✓	—	—	—	—	—	—	—	—	—	—	—	—	—	—	—	—	—
Speed monitoring																		
Monitoring for speed overshoot	—	—	—	—	—	—	—	—	—	—	—	—	—	—	—	—	—	✓
Monitoring for speed undershoot	—	—	—	—	—	—	—	—	—	—	—	—	—	—	—	—	—	✓
Rated control supply voltage																		
Self-powered, without auxiliary voltage	—	✓	✓	✓	—	✓	✓	✓	✓	✓	—	—	✓	—	—	✓	—	—
Externally powered, with auxiliary voltage	✓	—	—	—	✓	—	—	—	—	—	✓	✓	—	✓	✓	—	✓	✓

✓: Function available

1p: Monitoring is 1-phase

3p: Monitoring is 3-phase

— : Function not available

o : Function available with limitations

1) Detection causes problems with regenerative power recovery.

2) By monitoring the voltage thresholds.

True root mean square measurement (tRMS) / use with frequency converters:

The monitoring relays work with an electronic measuring method which calculates the actual (effective) value of a measured value (tRMS), regardless of whether the measured variable's waveform is purely sinusoidal or distorted.

The measured signal must only meet the following requirements:

- Periodic waveform (sinusoidal) within the specified frequency range
- Continuous zero crossings

As long as the line on the primary or the secondary side in the environment of a frequency converter fulfills these requirements, the monitoring relays can also be operated upstream or downstream of frequency converters. The required line quality can be ensured by using line filters/sine-wave filters where applicable. Of course, the suitability of the relevant monitoring relay for the monitored line frequencies must also be considered.

3.6 Menu-based operation

Operator controls

The digitally adjustable monitoring relays have three keys for navigating on the menu levels:

- SET key for navigating to the menu levels and for switching between the menu levels
- 2 arrow keys for setting parameters

Navigation through the menu system of the monitoring relays is explained below in a schematic diagram.
Depending on the device version and as long as no faults have occurred, one or more different measuring values ① can be displayed with the help of the arrow keys. In the event of a fault, the display indicates the type of fault ③ by means of flashing symbols. By repeatedly pressing the SET key briefly, it is possible to set the desired type of monitoring (overshoot, undershoot, or range monitoring) and parameterize the lower and/or upper threshold ② in accordance with the device-specific setting ranges. After pressing the SET key for at least 2.5 s, in a further step, the basic device parameters ④, such as the switching behavior of the output relays, the reset response in the event of a fault, and/or the tripping delay times can be set.

Menu-based operation

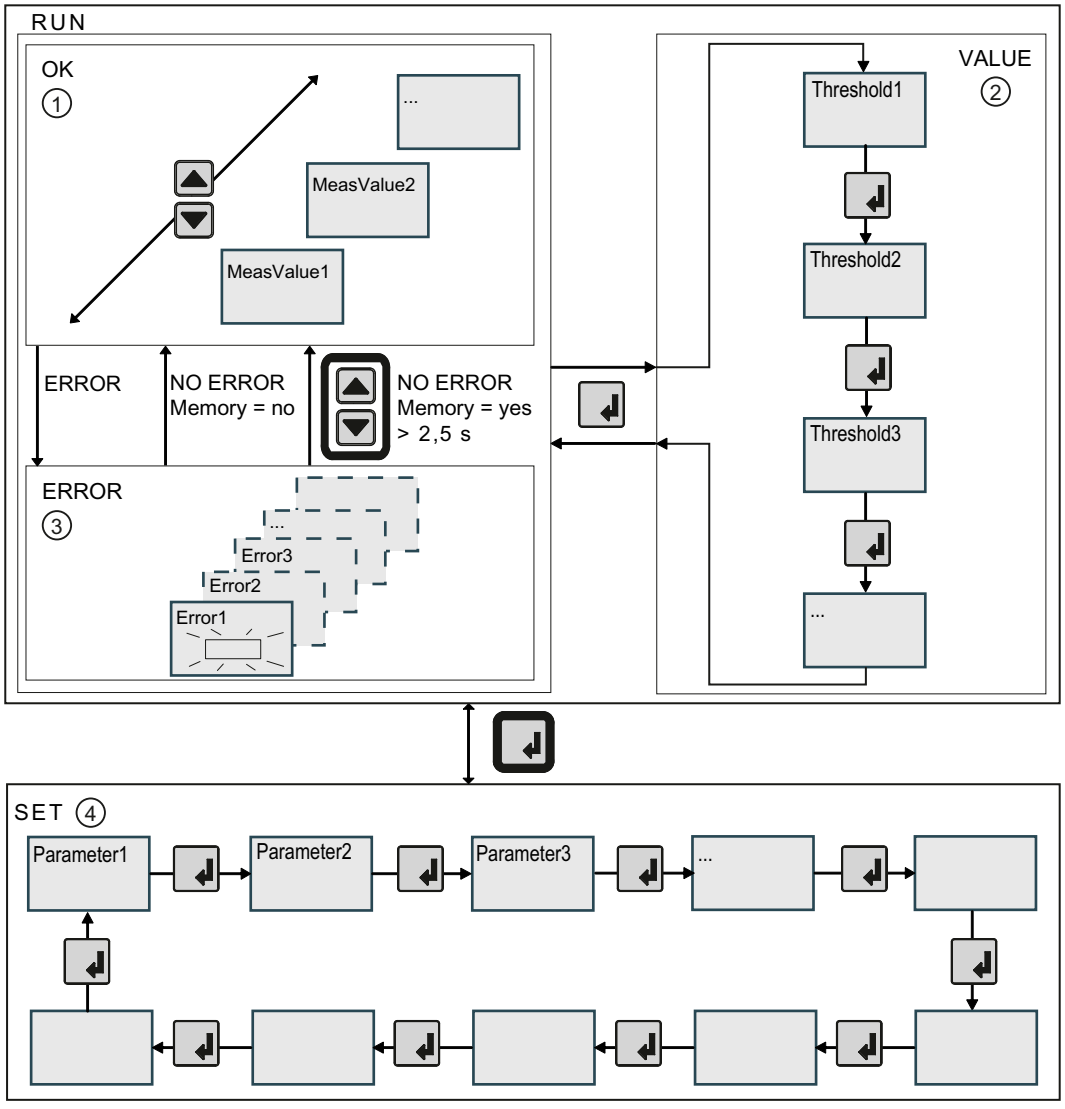

①	RUN - OK	Status display in the correct range, see below
	• Measured value1 / Measured value2 / ...	
②	RUN - VALUE	Settings of the monitored thresholds, see below
③	RUN - ERROR	Status display in the event of a fault
		If a threshold is overshot or undershot, the outputs of the monitoring relays switch over after the set delay time. The display indicates the type of error.
	• Error1 / Error2 / ...	Error detected
④	SET	Settings for basic device parameters, see below

Menu levels "RUN" and "SET"

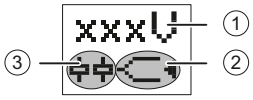

The RUN menu shows the up-to-date current measured value ①. You can use the arrow keys to change between the individual measuring values on devices with multiple outputs. In this case, the display automatically switches between the name of the measured value and the actual measured value.

② represents the selected type of monitoring (overshoot, undershoot, or range monitoring). An arrow symbol indicates whether the measuring value is within, above or below the set thresholds.

Next to this, one or two symbols ③ represent the type (changeover contact or semiconductor output) and the switching status of the outputs.

Navigation in the menu

There are basically two ways of navigating on both menu levels:

- Brief pressing the SET key (≤ 0.5 s)
  You can jump from one parameter to the next within one menu level by briefly pressing the SET key. The order is not variable.

Entry	Display at the RUN menu level	Display at the SET menu level
1.	Current measuring value (MeasValue1 / MeasValue2 / ...) or error symbol (Error1 / Error2 / Error3 / ...), switching contact symbols and monitoring methods for diagnostics	Parameter1
2.	Threshold1	Parameter2
3.	Threshold2	Parameter3
4.	Threshold3	...
5.	...	

Note

The setting options a device actually offers depends on the type and can be looked up in the relevant chapters on operation in this manual.

You can find full details of menu-based operation for the individual devices in Appendix D "Menu-based operation" (Page 291).

- Pressing and holding the SET key (> 2.5 s)
  By pressing and holding the SET key, the menu changes from RUN to SET and vice versa.
  - RUN → SET
    Menu level change can be started from any display. While the SET key is pressed, SET? appears on the display.
    After a successful change, you always arrive at the first menu item (parameter1) of the "SET" menu level.
    In the event of an error, changing to the "SET" menu level is only possible from "RUN-VALUE" ②. If an error is indicated, the SET key must be pressed first briefly (< 0.5 s).
  - SET → RUN
    You can switch menus from any of the menu commands. While the SET key is pressed, RUN? appears on the display.
    After a successful change, you arrive at current measuring value (measuringvalue1) or the current error of the RUN menu level.

Note

Aborting the menu switchover

The switchover process will be interrupted if the SET key is released while SET? or RUN? is displayed. The menu will revert to the menu command you were working with when the switch was initiated.

Note

Reset in the event of an error

To reset the device, it is necessary to press both arrow keys simultaneously for more than 2.5 s after removal of the cause of error and with Hand-RESET active. While the keys are pressed,

appears on the display.

The possible settings for resetting the devices via the "Reset response" parameter can be found in the "Operation" chapters of the relevant monitoring relays.

Note

3UG4625 residual current monitoring relays automatically return to showing the actual measured value 30 seconds after the last limit value change.

Note

Quitting the SET menu level will trigger an internal reset in 3UG4621/3UG4622/3UG4625 and 3UG4641 device variants and restart the startup delay.

3RR2 current monitoring relays

4

4.1 Product description

Overview

SIRIUS 3RR2 current monitoring relays are suitable for current monitoring of motors or other loads. They are capable of two-phase or three-phase monitoring of the rms value of AC currents, checking that the values do not overshoot or undershoot set thresholds.

SIRIUS 3RR2 current monitoring relays are available in the following variants:

- Basic version (3RR21): with analog setting using rotary buttons, two-phase monitoring and CO contact.
- Basic version (3RR22): digital setting via a display, 3-phase monitoring, CO contact, and semiconductor output; also monitors phase sequence, phase failure, ground fault and blocking current
- Version for IO-Link (3RR24): same as standard version, but additionally with IO-Link interface for direct interfacing to a PLC for remote parameterization, remote diagnostics, cyclic transfer of measured values, support of the parameter server functionality of IO-Link (with master as from specification V1.1), with integrated runtime and switching cycle counter
  You can find further information in the Manual "3UG48/3RR24 Monitoring Relays for IO-Link".

Whereas apparent current monitoring is primarily used in the rated torque range or for overload, active current monitoring can be used to observe and evaluate the degree of loading across a motor's entire torque range.

Apparent current monitoring and active current monitoring are described in more detail in the Chapter "Parameters (Page 265)".

System integration

3RR2 current monitoring relays are available in three sizes, S00, S0 and S2. 3RR2 current monitoring relays are matched to 3RT2 contactors and 3RF34 (size S0) solid-state contactors in terms of their electrical and mechanical features. They can be integrated in the feeder by means of direct mounting. This eliminates the need for the main circuit to be wired separately and no additional transformers are required.

For a stand-alone assembly or if an overload relay is being used at the same time, terminal supports for stand-alone assembly are available for separate DIN rail mounting.

3RR2 current monitoring relays were conceived for monitoring 3-phase systems.

Depending on the device version used, monitoring of 1- or 2-phase AC systems is possible with the following wiring variants:

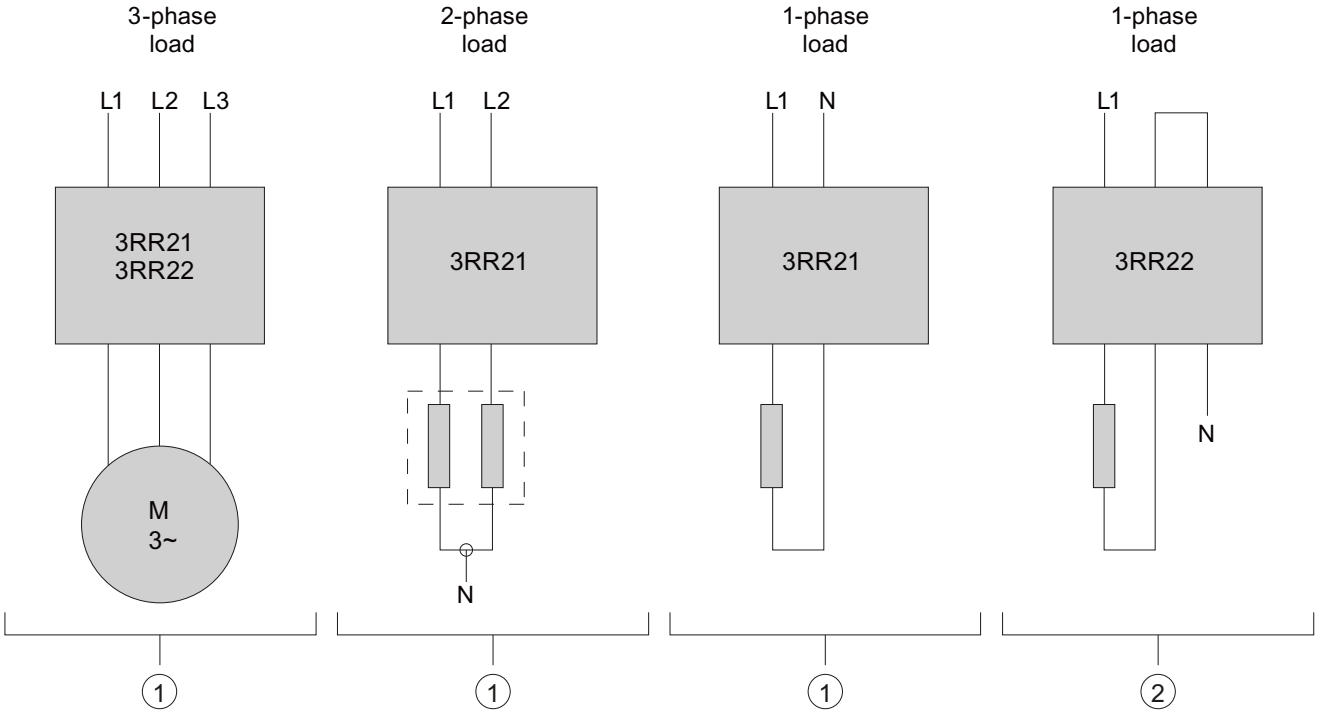

① Complete device functionality possible

② Device functionality only possible with limitations:

- Residual current monitoring not possible (→ switch off)
- Phase sequence monitoring not possible (→ switch off)
- Active current monitoring not possible (→ switch off)

Note

The monitoring functions of the 2 phases (3RR21) or the 3 phases (3RR22) are ORed to the output relay(s), i.e. a fault in one monitored phase (e.g. current violation L1) already affects the output relay(s).

Accessories

The accessories have been tailored to the current monitoring relays; they can be mounted easily and without the need for tools. The accessories are described in the Chapter "Accessories for 3RR2 current monitoring relays (Page 227)".

4.2 Application areas

The 3RR2 current monitoring relays are used, for example, in the following applications:

- Monitoring for current overshoot and current undershoot
- Monitoring for cable breaks

- Monitoring for no-load operation and load shedding (as might be the case, for example, in the event of a torn V belt)
- Underload monitoring in the lower performance range (if a pump was running in no-load operation, for example)
- Monitoring for overload (as might affect pumps with a soiled filter system, for example)
- Monitoring the performance of electrical loads such as heaters
- Monitoring for incorrect phase sequences on mobile equipment such as compressors or cranes
- Monitoring for high-impedance faults to ground (caused by damaged insulation or moisture, for example)

Table 4-1 Application areas of the 3RR2 current monitoring relays

Function	Application
• Undercurrent • Overcurrent • Apparent current • Active current (3RR22 only) • Phase failure / wire break • Phase sequence (3RR22 only) • Internal ground fault detection (fault current) (3RR22 only) • Block current (3RR22 only)	• Emergency lighting • Heating systems (electroplating plants, plastic injection machines, paintshops) • Lamps (tunnels, OR lighting, traffic lights, signal systems, UV lamps, infrared radiators, laser lamps) • Fan • Pumps • Sawing system • Conveyor belt • Surface grinding machine • Breaking mill • Milling machine • Car wash • Lifting platform • Screw conveyor • Crane • Turning machine • Woodworking • Grain mills • Steel industry

4.3 Performance features of current monitoring relays

Table 4-2 Performance features of 3RR2 current monitoring relays with analog setting

Functions/Parameters	Current monitoring relays with analog setting		
	3RR2141-.A.30	**3RR2142-.A.30**	**3RR2143-.A.30**
Rated current	1.6 to 16 A	4 to 40 A	8 to 80 A
Frequency range	50/60 Hz AC	50/60 Hz AC	50/60 Hz AC
Supply voltage U_s	• -.AA30: 24 V AC/DC • -.AW30: 24 to 240 V AC/DC		
Monitoring for current overshoots and/or undershoots	2-phase	2-phase	2-phase
Contacts	1 CO contact	1 CO contact	1 CO contact

Table 4-3 Performance features of 3RR2 current monitoring relays with digital setting

Functions/Parameters	Current monitoring relays with digital setting		
	3RR2241-.F.30	**3RR2242-.F.30**	**3RR2243-.F.30**
Rated current	1.6 to 16 A	4 to 40 A	8 to 80 A
Frequency range	20 to 400 Hz AC	20 to 400 Hz AC	20 to 400 Hz AC
Supply voltage U_s	• -.FA30: 24 V AC/DC • -.FW30: 24 to 240 V AC/DC		
Monitoring for current overshoots and/or undershoots	3-phase	3-phase	3-phase
Contacts	1 CO contact/1 semiconductor output	1 CO contact/1 semiconductor output	1 CO contact/1 semiconductor output

4.3.1 General data

Table 4-4 General data for 3RR2 current monitoring relays

Feature	Benefit	3RR21 Basic, analog setting	3RR22 Standard, digital setting
Sizes	• The devices are matched to the dimensions, connections and technical features of the other devices in the SIRIUS modular system. • The devices permit mounting of slim-line and compact load feeders in widths of 45 mm (S00 and S0) or 55 mm (S2). • The devices make configuration easier.	S00, S0, S2	S00, S0, S2
Current range	• The devices are matched to the other devices in the SIRIUS modular system • Just 1 option per size with a wide setting range makes configuration easy.	S00: 1.6 to 16 A S0: 4.0 to 40 A S2: 8.0 to 80 A	S00: 1.6 to 16 A S0: 4.0 to 40 A S2: 8.0 to 80 A

You can find further technical information on 3RR24 in the Manual "3UG48/3RR24 monitoring relays for IO-Link (http://support.automation.siemens.com/WW/view/en/54375430)" on the internet.

4.3.2 Properties

Table 4-5 Equipment of 3RR2 current monitoring relays

Feature	Benefit	3RR21 Basic, analog setting	3RR22 Standard, digital setting
Reset function	• Enables manual or automatic resetting of the monitoring relay • Resetting directly on the device or by disconnecting and reconnecting the supply voltage (remote reset)	✓	✓
ON-delay time	• Enables motor starting without evaluation of the starting current • Can be used to monitor motors with lengthy startup	0 s to 60 s	0 to 99 s
Tripping delay time	• Prevents frequent warnings and disconnection in response to currents in the vicinity of the thresholds • Permits brief violations of thresholds during operation	0 s to 30 s	0 s to 30 s
Operating and indicating elements	• For setting thresholds and delay times • For selectable functions • For fast and selective diagnostics • Display for permanent indication of measured values	LEDs and rotary buttons	Display and buttons
Integrated contacts	• Allow the system or process to be shut down in the event of an irregularity • Can be used to output signals	1 CO contact	1 CO contact 1 semiconductor output

4.3.3 Configuration of load feeders

Table 4-6 Load feeders with 3RR2 current monitoring relays

Feature	Benefit	3RR21 Basic, analog setting	3RR22 Standard, digital setting
Short-circuit-proof up to 100 kA at 690 V (in conjunction with the appropriate fuses or the appropriate motor starter protector)	• Provides optimum protection of the loads and operating personnel in the event of short circuits due to insulation faults or faulty switching operations	✓	✓
Electrical and mechanical matching to 3RT2 contactors	• Simplifies configuration • Reduces connection outlay and costs • Enables stand-alone assembly as well as space-saving direct mounting	✓	✓
Spring-loaded connection system for main circuit (option) and auxiliary circuit (option)	• Enables fast connections • Ensures that connections are vibration-resistant • Enables maintenance-free connections	✓	✓

4.3.4 Combinations with 3RT20 contactor

Monitoring relay type	Current range	3RT20 1 S00 contactors 3/4/5.5/7.5 kW	3RT20 2 S0 contactors 5.5/7.5/11/15/18.5 kW	3RT20 3 S2 contactors 18.5/22/30/37 kW
3RR2141	1.6 to 16 A	✓	X	X
3RR2241	1.6 to 16 A	✓	X	X
3RR2142	4.0 to 40 A	X	✓	X
3RR2242	4.0 to 40 A	X	✓	X
3RR2143	8.0 to 80 A	X	X	✓
3RR2243	8.0 to 80 A	X	X	✓

X = with stand-alone assembly support

You can find further technical information on 3RR24 in the Manual "3UG48/3RR24 monitoring relays for IO-Link (http://support.automation.siemens.com/WW/view/en/54375430)" on the internet.

4.4 3RR21 current monitoring relays

4.4.1 Operator controls and connection terminals

Front view / terminal labeling (basic version)

Front view	Description	
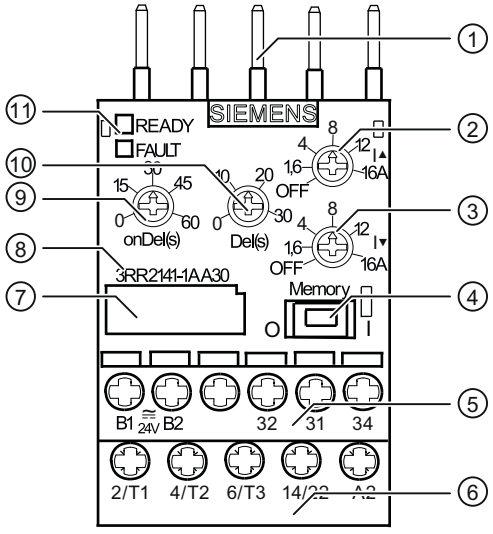	**Position digits**	
	①	Connection for contactor mounting or for stand-alone assembly
	②	Rotary button for setting the threshold for overshoot "I▲"
	③	Rotary button for setting the threshold for undershoot "I▼"
	④	Sliding switch "Memory" for selecting the reset response parameter (manual/autoreset):
	⑤	Control circuit terminal (removable): The control circuit can be connected using either the screw-type or the spring-loaded connection system.
	⑥	Main circuit terminal (permanently connected) : The main circuit can be connected using either the screw-type or the spring-loaded connection system.
	⑦	Label (below which there is a DATAMatrix code)
	⑧	Device article number
	⑨	Rotary button for startup delay time "onDel (s)"
	⑩	Rotary button for tripping delay time "Del (s)"
	⑪	Status display via "Ready" LEDs (green) for auxiliary voltage and "Fault" (red) for switching state

You can find more information on the connection terminals and the permissible conductor cross-sections in Chapter "Connection methods (Page 18)".

You can find information on connecting in Chapter "Circuit diagrams (Page 54)".

Terminal labels and notes on the protection of device connections

B1	Supply voltage ~ / +	Observe the relevant standards and regulations for the configuration of control panels and the parts and components contained therein, e.g. when dimensioning the cables. Select a current-limiting power supply, for example, to protect these circuits. When selecting the source and the connecting cable, observe the load characteristics of the current monitoring relay. The same applies to the selection of suitable protection devices. You can find all the technical data of the product in the Siemens Industry Online Support (https://support.industry.siemens.com/cs/ww/en/ps/16205/td). Further recommendations, e.g. the use of miniature circuit breakers or equipment circuit breakers in control circuits, can be found under the following link: Practical tip for control panels: Selecting and dimensioning suitable power supplies quickly and reliably. (https://new.siemens.com/global/en/markets/panel-building/tipps/design-and-engineering-in-the-control-circuit.html)
B2	Supply voltage ~ / -	
32	Output relay K1 changeover contact NC contact	You can find technical data of the product in the Siemens Industry Online Support (https://support.industry.siemens.com/cs/ww/en/ps/16205/td).
31	Output relay K1 changeover contact root	
34	Output relay K1 changeover contact NO contact	
2/T1	Main circuit terminals	For information on the protection of the main circuit of the 3RT2. contactors used, refer to the Equipment Manual - SIRIUS Contactors / Contactor Combinations 3RT (https://support.industry.siemens.com/cs/ww/en/view/60306557) and the technical data sheet (https://support.industry.siemens.com/cs/ww/en/ps/16132/td).
4/T2		
6/T3		
14 / 22	Feed-through contactor auxiliary switch (S00)	For information on the protection of the auxiliary contacts of the 3RT2. contactors used, refer to the Equipment Manual - SIRIUS Contactors / Contactor Combinations 3RT (https://support.industry.siemens.com/cs/ww/en/view/60306557) and the technical data sheet (https://support.industry.siemens.com/cs/ww/en/ps/16132/td).
A2	Feed-through contactor coil terminal (S00)	For information on the protection of 3RT2. contactor coils, refer to the Equipment Manual - SIRIUS Contactors / Contactor Combinations 3RT (https://support.industry.siemens.com/cs/ww/en/view/60306557) and the technical data sheet (https://support.industry.siemens.com/cs/ww/en/ps/16132/td).

4.4.2 Function

General functionality

Depending on the setting, the current monitoring relays monitor an AC load current that flows through terminals 1/L1 - 2/T1 and 3/L2 - 4/T2 of the device for **overshoot** (I▲) or **undershoot** (I▼) or in **range monitoring** (I▲ and I▼ ≠ OFF).

Depending on their design, the current monitoring relays are powered with a 24 V AC/DC or 24 to 240 V AC/DC supply voltage through terminals B1/B2.

With two-phase apparent current monitoring, one changeover output, and analog adjustment, the 3RR214.-.A.30 (basic-version) current monitoring relays provide a high level of monitoring reliability particularly in the rated and overload ranges.

The switching states of the output relay are given below in the section entitled "Function diagrams."

Cable break detected

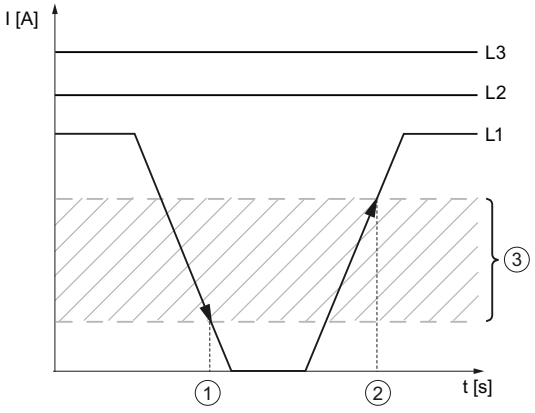

① Cable break detected
② No cable break
③ Hysteresis cable break:
- S00: 1.2 A to 1.6 A
- S0: 3.0 A to 4.0 A
- S2: 6.0 A to 8.0 A

Figure 4-1 Diagram of cable break

If a cable break (zero current in branch circuit 1/L1 - 2/T1 or 3/L2 - 4/T2) is detected (time ①), all running delay times are aborted, the red FAULT LED flashes rapidly and the CO contact immediately changes its switching state.

When a defined current flow returns to both branch circuits (1/L1 - 2/T1, 3/L2 - 4/T2) (time ②), the CO contact responds according to the defined settings.

If Memory = I, the tripping state is saved.

If the unmonitored phase 5/L3 - 6/T3 fails, this can be detected if a motor is connected by an increase in current in both phases 1/L1 - 2/T1 and 3/L2 - 4/T2.

Function diagrams

	Memory = O: O▮□I	**Memory = I:** O□▮I
I▲ I▼ = Off	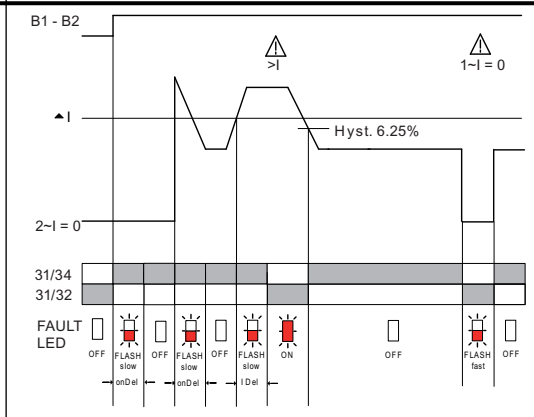	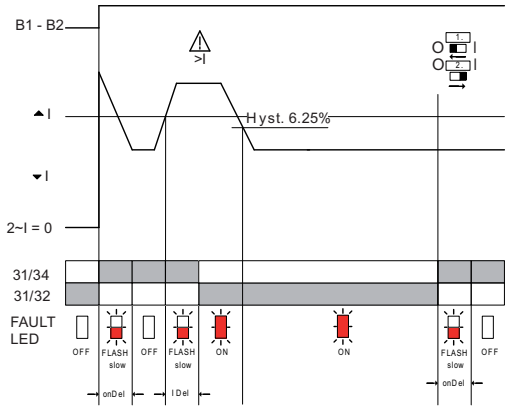
I▲ = Off I▼	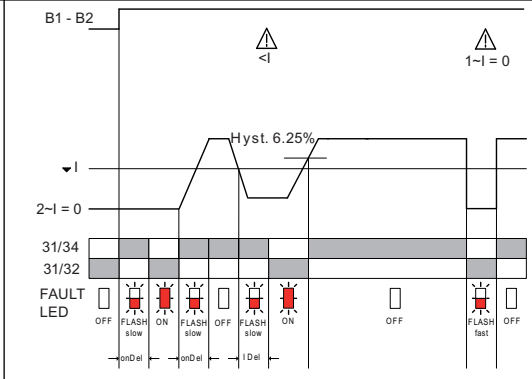	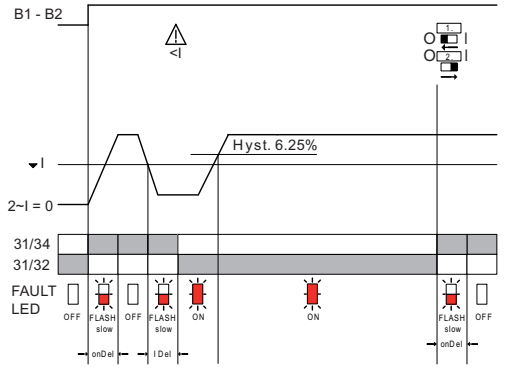
I▲ I▼	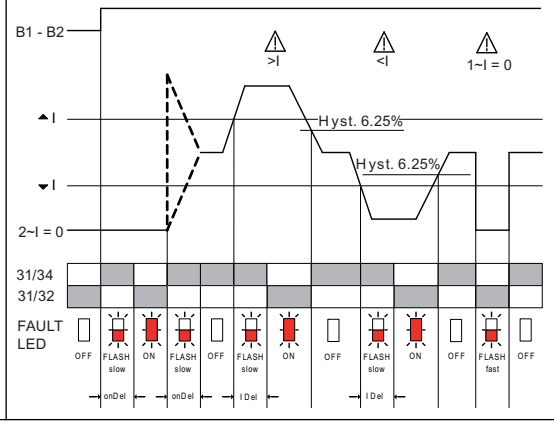	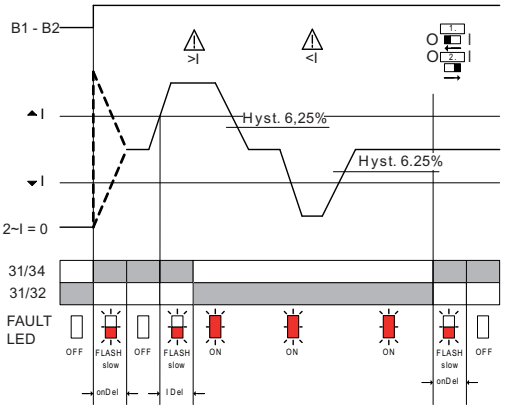

4.4.3 Operation

Parameters

The following parameters can be set on the relevant rotary button using a screwdriver:

Table 4-7 Parameter information, 3RR21 current monitoring relays with analog setting

Parameters	Control element [5]	Setting range		Increment	Factory setting
		Minimum value	Maximum value		
ON-delay time (onDel)	9	0 s	60 s	Continuous	0 s
Tripping delay time (Del)	10	0 s	30 s	Continuous	0 s
Threshold for current overshoot (I▲)	2	1.6 A or OFF[1] 4 A or OFF[2] 8 A or OFF[3]	16 A[1] 40 A[2] 80 A[3]	Continuous	8 A[1] 20 A[2] 40 A[3]
Threshold for current undershoot(I▼)	3	1.6 A or OFF[1] 4 A or OFF[2] 8 A or OFF[3])	16 A[1] 40 A[2] 80 A[3])	Continuous	Disabled
Reset response (Memory)	4	0 = automatic rest	1 = manual reset [4]	--	Automatic reset

[1] current monitoring relay 3RR2141-.A.30

[2] current monitoring relay 3RR2142-.A.30

[3] current monitoring relay 3RR2143-.A.30

[4] a stored fault condition can be reset by briefly switching to Memory = 0 or by switching off the supply voltage.

[5] The position digits refer to the front view in the Chapter "Operator controls and connection terminals (Page 49)."

Hysteresis

The hysteresis is set to a fixed value of 6.25% of the set threshold.

Changes to settings of threshold for current overshoot (I▲) and threshold for current undershoot (I▼)

Note

Deactivating monitoring

If both threshold values are deactivated (OFF), the following will no longer be monitored:

- Current overshoot
- Current undershoot

The following parameters continue to be monitored:

- Phase failure

The parameters are described in the Chapter "Parameters (Page 265)".

Required tools

The same screwdriver can be used to set the parameters as for mounting the current monitoring relays.

4.4.4 Diagnostics

Status display

On the current monitoring relay with analog setting, two status LEDs indicate the operating state:

- FAULT (red)
- READY (green)

Display	Meaning
FAULT off	Measured value is within range limits
FAULT steady on	Device has tripped
FAULT flashes at 1 Hz	Delay time is running
FAULT flashes at 4 Hz	Cable break/phase failure detected
READY off	Voltage is not applied at B1 - B2
READY on	Voltage is applied at B1 - B2

You can find more information about the LED display response in the Chapter "Function (Page 50)."

4.4.5 Circuit diagrams

Internal circuit diagrams 3RR21

3RR2141-1A.30 current monitoring relay

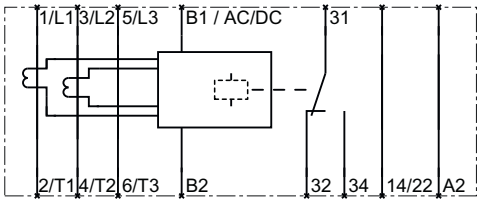

Figure 4-2 1 CO contact, 2-phase

3RR2141-2A.30, 3RR2142-.A.30, 3RR2143-.A.30 current monitoring relays

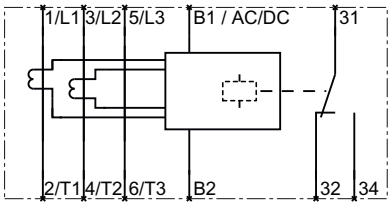

Figure 4-3 1 CO contact, 2-phase

4.4.6 Technical data

Technical data sheet

You can also find the technical data of the product at Siemens Industry Online Support (https://support.industry.siemens.com/cs/ww/en/ps/16205/td).

1. Enter the full article number of the desired device in the "Product" field, and confirm with the Enter key.
2. Click the "Technical data" link.

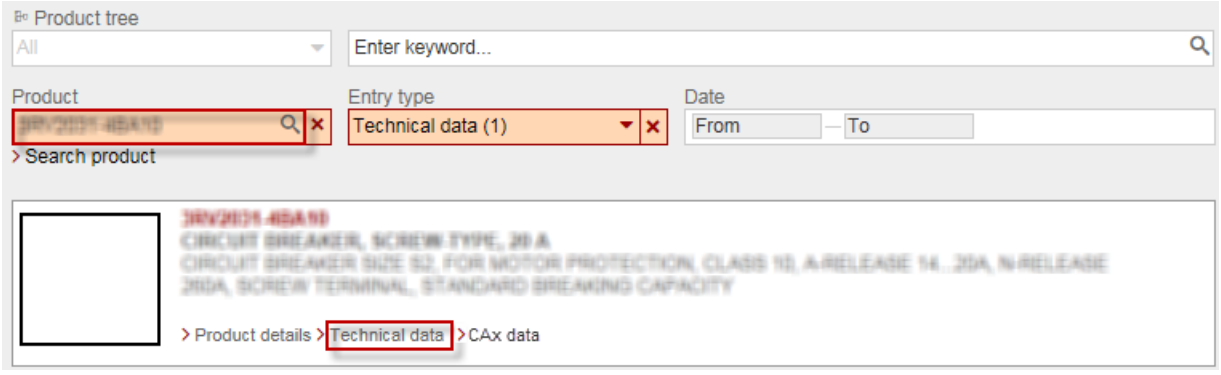

4.5 3RR22 current monitoring relays

4.5.1 Operator controls and connection terminals

Front view / terminal labeling (standard version)

Front view	Description	
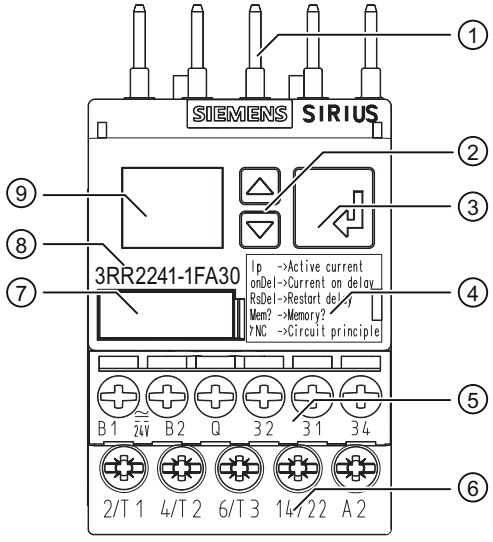	**Position digits**	
	①	Connection for contactor mounting or for stand-alone assembly
	②	Arrow keys for menu navigation
	③	SET key for menu navigation
	④	Legend for menu
	⑤	Control circuit terminal (removable): The control circuit can be connected using either the screw-type or the spring-loaded connection system.
	⑥	Main circuit terminal (permanently connected): The main circuit can be connected using either the screw-type or the spring-loaded connection system.
	⑦	Label
	⑧	Device article number
	⑨	Display for parameterization, actual-value indication, and diagnostics

You can find more information on the connection terminals and the permissible conductor cross-sections in Chapter "Connection methods (Page 18)".

You can find information on connecting in Chapter "Circuit diagrams (Page 63)".

Terminal labels and notes on the protection of device connections

B1	Supply voltage ~ / +	Observe the relevant standards and regulations for the configuration of control panels and the parts and components contained therein, e.g. when dimensioning the cables. Select a current-limiting power supply, for example, to protect these circuits. When selecting the source and the connecting cable, observe the load characteristics of the current monitoring relay. The same applies to the selection of suitable protection devices. You can find all the technical data of the product in the Siemens Industry Online Support (https://support.industry.siemens.com/cs/ww/en/ps/16205/td). Further recommendations, e.g. the use of miniature circuit breakers or equipment circuit breakers in control circuits, can be found under the following link: Practical tip for control panels: Selecting and dimensioning suitable power supplies quickly and reliably. (https://new.siemens.com/global/en/markets/panel-building/tipps/design-and-engineering-in-the-control-circuit.html)
B2	Supply voltage ~ / -	
Q	Semiconductor output, e.g. for pre-warning threshold	You can find technical data of the product in the Siemens Industry Online Support (https://support.industry.siemens.com/cs/ww/en/ps/16205/td).

32	Output relay K1 CO contact NC contact, e.g. for alarm threshold	You can find technical data of the product in the Siemens Industry Online Support (https://support.industry.siemens.com/cs/ww/en/ps/16205/td).
31	Output relay K1 CO contact root, e.g. for alarm threshold	
34	Output relay K1 CO contact NO contact, e.g. for alarm threshold	
2/T1	Main circuit terminals	For information on the protection of the main circuit of the 3RT2. contactors used, refer to the Equipment Manual - SIRIUS Contactors / Contactor Combinations 3RT (https://support.industry.siemens.com/cs/ww/en/view/60306557) and the technical data sheet (https://support.industry.siemens.com/cs/ww/en/ps/16132/td).
4/T2		
6/T3		
14 / 22	Feed-through contactor auxiliary switch (S00)	For information on the protection of the auxiliary contacts of the 3RT2. contactors used, refer to the Equipment Manual - SIRIUS Contactors / Contactor Combinations 3RT (https://support.industry.siemens.com/cs/ww/en/view/60306557) and the technical data sheet (https://support.industry.siemens.com/cs/ww/en/ps/16132/td).
A2	Feed-through contactor coil terminal (S00)	For information on the protection of 3RT2. contactor coils, refer to the Equipment Manual - SIRIUS Contactors / Contactor Combinations 3RT (https://support.industry.siemens.com/cs/ww/en/view/60306557) and the technical data sheet (https://support.industry.siemens.com/cs/ww/en/ps/16132/td).

4.5.2 Function

General functionality

Depending on its setting, the plant is monitored for **overshoot** (I▲ CO contact, I!▲ semiconductor output) or **undershoot** (I▼ CO contact, I!▼ semiconductor output) or for a **range** (I▲ , I!▲ and I▼ , I!▼ ≠ OFF).

Depending on their design, the current monitoring relays are powered with a 24 V AC/DC or 24 to 240 V AC/DC supply voltage through terminals B1/B2.

If the power supply is switched on, the CO contact and the semiconductor output responds after expiry of the set ON-delay time (onDel) on the set circuit principle (closed-circuit principle NC or open-circuit principle NO).

The 3RR224.-.F.30 current monitoring relays with digital setting (standard variations) monitor the AC load current (apparent current I_s or active current I_p) that flows through the 1/L1 - 2/T1, 3/L2 - 4/T2 and 5/L3 - 6/T3 device terminals. The monitoring relay has two separate outputs, which respond to separately settable thresholds.

The devices support further diagnostic options such as **residual current monitoring** and **phase sequence monitoring**, and are also be used to monitor motors even below the rated torque. The monitoring relays have an additional separate semiconductor output, an actual-value display, and support digital adjustment.

The 3RR22 current monitoring relays have a display and are parameterized with three keys.

You will find the adjustment ranges and factory settings of the available parameters in Chapter "Operation (Page 60)".

You can find a description of the individual parameters in Chapter "Parameters (Page 265)".

You will find the switching states of the output relay below in the Section "Function diagrams" and in the Chapter "Diagnostics (Page 62)."

Reset response

If the device is set to automatic reset, the CO contact and the semiconductor output will respond once a previously occurring error has been dealt with and the reclosing delay time has elapsed. A previously occurring error is, therefore, not saved.

If manual RESET is selected, the CO contact remains in the current switching state even if a previously occurring error has been dealt with.

This saved fault condition can be reset by pressing both arrow keys at the same time for longer than 2.5 s or by disconnecting and reconnecting the auxiliary voltage.

Note

Semiconductor output

The semiconductor output always responds in automatic reset.

Cable break detected

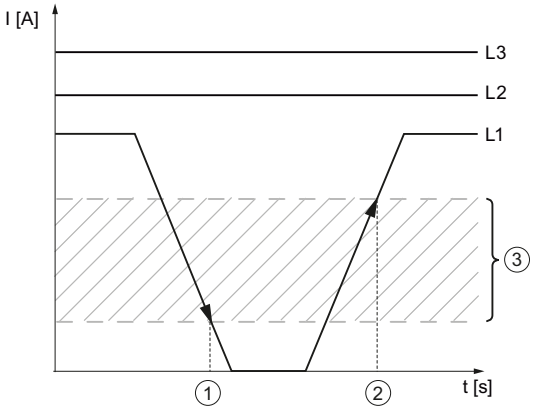

① Cable break detected

② No cable break

③ Hysteresis cable break:
- S00: 1.2 A to 1.6 A
- S0: 3.0 A to 4.0 A
- S2: 6.0 A to 8.0 A

Figure 4-4 Cable break

If a cable break is detected in a branch circuit (time ①), all delay times which are running (onDel, RsDel, Del) are aborted and both the CO contact and the semiconductor output change their switching state immediately (≤ 200 ms).

When a defined current flow returns to all branch circuits (1/L1 - 2/T1, 3/L2 - 4/T2 und 5/L3 - 6/T3) (time ②), the CO contact and the semiconductor output respond again according to the defined settings.

If manual RESET (Mem = yes) is selected, the tripping state is saved.

Function diagrams

Display	Memory = no Relay switching behavior = NC (closed-circuit principle)	Memory = no Relay switching behavior = NO (open-circuit principle)
I▲ / I!▲ I▼ / I!▼ = Off n x I▲	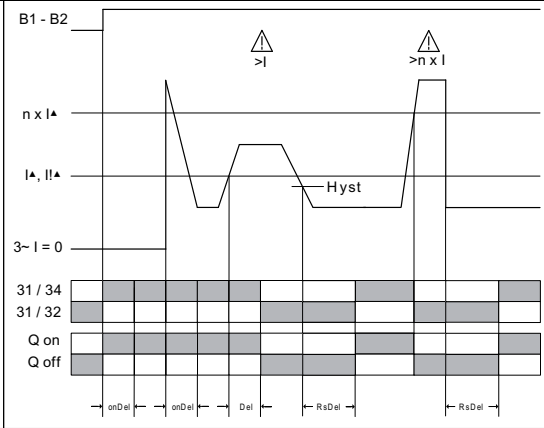	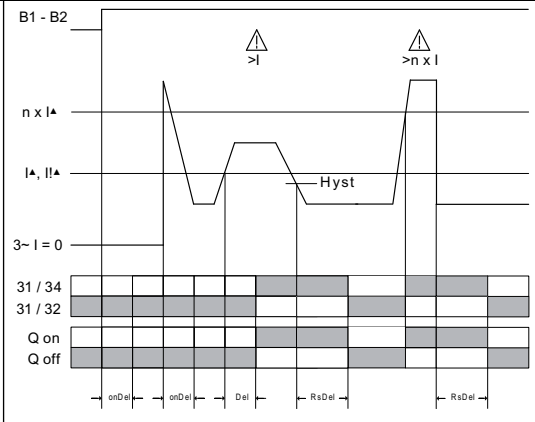
I▲ / I!▲ = Off I▼ / I!▼ I >> ⏚ = yes	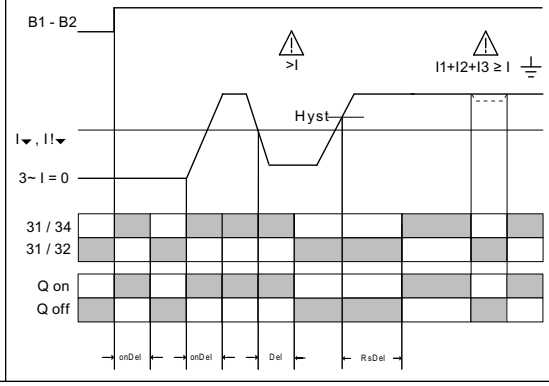	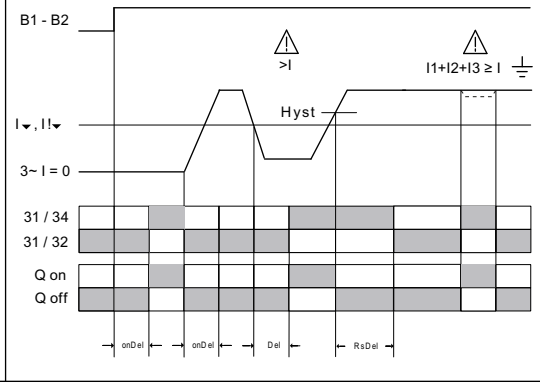

Display	Memory = no Relay switching behavior = NC (closed-circuit principle)	Memory = no Relay switching behavior = NO (open-circuit principle)
I▲ / I!▲ = Off I▼ / I!▼	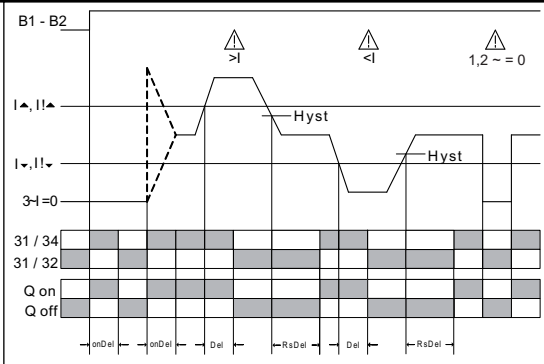	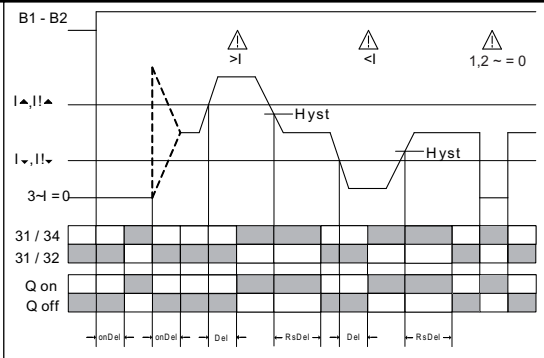
= yes	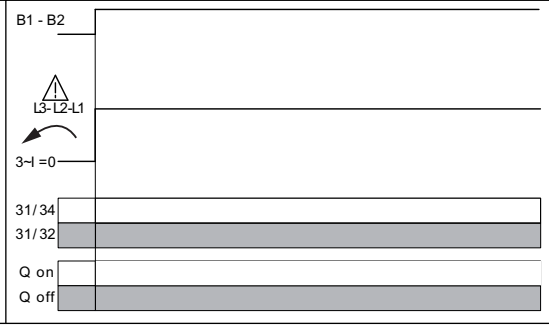	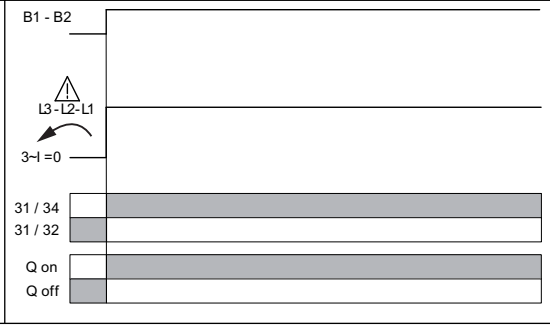

4.5.3 Operation

Parameters

Parameterization of the devices is possible locally using the display and the three keys.

Parameter information

The table below shows the settable parameter information of the 3RR22 current monitoring relay with digital setting:

Table 4-8 Parmeter information, 3RR22 current monitoring relays with digital setting

Menu level	Parameters	Setting range		Increment	Factory setting
		Minimum value	Maximum value		
"RUN"	Threshold for current undershoot(I▼)	1.6 A or OFF[1)] 4 A or OFF[2)] 8 A or OFF[3)]	16 A[1)] 40 A[2)] 80 A[3)]	0.1 A[1)] 0.1 A[2)] 0.2 A[3)]	1.6 A[1)] 4 A[2)] 8 A[3)]
"RUN"	Threshold for current overshoot (I▲)	1.6 A[1)] 4 A[2)] 8 A[3)]	16 A or OFF[1)] 40 A or OFF[2)] 80 A or OFF[3)]	0.1 A[1)] 0.1 A[2)] 0.2 A[3)]	3 A[1)] 8 A[2)] 16 A[3)]
"RUN"	Warning threshold for current undershoot (I!▼)	1.6 A or OFF[1)] 4 A or OFF[2)] 8 A or OFF[3)]	16 A[1)] 40 A[2)] 80 A[3)]	0.1 A[1)] 0.1 A[2)] 0.2 A[3)]	1.6 A[1)] 4 A[2)] 8 A[3)]
"RUN"	Warning threshold for current overshoot (I!▲)	1.6 A[1)] 4 A[2)] 8 A[3)]	16 A or OFF[1)] 40 A or OFF[2)] 80 A or OFF[3)]	0.1 A[1)] 0.1 A[2)] 0.2 A[3)]	3 A[1)] 8 A[2)] 16 A[3)]
"SET"	Hysteresis (Hyst)	0.1 A[1)] 0.1 A[2)] 0.2 A[3)]	3.0 A[1)] 8.0 A[2)] 16.0 A[3)]	0.1 A 0.1 A[2)] 0.2 A[3)]	0.5 A[1)] 0.8 A[2)] 1.6 A[3)]
"SET"	ON-delay time (onDel)	0 s	99 s	1 s	0 s
"SET"	Tripping delay time (Del)	0 s	30 s	1 s	0 s
"SET"	Reclosing delay time (RsDel)	0 min.	300 min.	1 min.	0 min.
"SET"	Blocking current monitoring (n x I▲)	no x I▲	5 x I▲	1 x I▲	no x I▲
"SET"	Residual current monitoring (I >>⏚)	no or yes		--	no
"SET"	Reset response (Mem)	no = Autoreset	yes = HandRESET	--	no = Autoreset
"SET"	Phase sequence monitoring (↷)	no or yes		--	no
"SET"	Load current monitoring (apparent current I_s/active current I_p)	I_s or I_p		--	I_s
"SET"	Relay switching behavior (closed-circuit principle NC / open-circuit principle NO)	NC or NO		--	NC

[1)] 3RR2241 current monitoring relay

[2)] 3RR2242 current monitoring relay

[3)] 3RR2243 current monitoring relay

Note

The "current overshoot" or "current undershoot" monitoring mode is defined with the setting OFF for the upper and lower threshold.

Note

Deactivating monitoring

If the upper and lower threshold values are deactivated (OFF), monitoring will cease for:

- Current overshoot
- Current undershoot
- Blocking current

The following parameters continue to be monitored:

- Fault current (if activated)
- Incorrect phase sequence (if activated)
- Phase failure

The up-to-date measured value is displayed permanently.

The parameters are described in the Chapter "Parameters (Page 265)".

Menu-based operation is described in the Chapter "Menu-based operation (Page 37)".

4.5.4 Diagnostics

Display information

The display is divided into three different areas.

① Current measured value or fault symbol
② Type of monitoring
③ Symbols for the semiconductor contact (left) and the CO contact (right)

Meaning of the information on the display

Note

Indications in the event of a fault

The symbols on the display flash to indicate an error.

The following statuses and faults are indicated on the display as a diagnostics message with flashing symbols:

Display area	Symbol	Meaning
①	12.5A	Displays the measured current
①	n x I▲	Flashing: Current is above the set blocking current
①	I>>	Flashing: Fault current detected
①	L	Flashing: Cable break/phase failure detected
①	!	Flashing: Incorrect phase sequence detected
②		Monitoring for current overshoot
②		Monitoring for current undershoot
②		Range monitoring (monitoring for current overshoot and current undershoot)
②	◀	Current is in correct range
②	▲	A current overshoot has occurred
②	▼	A current undershoot has occurred
③		• Not flashing: Relay contact 31/32 open, relay contact 31/34 closed • Flashing: Delay time (ON-delay or tripping delay) running • Masked out: Relay contact 31/32 closed, relay contact 31/34 open
③	Q	• Not flashing: Semiconductor output closed, supply voltage connected • Flashing: Delay time (ON-delay or tripping delay) running • Masked out: Semiconductor output open, supply voltage not switched through

You will find more information about the switching behavior of the output relays in Chapter "Function (Page 57)".

4.5.5 Circuit diagrams

Internal circuit diagrams 3RR22

3RR2241-1F.30 current monitoring relay

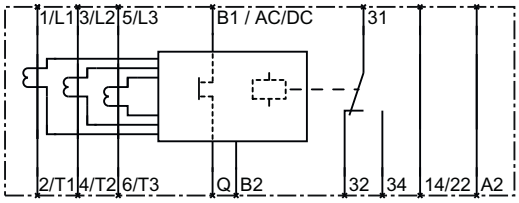

Figure 4-5 1 CO contact, 3-phase

3RR2241-2F.30, 3RR2242-.F.30, 3RR2243-.F.30 current monitoring relays

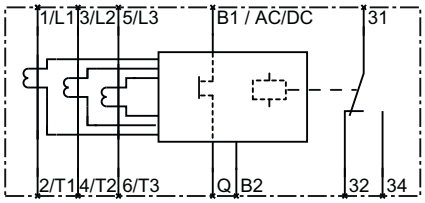

Figure 4-6 1 CO contact, 3-phase

4.5.6 Technical data

Technical data sheet

You can also find the technical data of the product at Siemens Industry Online Support (https://support.industry.siemens.com/cs/ww/en/ps/16205/td).

1. Enter the full article number of the desired device in the "Product" field, and confirm with the Enter key.
2. Click the "Technical data" link.

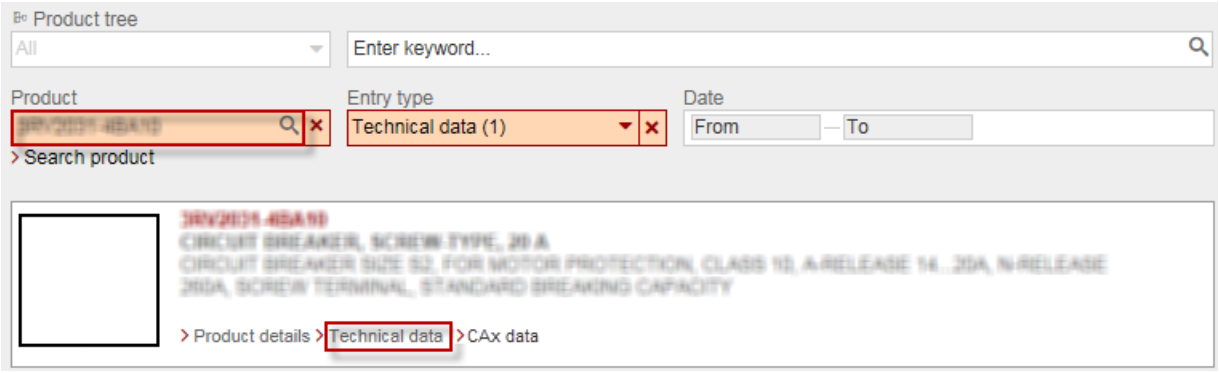

3UG4501 filling level monitoring relay

5

5.1 Application areas

Application areas

The 3UG4501 filling level monitoring relays are used, for example, in the following applications:

Table 5-1 Application areas of the 3UG4501 filling level monitoring relay

Function	Application
• One-point filling level monitoring and two-point filling level monitoring • Overflow protection • Dry-run protection • Leakage monitoring	• Open-loop control of a bilge pump, e.g. on ships or construction sites • Filling level monitoring of lubricants • Filling level monitoring of dosing containers • Filling level monitoring of oil sumps • Filling level monitoring of rainwater catchment basins • Water supply • Waste water treatment plant

5.2 Operator controls and connection terminals

Front view / terminal labeling

Front view	Description	
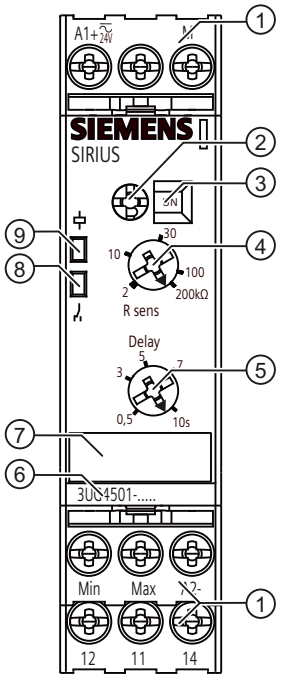	**Position digits**	
	①	Terminal block (removable): Connection is possible using screw terminals or spring-loaded terminals.
	②	Rotary button for setting the monitoring mode.
	③	Display field: drainage control (OV) or inflow control (UN)
	④	Rotary button for setting the sensor sensitivity (R sens)
	⑤	Rotary button for setting the tripping delay (Delay)
	⑥	Device article number
	⑦	Label
	⑧	Status display: LED contact symbol (yellow)
	⑨	Status display: LED coil symbol (green)
	Terminal labels	
	A1+	Rated control supply voltage ~ / +
	A2-	Rated control supply voltage ~ / -
	M (GND)	Reference point
	Min	Minimum level
	Max	Maximum level
	12	Output relay K1 CO contact NC contact
	11	Output relay K1 CO contact root
	14	Output relay K1 CO contact NO contact

You can find additional information on the connection terminals and the permissible conductor cross-sections in the Chapter "Connection methods (Page 18)".

You can find information on connecting in the Chapter "Circuit diagrams (Page 71)".

5.3 Functions

General functionality

The 3UG4501 filling level monitoring relays and the connectable 2-pole or 3-pole 3UG3207-.. probes are used to monitor the filling levels of electrically conductive liquids.

Monitoring

The working principle of the 3UG4501 filling level monitoring relay is based on measurement of the electrical resistance of the liquid between the probes (minimum and maximum level) or the reference potential (conductive measurement principle). The output relay changes its switching state if the measured value is below the sensitivity set on the front. The probes (e.g. 3UG3207-..) are powered with alternating current (AC measured current) to exclude electrolysis phenomena in the liquid.

Note

The filling level monitoring relays do not have active monitoring of probe defects or probe conductor defects. Therefore when selecting the probes and routing the cable, make sure that this source of error is precluded. For example, use stable bow probes if wire electrodes are in danger of being broken.

Depending on their design, the 3UG4501 filling level monitoring relays are powered with a 24 V AC/DC or 24 to 240 V AC/DC rated control supply voltage through terminals A1+ / A2-. When the rated control supply voltage is applied, the green LED next to the coil symbol on the device cover lights up.

Note

On the 3UG4501-.AA30 devices with 24 V AC / DC versions, as a common reference for the AC probe voltage at terminals Min and Max, terminal M must not be connected to terminals A1 / A2 of the device or grounded!

On the 3UG4501-.AW30 24 to 240 V AC / DC versions, terminals M, Min, and Max are electrically isolated from terminals A1 and A2 of the rated control supply voltage!

Note

The specified voltages represent the absolute thresholds.

Tripping delay

Tripping can be delayed by 0.5 to 10 s to avoid tripping the switching function too early when the level has not quite been reached (e.g. wave motion or foaming of the liquid).

The switching states of the output relay are given below in the section entitled "Function diagrams."

Probes for filling level monitoring

To monitor filling levels of electrically conductive liquids, the following probes can be mounted on the 3UG4501 filling level relays.

- Three-pole wire electrode
- Two-pole wire electrode
- Two-pole bow electrode
- Single-pole bow electrode for side mounting
- Single-pole rod electrode for side mounting

These necessary accessories are described in Chapter "Probes for the 3UG4501 monitoring relay (Page 233)."

Note

At the terminals, other resistance sensors in the range 2 to 200 kΩ (e.g. photoresistor, temperature sensors, resistor-based position encoders, etc.) can also be connected. The monitoring relays are therefore also suitable as resistance triggers.

Two-point monitoring

If the liquid level reaches the maximum probe while the minimum probe and reference probe are immersed, the output relay changes its switching state. The output relay reverts to its original switching state as soon as the minimum probe is no longer in contact with the liquid.

One-point monitoring

For closed loop control of only one level, the terminals for Min and Max are bridged on the filling level monitoring relay. The output relay changes its switching state as soon as the liquid level has been reached. The output relay reverts to its original switching state as soon as the probe is no longer in contact with the liquid.

Reset response

For reliable resetting, the rated control supply voltage must be interrupted at least for the set delay time of +0.5 s.

When the rated control supply voltage is interrupted, the output relay returns to the quiescent state when the power failure backup time has expired (contact 11-12 is closed, contact 11-14 is open). If the rated control supply voltage is switched on again after > 0.5 s + Delay (t) (device reset), the output relay switches depending on the set relay switching behavior.

Function diagrams 3UG4501

Drainage control (OV [1]), two-point closed-loop control	Inflow control (UN [2]), two-point closed-loop control
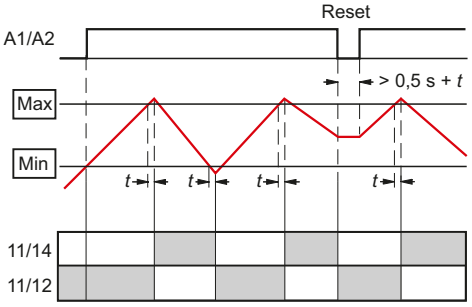	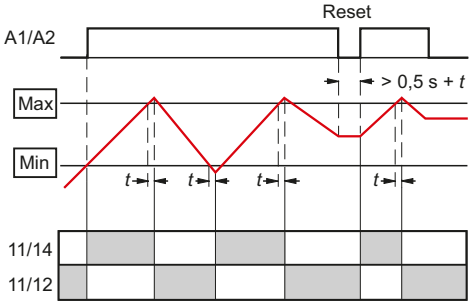

1) OV = overshoot

2) UN = undershoot

Drainage control (OV [1]), one-point closed-loop control	Inflow control (UN [2]), one-point closed-loop control
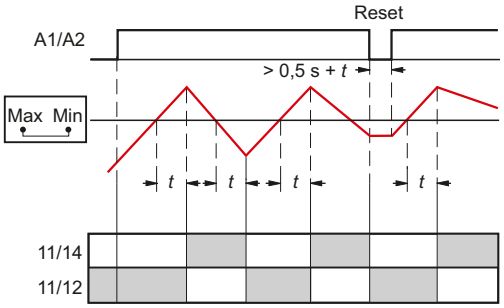	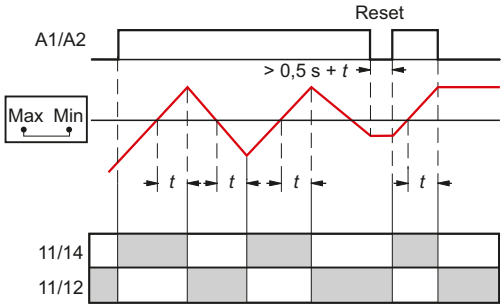

1) OV = overshoot

2) UN = undershoot

5.4 Operation

Parameters

The following parameters can be set on the relevant rotary button using a screwdriver:

Table 5-2 Parameter information, 3UG4501 filling level monitoring relay

Parameters	Operating elements [2]	Setting range		Increment
		Minimum value	Maximum value	
Monitoring mode[1]: drainage control (OV) or inflow control (UN)	3	--	--	--
Sensor sensitivity (R sens)	4	2 kΩ	200 kΩ	Continuous
Tripping delay time (Delay)	5	0.5 s	10 s	Continuous

[1] By operating the rotary button, it is possible to choose between drainage control (OV) and inflow control (UN) depending on the application (one-point control or two-point control).

[2] The position digits refer to the front view in Chapter "Operator controls and connection terminals (Page 66)."

Chapter "Circuit diagrams (Page 71)" shows the wiring examples for the different monitoring modes.

The parameters are defined in Chapter "Parameters (Page 265)."

Required tools

The same screwdriver can be used to set the parameters as for mounting the filling level monitoring relays.

5.5 Diagnostics

5.5.1 Diagnostics with LED

Depending on the liquid level, the output relay switches in accordance with its set relay switching behavior (drainage control OV, inflow control UN). If the output relay responds (contact 11-12 open, contact 11-14 closed), the yellow LED next to the contact symbol on the device cover lights up.

The switching behavior of the output relay is shown in Chapter "Functions (Page 66)."

5.6 Circuit diagrams

Internal circuit diagram

3UG4501-.A.30 level monitoring relays

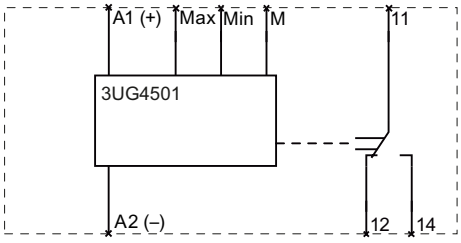

Wiring examples

Drainage control

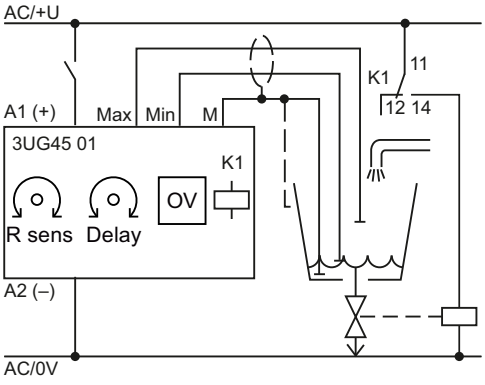

Two-step control

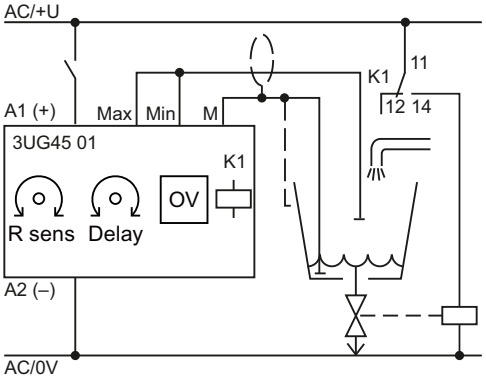

One-point closed-loop control

Inflow control

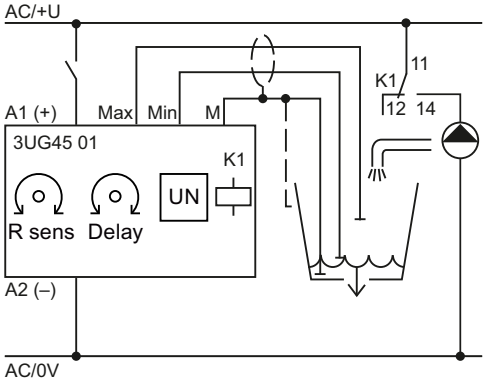

Two-step control

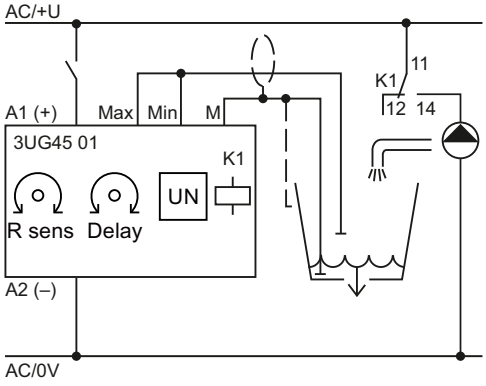

One-point closed-loop control

5.7 Technical data

Technical data sheet

You can also find the technical data of the product at Siemens Industry Online Support (https://support.industry.siemens.com/cs/ww/en/ps/16367/td).

1. Enter the full article number of the desired device in the "Product" field, and confirm with the Enter key.
2. Click the "Technical data" link.

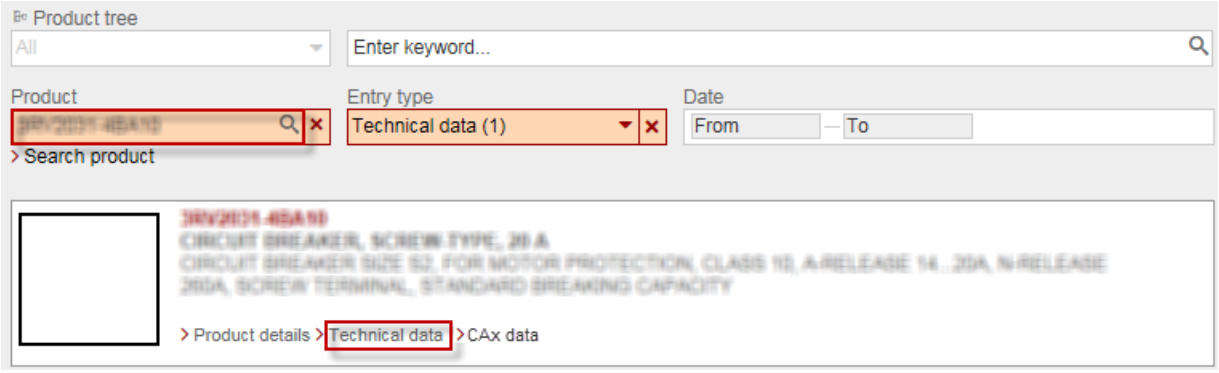

3UG4.1 line monitoring relay

6

Overview

The electronic line monitoring relays permit maximum protection for mobile machines and plants or in unstable power systems. Using the monitoring relays, line and voltage errors can be detected early and minimized.

Depending on the version, the electronic line monitoring relays monitor the following:

- Phase sequence
- Phase failure with and without neutral conductor monitoring
- Phase asymmetry
- Undervoltage and/or overvoltage

6.1 Application areas

Application areas

The various line monitoring relays are used, for example, in non-stationary systems such as refrigeration containers, construction site compressors, and cranes. The devices are used in the following application areas:

Table 6-1 Application areas of the line monitoring relays

Function	Application
Phase sequence	• Direction of rotation of the drive • Refrigeration trucks • Refrigerators • Saws • Pumps • Rollers • Transport of persons (elevators, moving staircases and walkways)
Phase failure	• A fuse has tripped • Control supply voltage failure • Cable break • Crane systems • Electrical welding • Emergency generating sets (banks, hospitals, alarm systems, power plants) • Transport of persons (elevators, moving staircases and walkways)
Phase asymmetry	• Motor protection (overheating of the motor through asymmetric voltage) • Detection of asymmetric systems
Undervoltage	• Increased current on a motor with corresponding overheating • Unintended device reset • Mains failure – particularly with battery supply • Heating systems • Cranes • Elevators • Protection on unstable systems (switchover to emergency current, monitoring of the generator)
Overvoltage	• System protection against destruction caused by supply overvoltages • Energy supply to the line • Lamps (UV lamps, laser lamps, OP lighting, tunnels, traffic lights)

6.2 3UG4511 line monitoring relay

6.2.1 Operator controls and connection terminals

Front view / terminal labeling 3UG4511

Front view	Description	
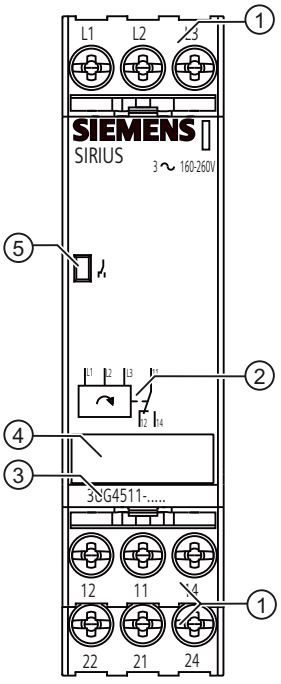	**Position digits**	
	①	Terminal block (removable) Connection is possible using screw-type terminals or spring-loaded terminals.
	②	Circuit diagram
	③	Device article number
	④	Label
	⑤	Status display: LED contact symbol (green)
	Terminal labels	
	L1, L2, L3	Rated control supply voltage
	12	Output relay K1 CO contact NC contact
	11	Output relay K1 CO contact root
	14	Output relay K1 CO contact NO contact
	22	Output relay K2 CO contact NC contact (on the 3UG4511-.B only)
	21	Output relay K2 CO contact root (on the 3UG4511-.B only)
	24	Output relay K2 CO contact NC contact (on the 3UG4511-.B only)

You can find additional information on the connection terminals and the permissible conductor cross-sections in the Chapter "Connection methods (Page 18)".

You can find information on connecting in the Chapter "Circuit diagrams (Page 77)".

6.2.2 Function

General functionality

The 3UG4511 line monitoring relays monitor the **phase sequence** in a three-phase system.

The devices are **self-powered** (measuring voltage = rated control supply voltage) and work on the closed-circuit principle. Depending on the version, the line monitoring relays are powered with a rated control supply voltage of 160 V to 260 V (3UG4511-..N20), 320 to 500 V (3UG4511-..P20) and 420 to 690 V (3UG4511-..Q20) through terminals L1 / L2 / L3.

All 3UG4511 line monitoring relays feature at least one output relay (output relay K1 CO contact). The 3UG4511-.B line monitoring relays have an additional relay (output relay K2 CO contact). Output relay K2 switches synchronously with output relay K1.

No settings are required for operation.

Note

The specified voltages represent the absolute thresholds.

Monitoring

If the correct phase sequences are applied to terminals L1-L2-L3, the output relay picks up after the response time and the "contact symbol" LED lights up green. If the phase sequence is incorrect, the output relay remains in its quiescent position. After the power system has been disconnected, the output relays drop out after the response time has expired.

Note

After failure of one phase, motors generate a reverse voltage at the terminal of the failed phase due to the regenerative power recovery. This can be up to 90 % of the line voltage in magnitude. Because the 3UG4511 line monitoring relays are not protected against reverse voltage, such a phase failure is not reliably detected.
If this type of monitoring is required, the 3UG4512 line monitoring relay should be used, for example!

You will find the switching states of the output relays below in section "Function diagrams" and in Chapter "Diagnostics (Page 77)."

Reset response

The device features an autoreset that resets the output relay to its original state after an error message and rectification of the fault that has occurred.

Function diagrams 3UG4511

Correct phase sequence	Incorrect phase sequence
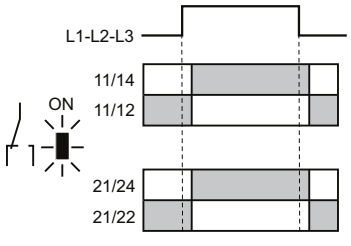	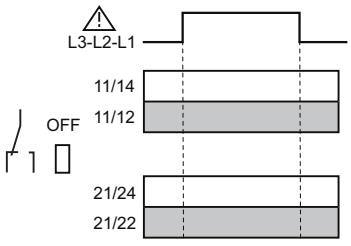

6.2.3 Diagnostics

6.2.3.1 Diagnostics with LED

Status display

The following information about the operating state is displayed on the 3UG4511 line monitoring relay:

Operating status	LED contact symbol (green)	State of the output relay 12/ 11/ 14 22/ 21/ 24
Correct phase sequence	On	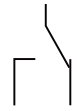
Incorrect phase sequence	Off	

You will find more information about the switching behavior of the output relays in Chapter "Function (Page 75)."

6.2.4 Circuit diagrams

Internal circuit diagrams 3UG4511

3UG4511-.A.. line monitoring relays

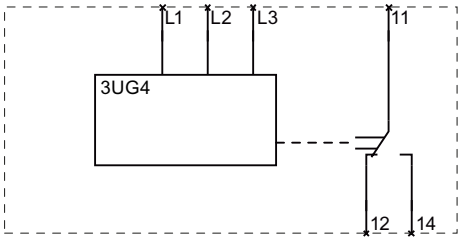

3UG4511-.B.. line monitoring relays

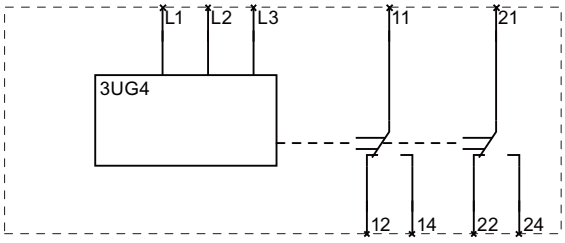

Note

It is not necessary to fuse the measuring circuit to protect the device. Fusing for line protection depends on the cross-section used.

Note

The 3UG4511 line monitoring relays are only suitable for line frequencies of 50 / 60 Hz!

6.2.5 Technical data

Technical data sheet

You can also find the technical data of the product at Siemens Industry Online Support (https://support.industry.siemens.com/cs/ww/en/ps/16367/td).

1. Enter the full article number of the desired device in the "Product" field, and confirm with the Enter key.
2. Click the "Technical data" link.

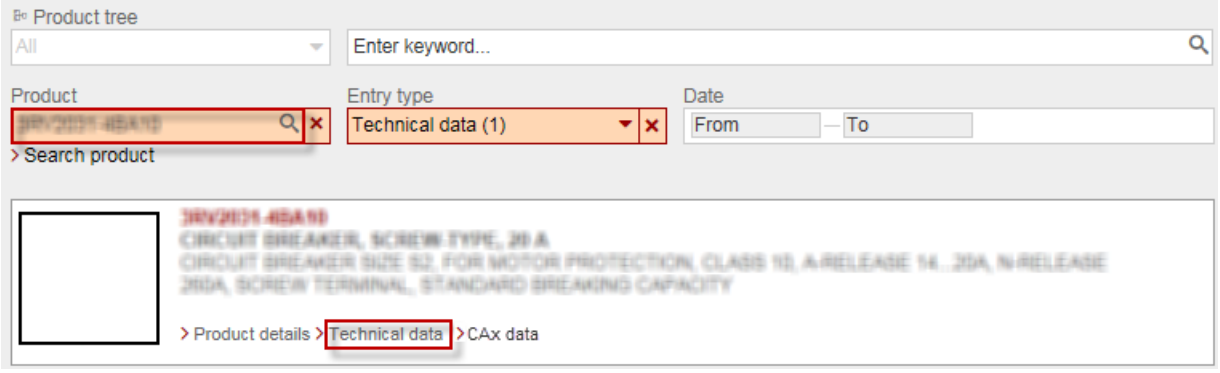

6.3 3UG4512 line monitoring relay

6.3.1 Operator controls and connection terminals

Front view / terminal labeling 3UG4512

Front view	Description	
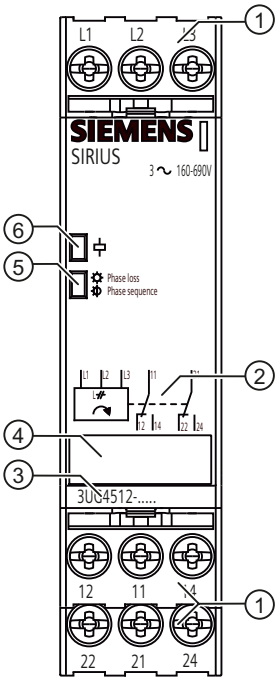	**Position digits**	
	①	Terminal block (removable) Connection is possible using screw-type terminals or spring-loaded terminals.
	②	Circuit diagram
	③	Device article number
	④	Label
	⑤	Status display: LED phase failure / phase sequence (red)
	⑥	Status display: LED coil symbol (green)
	Terminal labels	
	L1, L2, L3	Rated control supply voltage
	12	Output relay K1 CO contact NC contact
	11	Output relay K1 CO contact root
	14	Output relay K1 CO contact NO contact
	22	Output relay K2 CO contact NC contact (on the 3UG4512-.B only)
	21	Output relay K2 CO contact root (on the 3UG4512-.B only)
	24	Output relay K2 CO contact NC contact (on the 3UG4512-.B only)

You can find additional information on the connection terminals and the permissible conductor cross-sections in the Chapter "Connection methods (Page 18)".

You can find information on connecting in the Chapter "Circuit diagrams (Page 82)".

6.3.2 Function

General functionality

The 3UG4512 line monitoring relays monitor the **phase sequence** and the **phase failure** of one of the three phases in a three-phase system. The asymmetry threshold is 10 %.

The devices are **self-powered** (measuring voltage = rated control supply voltage) and work on the closed-circuit principle. The 3UG4512 line monitoring relays monitor all phases of three-phase AC networks from 160 to 690 V through terminals L1 / L2 / L3 and also draw power from all three phases simultaneously.

All 3UG4512 line monitoring relays feature at least one output relay (output relay K1 CO contact). The 3UG4512-.B line monitoring relays have an additional relay (output relay K2 CO contact). Output relay K2 switches synchronously with output relay K1.

No settings are required for operation.

Note

The specified voltages represent the absolute thresholds.

Monitoring

Thanks to a special measuring method, a phase failure is detected with certainty despite wide-range voltage from 160 to 690 V AC and reverse power of up to 90 % from the load in the case of regenerative power recovery.

If the line voltage is switched on, the LED "coil symbol" will light up green. If the correct phase sequence is applied to terminals L1-L2-L3, the output relays pick up. If the phase sequence is incorrect, the "phase failure / phase sequence" LED flashes red and the output relays remain in their quiescent position. On a phase failure, the "phase failure / phase sequence" LED lights up red continuously and the output relays drop out to protect the application from any damage that may result.

You will find the switching states of the output relays below in section "Function diagrams" and in Chapter "Diagnostics (Page 81)."

Reset response

The device features an autoreset function. The autoreset function resets the output relay to its original state after an error message and rectification of the fault that has occurred.

Note

The red "phase failure / phase sequence" LED is a fault diagnostics display and does not indicate the current state of the relay!

Function diagrams 3UG4512

Phase failure		Incorrect phase sequence	
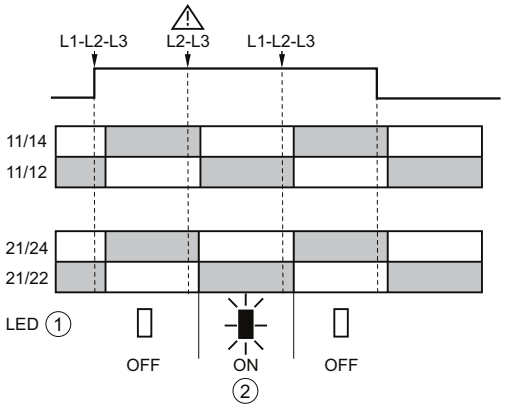		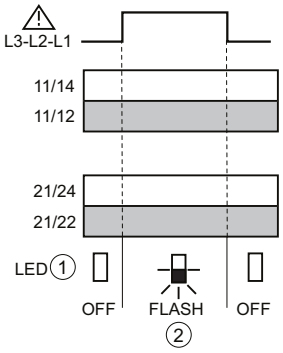	
①	Red	①	Red
②	Phase failure	②	Phase sequence

6.3.3 Diagnostics

6.3.3.1 Diagnostics with LED

Status display

The following information about the operating state is displayed on the 3UG4512 line monitoring relay:

Operating state	LED		State of the output relays
	Coil symbol (green)	Phase failure / phase sequence (red)	12/ 11/ 14 22/ 21/ 24
• Supply voltage not present	Off	Off	
• Supply voltage present • Correct phase sequence • All phases available	On	Off	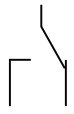
• Supply voltage present • Incorrect phase sequence	On	flashing	
• Supply voltage present • Phase failure	On	On	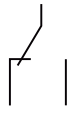

You will find more information about the switching behavior of the output relays in Chapter "Function (Page 79)".

6.3.4 Circuit diagrams

Internal circuit diagrams 3UG4512

3UG4512-.A.. line monitoring relays

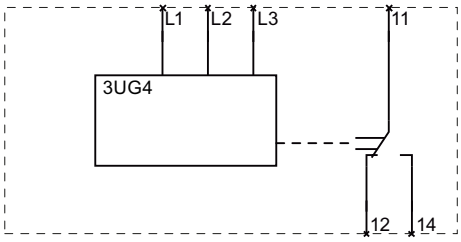

3UG4512-.B.. line monitoring relays

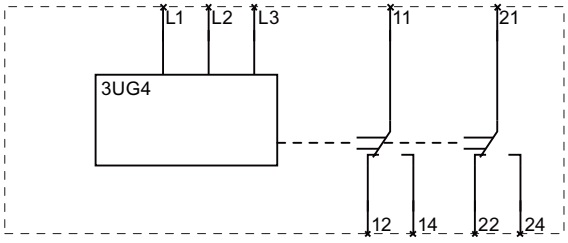

Note

It is not necessary to fuse the measuring circuit to protect the device. Fusing for line protection depends on the cross-section used.

Note

The 3UG4512 line monitoring relays are only suitable for line frequencies of 50 / 60 Hz!

6.3.5 Technical data

Technical data sheet

You can also find the technical data of the product at Siemens Industry Online Support (https://support.industry.siemens.com/cs/ww/en/ps/16367/td).

1. Enter the full article number of the desired device in the "Product" field, and confirm with the Enter key.
2. Click the "Technical data" link.

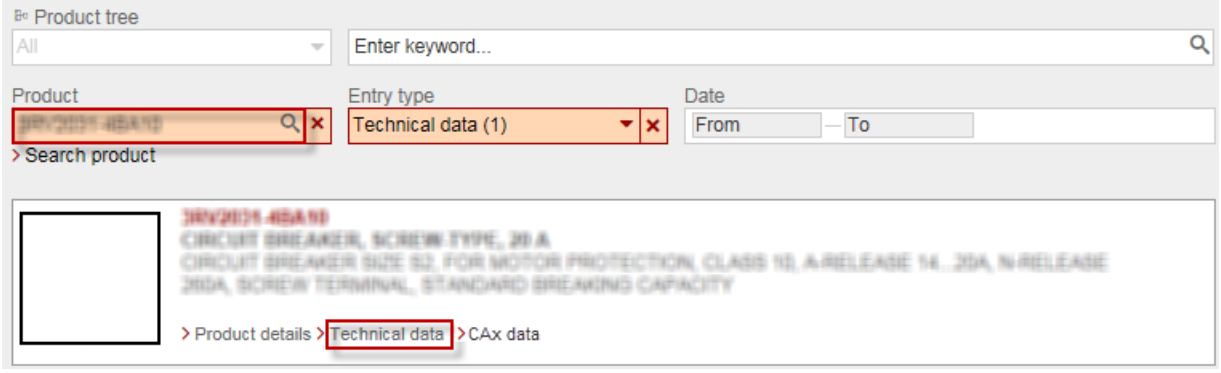

6.4 3UG4513 line monitoring relay

6.4.1 Operator controls and connection terminals

Front view / terminal labeling 3UG4513

Front view	Description	
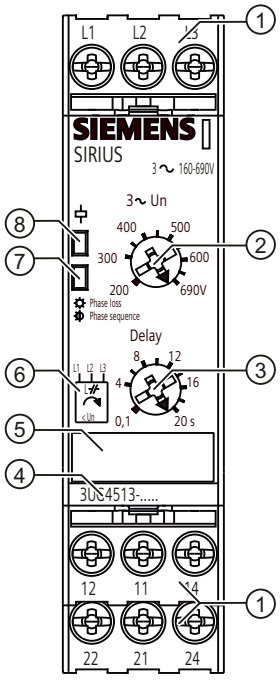	**Position digits**	
	①	Terminal block (removable) Connection is possible using screw-type terminals or spring-loaded terminals.
	②	Rotary button for setting the nominal line voltage (3~U_n)
	③	Rotary button for setting the tripping delay (Delay)
	④	Device article number
	⑤	Label
	⑥	Function symbol
	⑦	Status display: LED phase failure / phase sequence (red)
	⑧	Status display: LED coil symbol (green)
	Terminal labels	
	L1, L2, L3	Rated control supply voltage
	12	Output relay K1 CO contact NC contact
	11	Output relay K1 CO contact root
	14	Output relay K1 CO contact NO contact
	22	Output relay K2 CO contact NC contact
	21	Output relay K2 CO contact root
	24	Output relay K2 CO contact NO contact

You can find additional information on the connection terminals and the permissible conductor cross-sections in the Chapter "Connection methods (Page 18)".

You can find information on connecting in the Chapter "Circuit diagrams (Page 88)".

6.4.2 Function

General functionality

The 3UG4513 line monitoring relays monitor for **phase sequence**, **phase failure** of one of the three phases, and **undershoot** of at least one line-to-line voltage of the set nominal line voltage by 20 % in a three-phase system.

The devices are **self-powered** (measuring voltage = rated control supply voltage) and work on the closed-circuit principle. The 3UG4513 line monitoring relays monitor all phases of three-phase AC networks from 160 to 690 V through terminals L1 / L2 / L3 and also draw power from all three phases simultaneously.

The 3UG4513 line monitoring relay features two rotary buttons for setting the trip delay (Delay) and the nominal line voltage (U_n 3AC).

The hysteresis is 5 % of the set value of the nominal line voltage.

The 3UG4513 line monitoring relays feature 2 output relays (output relay K1 and output relay K2). The relays work synchronously.

Note

The specified voltages represent the absolute thresholds.

Monitoring

If the line voltage is switched on, the LED "coil symbol" will light up green. If the correct phase sequence is applied to terminals L1-L2-L3 and if the monitored line-to-line voltage is in the permissible range of the set nominal line voltage (U_n 3AC), the output relays pick up.

If the phase sequence is incorrect, the "phase failure / phase sequence" LED flashes red and the output relays remain in their quiescent position.

If the monitored line-to-line voltage falls symmetrically (all three phase voltages at the same time) or asymmetrically (only one phase voltage) to more than 20 % below the value for the nominal line voltage set on the front of the device, after the time set on the front has elapsed (Delay), the output relays will drop out and the "phase failure / phase sequence" LED will light up red continuously. On a phase failure, the "phase failure / phase sequence" LED lights up red continuously and the output relays drop out to protect the application from any damage that may result. The set delay time has no effect on the phase failure monitoring.

Thanks to a special measuring method, a phase failure is detected with certainty despite wide-range voltage from 160 to 690 V AC and reverse power of up to 80 % from the load in the case of regenerative power recovery.

You will find the switching states of the output relays below in section "Function diagrams" and in Chapter "Diagnostics (Page 87)."

Reset response

The device features an autoreset that resets the output relays to their original state after an error message and rectification of the fault that has occurred.

Note

The red LED is a fault diagnostics display and does not indicate the current state of the relay!

Function diagrams 3UG4513

Phase failure and undervoltage		Incorrect phase sequence	
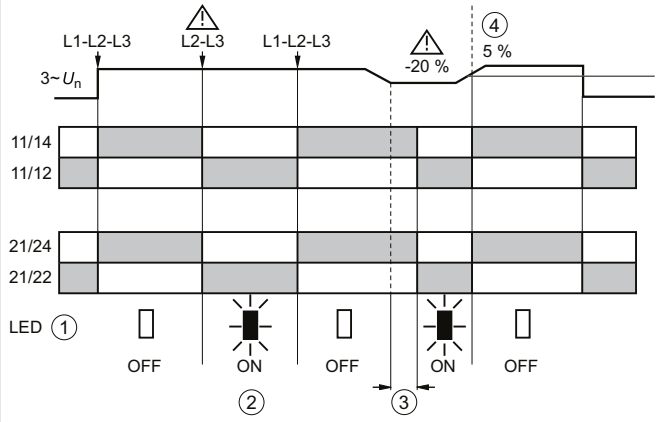		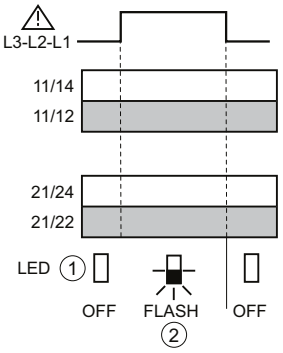	
1	LED phase failure / phase sequence: Red	1	LED phase failure / phase sequence: Red
2	Phase failure	2	Phase sequence
3	Tripping delay time		
4	Hysteresis		

6.4.3 Operation

Parameters

The following parameters can be set on the relevant rotary button using a screwdriver:

Table 6-2 Parameter information, 3UG4513 line monitoring relay

Parameters	Control element [1]	Setting range		Increment
		Minimum value	Maximum value	
Tripping delay time (Delay)	3	0.1 s	20 s	Continuous
Nominal line voltage (3~U_n)	2	200 V	690 V [2]	Continuous

[1] The position digits refer to the front view in Chapter "Operator controls and connection terminals (Page 84)."

[2] absolute threshold

The parameters are described in Chapter "Parameters (Page 265)."

Required tools

The same screwdriver can be used to set the parameters as for mounting the line monitoring relays.

6.4.4 Diagnostics

6.4.4.1 Diagnostics with LED

Status display

The following information about the operating state is displayed on the 3UG4513 line monitoring relays:

Operating status	LED		State of the output relays
	Coil symbol (green)	Phase failure / phase sequence (red)	12/ 11/ 14 22/ 21/ 24
• Supply voltage not present	Off	Off	
• Supply voltage present • Correct phase sequence • All phases available • Line-to-line voltage OK	On	Off	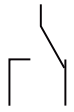
• Supply voltage present • Incorrect phase sequence	On	flashing	
• Supply voltage present • Phase failure	On	On	
• Supply voltage present • Line-to-line voltage undershot	On	On	

You will find more information about the switching behavior of the output relays in Chapter "Function (Page 84)."

6.4.5 Circuit diagrams

Internal circuit diagrams 3UG4513 line monitoring relay

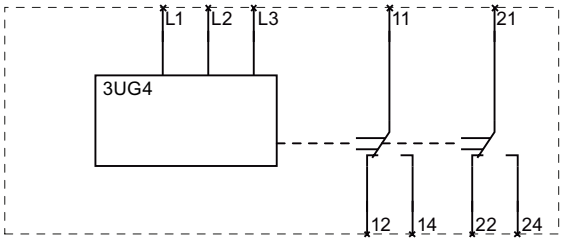

Note

It is not necessary to fuse the measuring circuit to protect the device. Fusing for line protection depends on the cross-section used.

Note

The 3UG4513 line monitoring relays are only suitable for line frequencies of 50 / 60 Hz!

6.4.6 Technical data

Technical data sheet

You can also find the technical data of the product at Siemens Industry Online Support (https://support.industry.siemens.com/cs/ww/en/ps/16367/td).

1. Enter the full article number of the desired device in the "Product" field, and confirm with the Enter key.
2. Click the "Technical data" link.

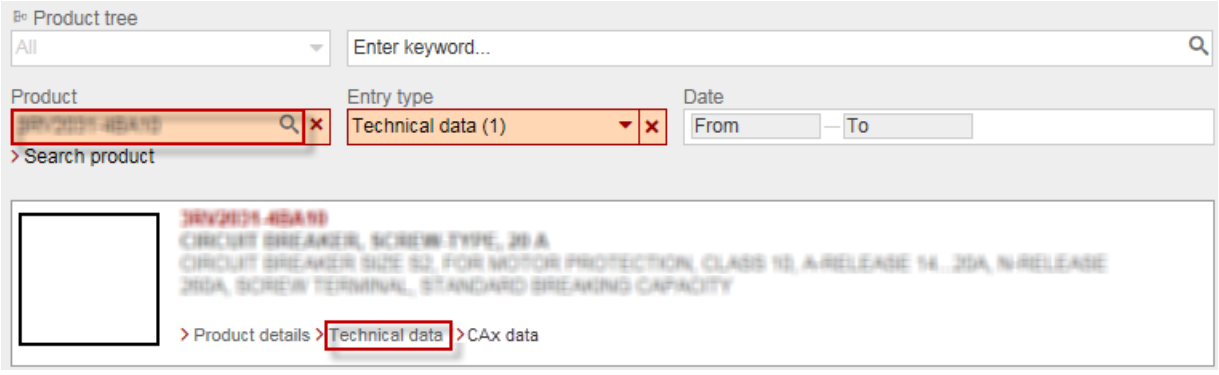

6.5 3UG4614 line monitoring relay

6.5.1 Operator controls and connection terminals

Front view / terminal labeling 3UG4614

Front view	Description	
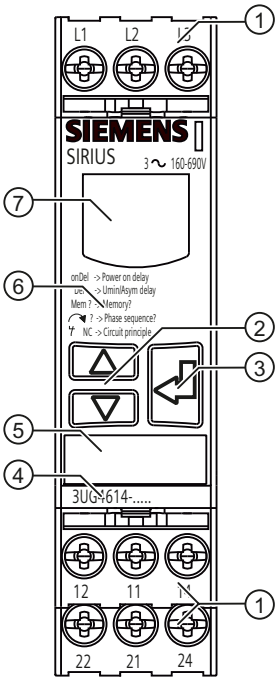	**Position digits**	
	①	Terminal block (removable): Connection is possible using screw terminals or spring-loaded terminals.
	②	Arrow keys for menu navigation
	③	SET key for menu navigation
	④	Device article number
	⑤	Label
	⑥	Legend for menu
	⑦	Display for parameterization, actual-value indication, and diagnostics
	Terminal labels	
	L1, L2, L3	Rated control supply voltage
	12	Output relay K1 CO contact NC contact
	11	Output relay K1 CO contact root
	14	Output relay K1 CO contact NO contact
	22	Output relay K2 CO contact NC contact
	21	Output relay K2 CO contact root
	24	Output relay K2 CO contact NO contact

You can find additional information on the connection terminals and the permissible conductor cross-sections in the Chapter "Connection methods (Page 18)".

You can find information on connecting in the Chapter "Circuit diagrams (Page 94)".

6.5.2 Functions

General functionality

The 3UG4614 line monitoring relays monitor a three-phase system for **phase asymmetry**, **undervoltage**, **phase failure**, and **phase sequence**.

The devices feature a wide-range voltage input and are **self-powered** (measuring voltage = rated control supply voltage). The 3UG4614 line monitoring relays monitor all phases of three-phase AC networks from 160 to 690 V through terminals L1 / L2 / L3 and also draw power from all three phases simultaneously.

The 3UG4614 line monitoring relays feature 2 output relays (output relay K1 and output relay K2). The relays work synchronously.

You will find the setting ranges and factory settings of the available parameters in Chapter "Operation (Page 92)."

You will find a description of the individual parameters in Chapter "Parameters (Page 265)."

Note

The specified voltages represent the absolute thresholds.

Monitoring

The output relays respond in accordance with the set relay switching behavior (closed-circuit principle NC or open-circuit principle NO) if the following conditions are met:

- The correct phase sequence is present at terminals L1-L2-L3
- The monitored voltage (Ux-y) is larger than the set value
- The voltage asymmetry (Asy) is smaller than the set value

If a fault occurs (phase failure, incorrect phase sequence, or phase asymmetry), the output relays switch in accordance with the relay switching behavior.

Note

The line-to-line voltages are measured as a reference for voltage asymmetry and phase failure (20%).

In the case of incorrect direction of rotation, the 3UG4614 line monitoring relays immediately shut down. Thanks to a special measuring method, a phase failure is reliably detected despite a wide voltage range of 160 to 690 V AC and feedback of up to 80% by the load, even in case of regenerative feedback.
If one of the phases fails, the output relays are switched off immediately to protect the application from consequential damage. Set delay times have no effect on the phase failure monitoring.

Note

The 3UG4614 line monitoring relays are only suitable for line frequencies of 50 / 60 Hz.

Startup delay

After applying the supply voltage or resetting the monitoring relays, the set ON-delay begins (onDel). During this time, undershooting or overshooting of the set threshold values will not cause the CO contact to respond but instead will result in a restart of the ON-delay.

Tripping delay

If the measured value overshoots or undershoots the set threshold after expiry of the ON-delay time (onDel), the set tripping delay time (Del) and the relay symbol will flash. After expiry of this

time, the output relays change the switching state. On the display, the current measuring value and the symbol for undershoot or overshoot flash.

You will find the switching states of the output relays below in section "Function diagrams" and in Chapter "Diagnostics (Page 93)".

Function diagrams 3UG4614

Display	Memory = no Relay switching behavior = NC (closed-circuit principle)	Memory = no Relay switching behavior = NO (open-circuit principle)
	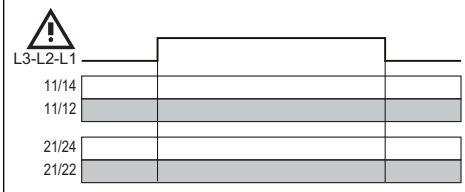	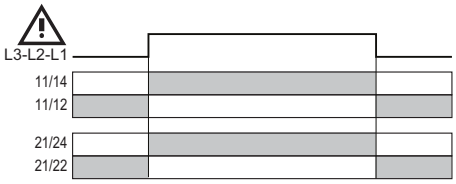
L	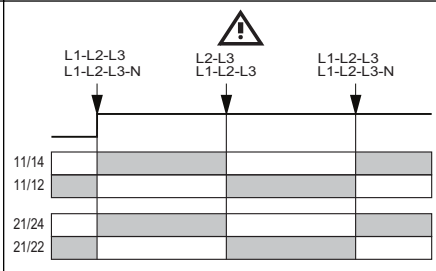	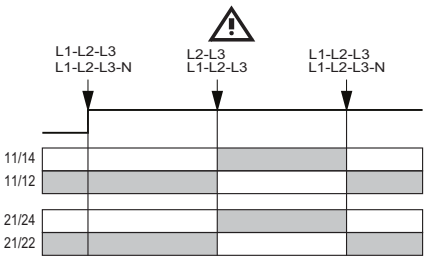
Ux-y	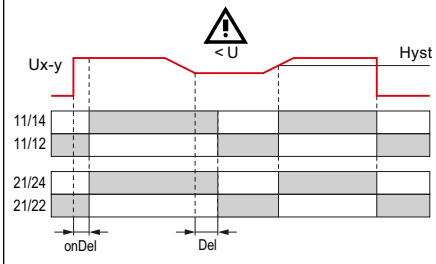	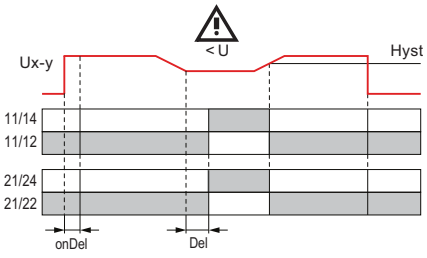
Asym	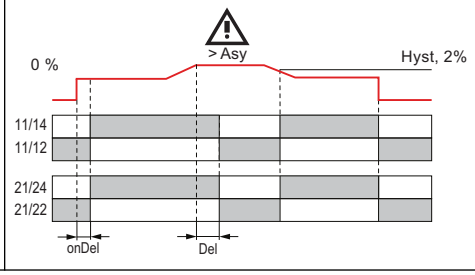	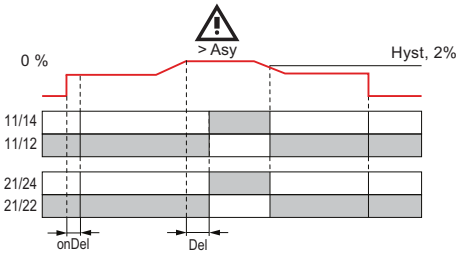

6.5.3 Operation

Parameters

Parameterization of the devices is possible locally using the display and the three keys.

Parameter information

The table below shows the settable parameter information of the 3UG4614 line monitoring relays:

Table 6-3 Parmeter information, 3UG4614 line monitoring relays with digital setting

Menu level	Parameters	Setting range		Increment	Factory setting
		Minimum value	Maximum value		
"RUN"	Threshold for undershoot (U▼)	160 V	690 V	1 V	375 V
"RUN"	Threshold for voltage asymmetry (Asy)	5 % or OFF	20 %	1 %	5 %
"SET"	Hysteresis (Hyst)	1 V	20 V	1 V	5 V
"SET"	Stabilization delay (onDel)	0.1 s	20 s	0.1 s	0.1 s
"SET"	Tripping delay time (Del) (on undervoltage or overshoot of the asymmetry value)	0.1 s	20 s	0.1 s	0.1 s
"SET"	Reset response (Mem)	no = Autoreset	yes = HandRESET	--	no = Autoreset
"SET"	Phase sequence monitoring (↷)	no	yes	--	yes
"SET"	Relay switching behavior (closed-circuit principle NC / open-circuit principle NO)	NC	NO	--	NC

The parameters are described in Chapter "Parameters (Page 265)."

Menu-based operation is described in Chapter "Menu-based operation (Page 37)."

6.5.4 Diagnostics

6.5.4.1 Indications on the display

Display information

The display is divided into three different areas.

① Voltage measured value or fault symbol
② Type of monitoring
③ Symbols of the changeover contacts

Meaning of the information on the display

Note

Indications in the event of a fault

The symbols on the display flash to indicate an error.

The following statuses and line faults are indicated as a diagnostics message with flashing symbols:

Display area	Symbol	Meaning
①	200V	Measured line-to-line voltage (L1 - L2) is displayed
①	L	Flashing: Phase failure detected
①	!	Flashing: Incorrect phase sequence detected
①	Asym	Flashing: Voltage asymmetry detected
②		Monitoring for overshoot of the voltage asymmetry
②		Monitoring for voltage undershoot
②	◄	Voltage is in correct range
②	▲	A voltage overshoot has occurred
②	▼	A voltage undershoot has occurred
③		• Not flashing: Relay contact 11/12 open, relay contact 11/14 closed • Flashing: Delay time (ON-delay or tripping delay) running • Masked out: Relay contact 11/12 closed, relay contact 11/14 open
③		• Not flashing: Relay contact 21/22 open, relay contact 21/24 closed • Flashing: Delay time (ON-delay or tripping delay) running • Masked out: Relay contact 21/22 closed, relay contact 21/24 open

You will find more information about the switching behavior of the output relays in Chapter "Functions (Page 89)".

6.5.4.2 Reset

RESET

How the outputs are reset depends on the "Reset response" parameter (see Chapter "Reset response (Page 265)").

The following settings can be selected:

- Automatic reset (Memory = O / Mem = no)
  The device is reset automatically as soon as a previously occurring error has been dealt with.
- Manual RESET (Memory = I / Mem = yes)
  To reset the devices with digital setting, it is necessary to press both arrow keys simultaneously for more than 2.5 s after removal of the cause of error. If the cause of the error has not been removed, a new error message appears immediately. Alternatively, the devices can be reset by switching the rated control supply voltage on and off.

6.5.5 Circuit diagrams

Internal circuit diagrams 3UG4614 line monitoring relay

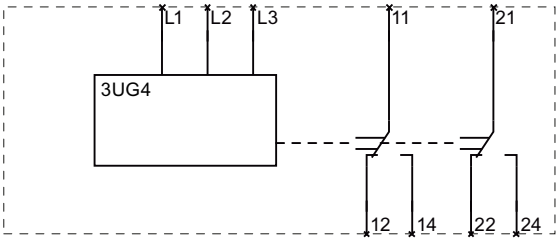

Figure 6-1 3UG4614

Note

It is not necessary to fuse the measuring circuit to protect the device. Fusing for line protection depends on the cross-section used.

6.5.6 Technical data

Technical data sheet

You can also find the technical data of the product at Siemens Industry Online Support (https://support.industry.siemens.com/cs/ww/en/ps/16367/td).

1. Enter the full article number of the desired device in the "Product" field, and confirm with the Enter key.
2. Click the "Technical data" link.

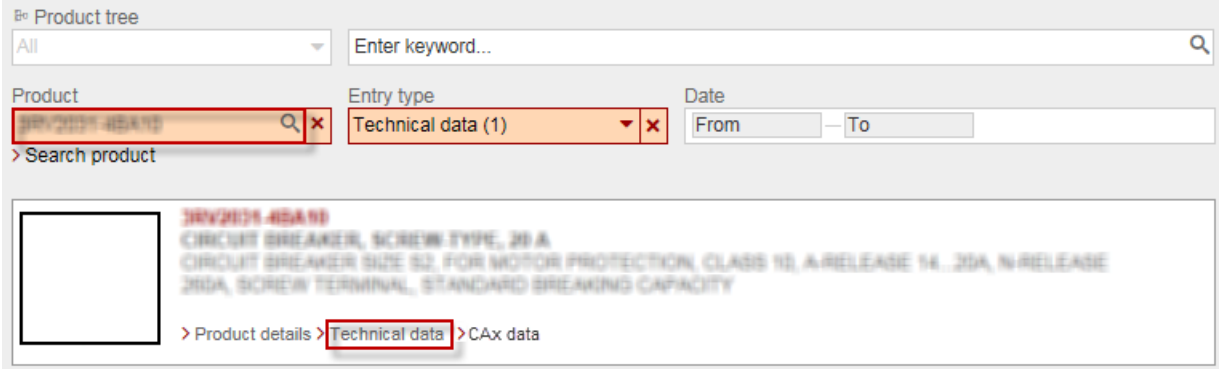

6.6 3UG4615 / 3UG4616 line monitoring relays

6.6.1 Operator controls and connection terminals

Front view / terminal labeling 3UG4615/ 3UG4616

Front view	Description	
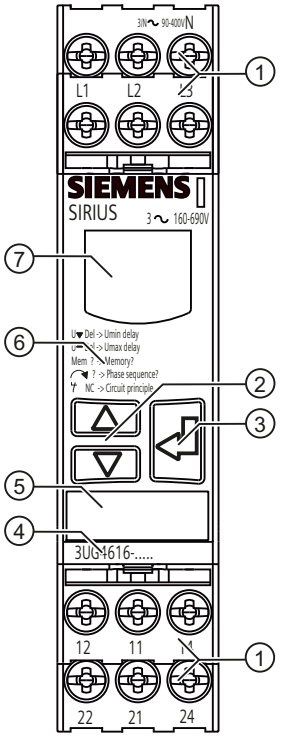	**Position digits**	
	①	Terminal block (removable) Connection is possible using screw-type terminals or spring-loaded terminals.
	②	Arrow keys for menu navigation
	③	SET key for menu navigation
	④	Device article number
	⑤	Label
	⑥	Legend for menu
	⑦	Display for parameterization, actual-value indication, and diagnostics
	Terminal labels	
	L1, L2, L3	Rated control supply voltage
	N	Neutral conductor (only on 3UG4616)
	12	Output relay K1 CO contact NC contact
	11	Output relay K1 CO contact root
	14	Output relay K1 CO contact NO contact
	22	Output relay K2 CO contact NC contact
	21	Output relay K2 CO contact root
	24	Output relay K2 CO contact NO contact

You can find additional information on the connection terminals and the permissible conductor cross-sections in the Chapter "Connection methods (Page 18)".

You can find information on connecting in the Chapter "Circuit diagrams (Page 102)".

6.6.2 Functions

General functionality

The 3UG4615 line monitoring relays monitor a three-phase system for **phase failure**, **undervoltage**, **overvoltage**, and **phase sequence**.

Note

The 3UG4616 line monitoring relays have the same functions as the 3UG4615 monitoring relays and also monitor the **neutral conductor for failure**.

The devices feature a wide-range voltage input and are **self-powered** (measuring voltage = rated control supply voltage). Depending on the version, the line monitoring relays are powered with a line-to-line voltage of 160 to 690 V (3UG4615) or with a line-to-neutral voltage of 90 to 400 V (3UG4616) through terminals L1 / L2 / L3.

The 3UG4615 / 3UG4616 line monitoring relays feature 2 output relays (output relay K1 and output relay K2).

The 3UG4615 / 3UG4616 line monitoring relays have a display and are parameterized with three keys.

You will find the setting ranges and factory settings of the available parameters in Chapter "Operation (Page 99)."

You will find a description of the individual parameters in Chapter "Parameters (Page 265)."

Note

The specified voltages represent the absolute thresholds.

Monitoring

The 3UG4615 / 3UG4616 line monitoring relays have two output relays. With output relay K1, a three-phase system is monitored for undervoltage. With output relay K2, a three-phase system is monitored for overvoltage.

The output relays respond in accordance with the set relay switching behavior (closed-circuit principle NC or open-circuit principle NO).

If a fault occurs (phase failure, incorrect phase sequence, voltage undershoot or voltage overshoot), the output relays switch in accordance with the relay switching behavior. In the case of voltage undershoot or voltage overshoot, the output relays do not respond until expiry of the set tripping delay time (U▼Del and U▲Del).

In the case of incorrect direction of rotation, the devices immediately shut down.

The display indicates the following voltages in the case of the line monitoring relays:

- 3UG4615: Line-to-line voltage between L1 and L2, L1 and L3, L2 and L3
- 3UG4616: Line-to-neutral voltage between L1 and N, L2 and N, L3 and N

Thanks to a special measuring method, a phase failure is detected with certainty despite wide-range voltage from 160 to 690 V AC and reverse power of up to 80 % from the load in the case of regenerative power recovery.
On failure of one of the phases (or neutral conductor failure for the 3UG4616 line monitoring relays), the output relays drop out immediately to protect the application from any damage that may result. Set delay times have no effect on the phase failure monitoring.

Note

The 3UG4615 and 3UG4616 line monitoring relays are only suitable for line frequencies of 50 / 60 Hz!

You will find the switching states of the output relays below in section "Function diagrams" and in Chapter "Diagnostics (Page 100)."

Function diagrams 3UG4615 / 3UG4616

Display	Memory = no Relay switching behavior = NC (closed-circuit principle)	Memory = no Relay switching behavior = NO (open-circuit principle)
	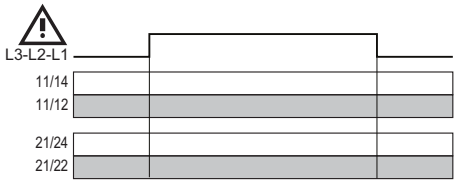	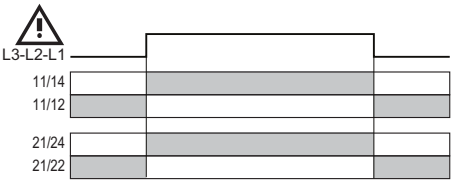
	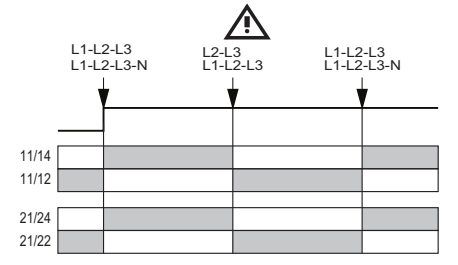	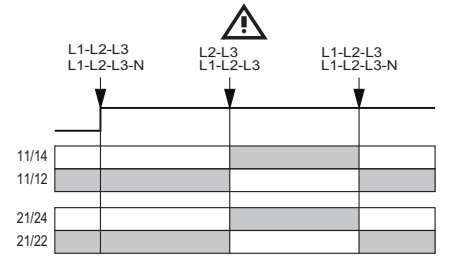

Display	Memory = no Relay switching behavior = NC (closed-circuit principle)	Memory = no Relay switching behavior = NO (open-circuit principle)
Ux-y▼	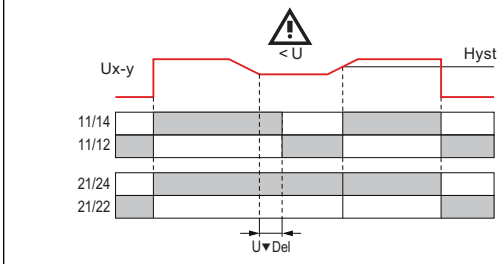	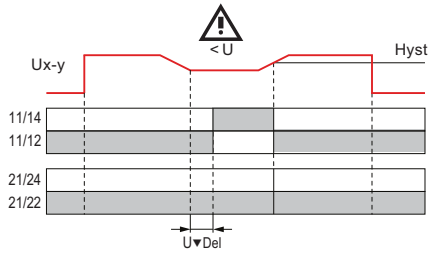
Ux-y▲	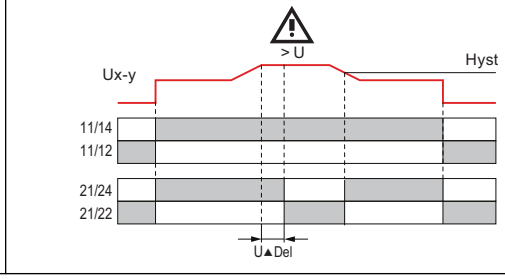	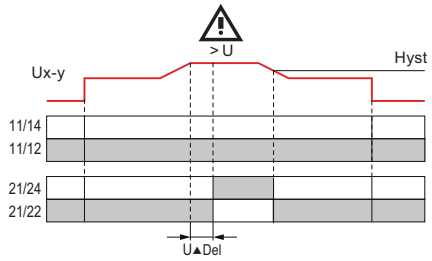

6.6.3 Operation

Parameters

Parameterization of the devices is possible locally using the display and the three keys.

Parameter information

The table below shows the settable parameter information of the 3UG4615 and 3UG4616 line monitoring relays:

Table 6-4 Parmeter information, 3UG4615 and 3UG4616 line monitoring relays with digital setting

Menu level	Parameters	Setting range		Increment	Factory setting
		Minimum value	Maximum value		
"RUN"	Threshold for undershoot (U▼)	160 V[1)] 90 V[2)]	690 V[1)] 400 V[2)]	1 V	375 V[1)] 215 V[2)]
"RUN"	Threshold for overshoot (U▲)	160 V[1)] 90 V[2)]	690 V[1)] 400 V[2)]	1 V	425 V[1)] 245 V[2)]
"SET"	Hysteresis (Hyst)	1.0 V	20.0 V	1 V	5.0 V
"SET"	Tripping delay time (U▼Del)	0.1 s	20.0 s	0.1 s	0.1 s

Menu level	Parameters	Setting range		Increment	Factory setting
		Minimum value	Maximum value		
"SET"	Tripping delay time (U▲Del)	0.1 s	20.0 s	0.1 s	0.1 s
"SET"	Reset response (Mem)	no = Autoreset	yes = Hand-RESET	--	no = Autoreset
"SET"	Phase sequence monitoring (↷)	no	yes	--	no
"SET"	Relay switching behavior (closed-circuit principle NC / open-circuit principle NO)	NC	NO	--	NC

[1] 3UG4615 line monitoring relay

[2] 3UG4616 line monitoring relay

The parameters are described in the Chapter "Parameters (Page 265)".

Menu-based operation is described in the Chapter "Menu-based operation (Page 37)".

6.6.4 Diagnostics

6.6.4.1 Indications on the display

Display information

The display is divided into three different areas.

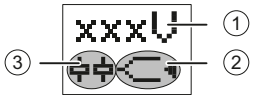

① Voltage measured value or fault symbol
② Type of monitoring
③ Symbols of the changeover contacts

Meaning of the information on the display

Note

Indications in the event of a fault

The symbols on the display flash to indicate an error.

The following statuses and line faults are indicated as a diagnostics message with flashing symbols:

Display area	Symbol		Meaning
①	200V		Measured voltage is displayed
①	Lx		Flashing: Phase failure detected
①			Flashing: Incorrect phase sequence detected
②			Monitoring for voltage overshoot
②			Monitoring for voltage undershoot
②	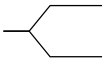		Range monitoring (monitoring for voltage overshoot and undershoot)
②	◄		Voltage is in correct range
②	▲		A voltage overshoot has occurred
②	▼		A voltage undershoot has occurred
③		U▼	• Not flashing: Relay contact 11/12 open, relay contact 11/14 closed • Flashing: Delay time (tripping delay) is running • Masked out: Relay contact 11/12 closed, relay contact 11/14 open
③		U▲	• Not flashing: Relay contact 21/22 open, relay contact 21/24 closed • Flashing: Delay time (tripping delay) is running • Masked out: Relay contact 21/22 closed, relay contact 21/24 open

Note

On phase failure or phase sequence error, both CO contacts respond.

Note

If the monitoring relays are used downstream of a frequency converter, it is necessary to obtain a waveform without additional zero crossings of the voltage. This can be achieved with the help of a sine-wave filter.

You will find more information about the switching behavior of the output relays in Chapter "Functions (Page 97)".

6.6.4.2 Reset

RESET

How the outputs are reset depends on the "Reset response" parameter (see Chapter "Reset response (Page 265)").

The following settings can be selected:

- Automatic reset (Memory = O / Mem = no)
  The device is reset automatically as soon as a previously occurring error has been dealt with.
- Manual RESET (Memory = I / Mem = yes)
  To reset the devices with digital setting, it is necessary to press both arrow keys simultaneously for more than 2.5 s after removal of the cause of error. If the cause of the error has not been removed, a new error message appears immediately. Alternatively, the devices can be reset by switching the rated control supply voltage on and off.

6.6.5 Circuit diagrams

Internal circuit diagrams 3UG4615 / 3UG4616

3UG4615 line monitoring relay

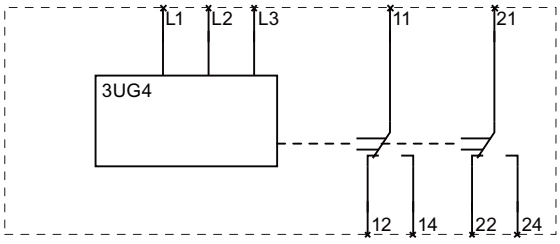

3UG4616 line monitoring relay

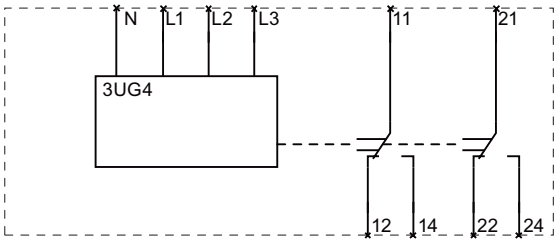

Note

It is not necessary to fuse the measuring circuit to protect the device. Fusing for line protection depends on the cross-section used.

6.6.6 Technical data

Technical data sheet

You can also find the technical data of the product at Siemens Industry Online Support (https://support.industry.siemens.com/cs/ww/en/ps/16367/td).

1. Enter the full article number of the desired device in the "Product" field, and confirm with the Enter key.
2. Click the "Technical data" link.

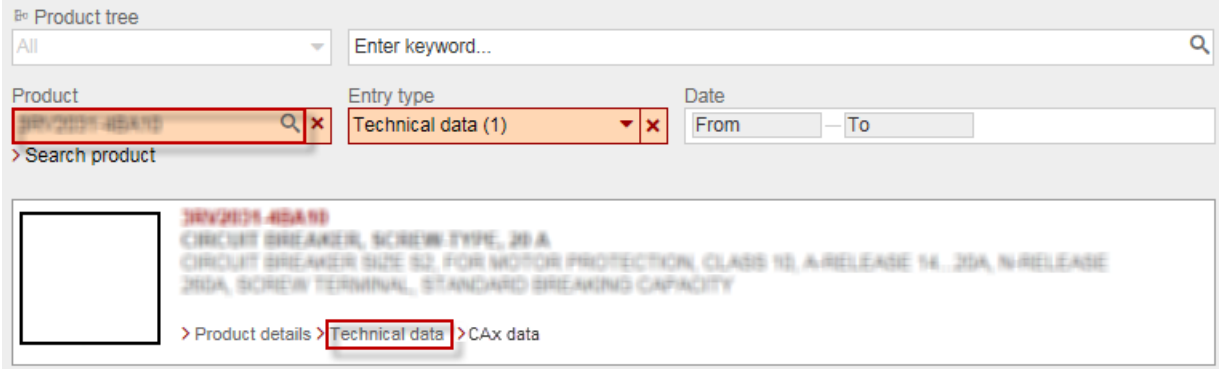

6.7 3UG4617 / 3UG4618 line monitoring relays

6.7.1 Operator controls and connection terminals

Front view / terminal labeling 3UG4617 / 3UG4618

Front view	Description	
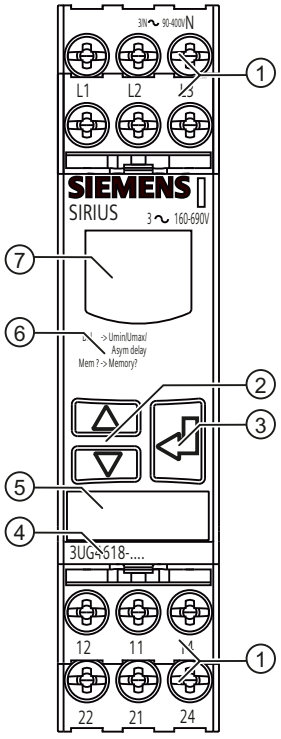	**Position digits**	
	①	Terminal block (removable): Connection is possible using screw terminals or spring-loaded terminals.
	②	Arrow keys for menu navigation
	③	SET key for menu navigation
	④	Device article number
	⑤	Label
	⑥	Legend for menu
	⑦	Display for parameterization, actual-value indication, and diagnostics
	Terminal labels	
	L1, L2, L3	Rated control supply voltage
	N	Neutral conductor (on 3UG4618 only)
	12	Output relay K1 CO contact NC contact
	11	Output relay K1 CO contact root
	14	Output relay K1 CO contact NO contact
	22	Output relay K2 CO contact NC contact
	21	Output relay K2 CO contact root
	24	Output relay K2 CO contact NO contact

You can find additional information on the connection terminals and the permissible conductor cross-sections in the Chapter "Connection methods (Page 18)".

You can find information on connecting in the Chapter "Circuit diagrams (Page 111)".

6.7.2 Functions

General functionality

The 3UG4617 line monitoring relays monitor a three-phase system for **phase sequence**, **phase failure**, **phase asymmetry**, **undervoltage**, and **overvoltage**.

Note

The 3UG4618 line monitoring relays have the same functions as the 3UG4617 monitoring relays and also monitor the **neutral conductor for failure**.

The devices feature a wide-range voltage input and are **self-powered** (measuring voltage = rated control supply voltage) and work on the closed-circuit principle. Depending on the version, the line monitoring relays are powered with a line-to-line voltage of 160 to 690 V (3UG4617) and with a line-to-neutral voltage of 90 to 400 V (3UG4618) through terminals L1 / L2 / L3.

The 3UG4617 / 3UG4618 line monitoring relays have a display and are parameterized with three keys.

You will find the setting ranges and factory settings of the available parameters in Chapter "Operation (Page 108)."

You will find a description of the individual parameters in Chapter "Parameters (Page 265)."

Note

The specified voltages represent the absolute thresholds.

Monitoring

Output relay K1 is for warning or shutdown on faults in the power system (voltage, asymmetry). Output relay K2 responds differently depending on the phase sequence.

Phase sequence

If the correct phase sequence is applied to terminals L1-L2-L3, output relay K2 (relay contact 21-22-24) picks up. This is represented by a relay symbol on the display. If the phase sequence is incorrect, output relay K2 will not pick up. An error is not indicated on the display; only the relay symbol remains in the disconnected state.

Undervoltage or overvoltage

If the monitored voltages (Ux-y) are larger than the set lower voltage value (U▼) and smaller than the set upper voltage value (U▲), i.e. they are within the voltage limits and the line voltage asymmetry (Asy) is less than the set value, the output relay K1 (relay contact 11-12-14) picks up approx. 50 ms after the response of output relay K2 (relay contact 21-22-24).

The display indicates the following voltages in the case of the line monitoring relays:

- 3UG4617: Line-to-line voltage between L1 and L2, L1 and L3, L2 and L3
- 3UG4618: Line-to-neutral voltage between L1 and N, L2 and N, L3 and N

Phase failure

In the case of a phase failure (or neutral conductor failure for the 3UG4618 line monitoring relays), output relay K1 (relay contact 11-12-14) drops out without delay to protect the application from any damage that may result. Set delay times have no effect on phase failure monitoring.
In the case of voltage undershoot, voltage overshoot, or asymmetry overshoot faults, output relay K1 drops out after the set tripping delay time (Del).

Thanks to a special measuring method, a phase failure is detected with certainty despite wide-range voltage from 160 to 690 V AC and reverse power of up to 80 % from the load in the case of regenerative power recovery.

Incorrect direction of rotation

With the CO contact 21-22-24 of the output relay K2, for example, an incorrectly fed phase sequence for a load connected downstream can be automatically corrected using an external reversing combination. The Chapter "Circuit diagrams (Page 111)" provides an example of wiring for automatic phase correction.

Note

The 3UG4617 and 3UG4618 line monitoring relays only evaluate the phase sequence while all 3 phases are present. For safety reasons, the phase sequence is not reevaluated after 2-phase operation or a phase failure after which the third phase has appeared. In this case, the output relay for the phase rotation remains in its last switching state. The phase sequence is not reevaluated until after the device has been reset or all 3 phases have been simultaneously switched off and on again.

Note

The 3UG4617 and 3UG4618 line monitoring relays are only suitable for line frequencies of 50 / 60 Hz!

You will find the switching states of the output relays below in the Section "Function diagrams" and in the Chapter "Diagnostics (Page 109)."

Function diagrams 3UG4617 / 3UG4618

Display	Correct phase sequence L1-L2-L3 Memory = no	Incorrect phase sequence L3-L2-L1 Memory = no
L LN	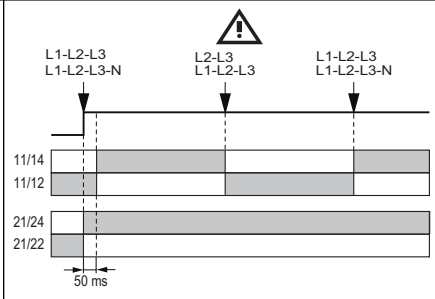	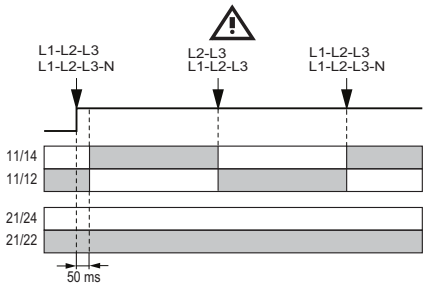
Ux-y	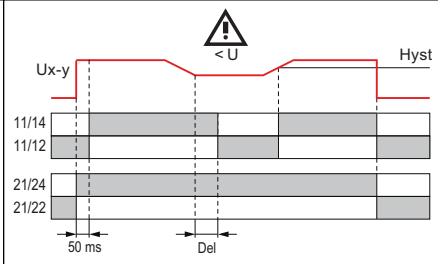	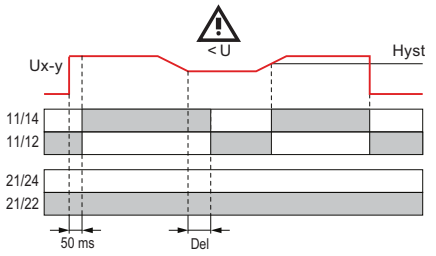
Ux-y	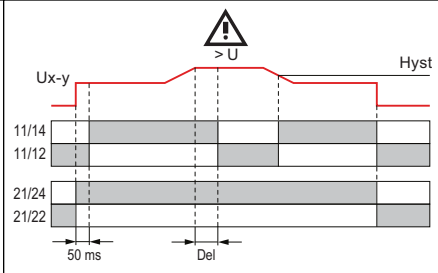	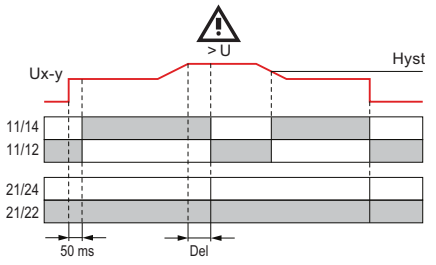
Asym	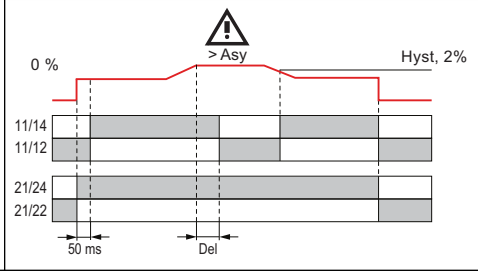	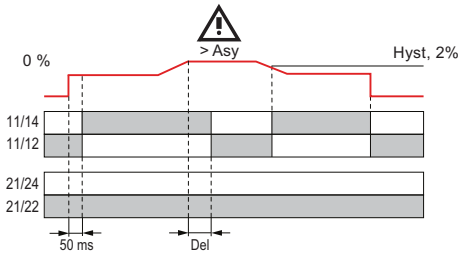

6.7.3 Operation

Parameters

Parameterization of the devices is possible locally using the display and the three keys.

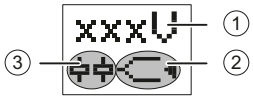

Parameter information

The table below shows the settable parameter information of the 3UG4617 and 3UG4618 line monitoring relays:

Table 6-5 Parmeter information, 3UG4617 and 3UG4618 line monitoring relays with digital setting

Menu level	Parameters	Setting range		Increment	Factory setting
		Minimum value	Maximum value		
"RUN"	Threshold for voltage undershoot (U▼)	160 V[1)] 90 V[2)]	690 V[1)] 400 V[2)]	1 V	375 V[1)] 215 V[2)]
"RUN"	Threshold for voltage overshoot (U▲)	160 V[1)] 90 V[2)]	690 V[1)] 400 V[2)]	1 V	425 V[1)] 245 V[2)]
"RUN"	Voltage asymmetry (Asy)	5 % or OFF	20 %	1 %	OFF
"SET"	Hysteresis (Hyst)	1 V	20.0 V	1 V	5 V
"SET"	Tripping delay time (Del)	0.1 s	20.0 s	0.1 s	0.1 s
"SET"	Reset response (Mem)	no = Autoreset	yes = Hand-RESET	--	no = Autoreset

[1)] 3UG4617 line monitoring relay

[2)] 3UG4618 line monitoring relay

The parameters are described in the Chapter "Parameters (Page 265)".

Menu-based operation is described in the Chapter "Menu-based operation (Page 37)".

6.7.4 Diagnostics

6.7.4.1 Indications on the display

Display information

The display is divided into three different areas.

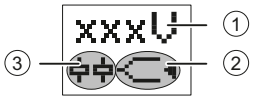

① Voltage measured value or fault symbol
② Type of monitoring
③ Symbols of the changeover contacts

Meaning of the information on the display

Note

Indications in the event of a fault

The symbols on the display flash to indicate an error.

The following statuses and line faults are indicated as a diagnostics message with flashing symbols:

Display area	Symbol		Meaning
①	200V		Measured voltage is displayed
①	L		Flashing: Phase failure detected
①	Asym		Flashing: Line voltage asymmetry detected
②			Monitoring for voltage overshoot
②			Monitoring for voltage undershoot
②			Range monitoring (monitoring for voltage overshoot and undershoot)
②	◀		Voltage is in correct range
②	▲		A voltage overshoot has occurred
②	▼		A voltage undershoot has occurred
③		Error	• Not flashing: Relay contact 11/12 open, relay contact 11/14 closed • Flashing: Delay time (tripping delay) is running • Masked out: Relay contact 11/12 closed, relay contact 11/14 open

Display area	Symbol		Meaning
③	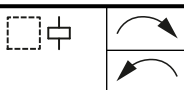		• Not flashing: Relay contact 21/22 open, relay contact 21/24 closed • Masked out: Relay contact 21/22 closed, relay contact 21/24 open

Note

CO contact 1 switches on all types of error.

CO contact 2 is for operating a reversing combination.

You will find more information about the switching behavior of the output relays in Chapter "Functions (Page 105)".

6.7.4.2 Reset

RESET

How the outputs are reset depends on the "Reset response" parameter (see Chapter "Reset response (Page 265)").

The following settings can be selected:

- Automatic reset (Memory = O / Mem = no)
  The device is reset automatically as soon as a previously occurring error has been dealt with.
- Manual RESET (Memory = I / Mem = yes)
  To reset the devices with digital setting, it is necessary to press both arrow keys simultaneously for more than 2.5 s after removal of the cause of error. If the cause of the error has not been removed, a new error message appears immediately. Alternatively, the devices can be reset by switching the rated control supply voltage on and off.

6.7.5 Circuit diagrams

6.7.5.1 Internal circuit diagrams

Internal circuit diagram 3UG4617 / 3UG4618

3UG4617 line monitoring relay

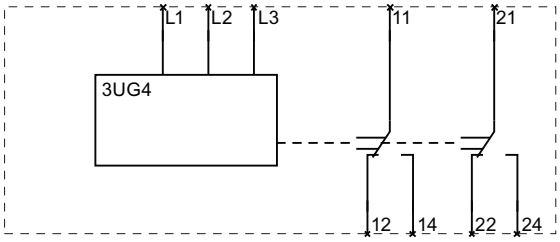

3UG4618 line monitoring relay

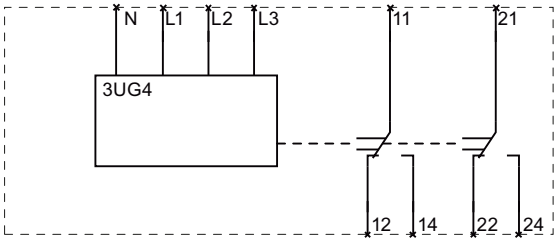

Note

It is not necessary to fuse the measuring circuit to protect the device. Fusing for line protection depends on the cross-section used.

6.7.5.2 Wiring examples

Automatic phase correction

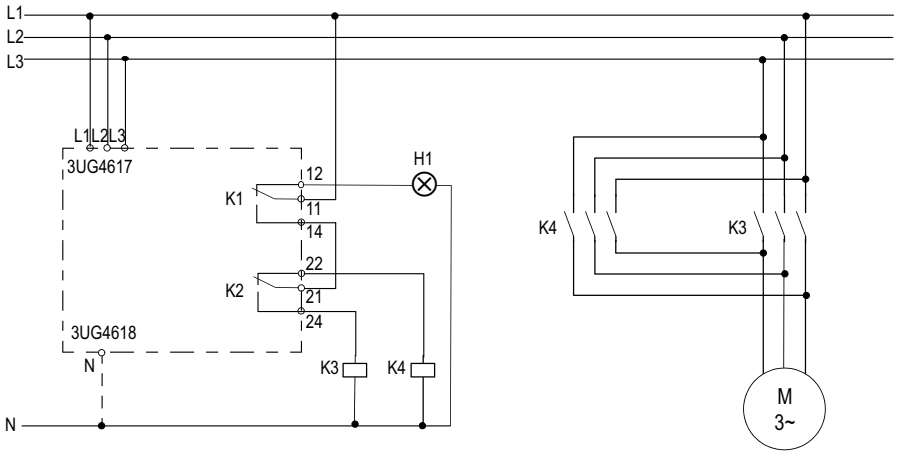

Figure 6-2 3UG4617 / 3UG4618 automatic phase correction

6.7.6 Technical data

Technical data sheet

You can also find the technical data of the product at Siemens Industry Online Support (https://support.industry.siemens.com/cs/ww/en/ps/16367/td).

1. Enter the full article number of the desired device in the "Product" field, and confirm with the Enter key.
2. Click the "Technical data" link.

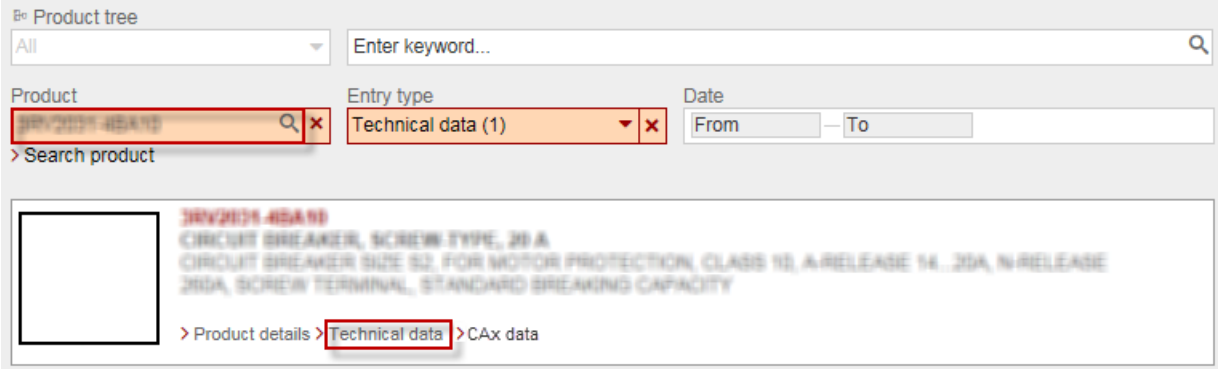

3UG4621/3UG4622 current monitoring relays

7

7.1 Application areas

Application areas

The current monitoring relays are used, for example, in the following applications:

Table 7-1 Application areas of the current monitoring relays

Function	Application
• Undercurrent monitoring and overcurrent monitoring • Monitoring the functionality of electrical loads • Wire-break monitoring	• Threshold switch for analog signals from 4 to 20 mA • Emergency lighting (failure of a lamp → drop in current strength in the system) • Heating systems (electroplating plants, plastic injection machines, paintshops) • Lamps (tunnels, OP lighting, traffic lights, signal systems, UV lamps, infrared radiators, laser lamps)

7.2 Operator controls and connection terminals

Front view / terminal labeling 3UG4621 / 3UG4622

Front view	Description	
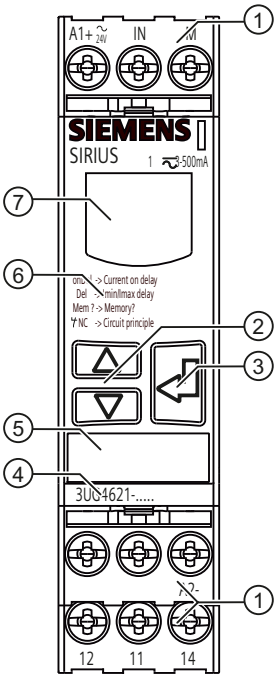	**Position digits**	
	①	Terminal block (removable): Connection is possible using screw terminals or spring-loaded terminals
	②	Arrow keys for menu navigation
	③	SET key for menu navigation
	④	Device article number
	⑤	Label
	⑥	Legend for menu
	⑦	Display for parameterization, actual-value indication, and diagnostics
	Terminal labels	
	A1+	Rated control supply voltage ~ / +
	A2-	Rated control supply voltage ~ / -
	M (GND)	Measuring signal input -
	IN	Measuring signal input +
	12	Output relay K1 CO contact NC contact
	11	Output relay K1 CO contact root
	14	Output relay K1 CO contact NO contact

You can find additional information on the connection terminals and the permissible conductor cross-sections in the Chapter "Connection methods (Page 18)".

You can find information on connecting in the Chapter "Circuit diagrams (Page 121)".

7.3 Functions

General functionality

Depending on the set threshold, the 3UG4621 / 3UG4622 current monitoring relays monitor a single-phase AC load current (RMS value) or DC load current flowing over terminals IN and M of the device for **overshoot** (I▲) or **undershoot** (I▼) or in **range monitoring** (I▲ and I▼). The devices differ by their measuring ranges and versions with different rated control supply voltages. The true root mean square value (tRMS) of the current is measured. Depending on their design, the current monitoring relays are powered with a rated control supply voltage of 24 V AC/DC or 24 to 240 V AC/DC supply voltage through terminals A1/A2.

The 3UG4621 / 3UG4622 current monitoring relays have a display and are parameterized with three keys.

You will find the setting ranges and factory settings of the available parameters in Chapter "Operation (Page 119)."

You will find a description of the individual parameters in Chapter "Parameters (Page 265)."

Monitoring

If the rated control supply voltage is switched on and no load current is as yet flowing, the display indicates 0.0 mA (on the 3UG4621) or 0.00 A (on the 3UG4622) and shows a symbol for current overshoot monitoring, current undershoot monitoring, or range monitoring.

ON-delay time

If the load current overshoots the lower measuring range limit 3 mA (3UG4621) or 50 mA (3UG4622), the set ON-delay time begins (onDel). During this time, undershooting or overshooting of the set threshold values will not result in a relay response of the CO contact.

Tripping delay

If a threshold is reached, the output relay K1 responds after expiry of the tripping delay time (I Del) depending on the set relay switching behavior. An output change-over contact is available as a signaling contact.

Note

For AC currents I > 10 A, commercially available current transformers, e.g. 4NC, can be used as accessories. You will find more information in Catalog LV10 (https://support.industry.siemens.com/cs/de/de/view/109482234/en).

Relay switching behavior

The relay switching behavior can be defined in order to adapt the current monitoring relay to different external circuit connections and applications.
If the closed-circuit principle (NC) is set, active switching of the relay when no fault is pending also ensures that a power failure is detected as a fault. If the open-circuit principle (NO) is set, active switching of the relay only when a fault occurs means that a power failure is not detected as a fault.

With the setting U_S = on, the relay switches to the correct state when the supply voltage is applied but waits to detect the current flow before actually monitoring. The monitoring relay is thus switched on without generating an error message because, for example. the motor is not yet running and no current is flowing.

With parameterization NC / U_S = on, a motor can also be switched directly by closing the monitoring relay if the output relay K1 switches the contactor coil voltage. However, a defect that prevents current from flowing is not signaled with this setting. In this case, setting the relay switching behavior to NC / I > 3 mA (3UG4621) or NC / I > 50 mA (3UG4622) is appropriate. When the supply voltage is applied, the output relay K1 is switched to the operate condition and the ON-delay time (onDel) is started. If current is not yet flowing normally after this time has elapsed, the output relay will switch back to the fault condition.

If a motor is not to be started directly using the monitoring relay, but in parallel using a pushbutton, with the monitoring relay ensuring the contactor holding, the switching behavior can be set accordingly.

With the setting I > 3 mA (3UG4621) or I > 50 mA (3UG4622) in combination with a set ON-delay time onDel = 0, output relay K1 will only switch to the OK condition if a current is actually

measured. In this case, the monitoring relay will hold the contactor until a fault occurs or the current flow is interrupted by a further button or switch. If an ON-delay time is necessary, initial switching of the output relay on application of the supply voltage or on starting the ON-delay time must be suppressed by means of external logic.

Note

The name of the parameter values is based on the assumption that the ON-delay time onDel = 0 is set. The output relay K1 then responds either immediately when the supply voltage U_S is applied or after measurement of a current flow on the set NC or NO working principle.

You will find the switching states of the output relay below in the section entitled "Function diagrams" and in Chapter "Diagnostics (Page 120)."

Function diagrams (from application of the rated control supply voltage U_s = on)

Display	Memory = no Relay switching behavior = NC (closed-circuit principle) U_s = on	Memory = no Relay switching behavior = NO (open-circuit principle) U_s = on
I▲ I▼ = off	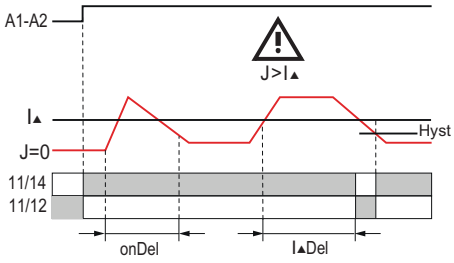	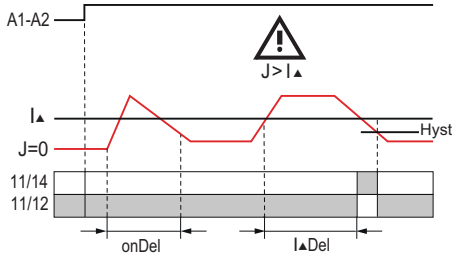
I▲ = off I▼	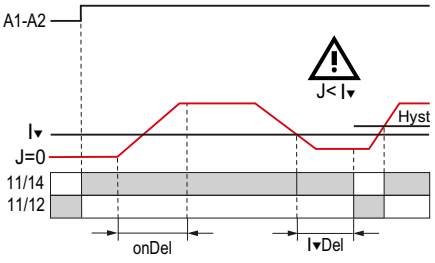	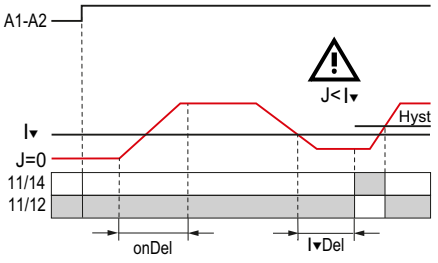
I▲ I▼	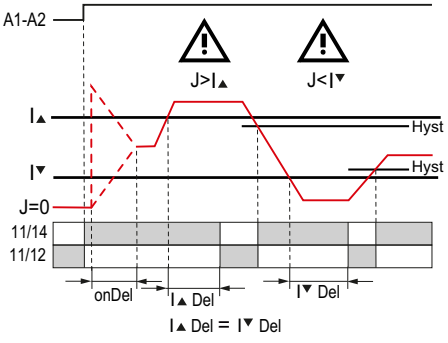	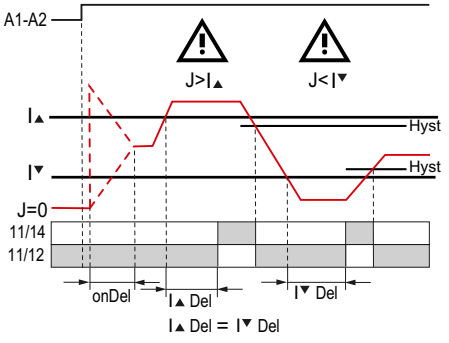

J = Currently measured current value

I = set threshold value for the current

Function diagrams (on reaching the lower measuring range limit of the measuring current I > 3 mA / 50 mA)

Display	Memory = no Relay switching behavior = NC (closed-circuit principle) I > 3 mA / 50 mA	Memory = no Relay switching behavior = NO (open-circuit principle) I > 3 mA / 50 mA
I▲ I▼ = off	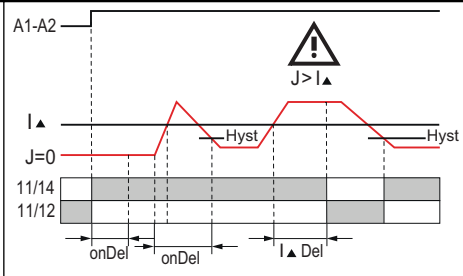	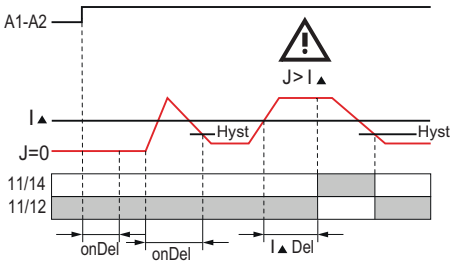
I▲ = off I▼	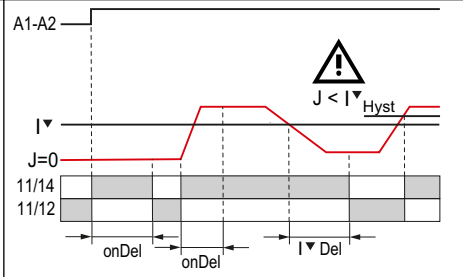	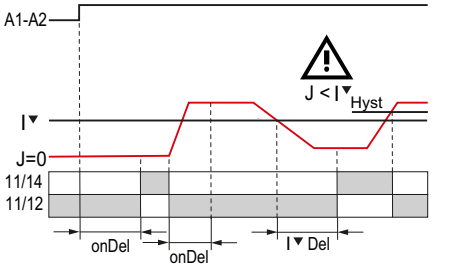
I▲ I▼	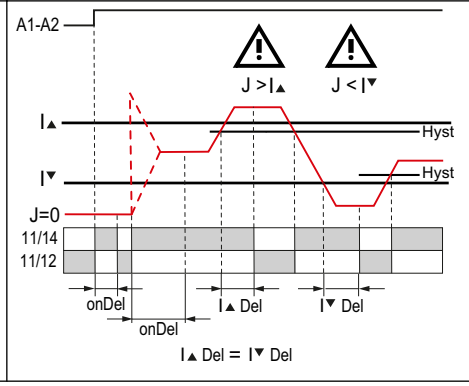	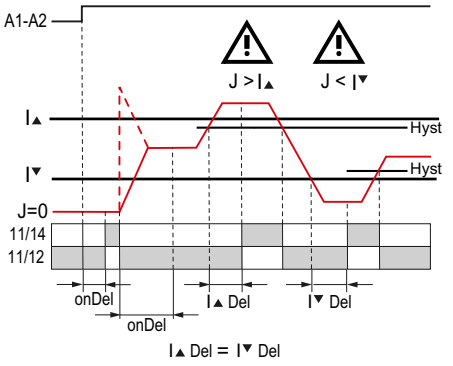

J = Currently measured current value

I = set threshold value for the current

7.4 Operation

Parameters

Parameterization of the devices is possible locally using the display and the three keys.

Parameter information

The table below shows the settable parameter information of the 3UG4621 and 3UG4622 current monitoring relays:

Table 7-2 Parmeter information, 3UG4621 and 3UG4622 current monitoring relays with digital setting

Menu level	Parameters	Setting range		Increment	Factory setting
		Minimum value	Maximum value		
"RUN"	Threshold for undershoot (I▼)	3.0 mA or OFF[1)] 0.05 A or OFF[2)]	500 mA[1)] 10.0 A[2)]	0.1 mA[1)] 0.01 A[2)]	50 mA[1)] 1.5 A[2)]
"RUN"	Threshold for overshoot (I▲)	3.0 mA[1)] 0.05 A[2)]	500 mA or OFF[1)] 10.0 A or OFF[2)]	0.1 mA[1)] 0.01 A[2)]	150 mA[1)] 2.5 A[2)]
"SET"	Hysteresis (Hyst)	0.1 mA[1)] 0.01 A[2)]	250.0 mA[1)] 5.0 A[2)]	0.1 mA[1)] 0.01 A[2)]	10.0 mA[1)] 0.5 A[2)]
"SET"	ON-delay time (onDel)	0.1 s	20 s	0.1 s	0.1 s
"SET"	Tripping delay time (I↕Del)	0.1 s	20 s	0.1 s	0.1 s
"SET"	Reset response (Mem)	no = Autoreset	yes = Hand-RESET	--	no = Autoreset
"SET"	Relay switching behavior (closed-circuit principle NC / open-circuit principle NO)	NC / U_s = on or NO / I > 3 mA[1)] NC / U_s = on or NO / I > 50 mA[2)]		--	NC / U_s = on

1) 3UG4621 current monitoring relay

2) 3UG4622 current monitoring relay

Note

"Overshoot" monitoring mode is activated when the undershoot threshold is set to OFF.

"Undershoot" monitoring mode is activated when the overshoot threshold is set to OFF.

Note

Deactivating monitoring

If the upper and lower threshold values are deactivated (OFF), monitoring will cease for:

- Current overshoot
- Current undershoot

The up-to-date measured value is displayed permanently.

The parameters are described in the Chapter "Parameters (Page 265)".

Menu-based operation is described in the Chapter "Menu-based operation (Page 37)".

7.5 Diagnostics

7.5.1 Indications on the display

Display information

The display is divided into three different areas.

① Current measured value or fault symbol
② Type of monitoring
③ Symbol of the changeover contact

Meaning of the information on the display

Note

Indications in the event of a fault

The symbols on the display flash to indicate an error.

The following statuses and faults are indicated on the display as a diagnostics message with flashing symbols:

Display areas	Symbol	Meaning
①	5.0A	Displays the measured current
②		Monitoring for current overshoot
②		Monitoring for current undershoot
②	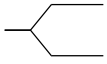	Range monitoring (monitoring for current overshoot and current undershoot)
②	◄	Current is in correct range
②	▲	A current overshoot has occurred
②	▼	A current undershoot has occurred
③		• Not flashing: Relay contact 11/12 open, relay contact 11/14 closed • Flashing: Delay time (ON-delay or tripping delay) running • Masked out: Relay contact 11/12 closed, relay contact 11/14 open

You will find more information about the switching behavior of the output relay in Chapter "Functions (Page 114)."

7.5.2 Reset

RESET

How the outputs are reset depends on the "Reset response" parameter (see Chapter "Reset response (Page 265)").

The following settings can be selected:

- Automatic reset (Memory = O / Mem = no)
  The device is reset automatically as soon as a previously occurring error has been dealt with.
- Manual RESET (Memory = I / Mem = yes)
  To reset the devices with digital setting, it is necessary to press both arrow keys simultaneously for more than 2.5 s after removal of the cause of error. If the cause of the error has not been removed, a new error message appears immediately. Alternatively, the devices can be reset by switching the rated control supply voltage on and off.

7.6 Circuit diagrams

7.6.1 Internal circuit diagrams

Internal circuit diagrams 3UG4621 / 3UG4622 current monitoring relays

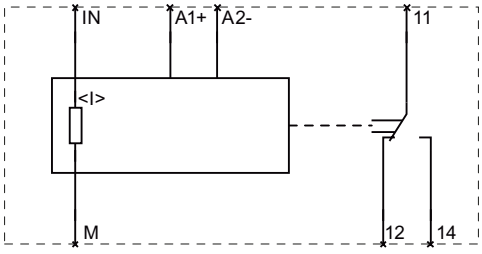

Note

On the 24 V AC / DC version of the 3UG4621/22-.AA30, terminals A2 and M (GND) are electrically connected in the device! The load current must flow through terminal M (GND).

On the 24 to 240 V AC/DC versions of the 3UG4621/22-.AW30, terminals A2 and M (GND) are electrically separated!

7.6.2 Wiring examples (3UG46..-.AW30)

Single-phase operation

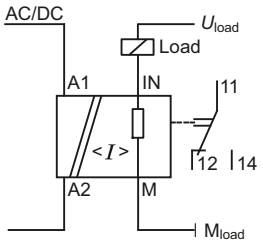

3UG462.-.AW30 single-phase operation

Three-phase operation

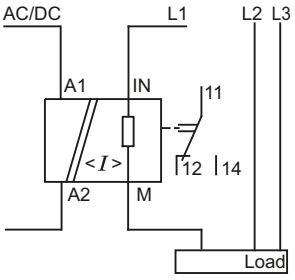

3UG462.-.AW30 three-phase operation

7.6.3 Wiring examples (3UG462.-.AA30)

Note

If this arrangement is not complied with, the monitoring relay may be destroyed and the short-circuit current may damage the plant!

Operation with a **separate** control circuit and load current circuit

- single-phase

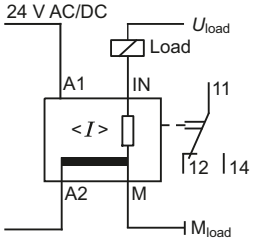

- three-phase

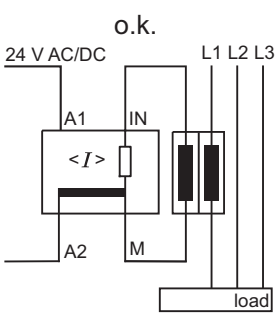

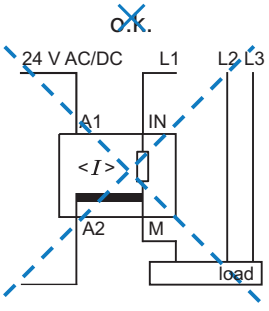

Operation with a **common** control circuit and load current circuit

- single-phase

o.k.

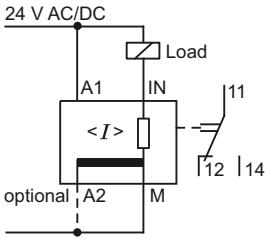

o.k.

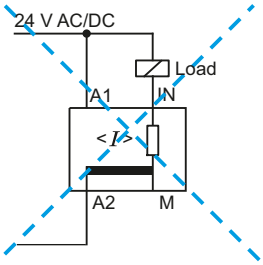

Note

Configuration

In the case of 3UG462.-.AA30, A2 and M (GND) are internally electrically connected!

If the load to be monitored and the current monitoring relay are powered from the same system, terminal A2 is not required!

The load current must always flow away through M (GND), otherwise the current monitoring relay may be destroyed!

7.7 Technical data

Technical data sheet

You can also find the technical data of the product at Siemens Industry Online Support (https://support.industry.siemens.com/cs/ww/en/ps/16367/td).

1. Enter the full article number of the desired device in the "Product" field, and confirm with the Enter key.
2. Click the "Technical data" link.

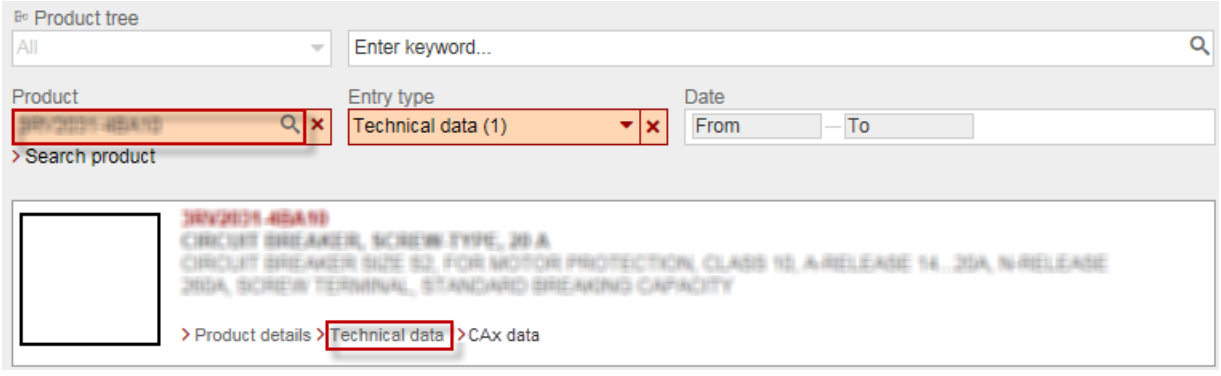

3UG4625 residual current monitoring relay with 3UL23 transformer

8

8.1 Application areas

Application areas

Residual current monitoring relays are used in industry to:

- Protect systems from damage caused by fault currents
- Prevent production losses caused by unplanned downtime
- Perform maintenance to meet all demands

3UG4625 residual current monitoring relays are used in conjunction with 3UL23 residual current transformers to monitor systems where environmental conditions increase the chance of higher fault currents. The devices are used for applications including in the following areas:

Table 8-1 Application areas of 3UG4625 residual current monitoring relays

Cause of fault	Application
• Dust deposits on terminals	• Woodworking, grain mills
• Increased levels of humidity	• Mining, power supply containers
• Capacitive fault currents as "basic fault load"	• For large systems (line length)
• Porous cables and lines	• Motor winding insulation
• Diminishing insulation caused by material wear	• Furnaces

Note

3UG4625 residual current monitoring relays monitor devices and systems for their correct function.

They are **not** suitable for personal protection or protection from fires.

8.2 Operator controls and connection terminals

3UG4625 front view/terminal labeling

Front view	Description	
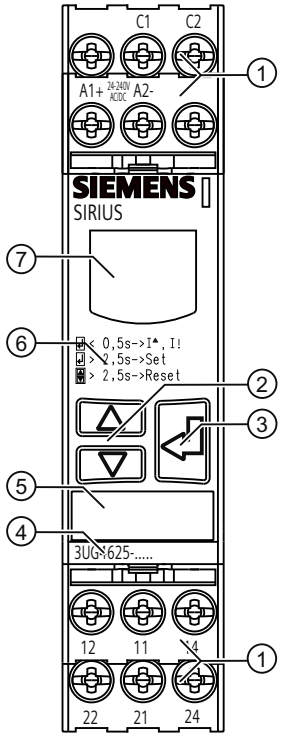	**Position digits**	
	①	Terminal block (removable): Connection is possible using screw terminals or spring-loaded terminals.
	②	Arrow keys for menu navigation
	③	SET key for menu navigation
	④	Device article number
	⑤	Label
	⑥	Legend for menu
	⑦	Display for parameterization, actual-value indication, and diagnostics
	Terminal labels	
	A1+	Rated control supply voltage ~ / +
	A2-	Rated control supply voltage ~ / -
	C1	Connection for 3UL23 residual current transformer
	C2	
	12	Output relay K1 CO contact NC contact (alarm output)
	11	Output relay K1 CO contact root
	14	Output relay K1 CO contact NO contact
	22	Output relay K2 CO contact NC contact (warning output)
	21	Output relay K2 CO contact root
	24	Output relay K2 CO contact NO contact

You can find additional information on the connection terminals and the permissible conductor cross-sections in the Chapter "Connection methods (Page 18)".

You can find information on connecting in the Chapter "Circuit diagrams (Page 137)".

8.3 Functions

General functionality

3UG4625 residual current monitoring relays are supplied with a rated control supply voltage of 24 to 240 V AC/DC (rms value), 50/60 Hz via terminals A1+ and A2-.

3UG4625 residual current monitoring relays are equipped with a display and are parameterized with three keys.

You will find the setting ranges and factory settings of the available parameters in Chapter "Operation (Page 134)".

You will find a description of the individual parameters in Chapter "Parameters (Page 265)".

The main conductors and, if present, the neutral conductor to which the load is connected, are routed through the opening of the ring core of a 3UL23 residual current transformer. There is a secondary winding around this ring core to which the 3UG4625 residual current monitoring relay is connected.

In fault-free operation of a system, the sum of inflowing and outflowing currents equals zero. No current is then induced in the secondary winding of the residual current transformer.

When an insulation error occurs, for example, the sum of the inflowing currents is greater than the sum of the outflowing currents.

The residual current induces a secondary current in the secondary winding of the transformer. This current is evaluated in the monitoring relay and used to display the current residual current and to switch the output relays when the set warning threshold or the tripping threshold is overshot.

To ensure a maximum plant availability 3UG4625 residual current monitoring relays focus on the following features:

- **High degree of measuring accuracy**
  3UG4625 residual current monitoring relays in combination with 3UL23 residual current transformers operate with a measuring accuracy of -7.5 %/+7.5 %. This enables set limit values to be monitored very precisely. False tripping caused by measuring errors is minimized.
- **Adjustable delay times**
  The ON-delay time of 3UG4625 residual current monitoring relays can be configured freely, enabling fading out of fault currents due to high input currents that are measured during motor start-up only. Short-term fault currents or emitted interference can be easily faded out using the adjustable tripping delay time. For more information please see the Chapter "Measuring accuracy (Page 126)".
- **Wide-range supply voltage**
  3UG4625 residual current monitoring relays can be operated at an input voltage of between 24 and 240 V AC/DC. This not only ensures that devices can be used worldwide, but that temporary supply voltage dips do not cause a failure of the monitoring function, that is, plant stoppage.
  The switching response of the relay outputs can be set to open-circuit principle (NO) if you intend to continue plant operation even if the monitoring function fails. This means only actively determined fault currents are reported via the relay outputs.
- **Permanent self-monitoring**
  The permanent self-monitoring feature of 3UG4625 ensures reliable system monitoring. The connected 3UL23 residual current transformer is also permanently monitored for open-circuit or short-circuit. As a result, cyclic manual tests to ensure its function are obsolete. Regardless of this, it is possible at any time to test the output relays for switching capability. Pressing the Set button for longer than 2.5 s will call up parameter assignment mode. This will cause the output relays to switch to the fault state as a safety precaution. Proceed as described above to quit parameter assignment mode. The output relay will once again switch back to its normal operating state.

Measuring accuracy

The combination of 3UG4625 residual current monitoring relay and 3UL23 residual current transformer is designed so that a warning or alarm is triggered at the latest upon exceeding the set limit values. To safeguard this function, slightly higher fault currents than those actually measured are displayed and compared with the set limit values.

The measuring accuracy is -7.5 %/+7.5 % of the value displayed. This takes into account the measuring accuracy of monitoring relay and residual current transformer.

Limits of fault current measurement

In the event of increasing primary currents, transformer production tolerances, imbalances in the cable routing and current loads in individual cables increasingly cause what appear to be fault currents that are detected by the evaluation units.
An increased false tripping may occur if excessively low monitoring limit values have been set at high primary currents. Such tolerances also mean that the measuring accuracy no longer corresponds to the range of between -7.5 %/+7.5 %.
To avoid these types of measuring errors and false tripping, we recommend to set the limit values to the minimum values listed in the following graphic, depending on the applicable primary current.

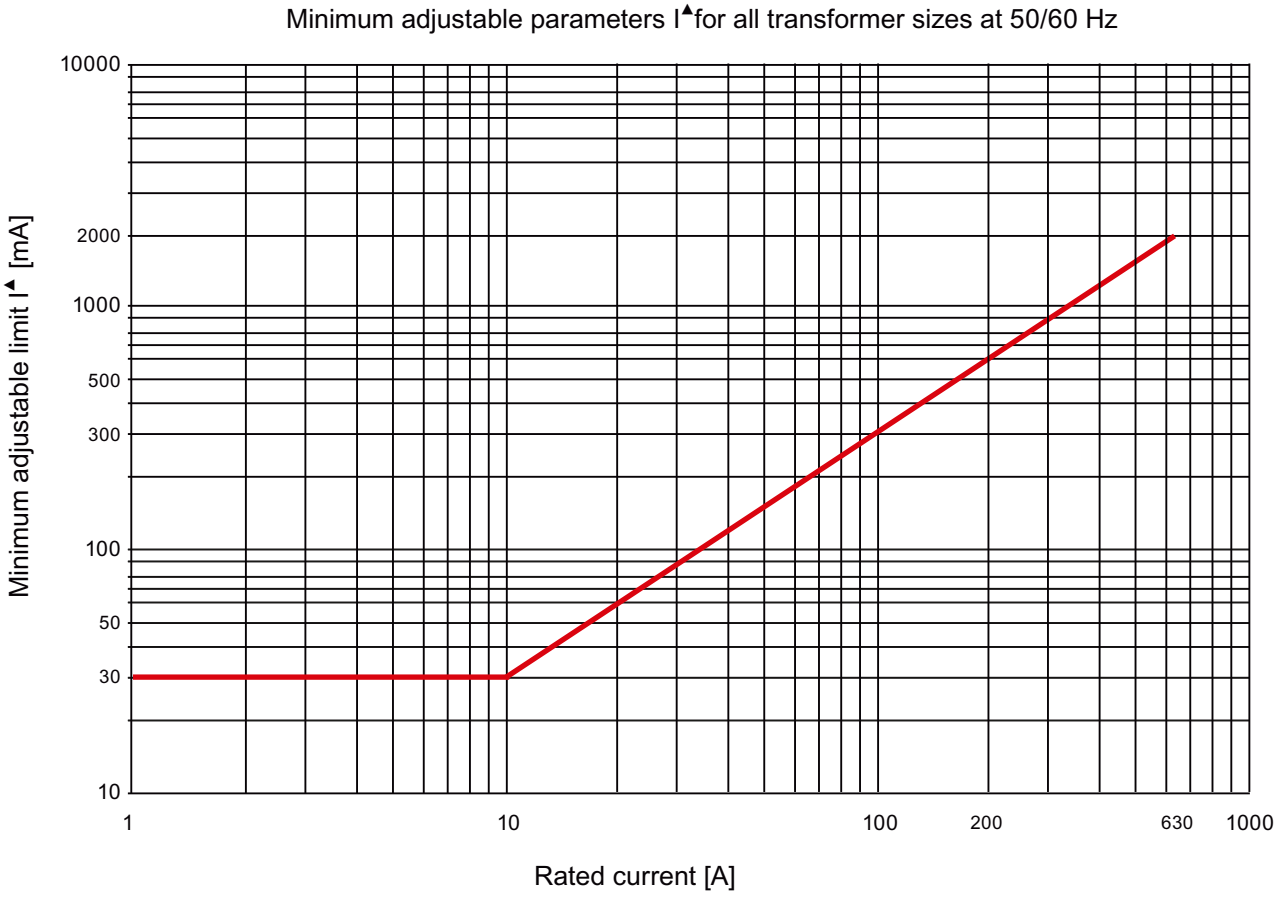

If monitoring is required within limit values that are lower than those recommended, we recommend the use of delay times, particularly if false tripping occurs exclusively during motor start-up.
If delay times do not lead to the desired result, the use of shield sleeves may considerably lower the minimum possible monitoring limit.
For more information see Chapters "Installation specifications (Page 237)" and "Potential for optimization (Page 240)".

The monitored current waveforms also have a strong influence on the measuring accuracy. In the case of loads with generalized phase control, deviations from the measuring accuracy can occur when monitoring for high residual current limits. The cause of this is the extreme difference between the monitored rms values and the peak values of the residual current. The more extreme the generalized phase control, the shorter the time during which current flows, and the lower the resulting rms value. To achieve and monitor a high rms value in such a case, an extremely high peak value of the residual current is necessary. In the case of high currents, current transformers tend towards saturation in which a further increase in current on the primary side does not result in an equivalent increase on the secondary side. In the case of extreme peak values of the residual current, the measuring accuracy suffers as a result of this principle. Due to the great difference between the peak value and the rms value, monitoring for lower limits is useful.

Monitoring

Initialization

When the monitoring relay is connected to the supply voltage, the initialization phase starts and internal functional tests are performed. During the initialization phase that lasts approximately 1.6 s, the connection to the 3UL23 residual-current transformer is one of the things that is checked. During this time, no measurement or monitoring of the fault current takes place. - - A is shown on the display. The relay switching behavior during the initialization phase can be determined with the help of the "Init" parameter. In the factory setting ("Init" parameter = **ERR**), the output relays switch to the fault state until completion of the initialization phase because there is no valid measuring result of the fault current.

If the parameter is set to "OK", it is assumed that there is no internal fault and the fault current will be within the set limits. For this reason, the output relays are switched to the work position when the supply voltage is present.
This parameter setting is useful if the residual current monitoring relays are not permanently connected to the supply voltage and instead are to be started immediately when the monitored application is started, and output relays in the alarm position result in immediate shutdown of the application again, e.g. when connecting a contactor with interruption of the self-locking by the output relay contacts.

After completion of the initialization phase, a permanent self-test takes place without interrupting the monitoring function.

Normal operation

If the measured fault current exceeds the set warning threshold (I!), the associated CO contact 21-22-24 changes the switching state without delay. On the display, the arrows for "threshold overshot" and "measured value within the set limits" (-▲-) flash alternately as an indication.

On the display, the currently displayed measuring value and the symbol for overshoot flash.

Note

Currents with line frequencies of between 16 and 400 Hz can be monitored by 3UG4625 residual current monitoring relays in conjunction with 3UL23 residual current transformers!

Startup delay

The set ON-delay time is triggered if the fault current overshoots the lower measuring range limit of 20 mA (onDel). During this time, exceeding the set limit values will not trigger a relay response of the CO contacts.
To start a drive, the output relay switches to the correct state during the ON-delay time (onDel), depending on the selected open-circuit principle or closed-circuit principle, even if the measured value remains above the set value.

Tripping delay

If the measured value exceeds the set threshold (I▲) after expiry of the ON-delay time (onDel), the set tripping delay time (I▲Del) starts and the relay symbol flashes. After expiry of this time, the output relay K1 changes the switching state. Exceeding the set warning threshold will cause output relay K2 to switch immediately without taking into account the tripping delay time. On the display, the actual measured value and the symbol for overshoot flash.

You will find the switching states of the output relays below in section "Function diagrams" and in Chapter "Diagnostics (Page 135)".

Tripping conditions

The combination of 3UG4625 residual current monitoring relay and 3UL23 residual current transformer responds according to the following tripping conditions:

Residual current monitoring relays	Fault current
No tripping	0 to 85 % of the set threshold
Tripping not defined	85 to 100 % of the set threshold
Tripping	>= 100 % of the set threshold

3UL23 residual current transformer

3UL23 residual current transformers can be used in conjunction with 3UG4625 residual current monitoring relays to detect fault currents in machines and systems.

3UL23 residual current transformers are suitable for detecting pure AC fault currents and AC fault currents with a pulsating direct-current component.

These necessary accessories are described in Chapter "3UL23 residual current transformers for 3UG4625 monitoring relays (Page 235)."

Note

Do not ground the neutral conductor downstream of the residual current transformer as otherwise fault current monitoring functions can no longer be ensured.

Function diagrams for 3UG4625

Note

Difference between Hyst and Hysteresis

In the following diagrams, the term "Hyst" refers to the "Hysteresis" parameter. The "Hysteresis" parameter refers to the monitored limit values (I▲) and can be set in the SET menu.

However, "Hyst = 5 %" refers to the warning thresholds (I!) and is permanently set to 5 %.

Display	**Memory = no; Init = ERR** **Relay switching behavior = NO (open-circuit principle)**
I▲ / I! Mem = no Init = ERR	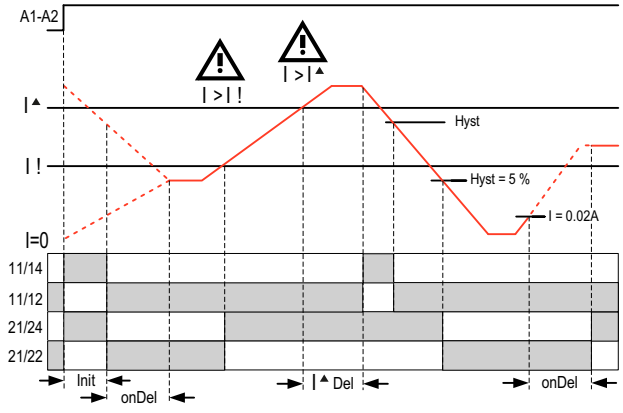

Display	Memory = no; Init = ERR Relay switching behavior = NC (closed-circuit principle)
I▲ / I! Mem = no Init = ERR	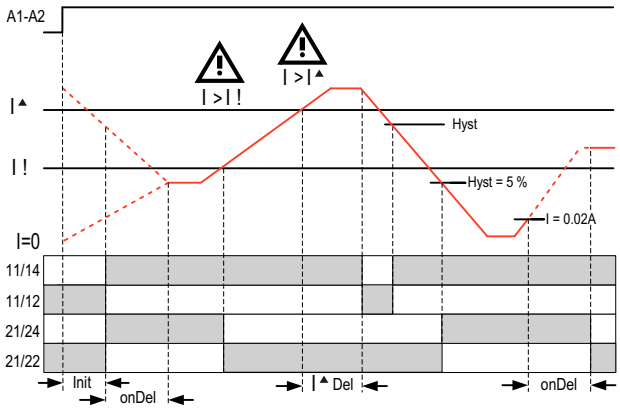

Display	Memory = yes; Init = ERR Relay switching behavior = NO (open-circuit principle)
I▲ / I! Mem = yes Init = ERR	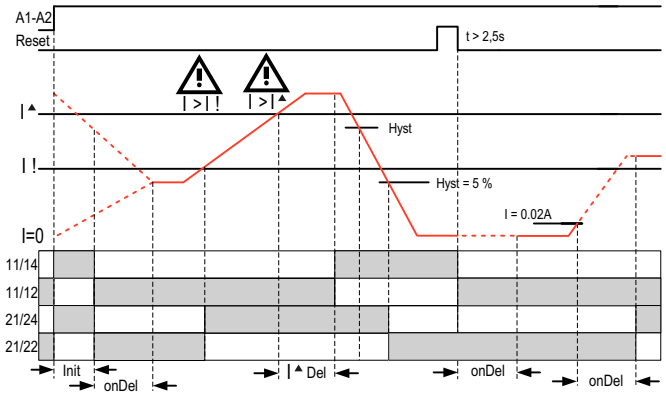

Display	Memory = yes; Init = ERR Relay switching behavior = NC (closed-circuit principle)
I▲ / I! Mem = yes Init = ERR	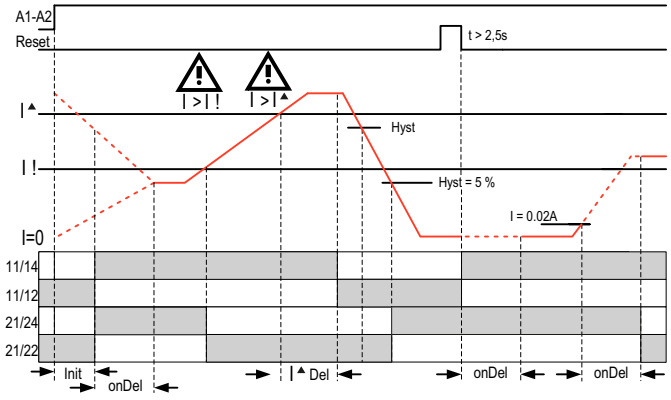

Display	Memory = no; Init = OK Relay switching behavior = NO (open-circuit principle)
I▲ / I! Mem = no Init = OK	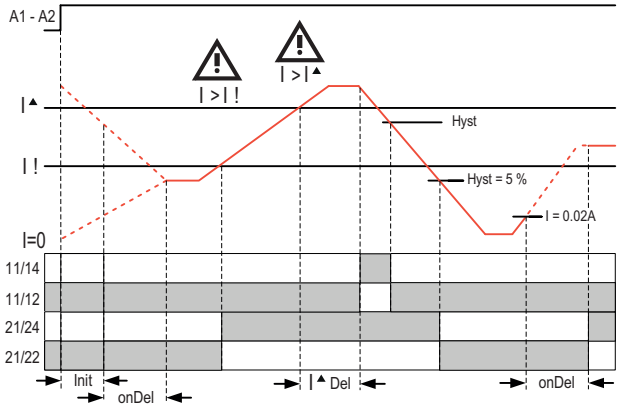

Display	Memory = no; Init = OK Relay switching behavior = NC (closed-circuit principle)
I▲ / I! Mem = no Init = OK	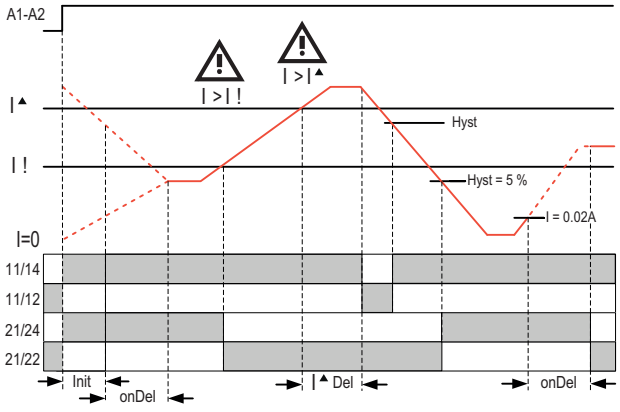

Display	Memory = yes; Init = OK Relay switching behavior = NO (open-circuit principle)
I▲ / I! Mem = yes Init = OK	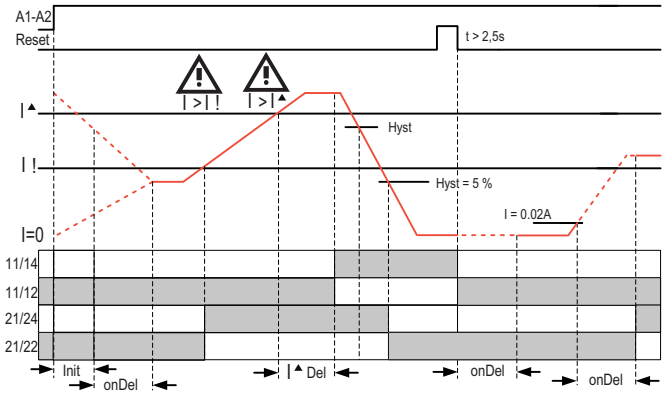

Display	Memory = yes; Init = OK Relay switching behavior = NC (closed-circuit principle)
I▲ / I! Mem = yes Init = OK	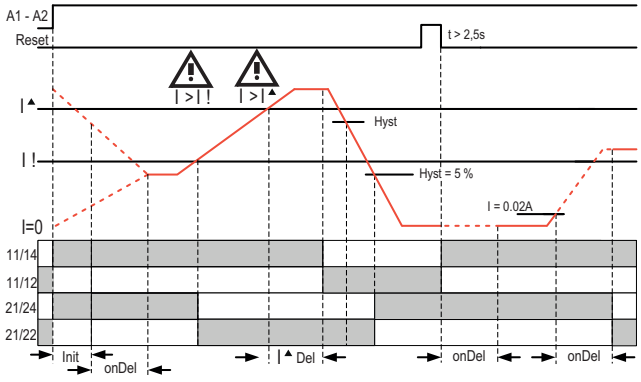

Note

The system is immediately switched off in the event of an open-circuit or short-circuit in the transformer connection cables.

8.4 Operation

Parameters

Parameterization of the devices is possible locally using the display and the three keys.

Parameter information

The following table lists the adjustable parameter information for the 3UG4625 residual current monitoring relay:

Table 8-2 Parameter information, 3UG4625 residual current monitoring relays with digital setting

Menu level	Parameters	Setting range		Increment	Factory setting
		Minimum value	Maximum value		
"RUN"	Threshold for overshoot (I▲)	0.03 A	40.0 A	Depending on the value, 0.01 A or 0.1 A	1.0 A
"RUN"	Warning threshold for overshoot (I!)	0.03 A or OFF	40.0 A	Depending on the value, 0.01 A or 0.1 A	0.5 A

Menu level	Parameters	Setting range		Increment	Factory setting
		Minimum value	Maximum value		
"SET"	Hysteresis (Hyst)	OFF (0 %)	50 %	5 %	5 %
"SET"	Initialization (Init)	ERR	OK	--	ERR
"SET"	ON-delay time (onDel)	0.1 s or OFF	20.0 s	0.1 s	OFF
"SET"	Tripping delay time (I▲Del)	0.1 s or OFF	20.0 s	0.1 s	0.1 s
"SET"	Reset response (Mem)	no = Autoreset	yes = Hand-RESET	--	no = Autoreset
"SET"	Relay switching behavior (closed-circuit principle NC / open-circuit principle NO)	NC or NO		--	NC

Note

Various parameters are deactivated by setting OFF.

The parameters are described in the Chapter "Parameters (Page 265)".

Menu-based operation is described in the Chapter "Menu-based operation (Page 37)".

The 3UL23 residual current transformers used cover the entire fault current range from 0.03 to 40 A in all sizes.

For more information on the technical data of 3UL23 residual current transformers see Chapter "Installing (Page 246)".

8.5 Diagnostics

8.5.1 Indications on the display

Display information

The display is divided into three different areas.

① Current measured value or fault symbol
② Type of monitoring
③ Symbols of the changeover contacts

Meaning of the information on the display

Note

Indications in the event of a fault

The symbols on the display flash to indicate an error.

The following statuses and faults are indicated on the display as a diagnostics message with the following symbols:

Display area	Symbol	Meaning
①	5.00A	• Not flashing: the currently measured current is displayed • Flashing: A current overshoot has occurred (the currently measured current flashes on the display)
②		Monitoring for current overshoot
②	◀	Current is in correct range
②		Flashing alternately. The warning threshold has been exceeded
②	▲	Flashing: A current overshoot has occurred
③	I▲	• Not flashing: Relay contact 11/12 open, relay contact 11/14 closed • Flashing: Delay time (ON-delay or tripping delay) running • Masked out: Relay contact 11/12 closed, relay contact 11/14 open
③	I!	• Not flashing: Relay contact 21/22 open, relay contact 21/24 closed • Flashing: Delay time (ON-delay) running • Masked out: Relay contact 21/22 closed, relay contact 21/24 open
①	---A	Self-test active, no measurements
①	I▲▲▲	Measurement range exceeded (> 40 A)
①	0.00A	Fallen below measurement range
①		Open circuit (flashing)
①		Short-circuit (flashing)

You will find more information about the switching behavior of the output relay in Chapter "Functions (Page 126)."

8.5.2 Reset

RESET

How the outputs are reset depends on the "Reset response" parameter (see Chapter "Reset response (Page 265)").

The following settings can be selected:

- Automatic reset (Memory = O / Mem = no)
  The device is reset automatically as soon as a previously occurring error has been dealt with.
- Manual RESET (Memory = I / Mem = yes)
  To reset the devices with digital setting, it is necessary to press both arrow keys simultaneously for more than 2.5 s after removal of the cause of error. If the cause of the error has not been removed, a new error message appears immediately. Alternatively, the devices can be reset by switching the rated control supply voltage on and off.

Note

The warning threshold is always reset by autoreset.

8.6 Circuit diagrams

8.6.1 Internal circuit diagrams

Internal circuit diagrams 3UG4625

3UG4625-.CW30 residual current monitoring relay, 24 to 240 V

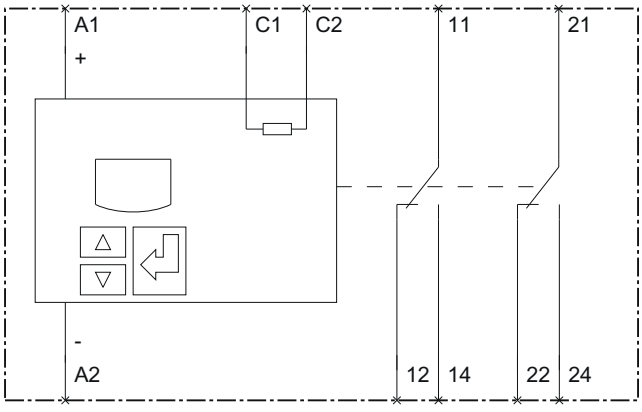

Note

3UG4625 residual current monitoring relays are suitable for operation with 3UL23 residual current transformers for external ground-fault monitoring. The output signal of the 3UL23 residual current transformer is connected to terminals C1 and C2 of the monitoring relay. To avoid interference injection, which could result in incorrect measurements, these connecting lines must be routed as parallel as possible and twisted, or shielded cables must be used.

8.6.2 Wiring examples

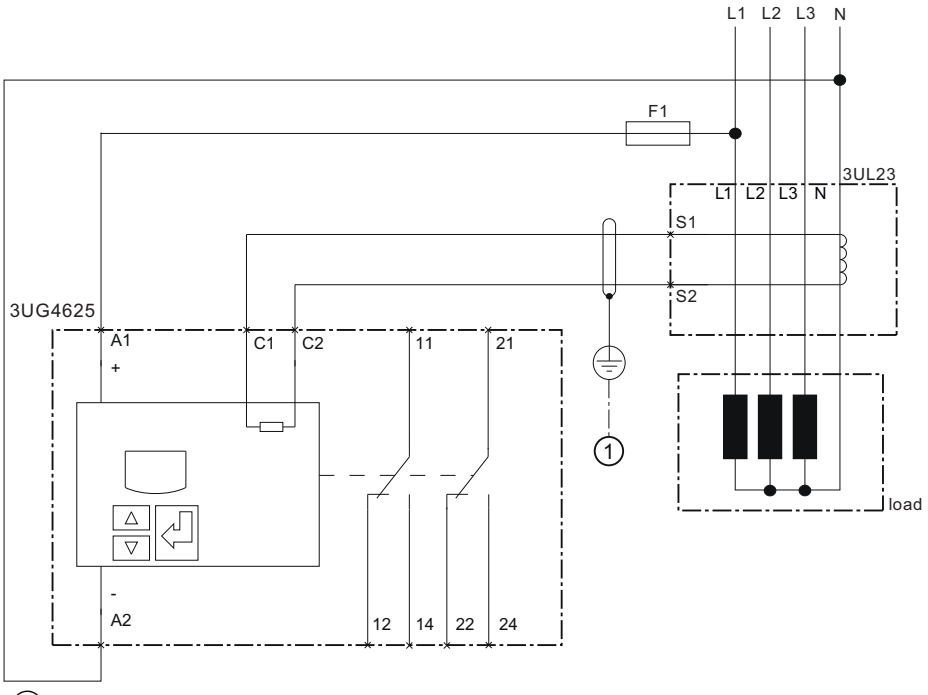

① Cable shielding recommended

Figure 8-1 Wiring diagram of 3UG4625 with 3UL23

8.7 Technical data

Technical data sheet

You can also find the technical data of the product at Siemens Industry Online Support (https://support.industry.siemens.com/cs/ww/en/ps/16367/td).

1. Enter the full article number of the desired device in the "Product" field, and confirm with the Enter key.
2. Click the "Technical data" link.

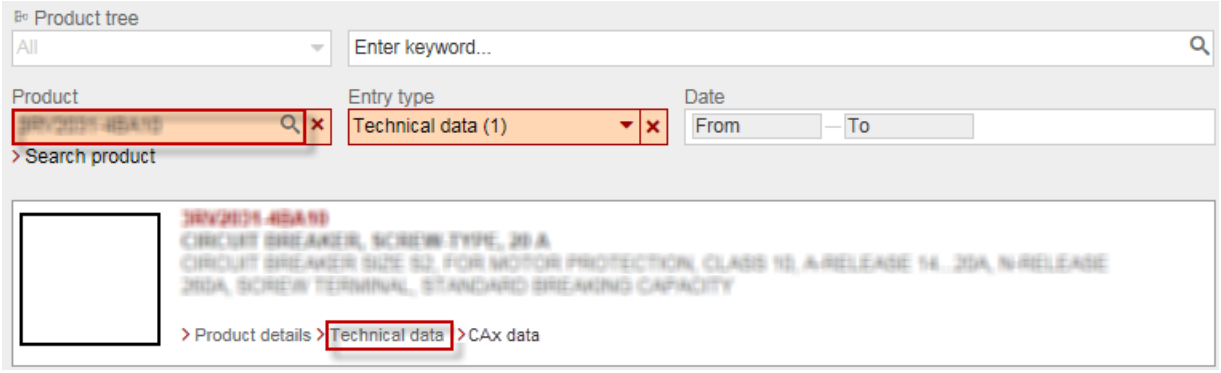

3UG458. insulation monitoring relay.

9

Overview

The 3UG458. insulation monitoring relays are used for monitoring the insulation resistance (in accordance with IEC 61557-8) between ungrounded single-phase or three-phase AC systems and a protective conductor.

The family comprises the following devices:

- Insulation monitoring relays for ungrounded AC systems with a rated system voltage of up to U_n = 400 V AC.
- Insulation monitoring relays for ungrounded AC systems, DC systems, and mixed AC/DC systems with a rated system voltage of up to U_n = 250 V AC and U_n = 300 V DC.
- Insulation monitoring relays for ungrounded AC systems, DC systems, and mixed AC/DC systems with a rated system voltage of up to U_n = 400 V AC and U_n = 600 V DC.
  The measuring range can be extended up to U_n = 690 V AC and U_n = 1000 V DC by using an upstream module.

Ungrounded, insulated systems (IT networks) are always used when high requirements are placed on the reliability of the power supply, e.g. emergency lighting. IT systems are supplied via an isolation transformer or voltage sources such as batteries or a generator. An insulation fault that occurs between an external conductor and ground represents a grounding of this conductor. This does not result in the closing of a circuit and operation can continue without hazard (single fault security). Before a second insulation fault occurs, the first fault must be corrected (e.g. in accordance with DIN VDE 0100-410). Insulation monitoring relays are used to implement this requirement. The insulation monitoring relays measure the resistance of the external conductor and the neutral conductor against ground, and immediately report a fault if the set insulation resistance is undershot. This procedure enables controlled shutdown, or correction of the fault without interrupting the power supply.

The insulation monitoring relays monitor the following fault types, depending on the version:

- Open circuit
- Incorrect settings
- Ungrounded, strictly AC systems for insulation faults
- Ungrounded, strictly DC systems for insulation faults
- Ungrounded, mixed DC systems and AC systems for insulation faults (e.g. AC systems with rectifiers or switched-mode power supplies)

Note

The use of two 3UG458 devices in a galvanically connected area (monitored area) is not permissible.

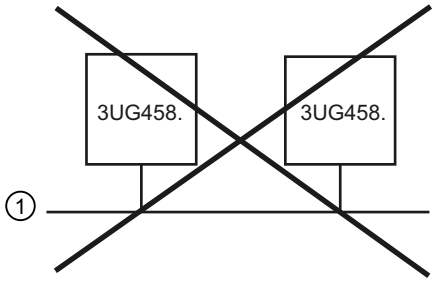

① Monitored area

9.1 Application areas

Application areas

The 3UG458. insulation monitoring relays are used in the following applications, for example:

Table 9-1 Application areas of the insulation monitoring relays

Function	Application
• Insulation monitor for ungrounded systems	• Emergency power supplies • Safety lighting • Industrial production plants with high availability requirements (chemical industry, automobile manufacture, printing) • Shipbuilding and railways • Mobile power generators (aircraft) • Renewable energies (wind energy and photovoltaic plants) • Mining industry

Note

The 3UG4582 and 3UG4583 insulation monitors are only suitable for use in systems with frequency converters (primary or secondary side) if operation with generated frequencies < 15Hz and > 400Hz is ruled out.
The 3UG4581 version is not suitable for operation with a frequency converter.

Table 9-2 Functions of the 3UG4581/3UG4582/3UG4583 insulation monitoring relays

Function	Insulation monitoring relays		
	3UG4581	3UG4582	3UG4583
Insulation monitoring			
Monitoring for open circuit	—	✓	✓[1)]
Monitoring for incorrect settings	—	—	✓

Function	Insulation monitoring relays		
	3UG4581	3UG4582	3UG4583
Control circuit monitoring	1p	1p	1p
Main circuit monitoring	1p, 3p, 3p + N	1p, 2p, 2p + N, 3p, 3p + N	1p, 2p, 2p + N, 3p, 3p + N

✓: Function available
1p: Monitoring is 1-phase
2p: Monitoring is 2-phase
2p + N: Monitoring is 2-phase + N conductor
3p: Monitoring is 3-phase
3p + N: Monitoring is 3-phase + N conductor
— : Function not available
[1] Configurable

9.2 Performance features of the insulation monitoring relays

General data

Table 9-3 General data of the 3UG4581/3UG4582/3UG4583 insulation monitoring relays

General data	Insulation monitoring relays		
	3UG4581	3UG4582	3UG4583
Setting range of the target pick-up values			
• 1 to 100 kΩ	✓	✓	✓
• 2 to 200 kΩ	—	—	✓
Rated voltage of the system to be monitored			
• 0 ... 250 V AC	—	✓	—
• 0 ... 400 V AC	✓	—	✓
• 0 ... 600 V AC	—	—	✓[1]
• 0 to 300 V DC	—	✓	—
• 0 to 600 V DC	—	—	✓
• 0 to 1000 V DC	—	—	✓[1]
Maximum discharge capacity of the system			
• 10 µF	✓	✓	—
• 20 µF	—	—	✓
Output contacts			
• 1 changeover contact	✓	✓	—
• 2 changeover contacts or 1 changeover contact + 1 changeover contact, adjustable	—	—	✓
Number of thresholds			

General data	Insulation monitoring relays		
	3UG4581	**3UG4582**	**3UG4583**
• 1	✓	✓	—
• 1 or 2, adjustable	—	—	✓
Functional principle	Closed-circuit principle	Closed-circuit principle	Open-circuit principle or closed-circuit principle, configurable
Rated control and supply voltage			
• 24 ... 240 V AC / DC	✓	✓	✓
Rated frequency			
• 15 ... 400 Hz	—	✓	✓
• 50 ... 60 Hz	✓	—	—
Autoreset or manual RESET	✓[2)]	✓[2)]	✓[2)]
Remote RESET	✓ via control input	✓ via control input	✓ via control input
Retentive fault memory	—	—	✓[2)]
Open-circuit detection	—	—	✓[2)]

✓: Function available

— : Function not available

1) With 3UG4983-.A voltage reducer module

2) Configurable

9.3 3UG4581 insulation monitoring relay

9.3.1 Operator controls and connection terminals

Front view/terminal labeling 3UG4581-1AW30

Front view	Description	
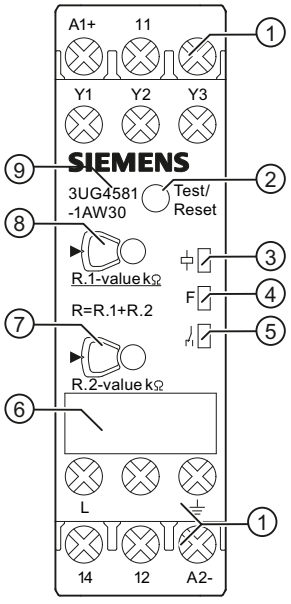	**Position digits**	
	①	Terminal block: Screw-type connections are possible.
	②	Test/RESET button[1]
	③	Status display: LED for device status (green)
	④	Status display: LED for monitoring status F (red)
	⑤	Status display: LED output contact status (yellow)
	⑥	Label
	⑦	Rotary knob for adjusting the insulation resistance (R.2 for the units position of R)
	⑧	Rotary knob for adjusting the insulation resistance (R.1 for the tens position of R) Setting value "0" is colored yellow.[2]
	⑨	Device article number
	Terminal labels	
	A1+	Rated control supply voltage ~ / +
	A2-	Rated control supply voltage ~ / -
	Y1	Control inputs; isolation control Y1-Y3: Remote test Y2-Y3: Remote reset/autoreset
	Y2	
	Y3	
	L	Measuring signal input, connection to phase or N conductor
	⏚	Measured signal input, grounding connection
	12	Output relay K1 CO contact NC contact
	11	Output relay K1 CO contact root
	14	Output relay K1 CO contact NO contact

[1] A test is only possible if there is no fault. A reset is only possible if the measured value is greater than the set threshold including the hysteresis.

[2] Information on setting accuracy

- at setting value "0", a setting accuracy of >15 % applies for R
- at setting value ">1", a setting accuracy of 6 % applies for R

You can find additional information on the connection terminals and the permissible conductor cross-sections in the Chapter "Technical data (Page 158)".

You can find information on connecting in the Chapter "Circuit diagrams (Page 154)".

Front view/terminal labeling 3UG4581-1AW31

Front view	Description	
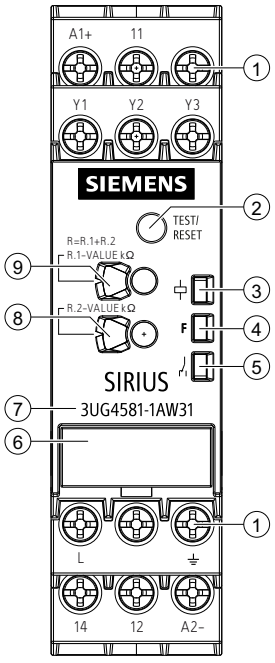	**Position digits**	
	①	Terminal block: Screw-type connections are possible.
	②	Test/RESET button[1]
	③	Status display: LED for device status ⏚ (green)
	④	Status display: LED for monitoring status F (red)
	⑤	Status display: LED output contact status ⎍ (yellow)
	⑥	Label
	⑦	Device article number
	⑧	Rotary knob for adjusting the insulation resistance (R.2 for the units position of R)
	⑨	Rotary knob for adjusting the insulation resistance (R.1 for the tens position of R)Setting value "0" is colored yellow.[2]
	Terminal labels	
	A1+	Rated control supply voltage ~ / +
	A2-	Rated control supply voltage ~ / -
	Y1	Control inputs; isolation control Y1-Y3: Remote test Y2-Y3: Remote reset/autoreset
	Y2	
	Y3	
	L	Measuring signal input, connection to phase or N conductor
	⏚	Measured signal input, grounding connection
	12	Output relay K1 CO contact NC contact
	11	Output relay K1 CO contact root
	14	Output relay K1 CO contact NO contact

[1] A test is only possible if there is no fault. A reset is only possible if the measured value is greater than the set threshold including the hysteresis.

[2] Information on setting accuracy

- at setting value "0", a setting accuracy of >15 % applies for R
- at setting value ">1", a setting accuracy of 6 % applies for R

You can find additional information on the connection terminals and the permissible conductor cross-sections in the Chapter "Technical data (Page 158)".

You can find information on connecting in the Chapter "Circuit diagrams (Page 154)".

Front view/terminal labeling 3UG4581-2AW31

Front view	Description	
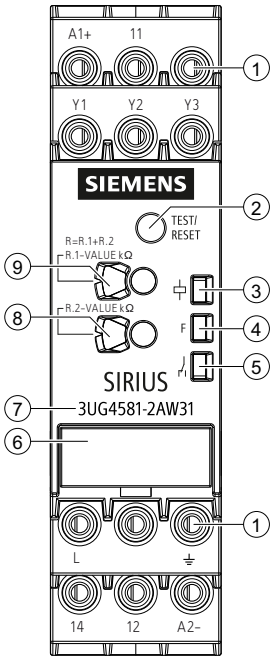	**Position digits**	
	①	Terminal block: Supports spring-loaded connection technology.
	②	Test/RESET button[1]
	③	Status display: LED for device status (green)
	④	Status display: LED for monitoring status F (red)
	⑤	Status display: LED output contact status (yellow)
	⑥	Label
	⑦	Device article number
	⑧	Rotary knob for adjusting the insulation resistance (R.2 for the units position of R)
	⑨	Rotary knob for adjusting the insulation resistance (R.1 for the tens position of R)Setting value "0" is colored yellow.[2]
	Terminal labels	
	A1+	Rated control supply voltage ~ / +
	A2-	Rated control supply voltage ~ / -
	Y1	Control inputs; isolation control
	Y2	Y1-Y3: Remote test
	Y3	Y2-Y3: Remote reset/autoreset
	L	Measuring signal input, connection to phase or N conductor
	⏚	Measured signal input, grounding connection
	12	Output relay K1 CO contact NC contact
	11	Output relay K1 CO contact root
	14	Output relay K1 CO contact NO contact

[1] A test is only possible if there is no fault. A reset is only possible if the measured value is greater than the set threshold including the hysteresis.

[2] Information on setting accuracy

- at setting value "0", a setting accuracy of >15 % applies for R
- at setting value ">1", a setting accuracy of 6 % applies for R

You can find additional information on the connection terminals and the permissible conductor cross-sections in the Chapter "Technical data (Page 158)".

You can find information on connecting in the Chapter "Circuit diagrams (Page 154)".

9.3.2 Functions

General functionality

The 3UG4581 insulation monitoring relays are supplied with a rated control and supply voltage of 24 V to 240 V AC/DC, and they monitor the insulation resistance in ungrounded AC systems in accordance with IEC 61557-8.

The devices can monitor control circuits (1-phase) and main circuits (3-phase). For this purpose, the insulation resistance between the system cables (terminal L) and system ground (terminal ⏚) is measured. Systems with rated system voltages U_n = 0 to 400 V AC (50 to 60 Hz) can be connected directly to the measuring inputs, and their insulation resistance can be monitored.

The 3UG4581 insulation monitoring relays have two rotary buttons for adjusting the insulation resistance R and a test/RESET button for performing an internal test on the device, or for resetting the device.

If the measured value drops below the set threshold, the output relays are set to fault status.

For systems with voltages over 400 V AC, the 3UG4583 insulation monitoring relays with 3UG4983 voltage reducer module can be used for system voltages to 690 V AC.

You will find the adjustment ranges and factory settings of the available parameters in Chapter "Operator control (Page 152)".

You will find a description of the individual parameters in the Chapter "Parameters (Page 265)".

Measuring procedure of the 3UG4581 insulation monitoring relay

An overlaid DC measuring signal is used on the 3UG4581 insulation monitoring relay for measuring. The insulation resistance of the system is calculated with the help of the overlaid DC measuring voltage and the resulting current.

The 3UG4581 insulation monitoring relays can be configured to the relevant application conditions and are therefore versatile in use.

Monitoring

The system to be monitored is connected to terminal L (connection to phase or N conductor). The ground potential is connected to terminal ⏚.

The devices work according to the closed-circuit principle NC.

After applying the rated control and supply voltage, the insulation monitoring relay goes through an internal test that checks the proper functioning of the operational device. The test encompasses an internal test of the device at hardware and firmware level, as well as system diagnostics with calculation of the first measured value of the insulation resistance. If there are no internal device faults or external faults on completion of this test, output relay K1 picks up. This test can take several seconds depending on individual system properties.

If the measured value undershoots the set threshold, output relay K1 drops out. If the measured value overshoots the threshold including hysteresis, output relay K1 picks up (if autoreset is active). All operating statuses of the insulation monitoring relay are displayed via three LEDs.

Note

If the continuously present rated system voltage is greater than 240 V, a minimum gap of 10 mm must be maintained to the next device.

You will find the switching states of the output relay below in the section "Functions (Page 148)" and in Chapter "Diagnostics (Page 153)".

Reset behavior and memory function

The device features an autoreset that resets output relay K1 to its original state after an fault message and rectification of the fault that has occurred. As well as autoreset, the devices can also be set to manual RESET by means of external switching.

If the insulation resistance is greater than the set limit value including hysteresis, the output relay remains de-energized when manual RESET is set and is not energized again until the combined Test/Reset button is pressed or the remote reset (terminals Y2-Y3) is activated. Another method of resetting the device is by switching the supply voltage off and on again, provided the fault is not stored in retentive (non-volatile) memory.

Connection Y2-Y3	Reset options
	1) On the front (Test/Reset button) 2) Remote reset (remote button with NC function) 3) A1+ / A2- (switching the supply voltage off/on)
	1) On the front (Test/Reset button) 2) A1+ / A2- (switching the supply voltage off/on)
	1) Autoreset (factory setting)

Function diagrams 3UG4581

Relay switching behavior = NC
(closed-circuit principle)

Without fault storage, autoreset

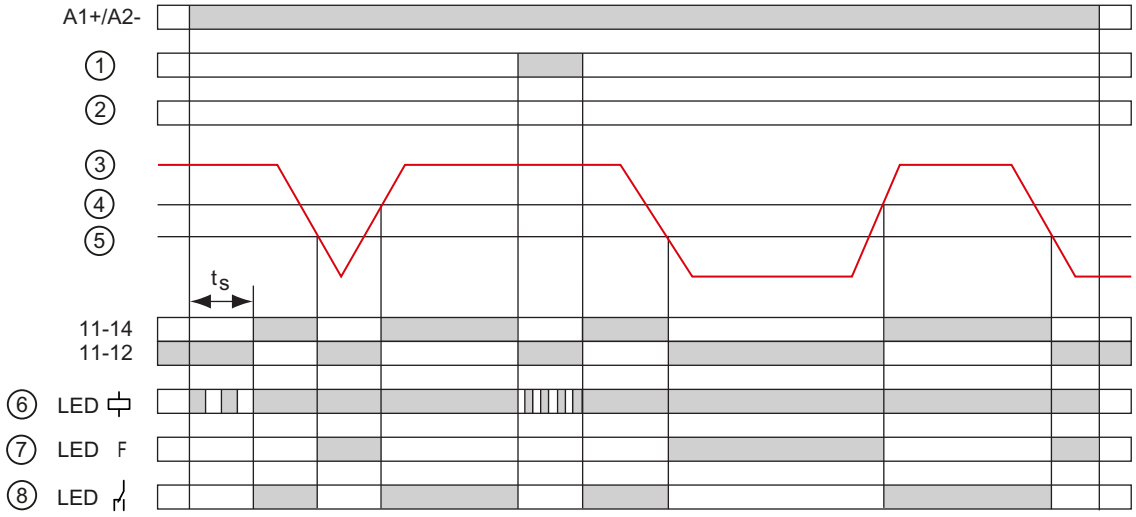

1 Test (Y1-Y3)
2 Reset (Y2-Y3)
3 Measured value
4 Hysteresis
5 Threshold
6 Green
7 Red
8 Yellow

t_s = Time for internal device test after applying the supply voltage

Relay switching behavior = NC
(closed-circuit principle)

With fault storage, manual RESET

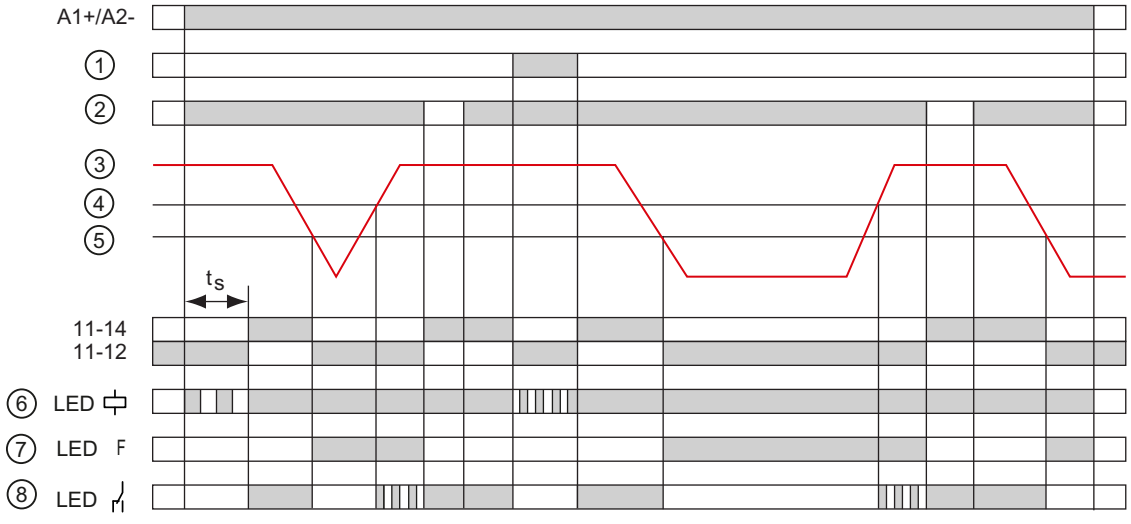

① Test (Y1-Y3)
② Reset (Y2-Y3)
③ Measured value
④ Hysteresis
⑤ Threshold
⑥ Green
⑦ Red
⑧ Yellow

t_s = Time for internal device test after applying the supply voltage

9.3.3 Operator control

Parameters

The following parameters can be set on the two ten-level rotary buttons (absolute scale) with the help of a screwdriver:

Table 9-4 Parameter information, 3UG4581 insulation monitoring relay

Parameters	Control elements [1]	Setting range		Increment
		Minimum value	Maximum value	
Threshold for undershoot (tens position of R) (R.1-value)[2]	8	0 kΩ	90 kΩ	10 kΩ increments
Threshold for undershoot (R.2-value)[3]	7	1 kΩ	10 kΩ	1 kΩ increments
Reset response	2	Deactivated	Activated	--

[1] The position digits refer to the front view in Chapter "Operator controls and connection terminals (Page 145)".

[2] By operating the rotary button, the tens position of the threshold for undershoot can be selected.

[3] By operating the rotary button, the units position of the threshold for undershoot can be selected

The threshold is derived from the sum of the two set values. If, for example, threshold R.1-value is set to 70 and threshold R.2-value is set to 8, threshold R1 corresponds to 78 kΩ.

Chapter "Internal circuit diagrams (Page 154)" shows examples for the different monitoring modes.

The parameters are defined in the Chapter "Parameters (Page 265)".

Tools required

The same screwdriver can be used to set the parameters as for wiring the insulation monitoring relays.

Carrying out the self-test

The test function is only possible if there is no fault.

By operating the combined test/reset button, the insulation monitoring relay goes through an internal test that checks the proper functioning of the operational device.

The output relays do not pick up or they switch to the fault status while the Test/Reset button is pressed, while control contact Y1-Y3 is closed, or while the test functions execute after application of the supply voltage. The test function can be started again at any time via the Test/Reset button on the front or via a remote test button. The graphic below shows the connection of the button for the remote test.

Figure 9-1 Remote test button

9.3.4 Diagnostics

9.3.4.1 Diagnostics with LEDs

Status display

The following information indicates the operating state on the 3UG4581 insulation monitoring relays:

Operating state	LED ⏚ (green)	LED F (red)	LED ⚠ (yellow)
Self-test (after U_S = on)	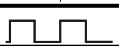	Off	Off
No fault	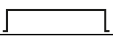	Off	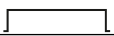
Insulation fault (threshold undershot)			Off
System leakage capacitance too high at device startup			Off
Measuring result invalid			Off
Internal fault	Off		Off
Test function active		Off	Off
Manual RESET possible[1)]		[2)]	

1) The device has tripped following an insulation fault. The fault has been stored and the insulation resistance has reverted to a value above the set threshold including hysteresis.

2) Dependent on the fault.

The switching behavior of the output relay is shown in Chapter "Functions (Page 148)".

9.3.5 Circuit diagrams

9.3.5.1 Internal circuit diagrams

Internal circuit diagram 3UG4581-.AW3. insulation monitoring relay

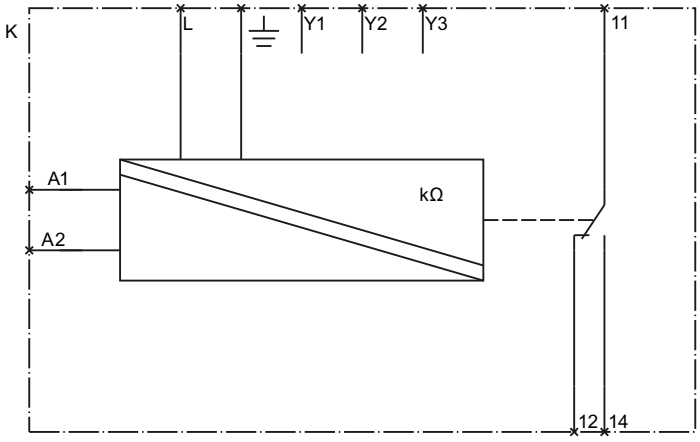

Wiring examples 3UG4581 insulation monitoring relays

Measuring input L can be connected to any conductor (phase or N conductor). The rated system voltage must be $U_n \leq 400$ V AC (50 to 60 Hz).

2-wire AC system

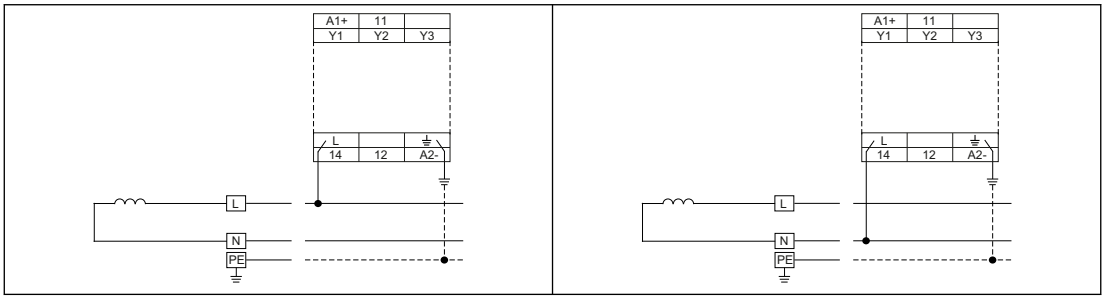

3-wire AC system

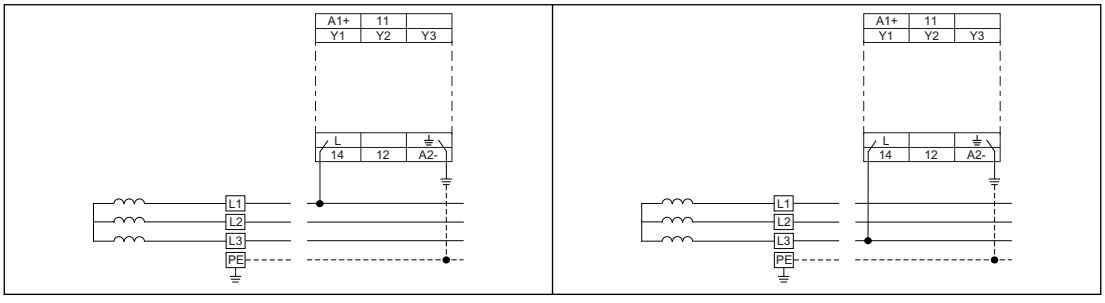

4-wire AC system

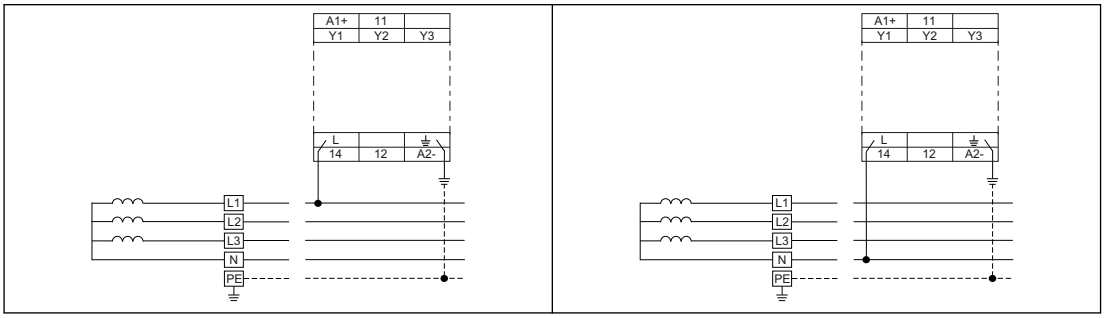

Application examples

The figure below shows monitoring for ground fault/insulation fault in the case of an ungrounded 2-wire IT AC system. The voltage source is the secondary side of an isolating transformer that galvanically isolates the system and the downstream circuit.

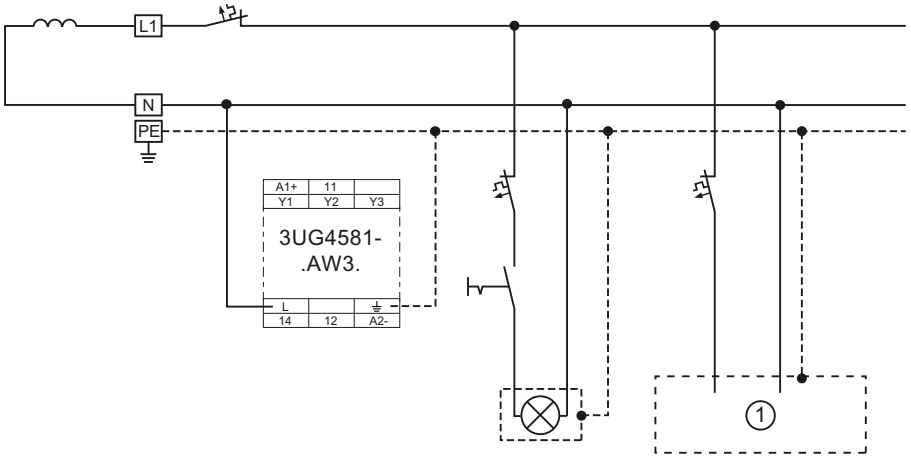

① Loads

Figure 9-2 Monitoring for ground fault/insulation fault in the case of an ungrounded 2-wire IT AC system

Note

The maximum cable length of the control cables is 50 m or 100 pF/m.

The figure below shows monitoring for ground fault/insulation fault in the case of an ungrounded 4-wire IT AC system. The voltage source is the secondary side of an isolating transformer that galvanically isolates the system and the downstream circuit.

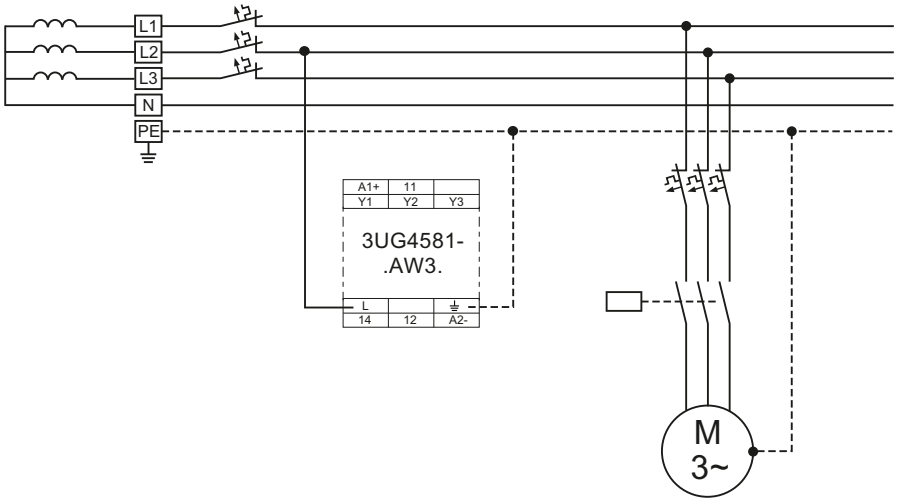

Figure 9-3 Monitoring for ground fault/insulation fault in the case of an ungrounded 4-wire IT AC system

Note

The maximum cable length of the control cables is 50 m or 100 pF/m.

9.3.6 Characteristics

Characteristic curves of the 3UG4581 insulation monitoring relays

The characteristics below show the load limit curves of the 3UG4581 insulation monitoring relays.

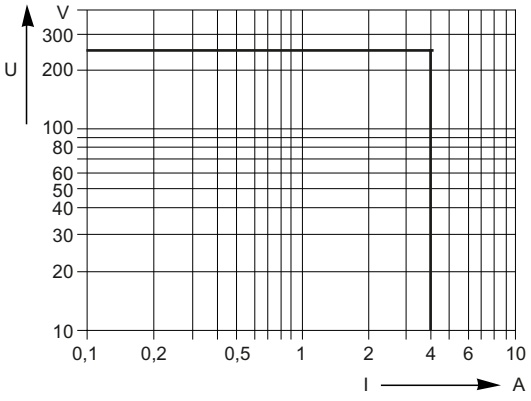

Figure 9-4 AC load (resistive)

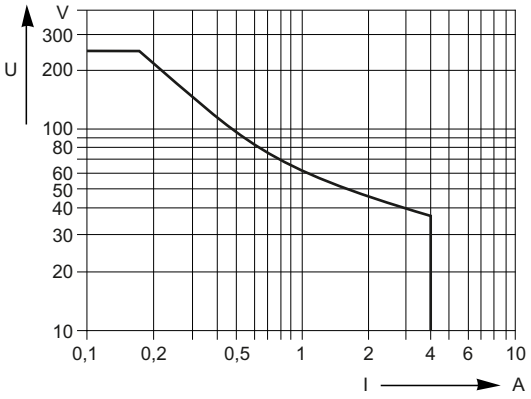

Figure 9-5 DC load (resistive)

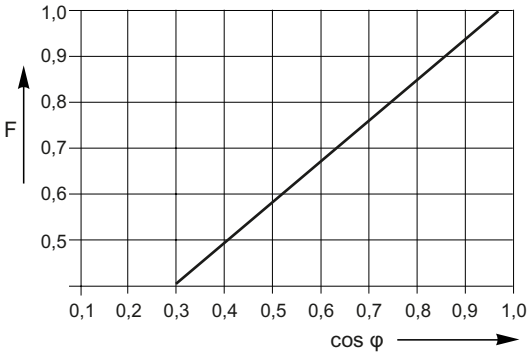

Figure 9-6 Reduction factor F in the case of inductive AC load

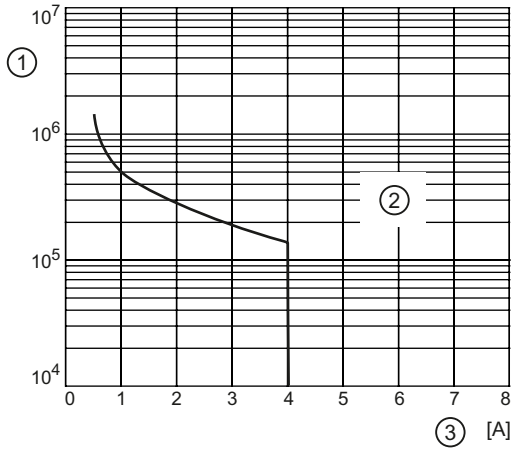

① Operating cycles
② 250 V, resistive load
③ Switching current

Figure 9-7 Contact service life

9.3.7 Technical data

Technical data sheet

You can also find the technical data of the product at Siemens Industry Online Support (https://support.industry.siemens.com/cs/ww/en/ps/16367/td).

1. Enter the full article number of the desired device in the "Product" field, and confirm with the Enter key.
2. Click the "Technical data" link.

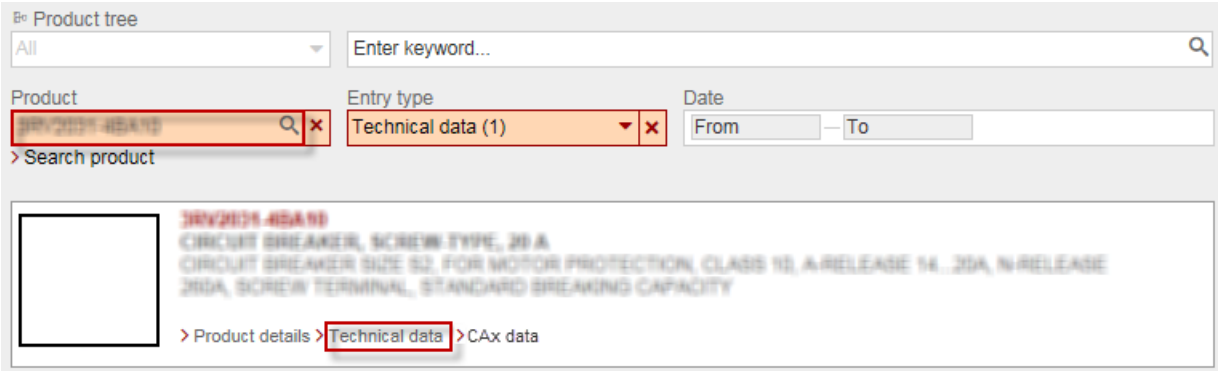

9.4 3UG4582/3UG4583 insulation monitoring relays

9.4.1 Operator controls and connection terminals

Front view/terminal labeling 3UG4582-1AW30

Front view	Description	
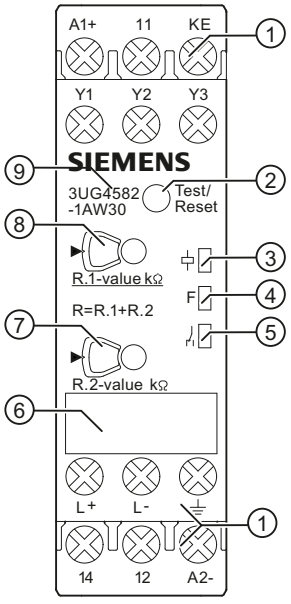	**Position digits**	
	①	Terminal block: Screw-type connections are possible.
	②	Test/RESET button
	③	Status display: LED for device status (green)
	④	Status display: LED for monitoring status F (red)
	⑤	Status display: LED output contact status (yellow)
	⑥	Label
	⑦	Rotary knob for adjusting the insulation resistance (R.2 for the units position of R)
	⑧	Rotary knob for adjusting the insulation resistance (R.1 for the tens position of R) Setting value "0" is colored yellow.[1)]
	⑨	Device article number
	Terminal labels	
	A1+	Rated control supply voltage ~ / +
	A2-	Rated control supply voltage ~ / -
	Y1	Control inputs; isolation control
	Y2	Y1-Y3: Remote test
	Y3	Y2-Y3: Remote reset/autoreset
	L+	Measuring signal input, connection to phase or L+
	L-	Measuring signal input, connection to phase, N conductor or L-
	KE	Measuring signal input, control ground connection for open-circuit monitoring
	⏚	Measured signal input, grounding connection
	12	Output relay K1 CO contact NC contact
	11	Output relay K1 CO contact root
	14	Output relay K1 CO contact NO contact

[1)] Information on setting accuracy

- at setting value "0", a setting accuracy of >15 % applies for R
- at setting value ">1", a setting accuracy of 8 % applies for R

You can find additional information on the connection terminals and the permissible conductor cross-sections in the Chapter "Technical data (Page 190)".

You can find information on connecting in the Chapter "Circuit diagrams (Page 181)".

Front view/terminal labeling 3UG4582-1AW31

Front view	Description	
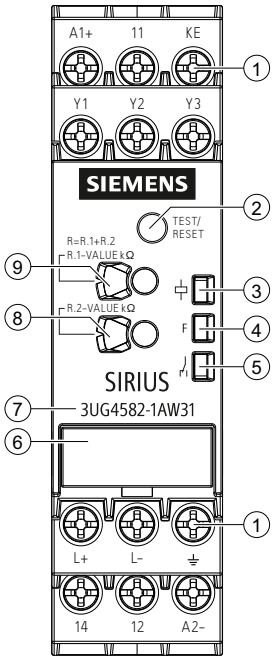	**Position digits**	
	①	Terminal block: Screw-type connections are possible.
	②	Test/RESET button
	③	Status display: LED for device status (green)
	④	Status display: LED for monitoring status F (red)
	⑤	Status display: LED output contact status (yellow)
	⑥	Label
	⑦	Device article number
	⑧	Rotary knob for adjusting the insulation resistance (R.2 for the units position of R)
	⑨	Rotary knob for adjusting the insulation resistance (R.1 for the tens position of R)Setting value "0" is colored yellow.[1)]
	Terminal labels	
	A1+	Rated control supply voltage ~ / +
	A2-	Rated control supply voltage ~ / -
	Y1	Control inputs; isolation control
	Y2	Y1-Y3: Remote test
	Y3	Y2-Y3: Remote reset/autoreset
	L+	Measuring signal input, connection to phase or L+
	L-	Measuring signal input, connection to phase, N conductor or L-
	KE	Measuring signal input, control ground connection for open-circuit monitoring
	⏚	Measured signal input, grounding connection
	12	Output relay K1 CO contact NC contact
	11	Output relay K1 CO contact root
	14	Output relay K1 CO contact NO contact

[1)] Information on setting accuracy

- at setting value "0", a setting accuracy of >15 % applies for R
- at setting value ">1", a setting accuracy of 8 % applies for R

You can find additional information on the connection terminals and the permissible conductor cross-sections in the Chapter "Technical data (Page 190)".

You can find information on connecting in the Chapter "Circuit diagrams (Page 181)".

Front view/terminal labeling 3UG4582-2AW31

Front view	Description	
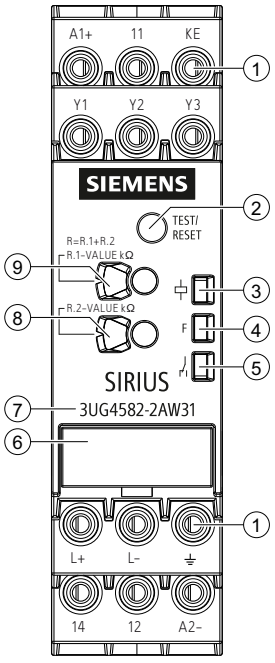	**Position digits**	
	①	Terminal block: Supports spring-loaded connection technology.
	②	Test/RESET button
	③	Status display: LED for device status (green)
	④	Status display: LED for monitoring status F (red)
	⑤	Status display: LED output contact status (yellow)
	⑥	Label
	⑦	Device article number
	⑧	Rotary knob for adjusting the insulation resistance (R.2 for the units position of R)
	⑨	Rotary knob for adjusting the insulation resistance (R.1 for the tens position of R)Setting value "0" is colored yellow.[1)]
	Terminal labels	
	A1+	Rated control supply voltage ~ / +
	A2-	Rated control supply voltage ~ / -
	Y1	Control inputs; isolation control
	Y2	Y1-Y3: Remote test
	Y3	Y2-Y3: Remote reset/autoreset
	L+	Measuring signal input, connection to phase or L+
	L-	Measuring signal input, connection to phase, N conductor or L-
	KE	Measuring signal input, control ground connection for open-circuit monitoring
	⏚	Measured signal input, grounding connection
	12	Output relay K1 CO contact NC contact
	11	Output relay K1 CO contact root
	14	Output relay K1 CO contact NO contact

[1)] Information on setting accuracy

- at setting value "0", a setting accuracy of >15 % applies for R
- at setting value ">1", a setting accuracy of 8 % applies for R

You can find additional information on the connection terminals and the permissible conductor cross-sections in the Chapter "Technical data (Page 190)".

You can find information on connecting in the Chapter "Circuit diagrams (Page 181)".

Front view/terminal labeling 3UG4583-1CW30

Front view	Description	
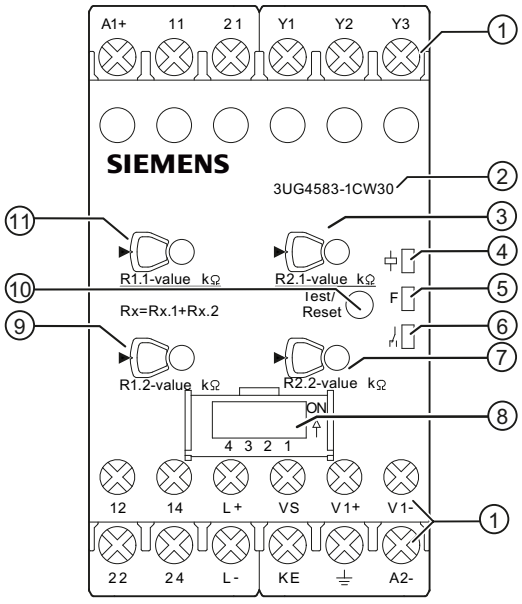	**Position digits**	
	①	Terminal block: Screw-type connections are possible.
	②	Device order number
	③	Rotary knob for adjusting the insulation resistance (R2.1 for the tens position of R2) Setting value "0" is colored yellow.[1)]
	④	Status display: LED for device status (green)
	⑤	Status display: LED for monitoring status F (red)
	⑥	Status display: LED output contact status (yellow)
	⑦	Rotary knob for adjusting the insulation resistance (R2.2 for the units position of R2)
	⑧	Label
	⑨	Rotary knob for adjusting the insulation resistance (R1.2 for the units position of R1)
	⑩	Test/RESET button
	⑪	Rotary knob for adjusting the insulation resistance (R1.1 for the tens position of R1) Setting value "0" is colored yellow.[1)]
	Terminal labels	
	A1+	Rated control supply voltage ~ / +
	A2-	Rated control supply voltage ~ / -
	Y1	Control inputs; isolation control
	Y2	Y1-Y3: Remote test
	Y3	Y2-Y3: Remote reset/autoreset
	VS	Connection terminals for the voltage reducer module
	V1+	
	V1-	
	L+	Measuring signal input, connection to phase or L+
	L-	Measuring signal input, connection to phase, N conductor or L-
	KE	Measuring signal input, control ground connection for open-circuit monitoring
	⏚	Measured signal input, grounding connection
	12	Output relay K1 CO contact NC contact
	11	Output relay K1 CO contact root
	14	Output relay K1 CO contact NO contact
	22	Output relay K2 CO contact NC contact
	21	Output relay K2 CO contact root
	24	Output relay K2 CO contact NO contact

[1)] Information on setting accuracy

- at setting value "0", a setting accuracy of >15 % applies for R
- at setting value ">1", a setting accuracy of 6 % applies for R

You can find additional information on the connection terminals and the permissible conductor cross-sections in the Chapter "Technical data (Page 190)".

You can find information on connecting in the Chapter "Circuit diagrams (Page 181)".

Front view/terminal labeling 3UG4583-1CW31

Front view	Description	
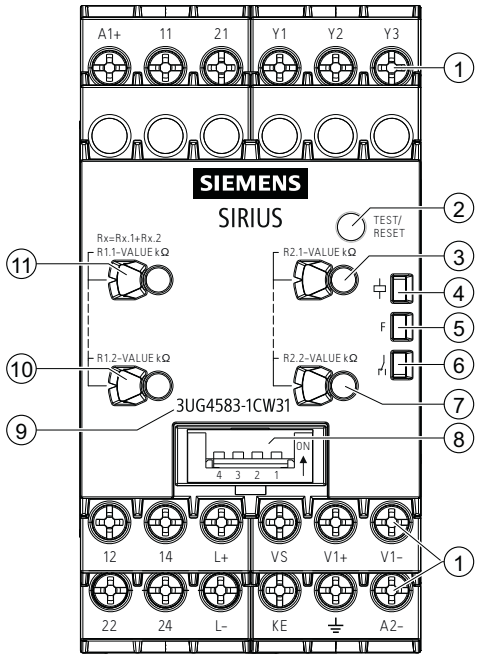	**Position digits**	
	①	Terminal block: Screw-type connections are possible.
	②	Test/RESET button
	③	Rotary knob for adjusting the insulation resistance (R2.1 for the tens position of R2) Setting value "0" is colored yellow.[1)]
	④	Status display: LED for device status (green)
	⑤	Status display: LED for monitoring status F (red)
	⑥	Status display: LED output contact status (yellow)
	⑦	Rotary knob for adjusting the insulation resistance (R2.2 for the units position of R2)
	⑧	Label
	⑨	Device order number
	⑩	Rotary knob for adjusting the insulation resistance (R1.2 for the units position of R1)
	⑪	Rotary knob for adjusting the insulation resistance (R1.1 for the tens position of R1) Setting value "0" is colored yellow.[1)]
	Terminal labels	
	A1+	Rated control supply voltage ~ / +
	A2-	Rated control supply voltage ~ / -
	Y1	Control inputs; isolation control
	Y2	Y1-Y3: Remote test
	Y3	Y2-Y3: Remote reset/autoreset
	VS	Connection terminals for the voltage reducer module
	V1+	
	V1-	
	L+	Measuring signal input, connection to phase or L+
	L-	Measuring signal input, connection to phase, N conductor or L-
	KE	Measuring signal input, control ground connection for open-circuit monitoring
	⏚	Measured signal input, grounding connection
	12	Output relay K1 CO contact NC contact
	11	Output relay K1 CO contact root
	14	Output relay K1 CO contact NO contact
	22	Output relay K2 CO contact NC contact
	21	Output relay K2 CO contact root
	24	Output relay K2 CO contact NO contact

[1)] Information on setting accuracy

- at setting value "0", a setting accuracy of >15 % applies for R
- at setting value ">1", a setting accuracy of 6 % applies for R

You can find additional information on the connection terminals and the permissible conductor cross-sections in the Chapter "Technical data (Page 190)".

You can find information on connecting in the Chapter "Circuit diagrams (Page 181)".

Front view/terminal labeling 3UG4583-2CW31

Front view	Description	
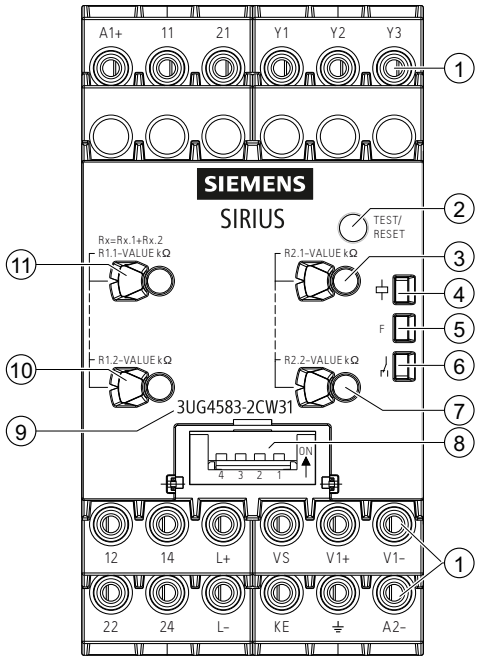	**Position digits**	
	①	Terminal block: Supports spring-loaded connection technology.
	②	Test/RESET button
	③	Rotary knob for adjusting the insulation resistance (R2.1 for the tens position of R2) Setting value "0" is colored yellow.[1)]
	④	Status display: LED for device status (green)
	⑤	Status display: LED for monitoring status F (red)
	⑥	Status display: LED output contact status (yellow)
	⑦	Rotary knob for adjusting the insulation resistance (R2.2 for the units position of R2)
	⑧	Label
	⑨	Device order number
	⑩	Rotary knob for adjusting the insulation resistance (R1.2 for the units position of R1)
	⑪	Rotary knob for adjusting the insulation resistance (R1.1 for the tens position of R1) Setting value "0" is colored yellow.[1)]
	Terminal labels	
	A1+	Rated control supply voltage ~ / +
	A2-	Rated control supply voltage ~ / -
	Y1	Control inputs; isolation control
	Y2	Y1-Y3: Remote test
	Y3	Y2-Y3: Remote reset/autoreset
	VS	Connection terminals for the voltage reducer module
	V1+	
	V1-	
	L+	Measuring signal input, connection to phase or L+
	L-	Measuring signal input, connection to phase, N conductor or L-
	KE	Measuring signal input, control ground connection for open-circuit monitoring
	⏚	Measured signal input, grounding connection
	12	Output relay K1 CO contact NC contact
	11	Output relay K1 CO contact root
	14	Output relay K1 CO contact NO contact
	22	Output relay K2 CO contact NC contact
	21	Output relay K2 CO contact root
	24	Output relay K2 CO contact NO contact

[1] Information on setting accuracy

- at setting value "0", a setting accuracy of >15 % applies for R
- at setting value ">1", a setting accuracy of 6 % applies for R

You can find additional information on the connection terminals and the permissible conductor cross-sections in the Chapter "Technical data (Page 190)".

You can find information on connecting in the Chapter "Circuit diagrams (Page 181)".

9.4.2 Functions

General functionality

The 3UG4582/3UG4583 insulation monitoring relays are supplied with a rated control and supply voltage of 24 V to 240 V AC/DC, and they monitor the insulation resistance in accordance with IEC 61557-8 in ungrounded IT-AC systems, IT-AC systems with galvanically connected DC circuits, or IT-DC systems.

The devices can monitor control circuits (1-phase) and main circuits (3-phase). For this purpose, the insulation resistance between power supply cords (terminal: L+ and L-) and the ground of the system (terminal ⏚ and KE) is measured. Systems with rated system voltages U_n = 0 to 250 V AC (15 to 400 Hz) / U_n = 0 to 300 V DC (3UG4582) or U_n = 0 to 400 V AC (15 to 400 Hz) / U_n = 0 to 600 V DC (3UG4583) can be connected direct to the measuring inputs, and their insulation resistance can be monitored.

The insulation monitoring relays have two rotary buttons (3UG4582)/four rotary buttons (3UG4583) for adjusting the insulation resistance R and a Test/RESET button, to perform an internal test on the device or to reset the device.

If the measured value drops below the set threshold, the output relays are set to fault status.

For systems with voltages over 400 V AC and 600 V DC, the 3UG4583 insulation monitoring relays with 3UG4983 voltage reducer module can be used for extending the voltage range.

You will find the adjustment ranges and factory settings of the available parameters in Chapter "Operator control (Page 177)".

You will find a description of the individual parameters in the Chapter "Parameters (Page 265)".

Measuring method

The 3UG4582/3UG4583 insulation monitoring relays use a new predictive measuring method for high-speed measurements and fast pick-up times. The devices can be configured to the relevant application conditions and are therefore versatile in use.

A pulsing measuring signal is fed into the system to be monitored and the insulation resistance is calculated from this.
The received signal is different in form to the injected measuring signal. This change depends on the insulation resistance and the system discharge capacity. The change to the insulation resistance is predicted from this deviating form. If the predicted insulation resistance

corresponds to the insulation resistance calculated in the next measuring cycle and is lower than the set threshold, output relay K1 responds depending on the device configuration.
This adaptive measuring principle is suitable for detecting symmetrical insulation faults.

Monitoring

The system to be monitored is connected to the measuring signal inputs L+, L-. The terminals can be connected to any conductor (phase, +/- potential, or N conductor). The measuring signal inputs must be connected to different conductors.

The ground potential is connected to the terminals ⏚ and KE.
KE stands for control ground and is used for monitoring the fault-free ground connection of the insulation monitoring relay.

The 3UG4582 insulation monitoring relays work according to the closed-circuit principle NC. The 3UG4583 insulation monitoring relays work in accordance with the set relay switching behavior (closed-circuit principle NC or open-circuit principle NO).

After applying the rated control supply voltage, the insulation monitoring relay goes through an internal test that checks the proper functioning of the operational device. The test encompasses an internal test of the device at hardware and firmware level (on the 3UG4583, a settings check is also carried out) , as well as system diagnostics with calculation of the system discharge capacity of the first measured value of the insulation resistance. If there are no internal device faults or external faults on completion of this test, the output relays change their switching state (if closed-circuit principle is set). The time for this test can be 10 s - 15 s with purely AC systems. The circuit is opened instantaneously after detection of a fault. In AC systems with DC components, as is the case when rectifiers are used, up to 15 s can be needed.

Note

If the 3UG4583 insulation monitoring relay is used for monitoring the winding insulation of a motor, the function test first results in a fault message if the closed-circuit principle is selected, since the device is not applied to the supply voltage until a measurement is possible on the switched-off motor. Either this fault must be hidden by downstream logic, or the open-circuit principle must be set. The output relays would only pick up if an insulation fault or internal device faults are detected. However, the fault "Missing supply voltage" can then no longer be detected.

If the measured value undershoots the set threshold in the case of the 3UG4582 insulation monitoring relays, output relay K1 drops out. If the measured value overshoots the threshold including hysteresis, output relay K1 picks up.

The principle of operation of the 3UG4583 insulation monitoring relays can be configured via DIP switch 4:

In the functional principle **1 x 2 changeover contacts**, both output relays K1 and K2 respond to threshold R1 (warning). The settings of threshold R2 have no influence on the principle of operation. If the measured value undershoots the set threshold, the output relays switch to the fault status. If the measured value overshoots the set threshold including hysteresis, the output relays revert to the original state.

In the functional principle **2 x 1 changeover contacts**, output relay K1 responds to threshold R1 (shutdown) and output relay K2 responds to threshold R2 (warning). If the measured value undershoots the set threshold R2 (warning), output relay K2 switches. If the measured value

undershoots the set threshold R1 (shutdown), output relay K1 switches. If the measured value overshoots the set threshold R1 (shutdown) including hysteresis, output relay K1 reverts to the original state. If the measured value overshoots the set threshold R2 (warning) including hysteresis, output relay K2 reverts to the original state.

All operating states of the 3UG4582/3UG4583 insulation monitoring relays are displayed via three LEDs.

Additional monitoring functions

The 3UG4582/3UG4583 insulation monitoring relays also have two further functions.

The devices monitor the terminals ⏚ and KE cyclically for **open circuit**. If an open circuit is detected on one of the connected conductors, output relay K1 switches to the fault state (on the 3UG4583, both output relays K1 and K2). The 3UG4583 also has an open-circuit detection function that can be shut down and automatically tests the measuring signal inputs L+ and L- at system start. This open-circuit test can be repeated at any time during operation by activating the test function (Test/RESET button). On the 3UG4583, open-circuit detection can be switched on (ON) and off (OFF) using DIP switch 3.

The 3UG4582/3UG4583 insulation monitoring relays monitor the ungrounded AC system, DC system, or AC/DC system for impermissibly high **system discharge capacity**. If the system discharge capacity is too high, output relay K1 switches to the fault state (on the 3UG4583, both output relays K1 and K2 switch to the fault state). If incorrect settings that could result in a malfunction are made on the 3UG4583, the output relays switch to the fault state. If, for example, an insulation warning value is set that is lower than the selected shutdown threshold, this results in a parameterization error.

You will find the switching states of the output relays below in the Section "Function diagrams (Page 171)" and in the Chapter "Diagnostics (Page 180)".

You will find the adjustment ranges and factory settings of the available parameters and the definitions of the DIP switch positions in Chapter "Operator control (Page 177)".

Reset response and memory function

The device features an autoreset that resets output relay K1 to its original state after an fault message and rectification of the fault that has occurred. As well as autoreset, the devices can also be set to manual RESET by means of external switching.

The output relay (on 3UG4583: both output relays) remains dropped out if manual RESET is active, and it only picks up again after actuation of the combined test/reset button, or following activation of remote reset (terminals Y2-Y3) if the insulation resistance is greater than the set threshold including hysteresis. Another method of resetting the device is by switching the

supply voltage off and on again, provided the fault is not stored in retentive (non-volatile) memory.

Connection Y2-Y3	Reset options
	1) On the front (Test/Reset button) 2) Remote reset (remote button with NC function) 3) A1+ / A2- (switching the supply voltage off/on)
	1) On the front (Test/Reset button) 2) A1+ / A2- (switching the supply voltage off/on)
	1) Autoreset (factory setting)

Non-volatile memory function on the 3UG4583

The 3UG4583 insulation monitoring relays also have a configurable non-volatile (retentive) fault storage function. After shutting down and restoring the rated control and supply voltage, the device is in the state it was in prior to shutdown, until it is reset.

If fault storage is activated using DIP switch 2 (ON), output relays K1 and K2 remain in the fault state and do not switch back to their original position until actuation of the combined Test/Reset button, or until activation of the remote reset (jumpering of terminals Y2/Y3) if the measured insulation resistance is greater than the set threshold(s) including hysteresis. Fault storage is non-volatile.

The table below shows the different options for resetting the device depending on the setting of DIP switch 2.

DIP switch 2	OFF	ON
	1) On the front (Test/Reset button) 2) Remote reset (remote button with NC function) 3) A1+ / A2- (switching the supply voltage off/on)	1) On the front (Test/Reset button) 2) Remote reset (remote button with NC function)
	1) On the front (Test/Reset button) 2) A1+ / A2- (switching the supply voltage off/on)	1) On the front (Test/Reset button)
	1) Autoreset (factory setting)	— [1]

[1] If there is no external connection between terminals Y2 and Y3 while retentive fault storage is set, internal device monitoring detects a parameterization error.

You will find the adjustment ranges and factory settings of the available parameters and the definitions of the DIP switch positions in Chapter "Operator control (Page 177)".

3UG4983-.A voltage reducer module for extending the voltage range

The 3UG4983-.A voltage reducer module can be used to extend the measuring range of the rated line voltage U_n to be monitored. The voltage reducer module is used to connect the 3UG4583 insulation monitoring relay to systems with up to 690 V AC and 1000 V DC. The voltage reducer module is connected to terminals VS, V1+ and V1- of the insulation monitoring relay.

These accessories are described in Chapter "3UG4983 voltage reducer module for the 3UG4583-1CW30 monitoring relay (Page 252)".

9.4.2.1 Function diagrams

3UG4582 function diagrams

Relay switching behavior = NC
(closed-circuit principle)

Without fault storage, autoreset

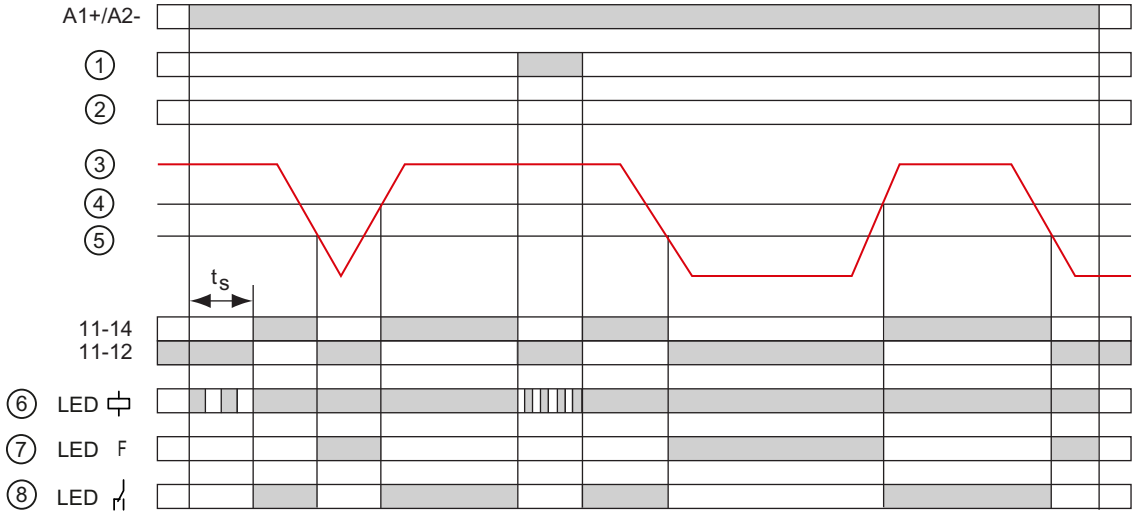

1 Test (Y1-Y3)
2 Reset (Y2-Y3)
3 Measured value
4 Hysteresis
5 Threshold
6 Green
7 Red
8 Yellow

t_S = Time for internal device test after applying the supply voltage

Relay switching behavior = NC
(closed-circuit principle)

With fault storage, manual RESET

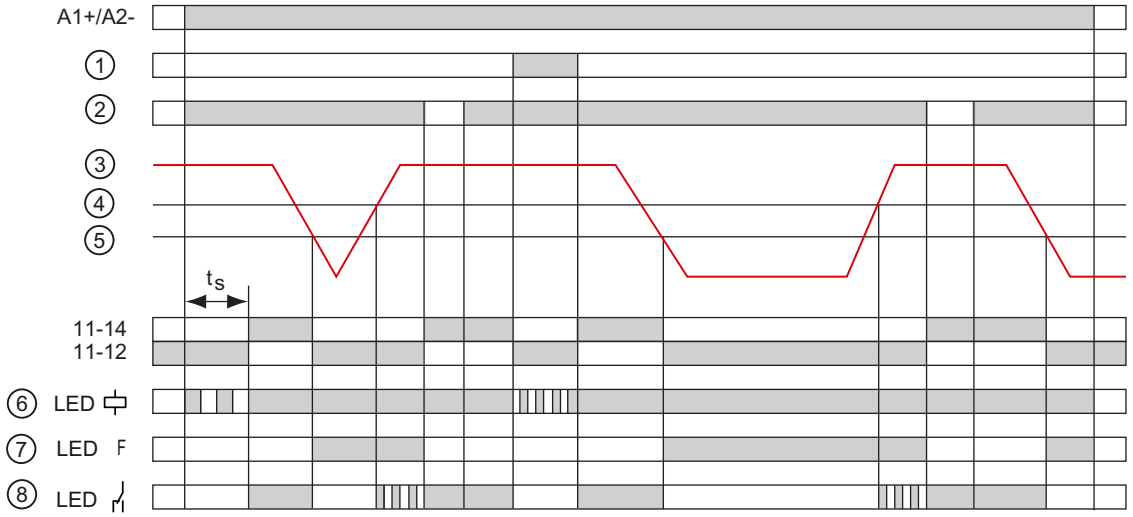

① Test (Y1-Y3)
② Reset (Y2-Y3)
③ Measured value
④ Hysteresis
⑤ Threshold
⑥ Green
⑦ Red
⑧ Yellow

t_s = Time for internal device test after applying the supply voltage

3UG4583 function diagrams

Relay switching behavior = NC(closed-circuit principle)	With fault storage, manual RESET, 1 x 2 changeover contacts, shut-down

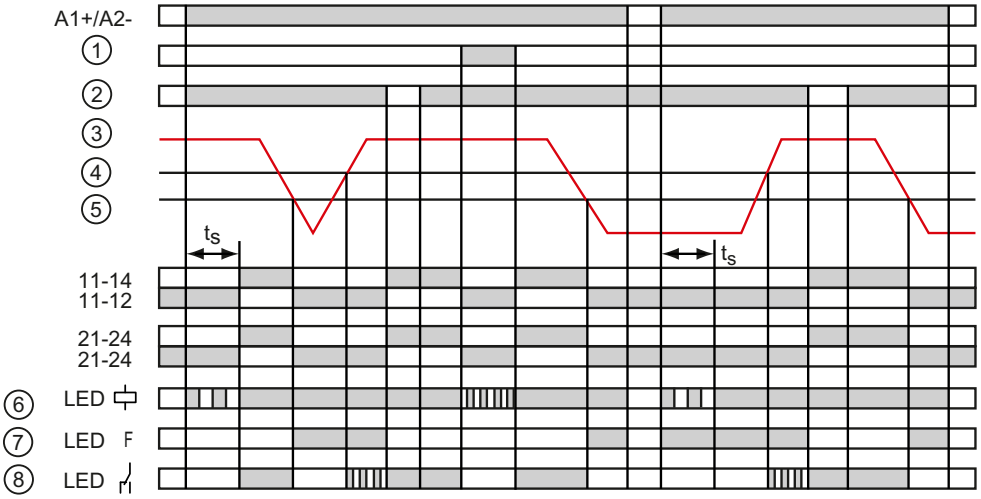

1 Test (Y1-Y3)
2 Reset (Y2-Y3)
3 Measured value
4 Hysteresis
5 Threshold
6 Green
7 Red
8 Yellow

t_S = Time for internal device test after applying the supply voltage

Relay switching behavior = NO (open-circuit principle)	**With fault storage, manual RESET, 1 x 2 changeover contacts, shut-down**

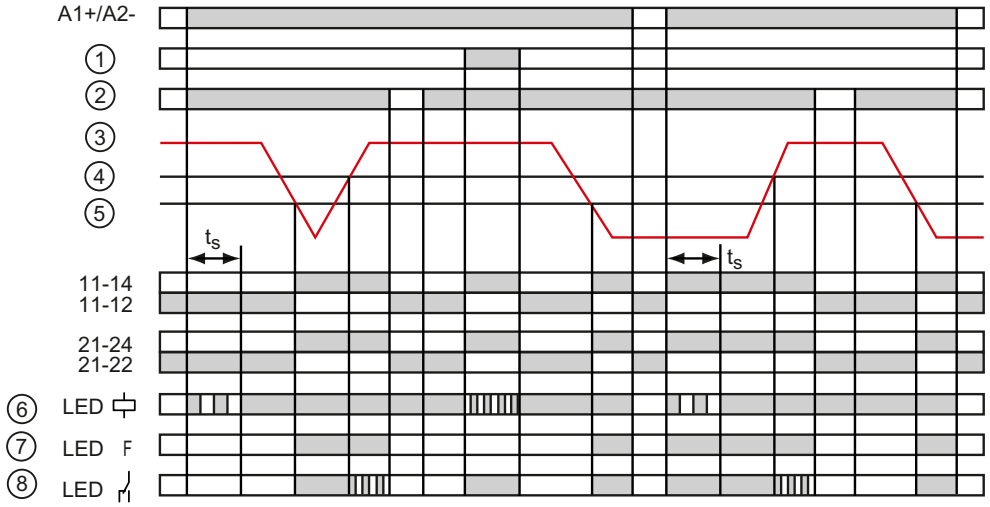

① Test (Y1-Y3)
② Reset (Y2-Y3)
③ Measured value
④ Hysteresis
⑤ Threshold
⑥ Green
⑦ Red
⑧ Yellow

t_s = Time for internal device test after applying the supply voltage

Relay switching behavior = NC(closed-circuit principle)	With fault storage, manual RESET, 2 x 1 changeover contacts, warning and shutdown

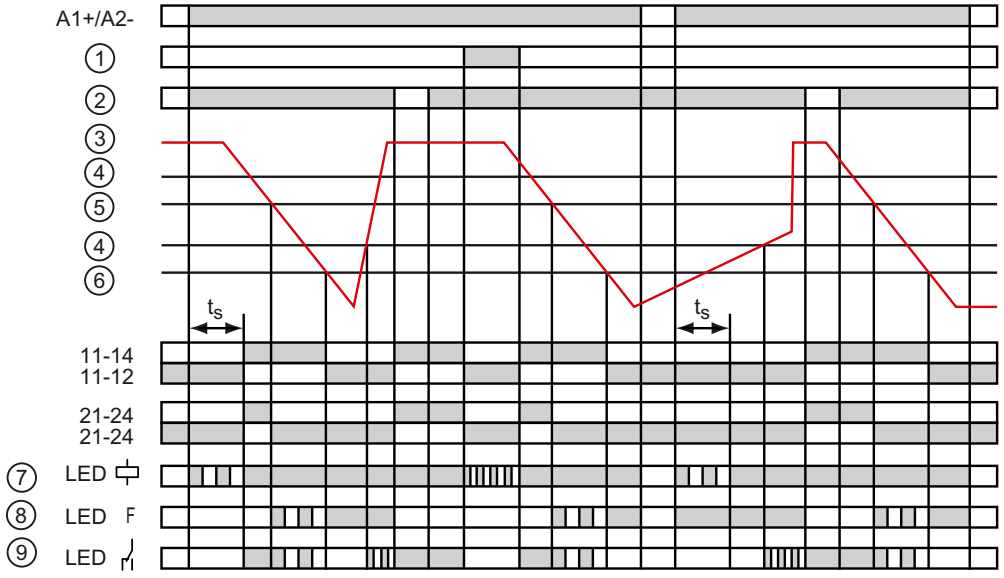

1 Test (Y1-Y3)
2 Reset (Y2-Y3)
3 Measured value
4 Hysteresis
5 Warning
6 Shutdown
7 Green
8 Red
9 Yellow

t_s = Time for internal device test after applying the supply voltage

Relay switching behavior = NO (open-circuit principle)	**With fault storage, manual RESET, 2 x 1 changeover contacts, warning and shutdown**

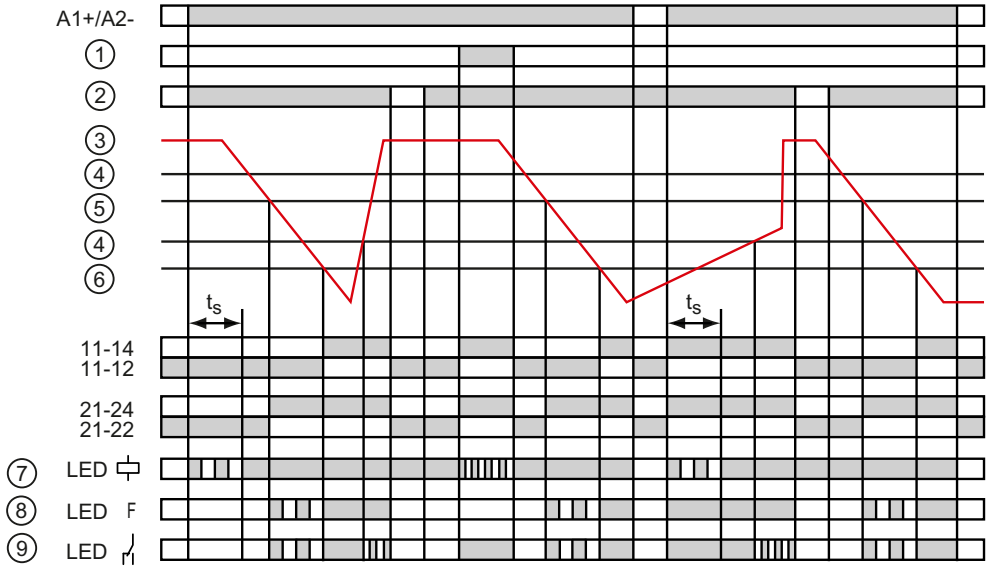

1 Test (Y1-Y3)
2 Reset (Y2-Y3)
3 Measured value
4 Hysteresis
5 Warning
6 Shutdown
7 Green
8 Red
9 Yellow

t_s = Time for internal device test after applying the supply voltage

9.4.3 Operator control

Parameters

The following parameters can be set on the two (3UG4582) or four (3UG4583) ten-level rotary buttons (absolute scale) with the help of a screwdriver:

Table 9-5 Parameter information, 3UG4582/3UG4583 insulation monitoring relays

Parameters	Control elements [1]	Setting range		Increment
		Minimum value	Maximum value	
Threshold for undershoot (R.1-value)[2]	8	0 kΩ	90 kΩ	10 kΩ increments
Threshold for undershoot (R.2-value)[3]	7	1 kΩ	10 kΩ	1 kΩ increments
Threshold for undershoot (R1.1-value)[4]	11	0 kΩ	90 kΩ	10 kΩ increments
Threshold for undershoot (R1.2-value)[5]	9	1 kΩ	10 kΩ	1 kΩ increments
Threshold for undershoot (R2.1-value)[6]	3	0 kΩ	90 kΩ	10 kΩ increments
Threshold for undershoot (R2.2-value)[7]	7	1 kΩ	10 kΩ	1 kΩ increments
Test / Reset	2 (3UG4582) 10 (3UG4583)	Deactivated	Activated	--

[1] The position digits refer to the front view of the respective 3UG4582 / 3UG4583 devices in Chapter "Operator controls and connection terminals (Page 159)".

[2] 3UG4582: By operating the rotary button, the tens position of the threshold for undershoot (R.1) can be selected.

[3] 3UG4582: By operating the rotary button, the units position of the threshold for undershoot (R.2) can be selected

[4] 3UG4583: By operating the rotary button, the tens position of the threshold for undershoot (R1.1) can be selected.

[5] 3UG4583: By operating the rotary button, the units position of the threshold for undershoot (R1.2) can be selected

[6] 3UG4583: By operating the rotary button, the tens position of the threshold for undershoot (R2.1) can be selected.

[7] 3UG4583: By operating the rotary button, the units position of the threshold for the insulation resistance R2.2 can be selected

The threshold is derived from the sum of the two set values. If, for example, threshold R.1-value is set to 70 and threshold R.2-value is set to 8 on the 3UG4582, threshold R corresponds to 78 kΩ.

DIP switch

The DIP switches are located behind the label on the front of the 3UG4583 insulation monitoring relays. Four settings can be parameterized with the DIP switch.

The tables below contain the setting options on the device and the explanations for the relevant switch positions. When the device is delivered, the switch is in the position OFF.

Table 9-6 DIP switch - 3UG4583

Position	**4** **Functional principle**	**3** **Open-circuit detection**	**2** **Non-volatile (retentive) fault storage**	**1** **Functional principle of output relays K1 and K2**
ON ↑	2 x 1 changeover contacts	Activated	Activated	Closed-circuit principle NC
OFF	1 x 2 changeover contacts	Deactivated	Deactivated	Open-circuit principle NO

Table 9-7 Definitions of the DIP switch positions - 3UG4583

DIP switch	**ON**	**OFF**
Position 4 **Functional principle 2 x 1 changeover contacts / 1 x 2 changeover contacts**	**2 x 1 changeover contacts** If functional principle 2 x 1 changeover contacts is set, output relay K1 responds to threshold R1 (shutdown) and output relay K2 responds to threshold R2 (warning).	**1 x 2 changeover contacts** If functional principle 1 x 2 changeover contacts is set, both output relays K1 and K2 respond to threshold R1 (warning). The settings of threshold R2 have no influence on the principle of operation.
Position 3 **Open-circuit detection**	**Open-circuit detection activated** If open-circuit monitoring is activated, the insulation monitoring relay monitors cables connected to terminals L+, L-, ⏚ and KE for interruption.	**Open-circuit detection deactivated** This setting deactivates open-circuit detection.

DIP switch	ON	OFF
Position 2 **Non-volatile (retentive) fault storage**	**Non-volatile fault storage activated** If retentive fault storage is activated, output relays K1 and K2 remain in the fault state even after a failure or active shutdown of the supply voltage, until the device is reset using the Test/Reset button or a remote reset is carried out (jumpering of terminals Y2 / Y3).	**Non-volatile fault storage deactivated** If the function is deactivated, output relays K1 and K2 switch back to the good state following failure or active shutdown of the supply voltage if there is no longer an insulation fault after the supply voltage has been restored. A remote reset can also be carried out by switching the supply voltage. However, a voltage failure results in the loss of a saved warning message or alarm message.
Position 1 **Functional principle of output relays K1 and K2**	**Closed-circuit principle NC** Output relays K1 and K2 pick up after application of the supply voltage and successful self-test and system diagnostics. If a fault occurs, the output relays drop out. As long as there is no fault, the output relays remain in the active state.	**Open-circuit principle NO** If a fault occurs, output relays K1 and K2 pick up. As long as there is no fault, the output relays remain in the dropped-out state.

Chapter "Wiring examples (Page 182)" shows the examples for the different monitoring modes.

The parameters are defined in the Chapter "Parameters (Page 265)".

Tools required

The same screwdriver can be used to set the parameters as for wiring the insulation monitoring relays.

Carrying out the self-test

The test function is only possible if there is no fault.

By operating the combined test/reset button, the insulation monitoring relay goes through an internal test that checks the proper functioning of the operational device.

The output relays do not pick up or they switch to the fault status while the Test/Reset button is pressed, while control contact Y1-Y3 is closed, or while the test functions execute after application of the supply voltage. The test function can be started again at any time via the Test/Reset button on the front or via a remote test button. The graphic below shows the connection of the button for the remote test.

Figure 9-8 Remote test button

9.4.4 Diagnostics

9.4.4.1 Diagnostics with LEDs

Status display

The following information indicates the operating state on the 3UG4582/3UG4583 insulation monitoring relays:

Operating state	LED ⏚ (green)	LED F (red)	LED ⎍ (yellow)
Startup	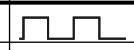	Off	Off
No fault	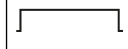	Off	• On the 3UG4582: • On the 3UG4583: Dependent on the configuration
Pre-warning[1)]	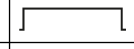	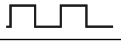	
Insulation fault (threshold undershot)	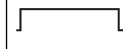		• On the 3UG4582: Off • On the 3UG4583: Dependent on the configuration
PE/KE open circuit	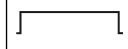		• On the 3UG4582: Off • On the 3UG4583: Dependent on the configuration
L+/L- open circuit at system start[1)] / Test function[1)]	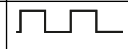 / 		Dependent on the configuration
System discharge capacity too high/measured result invalid		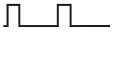	• On the 3UG4582: Off • On the 3UG4583: Dependent on the configuration
Internal fault	• On the 3UG4582: Off • On the 3UG4583: Dependent on the configuration		• On the 3UG4582: Off • On the 3UG4583: Dependent on the configuration
Setting error[1), 2)]		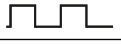	
Test function		Off	• On the 3UG4582: Off • On the 3UG4583: Dependent on the configuration
Manual RESET possible[3)]	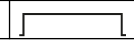	[4)]	

[1)] Only on the 3UG4583-1CW30.

[2)] Possible setting error: The threshold for shutdown is set to a higher value than the warning threshold, and non-volatile (retentive) fault storage is set simultaneously with autoreset.

[3)] The device has tripped following an insulation fault. The fault has been stored and the insulation resistance has reverted to a value above the set threshold including hysteresis.

[4)] Dependent on the fault.

The switching behavior of the output relay is shown in Chapter "Functions (Page 167)".

9.4.5 Circuit diagrams

9.4.5.1 Internal circuit diagrams

Internal circuit diagrams 3UG4582-.AW3. / 3UG4583-.CW3.

3UG4582-.AW3. insulation monitoring relay

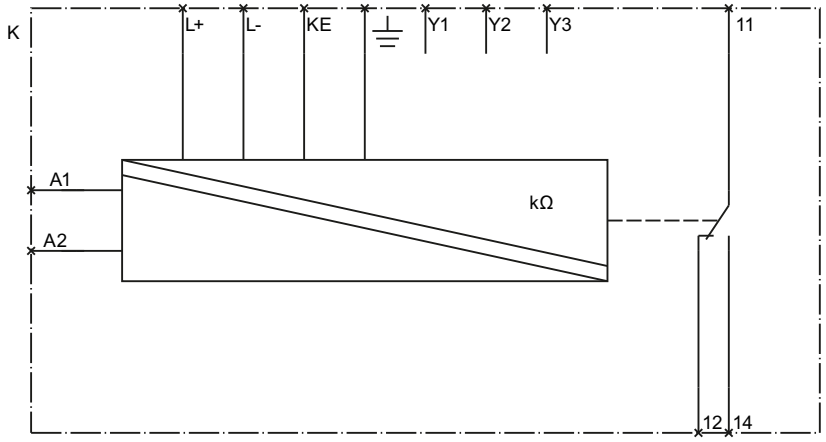

3UG4583-.CW3. insulation monitoring relay

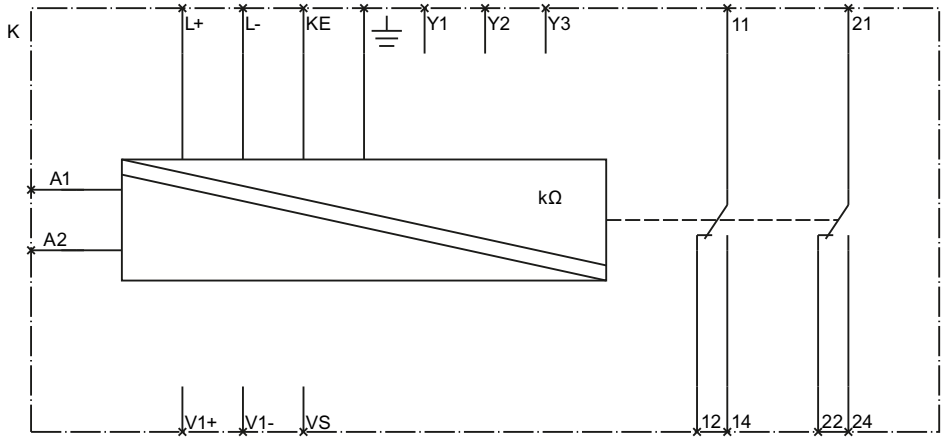

9.4.5.2 Wiring examples

Wiring examples 3UG4582 insulation monitoring relays

Measuring inputs L+ and L- can be connected to any conductor (phase or N conductor).
Measuring inputs L+ and L- must always be connected to different conductors.

The rated system voltage is $U_n \leq 250$ V AC (15 to 400 Hz) or $U_n \leq 300$ V DC.

2-wire AC system / 2-wire DC system

2-wire AC system	2-wire DC system
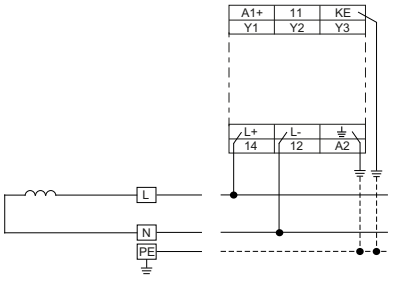	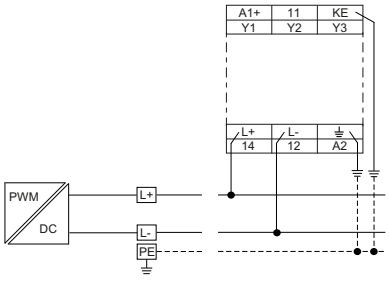

3-wire AC system/3-wire DC system

3-wire AC system	3-wire DC system
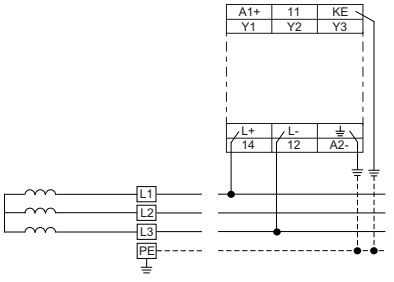	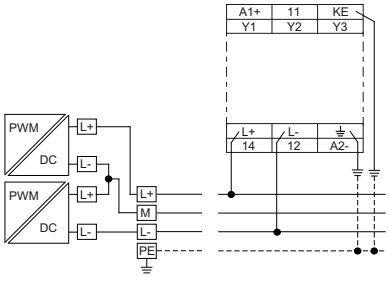

4-wire AC system

4-wire AC system	
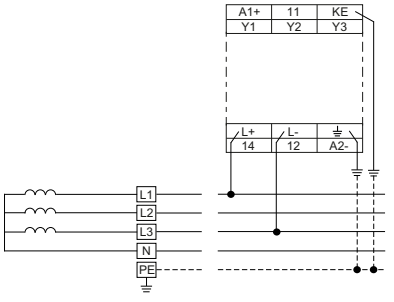	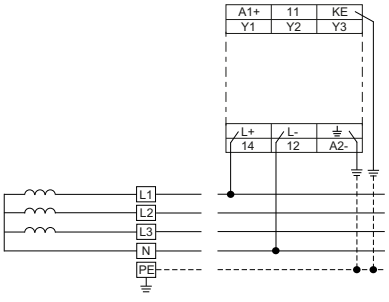

Application examples

The figure below shows monitoring for ground fault/insulation fault in the different load circuits.

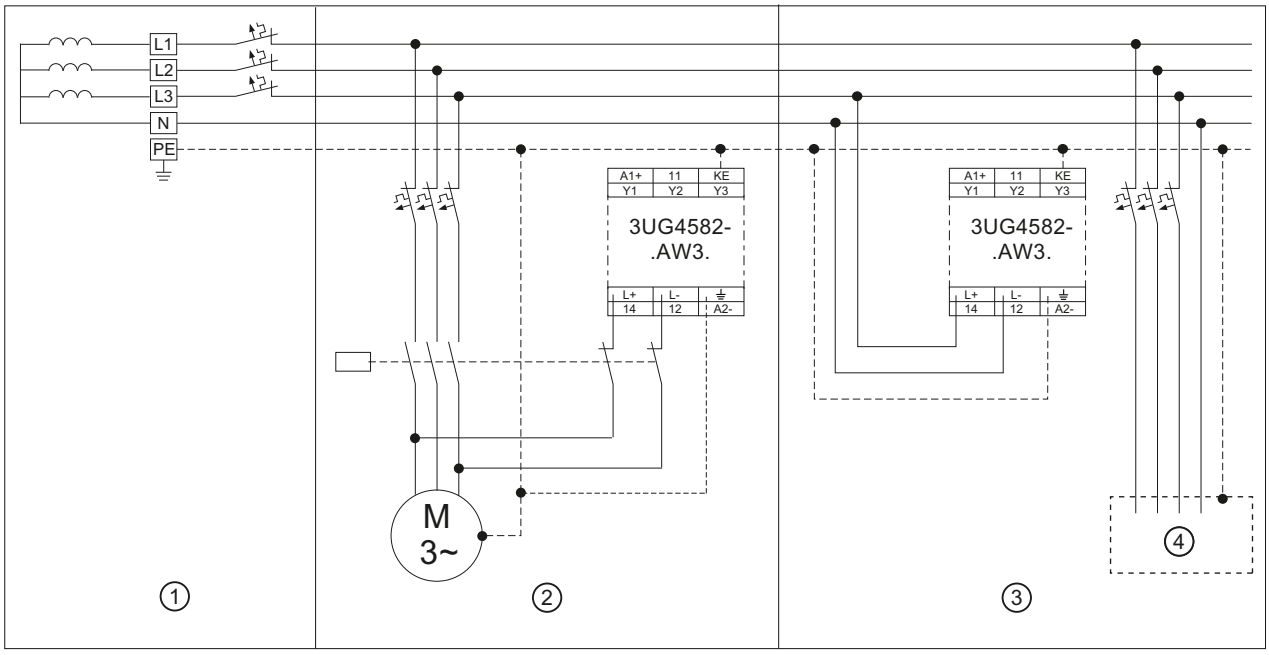

① The voltage source is the secondary side of an isolating transformer that galvanically isolates the system and the downstream circuit.

② The insulation resistance of this motor feeder is always monitored when the motor is switched off. If the motor contactor drops out, the two NC contacts connect the measuring circuit with the motor cables.

③ The 3UG4582-.AW3. insulation monitoring relay permanently monitors the insulation resistance of the remaining system with all connected loads.

④ Loads

Figure 9-9 Monitoring for ground fault/insulation fault with different load circuits

Note

The maximum cable length of the control cables is 50 m or 100 pF/m.

Wiring examples 3UG4583 insulation monitoring relays

Measuring inputs L+ and L- can be connected to any conductor (phase or N conductor). Measuring inputs L+ and L- must always be connected to different conductors.

The rated line voltage is $U_n \leq 400$ V AC (15 to 400 Hz) or $U_n \leq 600$ V DC. The 3UG4983-.A voltage reducer module must be used to monitor systems with higher voltages.

2-wire AC system / 2-wire DC system

2-wire AC system	2-wire DC system
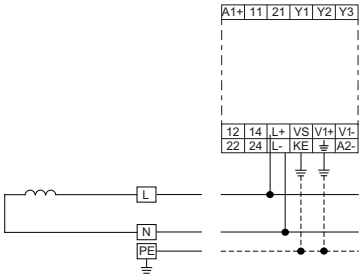	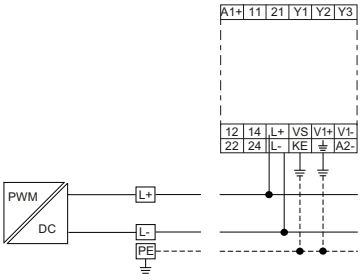

3-wire AC system/3-wire DC system

3-wire AC system	3-wire DC system
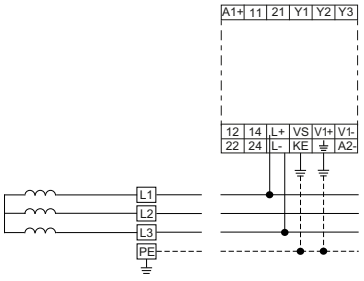	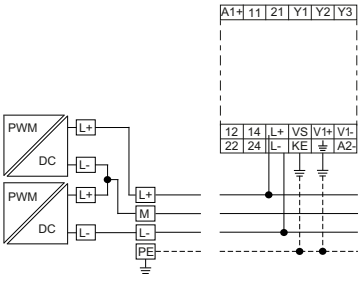

4-wire AC system

4-wire AC system	
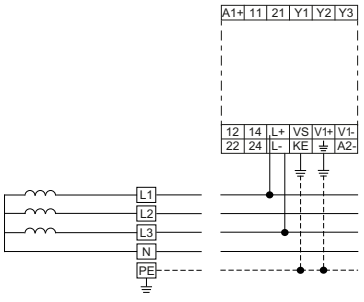	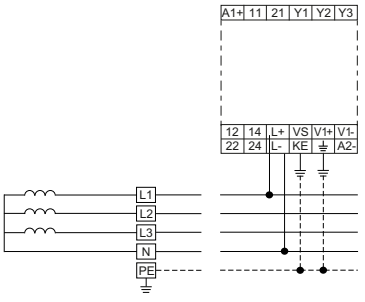

Application examples

The figure below shows monitoring for ground fault/insulation fault in the case of an ungrounded 4-wire AC system.

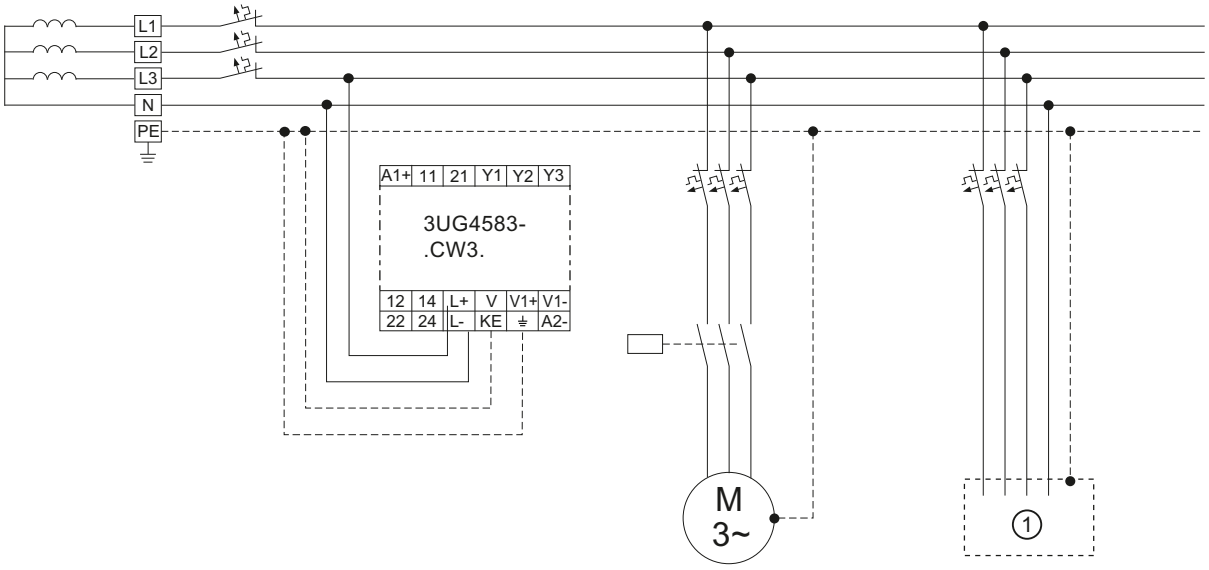

① Loads

Figure 9-10 Monitoring for ground fault/insulation fault in the case of an ungrounded 4-wire AC system

Note

The maximum cable length of the control cables is 50 m or 100 pF/m.

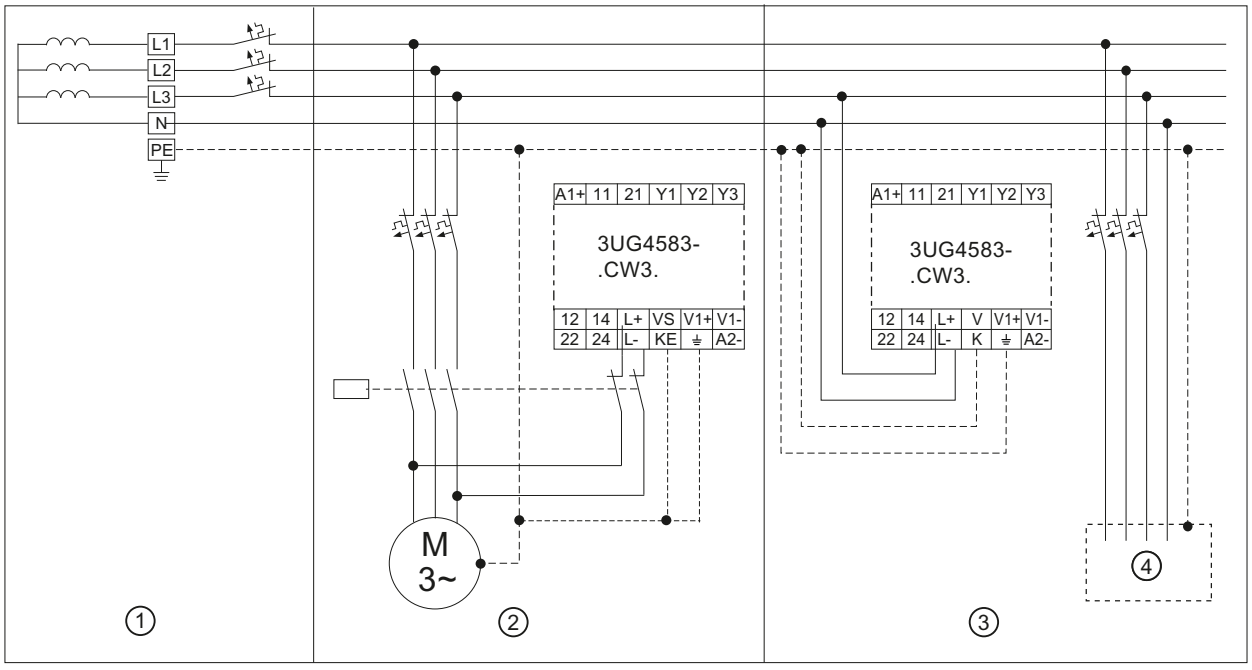

① The voltage source is the secondary side of an isolating transformer that galvanically isolates the system and the downstream circuit.

② The insulation resistance of this motor feeder is always monitored when the motor is switched off. If the motor contactor drops out, the two NC contacts connect the measuring circuit with the motor cables.

③ The 3UG4583-.CW3. insulation monitoring relay permanently monitors the insulation resistance of the remaining system with all connected loads.

④ Loads

Figure 9-11 Monitoring for ground fault/insulation fault with different load circuits

Note

The maximum cable length of the control cables is 50 m or 100 pF/m.

9.4.6 Characteristics

Characteristics of the 3UG4582 insulation monitoring relays

The characteristics below show the load limit curves of the 3UG4582 insulation monitoring relays.

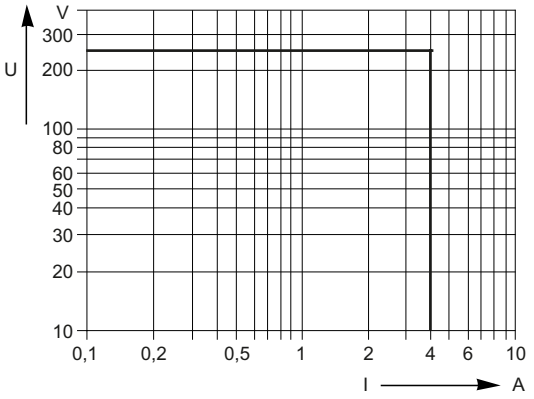

Figure 9-12 AC load (resistive)

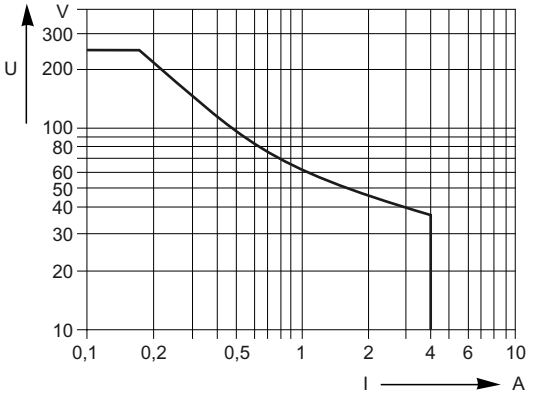

Figure 9-13 DC load (resistive)

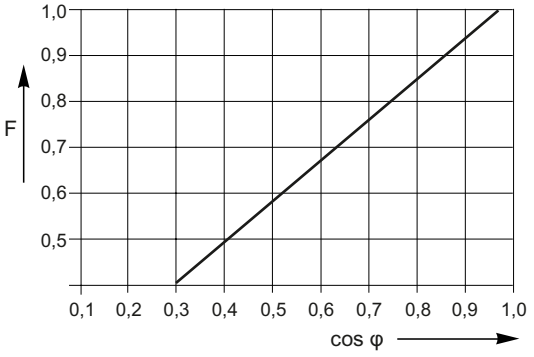

Figure 9-14 Reduction factor F in the case of inductive AC load

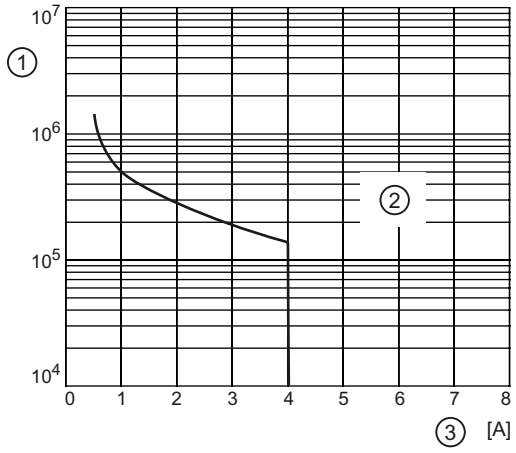

① Operating cycles
② 250 V, resistive load
③ Switching current

Figure 9-15 Contact service life

Characteristics of the 3UG4583 insulation monitoring relays

The characteristics below show the load limit curves of the 3UG4583 insulation monitoring relays.

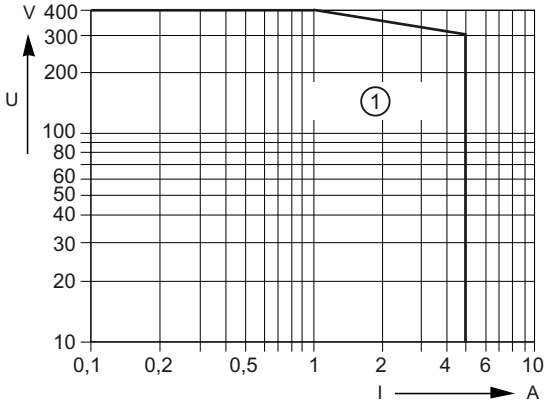

Figure 9-16 AC load (resistive)

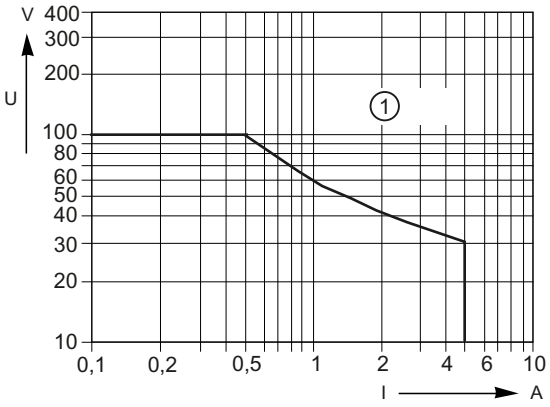

Figure 9-17 DC load (resistive)

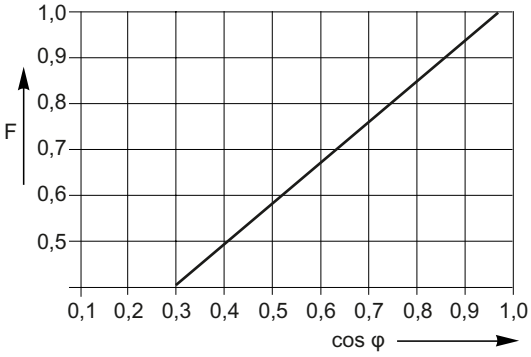

Figure 9-18 Reduction factor F in the case of inductive AC load

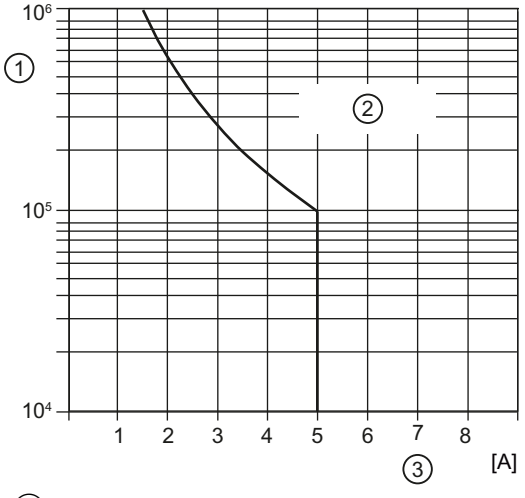

① Operating cycles
② 250 V, resistive load
③ Switching current

Figure 9-19 Contact service life

9.4.7 Technical data

Technical data sheet

You can also find the technical data of the product at Siemens Industry Online Support (https://support.industry.siemens.com/cs/ww/en/ps/16367/td).

1. Enter the full article number of the desired device in the "Product" field, and confirm with the Enter key.
2. Click the "Technical data" link.

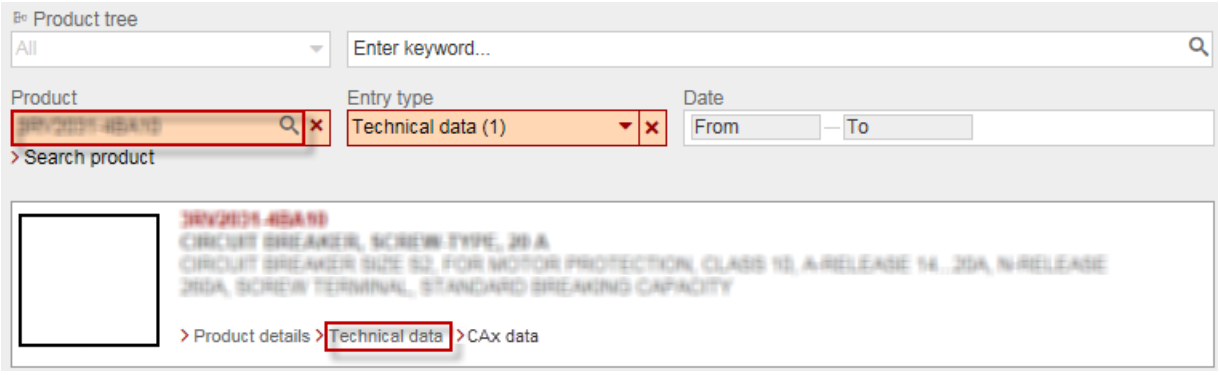

3UG463. voltage monitoring relay

10

10.1 Application areas

Application areas

The voltage monitoring relays are used, for example, in the following applications:

Table 10-1 Application areas of the voltage monitoring relays

Function	Application
• Undervoltage • Overvoltage	• Increased current on a motor with corresponding overheating • Unintended device reset • Power system collapse on overloaded supply voltages • Fork-lift trucks • Heating systems • Cranes • Elevators • Protection from undervoltage (especially with battery power; result: e.g. exhaustive discharge) • System protection against destruction caused by supply overvoltages • Energy supply to the line • Machine switch-on when a defined voltage is reached • Threshold switch for analog signals from 0.1 to 10 V

10.2 3UG4631 / 3UG4632 voltage monitoring relay

10.2.1 Operator controls and connection terminals

Front view / terminal labeling 3UG4631 / 3UG4632

Front view	Description	
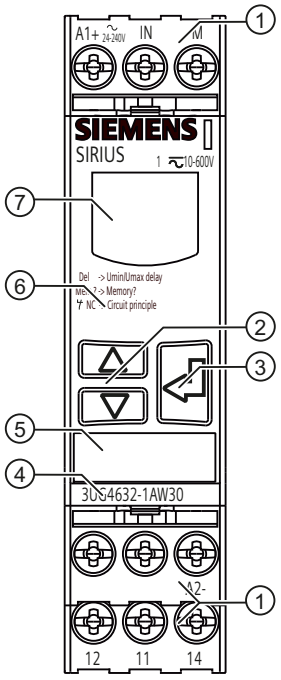	**Position digits**	
	①	Terminal block (removable): Connection is possible using screw terminals or spring-loaded terminals.
	②	Arrow keys for menu navigation
	③	SET key for menu navigation
	④	Device article number
	⑤	Label
	⑥	Legend for menu
	⑦	Display for parameterization, actual-value indication, and diagnostics
	Terminal labels	
	A1+	Rated control supply voltage ~ / +
	A2-	Rated control supply voltage ~ / -
	M (GND)	Measuring signal input -
	IN	Measuring signal input +
	12	Output relay K1 CO contact NC contact
	11	Output relay K1 CO contact root
	14	Output relay K1 CO contact NO contact

You can find additional information on the connection terminals and the permissible conductor cross-sections in the Chapter "Connection methods (Page 18)".

You can find information on connecting in the Chapter "Circuit diagrams (Page 201)".

10.2.2 Functions

General functionality

Depending on the setting, the 3UG4631 / 3UG4632 voltage monitoring relays are powered with a rated control supply voltage of 24 V AC/DC or 24 to 240 AC/DC and monitor an AC voltage or DC voltage at terminals IN and M of the device for **overshoot** (U▲) or **undershoot** (U▼) or in **range monitoring** (U▲ and U▼).

The 3UG4631 / 32 voltage monitoring relays have a display and are parameterized with three keys.

You will find the adjustment ranges and factory settings of the available parameters in Chapter "Operation (Page 198)".

You can find a description of the individual parameters in Chapter "Parameters (Page 265)".

Monitoring

The output relay K1 responds in accordance with the set relay switching behavior (closed-circuit principle NC or open-circuit principle NO). The set tripping delay time starts if the monitored voltage overshoots or undershoots the corresponding set threshold value. After expiry of the tripping delay time, the output relay K1 changes the switching state. On the display, the currently displayed measuring value and the symbol for undershoot or overshoot flash.

An output change-over contact is available as a signaling contact.

If the rated control supply voltage is switched on and no monitoring voltage is yet present, the display indicates 0.0 V and shows a symbol for voltage overshoot monitoring, voltage undershoot monitoring, or range monitoring.

You will find the switching states of the output relay below in the section entitled "Function diagrams" and in Chapter "Diagnostics (Page 199)."

Function diagrams 3UG4631 / 3UG4632

Display	Memory = no Relay switching behavior = NC (closed-circuit principle)	Memory = no Relay switching behavior = NO (open-circuit principle)
U▲ U▼ = off	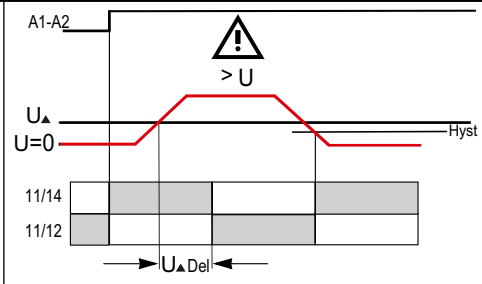	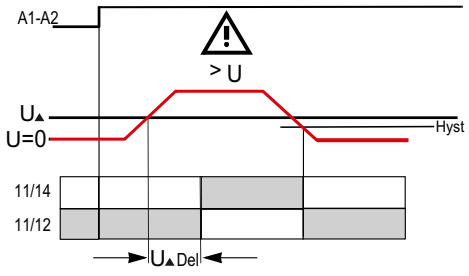
U▲ = off U▼	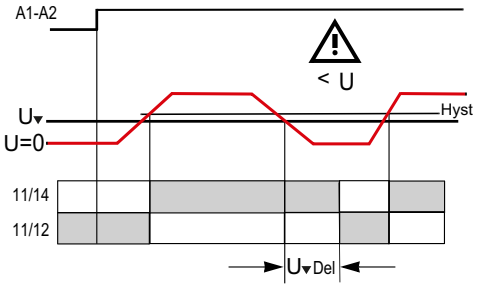	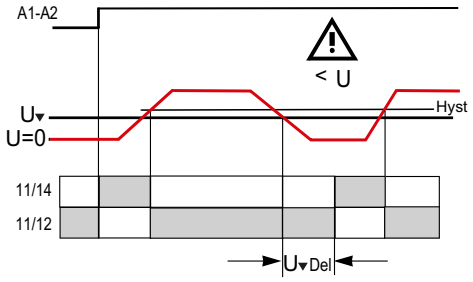
U▲ U▼	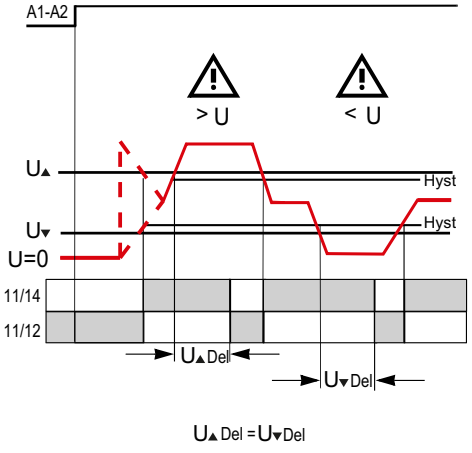	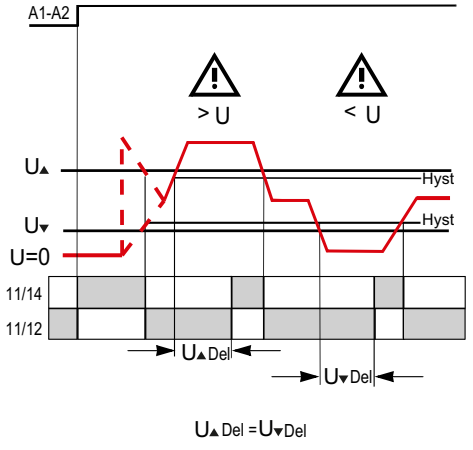

10.3 3UG4633 voltage monitoring relay

10.3.1 Operator controls and connection terminals

Front view / terminal assignment 3UG4633

Front view	Description	
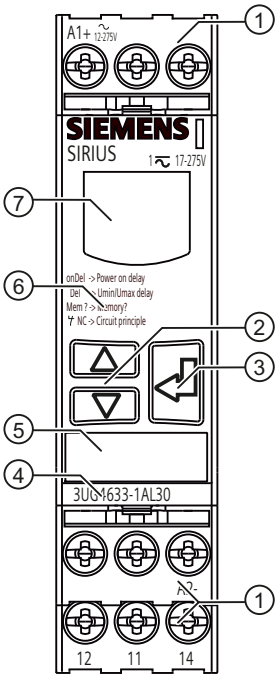	**Position digits**	
	①	Terminal block (removable): Connection is possible using screw terminals or spring-loaded terminals.
	②	Arrow keys for menu navigation
	③	SET key for menu navigation
	④	Device article number
	⑤	Label
	⑥	Legend for menu
	⑦	Display for parameterization, actual-value indication, and diagnostics
	Terminal labels	
	A1+	Rated control supply voltage ~ / +
	A2-	Rated control supply voltage ~ / -
	12	Output relay K1 CO contact NC contact
	11	Output relay K1 CO contact root
	14	Output relay K1 CO contact NO contact

You can find additional information on the connection terminals and the permissible conductor cross-sections in the Chapter "Connection methods (Page 18)".

You can find information on connecting in the Chapter "Circuit diagrams (Page 201)".

10.3.2 Functions

General functionality

Depending on the setting, the 3UG4633 voltage monitoring relays are **self-powered** (measuring voltage = rated control supply voltage) and monitor an AC voltage or DC voltage at terminals A1 and A2 of the device for **overshoot** (U▲) or **undershoot** (U▼) or in **range monitoring** (U▲ and U▼).

The voltage monitoring relays are powered with a rated control supply voltage of 17 to 275 V AC/DC through terminals A1/A2.

The 3UG4633 voltage monitoring relays have a display and are parameterized with three keys.

You will find the setting ranges and factory settings of the available parameters in Chapter "Operation (Page 198)."

You will find a description of the individual parameters in Chapter "Parameters (Page 265)."

Monitoring

Output relay K1 responds in accordance with the set relay switching behavior (closed-circuit principle NC or open-circuit principle NO).

An output change-over contact is available as a signaling contact.

If the voltage is switched on, the display will show the current measured value and a symbol for monitoring for voltage overshoot, voltage undershoot, or range monitoring.

Startup delay

To be able to start a drive, the output relay switches to the correct state during the ON-delay time (onDel) depending on the selected open-circuit principle or closed-circuit principle, even if the measured value is still under the set value.

Tripping delay

If the measured value overshoots or undershoots the set threshold after expiry of the ON-delay time (onDel), the set tripping delay time (Del) and the relay symbol will flash. After expiry of this time, the output relays change the switching state. On the display, the current measuring value and the symbol for undershoot or overshoot flash.

You will find the switching states of the output relay below in the section entitled "Function diagrams" and in Chapter "Diagnostics (Page 199)."

Function diagrams 3UG4633

Display	Memory = no Relay switching behavior = NC (closed-circuit principle)	Memory = no Relay switching behavior = NO (open-circuit principle)
U▲ U▼ = off	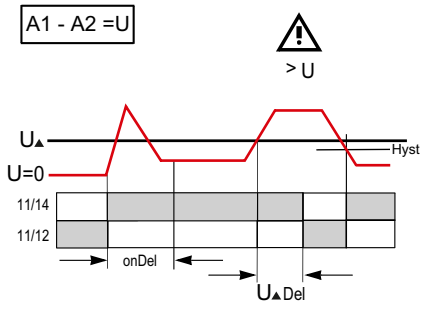	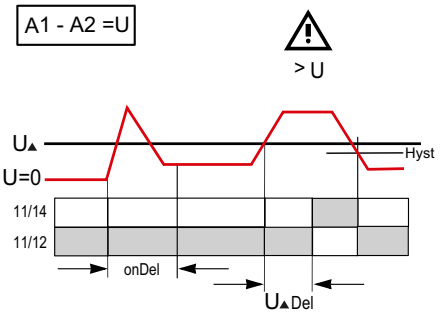
U▲ = off U▼	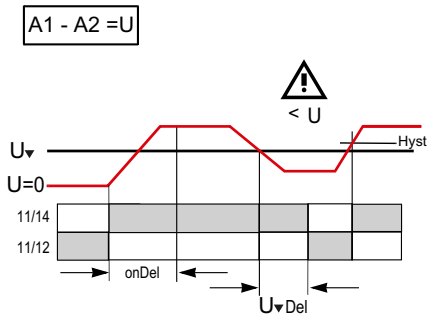	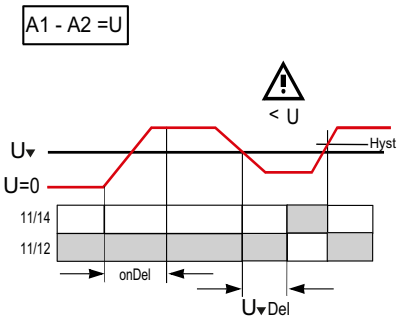
U▲ U▼	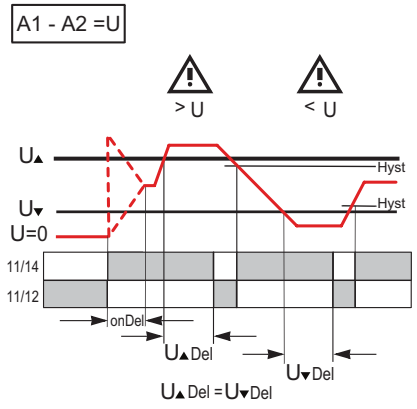	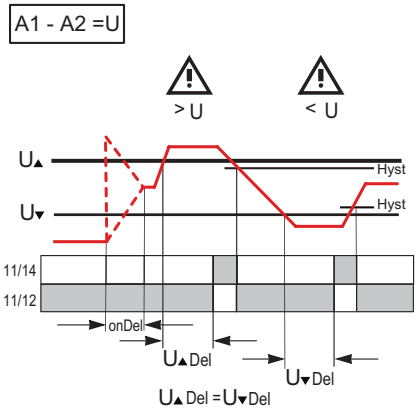

10.4 Operation

Parameters

Parameterization of the devices is possible locally using the display and the three keys.

Parameter information

The table below shows the settable parameter information of the 3UG463. voltage monitoring relays:

Table 10-2 Parmeter information, 3UG463. voltage monitoring relays with digital setting

Menu level	Parameters	Setting range		Increment	Factory setting
		Minimum value	Maximum value		
"RUN"	Threshold for undershoot (U▼)	0.1 V or OFF[1)] 10 V or OFF[2)] 17 V or OFF[3)]	60 V[1)] 600 V[2)] 275 V[3)]	0.1 V	20 V[1)] 170 V[2), 3)]
"RUN"	Threshold for overshoot (U▲)	0.1 V or OFF[1)] 10 V or OFF[2)] 17 V or OFF[3)]	60 V[1)] 600 V[2)] 275 V[3)]	0.1 V	30 V[1)] 260 V[2),3)]
"SET"	Hysteresis (Hyst)	0.1 V	30 V[1)] 300 V[2)] 150 V[3)]	0.1 V	2 V[1)] 5 V[2), 3)]
"SET"	ON-delay time (onDel)	0.1 s[3)]	20 s[3)]	0.1 s[3)]	0.1 s[3)]
"SET"	Tripping delay time (U▲▼Del)	0.1 s	20 s	0.1 s	0.1 s
"SET"	Reset response (Mem)	no = Autoreset	yes = Hand-RESET	--	no = Autoreset
"SET"	Relay switching behavior (closed-circuit principle NC / open-circuit principle NO)	NC	NO	--	NC

1) 3UG4631 voltage monitoring relay

2) 3UG4632 voltage monitoring relay

3) 3UG4633 voltage monitoring relay

Note

The monitoring mode "Overshoot" or "Undershoot" is defined with the setting OFF at the threshold for undershoot or overshoot.

Note

Deactivating monitoring

If the upper and lower threshold values are deactivated (OFF), monitoring will cease for:

- Voltage overshoot
- Voltage undershoot

The up-to-date measured value is displayed permanently.

The parameters are described in Chapter "Parameters (Page 265)."

Menu-based operation is described in Chapter "Menu-based operation (Page 37)."

10.5 Diagnostics

10.5.1 Indications on the display

Display information

The display is divided into three different areas.

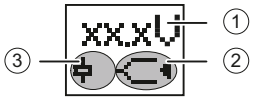

① Voltage measured value or fault symbol
② Type of monitoring
③ Symbol of the changeover contact

Meaning of the information on the display

Note

Indications in the event of a fault

The symbols on the display flash to indicate an error.

The following statuses and faults are indicated on the display as a diagnostics message with flashing symbols:

Display area	Symbol	Meaning
①	20.0V	Measured voltage is displayed
②		Monitoring for voltage overshoot
②		Monitoring for voltage undershoot

Display area	Symbol	Meaning
②	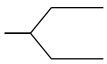	Range monitoring (monitoring for voltage overshoot and undershoot)
②	◄	Voltage is in correct range
②	▲	A voltage overshoot has occurred
②	▼	A voltage undershoot has occurred
③		• Not flashing: Relay contact 11/12 open, relay contact 11/14 closed • Flashing: Delay time (ON-delay or tripping delay) running • Masked out: Relay contact 11/12 closed, relay contact 11/14 open

You will find more information about the switching behavior of the output relay in Chapter "Functions (Page 192)" (3UG4631 / 3UG4632) and "Functions (Page 195)" (3UG4633).

10.5.2 Reset

RESET

How the outputs are reset depends on the "Reset response" parameter (see Chapter "Reset response (Page 265)").

The following settings can be selected:

- Automatic reset (Memory = O / Mem = no)
  The device is reset automatically as soon as a previously occurring error has been dealt with.
- Manual RESET (Memory = I / Mem = yes)
  To reset the devices with digital setting, it is necessary to press both arrow keys ▲▼ simultaneously for more than 2.5 s after removal of the cause of error. If the cause of the error has not been removed, a new error message appears immediately. Alternatively, the devices can be reset by switching the rated control supply voltage on and off.

10.6 Circuit diagrams

10.6.1 Internal circuit diagrams

Internal circuit diagrams 3UG4631 / 3UG4632 and 3UG4633

3UG4631 / 3UG4632 voltage monitoring relays

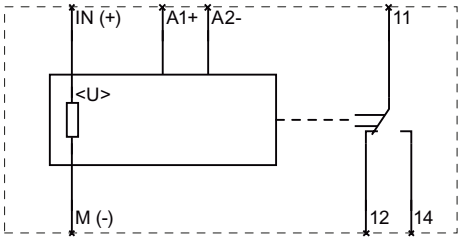

3UG4633 voltage monitoring relay

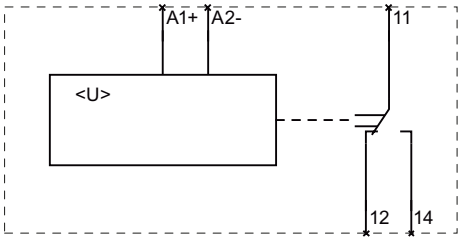

Note

On the 24 V AC/DC versions of the 3UG4631-.AA30 and 3UG4632-.AA30, terminals A2 and M (GND) are electrically connected in the device!

On the 24 to 240 V AC/DC versions of the 3UG4631-.AW30 and 3UG4632-.AW30, terminals A2 and M (GND) are electrically separated!

10.6.2 Wiring examples

3UG4631-.AA30 / 3UG4632-.AA30

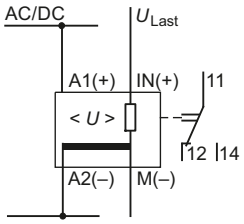

Figure 10-1 3UG4631-.AA30 / 3UG4632-.AA30

3UG4631-.AW30 / 3UG4632-.AW30

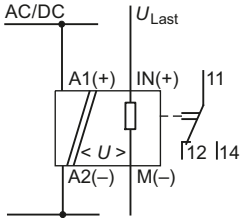

Figure 10-2 3UG4631-.AW30 / 3UG4632-.AW30

3UG4633

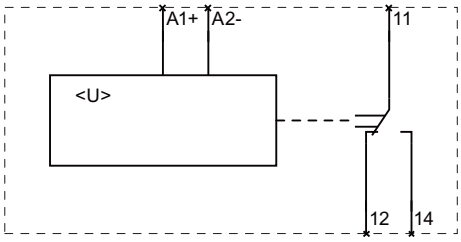

Figure 10-3 3UG4633

10.7 Technical data

Technical data sheet

You can also find the technical data of the product at Siemens Industry Online Support (https://support.industry.siemens.com/cs/ww/en/ps/16367/td).

1. Enter the full article number of the desired device in the "Product" field, and confirm with the Enter key.
2. Click the "Technical data" link.

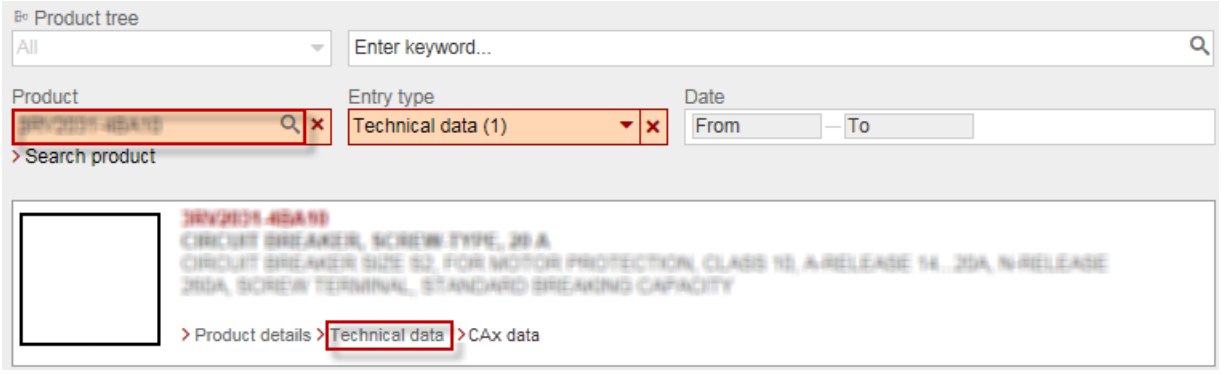

3UG4641 cos phi and active current monitoring relay 11

11.1 Application areas

Application areas

The cos phi and active current monitoring relays are used, for example, in the following application areas:

Table 11-1 Application areas of the cos phi and active current monitoring relays

Function	Application
• No-load monitoring and load shedding • Underload monitoring in the low-end performance range • Monitoring for overload • Simple cos phi monitoring in power systems for controlling compensation systems • Cable break between the control cabinet and the motor	• Fans (in the case of a broken fan belt, for example) • Pumps (in the case of an idling pump, for example) • Filter system (a contaminated filter system, for example) • Reactive power compensation • Sawing system • Conveyor belt • Surface grinding machine • Breaking mill • Milling machine • Car wash • Lifting platform • Screw conveyor • Crane • Turning machine • Infrared heating system

11.2 Operator controls and connection terminals

Front view / terminal labeling 3UG4641

Front view	Description	
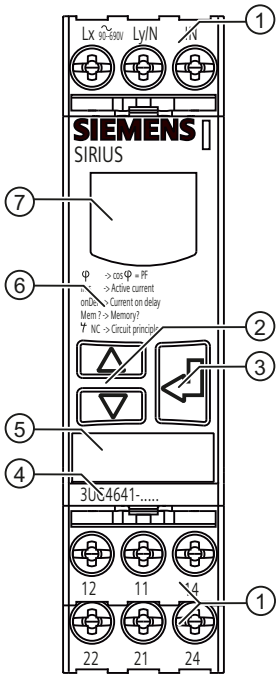	**Position digits**	
	①	Terminal block (removable): Connection is possible using screw terminals or spring-loaded terminals.
	②	Arrow keys for menu navigation
	③	SET key for menu navigation
	④	Device article number
	⑤	Label
	⑥	Legend for menu
	⑦	Display for parameterization, actual-value indication, and diagnostics
	Terminal labels	
	Lx	Power supply (measuring signal) ~ / +
	Ly/N	Power supply (measuring signal) ~ / +
	IN	Measuring signal input (current)
	12	Output relay K1 CO contact NC contact
	11	Output relay K1 CO contact root
	14	Output relay K1 CO contact NO contact
	22	Output relay K2 CO contact NC contact
	21	Output relay K2 CO contact root
	24	Output relay K2 CO contact NO contact

You can find additional information on the connection terminals and the permissible conductor cross-sections in the Chapter "Connection methods (Page 18)".

You can find information on connecting in the Chapter "Circuit diagrams (Page 213)".

11.3 Functions

General functionality

The 3UG4641 cos phi and active current monitoring relays are **self-powered** (measuring voltage = rated control supply voltage) and monitor the cos phi value (PF: power factor) and the resulting active current I_{res} (I resistive), depending on the setting, for **overshoot** (φ▲ / I_{res}▲), **undershoot** (φ▼ / I_{res}▼) or in **range monitoring** (φ▲ and φ▼ / I_{res}▲ and I_{res}▼). The load to be monitored is connected upstream of the terminal IN. The load current flows through terminals IN and Ly / N. The devices are powered with a voltage of 90 to 690 V through the terminals Lx and Ly / N .

The 3UG4641 cos phi and active current monitoring relays have a display and are parameterized with three keys.

You will find the adjustment ranges and factory settings of the available parameters in Chapter "Operation (Page 211)".

You can find a description of the individual parameters in Chapter "Parameters (Page 265)".

Note

The specified voltages represent the absolute thresholds.

Monitoring

If the motor is switched on and the current value overshoots the measuring range limit 0.2 A, the set ON-delay time begins (onDel). During this time, undershooting or overshooting of the set threshold values will not result in a relay response of the CO contact.

If monitoring for active current undershoot is switched off (I_{res}▼ = off), and if the load current undershoots the lower measuring range threshold (0.2 A), the change-over contacts remain unchanged. If a threshold is set for monitoring for active current undershoot, undershoot of the measuring range threshold (0.2 A) will result in a relay response of the change-over contacts.

Note

In the case of active currents I_{res} > 10 A, commercially available current transformers, e.g. 4NC, can be used as accessories. You will find more information in Catalog LV10 (https://support.industry.siemens.com/cs/de/de/view/109482234/en).

Startup delay

To be able to start a drive, the output relay switches to the correct state during the ON-delay time (onDel) depending on the selected open-circuit principle or closed-circuit principle, even if the measured value is still under the set value.

Tripping delay

If the measured value overshoots or undershoots the set threshold after expiry of the ON-delay time (onDel), the set tripping delay time (Del) and the relay symbol will flash. After expiry of this time, the output relays change the switching state. On the display, the current measuring value and the symbol for undershoot or overshoot flash.

You will find the switching states of the output relays below in section "Function diagrams" and in Chapter "Diagnostics (Page 212)."

Function diagrams 3UG4641 (lower current measuring threshold 0.2 A)

Display	Memory = no Relay switching behavior = NC (closed-circuit principle)	Memory = no Relay switching behavior = NO (open-circuit principle)
I_r ▼	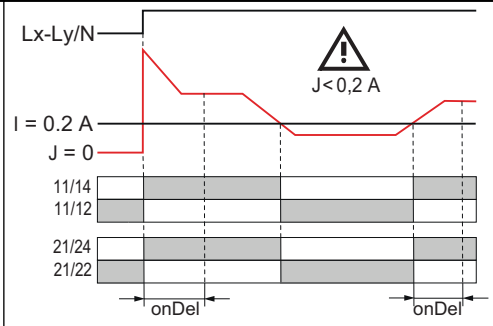	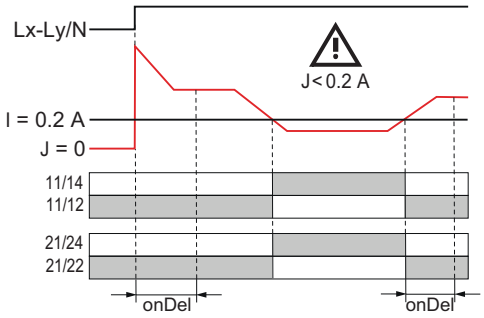
I_r ▼ = off	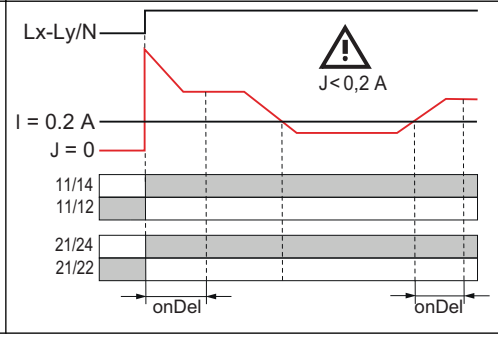	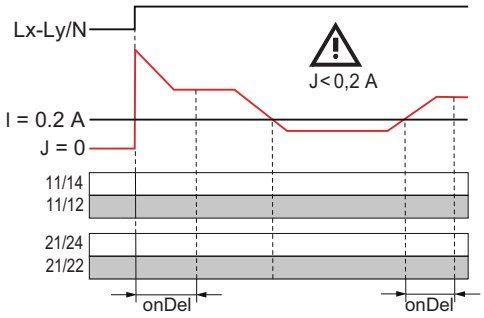

J = currently set current value

I = set threshold value for the current

Function diagrams 3UG4641 (active current monitoring I_{res})

Display	Memory = no Relay switching behavior = NC (closed-circuit principle)	Memory = no Relay switching behavior = NO (open-circuit principle)
I_r▲ I_r▼ = off	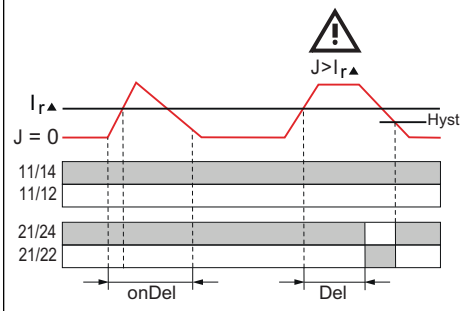	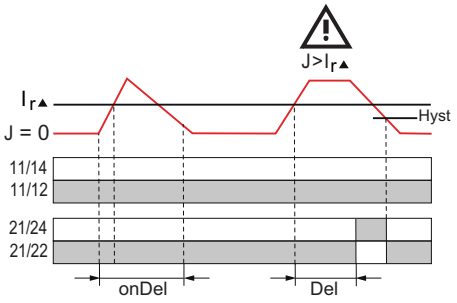
I_r▲ = off I_r▼	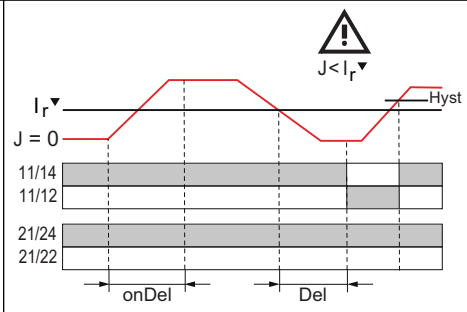	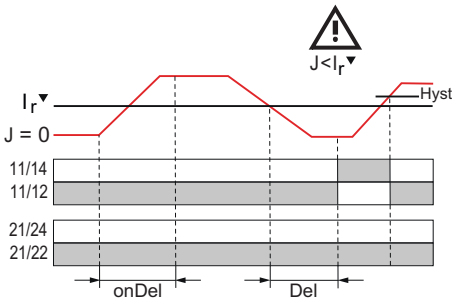
I_r▲ I_r▼	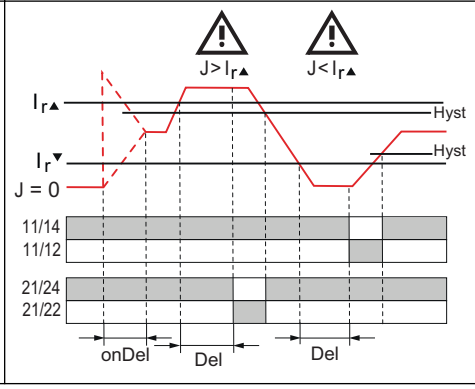	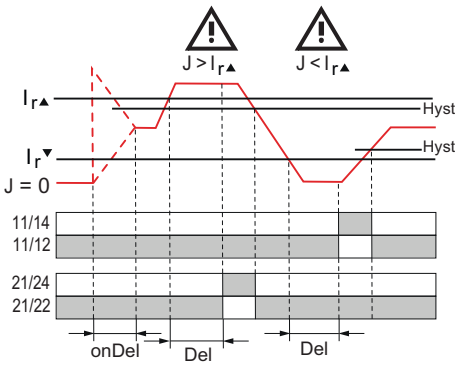

J = currently set current value

I = set threshold value for the current

Function diagrams 3UG4641 (cos phi monitoring)

Display	Memory = no Relay switching behavior = NC (closed-circuit principle)	Memory = no Relay switching behavior = NO (open-circuit principle)
φ▲ φ▼ = off	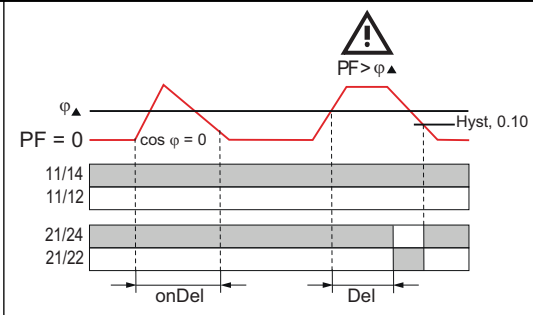	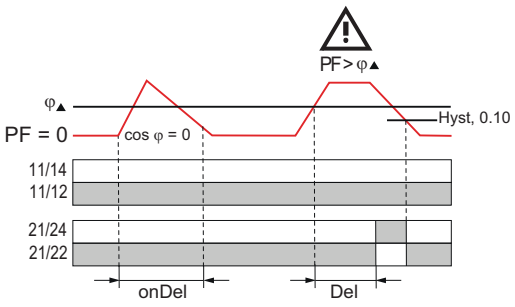
φ▲ = off φ▼	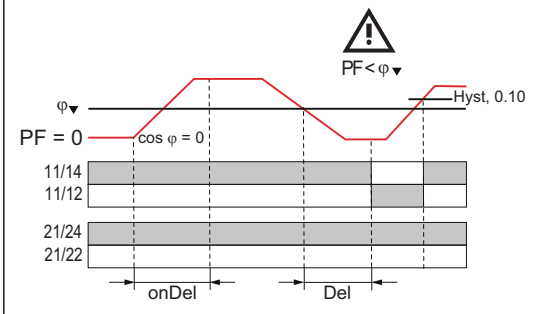	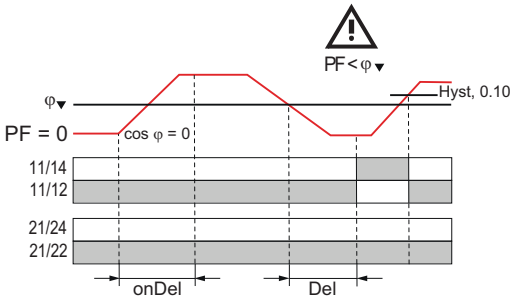
φ▲ φ▼	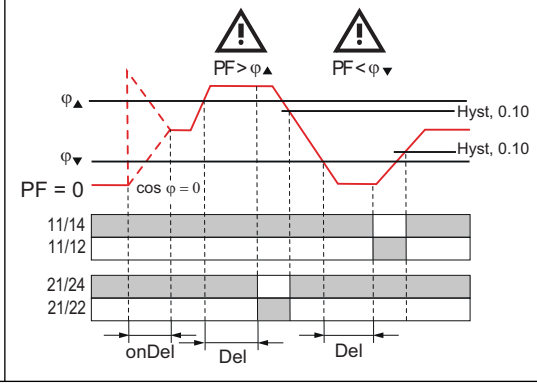	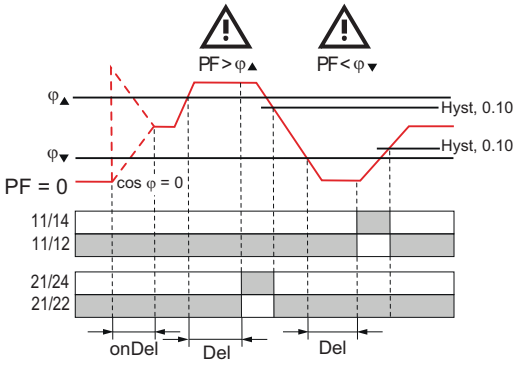

cos φ = currently set value for cos φ

PF = power factor = set threshold for cos φ

11.4 Operation

Parameters

Parameterization of the devices is possible locally using the display and the three keys.

Parameter information

The table below shows the settable parameter information of the 3UG4641 cos phi and active current monitoring relays:

Table 11-2 Parameter information, 3UG4641 cos phi and active current monitoring relay with digital setting

Menu level	Parameters	Setting range		Increment	Factory setting
		Minimum value	Maximum value		
"RUN"	Threshold for undershoot (I_{res}▼)	0.2 A or OFF	10 A	0.1 A	1 A
"RUN"	Threshold for overshoot (I_{res}▲)	0.2 A	10 A or OFF	0.1 A	3 A
"RUN"	Threshold for undershoot (φ▼)	0.1 or OFF	0,99	0,01	0,2
"RUN"	Threshold for overshoot (φ▲)	0,1	0.99 or OFF	0,01	0,5
"SET"	Hysteresis (Hyst)	0.1 A	2 A	0.1 mA	0.5 A
"SET"	ON-delay time (onDel)	0 s	99 s	1 s	Deactivated (0 s)
"SET"	Tripping delay time (Del)	0.1 s	20 s	0.1 s	0.1 s
"SET"	Reset response (Mem)	no = Autoreset	yes = Hand-RESET	--	no = Autoreset
"SET"	Relay switching behavior (closed-circuit principle NC / open-circuit principle NO)	NC or NO		--	NC

Note

The monitoring mode "Overshoot" or "Undershoot" is defined with the setting OFF at the threshold for undershoot or overshoot.

The parameters are described in Chapter "Parameters (Page 265)."

Menu-based operation is described in Chapter "Menu-based operation (Page 37)."

11.5 Diagnostics

11.5.1 Indications on the display

Display information

The display is divided into three different areas.

① Current measuring value / cos phi measuring value or error symbol
② Type of monitoring
③ Symbols of the changeover contacts

Meaning of the information on the display

Note

Indications in the event of a fault

The symbols on the display flash to indicate an error.

The following statuses and faults are indicated on the display as a diagnostics message with flashing symbols:

Display area	Symbol	Meaning
①	5.0A	Displays the measured current
②		Monitoring for overshoot (φ▲ / I_{res}▲) (output relay K2)
②		Monitoring for undershoot (φ▼ / I_{res}▼) (output relay K1)
②	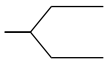	Window monitoring (φ▲ and φ▼ / I_{res}▲ and I_{res}▼)
②	◄	Measuring values are in the correct range
②	▲	A measuring value overshoot has occurred
②	▼	A measuring value undershoot has occurred
③		• Not flashing: Relay contact 11/12 open, relay contact 11/14 closed • Flashing: Delay time (ON-delay or tripping delay) running • Masked out: Relay contact 11/12 closed, relay contact 11/14 open
③		• Not flashing: Relay contact 21/22 open, relay contact 21/24 closed • Flashing: Delay time (ON-delay or tripping delay) running • Masked out: Relay contact 21/22 closed, relay contact 21/24 open

You will find more information about the switching behavior of the output relay in Chapter "Functions (Page 206)."

11.5.2 Reset

RESET

How the outputs are reset depends on the "Reset response" parameter (see Chapter "Reset response (Page 265)").

The following settings can be selected:

- Automatic reset (Memory = O / Mem = no)
  The device is reset automatically as soon as a previously occurring error has been dealt with.
- Manual RESET (Memory = I / Mem = yes)
  To reset the devices with digital setting, it is necessary to press both arrow keys simultaneously for more than 2.5 s after removal of the cause of error. If the cause of the error has not been removed, a new error message appears immediately. Alternatively, the devices can be reset by switching the rated control supply voltage on and off.

11.6 Circuit diagrams

11.6.1 Internal circuit diagrams

Internal circuit diagrams 3UG4641

3UG4641 cos phi and active current monitoring relay

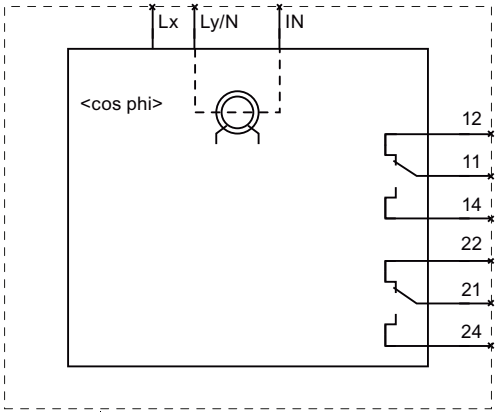

11.6.2 Wiring examples

Cos phi and active current monitoring for single-phase motors

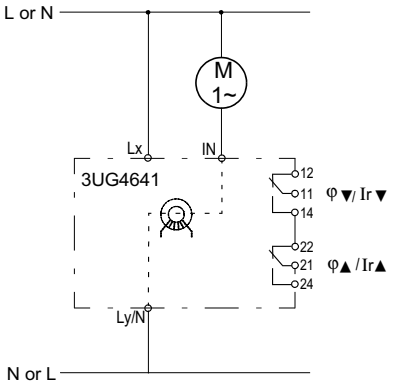

Figure 11-1 Cos phi and active current monitoring for single-phase motors

Cos phi and active current monitoring for three-phase motors

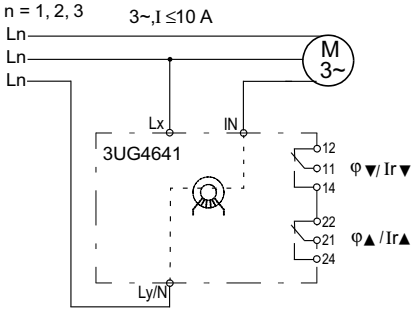

Cos phi and active current monitoring for three-phase motors

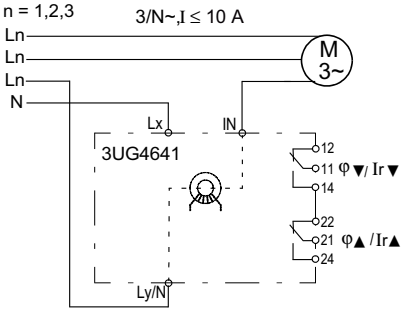

Cos phi and active current monitoring for three-phase motors (with neutral conductor)

Cos phi and active current monitoring for three-phase motors with transformers for currents

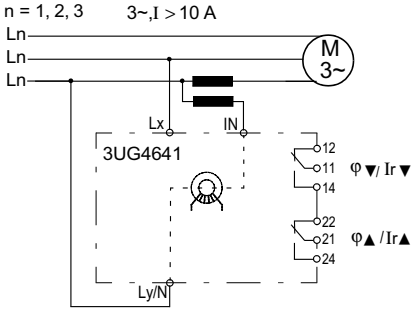

Cos phi and active current monitoring for three-phase motors with transformers for currents

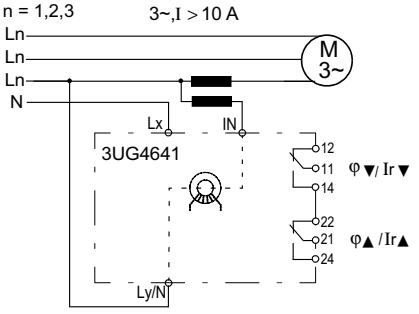

Cos phi and active current monitoring for three-phase motors with transformer for currents (with neutral conductor)

11.7 Technical data

Technical data sheet

You can also find the technical data of the product at Siemens Industry Online Support (https://support.industry.siemens.com/cs/ww/en/ps/16367/td).

1. Enter the full article number of the desired device in the "Product" field, and confirm with the Enter key.
2. Click the "Technical data" link.

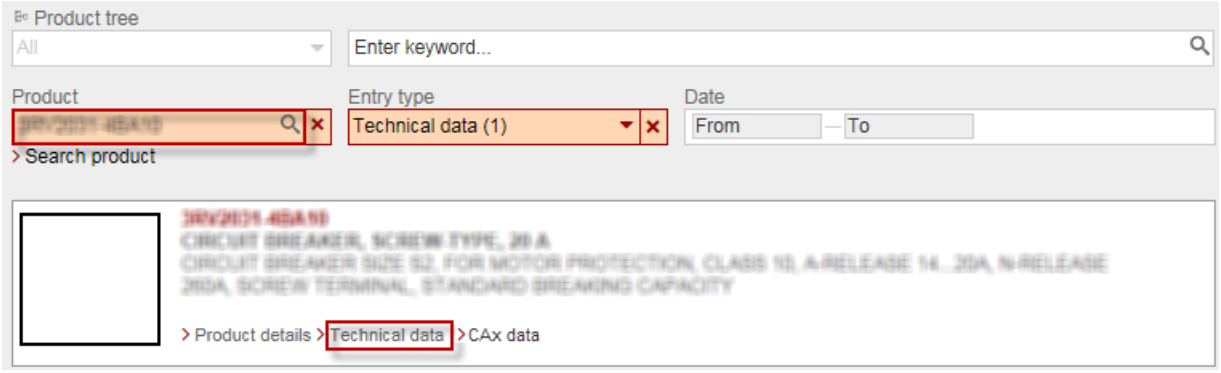

3UG4651 speed monitoring relay

12

12.1 Application areas

Application areas

The speed monitoring relays are used, for example, in the following applications:

Table 12-1 Application areas of the speed monitoring relays

Function	Application
• Monitoring for overload/underload	• Conveyor belt (monitoring transported goods for completeness, for example) • Milling machine • Turning machine • Slippage or tear of a drive belt

The speed monitoring relays can also be used for all functions where a continuous pulse signal is to be monitored (e.g. belt travel monitoring, completeness check, pass monitoring, or cycle time monitoring).

12.2 Operator controls and connection terminals

Front view / terminal labeling 3UG4651

Front view	Description	
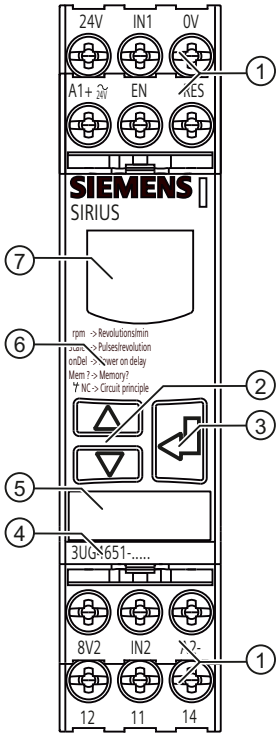	**Position digits**	
	①	Terminal block (removable): Connection is possible using screw terminals or spring-loaded terminals.
	②	Arrow keys for menu navigation
	③	SET key for menu navigation
	④	Device article number
	⑤	Label
	⑥	Legend for menu
	⑦	Display for parameterization, actual-value indication, and diagnostics
	Terminal labels	
	A1+	Rated control supply voltage ~ / +
	A2-	Rated control supply voltage ~ / -
	24V	Supply voltage for pulse input IN1 (24 V / max. 50 mA)
	IN1	Pulse input for pnp-switching three-wire sensor (for 0 V DC/ +24 V pulses)
	0V	Supply voltage for pulse input IN1 (0 V / max. 50 mA)
	EN	Enable
	RES	Reset
	IN2	Pulse input for two-wire NAMUR sensor or mechanical contact
	8V2	Supply voltage for pulse input IN2
	12	Output relay K1 CO contact NC contact
	11	Output relay K1 CO contact root
	14	Output relay K1 CO contact NO contact

You can find additional information on the connection terminals and the permissible conductor cross-sections in the Chapter "Connection methods (Page 18)".

You can find information on connecting in the Chapter "Circuit diagrams (Page 224)".

12.3 Functions

General functionality

Depending on the setting, the speed monitoring relays monitor a speed in revolutions per minute (rpm) for **overshoot** (rpm▲), **undershoot** (rpm▼) or in **range monitoring** (rpm▲ and rpm▼). Depending on their design, the devices are powered with a rated control supply voltage of 24 V AC/DC or 24 to 240 V AC/DC supply voltage through terminals A1/A2.

The 3UG4651 speed monitoring relays have a display and are parameterized with three keys.

You will find the adjustment ranges and factory settings of the available parameters in Chapter "Operation (Page 222)".

You can find a description of the individual parameters in Chapter "Parameters (Page 265)".

Speed monitoring functions according to the principle of period duration measurement.

In the speed monitoring relay, the time interval between two consecutive rising edges of the pulse encoder is measured and compared with the minimum and/or maximum permissible period duration calculated from the set threshold values for the speed. Period duration measurement detects a speed deviation after only two pulses.

By using up to ten pulse encoders distributed simultaneously across the range, the period duration, and thus the response time, can be reduced. By taking account of the number of sensors in the speed monitoring relay, the speed continues to be displayed in revolutions per minute.

The number of pulses supplied by the pulse encoder can be defined with the help of entering a scaling value (Scale). This allows the revolutions per minute to be read direct on the display.

The speed monitoring relays have two different pulse inputs. Only one of these may be used! A pnp-switching three-wire sensor for 0 V / +24 V DC pulses can be connected at terminal IN1. It is supplied from the output relay via terminals 0V and 24V / with up to 50 mA. Use of a mechanical pulse contact with an external DC supply of 4.5 to 30 V is also permissible at terminal IN1.

Note

To detect the edges reliably, the pulses and pauses between pulses of the pulse encoders used must be applied for at least 5 ms. A pause is detected at voltage level < 1 V. A pulse requires a minimum value of 4.5 V.

Alternatively, a two-wire NAMUR sensor supplied from terminal 8V2, or a mechanical contact, can be connected at terminal IN2.

Monitoring

Startup delay

To be able to start a drive, the output relay switches to the correct state during the ON-delay time (onDel) depending on the selected open-circuit principle or closed-circuit principle, even if the measured value is still under the set value.

The ON-delay time is started either by switching on the rated control supply voltage or, if the rated control supply voltage is present, by actuating the relevant contact (e.g. auxiliary contact of a contactor).

Tripping delay

If the measured value overshoots or undershoots the set threshold after expiry of the ON-delay time (onDel), the set tripping delay time (Del) and the relay symbol will flash. After expiry of this time, the output relays change the switching state. On the display, the current measuring value and the symbol for undershoot or overshoot flash.

Operating mode with/without enable contact

In the operating mode without enable contact (terminal EN = Enable not connected), the output relay responds when the rated control supply voltage is switched in accordance with the set closed-circuit principle NC or open-circuit principle NO (relay control is inverted to the closed-circuit principle NC), and the ON-delay time (onDel) is started, provided the lower threshold is not at OFF. If the speed reaches the lower threshold value plus the set hysteresis during this time, the ON-delay time is stopped and normal monitoring begins. If this value has not yet been reached after expiry of the ON-delay time, the output relay switches to the fault state depending on the selected relay switching behavior.

For the functioning of the operating mode with enable contact (terminal EN = Enable is connected to terminal 24V with an isolated NC contact), a rated control supply voltage must be present at terminals A1 and A2 on the monitoring relay. Only when this NC contact is actuated will the ON-delay time (onDel) and the drive (with a second contact, for example) be started.

You will find the switching states of the output relay below in the section entitled "Function diagrams" and in Chapter "Diagnostics (Page 223)."

Function diagrams 3UG4651

Display	Memory = no Relay switching behavior = NC (closed-circuit principle)	
	Without Enable input	**With Enable input**
rpm▲ rpm▼ = off	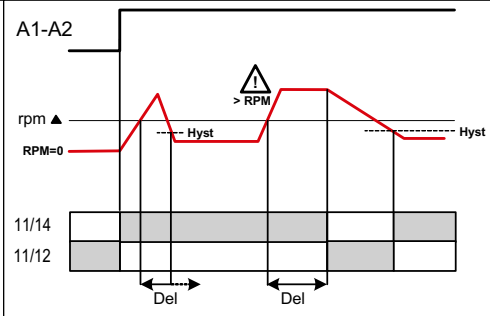	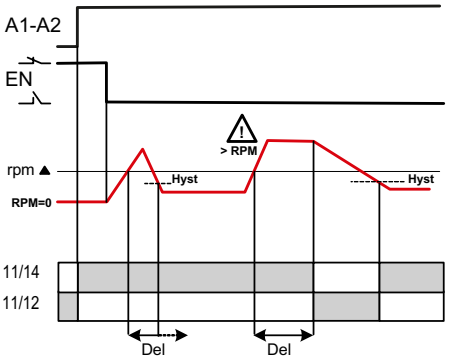
rpm▲ = off rpm▼	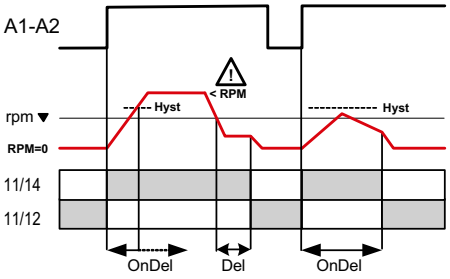	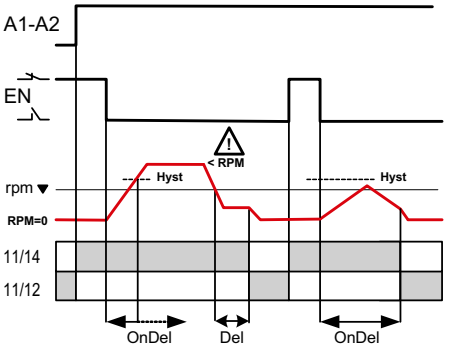
rpm▲ rpm▼	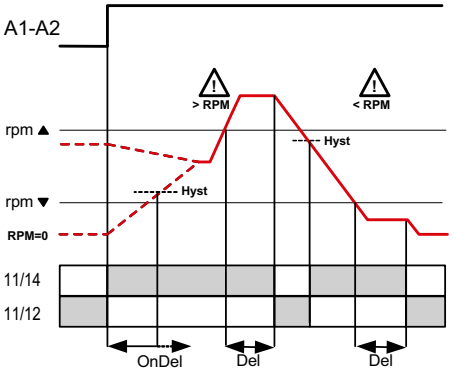	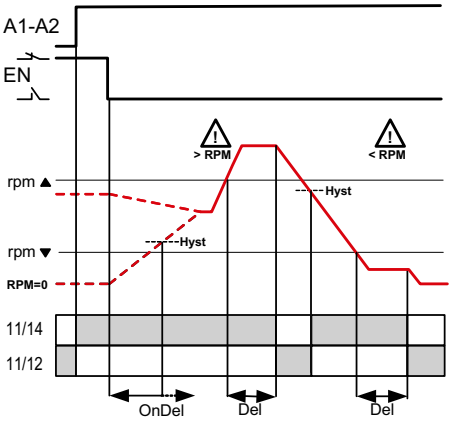

RPM = currently measured speed

rpm = set threshold for the speed

Note

The relay control for the open-circuit principle NO is inverted to the represented function diagrams in the closed-circuit principle NC after application of the rated control supply voltage U_S.

12.4 Operation

Parameters

Parameterization of the devices is possible locally using the display and the three keys.

Parameter information

The table below shows the settable parameter information of the 3UG4651 speed monitoring relays:

Table 12-2 Parmeter information, 3UG4651 speed monitoring relays with digital setting

Menu level	Parameters	Setting range		Increment	Factory setting
		Minimum value	Maximum value		
"RUN"	Threshold for undershoot (rpm▼)	0.10 or OFF	2200 or OFF	0,1	800
"RUN"	Threshold for overshoot (rpm▲)	0.10 or OFF	2200 or OFF	0,1	1400
"SET"	Scaling factor (Scale)	1	10	1	1
"SET"	Hysteresis (Hyst)	0.1 or OFF	99,9	0,1	Disabled (OFF)
"SET"	ON-delay time (onDel)	0 s	900.0 s	0.1 s	Deactivated (0 s)
"SET"	Tripping delay time (Del)	0.1 s	99.9 s	0.1 s	0.1 s
"SET"	Reset response (Mem)	no = Autoreset	yes = Hand-RESET	--	no = Autoreset
"SET"	Relay switching behavior (closed-circuit principle NC / open-circuit principle NO)	NC or NO		--	NC

Note

The monitoring mode "Overshoot" or "Undershoot" is defined with the setting OFF at the threshold for undershoot or overshoot.

The parameters are described in Chapter "Parameters (Page 265)."

Menu-based operation is described in Chapter "Menu-based operation (Page 37)."

12.5 Diagnostics

12.5.1 Indications on the display

Display information

The display is divided into three different areas.

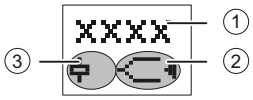

① Speed measured value or fault symbol
② Type of monitoring
③ Symbol of the changeover contact

Meaning of the information on the display

Note

Indications in the event of a fault

The symbols on the display flash to indicate an error.

The following statuses and faults are indicated on the display as a diagnostics message with flashing symbols:

Display area	Symbol	Meaning
①	1100	Measured speed is displayed
②		Monitoring for speed overshoot (rpm▲)
②		Monitoring for speed undershoot (rpm▼)
②	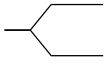	Range monitoring (rpm▲ and rpm▼)
②	◄	Speed is in the correct range
②	▲	A speed overshoot has occurred
②	▼	A speed undershoot has occurred
③		• Not flashing: Relay contact 11/12 open, relay contact 11/14 closed • Flashing: Delay time (ON-delay or tripping delay) running • Masked out: Relay contact 11/12 closed, relay contact 11/14 open

You will find more information about the switching behavior of the output relay in Chapter "Functions (Page 218)."

12.5.2 Reset

RESET

How the outputs are reset depends on the "Reset response" parameter (see Chapter "Reset response (Page 265)").

The following settings can be selected:

- Automatic reset (Memory = O / Mem = no)
  The device is reset automatically as soon as a previously occurring error has been dealt with.
- Manual RESET (Memory = I / Mem = yes)
  To reset the devices with digital setting, it is necessary to press both arrow keys simultaneously for more than 2.5 s after removal of the cause of error. If the cause of the error has not been removed, a new error message appears immediately. Alternatively, the devices can be reset by switching the rated control supply voltage on and off.

12.6 Circuit diagrams

12.6.1 Internal circuit diagrams

Internal circuit diagrams 3UG4651 speed monitoring relay

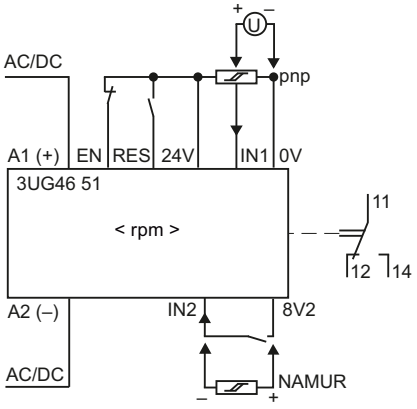

3UG4651-.AA30	24 V AC/DC
3UG4651-.AW30	24 to 240 V AC/DC

Note

On the 24 V AC/DC versions of the 3UG4651-.AA30, terminals A1 / A2 and 0V / 24V are electrically connected in the device!

On the 24 to 240 V AC / DC versions of the 3UG4651-.AW30, terminals A1 / A2 and 0V / 24V are electrically separated!

12.6.2 Wiring examples

Speed monitoring relays without Enable input

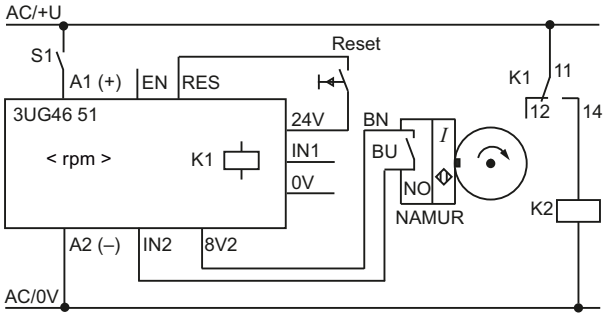

Speed monitoring relays with Enable input

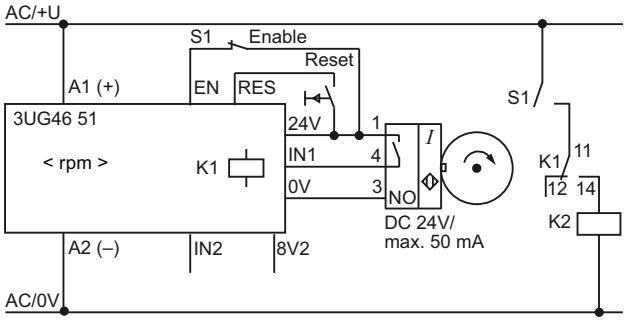

12.7 Technical data

Technical data sheet

You can also find the technical data of the product at Siemens Industry Online Support (https://support.industry.siemens.com/cs/ww/en/ps/16367/td).

1. Enter the full article number of the desired device in the "Product" field, and confirm with the Enter key.
2. Click the "Technical data" link.

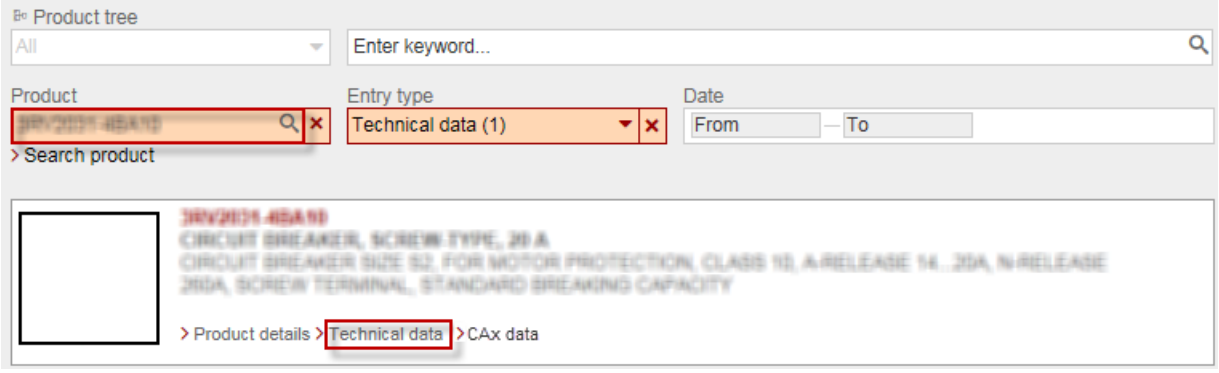

Accessories

13

13.1 Accessories for 3RR2 current monitoring relays

13.1.1 Sealable cover

Description

A sealable cover for use with all sizes (3RR2940) is available for the 3RR2 current monitoring relays with digital and analog setting.

The sealable cover is used to protect the rotary buttons and the slide switch on the current monitoring relay with analog setting or the buttons on the current monitoring relay with digital setting against unauthorized or unintentional tampering.

Siemens also offers a sealable membrane (3TK2820-0AA00) for securing the current monitoring relays with analog setting. The sealable membrane is fixed to the front of the device and secures the rotary buttons and sliding switches against unintentional tampering.

Mounting

The diagram below shows an example mounting scenario based on mounting the sealable cover on the 3RR21 current monitoring relay with analog setting, size S0. The mounting sequence for the sealable cover for size S00 is exactly the same as that for size S0.

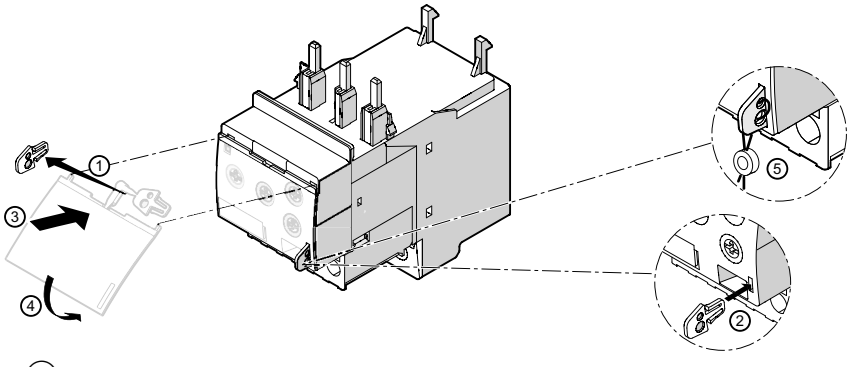

① Remove the key from the cover.
② Insert the key into the designated opening.
③ Attach the hooks on the cover to the openings on the current monitoring relay.
④ Tilt the cover down.
⑤ Lock the cover with the key connector to secure it against unauthorized removal.

Figure 13-1 Mounting the sealable cover on the 3RR2 current monitoring relay

13.1.2 Terminal support for stand-alone assembly

Description

For a stand-alone assembly or if an overload relay is being used at the same time, adapters for stand-alone installation are available for separate DIN rail mounting or screw mounting.

The accessories are exactly the same as the accessories for the 3RU21 thermal overload relay and the 3RB3 solid-state overload relay.

Table 13-1 Stand-alone assembly of the 3RR2 current monitoring relay

Size	Connection system	Terminal support for stand-alone assembly
S00	Screw-type	3RU2916-3AA01
	Spring-loaded	3RU2916-3AC01
S0	Screw-type	3RU2926-3AA01
	Spring-loaded	3RU2926-3AC01
S2	Screw-type	3RU2936-3AA01

Mounting

The terminal supports can be snapped onto 35 mm DIN rails according to DIN EN 50022. They can also be screw-mounted.

The figure below shows how the terminal support for stand-alone assembly is mounted and disassembled, based on the example of an analog setting current monitoring relay.

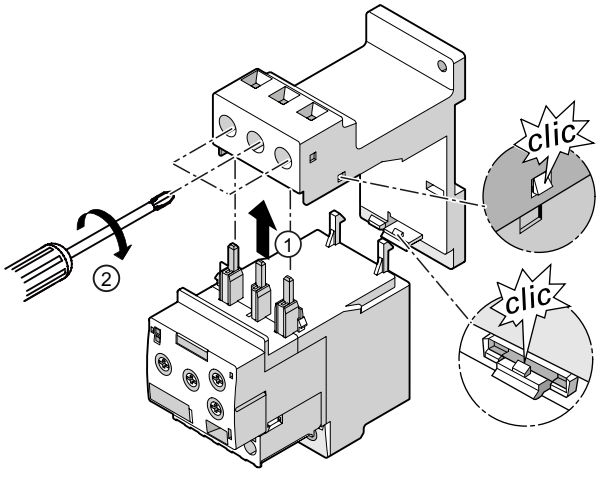

① Guide the current monitoring relay into the terminal support from below.

② Tighten the screws on the terminal support with a Pozidriv size 2 (S00) or Pozidriv size 3 (S0) screwdriver (tightening torque 0.8 to 1.2 Nm).

Check that the cable is clamped tight.

Figure 13-2 Mounting the terminal support (screw-type connection technology in the main circuit)

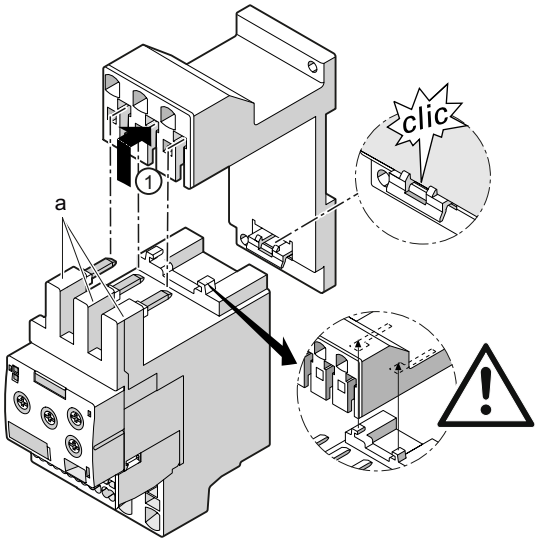

① Insert the contacts (a) into the central opening of the main terminals on the terminal support, with the contacts flush to the right. Make sure that the guide tabs are inserted into the designated slots on the terminal support.

Figure 13-3 Mounting the terminal support (spring-loaded connection technology in the main circuit)

Disassembly

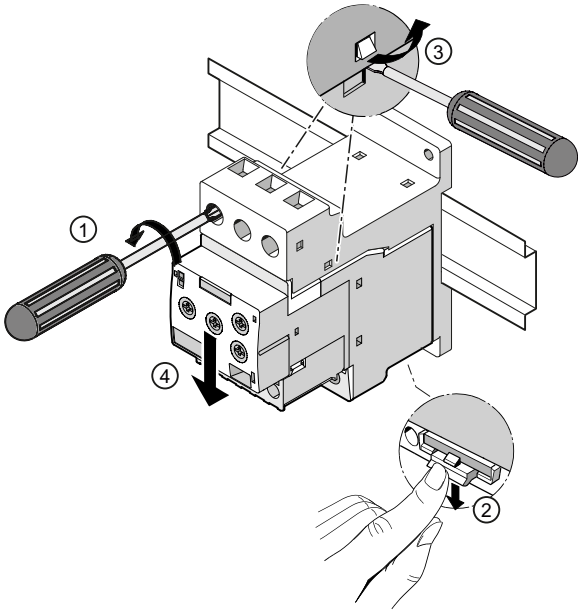

① Undo the screws on the main conductor terminals.
② Release the current monitoring relay by pushing down the clip on the underside of the terminal support.
③ Use a screwdriver to dislodge the terminal support from the current monitoring relay.
④ Pull the current monitoring relay down and away from the contactor.

Figure 13-4 Removing the terminal support (screw-type connection technology in the main circuit)

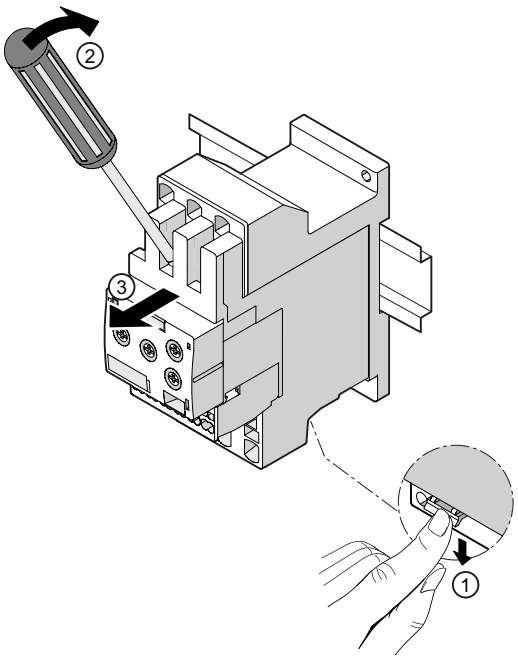

① Release the current monitoring relay by pushing down the clip on the underside of the terminal support.

② Position the screwdriver on the terminal support as shown in the figure. Carefully dislodge the current monitoring relay from the contactor.

③ Pull the current monitoring relay toward you and away from the terminal support.

Figure 13-5 Removing the terminal support (spring-loaded connection technology in the main circuit)

13.2 Accessories for 3UG4 monitoring relays

13.2.1 Sealable cover

Description

There is a uniform sealable cover for the monitoring relays with an overall width of 22.5 mm.

The sealable cover can be used to secure the actuators (rotary buttons, sliding switches, and keys) of the monitoring relays against unauthorized or unintentional manipulation.

Siemens also offers a sealable membrane (3TK2820-0AA00) for securing the monitoring relays with analog setting. The sealable membrane is affixed to the front of the device and secures rotary buttons and sliding switches against unintentional manipulation.

Note

The sealable membrane does not protect keys against unauthorized or unintentional manipulation.

Mounting

The figure below shows how to attach the 3RP1902 sealable cover to the monitoring relay.

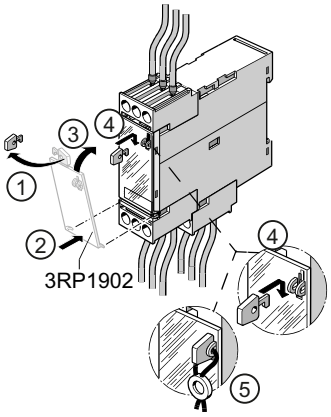

① Break off the clip on the sealable cover.
② Insert the sealable cover into the openings on the monitoring relay.
③ Fold up the sealable cover.
④ Insert the clip into the opening until it engages.
⑤ Seal the clip to secure it against unauthorized removal.

Figure 13-6 Mounting the sealable cover on the monitoring relay

13.2.2 Push-in lugs

Description

The 3RP1903 push-in lugs are available for the monitoring relays.

With the help of the push-in lugs, the monitoring relays can be secured with screws on a level surface (e.g. a wall). Two push-in lugs are required per device.

Mounting

The figure below shows how to attach the 3RP1903 push-in lugs to the monitoring relay.

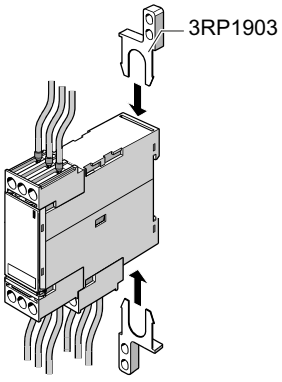

① Insert the push-in lugs at the top and bottom on the monitoring relay and tighten the push-in lugs with a screwdriver.

Figure 13-7 Attaching the push-in lugs on the monitoring relay

13.2.3 Probes for the 3UG4501 monitoring relay

Note

Probes for level monitoring

Probes for level monitoring are available from various suppliers.
We recommend probes from Jacob GmbH (https://www.jacob-gmbh.de/en/).
There you can also obtain the previous 3UG3 wire electrodes and bow electrodes.

13.2.4 Summation current transformer for the 3UG4624 monitoring relay

Description

The 3UL22 summation current transformers acquire residual current in machines and plants. Together with the 3UG4624 residual current monitoring relay or the motor management and control unit SIMOCODE 3UF, residual current monitoring and ground-fault monitoring are possible. The 3UL22 summation current transformer is available in three sizes with a bushing opening of Ø 40 mm, Ø 65 mm and Ø 120 mm.

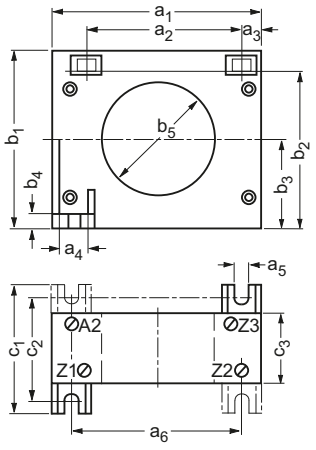

Figure 13-8 3UL22 summation current transformers

Type	a_1	a_2	a_3	a_4	a_5	a_6	b_1	b_2	b_3	b_4	b_5	c_1	c_2	c_3
3UL2201	100	75	10	15	for M4	80	85	72,5	42,5	7,5	40	65	50	40
3UL2202	125	95	10	15	for M4	100	110	97,5	55	7,5	65	70	60	45
3UL2203	200	165	20	20	for M4	170	200	100	100	10	120	85	70	55

Technical data sheet

You can also find the technical data of the product at Siemens Industry Online Support (https://support.industry.siemens.com/cs/ww/en/ps/16367/td).

1. Enter the full article number of the desired device in the "Product" field, and confirm with the Enter key.
2. Click the "Technical data" link.

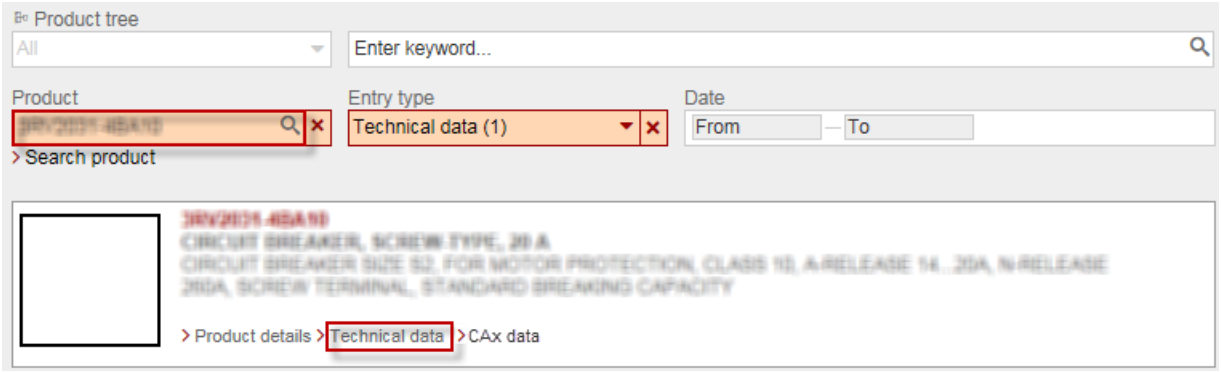

13.2.5 3UL23 residual current transformers for 3UG4625 monitoring relays

Description

3UL23 residual current transformers detect fault currents in machines and systems. Together with the residual current monitoring relay or the 3UF7510 SIMOCODE motor management and control device ground-fault module, residual current monitoring and ground-fault monitoring are possible. The 3UL23 residual current transformer is available in six sizes with bushing opening diameters of ∅ 35 mm, ∅ 55 mm, ∅ 80 mm, ∅ 110 mm, ∅ 140 mm, and ∅ 210 mm.

13.2.5.1 General information

Various circuit types with resulting fault currents

The following table shows various circuit types and the resulting fault currents in the event of a ground fault. Circuits 1 to 6 create pure AC fault currents or AC fault currents with a pulsating direct fault current component. This type of fault current can be detected by type A transformers in accordance with DIN VDE 0100-530, such as 3UL23 residual current transformers.

Note

3UG4.25 residual current monitoring relays are only suitable for use with 3UL23 residual current transformers.

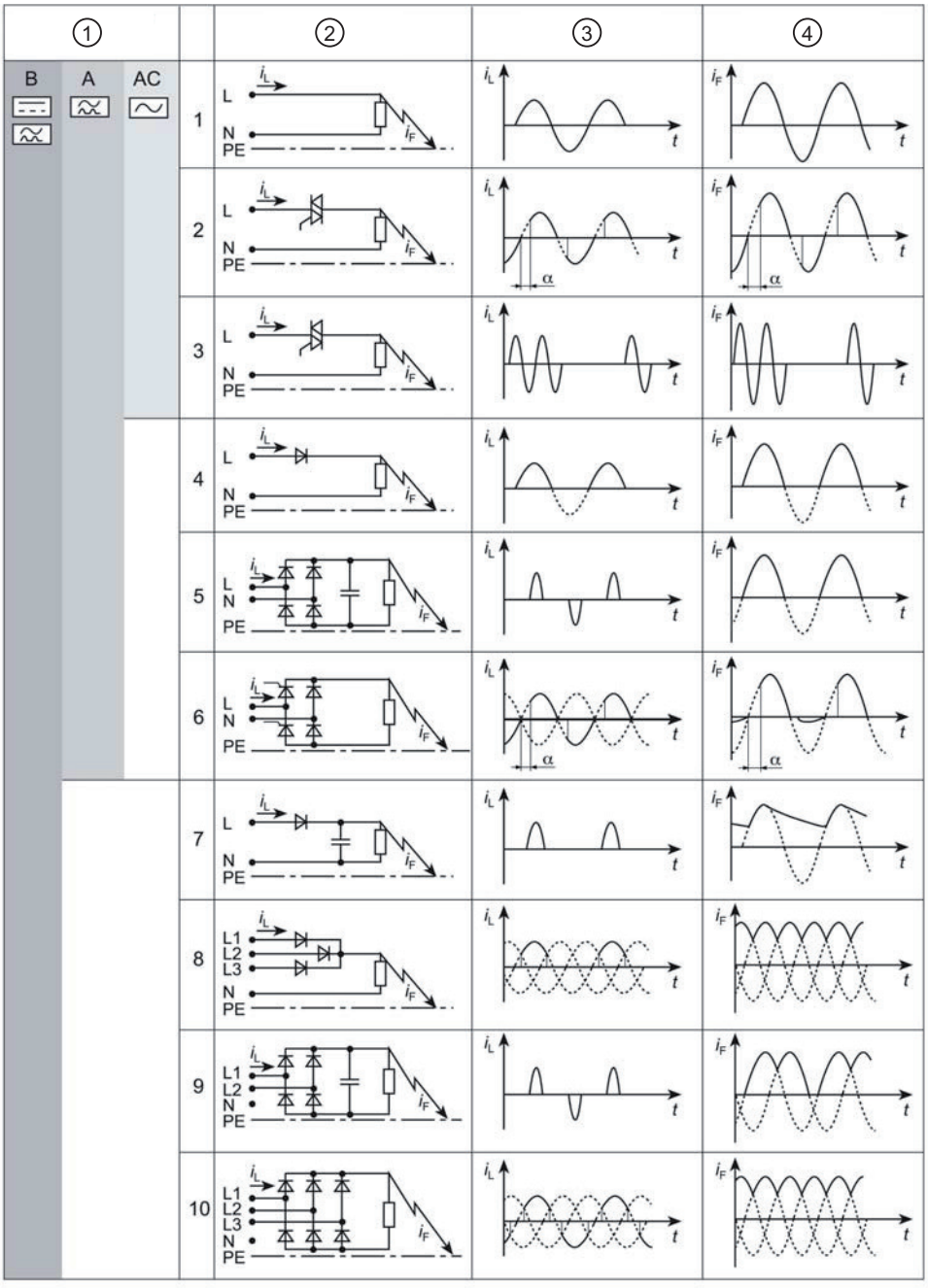

① Suitable FI type
② Circuit
③ Load current
④ Fault current

Figure 13-9 Possible fault current forms and suitable residual current devices

More information is available on the Internet (https://www.siemens.com/industrial-controls/support).

13.2.5.2 Installation specifications

Note

Please ensure strict adherence to the installation specifications for live cables.

⚠ WARNING

Open-circuit voltage may result in death, serious injury or material damage

The current transformer output is a constant current power supply. In accordance with U = R * I, the output voltage increases with an increasing resistance. If the connecting terminals of the current transformer are open, the output voltage may become high enough for you to put your life at risk or permanently damage the current transformer.

Avoid operating the unit when open. Operating a network for monitoring safely and without faults requires that the monitoring relay and the 3UL23 residual current transformer have been installed completely. It is absolutely necessary to short-circuit previously installed 3UL23 residual current transformers when the units are not connected to a monitoring relay.

3UL23 residual current transformer conductor cross-sections

In accordance with DIN EN 60204-1 "Safety of machinery", the current carrying capacity of conductors is limited depending on their cross-section. This results in the ideally suitable residual current transformer to be used as per the following table. Please observe potentially deviating, local installation specifications.

Order number	Bushing opening Diameter [mm]	Max. conductor cross-section 3P copper cable + N [mm²]	AWG [kcmil]	Rated current per phase [A]
3UL2302-1A	35	25	4	85
3UL2303-1A	55	50	1 / 0	150
3UL2304-1A	80	150	300	225
3UL2305-1A	110	240	500	400
3UL2306-1A	140	2 x 185	2 x 350/400	500
3UL2307-1A	210	2 x 240	2 x 500	630

3UL23 residual current transformers for external fault current monitoring

All live cables must be routed as close to the center of the transformer as possible. Any neutral conductor must be routed through the transformer. Grounded protective

conductors must not be routed through the transformer or need to be routed through the transformer in both directions.

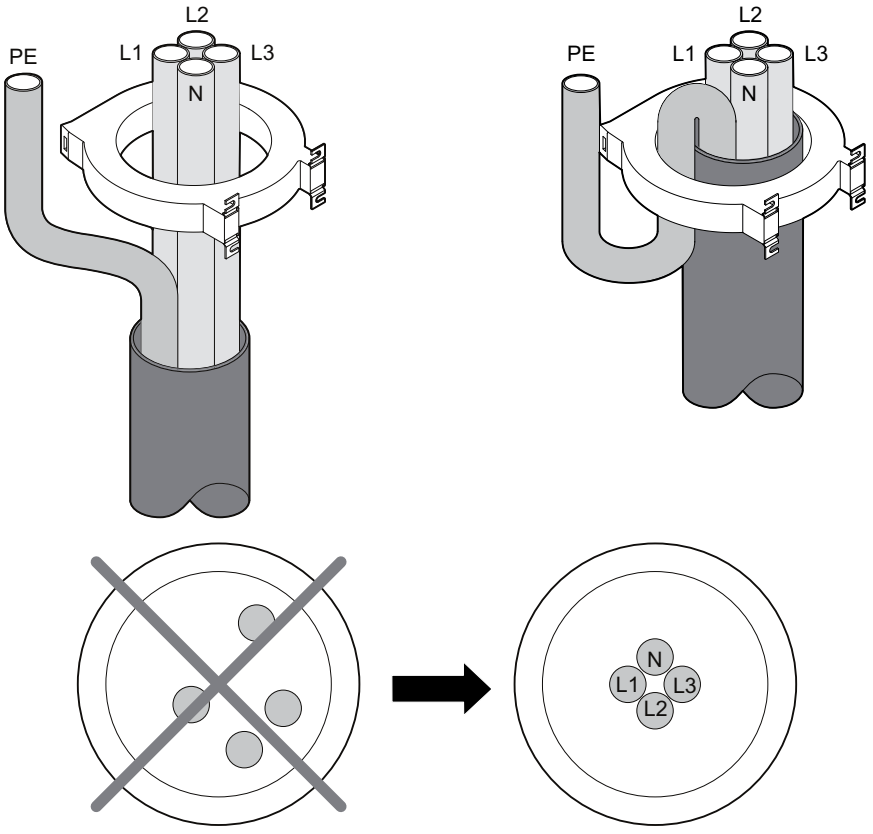

Route power cables around the residual current transformer in a straight line and ensure the area corresponds at minimum to the internal transformer diameter.

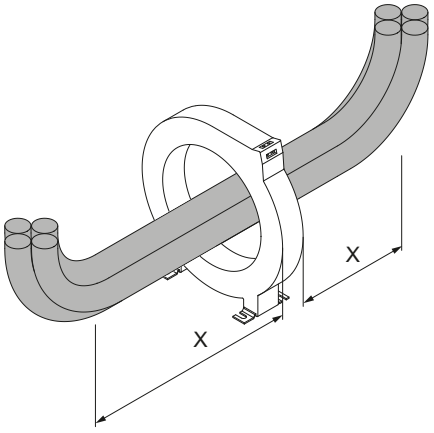

X > Ø residual current transformer

The internal transformer diameter must be at minimum twice the size of the power cable bundle diameter.

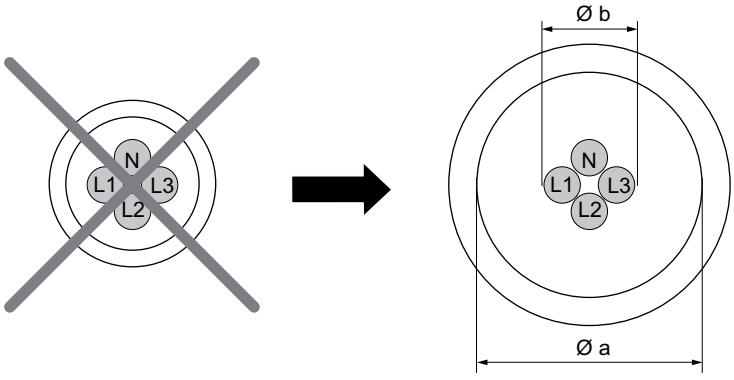

Ø a ≥ 2 x Ø b

Transformer connection

Transformer connecting cables must be twisted and not routed in parallel to live cables to protect from emitted interference. Keep the length of the connecting cables to a minimum. The resistance at the transformer connecting cable must not exceed 5 Ω to ensure correct fault current monitoring. This is ensured by the following limits given here as examples.

Conductor cross-section [mm²]	AWG/[kcmil]	Max. cable length [m]
0.5	20	70
1.0	18	140
1.5	16	210
2.5	14 / 12	300
4.0[1)]	10	550

1) only possible in the case of transformers with a 210 mm diameter

Note

We recommend using twisted cables.

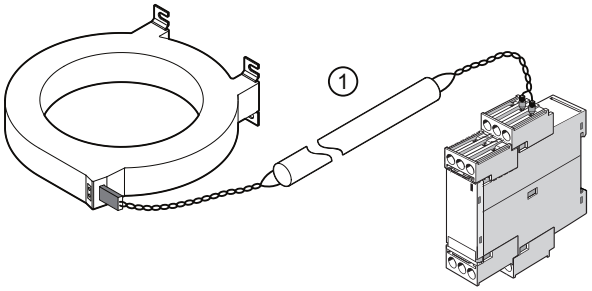

Figure 13-10 ① Maximum cable lengths (see table above)

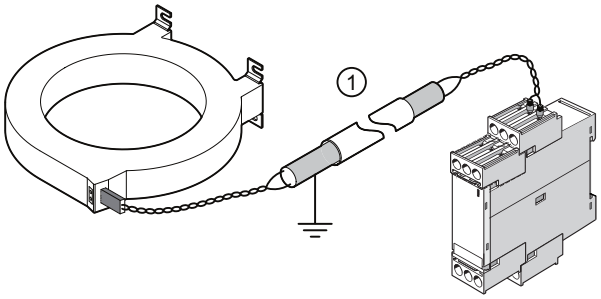

Figure 13-11 ① Length ≥ 10 m (shielded, twisted, grounded cables)

Note

Use shielded, twisted, and grounded cables for transformer connecting cables with a length of more than 10 m.

13.2.5.3 Potential for optimization

Potential for optimization in the event of extremely high currents, false tripping due to high starting currents or in environments with high EMC interference

1. Extend the ON-delay time to fade out fault currents measured during motor startup.
2. Extend the tripping delay time to prevent false tripping due to EMC interference.
3. Select a residual current transformer with a larger internal diameter. The reduced magnetic field strength that passes through the transformer due to the extended distance between power cables and transformer reduces the measuring accuracy but also the susceptibility to interference.

4. Route the transformer connecting cables at a greater distance to live cables
5. a) Using solid shield sleeves or wound shield sleeves made of soft iron sheet metal may be advisable to be able to monitor for small fault currents at extremely high rated currents. We recommend using a soft iron sheet metal shield with a thickness of 0.1 mm at minimum and fold it around the cable bundle several times so that the overall shield is 1 mm at minimum. The shielding sleeve length (L) must correspond to the internal diameter of the transformer used.

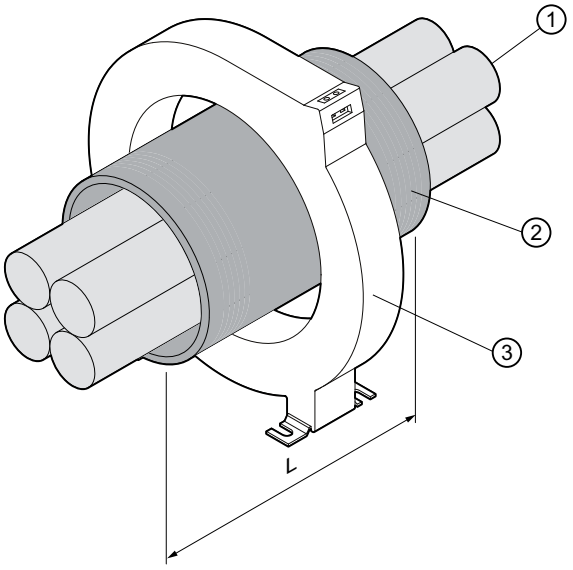

① Phase (and neutral conductor)
② Shield sleeve
③ Residual current transformer

b) A solid shield sleeve, e.g. turned from a normal, low-carbon tool steel must be precisely in contact with the internal ring of the residual current transformer. The wall thickness of the sleeve must be 1 mm at minimum, the length of the sleeve (L) must correspond to the internal diameter of the transformer used.

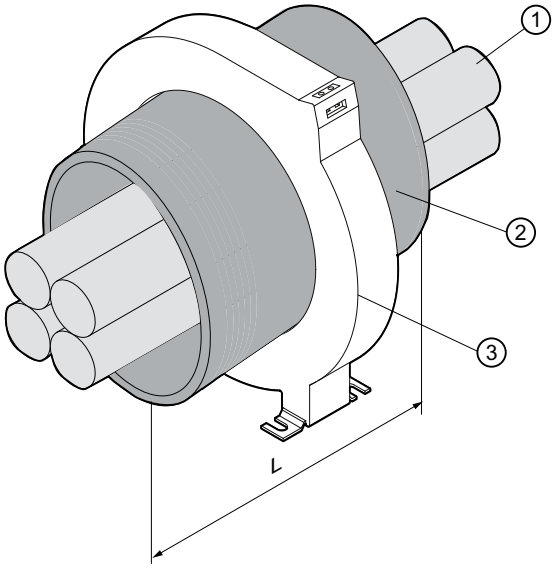

① Phase (and neutral conductor)
② Shield sleeve
③ Residual current transformer

13.2.5.4 Installation faults

For reasons of clarity, the representations show only the residual current transformer with the currents passing through it rather than the complete residual current monitoring unit and residual current transformer. If the vectorial sum of the currents passing through the residual current transformer does not equal zero, part of the current is bypassing the transformer to ground and the residual current monitoring relay triggers a warning or an alarm if the current is correspondingly high.

In some instances, false alarms may occur for no apparent reason. However, these represent installation faults.

The following examples demonstrate the most common installation faults.

Parallel connections of conductors

If several residual current monitoring relays are installed in one network, a conductor routed through several residual current transformers must not be connected to itself downstream of the transformer, as this would effectively represent a parallel connection of the conductor. This fault occurs particularly often with neutral conductors. This fault causes the currents to be distributed across the conductor. This means that the current flowing through the load to be monitored is no longer 100 % of the total current and all integrated monitoring relays measure fault currents.

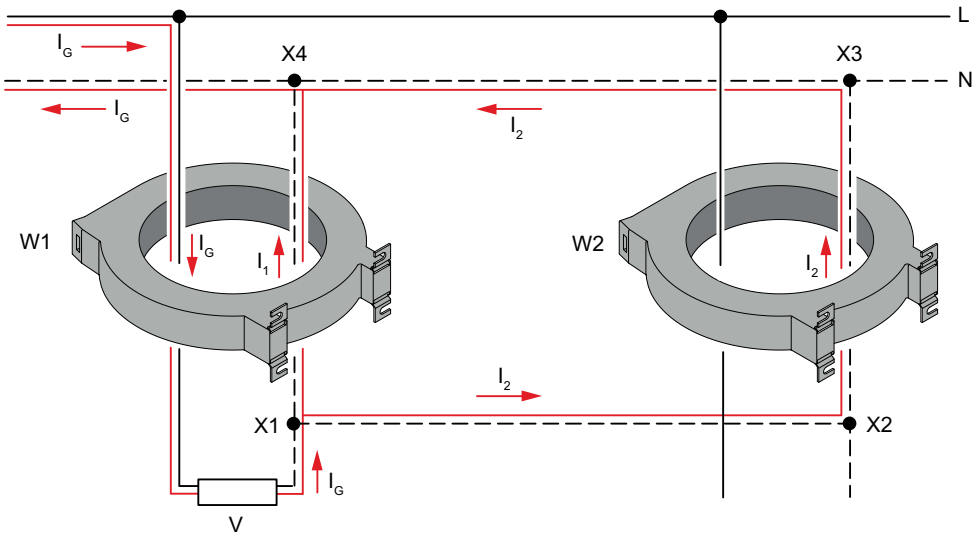

Mixing up conductors

In a network with several loads there is the risk that active conductors of loads that are to be separately monitored for fault currents can get mixed up. This fault leads to false tripping as the inflowing and outflowing currents are not always exactly the same strength, even if the loads are identical.

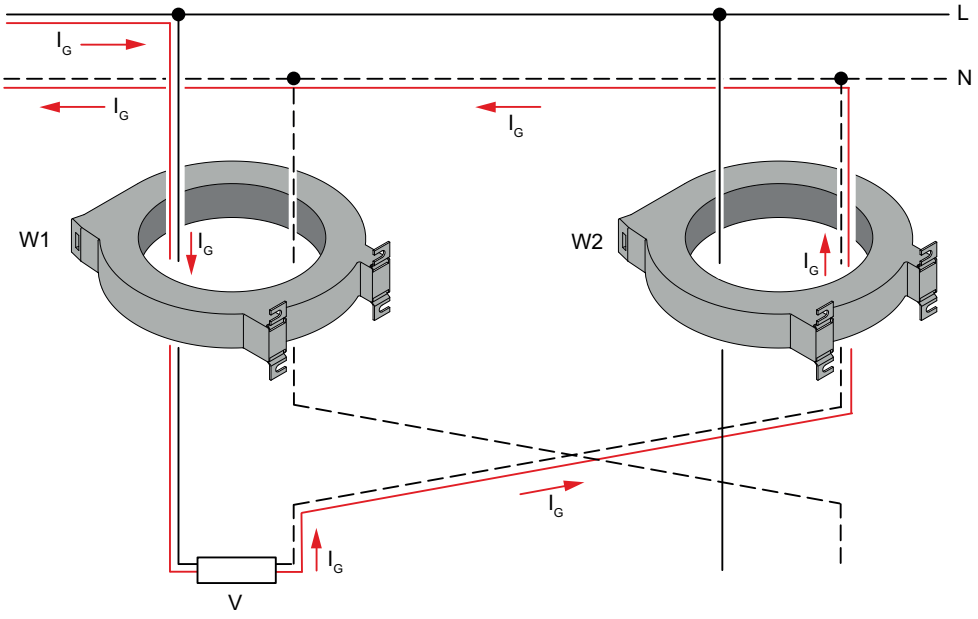

Routing contrary to the current flow

To be able to form the vectorial sum of currents to and from a load correctly, all active conductors must be routed through the residual current transformer from the same direction. Due to the restricted space in a control cabinet it may be easier to route the neutral conductor through the transformer in the opposite direction to the phase conductor. This means the vectorial sum of currents does not equal zero, even without a ground fault, and the residual current monitoring relay trips.

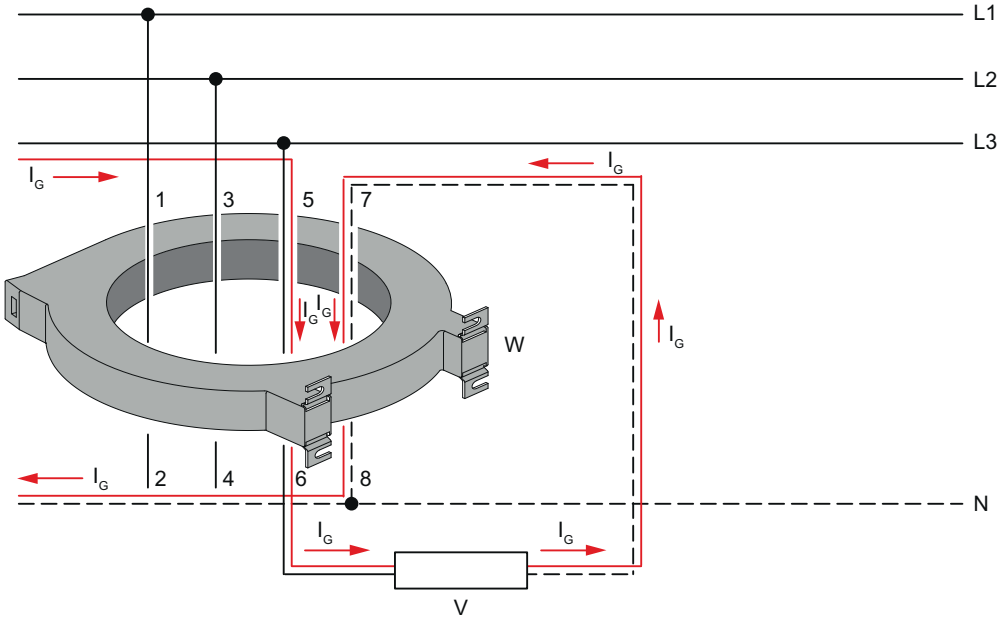

13.2.5.5 Internal circuit diagram

3UL23 internal circuit diagram

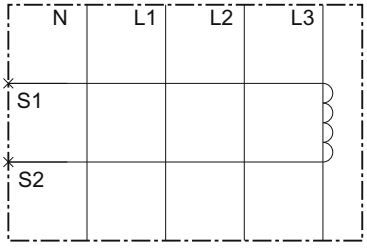

Figure 13-12 3UL23 residual current transformer

13.2.5.6 Installing

Wall mounting procedure

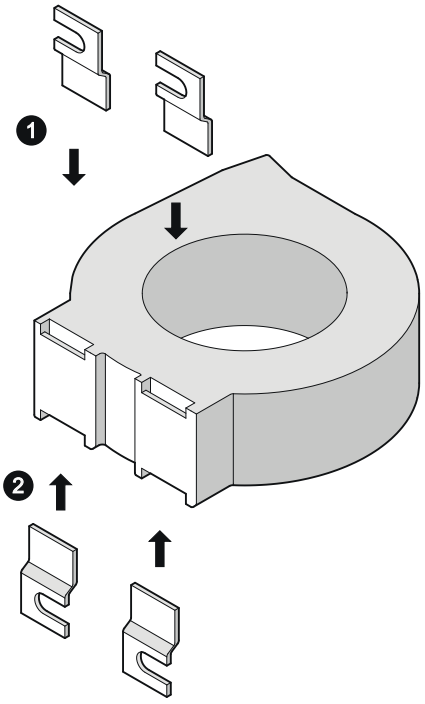

① / ② Insert the fixing lugs into the designated openings in the unit until they reach the stop.

③ Place the device against the wall surface prepared for establishing a screw connection.

④ Insert the head screws through the corresponding elongated holes in the fixing lugs.

⑤ Screw the device onto the level surface so that it is secure.

Mounting onto standard rail

Requirement: At the installation location, a horizontal 35-mm wide mounting rail in accordance with DIN EN 60715 has been properly secured.

Mounting onto standard rail is possible with residual-current transformers with bushing opening diameters of up to ∅ 55 mm only (3UL2302-1A, 3UL2303-1A).

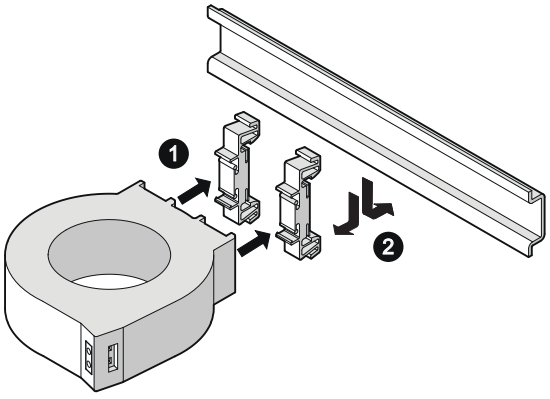

① Mount the holder (3UL2900) to the device.
② Mount the device on the rail.

Technical data sheet

You can also find the technical data of the product at Siemens Industry Online Support (https://support.industry.siemens.com/cs/ww/en/ps/16367/td).

1. Enter the full article number of the desired device in the "Product" field, and confirm with the Enter key.
2. Click the "Technical data" link.

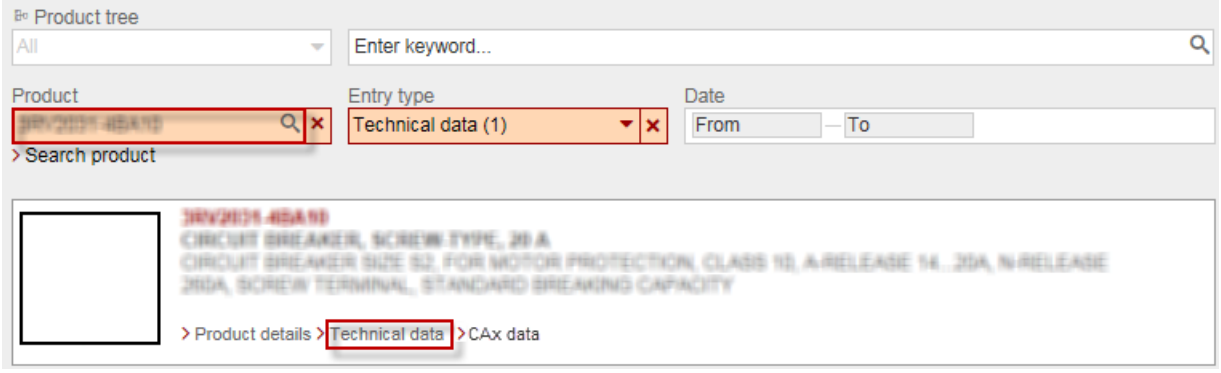

13.2.5.7 Dimension drawings

3UL23 residual current transformer

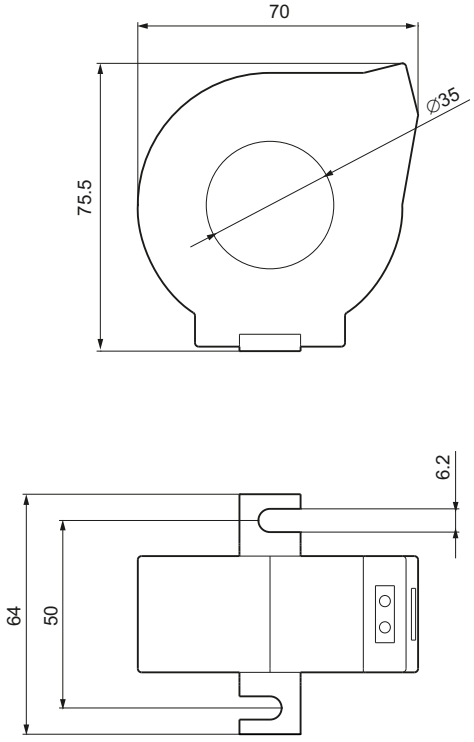

Figure 13-13 3UL2302-1A

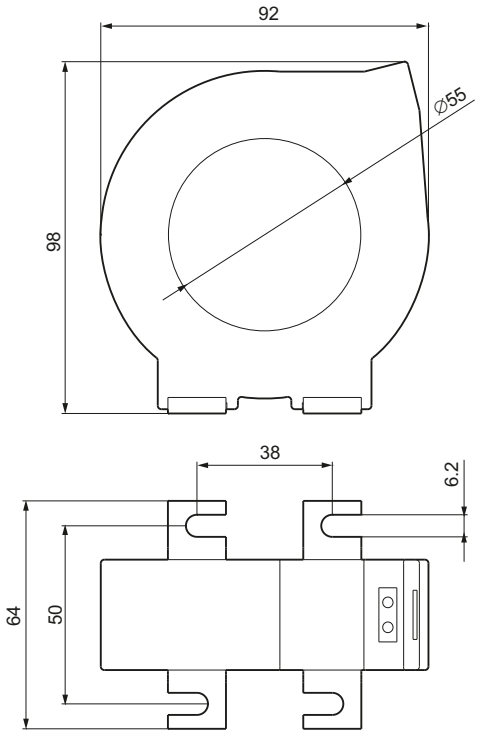

Figure 13-14 3UL2303-1A

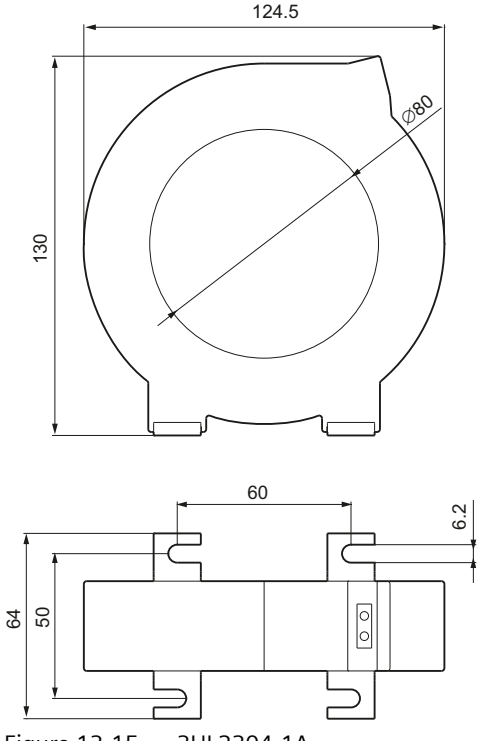

Figure 13-15 3UL2304-1A

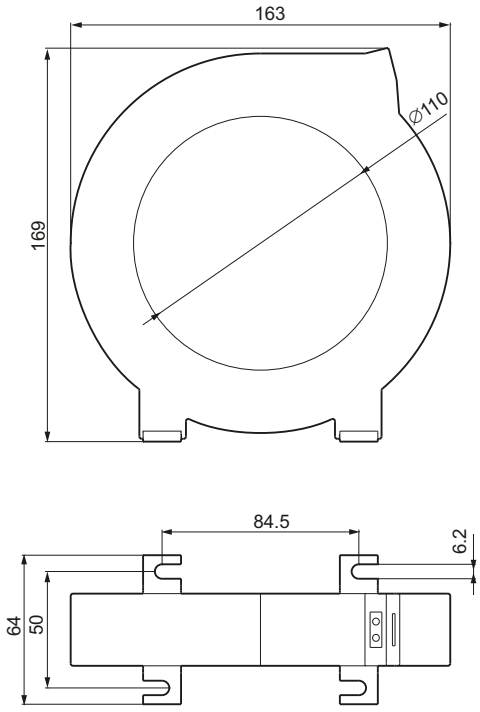

Figure 13-16 3UL2305-1A

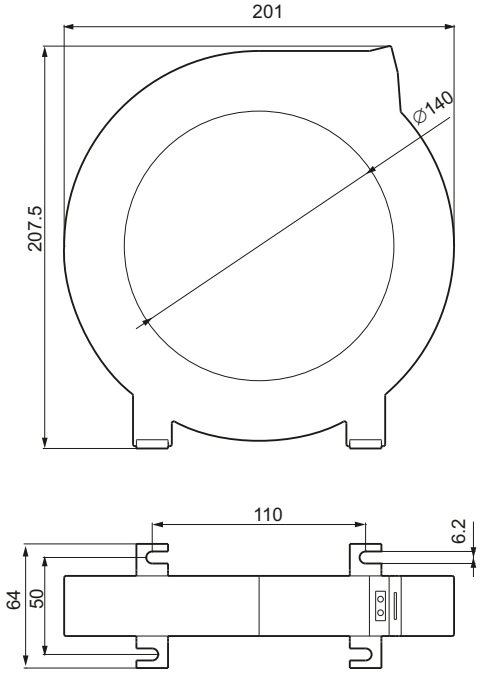

Figure 13-17 3UL2306-1A

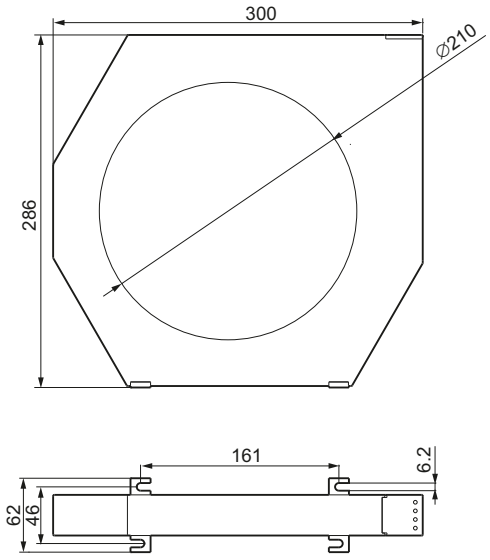

Figure 13-18 3UL2307-1A

13.3 Accessories for 3UG458.-1AW30 / 3UG4583-1CW30 insulation monitoring relays

13.3.1 Sealable cover

Description

A sealable cover compatible is available for the 3UG458. insulation monitoring relays.

Table 13-2 Versions of the sealable cover

Sealable cover	Usability
3UG4981-0C	3UG4581-1AW30/3UG4582-1AW30
3UG4983-0C	3UG4583-1CW30

The sealable cover can be used to secure the actuators (rotary buttons and sliding switches) of the monitoring relays against unauthorized or unintentional manipulation.

Siemens also offers a sealable membrane (3TK2820-0AA00) with a width of 22.5 mm for securing the monitoring relays. The sealable membrane is affixed to the front of the device and secures rotary buttons and sliding switches against unintentional operation.

Mounting

The figure below shows how to attach the 3UG4983-0C sealable cover to the 3UG4583 insulation monitoring relay.

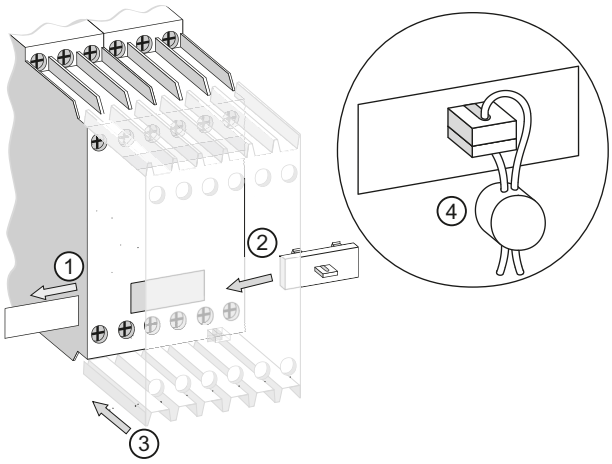

① Remove the label from the monitoring relay
② Insert the clip into the opening on the device until it engages.
③ Slide the sealable cover onto the monitoring relay.
④ Secure the sealable cover against unauthorized removal with a seal on the clip.

Figure 13-19 Mounting the sealable cover on the monitoring relay

13.3.2 3UG4983 voltage reducer module for the 3UG4583-1CW30 monitoring relay

Description

The 3UG4983-1A passive voltage reducer module is used for extending the measuring range of the 3UG4583 insulation monitoring relays. The voltage reducer module enables monitoring of the insulation resistance in systems with rated line voltages of up to 690 V AC (15 to 400 Hz) and 1000 V DC in accordance with IEC 61557-8. The device does not require any rated control supply voltage for operation, and it is connected between the 3UG4583 insulation monitoring relay and the system to be monitored.

Note

If the continuously present voltage is greater than 600 V, a minimum gap of 10 mm must be maintained between the neighboring devices.

Front view/terminal labeling 3UG4983

Front view	Description	
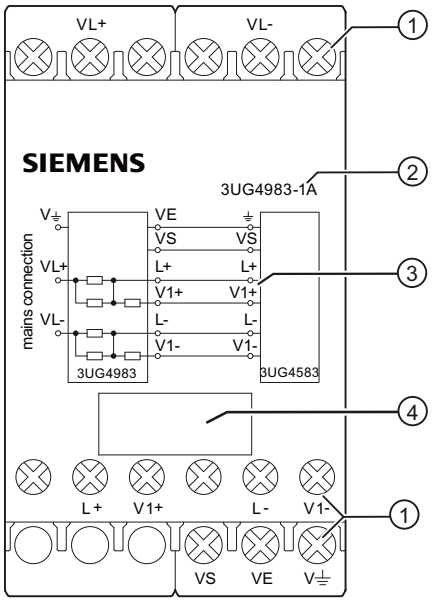	**Position digits**	
	①	Terminal block: Screw-type connections are possible.
	②	Device article number
	③	Circuit diagram
	④	Label
	Terminal labels	
	VL+	Measuring signal input, connection to the system
	VL-	Measuring signal input, connection to the system
	VS	Connection to 3UG4583 terminal VS
	VE	Connection to 3UG4583 terminal ⏚
	V⏚	Measuring signal input, ground connection
	L+	Connection to 3UG4583 terminal L+
	L-	Connection to 3UG4583 terminal L-
	V1+	Connection to 3UG4583 terminal V1+
	V1-	Connection to 3UG4583 terminal V1-

Mounting onto standard rail

The figure below shows how to install the 3UG4983 voltage reducer module on a standard rail.

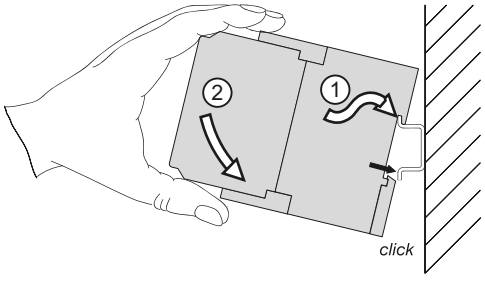

① / ② Position the device on the top edge of the DIN rail and press it down until it snaps onto the bottom edge of the DIN rail.

Figure 13-20 Installing the 3UG4983 voltage reducer module (mounting onto standard rail)

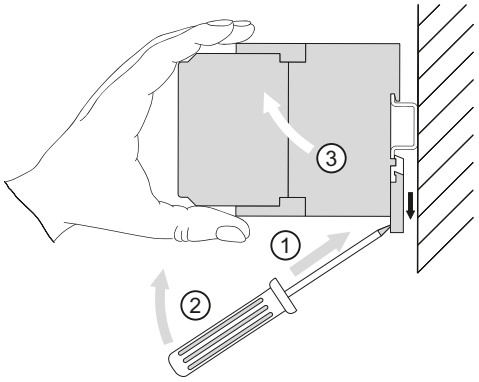

① / ② To remove, apply the screwdriver to the device and push it up with a twisting motion against the tension of the fixing spring.

③ Swing the device upwards to remove it.

Figure 13-21 Removing the 3UG4983 voltage reducer module (mounting onto DIN rail)

13.3.2.1 Internal circuit diagrams

Internal circuit diagram 3UG4983-1A / 3UG4983-.AA01

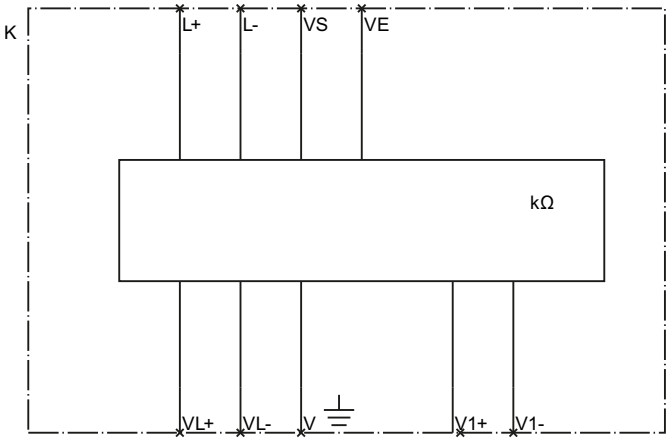

Figure 13-22 3UG4983-1A / 3UG4983-.AA01 insulation monitoring relay

Wiring examples for the 3UG4583 insulation monitoring relay with connected 3UG4983 upstream module

Measuring inputs L+ and L- can be connected to any conductor. Measuring inputs L+ and L- must always be connected to different conductors.

The rated system voltage is $U_n \leq 690$ V AC (15 to 400 Hz) or $U_n \leq 1000$ V DC.

2-wire AC system / 2-wire DC system

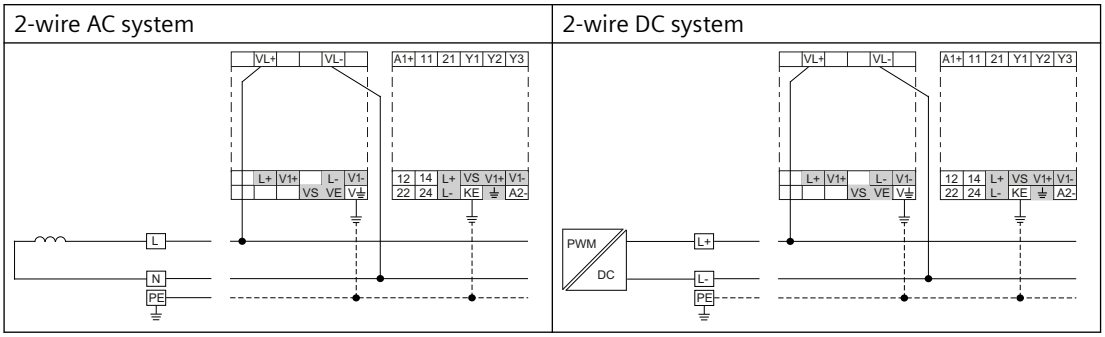

3-wire AC system / 3-wire DC system

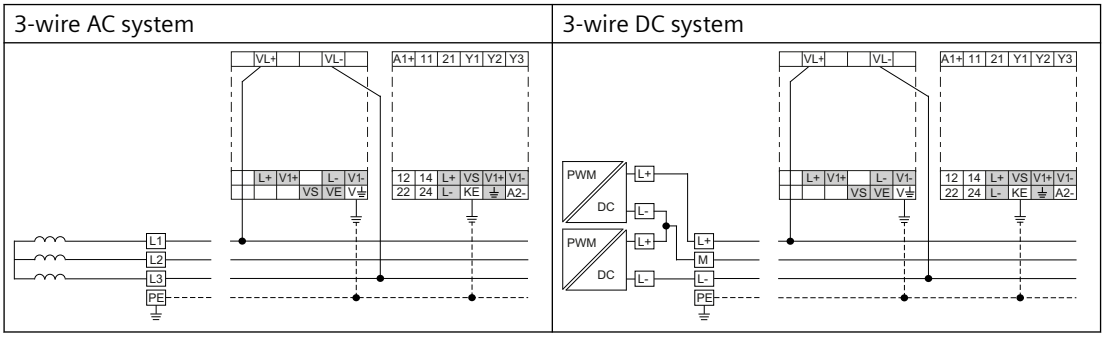

4-wire AC system

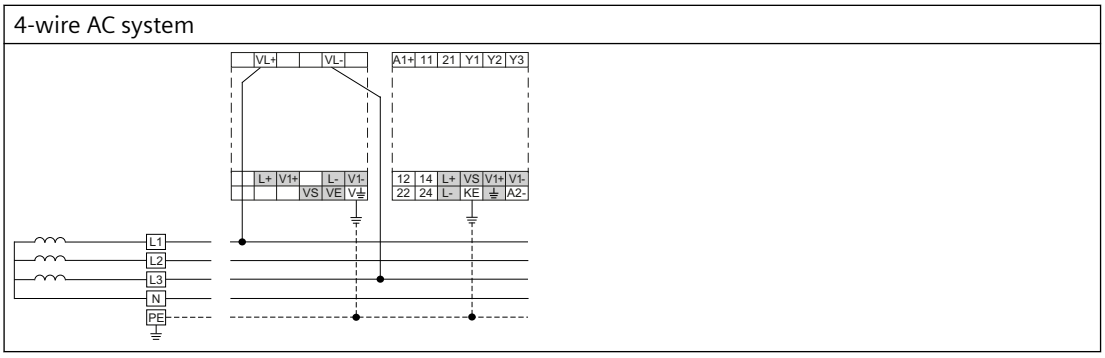

Application example

The figure below shows how to connect the 3UG4983 upstream module to the 3UG4583 insulation monitoring relay.

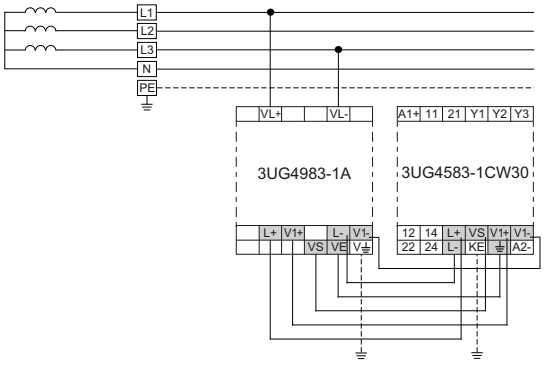

Figure 13-23 Connection example: Upstream module - insulation monitoring relay

Note

The maximum cable length between the 3UG4583 insulation monitoring relay and the 3UG4983 upstream module is 0.4 m.

Note

The maximum cable length of the measuring circuit connections is 50 m or 100 pF/m.

13.3.2.2 Technical data

Technical data sheet

You can also find the technical data of the product at Siemens Industry Online Support (https://support.industry.siemens.com/cs/ww/en/ps/16367/td).

1. Enter the full article number of the desired device in the "Product" field, and confirm with the Enter key.
2. Click the "Technical data" link.

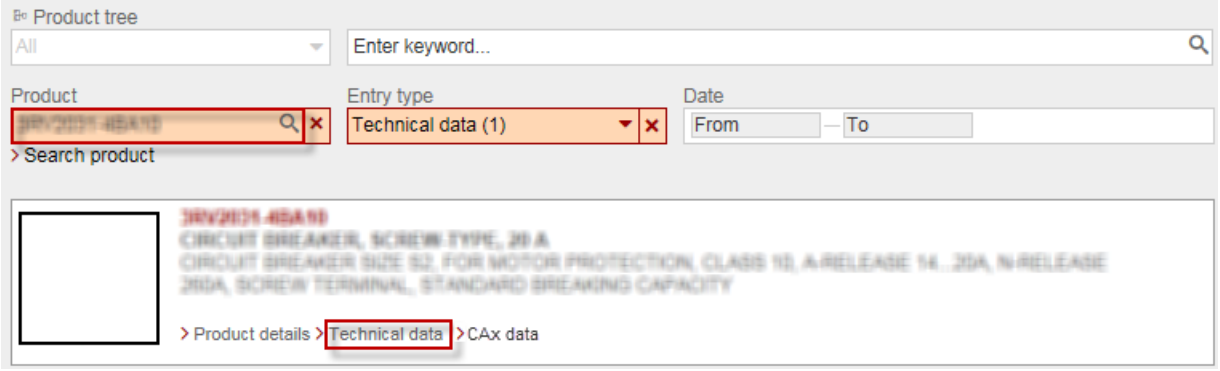

13.4 Accessories for 3UG4583-1CW31 insulation monitoring relays

13.4.1 3UG4983-.AA01 voltage reducer module for the 3UG4583-1CW31 monitoring relay

Description

The 3UG4983-1AA01 passive voltage reducer module is used for extending the measuring range of the 3UG4583 insulation monitoring relays. The voltage reducer module enables monitoring of the insulation resistance in systems with rated line voltages of up to 690 V AC (15 to 400 Hz) and 1000 V DC in accordance with IEC 61557-8. The device does not require any rated control supply voltage for operation, and it is connected between the 3UG4583 insulation monitoring relay and the system to be monitored.

Note

If the continuously present voltage is greater than 600 V, a minimum gap of 10 mm must be maintained between the neighboring devices.

Front view/terminal labeling 3UG4983-1AA01

Front view	Description	
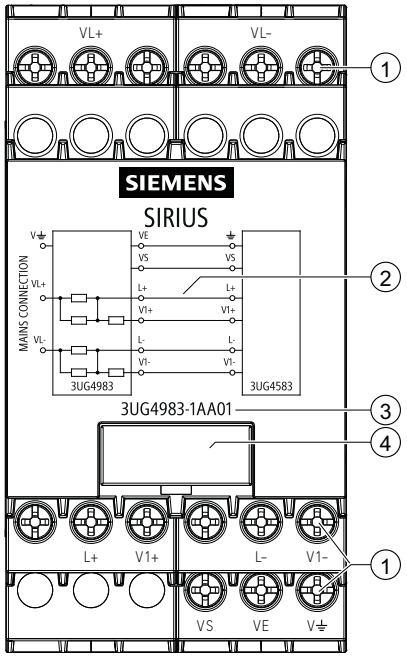	**Position digits**	
	①	Terminal block: Screw-type connections are possible.
	②	Circuit diagram
	③	Device article number
	④	Label
	Terminal labels	
	VL+	Measuring signal input, connection to the system
	VL-	Measuring signal input, connection to the system
	VS	Connection to 3UG4583 terminal VS
	VE	Connection to 3UG4583 terminal ⏚
	V⏚	Measuring signal input, ground connection
	L+	Connection to 3UG4583 terminal L+
	L-	Connection to 3UG4583 terminal L-
	V1+	Connection to 3UG4583 terminal V1+
	V1-	Connection to 3UG4583 terminal V1-

Description

The 3UG4983-2AA01 passive voltage reducer module is used for extending the measuring range of the 3UG4583 insulation monitoring relays. The voltage reducer module enables monitoring of the insulation resistance in systems with rated line voltages of up to 690 V AC (15 to 400 Hz) and 1000 V DC in accordance with IEC 61557-8. The device does not require any rated control supply voltage for operation, and it is connected between the 3UG4583 insulation monitoring relay and the system to be monitored.

Note

If the continuously present voltage is greater than 600 V, a minimum gap of 10 mm must be maintained between the neighboring devices.

Front view/terminal labeling 3UG4983-2AA01

Front view	Description	
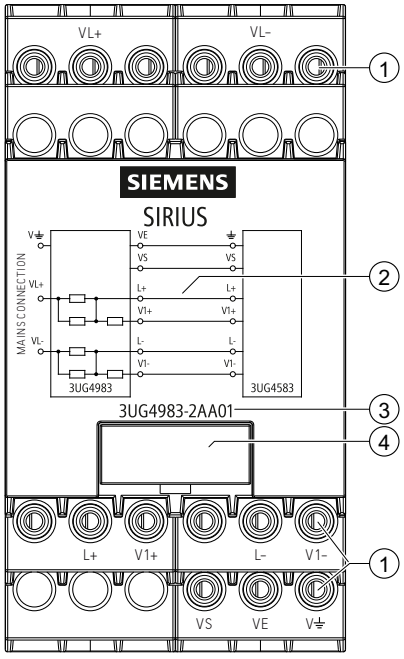	**Position digits**	
	①	Terminal block: Supports spring-loaded connection technology.
	②	Circuit diagram
	③	Device article number
	④	Label
	Terminal labels	
	VL+	Measuring signal input, connection to the system
	VL-	Measuring signal input, connection to the system
	VS	Connection to 3UG4583 terminal VS
	VE	Connection to 3UG4583 terminal ⏚
	V⏚	Measuring signal input, ground connection
	L+	Connection to 3UG4583 terminal L+
	L-	Connection to 3UG4583 terminal L-
	V1+	Connection to 3UG4583 terminal V1+
	V1-	Connection to 3UG4583 terminal V1-

Mounting onto standard rail

The figure below shows how to install the 3UG4983-.AA01 voltage reducer module on a standard rail

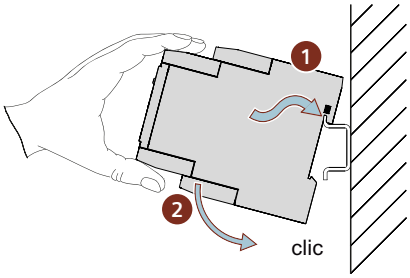

① Position the device on the top edge of the DIN rail and press it down until it snaps onto the bottom
② edge of the DIN rail.

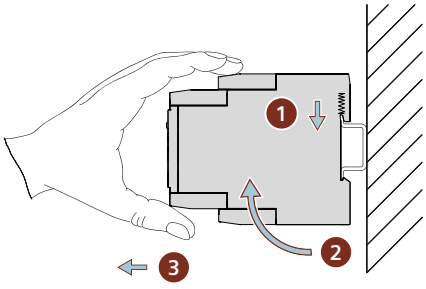

① For disassembly, press the device down and remove the device with a swiveling motion to the
② front.
③

13.4.1.1 Internal circuit diagrams

Internal circuit diagram 3UG4983-1A / 3UG4983-.AA01

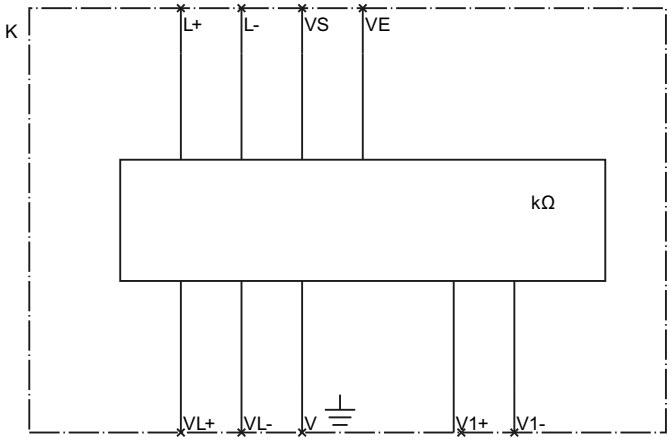

Figure 13-24 3UG4983-1A / 3UG4983-.AA01 insulation monitoring relay

13.4.1.2 Typical circuit diagrams (3UG4983-.AA01)

Typical circuit diagrams 3UG4583-.CW31 insulation monitoring relay with connected 3UG4983-.AA01 voltage reducer module

Measuring inputs L+ and L- can be connected to any conductor. Measuring inputs L+ and L- must always be connected to different conductors.

The rated system voltage is $U_n \leq 690$ V AC (15 to 400 Hz) or $U_n \leq 1000$ V DC.

2-wire AC system / 2-wire DC system

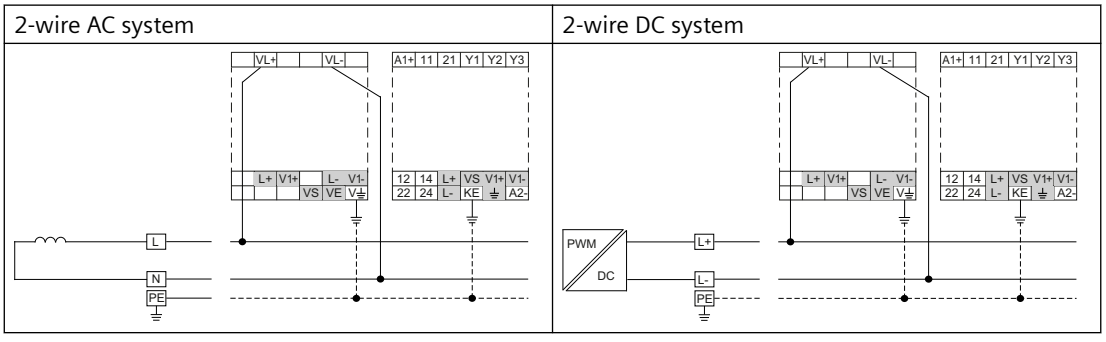

3-wire AC system/3-wire DC system

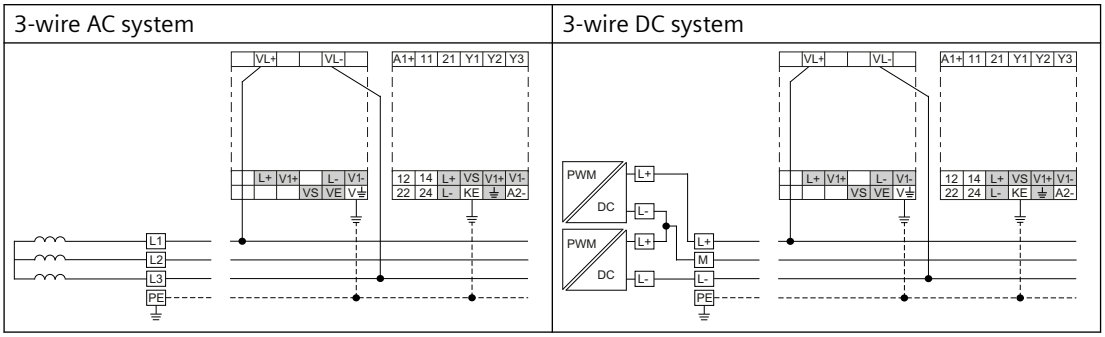

4-wire AC system

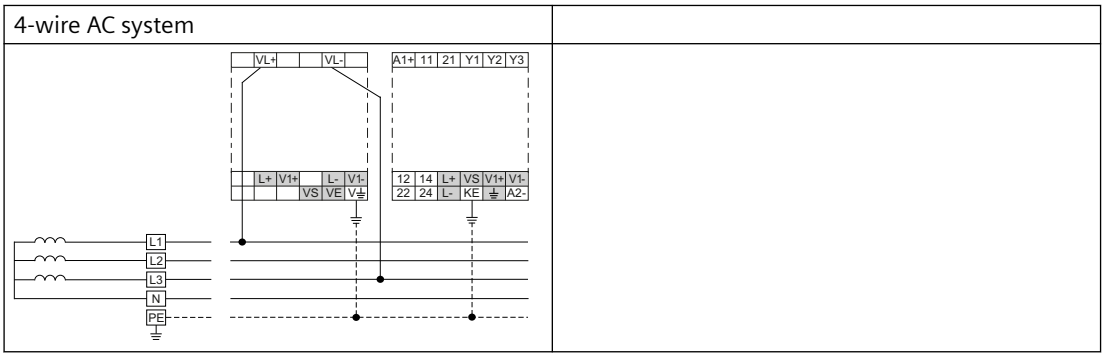

Application example

The figure below shows the connection of the 3UG4983-.AA01 voltage reducer module to the 3UG4583-.CW31 insulation monitoring relay

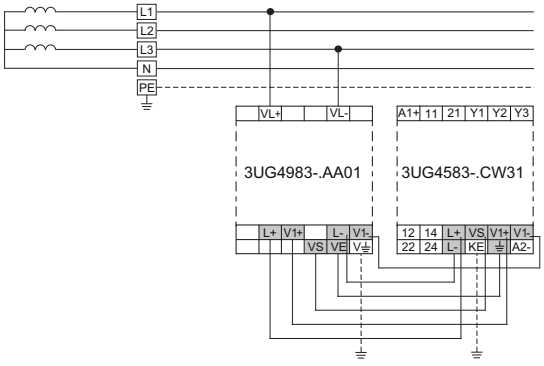

Figure 13-25 Connection example: Voltage reducer module - insulation monitoring relay

Note

The maximum cable length between the 3UG4583-.CW31 insulation monitoring relay and the 3UG4983-.AA01 voltage reducer module is 0.4 m.

Note

The maximum cable length of the measuring circuit connections is 50 m or 100 pF/m.

13.4.1.3 Technical specifications

Technical data sheet

You can also find the technical data of the product at Siemens Industry Online Support (https://support.industry.siemens.com/cs/ww/en/ps/16367/td).

1. Enter the full article number of the desired device in the "Product" field, and confirm with the Enter key.
2. Click the "Technical data" link.

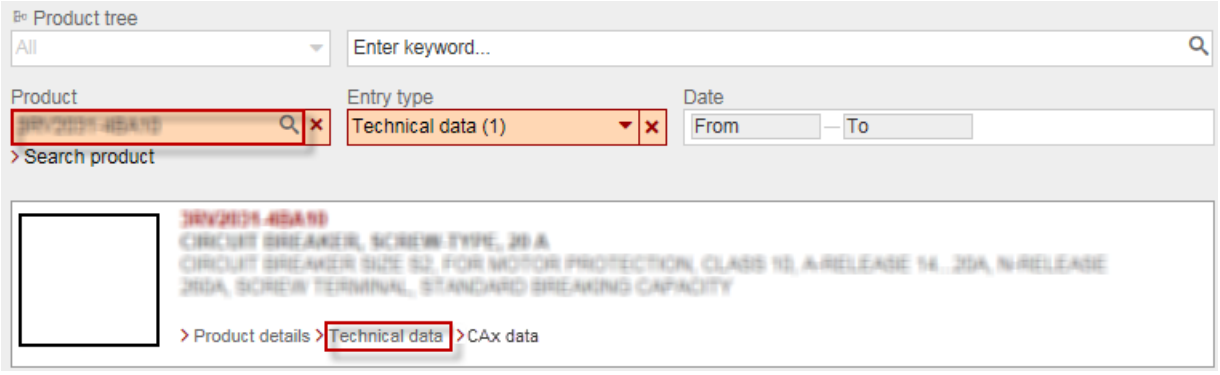

References

A

Further references

You will find further information on the 3RR2 and 3UG4 monitoring relays on the Internet (http://support.automation.siemens.com/WW/view/en/20356134/133300).

In addition to this manual, please refer to the operating instructions and manuals for any accessories. You can download the relevant documentation from the Internet (http://www.siemens.com/sirius/manuals). Simply enter the article number of the relevant item into the search field.

Operating instructions

Title	Article number
SIRIUS monitoring relay for polyphase current monitoring S00 / S0 (3RR21)	3ZX1012-0RR21-1AA1
SIRIUS monitoring relay for polyphase current monitoring S2 (3RR2143)	3ZX1012-0RR21-4AA1
SIRIUS monitoring relay for polyphase current monitoring S00 / S0 (3RR22)	3ZX1012-0RR22-1AA1
SIRIUS monitoring relay for polyphase current monitoring S2 (3RR2243)	3ZX1012-0RR22-4AA1
SIRIUS monitoring relay for level monitoring of conductive liquids (3UG4501)	3ZX1012-0UG45-0BA1
SIRIUS monitoring relay for phase sequence monitoring (3UG4511)	3ZX1012-0UG45-3AA1
SIRIUS monitoring relay for phase sequence and phase failure monitoring (3UG4512)	3ZX1012-0UG45-2AA1
SIRIUS monitoring relay for phase sequence and undervoltage monitoring (3UG4513)	3ZX1012-0UG45-1AA1
SIRIUS monitoring relay for phase sequence, asymmetry, and undervoltage monitoring (3UG4614)	3ZX1012-0UG46-6AA1
SIRIUS monitoring relay for three-phase line monitoring (3UG4615 and 3UG4616)	3ZX1012-0UG46-1AA1
SIRIUS monitoring relay for three-phase line monitoring with phase correction (3UG4617 and 3UG4618)	3ZX1012-0UG46-3AA1
SIRIUS monitoring relay for single-phase current monitoring (3UG4621 and 3UG4622)	3ZX1012-0UG46-2AA1
SIRIUS monitoring relay for residual current monitoring, with transformer 3UL22 (3UG4624)	3ZX1012-0UG46-2BA1
SIRIUS monitoring relay for residual current monitoring, with 3UL23 (3UG4625) transformer	3ZX1012-0UG40-0AA0
SIRIUS monitoring relay for single-phase voltage monitoring (3UG4631 and 3UG4632)	3ZX1012-0UG46-5AA1
SIRIUS monitoring relay for single-phase voltage monitoring, self-powered (3UG4633)	3ZX1012-0UG46-4AA1

Title	Article number
SIRIUS monitoring relay for power factor and active current monitoring (3UG4641)	3ZX1012-0UG46-4BA1
SIRIUS monitoring relay for speed monitoring (3UG4651)	3ZX1012-0UG46-5BA1

Manuals

Title	Reference
Functional safety - Use of SIRIUS 3UG4 and 3RR2 monitoring relays with integrated sensors	Internet (http://support.automation.siemens.com/WW/view/en/39863898)

Parameters

B

Nominal line voltage

The nominal voltage is the value of the electrical voltage during normal operation specified by the manufacturer. The nominal voltage is usually stated with a maximum permissible tolerance range. In Europe, the nominal value of the line voltage, the nominal line voltage, is 230 V (line / neutral) or 400 V (line / line).

(Warning) threshold for voltage asymmetry

Voltage asymmetry is the difference between the highest and the lowest phase voltage in relation to the highest phase voltage (Ux-y max - Ux-y min) / Ux-y max.

Note

Deviation from the definition according to IEC/NEMA

The definition given above for voltage asymmetry deviates from the definition according to IEC/NEMA. It usually results in a greater value for voltage asymmetry than that arrived at from the definition according to IEC/NEMA, so that a higher level of measuring accuracy is achieved.

Voltage asymmetry can be parameterized as "Threshold for voltage asymmetry" or as "Warning threshold for voltage asymmetry" (only on devices for IO-Link).

If the warning threshold is reached on device variants for IO-Link, this is transmitted cyclicly via IO-Link and the relevant bits are set in the diagnostics data set or the semiconductor output (terminal C/Q) is switched in SIO mode.

If the threshold has been reached, the output relays are switched accordingly and an IO-Link message may be sent.

Possible indications on the display: Asy (threshold), possibly Asy! (warning threshold)

Tripping delay time

If the measured value overshoots or undershoots the set limit value, the delay time that can be set using the "Tripping delay time" parameter starts. On expiry of this time, the switching contact changes state and a message may be sent via IO-Link.

Possible indications on the display:

- Tripping delay time in the case of voltage undershoot: U▼Del
- Tripping delay time in the case of voltage overshoot: U▲Del
- Tripping delay time in the case of (active) current undershoot: I▼Del
- Tripping delay time in the case of (active) current overshoot: I▲Del
- Tripping delay time in the case of speed undershoot: ▼Del

- Tripping delay time in the case of speed overshoot: ▲Del
- Tripping delay time on undervoltage or overshoot of the asymmetry value: Del
- Tripping delay time for asymmetry: AsyDel
- Tripping delay time in the case of undershoot of the cos phi value: φ▼Del
- Tripping delay time in the case of overshoot of the cos phi value: φ▲Del

ON-delay time

The setting of the "ON-delay time" parameter prevents limit violations such as undershoots (typical of inductive loads) while the system engages from generating a switching response.

The ON-delay time starts in the following cases, depending on the parameter settings:

- **At restart**
  If a measurable signal is again detected after the lower measuring range limit has been undershot.
- **At Power-ON**
  Re-connection of the supply voltage (Power-ON) of the device after switching off the current flow (zero current).
- **At manual reset**
  A fault is acknowledged by a manual reset. Following this, the device behaves in the same way as when the supply voltage is switched on again.

Starting the ON-delay time via IO-Link

The ON-delay time can also be started through the process image of the outputs (PIQ) by setting the control command "Start ON delay time." This is a simple method of permitting brief load steps during operation if these are predictable.

The ON-delay time can be set either locally via the three keys on the device, or via IO-Link. The requirements governing the starting of the ON-delay time (Power-ON, manual reset and/or restart) can only be modified via IO-Link.

Note

After exiting the menu level SET, the ON-delay time starts again.

Start of the ON-delay

The following table shows the behavior of the ON-delay time (onDel) with the device variants 3UG4 monitoring relay and 3RR2 current monitoring relay.

Device variants	Start of the ON-delay possible for:		
	"Power-ON"	Automatic reset	Manual reset
3RR21	Yes	Yes	Yes
3RR22	Yes	Yes	Yes
3UG4614	Yes	No	No
3UG4621 / 3UG4622	Yes	Yes	Yes
3UG4624	Yes	No	No

Device variants	Start of the ON-delay possible for:		
	"Power-ON"	Automatic reset	Manual reset
3UG4625	Yes	No	Yes
3UG4633	Yes	No	No
3UG4641	Yes [1]	Yes [1]	Yes [1]
3UG4651	Yes	No	No

[1] Setting: I_{res}▼ = OFF

You will find further information on the ON-delay time in the "Functionality" chapter for each monitoring relay.

Possible indications on the display:onDel

(Warning) threshold for undershoot

The device monitors a measured value for undershoot.

The measured value can be parameterized as a threshold or as a warning threshold (on the 3RR22 and 3UG4583 devices only) for undershoot.

The warning threshold defines the switching threshold of the relevant output relay prior to tripping by measured value undershoot.

If the set threshold is undershot, the output relay changes its switching state after expiry of the set delay time, and an IO-Link message may be sent. If the measured value has reached the relevant set hysteresis value, the output relay (reset response is set to autoreset) will immediately revert to its original state and a new IO-Link message may be sent.

Further response depends on the set reset response (see "Reset response" parameter).

You can find information on the switching behavior of the output relays in the "Functionality" chapters of the relevant monitoring relays.

Possible indications on the display:

- Current undershoot: I▼ (threshold), I!▼(warning threshold)
- Voltage undershoot: U▼ (threshold), possibly U!▼ (warning threshold)
- Speed undershoot: rpm▼ (threshold), possibly rpm!▼ (warning threshold)
- Power factor undershoot: φ▼ (threshold), possibly φ!▼ (warning threshold)
- Active current undershoot: I_r▼ (threshold), possibly I_r!▼ (warning threshold)

Possible LED indications:

- Level undershoot: Yellow LED lights up as soon as the output relay picks up, depending on the functional principle selected
- Insulation resistance undershoot: Red LED lights up continuously
- Voltage undershoot: Red LED lights up continuously

(Warning) threshold for overshoot

The device monitors a measured value for overshoot.

The measured value can be parameterized as "Threshold for overshoot" or as "Warning threshold for overshoot" (only on devices for IO-Link).

The setting for the "Warning threshold for overshoot" parameter defines the switching threshold of the relevant output relay prior to tripping due to a measured value overshoot.

If the set "Threshold for overshoot" parameter is overshot, the output relay will change its switching state after expiry of the set delay time and an IO-Link message may be sent. If the measured value has reached the relevant set hysteresis value, the output relay ("Reset response" parameter set to autoreset) will immediately revert to its original state and a new IO-Link message may be sent.

Further response depends on the set reset response (see "Reset response" parameter).

You can find information on the switching behavior of the output relays in the "Functionality" chapters of the relevant monitoring relays.

Possible indications on the display:

- Current overshoot: I▲ (threshold), I!▲ (warning threshold)
- Voltage overshoot: U▲ (threshold), possibly U!▲ (warning threshold)
- Speed overshoot: rpm▲ (threshold), possibly rpm!▲ (warning threshold)
- Power factor overshoot: φ▲ (threshold), possibly φ!▲ (warning threshold)
- Active current overshoot: I_r▲ (threshold), possibly I_r!▲ (warning threshold)
- Fault current overshoot: I▲(threshold), possibly I! (warning threshold)

Reset response

The setting of the "Reset response" parameter controls how the device behaves after tripping in the event of an error, and the subsequent reversion of the measured values to the normal range once the cause of the error has been dealt with.

The outputs are reset dependent on the setting of the "Reset response" parameter.
The following settings can be selected:

- Automatic reset
  If the device is set to automatic reset, the switching contact will respond once the normal range plus the hysteresis threshold have been reached. The device is reset automatically as soon as a previously occurring error has been dealt with. The overshoot or undershoot which triggered the response is not saved.
- Manual RESET
  If manual RESET is selected, the switching contact remains in the current switching state even if the measured value returns to a permissible value.

Possible indications on the display: Mem

Hysteresis

Hysteresis is the continuation of an effect within the hysteresis range after its cause has been removed; its purpose is to prevent repeated response in the threshold value range.

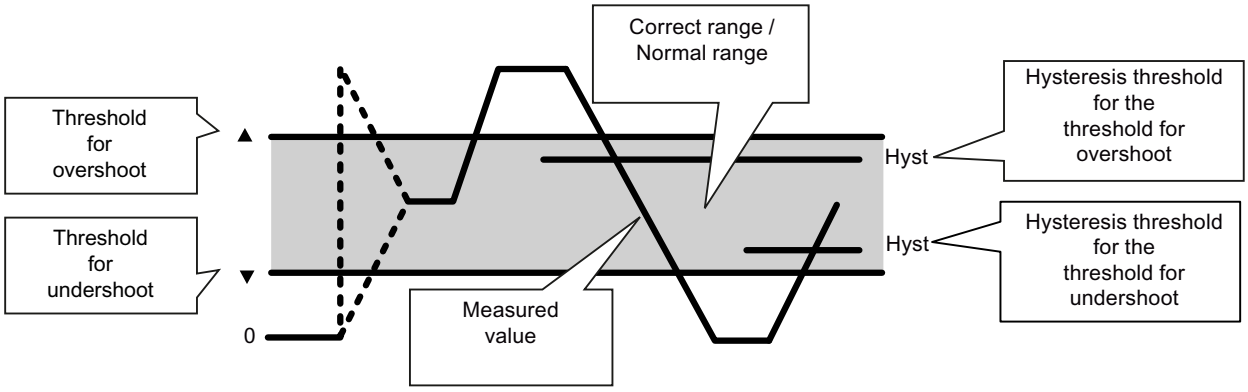

Figure B-1 Explanation of hysteresis

If, after the upper threshold value has been overshot to such an extent that switching was necessary, the measured value returns to the normal range, and switching over to the correct range will not take place until a measured value which undershoots the hysteresis threshold has been reached. The same applies if the lower threshold value is undershot.

The hysteresis is only active if the "Reset response" parameter is set to autoreset.

Possible indications on the display: Hyst

Initialization

When the monitoring relay is connected to the supply voltage, the initialization phase starts and internal functional tests are performed. During the initialization phase that lasts approximately 1.6 s, the connection to the 3UL23 residual-current transformer is one of the things that is checked. During this time, no measurement or monitoring of the fault current takes place. - - A is shown on the display. The relay switching behavior during the initialization phase can be determined with the help of the "Init" parameter. In the factory setting ("Init" parameter = **ERR**), the output relays switch to the fault state until completion of the initialization phase because there is no valid measuring result of the fault current.

If the parameter is set to "OK", it is assumed that there is no internal fault and the fault current will be within the set limits. For this reason, the output relays are switched to the work position when the supply voltage is present.

After completion of the initialization phase, a permanent self-test takes place without interrupting the monitoring function.

Restart delay time

If autoreset is activated on the monitoring relay, the restart delay will start as soon as the measured value to be monitored reenters to the correct range after an overshoot or undershoot. The associated hysteresis threshold is taken into consideration here. At the end of this time the contacts switch back to normal operation.

The restart delay time allows the motor to cool down if the device has tripped due to overtemperature.

Possible indications on the display: RsDel

Blocking current monitoring

If the load current overshoots the value of the set threshold for overshoot (I▲) by a multiple of n during operation, a blocking current error has occurred. The tripping delay time that is running due to the current threshold overshoot is stopped and the outputs are switched.

Indication on the display: n x I▲

Residual current monitoring

If residual current monitoring has been activated (I >> ⏚ = yes) and the total current of the load currents at terminals 1/L1 - 2/T1, 3/L2 - 4/T2 und 5/L3 - 6/T3 rises above the permissible threshold (S00: 1.5 A / S0: 4 A), the ON-delay time onDel, the tripping delay time Del, and the restart delay time RsDel are stopped and both the changeover contact and the semiconductor output change their switching state immediately (≤ 200 ms).

Indication on the display: I >> ⏚ = yes

Nominal fault current of the summation current transformer

The 3UL22 summation current transformers differ in size (size of the let-through opening) and within each size by different nominal currents for which the summation current transformers are rated.

For the 3UG4624 fault current monitoring relay to be able to indicate the real fault current, the nominal fault current IΔn of the connected summation current transformer must be set.

Possible indications on the display: IΔn

Phase sequence monitoring

If phase sequence monitoring has been activated and the load currents exhibit the wrong phase sequence, the CO contact and the semiconductor output will change their switching status immediately (≤ 200 ms).

Possible indications on the display:

Current monitoring principle

The monitoring relays monitor an AC load current which flows through the device terminals depending on whether monitoring has been set to check for overshoot or undershoot, or window monitoring.

There are two current monitoring principles:

- Apparent current I_s
- Active currentI_p

Whereas apparent current monitoring is primarily used in the rated torque range or for overload, active current monitoring can be used to observe and evaluate the degree of loading across a motor's entire torque range.

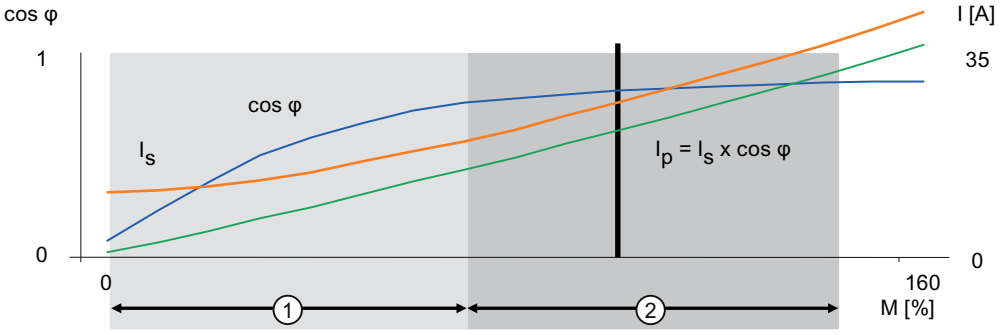

①	Strong change in cos φ
②	Strong change in apparent current
cos φ	Power factor
I [A]	Current
M [%]	Torque as a % of the rated torque
I_p	Active current
I_s	Apparent current

Figure B-2 Load current monitoring diagram (shown using the example of a real motor)

The diagram shows that it only makes sense to use the power factor cos φ to monitor the rated current up to approx. 70%. At a higher rated current the change in the power factor is too slight to produce measured values of any significance. In contrast, the monitoring quality of the apparent current I_s increases along with the torque, in other words as the rated current rises. It is for this reason that monitoring of the apparent current is primarily used if a load needs to be protected against overload. Integrated monitoring from no-load operation up to overload is only possible by monitoring the active current I_p, the product of power factor and apparent current.

Note

Determining the thresholds in practice

You can determine the thresholds by operating the motor at the load limits, for example. You can then read the thresholds as the up-to-date measured values off the display of the monitoring relay.

Relay switching behavior

An output relay responds in accordance with the set switching behavior. Several variations can be distinguished here:

- Closed-circuit principle (NC)
  If the closed-circuit principle is selected, the output relay picks up when the voltage is applied (contact .1/.4 closed). The output relay drops out in the event of a fault (contact .1/.2 closed). If the supply voltage fails, the output relay also returns to this position so that a supply voltage failure is detected and reported.
  The semiconductor output responds as an NC contact, in other words, if a fault is detected, the output Q has a high resistance.
- Open-circuit principle (NO)
  If the open-circuit principle is selected, the output relay only picks up in the event of a fault (contact .1/.4 closed). Interruptions to the supply voltage or the rated control supply voltage are not displayed.
  The semiconductor output responds as an NO contact, in other words, if a fault is detected, the supply voltage is present at output Q.
- Drainage control (OV ≙ NO) (on 3UG4501 only)
  If the rotary button is in the OV (Overshoot) position, monitoring mode drainage control is selected. On the drainage control, contacts 11/14 are closed when the upper threshold is overshot after the tripping delay time has expired. Contacts 11/12 are only closed when the lower threshold is undershot.
- Inflow control (UN ≙ NC) (on 3UG4501 only)
  When the rotary button is in the UN (Undershoot) position, the monitoring mode inflow control is selected and the output relay picks up when the supply voltage is applied (contact .1 / .4 closed). When the upper threshold is overshot, the output relay drops out (contact .1/.2 closed). When the lower threshold is undershot, the output relay picks up again (contact .1/.4 closed).

Unlike with pure reconnection at the CO contact output, with use of the relay switching behavior parameter, it is possible to prevent unwanted pumping in the absence of a supply voltage.

Possible indications on the display:

- Closed-circuit principle: NC
- Open-circuit principle: NO

Sensor sensitivity

The sensor sensitivity is the sensitivity R sens, with which the filling level monitoring relay must respond.

The working principle of the filling level monitoring relays is based on resistance measurement of conductive liquids (conductive measurement method). This method can be used with all liquids and substances that have a resistivity < 200 kΩ.

Table B-1 Resistivity of liquids

Product	kΩ	Product	kΩ
Buttermilk	1	Natural water	5
Fruit juice	1	Waste water treatment	5

Product	kΩ	Product	kΩ
Vegetable juice	1	Starch solution	5
Milk	1	Oil	10
Soup	2,2	Condensation	18
Beer	2,2	Soap foam	18
Coffee	2,2	Jellies	45
Ink	2,2	Gelatin	45
Salt water	2,2	Sugar solution	90
Wine	2,2	Whisky	220
		Distilled water	450

Scaling factor

The "scaling factor" parameter allows the user to set the number of pulses per revolution provided by the pulse encoder. This allows the revolutions per minute to be read direct on the display.

Possible indications on the display: Scale

Stabilization delay

An output is only switched to the "correct position" after switching on the supply voltage if all monitored measured values are stable for the duration of the stabilization delay. The monitoring functions are active within the stabilization delay. A threshold overshoot or undershoot in this time does not result in a fault, but instead in restarting of the stabilization delay.

The stabilization delay starts in the following cases:

- **At Power-ON**
  Reapplication of the supply voltage (Power-ON) of the device after disconnection of the current flow (zero current).
- **At manual reset**
  A fault is acknowledged by a manual reset. After this, the device responds in the same way as
  when the supply voltage is connected.

Starting the stabilization delay via IO-Link

The stabilization time can also be started through the process image of the outputs (PIQ) by setting the control command "Start stabilization time."

The "Stabilization time" parameter is set either locally using the three keys on the device, or via IO-Link. The requirements governing the starting of the stabilization delay (Power-ON and/or manual reset) can only be modified via IO-Link.

The stabilization of line voltage is useful, for example, in the case of generator operation.

Note

Whenever the menu level is exited SET, the stabilization time starts again.

Indication on the display: stDel

Phase failure monitoring

If the "phase failure monitoring" parameter is activated, an immediate shutdown is carried out in the event of a failure of one of the phases (or of the N conductor) to protect the application from follow-on damage.
Set delay times have no effect on phase failure monitoring.

The "phase failure monitoring" parameter on the 3UG48 monitoring relays is set either locally via the three keys on the device, or via IO-Link.

Possible indications on the display:

Dimension Drawings

C

C.1 Dimension drawings 3RR2 monitoring relay

3RR2.41-1A.30 (screw connection, S00)

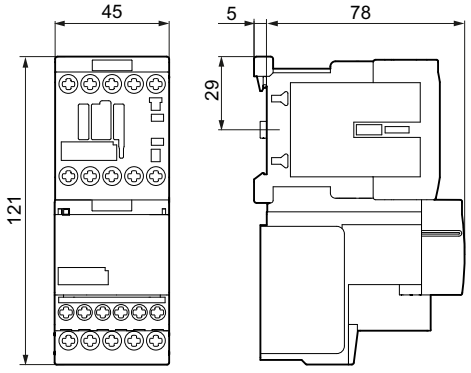

Figure C-1 3RR2.41-1A.30 with contactor

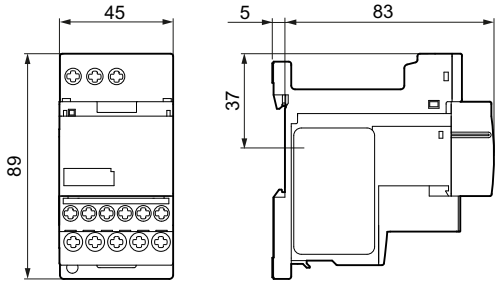

Figure C-2 3RR2.41-1A.30 with terminal support for stand-alone assembly

3RR2.41-2A.30 (spring-loaded connection, S00)

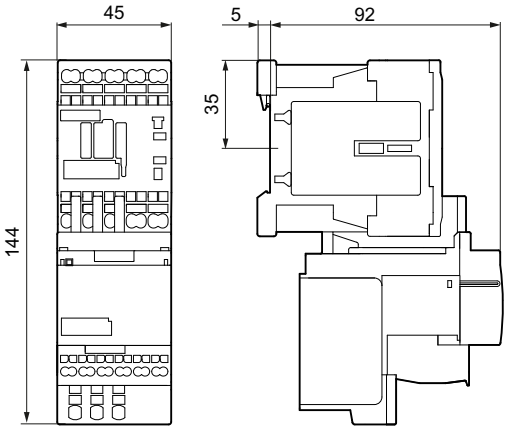

Figure C-3 3RR2.41-2A.30 with contactor

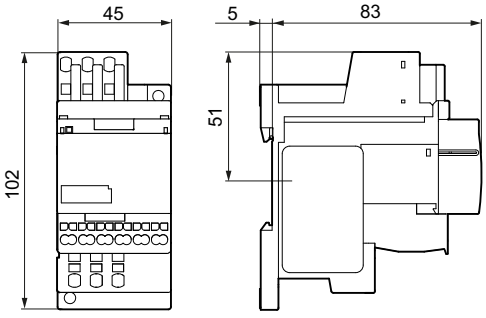

Figure C-4 3RR2.41-2A.30 with terminal support for stand-alone assembly

3RR2.42-1A.30 (screw connection, S0)

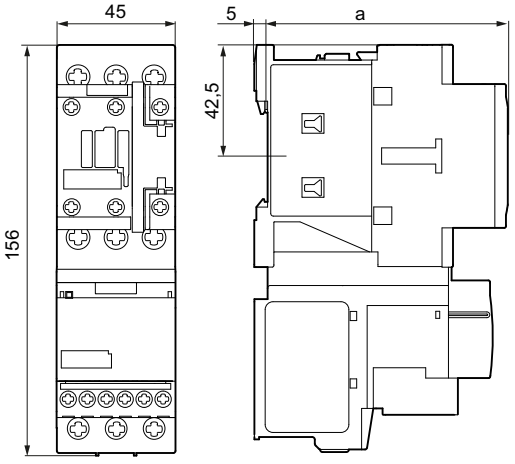

Figure C-5 3RR2.42-1A.30 with contactor

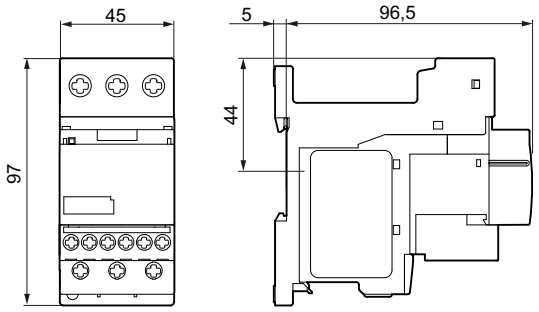

Figure C-6 3RR2.42-1A.30 with terminal support for stand-alone assembly

3RR2.42-2A.30 (spring-loaded connection, S0)

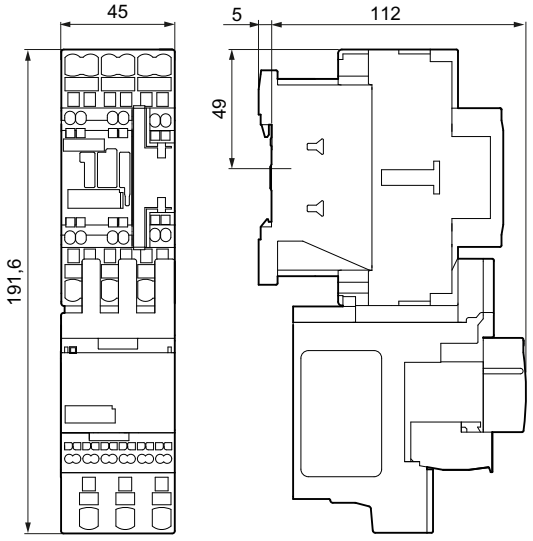

Figure C-7 3RR2.42-2A.30 with contactor

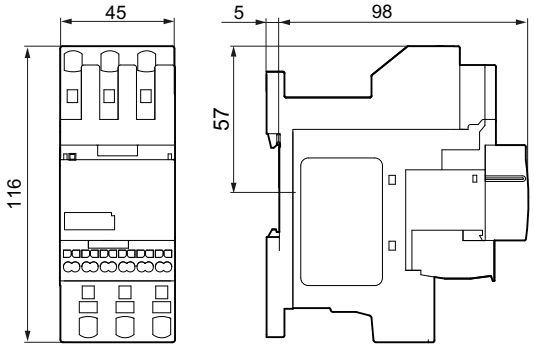

Figure C-8 3RR2.42-2A.30 with terminal support for stand-alone assembly

3RR2143-1A.30 (S2)

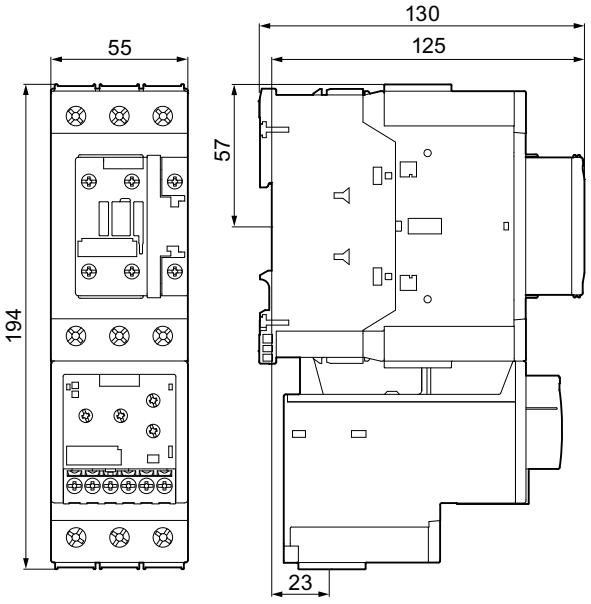

Figure C-9 3RR2143-1A.30 with contactor

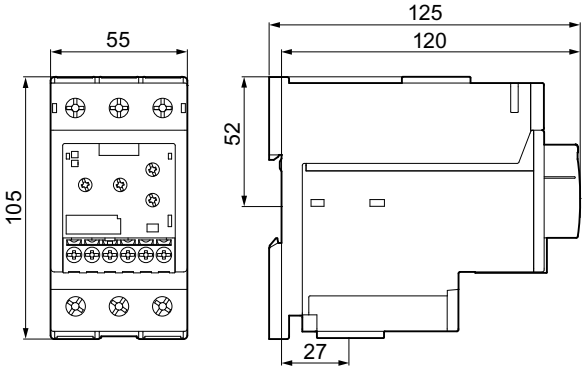

Figure C-10 3RR2143-1A.30 with terminal support for stand-alone assembly

3RR2143-3A.30 (S2)

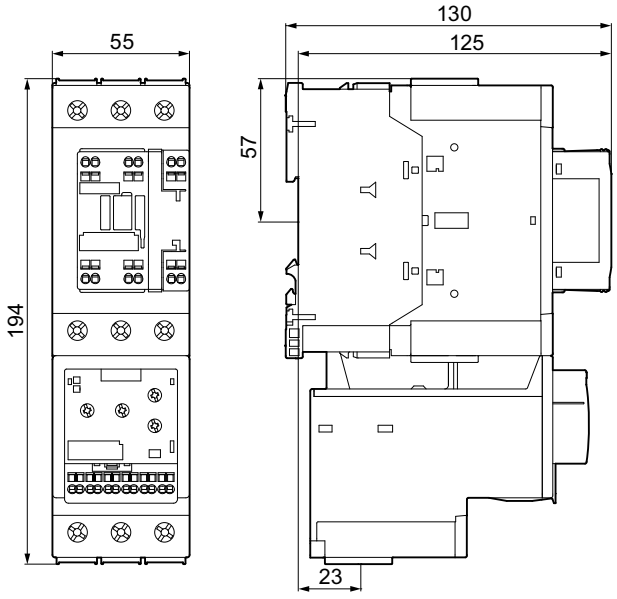

Figure C-11 3RR2143-3A.30 with contactor

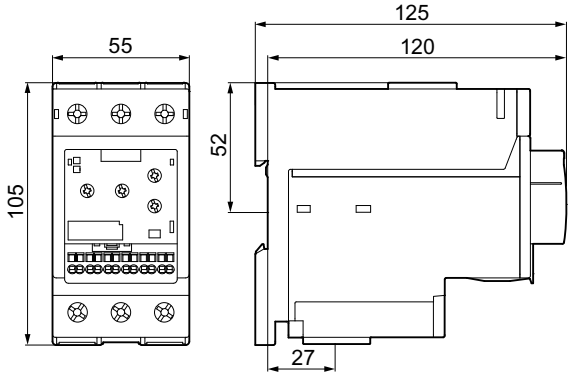

Figure C-12 3RR2143-3A.30 with terminal support for stand-alone assembly

3RR2243-1F.30 (S2)

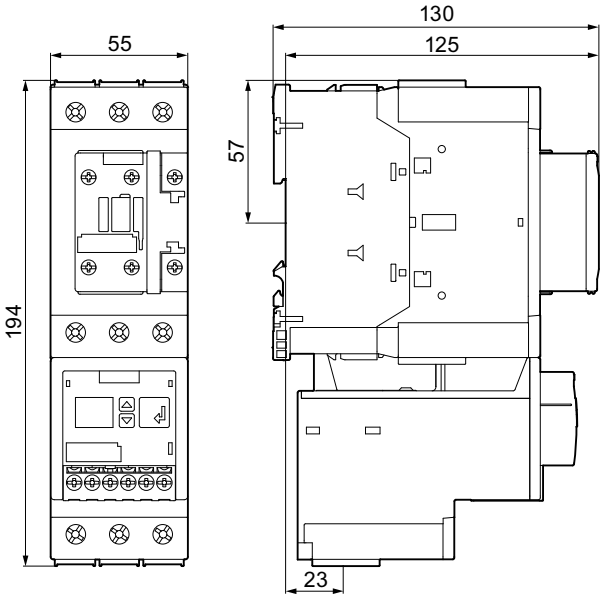

Figure C-13 3RR2243-1F.30 with contactor

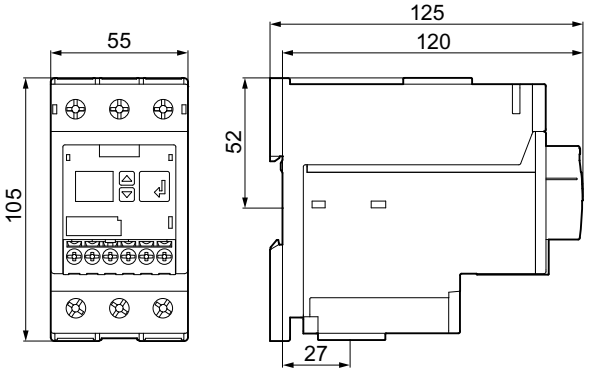

Figure C-14 3RR2243-1F.30 with terminal support for stand-alone assembly

3RR2243-3F.30 (S2)

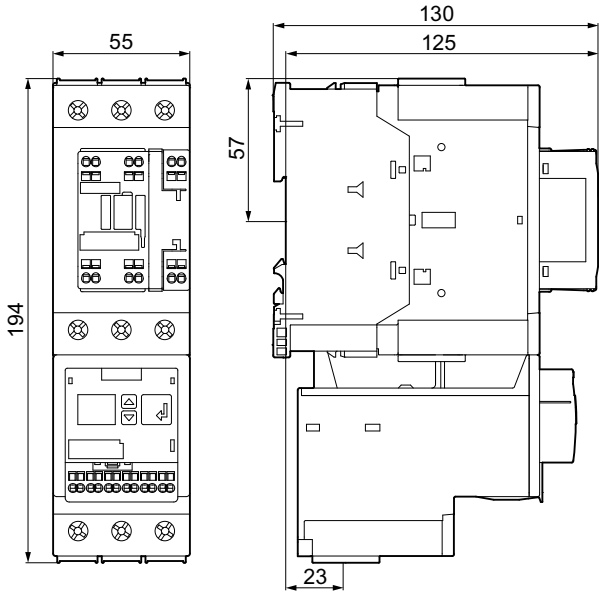

Figure C-15 3RR2243-3F.30 with contactor

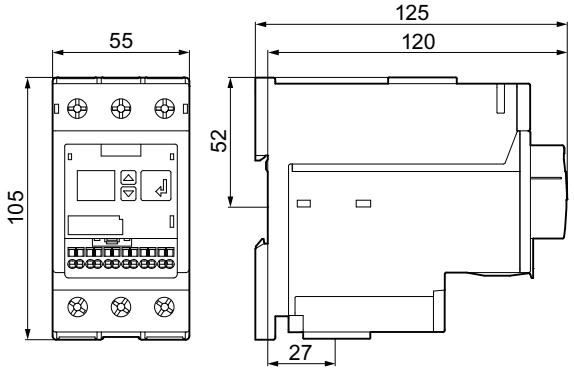

Figure C-16 3RR2243-3F.30 with terminal support for stand-alone assembly

C.2 Dimension drawings 3UG4 monitoring relays

C.2.1 Dimension drawings 3UG4 monitoring relays. (2 connecting terminals)

3UG4. monitoring relays with 2 connecting terminals (screw-type connection)

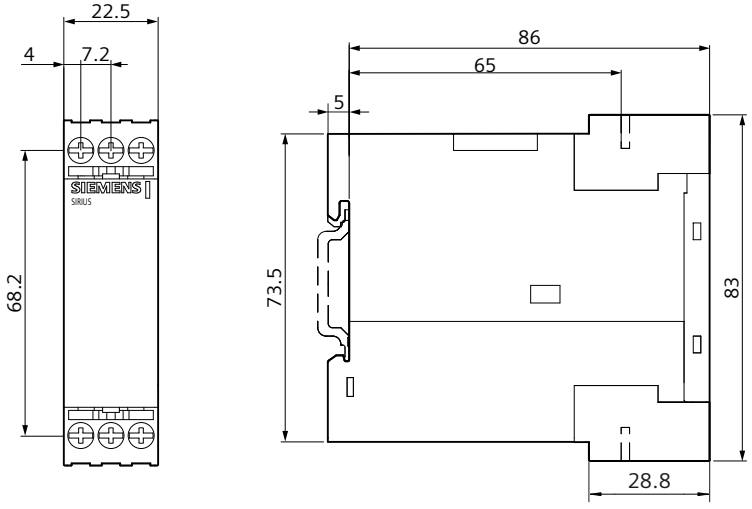

Figure C-17 3UG4. monitoring relays with 2 connecting terminals with screw-type connections

3UG4. monitoring relays with 2 connecting terminals (spring-loaded connections)

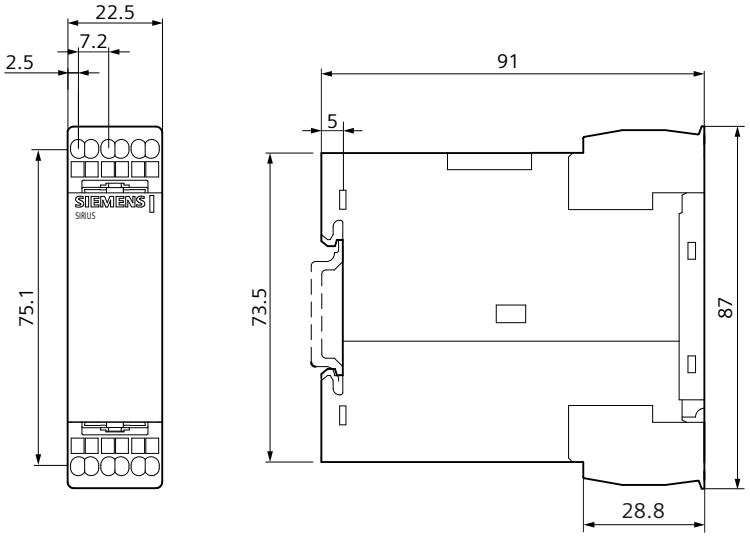

Figure C-18 3UG4. monitoring relays with 2 connecting terminals with spring-loaded connections

C.2.2 Dimension drawings 3UG4 monitoring relays. (3 connecting terminals)

3UG4. monitoring relays with 3 connecting terminals (screw-type connection)

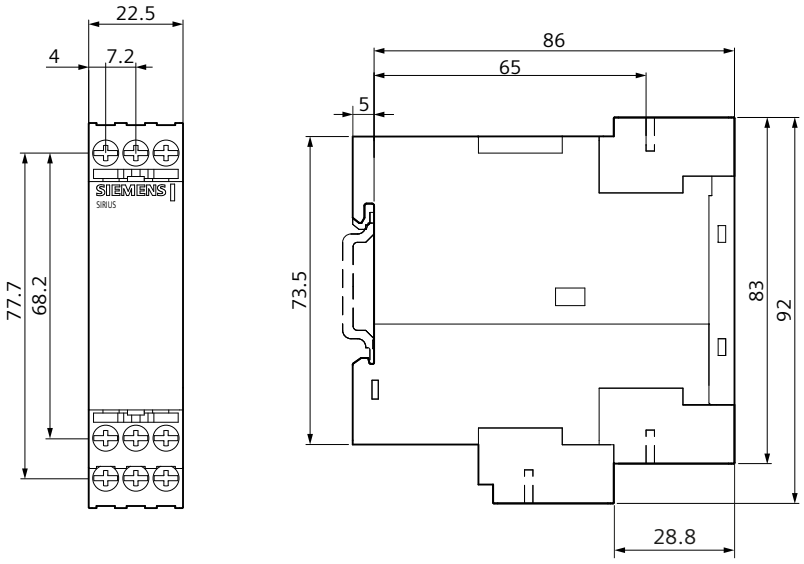

Figure C-19 3UG4. monitoring relays with 3 connecting terminals with screw-type connections

3UG4. monitoring relays with 3 connecting terminals (spring-loaded connections)

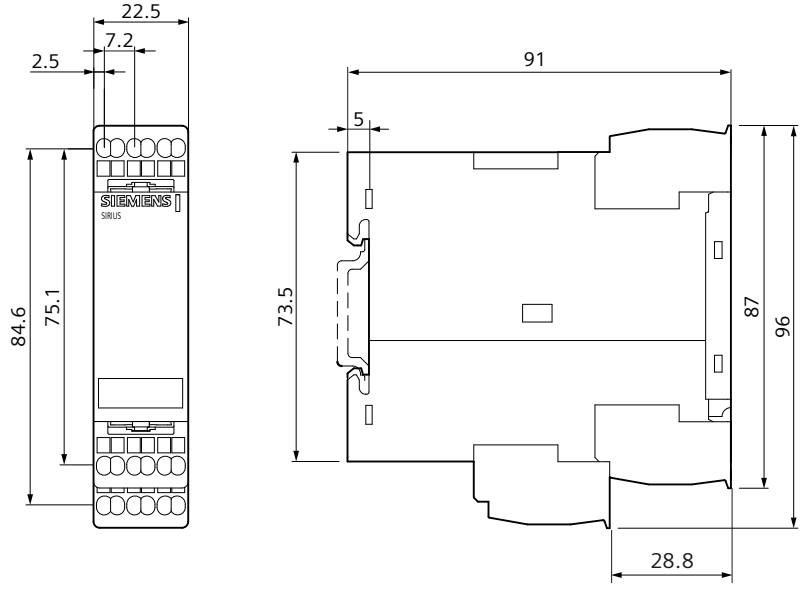

Figure C-20 3UG4. monitoring relays with 3 connecting terminals with spring-loaded connections

C.2.3 Dimension drawings 3UG4 monitoring relays. (4 connecting terminals)

3UG4. monitoring relays with 4 connecting terminals (screw-type connection)

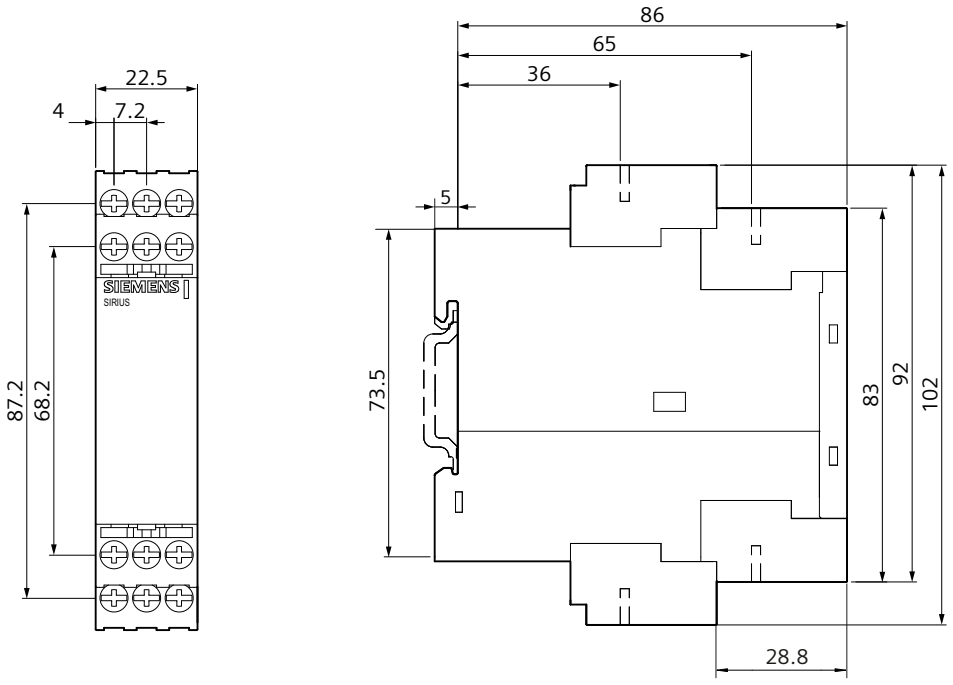

Figure C-21 3UG4. monitoring relays with 4 connecting terminals with screw-type connections

3UG4. monitoring relays with 4 connecting terminals (spring-loaded connections)

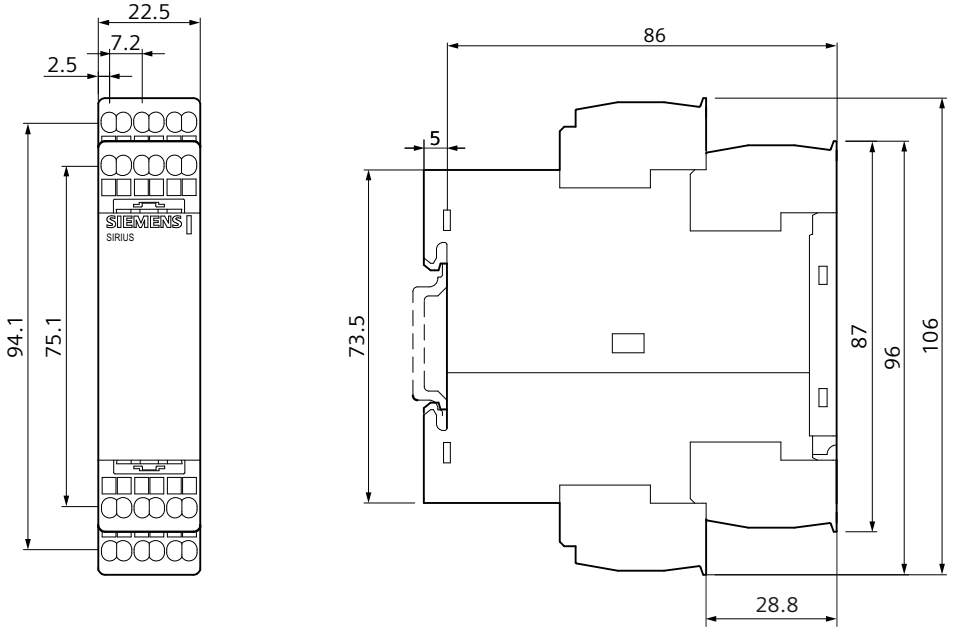

Figure C-22 3UG4. monitoring relays with 4 connecting terminals with spring-loaded connections

C.2.4 Dimension drawings for 3UG458.-1.W30 insulation monitoring relay/ 3UG4983 voltage reducer module)

3UG4581-1AW30/3UG4582-1AW30 monitoring relays

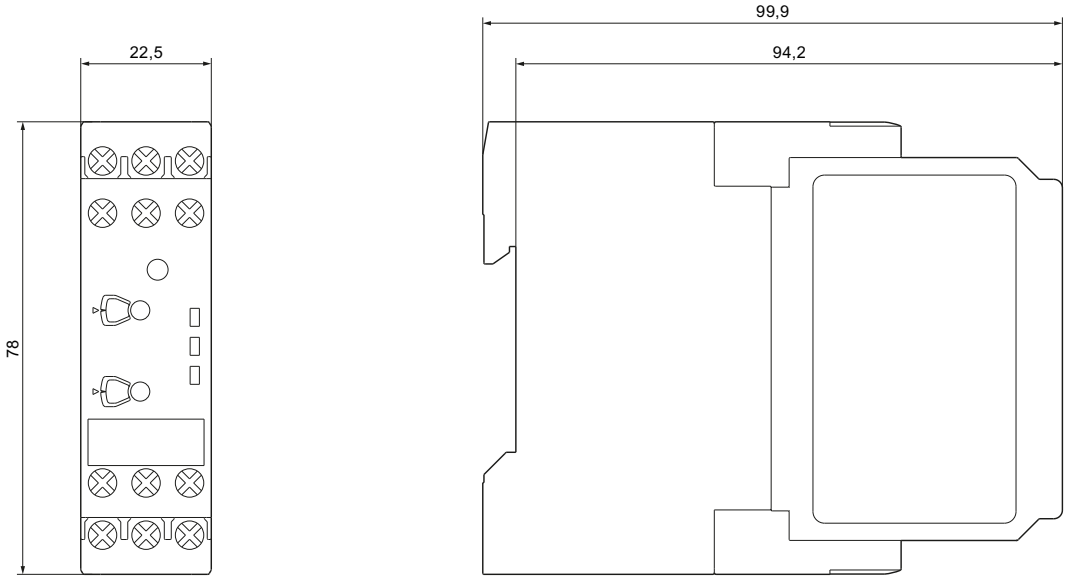

Figure C-23 3UG4581-1AW30/3UG4582-1AW30 insulation monitoring relays

3UG4583-1CW30 monitoring relay

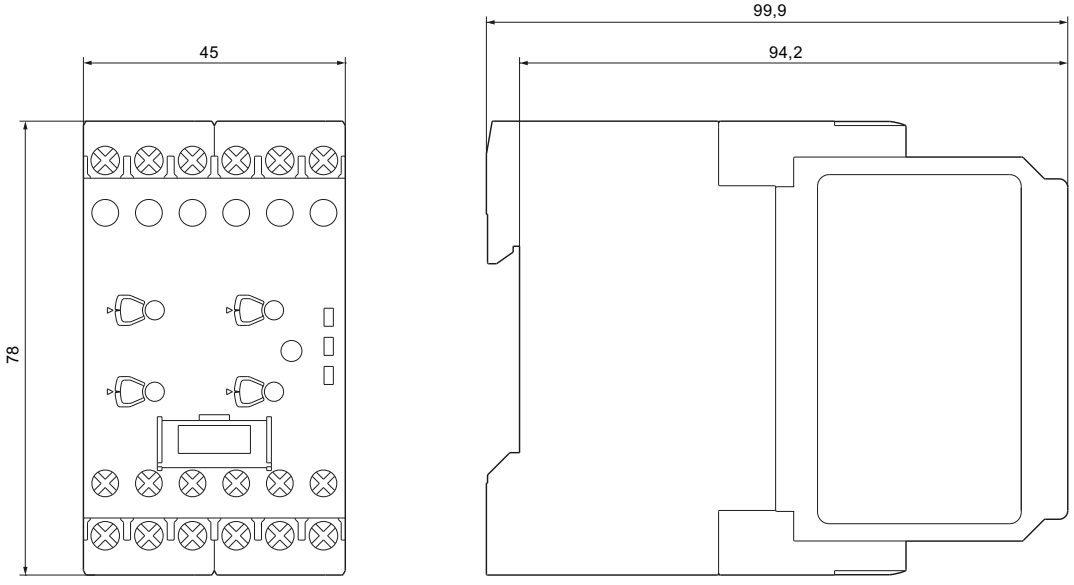

Figure C-24 3UG4583-1CW30 insulation monitoring relay

3UG4983-1A upstream module

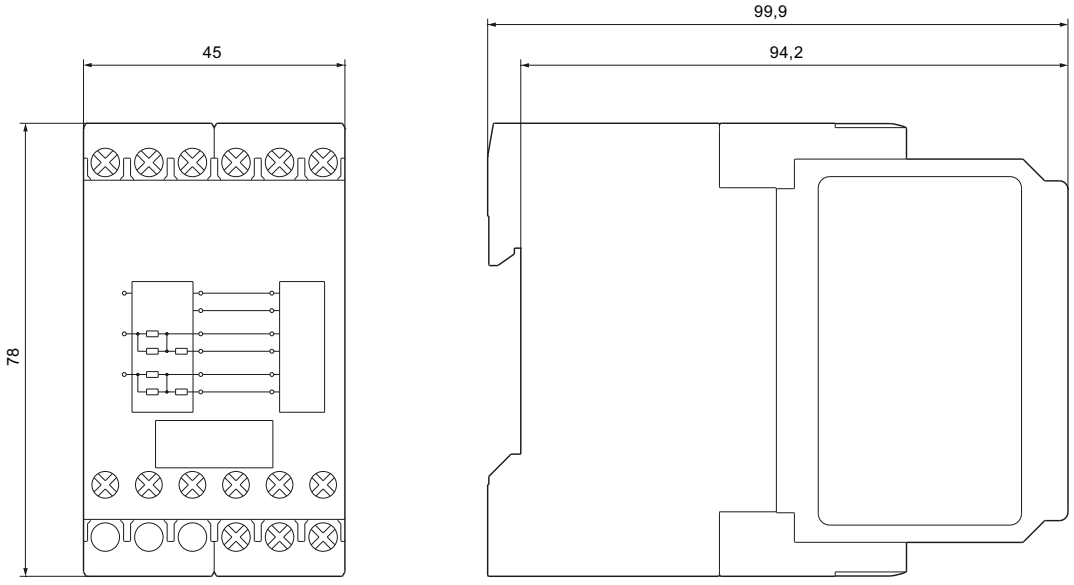

Figure C-25 3UG4983-1A upstream module

C.2.5 Dimension drawings for 3UG458.-..W31 insulation monitoring relay/ 3UG4983-.AA01 voltage reducer module)

3UG4581-1AW31 monitoring relay

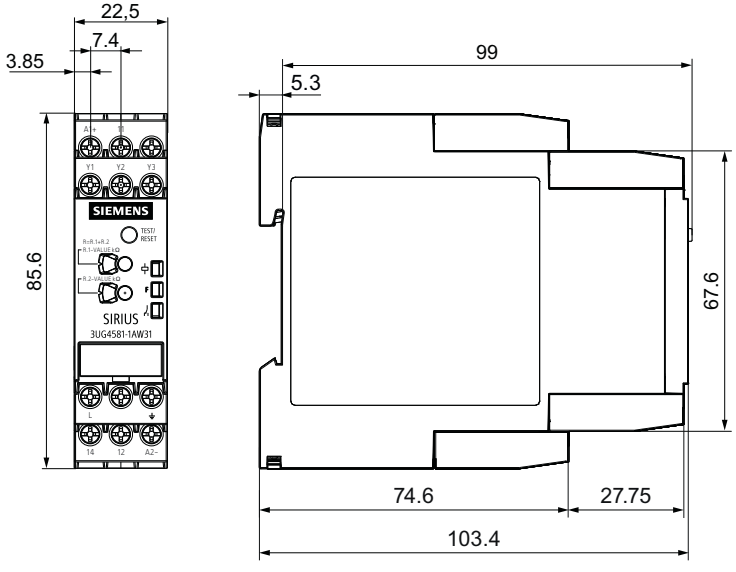

Figure C-26 3UG4581-1AW31 insulation monitoring relay

3UG4581-2AW31 monitoring relay

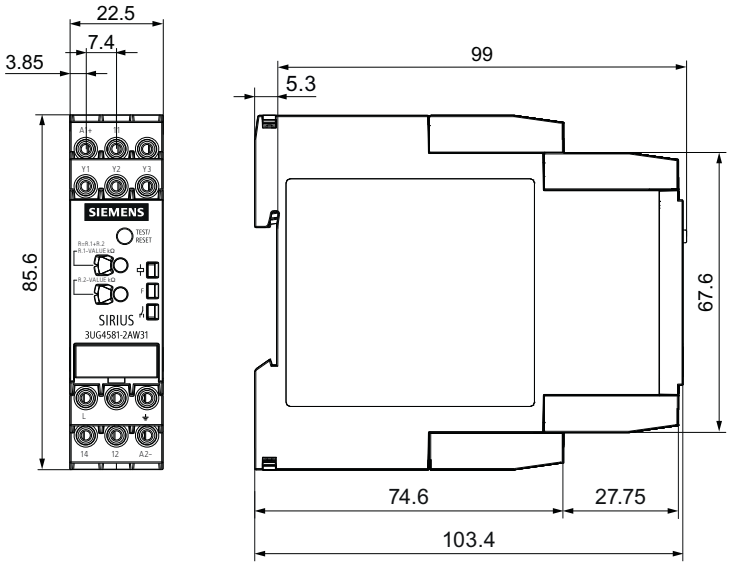

Figure C-27 3UG4581-2AW31 insulation monitoring relay

3UG4582-1AW31 monitoring relay

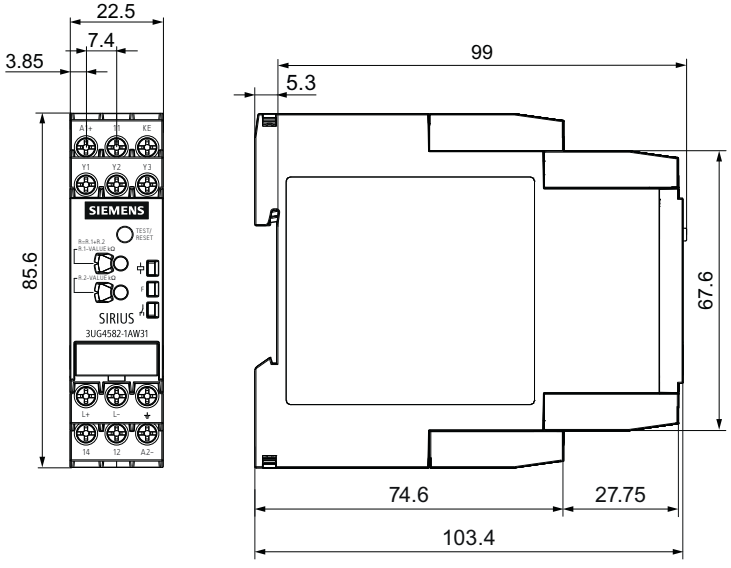

Figure C-28 3UG4582-1AW31 insulation monitoring relay

3UG4582-2AW31 monitoring relay

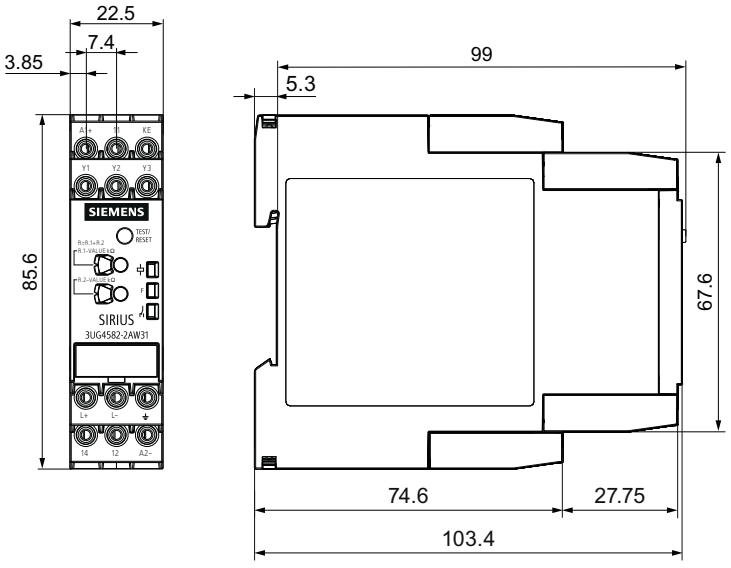

Figure C-29 3UG4582-2AW31 insulation monitoring relay

3UG4583-1CW31 monitoring relay

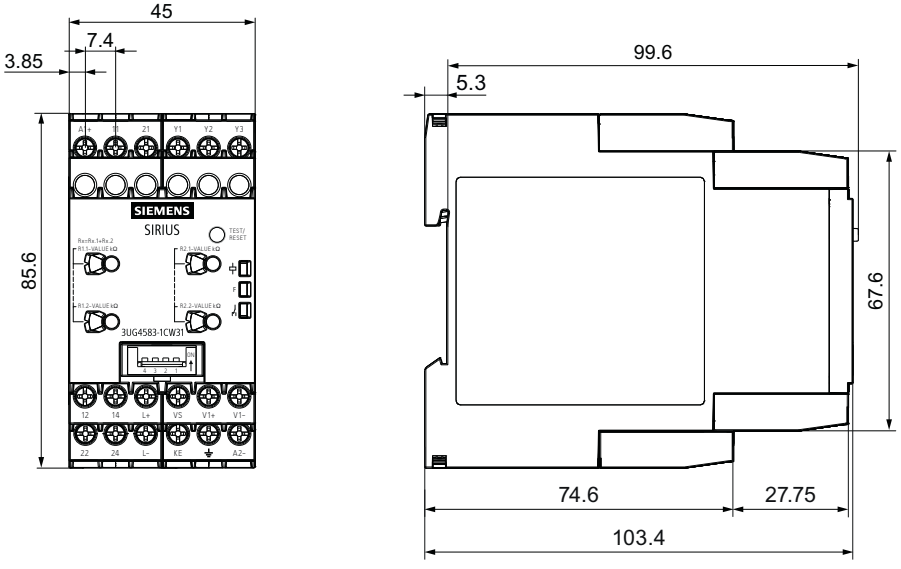

Figure C-30 3UG4583-1CW31 insulation monitoring relay

3UG4583-2CW31 monitoring relay

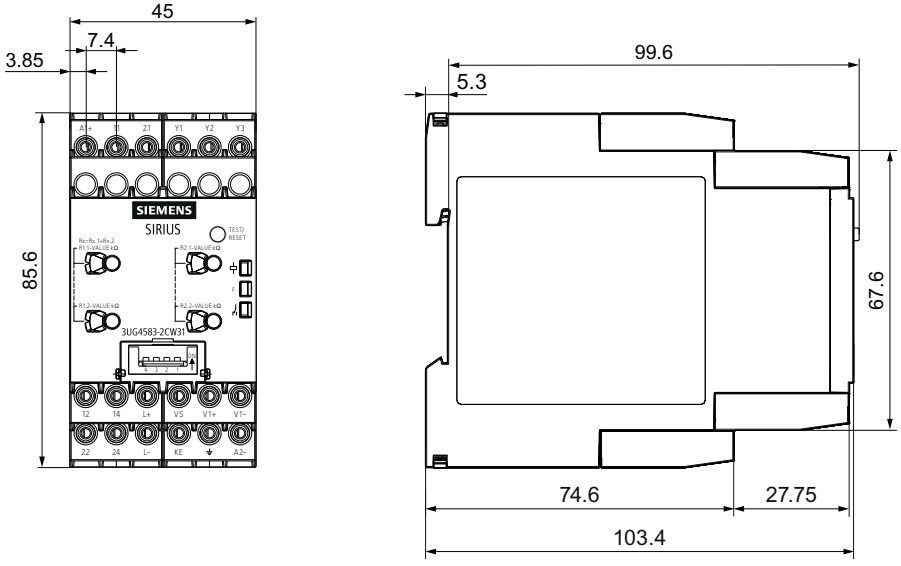

Figure C-31 3UG4583-2CW31 insulation monitoring relay

3UG4983-1AA01 voltage reducer module

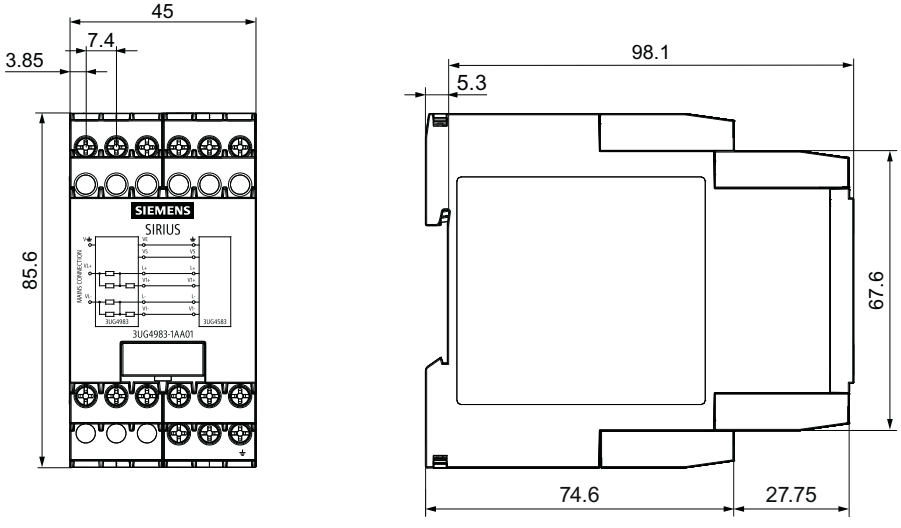

Figure C-32 3UG4983-1AA01 voltage reducer module

3UG4983-2AA01 voltage reducer module

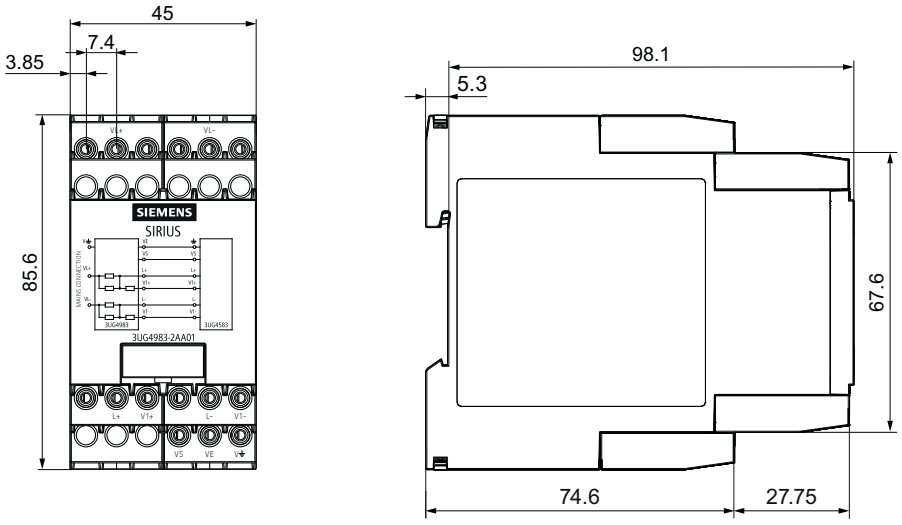

Figure C-33 3UG4983-2AA01 voltage reducer module

Menu-based operation

D

3RR2241 current monitoring relay

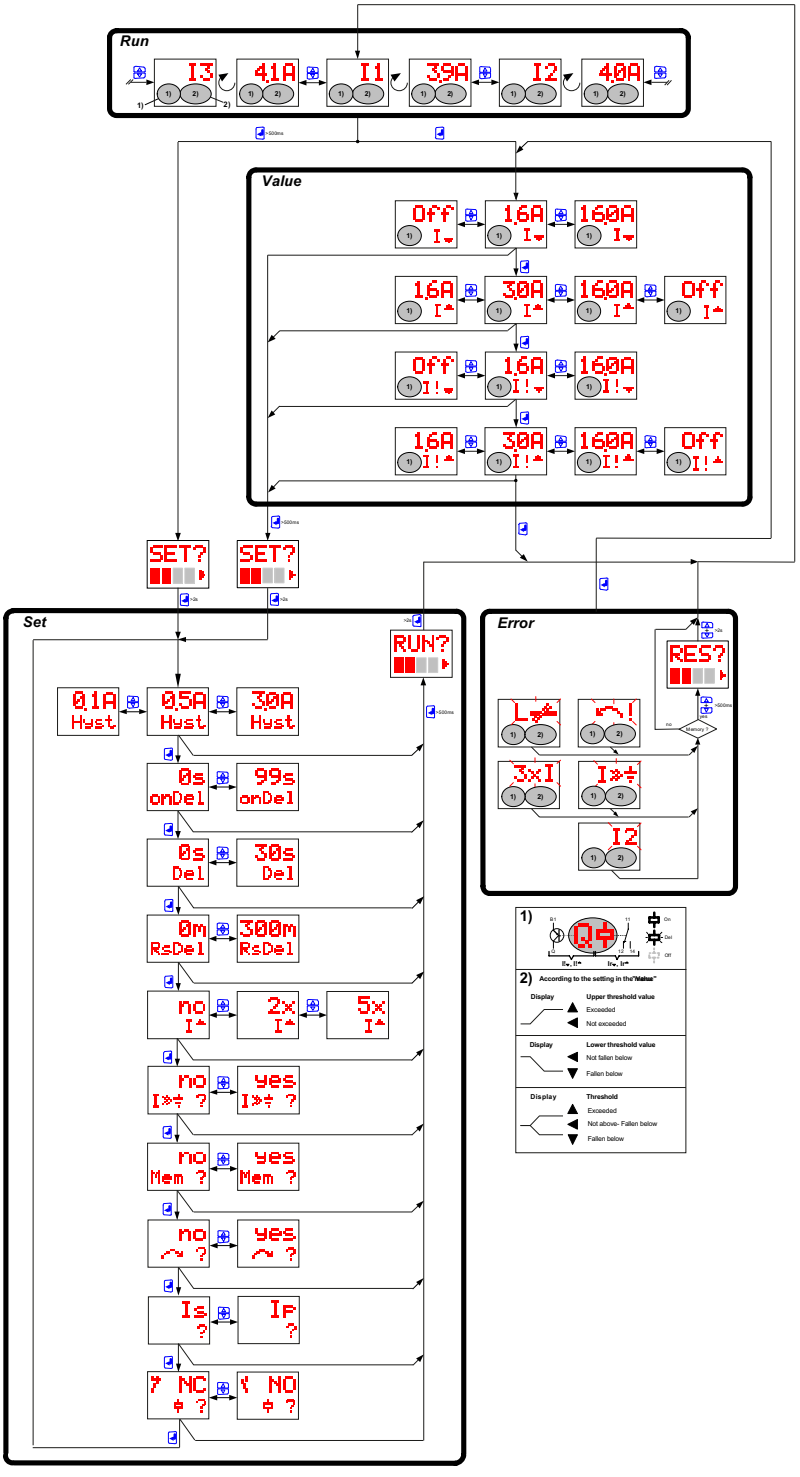
Run
I3
4.1A
I1
3.9A
I2
4.0A
Value
Off
1.6A
16.0A
1.6A
3.0A
16.0A
Off
Off
1.6A
16.0A
1.6A
3.0A
16.0A
Off
SET?
SET?
Set
RUN?
0.1A Hyst
0.5A Hyst
3.0A Hyst
0s onDel
99s onDel
0s Del
30s Del
0m RsDel
300m RsDel
no
2x
5x
no
yes
no Mem ?
yes Mem ?
no
yes
Is ?
IP ?
NC
NO
Error
RES?
3xI
I2
1)
2) According to the setting in the "Value"
Display
Upper threshold value
Exceeded
Not exceeded
Display
Lower threshold value
Not fallen below
Fallen below
Display
Threshold
Exceeded
Not above- Fallen below
Fallen below

3RR2242 current monitoring relay

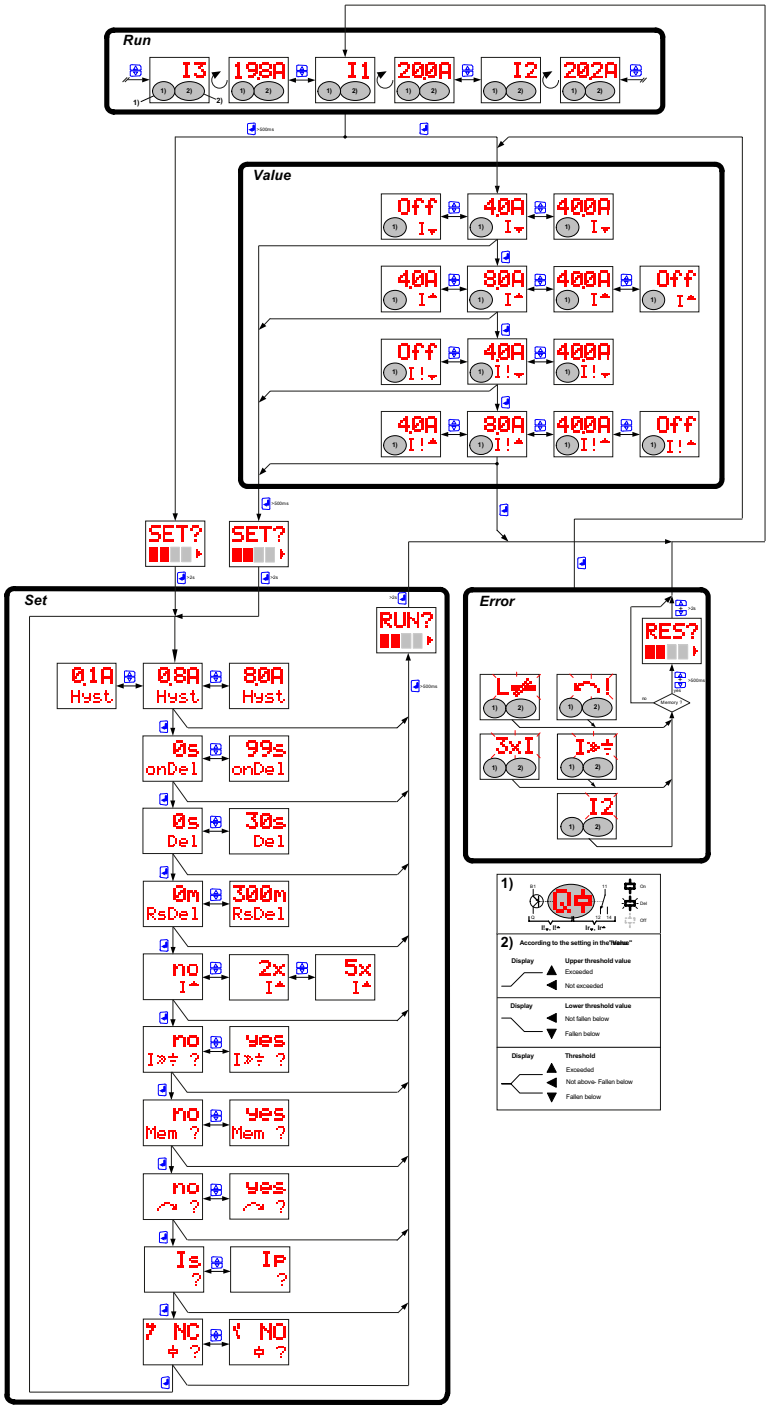

3RR2243 current monitoring relay

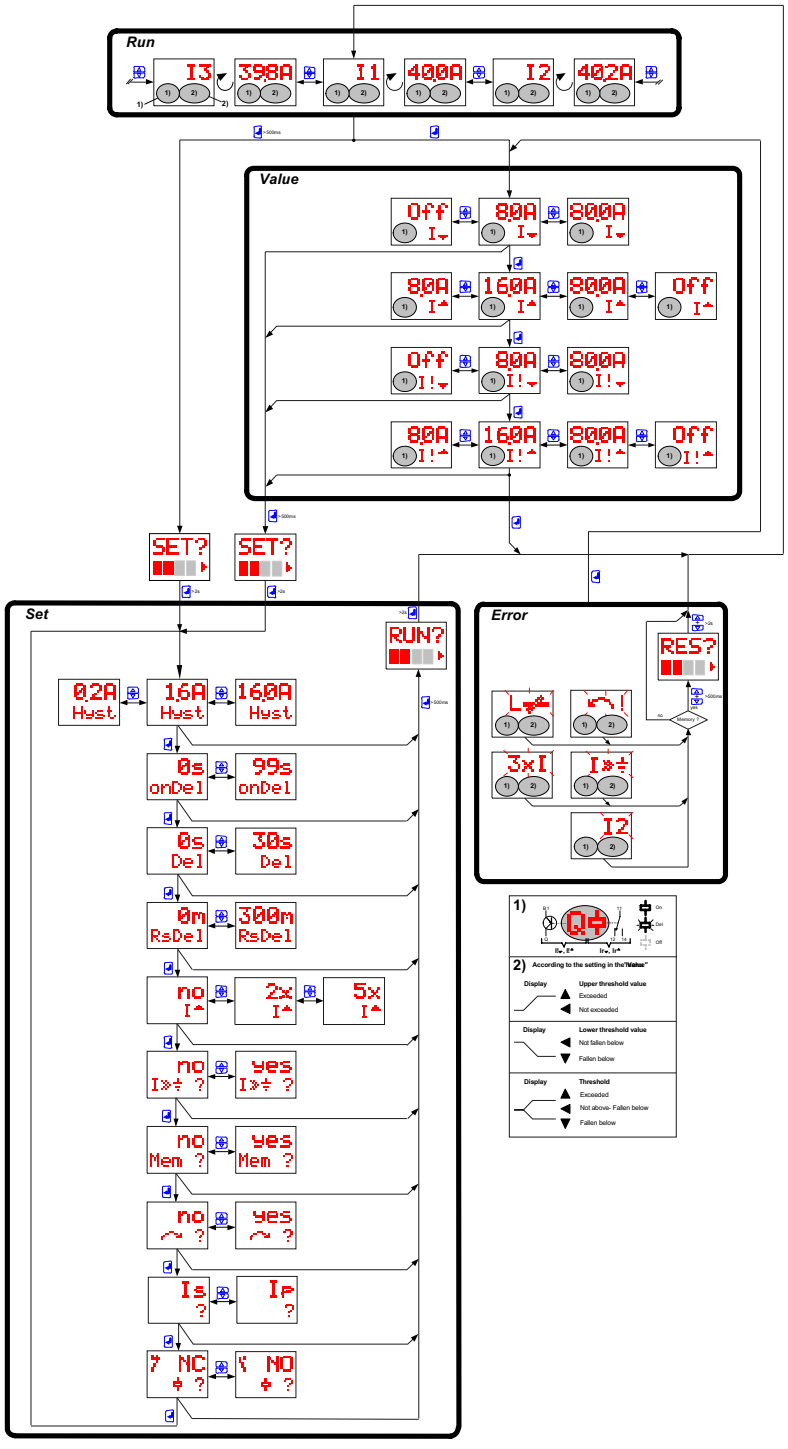

3UG4614 line monitoring relay

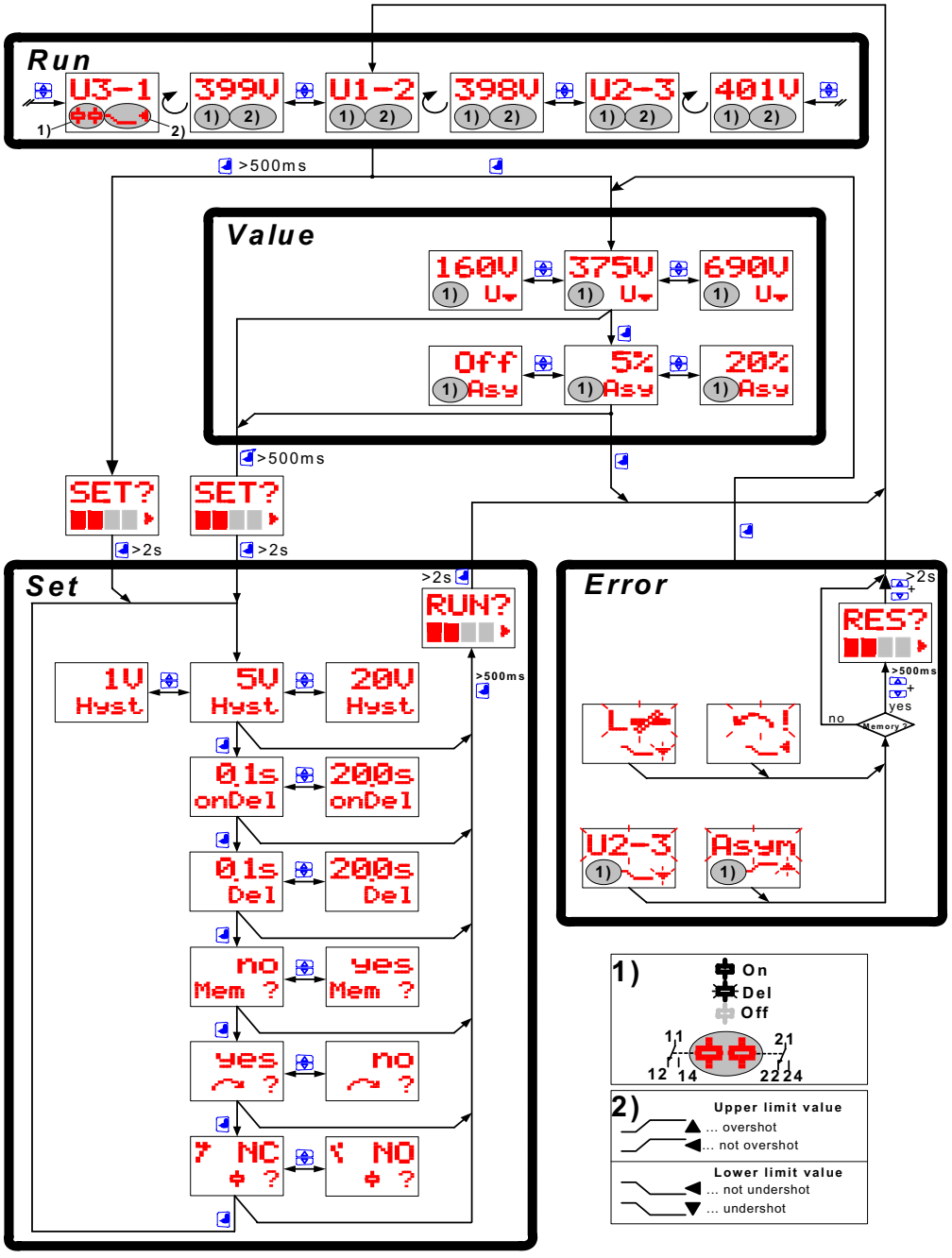

3UG4615 line monitoring relay

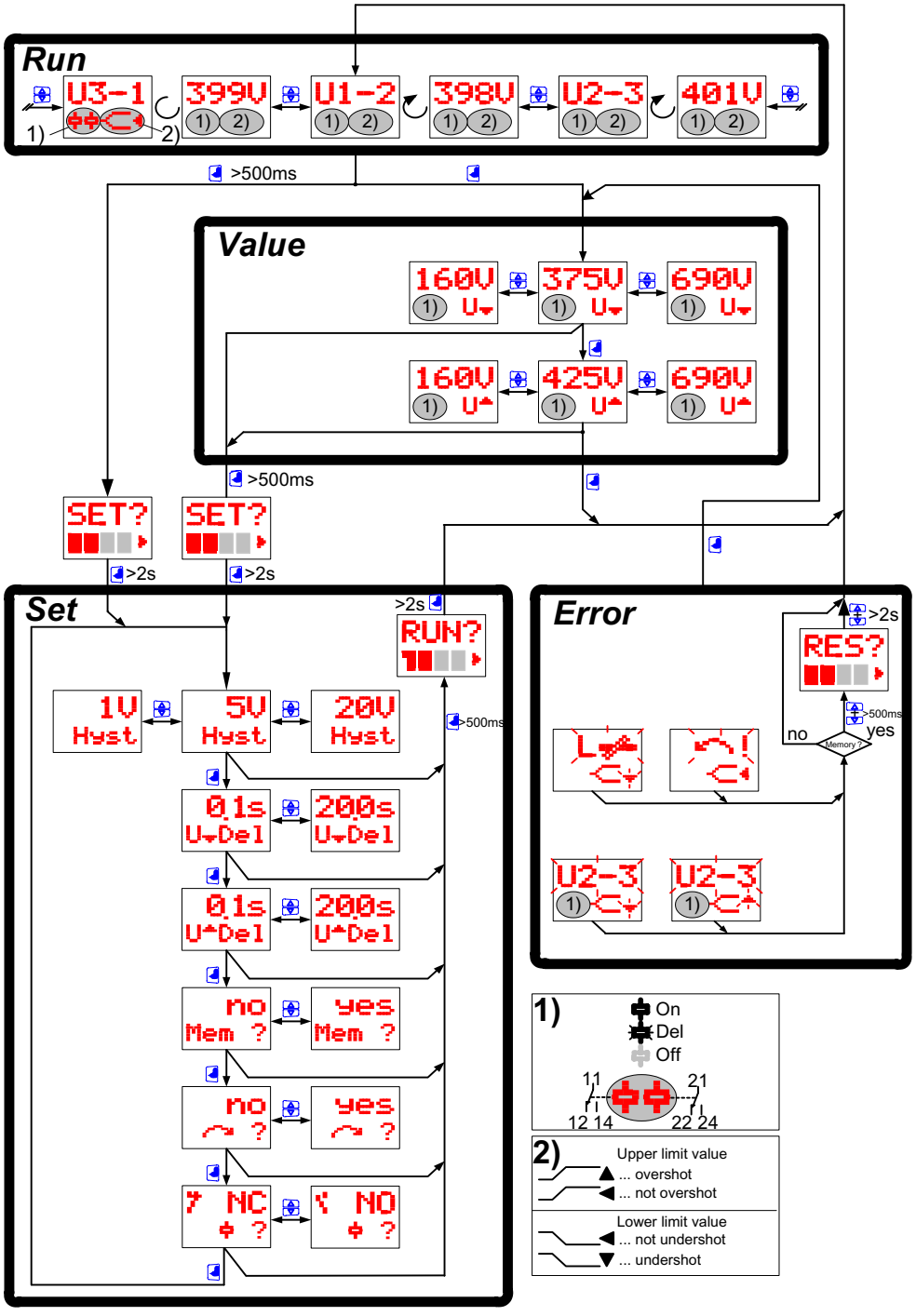

3UG4616 line monitoring relay

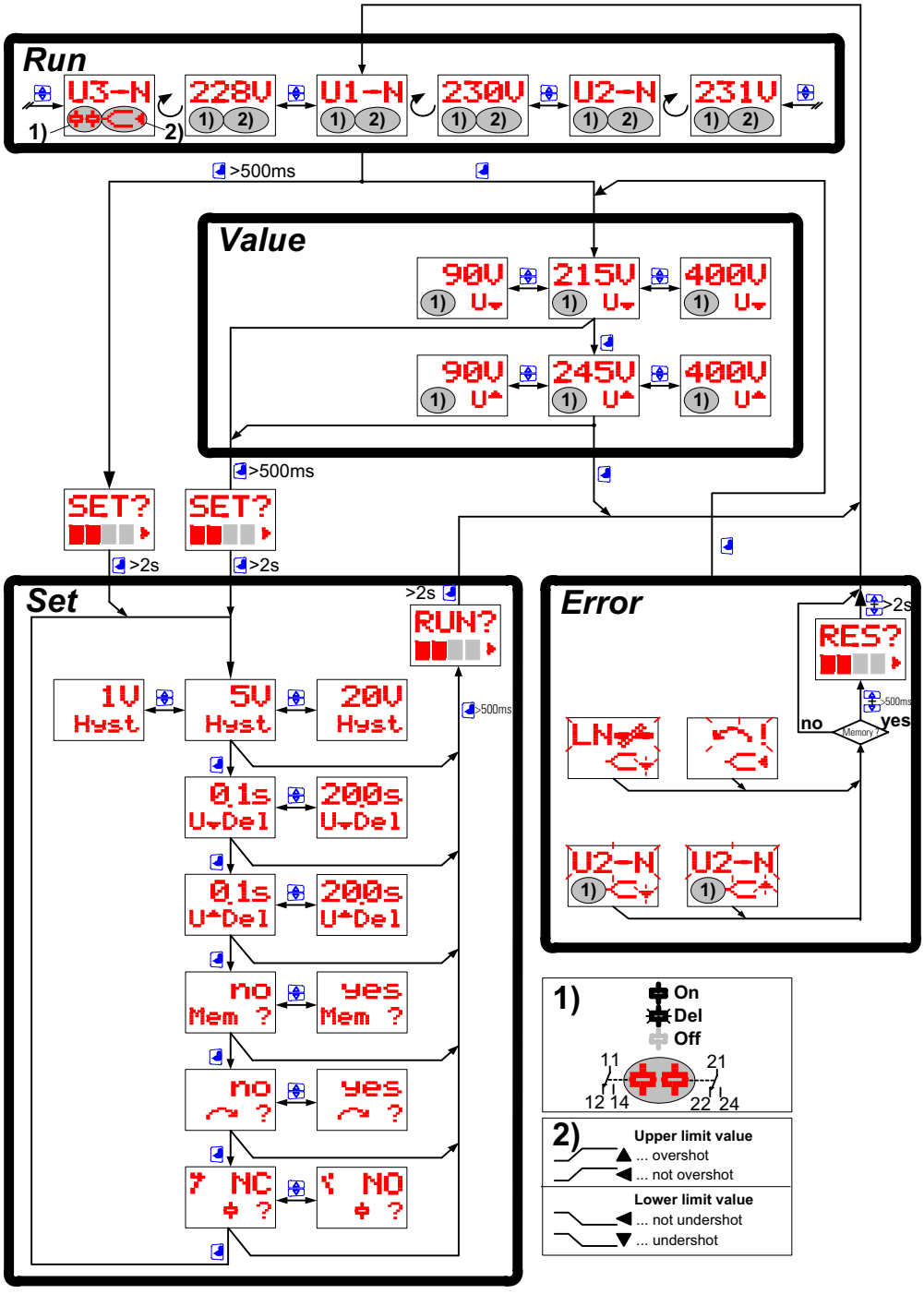

3UG4617 line monitoring relay

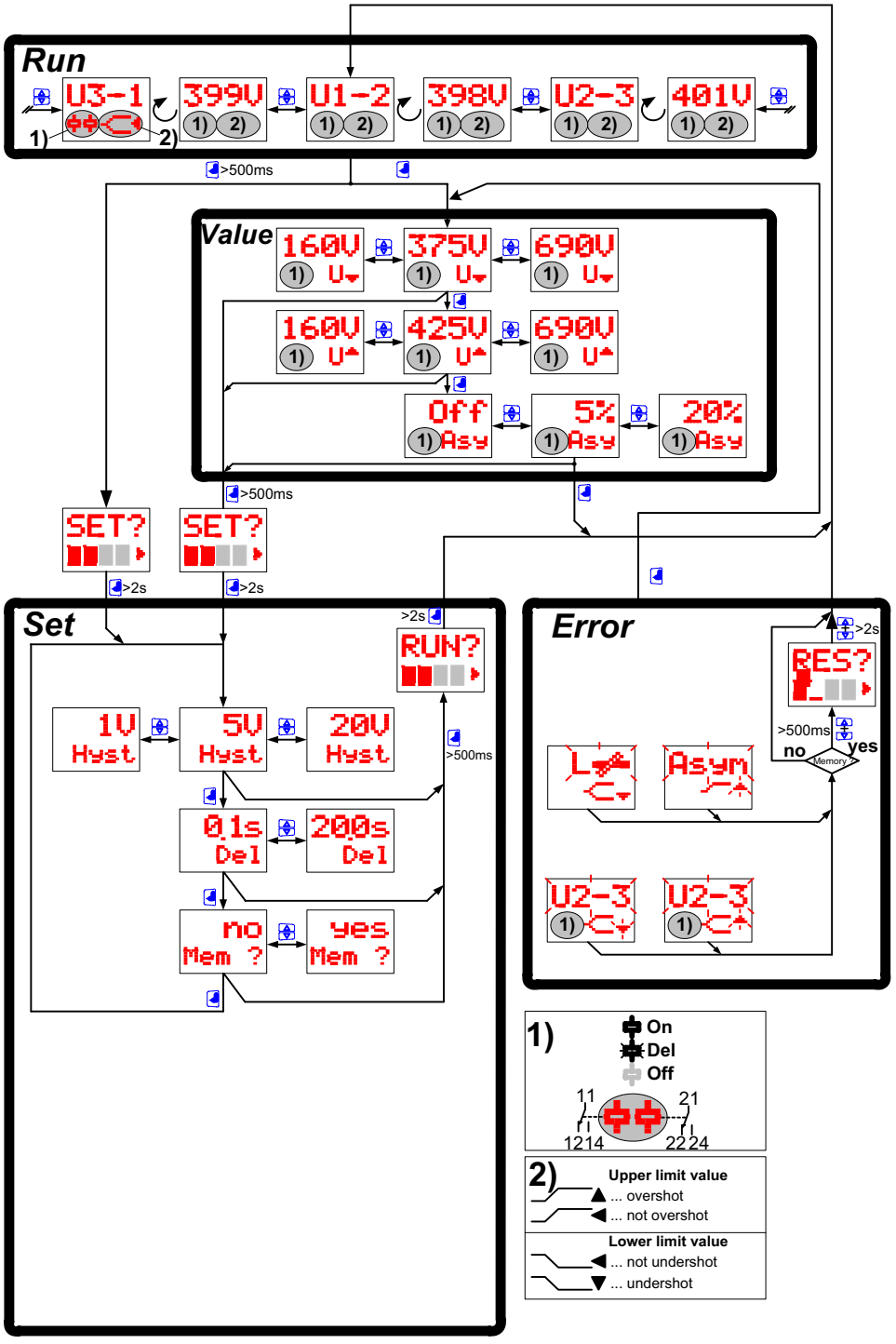

3UG4618 line monitoring relay

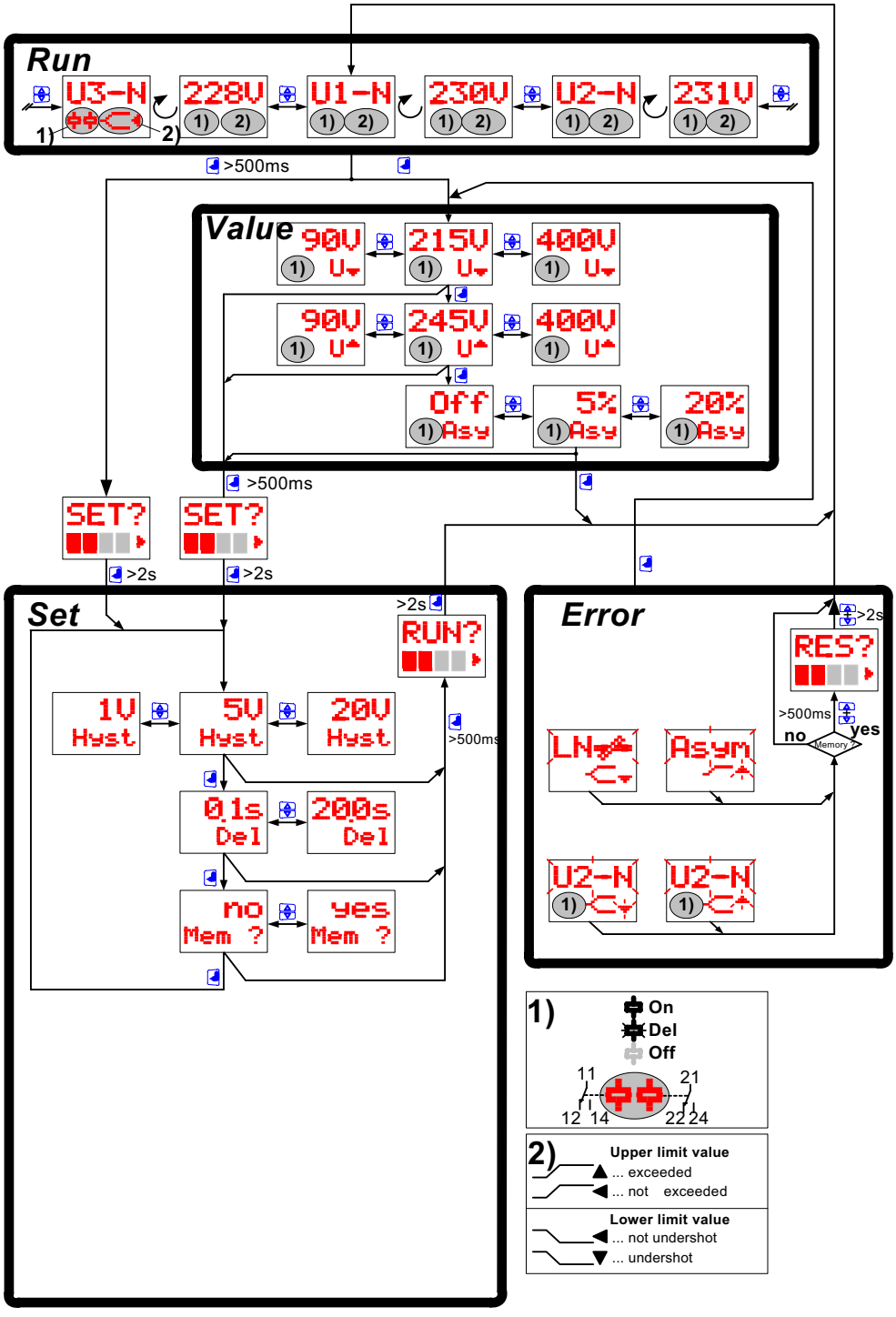

3UG4621 current monitoring relays

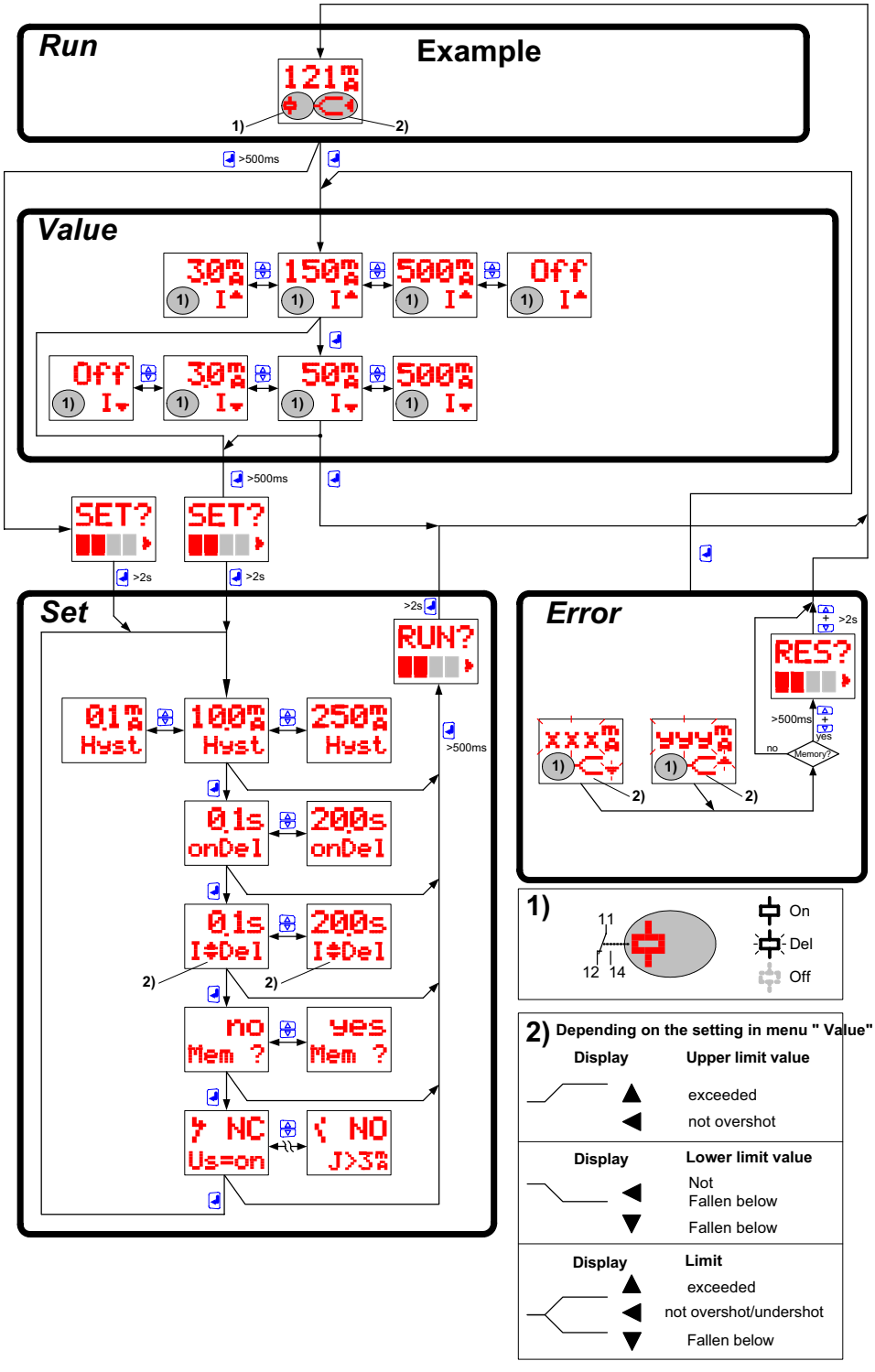

3UG4622 current monitoring relays

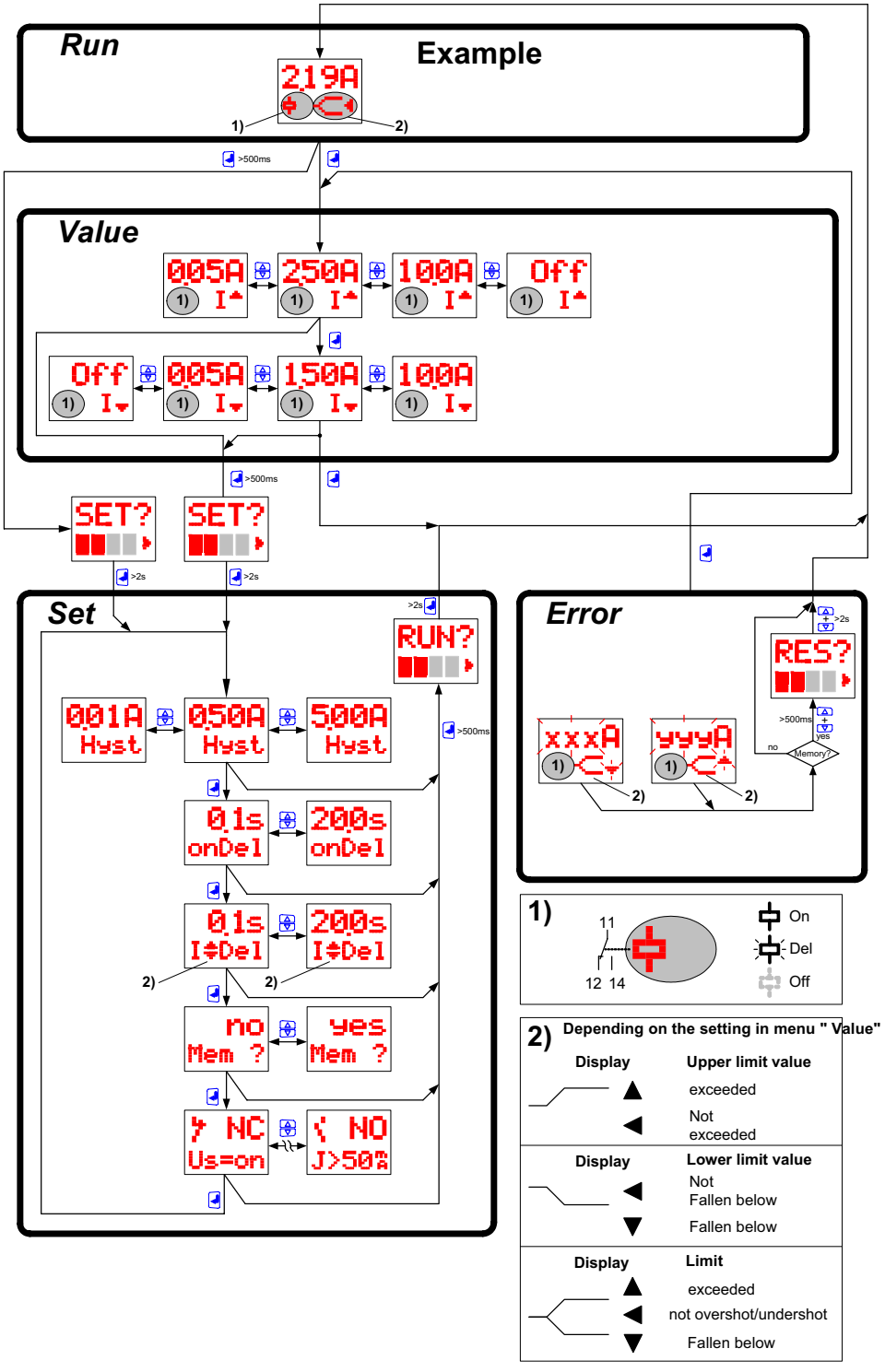

3UG4624 residual current monitoring relay

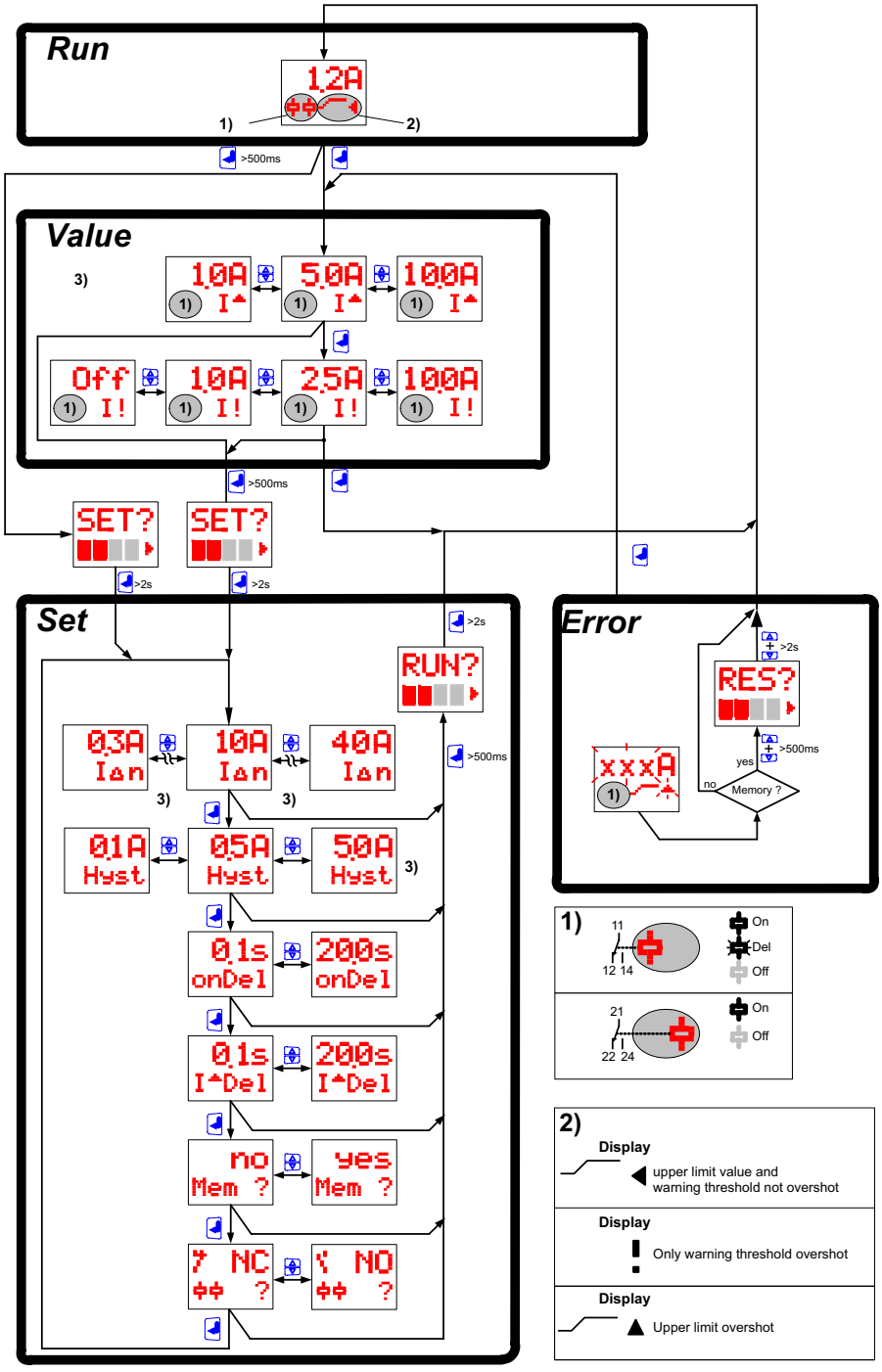

3UG4625 residual current monitoring relay

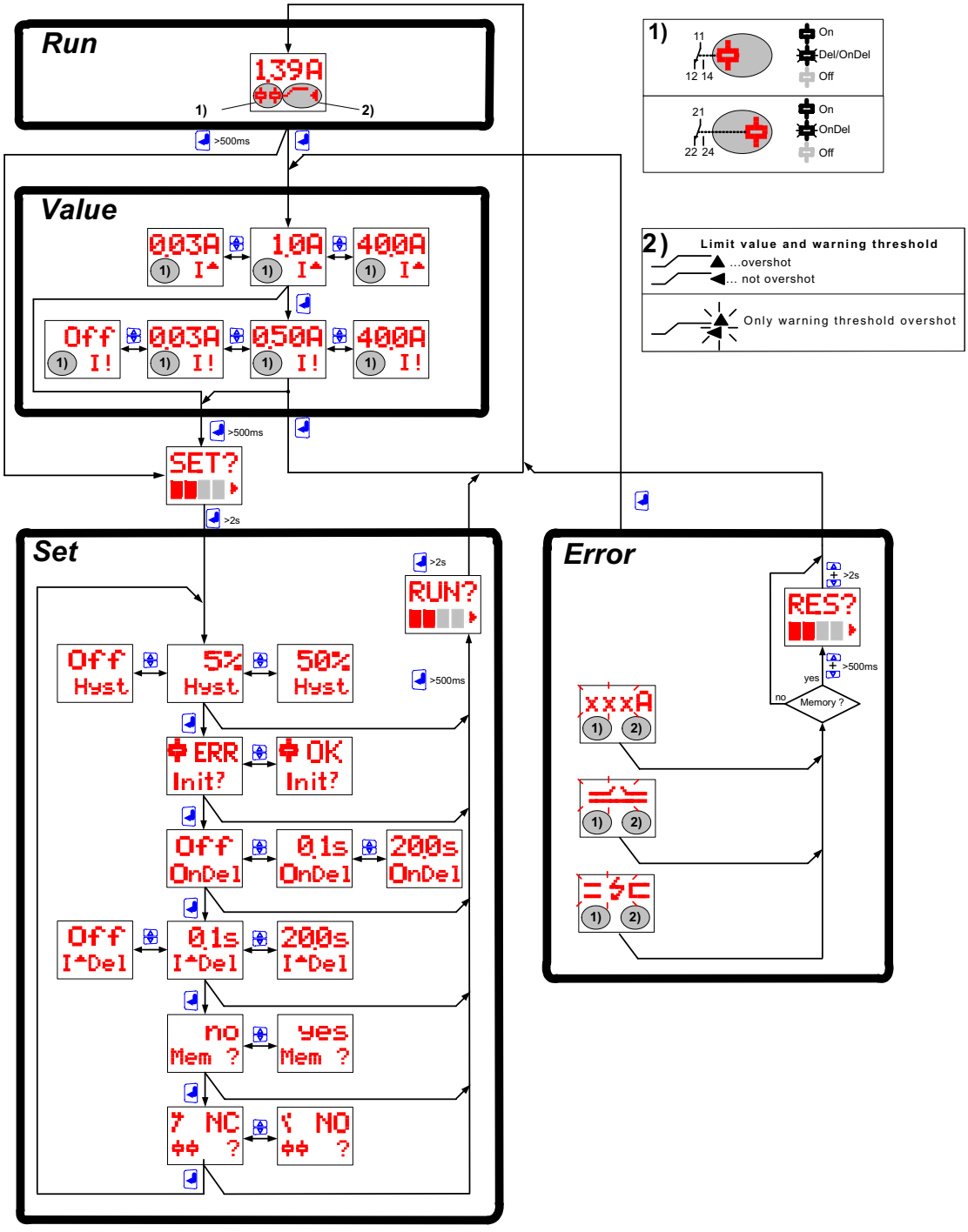

3UG4631 voltage monitoring relay

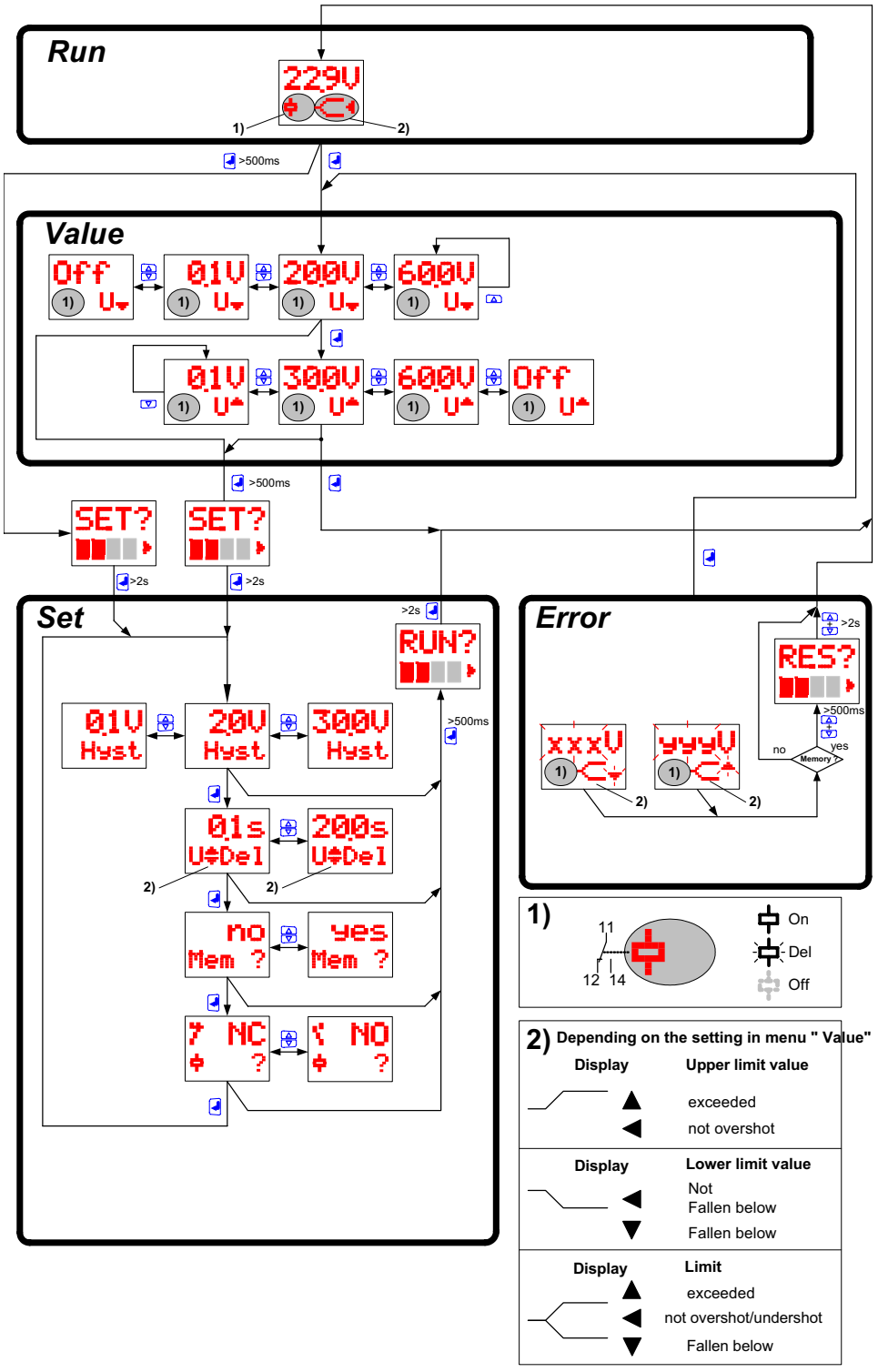

3UG4632 voltage monitoring relay

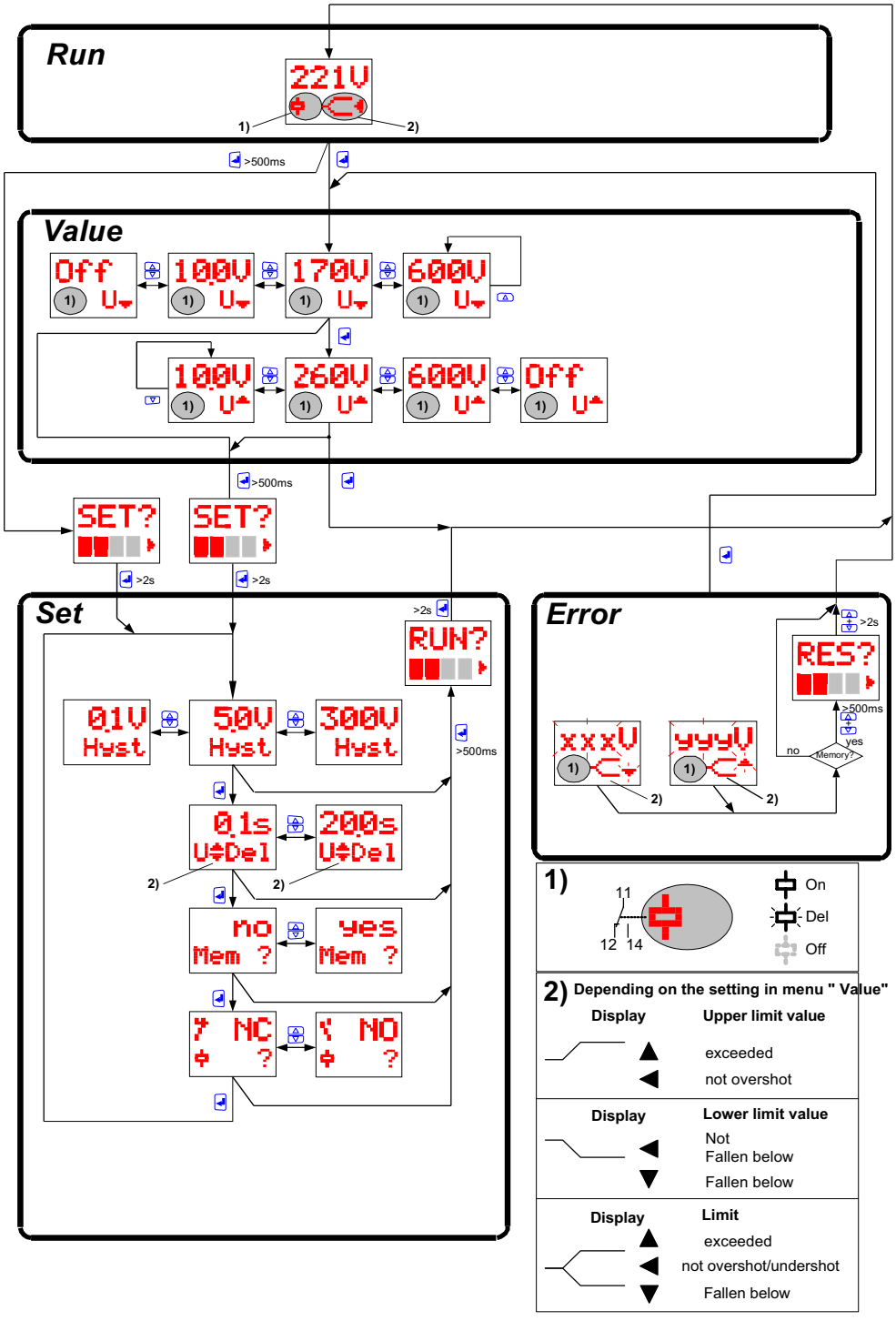

3UG4633 voltage monitoring relay

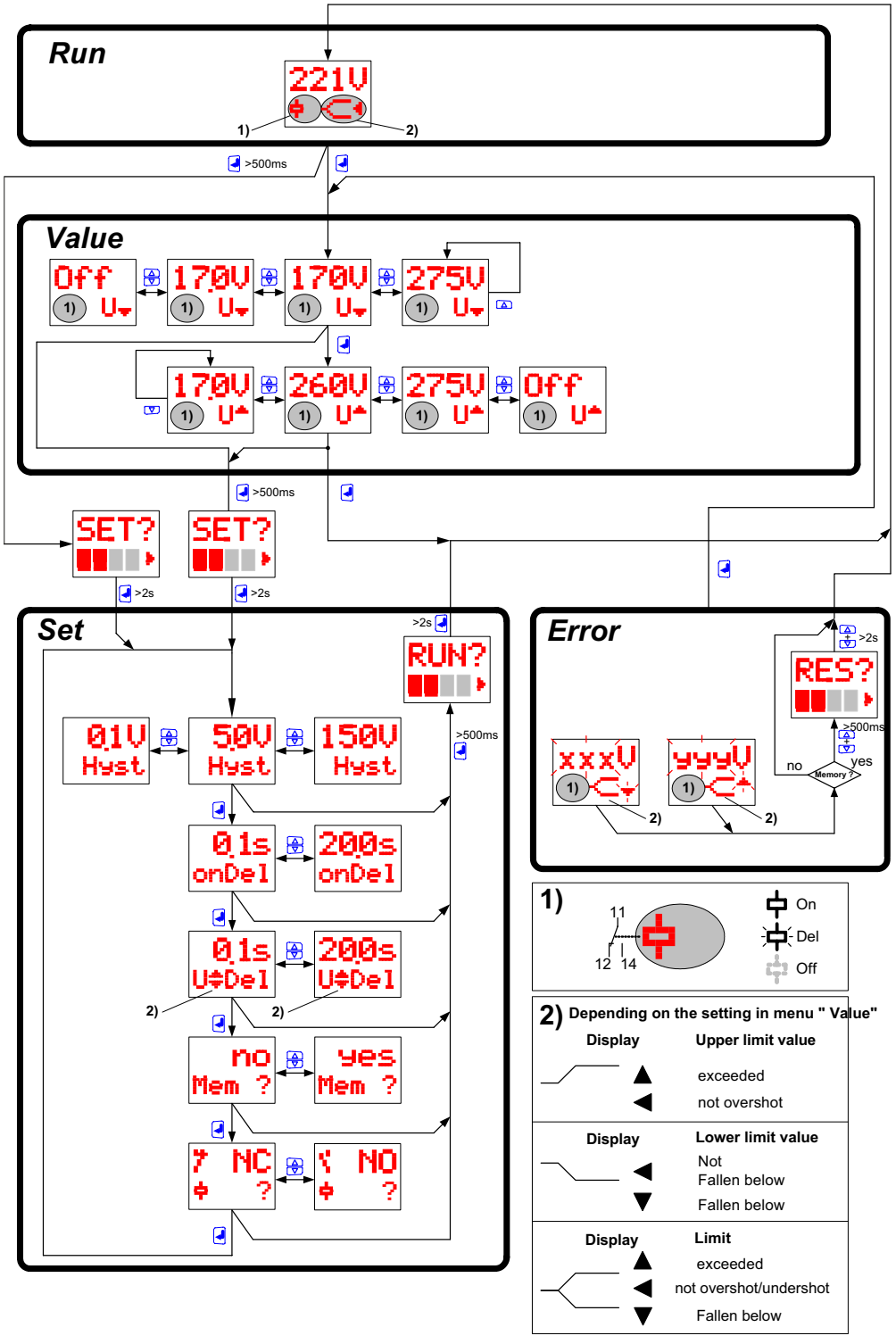

3UG4641 cos phi and active current monitoring relay

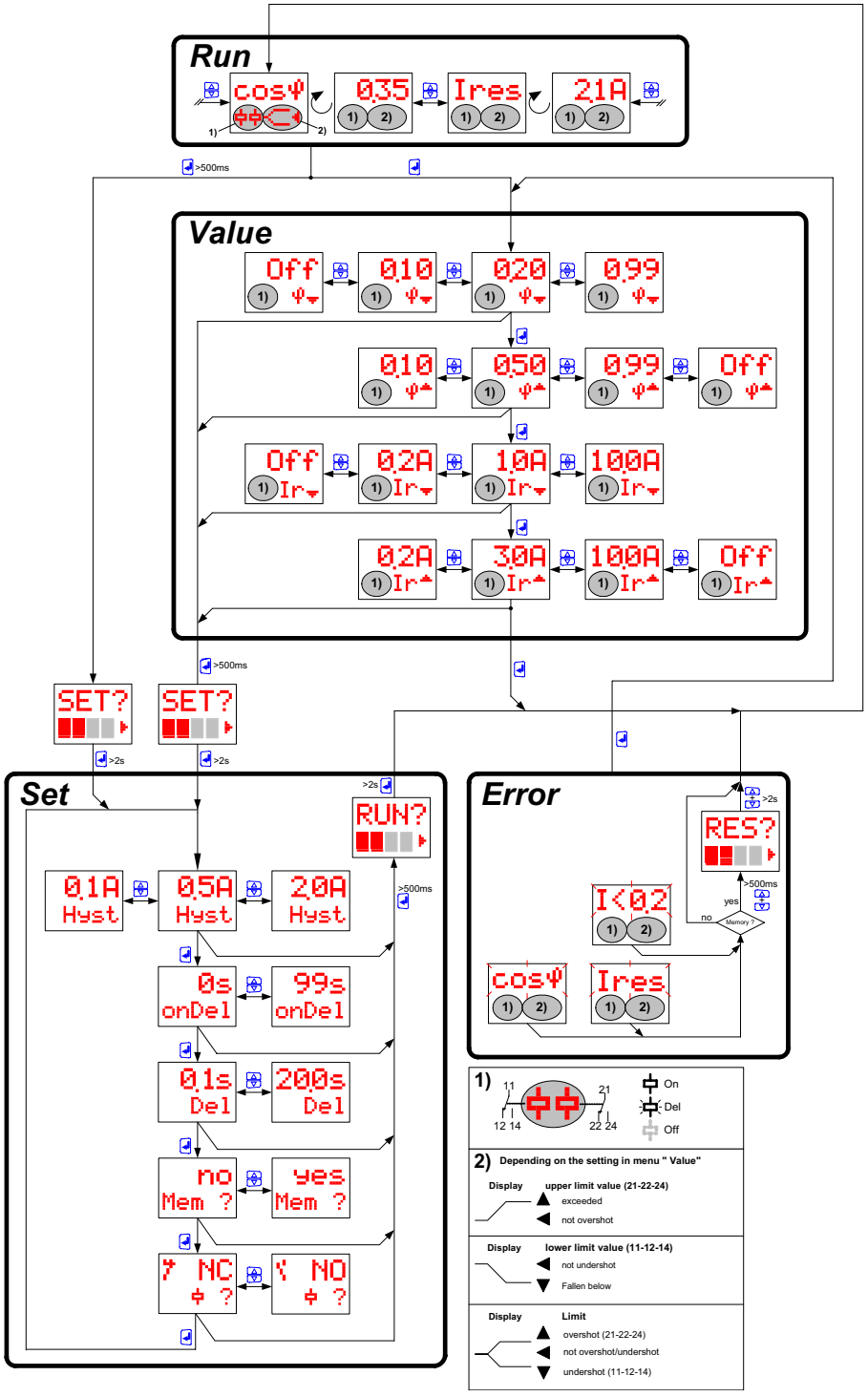

3UG4651 speed monitoring relay

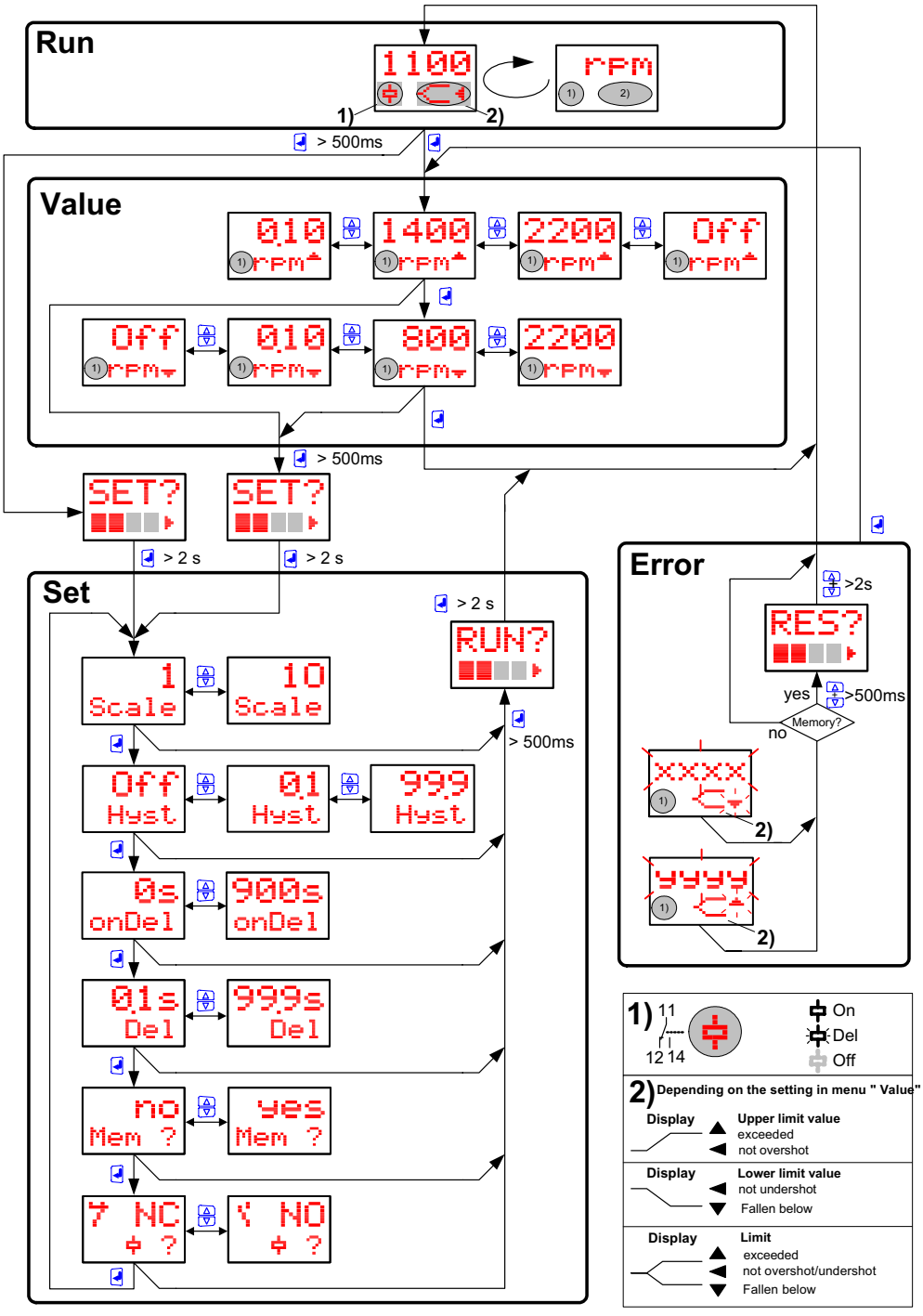

Index

2

2-wire AC system
    3UG4581-.AW3., 154
    3UG4582-.AW3., 182
    3UG4583-.CW3., 184
    3UG4583-.CW31 and 3UG4983-.AA01, 260
    3UG4583-1CW30 and 3UG4983-1A, 255
2-wire DC system
    3UG4582-.AW3., 182
    3UG4583-.CW3., 184
    3UG4583-.CW31 and 3UG4983-.AA01, 260
    3UG4583-1CW30 and 3UG4983-1A, 255

3

3UG4983 voltage reducer module, 171
3-wire AC system
    3UG4581-.AW3., 154
    3UG4582-.AW3., 182
    3UG4583-.CW3., 184
    3UG4583-.CW31 and 3UG4983-.AA01, 261
    3UG4583-1CW30 and 3UG4983-1A, 255
3-wire DC system
    3UG4582-.AW3., 182
    3UG4583-.CW3., 184
    3UG4583-.CW31 and 3UG4983-.AA01, 261
    3UG4583-1CW30 and 3UG4983-1A, 255

4

4-wire AC system
    3UG4581-.AW3., 155
    3UG4582-.AW3., 182
    3UG4583-.CW3., 184
    3UG4583-.CW31 and 3UG4983-.AA01, 261
    3UG4583-1CW30 and 3UG4983-1A, 255

A

Accessories - 3RR2 current monitoring relays
    Sealable cover, 227
    Terminal support for stand-alone assembly, 228, 230
Accessories - 3UG4 monitoring relays
    Push-in lugs, 232, 233
    Sealable cover, 231, 232, 251, 252
Accessories - Current monitoring relays 3RR2
    Sealable cover, 227
Active current, 271
Apparent current, 271
Application areas
    3RR2 current monitoring relays, 44
    3UG4.1 line monitoring relay, 74
    3UG4501 filling level monitoring relay, 65
    3UG4581/3UG4582/3UG4583 insulation monitoring relays, 142
    3UG4621/3UG4622 current monitoring relays, 113
    3UG4625 residual current monitoring relay, 125
    3UG4631/3UG4632/3UG4633 voltage monitoring relay, 191
    3UG4641 cos phi and active current monitoring relay, 205
    3UG4651 speed monitoring relay, 217
Application environment, 18
Approvals, 16
Automatic reset, 268

B

Basic knowledge, 9
Blocking current monitoring, 270

C

Cable break
    3RR21 current monitoring relays, 51
    3RR22 current monitoring relays, 58
Certifications, 16
Characteristics, 16
    Load limit curves 3UG4581, 156
    Load limit curves 3UG4582, 186
    Load limit curves 3UG4583, 188
Closed-circuit principle, 272
Cos phi monitoring
    3UG4641 cos phi and active current monitoring relay, 205
Current monitoring principle, 271

D

DataMatrix code, 11
Device replacement, 26
Diagnostics
3RR21 current monitoring relays, 54, 77
3RR22 current monitoring relays, 62
3UG4501 filling level monitoring relay, 70
3UG4512 line monitoring relay, 81
3UG4513 line monitoring relay, 87
3UG4581 insulation monitoring relay, 153
3UG4582/3UG4583 insulation monitoring relays, 181
3UG4614 line monitoring relay, 93
3UG4615 / 3UG4616 line monitoring relays, 100
3UG4617 / 3UG4618 line monitoring relays, 109
3UG4621/3UG4622 current monitoring relays, 120
3UG4625 residual current monitoring relay, 135
3UG4631/3UG4632/3UG4633 voltage monitoring relay, 199
3UG4641 cos phi and active current monitoring relay, 212
3UG4651 speed monitoring relay, 223
Display
3RR22 current monitoring relays, 60, 62
3UG4614 line monitoring relay, 92, 93
3UG4615 / 3UG4616 line monitoring relays, 99, 100
3UG4617 / 3UG4618 line monitoring relays, 108, 109
3UG4621/3UG4622 current monitoring relays, 119, 120
3UG4625 residual current monitoring relay, 134, 135
3UG4631/3UG4632/3UG4633 voltage monitoring relay, 198, 199
3UG4641 cos phi and active current monitoring relay, 211, 212
3UG4651 speed monitoring relay, 222, 223
Drainage control, 71, 272

E

Equipment features
3RR21 current monitoring relays, 49
3RR22 current monitoring relays, 56
3UG4501 filling level monitoring relay, 66
3UG4511 line monitoring relay, 75
3UG4512 line monitoring relay, 79
3UG4513 line monitoring relay, 84
3UG4581-1AW30 insulation monitoring relay, 145
3UG4581-1AW31 insulation monitoring relay, 146
3UG4581-2AW31 insulation monitoring relay, 147
3UG4582-1AW30 insulation monitoring relay, 159
3UG4582-1AW31 insulation monitoring relay, 160
3UG4582-2AW31 insulation monitoring relay, 161
3UG4583-1CW30 insulation monitoring relay, 162
3UG4583-1CW31 insulation monitoring relay, 164
3UG4583-2CW31 insulation monitoring relay, 166
3UG4614 line monitoring relay, 89
3UG4615 / 3UG4616 line monitoring relays, 96
3UG4617 / 3UG4618 line monitoring relays, 104
3UG4621/3UG4622 current monitoring relays, 114
3UG4625 residual current monitoring relay, 126
3UG4631 / 3UG4632 voltage monitoring relay, 192
3UG4633 voltage monitoring relay, 195
3UG4641 cos phi and active current monitoring relay, 206
3UG4651 speed monitoring relay, 218
3UG4983 voltage reducer module, 253
3UG4983-1AA01 voltage reducer module, 257
3UG4983-2AA01 voltage reducer module, 258

F

Front view
3RR21 current monitoring relays, 49
3RR22 current monitoring relays, 56
3UG4501 filling level monitoring relay, 66
3UG4511 line monitoring relay, 75
3UG4512 line monitoring relay, 79
3UG4513 line monitoring relay, 84
3UG4581-1AW30 insulation monitoring relay, 145
3UG4581-1AW31 insulation monitoring relay, 146
3UG4581-2AW31 insulation monitoring relay, 147
3UG4582-1AW30 insulation monitoring relay, 159

3UG4582-1AW31 insulation monitoring relay, 160
3UG4582-2AW31 insulation monitoring relay, 161
3UG4583-1CW30 insulation monitoring relay, 162
3UG4583-1CW31 insulation monitoring relay, 164
3UG4583-2CW31 insulation monitoring relay, 166
3UG4614 line monitoring relay, 89
3UG4615 / 3UG4616 line monitoring relays, 96
3UG4617 / 3UG4618 line monitoring relays, 104
3UG4621/3UG4622 current monitoring relays, 114
3UG4625 residual current monitoring relay, 126
3UG4631 / 3UG4632 voltage monitoring relay, 192
3UG4633 voltage monitoring relay, 195
3UG4641 cos phi and active current monitoring relay, 206
3UG4651 speed monitoring relay, 218
3UG4983 voltage reducer module, 253
3UG4983-1AA01 voltage reducer module, 257
3UG4983-2AA01 voltage reducer module, 258

H

Hysteresis, 269

I

Incorrect settings
3UG458. insulation monitoring relay., 141
Inflow control, 71, 272
Installation altitude, 18
Insulation monitoring
3UG4581/3UG4582/3UG4583 insulation monitoring relays, 142

M

Manual RESET, 268
Manuals, 264
Memory function, 149, 169
Menu navigation, 38, 40
Menu-based operation, 37
Minimum clearance
3RR2 current monitoring relays, 27
Mounting
DIN rail, 3UG458.-.AW31 / 3UG4583-.CW31 monitoring relay, 34
DIN rail, 3UG4983 voltage reducer module, 253
DIN rail, 3UG4983-.AA01 voltage reducer module, 259
Screw mounting, 3RR2 current monitoring relay, 28
Screw mounting, 3UG4 monitoring relay, 32
Standard rail, 3UG4 monitoring relay, 33
Standard rail, 3UG458. monitoring relay., 33
Mounting position, 32
3RR2 current monitoring relays, 27

N

Nominal fault current of the summation current transformer, 270
Nominal line voltage, 265

O

ON-delay time, 266
One-point monitoring
3UG4501 filling level monitoring relay, 68
Open circuit
3UG458. insulation monitoring relay., 141
Open-circuit principle, 272
Operating conditions, 18
Operating instructions, 263
Operator controls, 37
Overcurrent
3UG4621/3UG4622 current monitoring relays, 113
3UG4641 cos phi and active current monitoring relay, 205
Overvoltage
3UG4.1 line monitoring relay, 73, 74
3UG4631/3UG4632/3UG4633 voltage monitoring relay, 191

P

Parameters for
3RR21 current monitoring relay, analog, 53
3UG4501 filling level monitoring relay, 70
3UG4513 line monitoring relay, 86
3UG4581 insulation monitoring relay, 152
3UG4582/3UG4583 insulation monitoring relays, 177
3UG4614 line monitoring relay, 92

3UG4615 / 3UG4616 line monitoring relays, 99
3UG4617 / 3UG4618 line monitoring relays, 108
3UG4621/3UG4622 current monitoring relays, 119
3UG4625 residual current monitoring relay, 134
3UG463. voltage monitoring relay, 198
3UG4641 cos phi and active current monitoring relay, 211
3UG4651 speed monitoring relay, 222
Current monitoring relay 3RR22, digital, 61
Phase asymmetry
3UG4.1 line monitoring relay, 73, 74
Phase failure
3UG4.1 line monitoring relay, 73, 74
Phase failure monitoring, 274
Phase sequence
3UG4.1 line monitoring relay, 73, 74
Phase sequence monitoring, 270
Probes
3UG4501 filling level monitoring relay, 67
Push-in lugs, 232, 233

R

Reference, 263
Relay switching behavior, 272
Removable terminals, 26
Reset response, 268
Residual current monitoring, 270
Residual current transformer
3UG4625 residual current monitoring relay, 130, 235
Resistance to extreme climates, 18
Restart delay time, 269
rms value, 37

S

Scaling factor, 273
Scope of validity
Manual, 9
Screw mounting
3UG4 monitoring relay, 32
Screw-type connection, 20
Screw-type connection system
Connection cross-sections, 19
Screw-type connections, 18
Sealable cover, 231, 232, 251, 252
3RR2 current monitoring relays, 227
Sensor sensitivity, 272
Setting, 37
Snap-on mounting
3UG4 monitoring relay, 33
3UG458. monitoring relay., 33
3UG458.-.AW31 / 3UG4583-.CW31 monitoring relay, 34
3UG4983 voltage reducer module, 253
3UG4983-.AA01 voltage reducer module, 259
Speed overshoot
3UG4651 speed monitoring relay, 217
Speed undershoot
3UG4651 speed monitoring relay, 217
Spring-loaded connection
3RR2 current monitoring relays, 22
Spring-loaded connection system, 21, 25
Connection cross-sections, 24
Spring-loaded connection technology
Connection cross-sections, 25
Stabilization delay, 273
Standards, 13
Summation current transformers
3UG4624 residual current monitoring relay, 234

T

Terminal support for stand-alone assembly
3RR2 current monitoring relays, 228, 230
Test certificates, 16
Threshold for overshoot, 267
Threshold for undershoot, 267
Tripping delay time, 265
tRMS, 37
True root mean square measurement, 37
Two-point monitoring
3UG4501 filling level monitoring relay, 68

U

Undercurrent
3UG4621/3UG4622 current monitoring relays, 113
3UG4641 cos phi and active current monitoring relay, 205
Undervoltage
3UG4.1 line monitoring relay, 73, 74
3UG4631/3UG4632/3UG4633 voltage monitoring relay, 191

V

Voltage asymmetry, 265
Voltage reducer module, 252, 257, 258

W

Warning threshold for overshoot, 267
Warning threshold for undershoot, 267
Wire-break monitoring
    3UG4621/3UG4622 current monitoring relays, 113