SIEMENS

# SIMATIC NET

# Industrial Ethernet Switches SCALANCE X-200

Operating Instructions


Preface

Functions 1

Description of the device 2

Safety notices 3

Installation 4

Connecting up 5

Approvals 6

Technical specifications 7

Dimension drawings A

Test of mechanical stability B

Training, Service & Support C



05/2015

C79000-G8976-C284-07

# Legal information

## Warning notice system

This manual contains notices you have to observe in order to ensure your personal safety, as well as to prevent damage to property. The notices referring to your personal safety are highlighted in the manual by a safety alert symbol, notices referring only to property damage have no safety alert symbol. These notices shown below are graded according to the degree of danger.

**⚠ DANGER**

indicates that death or severe personal injury **will** result if proper precautions are not taken.

**⚠ WARNING**

indicates that death or severe personal injury **may** result if proper precautions are not taken.

**⚠ CAUTION**

indicates that minor personal injury can result if proper precautions are not taken.

**NOTICE**

indicates that property damage can result if proper precautions are not taken.

If more than one degree of danger is present, the warning notice representing the highest degree of danger will be used. A notice warning of injury to persons with a safety alert symbol may also include a warning relating to property damage.

## Qualified Personnel

The product/system described in this documentation may be operated only by **personnel qualified** for the specific task in accordance with the relevant documentation, in particular its warning notices and safety instructions. Qualified personnel are those who, based on their training and experience, are capable of identifying risks and avoiding potential hazards when working with these products/systems.

## Proper use of Siemens products

Note the following:

**⚠ WARNING**

Siemens products may only be used for the applications described in the catalog and in the relevant technical documentation. If products and components from other manufacturers are used, these must be recommended or approved by Siemens. Proper transport, storage, installation, assembly, commissioning, operation and maintenance are required to ensure that the products operate safely and without any problems. The permissible ambient conditions must be complied with. The information in the relevant documentation must be observed.

## Trademarks

All names identified by ® are registered trademarks of Siemens AG. The remaining trademarks in this publication may be trademarks whose use by third parties for their own purposes could violate the rights of the owner.

## Disclaimer of Liability

We have reviewed the contents of this publication to ensure consistency with the hardware and software described. Since variance cannot be precluded entirely, we cannot guarantee full consistency. However, the information in this publication is reviewed regularly and any necessary corrections are included in subsequent editions.

Siemens AG
Division Process Industries and Drives
Postfach 48 48
90026 NÜRNBERG
GERMANY

C79000-G8976-C284-07
℗ 05/2015 Subject to change

Copyright © Siemens AG 2012 - 2015.
All rights reserved

# Preface

## Components of the product

The following components are supplied with a **SCALANCE X-200** IE switch:

- One device
- One 2-pin plug-in terminal block
- One 4-pin plug-in terminal block
- One DVD (configuration manual, operating instructions, Primary Setup Tool, GSD file, SNMP OPC profile)

The following components are supplied with a **SCALANCE X-200** IE switch with the **PRO** supplement:

- One device
- Protective caps for the data interfaces
- Protective caps for the connectors of the power supply
- One protective cap for the signaling contact
- One DVD (configuration manual, operating instructions, Primary Setup Tool, GSD file, SNMP OPC profile)

## Unpacking, checking

**WARNING**

Do not use any parts that show evidence of damage. If you use damaged parts, there is no guarantee that the device will function according to the specification.

If you use damaged parts, this can lead to the following problems:

- Injury to persons
- Loss of the approvals
- Violation of the EMC regulations

Use only undamaged parts.

1. Make sure that the package is complete.
2. Check all the parts for transport damage.

If the consignment is incomplete or damaged, contact your supplier or your local Siemens office.

## Purpose of the Operating Instructions

These operating instructions support you when commissioning networks with the devices of the product line SCALANCE X-200.

## Overview of the technical documentation of the IE Switches X-200

The technical documentation of the X-200 product line is divided into hardware and software and can be found in the following documents:

- **PH SCALANCE X-200 configuration manual**

  Software description of the X-200 product line

- **SCALANCE X-200 BA Operating Instructions**

  Hardware description for all product groups and general information.

You will find the documents here:

- On the data medium that ships with some products:
  - Product CD / product DVD
  - SIMATIC NET Manual Collection
- On the Internet pages of Siemens Industry Online Support (http://support.automation.siemens.com/WW/view/en/33118791/133300).

## Validity of the Operating Instructions

These operating instructions are valid for the following devices:

| SCALANCE X200 and SCALANCE XF200 | |
|---|---|
| Product name: | Order number: |
| X204-2 | 6GK5 204-2BB10-2AA3 |
| X204-2TS | 6GK5 204-2BB10-2CA2 |
| X204-2FM | 6GK5 204-2BB11-2AA3 |
| X204-2LD | 6GK5 204-2BC10-2AA3 |
| X204-2LD TS | 6GK5 204-2BC10-2CA2 |
| X206-1 | 6GK5 206-1BB10-2AA3 |
| X206-1LD | 6GK5 206-1BC10-2AA3 |
| X208 | 6GK5 208-0BA10-2AA3 |
| X208PRO | 6GK5 208-0HA10-2AA6 |
| X212-2 | 6GK5 212-2BB00-2AA3 |
| X212-2LD | 6GK5 212-2BC00-2AA3 |
| X216 | 6GK5 216-0BA00-2AA3 |
| X224 | 6GK5 224-0BA00-2AA3 |
| Flat design: | |
| XF204 | 6GK5 204-0BA00-2AF2 |
| XF204-2 | 6GK5 204-2BC00-2AF2 |

| SCALANCE X200 and SCALANCE XF200 | |
|---|---|
| XF206-1 | 6GK5 206-1BC00-2AF2 |
| XF208 | 6GK5 208-0BA00-2AF2 |

| SCALANCE X200IRT and XF200IRT | |
|---|---|
| Product name: | Order number: |
| X200-4P IRT | 6GK5 200-4AH00-2BA3 |
| X201-3P IRT | 6GK5 201-3BH00-2BA3 |
| X201-3P IRT PRO | 6GK5 201-3JR00-2BA6 |
| X202-2IRT | 6GK5 202-2BB00-2BA3 |
| X202-2P IRT | 6GK5 202-2BH00-2BA3 |
| X202-2P IRT PRO | 6GK5 202-2JR00-2BA6 |
| X204IRT | 6GK5 204-0BA00-2BA3 |
| X204IRT PRO | 6GK5 204-0JA00-2BA6 |
| Flat design: | |
| XF204IRT | 6GK5 204-0BA00-2BF2 |

## Purpose

The SCALANCE X-200 devices are switches for setting up Ethernet networks for industrial applications.

### Restricted area of application according to Hazardous Locations (HazLoc)

The devices are only suitable for use in the following areas:

- In areas according to Class I, Division 2, Groups A, B, C and D and in areas without explosive atmospheres.
- In areas according to Class I, Zone 2 Groups IIC and in areas without explosive atmospheres.

## Names of the devices in these operating instructions

Unless mentioned otherwise, the descriptions in these operating instructions refer to all devices of the SCALANCE X-200 product line named above in the section on Validity.

In the remainder of the instructions, these will also be referred to as **IE switches** or also simply as **X-200**.

## Further documentation

In the system manuals "Industrial Ethernet / PROFINET Industrial Ethernet" and "Industrial Ethernet / PROFINET passive network components", you will find information on other SIMATIC NET products that you can operate along with the devices of this product line in an Industrial Ethernet network.

You will find the system manuals on the Internet pages of Siemens Industry Online Support under the following entry IDs:

- 27069465 (http://support.automation.siemens.com/WW/view/en/27069465)
  Industrial Ethernet / PROFINET Industrial Ethernet System Manual
- 84922825 (http://support.automation.siemens.com/WW/view/en/84922825)
  Industrial Ethernet / PROFINET - Passive network components System Manual

## Finding information

To help orientation, there is not only a table of contents but also an Index in the Appendix.

The SIMATIC NET Glossary also provides additional help, see below.

## Audience

These operating instructions are intended for persons involved in commissioning networks in which IE switches are used.

## SIMATIC NET Selection Tool

The SIMATIC NET selection tool supports you when selecting Industrial Ethernet switches and components for Industrial Wireless Communication. You will find current information on the Product Support pages under the following entry ID:

39134641 (http://support.automation.siemens.com/WW/view/en/39134641)

## Where to find Siemens documentation

- Article numbers

  You will find the article numbers for the Siemens products of relevance here in the following catalogs:

  – SIMATIC NET - Industrial Communication / Industrial Identification, catalog IK PI

  – SIMATIC - Products for Totally Integrated Automation and Micro Automation, catalog ST 70

  You can request the catalogs and additional information from your Siemens representative. You will also find the product information in the Siemens Industry Mall at the following address:

  (https://mall.industry.siemens.com)

- Manuals on the Internet

  You will find SIMATIC NET manuals on the Internet pages of Siemens Industry Online Support:

  Link to Customer Support (http://support.automation.siemens.com/WW/view/en)

  Enter the entry ID of the relevant manual as the search item. The entry ID is specified in the references.

  As an alternative, you will find the SIMATIC NET documentation on the pages of Product Support:

  10805878 (http://support.automation.siemens.com/WW/view/en/10805878)

  Go to the required product group and make the following settings:

  "Entry list" tab, Entry type "Manuals / Operating Instructions"

- Manuals on the data medium

  You will often find manuals of SIMATIC NET products on the data medium that ships with many of the SIMATIC NET products.

## Security information

Siemens provides products and solutions with industrial security functions that support the secure operation of plants, solutions, machines, equipment and/or networks. They are important components in a holistic industrial security concept. With this in mind, Siemens' products and solutions undergo continuous development. Siemens recommends strongly that you regularly check for product updates.

For the secure operation of Siemens products and solutions, it is necessary to take suitable preventive action (e.g. cell protection concept) and integrate each component into a holistic, state-of-the-art industrial security concept. Third-party products that may be in use should also be considered. For more information about industrial security, visit http://www.siemens.com/industrialsecurity.

To stay informed about product updates as they occur, sign up for a product-specific newsletter. For more information, visit http://support.automation.siemens.com.

## SIMATIC NET glossary

Explanations of many of the specialist terms used in this documentation can be found in the SIMATIC NET glossary.

You will find the SIMATIC NET glossary here:

- SIMATIC NET Manual Collection or product DVD

  The DVD ships with certain SIMATIC NET products.

- On the Internet under the following entry ID:

  50305045 (http://support.automation.siemens.com/WW/view/en/50305045)

## Trademarks

The following and possibly other names not identified by the registered trademark sign ® are registered trademarks of Siemens AG:

SIMATIC NET, SCALANCE, C-PLUG, OLM

# Table of contents


Preface ..... 3

1 Functions ..... 11

2 Description of the device ..... 15

2.1 Device views ..... 15

2.2 Accessories ..... 17

2.3 The LEDs ..... 19
2.3.1 LED display when the device starts up ..... 19
2.3.2 Power LED "L" (green/yellow LED) ..... 19
2.3.3 Fault LED "F" (yellow/red LED) ..... 20
2.3.4 Redundancy manager LED "RM" (green LED) ..... 21
2.3.5 Standby LED "RM" (yellow LED) ..... 21
2.3.6 Port LEDs "P" (green/yellow LEDs) ..... 22
2.3.7 Diagnostics LEDs for optical connectors "F" (yellow LED) ..... 22
2.3.8 Show Location ..... 22

2.4 The SET button ..... 23

2.5 The C-PLUG ..... 24

3 Safety notices ..... 29

3.1 Safety notices in general ..... 29

3.2 Safety notices for hazardous areas ..... 31

3.3 Security recommendations ..... 32

4 Installation ..... 35

4.1 Safety notices for installation ..... 35

4.2 Installation options ..... 38

4.3 Installation on a DIN rail ..... 39

4.4 Installation on a standard rail ..... 40

4.5 Wall mounting ..... 41

5 Connecting up ..... 43

5.1 Safety when connecting up ..... 43

5.2 Power supply ..... 46
5.2.1 Power supply via terminal block ..... 46
5.2.2 Supply for X208PRO ..... 47
5.2.3 Supply for IRT-PRO devices ..... 47

5.3 Grounding ..... 50

5.4 Signaling contact ..... 51

5.5 Attachment to Industrial Ethernet ... 53
5.5.1 Electrical connections ... 54
5.5.1.1 Electrical attachments to Industrial Ethernet ... 54
5.5.1.2 Electrical connectors of the X208PRO ... 56
5.5.2 Optical attachments to Industrial Ethernet ... 57
5.5.2.1 Multimode fiber-optic cable ... 57
5.5.2.2 Single mode fiber-optic cable ... 58
5.5.2.3 POF and PCF cables ... 59
5.5.3 Push-pull connector for IRT-PRO devices ... 60

**6 Approvals ... 61**

**7 Technical specifications ... 67**

**A Dimension drawings ... 77**

**B Test of mechanical stability ... 83**

**C Training, Service & Support ... 85**

**Index ... 87**

# Functions 1

## Functions of the X-200 IE Switches

The X-200 IE switches are ideally suited for setting up Industrial Ethernet networks in bus, star and ring structures with transmission rates of 10/100 Mbps. All X-200 switches operate in the SIMATIC environment.

### Hardware properties:

- X devices have a rugged metal housing and can be installed on a DIN rail, a standard rail or directly on a wall.
- XF devices have a plastic housing and a flat design. They are suitable for installation on a DIN rail.
- Redundant power supply, 2 x 24 VDC (exception: IRT-PRO devices)
- Diagnostics LED
- Signaling contact
- SET button for local configuration of the signaling contact
- Slot for C-PLUG
- Reliable plug-in connections thanks to rugged device connectors suitable for industry in conjunction with PROFINET-compliant FastConnect plugs.
- TS devices meet the railway standard EN 50155

### Software properties:

- PROFINET Diagnostics
- Topology support (LLDP)
- CLI - Command Line Interface / Telnet
- WBM - Web Based Management
- Configuration with STEP 7
- SNMP
- Ring redundancy including redundancy manager
- Passive Listening
- FM devices support the Fiber Monitoring Protocol and allow the monitoring of optical line sections.

## Special features of the X-200IRT IE switches

The IRT variants were designed specifically for setting up Industrial Ethernet networks with isochronous/clock synchronous real-time communication. In addition to the properties named above, the IRT switches also provide the following functions:

- IRT communication based on the combination of the switching methods cut through and store and forward.
- Fast media redundancy thanks to an integrated redundancy manager for Fast Ethernet.
- Standby redundancy

## Special features of the PRO variants

The devices with the "PRO" supplement are designed with degree of protection IP65 or IP67 for use outside a cabinet.

## Frame delay times

The number of IE Switches X-200 connected in a line influences the frame delay.

---

**Note**

**Frame delay time with X-200 without IRT**

When a frame passes through X-200 IE switches, it is delayed by the Store&Forward function of the X-200 IE switches.

- With a 64 byte frame length by approx. 10 microseconds (at 100 Mbps).
- With a 1500 byte frame length by approx. 130 microseconds (at 100 Mbps).

This means that the more IE Switch X-200 devices the frame passes through, the longer the frame delay.

---

**Note**

**Frame delay time with X-200 with IRT**

The more X-200IRT IE switches a frame runs through, the higher the frame delay. By using the "cut through" switching mechanism, the X-200IRT IE switches are ideal to meet the real-time requirements of PROFINET.

Cut through is, however, not possible:

- Between a port set to 10 Mbps and a port set to 100 Mbps.
- When two packets are to be sent at the same time on one port.

  In this case, an X-200 IE switch changes to Store&Forward and the delay increases.

---

## Overview of the functions

The following table shows the hardware and software properties for each product variant of the X-200 switches in detail:

| | | Hardware | | | | | | | | | Software | | | | | | | | | | |
|---|---|---|---|---|---|---|---|---|---|---|---|---|---|---|---|---|---|---|---|---|---|
| | Device type | Flat design | Compact housing | Diagnostics LED | SIMATIC environment | Redundant power supply | Signaling contact | SET button | Slot for C-PLUG | Railway approval | PROFINET Diagnostics | Topology support (LLDP) | Comman Line Interface (CLI) / Telnet | Web Based Management (WBM) | Configuration with STEP 7 | SNMP | Ring redundancy incl. Redundancy manager | Standby redundancy | IRT communication | Passive Listening | Fiber Monitoring Protocol |
| SCALANCE X-200 | X204-2 | | • | • | • | • | • | • | • | | • | • | • | • | • | • | • | | | • | |
| | X204-2TS | | • | • | • | • | • | • | • | • | • | • | • | • | • | • | • | | | • | |
| | X204-2FM | | • | • | • | • | • | • | • | | • | • | • | • | • | • | • | | | • | • |
| | X204-2LD | | • | • | • | • | • | • | • | | • | • | • | • | • | • | • | | | • | |
| | X204-2LD TS | | • | • | • | • | • | • | • | • | • | • | • | • | • | • | • | | | • | |
| | X206-1 | | • | • | • | • | • | • | • | | • | • | • | • | • | • | • | | | • | |
| | X206-1LD | | • | • | • | • | • | • | • | | • | • | • | • | • | • | • | | | • | |
| | X208 | | • | • | • | • | • | • | • | | • | • | • | • | • | • | • | | | • | |
| | X208PRO | | • | • | • | • | • | • | • | | • | • | • | • | • | • | • | | | • | |
| | X212-2 | | • | • | • | • | • | • | • | | • | • | • | • | • | • | • | | | • | |
| | X212-2LD | | • | • | • | • | • | • | • | | • | • | • | • | • | • | • | | | • | |
| | X216 | | • | • | • | • | • | • | • | | • | • | • | • | • | • | • | | | • | |
| | X224 | | • | • | • | • | • | • | • | | • | • | • | • | • | • | • | | | • | |
| | XF204 | • | | • | • | • | • | • | • | | • | • | • | • | • | • | • | | | • | |
| | XF204-2 | • | | • | • | • | • | • | • | | • | • | • | • | • | • | • | | | • | |
| | XF206-1 | • | | • | • | • | • | • | • | | • | • | • | • | • | • | • | | | • | |
| | XF208 | • | | • | • | • | • | • | • | | • | • | • | • | • | • | • | | | • | |
| SCALANCE X-200IRT | X200-4P IRT | | • | • | • | • | • | • | • | | • | • | • | • | • | • | • | • | • | • | |
| | X201-3P IRT | | • | • | • | • | • | • | • | | • | • | • | • | • | • | • | • | • | • | |
| | X201-3P IRT PRO | | • | • | • | | • | • | • | | • | • | • | • | • | • | • | • | • | • | |
| | X202-2IRT | | • | • | • | • | • | • | • | | • | • | • | • | • | • | • | • | • | • | |
| | X202-2P IRT | | • | • | • | • | • | • | • | | • | • | • | • | • | • | • | • | • | • | |
| | X202-2P IRT PRO | | • | • | • | | • | • | • | | • | • | • | • | • | • | • | • | • | • | |
| | X204IRT | | • | • | • | • | • | • | • | | • | • | • | • | • | • | • | • | • | • | |
| | X204IRT PRO | | • | • | • | | • | • | • | | • | • | • | • | • | • | • | • | • | • | |
| | XF204IRT | • | | • | • | • | • | • | • | | • | • | • | • | • | • | • | • | • | • | |

• applies

## Number of electrical and optical connectors in the product name

The number before the hyphen in the product name indicates the number of electrical connectors. The number following the hyphen indicates the number of optical connectors of the device. For example, the switch X212-2 has twelve electrical and two optical connectors.

# Description of the device

# 2

## 2.1 Device views

### Device view based on the example of an X204-2TS

The following figure describes the individual components of an IE switch X200.

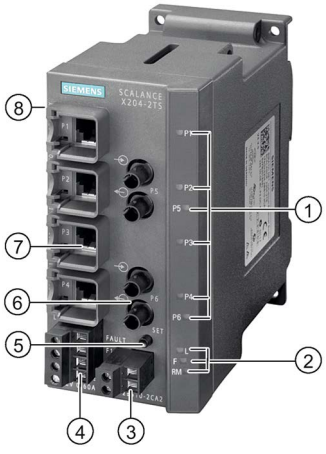


1 LEDs for attachments to Industrial Ethernet
2 LEDs
   - L: Power LED, power supply
   - F: Fault LED
   - RM: Redundancy manager or standby
3 Connector for signaling contact
4 Connector for power supply
5 SET button
6 Optical attachment to Industrial Ethernet
7 Electrical attachment to Industrial Ethernet
8 (on rear of device, not shown in figure:) Slot for C-PLUG

## Device view based on the example of an X202-2P IRT PRO

The following figure describes the individual components of a PRO version of an IE switch X-200.

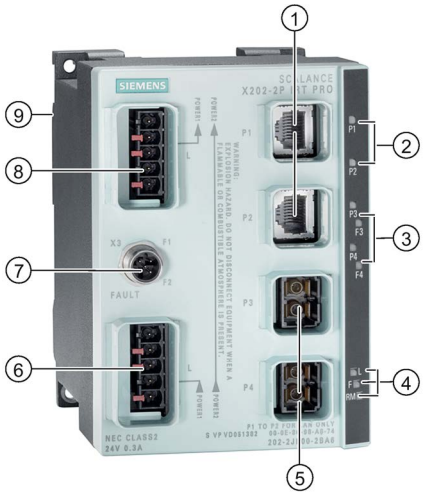


1 Electrical attachments to Industrial Ethernet
2 LEDs for electrical connectors
3 LEDs for optical connectors with diagnostics LEDs
4 LEDs
   - L: Power LED, power supply
   - F: Fault LED
   - RM:
     – green = redundancy manager
     – yellow = standby indicator
5 Optical attachments to Industrial Ethernet
6 Connector for the power supply (supplied with L1, additionally looped through to L2)
7 Connector for signaling contact
8 Power supply for further devices (looped through from L1 to L2)
9 (on rear of device, not shown in figure): Slot for the C-PLUG and SET button

## Device view based on the example of an XF204

The following figure describes the individual components of an IE switch X-200, flat design.

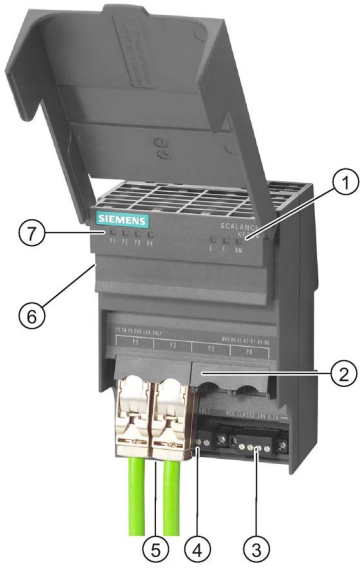


1 LEDs
   - L: Power LED, power supply
   - F: Fault LED
   - RM: Redundancy manager
2 Attachments to Industrial Ethernet
3 Connector for power supply
4 Connector for signaling contact
5 (behind the connectors, not shown in figure:) SET button
6 (on side of device, not shown in figure:) Slot for C-PLUG
7 LEDs for attachments to Industrial Ethernet

## 2.2 Accessories

### C-PLUG

| Component | Description | Article number |
|---|---|---|
| C-PLUG | Configuratiioon plug, exchangeable storage medium for configuration data | 6GK1 900-0AB00 |

### Power llimiter

| Component | Description | Article number |
|---|---|---|
| Redundancy module SITOP PSE202U NEC Class 2 | Extension module for limiting the output power according to NEC Class 2 (power limiter) | 6EP1 962-2BA00 |

### Plug Power Plug PRO

| Component | Description | Article number |
|---|---|---|
| Power Plug PRO | 5-pin push-pull-connector for installation on site<br>1 connector per package | 6GK1 907-0AB10-6AA0 |

### RJ-45 data plug-in connector

| Component | Description | Article number |
|---|---|---|
| IE FC RJ-45 PLUG PRO (push pull) | RJ-45 data plug-in connector for IE FC TP cables 2x2, IP65<br>1 connector per package | 6GK1 901-1BB20-6AA0 |
| IE RJ-45 PLUG PRO (push pull) | RJ-45 data plug-in connector for IE TP cables 2x2, IP65<br>1 connector per package | 6GK1 901-1BB10-6AA0 |
| IE FC RJ-45 PLUG 180 2x2 | RJ-45 data plug-in connector for IE FC cables 2x2, 180° cable outlet 10/100 Mbps, rugged metal housing, 1 connector per package | 6GK1 901-1BB10-2AA0 |
| IE FC RJ-45 PLUG 180 2x2 | RJ-45 data plug-in connector for IE FC cables 2x2, 180° cable outlet, 10/100 Mbps, rugged metal housing<br>10 connectors per package | 6GK1 901-1BB10-2AB0 |
| IE FC RJ-45 PLUG 180 2x2 | RJ-45 data plug-in connector for IE FC cables 2x2, 180° cable outlet, 10/100 Mbps, rugged metal housing<br>50 connectors per package | 6GK1 901-1BB10-2AE0 |
| IE FC RJ-45 PLUG 180 4x2 | RJ-45 data plug-in connector for IE FC cables 4x2 (24 AWG), 180° cable outlet, CAT6A, 10/100/1000/10000 Mbps, rugged metal housing<br>1 connector per package | 6GK1 901-1BB12-2AA0 |

| Component | Description | Article number |
|---|---|---|
| IE FC RJ-45 PLUG 180 4x2 | RJ-45 data plug-in connector for IE FC cables 4x2 (24 AWG), 180° cable outlet, CAT6A, 10/100/1000/10000 Mbps, rugged metal housing<br>10 connectors per package | 6GK1 901-1BB12-2AB0 |
| IE FC RJ-45 PLUG 180 4x2 | RJ-45 data plug-in connector for IE FC cables 4x2 (24 AWG), 180° cable outlet, CAT6A, 10/100/1000/10000 Mbps, rugged metal housing<br>50 connectors per package | 6GK1 901-1BB12-2AE0 |

## SC RJ plug-in connector

| Component | Description | Article number |
|---|---|---|
| IE SC RJ POF PLUG PRO (push pull) | SC RJ plug-in connector for POF fiber-optic cables<br>1 duplex connector per package | 6GK1 900-0MB00-6AA0 |
| IE SC RJ PCF PLUG PRO (push pull) | SC RJ plug-in connector for PCF fiber-optic cables<br>1 duplex connector per package | 6GK1 900-0NB00-6AA0 |

# 2.3 The LEDs

## 2.3.1 LED display when the device starts up

When the X-200 starts up, the LEDs light up in the following sequence:

- The green power LED lights up immediately after turning on the device.
- The LEDs of the Ethernet connectors light up for approximately 6 seconds.
- When the Ethernet LEDs go off, the red fault LED is lit for approximately 20 seconds.
- Following this, after approximately 2 seconds the correct link status is displayed.

The X-200 is now ready for operation.

## 2.3.2 Power LED "L" (green/yellow LED)

The power LED shows the status of the power supply on the X-200 IE switch. The power LED can light up either green or yellow. The meanings of the display are as follows:

| LED color | LED status | Meaning |
|---|---|---|
| Green | Lit | Both power supplies are connected; in other words, redundant power supply. |
| Yellow | Lit | Only one power supply is connected. |
| - | Off | No power supply is connected or the voltage is < 14 VDC or with TS devices < 8 VDC. |

**Note**

The following devices do not have a redundant power supply:

- X201-3P IRT PRO
- X202-2P IRT PRO
- X204IRT PRO

### 2.3.3 Fault LED "F" (yellow/red LED)

The fault LED indicates a fault/error on the X-200. If the X-200 detects an error, the signaling contact is opened at the same time assuming that the response of the signaling contact was not configured differently.

The meanings of the fault LED display are as follows:

| LED color | LED status | Meaning |
|---|---|---|
| Yellow | Lit | The LED can only adopt this status with FM devices.<br>Check the received power or the loss of power on optical connections. If necessary, replace the parts. |
| Red | Lit | The fault LED lighting up can have the following meanings:<br>• Link down event on a monitored port<br>• Loss of the power supply<br>• C-PLUG error<br>• Device is in PROFINET mode:<br>– There is no connection to the controller.<br>– There is a connection to the controller. A configured diagnostics interrupt is also pending, for example power fail interrupt, C-PLUG interrupt etc.<br>• Redundancy manager connected through<br>• Switchover of standby connection<br>• A defined value was undershot in a monitored optical connection.<br>• A loop was detected.<br>• Device startup. The LED lights up for approximately 20 seconds. |
| Red | Flashing | Internal error detected. Notify maintenance personnel. If necessary, send the device in for repair. |
| - | Off | No error detected. |

### 2.3.4 Redundancy manager LED "RM" (green LED)

The green LED shows the following statuses of the X-200:

| LED color | LED status | Meaning |
|---|---|---|
| Green | Lit | The device is operating in the role of redundancy manager. The ring is operating free of errors. The monitoring is enabled. |
| Green | Flashing | The device is operating in the role of redundancy manager. An interruption was detected in the ring. The device has switched through. |
| - | Off | The device is not operating in the role of redundancy manager. |

**Note**

This LED labeled on the device with "RM" has a dual function. The color of the display changes depending on the function:

- If the LED is lit green, the redundancy manager function is indicated.
- If the LED is lit yellow, the standby function is indicated.

In Web Based Management (WBM), the LED is labeled differently depending on the function:

- The redundancy manager function (as shipped) is labeled "RM".
- The standby function is labeled "SB" in the WBM.

### 2.3.5 Standby LED "RM" (yellow LED)

You will find the standby LED only on devices with the IRT function.

**Note**

This LED labeled on the device with "RM" has a dual function. The color of the display changes depending on the function:

- If the LED is lit green, the redundancy manager function is indicated.
- If the LED is lit yellow, the standby function is indicated.

In Web Based Management (WBM), the LED is labeled differently depending on the function:

- The redundancy manager function (as shipped) is labeled "RM".
- The standby function is labeled "SB" in the WBM.

The yellow LED indicates the following statuses of the X-200IRT:

| LED color | LED status | Meaning |
|---|---|---|
| Yellow | Lit | The standby function is activated, the switch is in active mode. |
| Yellow | Flashes slowly | The standby function is activated, the switch is in passive mode. |
| Yellow | Flashes quickly | Standby partner lost. |
| - | Off | The standby function is not activated. |

## 2.3.6 Port LEDs "P" (green/yellow LEDs)

The LEDs of the Ethernet connectors can be lit green or yellow. The meanings of the display are as follows:

| LED color | LED status | Meaning |
|---|---|---|
| Green | Lit | Link exists, no data reception |
| Yellow | Lit | Link exists, data being received<br>Device startup. The LED lights up for approximately 6 seconds. |
| Yellow | Flashing | Setting or display of the fault mask |

The following statuses of the port LEDs do not exist on devices with the IRT function:

| LED color | LED status | Meaning |
|---|---|---|
| Green | flashes once per period | Link exists and port in "blocking" status.<br>In this status, the port only receives management data (no user data). |
| Green | flashes three times per period | Link exists and port is deactivated by the management.<br>In this status, no data is sent or received via the port. |
| Green | flashes four times per period | Port exists and is in the "monitor port" status.<br>In this status, the data traffic of another port is mirrored to this port. |

## 2.3.7 Diagnostics LEDs for optical connectors "F" (yellow LED)

You will find the diagnostics LEDs only on the devices with the IRT function.

The status of the optical connectors is indicated by an additional yellow LED per connector. The LEDs signal the following statuses:

| LED color | LED status | Meaning |
|---|---|---|
| Yellow | Lit | Check the plug-in connection and the quality of the fiber-optic cable. If necessary, replace the parts. |
| - | Off | Relevant only if the link exists. The existing link power margin is adequate for error-free operation. |

## 2.3.8 Show Location

### Localizing an IE Switches X-200

To identify an IE Switch X-200 locally and with certainty, you can use the "show location" function on a programming device to select the node over the network and make it flash. This can be used, for example, when assigning addresses to make sure that the correct node receives the address. All port LEDs of the addressed node flash green at 2 Hz.

With the Primary Setup Tool (PST) V3.0 or higher, you can trigger this function with "Module \ Flash".

## 2.4 The SET button

### Function of the SET button

With the SET button, you can change various settings of the device. The changed settings remain after cycling power to the device.

Different settings are made depending on how long you hold down the SET button, as described in the following table:

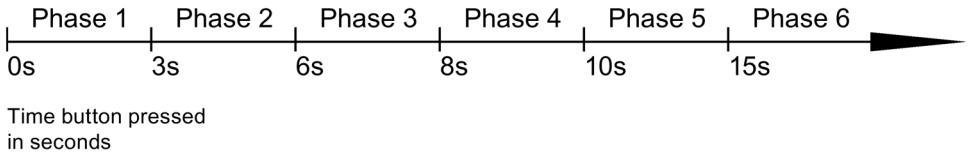


Figure 2-1 Phases for changing settings using the SET button

| Phase | Description |
|---|---|
| 1 | The currently set fault mask is displayed. If no fault mask has been set, all ports flash one after the other.<br>If you release the button in phase 1, this has no effect. |
| 2 | The LEDs of the ports at which there is currently a link flash at 2.5 Hz.<br>If you release the button in phase 2, this has no effect. |
| 3 | The LEDs of the ports at which there is currently a link and the LEDs of the connected power supply are lit permanently.<br>If you release the button in phase 3, the fault mask corresponding to the lit LEDs is adopted. |
| 4 | The RM LED flashes.<br>If you release the button in phase 4, the redundancy manager is deactivated. The redundancy function remains enabled. The device changes to "Automatic Redundancy Detect" mode. |
| 5 | The RM LED is lit permanently.<br>If you release the button in phase 5, the redundancy function is activated and the device is configured as HRP manager. |
| 6 | All LEDs flash.<br>The device is reset to the factory defaults. |

## 2.5 The C-PLUG

### Area of application

The C-PLUG is an exchangeable medium for storage of the configuration and project engineering data of the basic device. This means that the configuration data remains available if the basic device is replaced.

### How it works

Power is supplied by the basic device. The C-PLUG retains all data permanently when the power is turned off.

If an empty C-PLUG (factory settings) is inserted, all configuration data of an IE Switch X-200 is saved to it when the device starts up. Changes to the configuration during operation are also saved on the C-PLUG without any operator intervention being necessary.

If a C-PLUG is inserted, the configuration stored internally on the basic device is no longer changed. Al changes made to the configuration during ongoing operation are only stored on the C-PLUG.

A basic device with an inserted C-PLUG automatically uses the configuration data of the C-PLUG when it starts up. This is, however, only possible when the data was written by a compatible device type.

This allows fast and simple replacement of the basic device. If a device is replaced, the C-PLUG is taken from the failed component and inserted in the replacement device. The first time it is started up, the replacement device has the same configuration as the failed device except for the MAC address set by the vendor.

### Compatible devices

As a general rule, the data on the C-PLUG is only compatible with devices having an identical order number and the same device name.

The device combinations shown in the following table are exceptions. With these devices, the exchange of the C-PLUG is possible in one direction.

| Device type | C-PLUG created by device with order number | | Compatible with device with order number |
|---|---|---|---|
| X204-2 | 6GK5 204-2BB00-2AA3 | ➡ | 6GK5 204-2BB10-2AA3 |
| X204-2LD | 6GK5 204-2BC00-2AA3 | | 6GK5 204-2BC10-2AA3 |
| X206-1 | 6GK5 206-1BB00-2AA3 | | 6GK5 206-1BB10-2AA3 |
| X206-1LD | 6GK5 206-1BC00-2AA3 | | 6GK5 206-1BC10-2AA3 |
| X208 | 6GK5 208-0BA00-2AA3 | | 6GK5 208-0BA10-2AA3 |
| X208PRO | 6GK5 208-0HA00-2AA6 | | 6GK5 208-0HA10-2AA6 |

**Note**

Combinations other than those shown in the table are not compatible with each other.

**Note**

If you insert a C-PLUG in a compatible device, the system name of the original device is entered both in the system name as well as in the PROFINET IO device name of the compatible device.

## Using a previously written C-PLUG

If you want to insert a C-PLUG that has already been used and written to into a new differently configured X-200 IE switch, you will first need to delete the existing data on the C-PLUG. You will find information about this in the configuration manual of the SCALANCE X-200 in the section on the WBM menu items.

**Note**

The X-200 IE switches normally start up with the configuration of the C-PLUG, assuming this was written to by a compatible device type. If the C-PLUG was written to by an incompatible device type, the basic device will not start up fully and signals an error. The WBM menu "System C-PLUG" is displayed automatically. Here, use the "Modify C-PLUG" function to specify whether or not the device operates with a C-PLUG.

If you operate a device with a C-PLUG, the C-PLUG can either be initialized with the factory settings or with the settings stored internally on the device.

## Diagnostics

The following events are signaled by the diagnostics mechanisms of the X-200, such as LEDs, WBM etc.:

- Inserting a C-PLUG that contains the configuration of an incompatible device type.
- The accidental removal of a C-PLUG
- General malfunctions of the C-PLUG.

## The C-PLUG does not ship with the product

The C-PLUG is not supplied with the IE switches X-200, see section “Accessories (Page 17)“.

## Inserting in the slot

| NOTICE |
| --- |
| • Insert and remove the C-PLUG only when power is off.<br>• In a device with a varnished printed circuit board, you may only use a C-PLUG with a varnished board. |

Figure 2-2 C-PLUG and slot

The slot for the C-PLUG is located as follows:

- On the IE Switch X-200 on the back of the device.
- On the IE Switch XF-200 on the left hand side of the device.

Follow the steps below to insert the C-PLUG:

1. Remove the screw cover.
2. Insert the C-PLUG in the slot.
3. Close the slot with the screw cover.

## Removing the C-PLUG

It is only necessary to remove the C-PLUG if the IE Switch X-200 develops a fault.

You can lever the C-PLUG out of the slot carefully using flat pliers, tweezers, or a small screwdriver.

If no C-PLUG is inserted in the device, when the device restarts, an error message is output in Web Based Management and in the Command Line Interface. In this case, you will need to set the device to operation without C-PLUG. For further information, refer to the section "System C-PLUG" in the section on the WBM menu in the configuration manual.

# Safety notices 3

## 3.1 Safety notices in general

Note the following safety notices. These relate to the entire working life of the device.

**⚠ WARNING**

**Do not use any parts that show evidence of damage**

If you use damaged parts, there is no guarantee that the device will function according to the specification.

If you use damaged parts, this can lead to the following problems:

- Injury to persons
- Loss of the approvals
- Violation of the EMC regulations
- Damage to the device and other components

Use only undamaged parts.

### Installation guidelines

The product meets the requirements if you adhere to the installation and safety notices contained in this documentation and in the following documentation when installing and operating the product.

#### Current documentation on the Internet

The current descriptions of the currently available products can be found on the Product Support pages under the entry IDs below:

- Configuration manual SIMATIC NET PH SCALANCE X-200
  63203259 (http://support.automation.siemens.com/WW/view/en/63203259)
- System manual SIMATIC NET Industrial Ethernet Network Manual
  27069465 (http://support.automation.siemens.com/WW/view/en/27069465)
- Configuration manual EMC Installation Guidelines
  60612658 (http://support.automation.siemens.com/WW/view/en/60612658)

## Electrostatic discharge

To protect the product process from electrostatic discharge, personnel must first discharge any electrostatic charge from their body before touching the product.

## Special safety notices

You should also read the safety notices relating to handling in the individual sections, particularly in the sections "Installation" and "Connecting up".

## 3.2 Safety notices for hazardous areas

### Safety notices on use in hazardous areas

#### General safety notices relating to protection against explosion

| ⚠ WARNING |
| --- |
| EXPLOSION HAZARD<br>DO NOT OPEN WHEN ENERGIZED. |

#### Safety notices when using the device according to Hazardous Locations (HazLoc)

If you use the device under HazLoc conditions you must also keep to the following safety notices in addition to the general safety notices for protection against explosion:

This equipment is suitable for use in Class I, Division 2, Groups A, B, C and D or non-hazardous locations only.

This equipment is suitable for use in Class I, Zone 2, Group IIC or non-hazardous locations only.

## 3.3 Security recommendations

To prevent unauthorized access, note the following security recommendations.

### General

- You should make regular checks to make sure that the device meets these recommendations and/or other security guidelines.
- Evaluate your plant as a whole in terms of security. Use a cell protection concept with suitable products.

### Physical access

- Limit physical access to the device to qualified personnel.
  The memory card or the C-PLUG contains sensitive data such as certificates, keys etc. that can be read out and modified.
- Lock unused physical ports on the device. Unused ports can be used to gain forbidden access to the plant.

### Software (security functions)

- Keep the software up to date. Check regularly for security updates of the product.
  You will find information on this at: www.siemens.com/industrialsecurity (http://www.siemens.com/industrialsecurity)
- Only activate protocols that you really require to use the device.
- Restrict access to the device with a firewall or rules in an access control list (ACL - Access Control List).
- The option of VLAN structuring provides good protection against DoS attacks and unauthorized access. Check whether this is practical or useful in your environment.
- Enable logging functions. Use the central logging function to log changes and access attempts centrally. Check the logging information regularly.
- Configure a Syslog server to forward all logs to a central location.

### Passwords

- Define rules for the use of devices and assignment of passwords.
- Regularly update passwords and keys to increase security.
- Change all default passwords for users before you operate the device.
- Only use passwords with a high password strength. Avoid weak passwords for example password1, 123456789, abcdefgh.
- Make sure that all passwords are protected and inaccessible to unauthorized personnel.
- Do not use the same password for different users and systems or after it has expired.

## Keys and certificates

This section deals with the security keys and certificates you require to set up SSL.

- We strongly recommend that you create your own SSL certificates and make them available.

  There are preset certificates and keys on the device. The preset and automatically created SSL certificates are self-signed. We recommend that you use SSL certificates signed either by a reliable external or by an internal certification authority.
  The device has an interface via which you can import the certificates and keys.

- We recommend that you use certificates with a key length of 2048 bits.

## Secure/non-secure protocols

- Check whether use of SNMPv1 is necessary. SNMPv1 is classified as non-secure. Use the option of preventing write access. The product provides you with suitable setting options.
- For the DCP function, enable the "DCP read-only" mode after commissioning.
- If SNMP is enabled, change the community names. If no unrestricted access is necessary, restrict access with SNMP.
- Use secure protocols when access to the device is not prevented by physical protection measures.

  The following protocols provide secure alternatives:

  – SNMPv1 → SNMPv3
  – HTTP → HTTPS
  – Telnet → SSH
  – SNTP → NTP (secure)

- Avoid or disable non-secure protocols, for example Telnet and TFTP. For historical reasons, these protocols are still available, however not intended for secure applications. Use non-secure protocols with caution.
- To prevent unauthorized access to the device or network, take suitable protective measures against non-secure protocols.

## Available protocols per port

The following list provides you with an overview of the open ports on this device. Keep this in mind when configuring a firewall.

The table includes the following columns:

- **Protocol**

  All protocols that the device supports

- **Port number**

  Port number assigned to the protocol

- **Port status**
  - Open

    The port is always open and cannot be closed.

  - Open (when configured)

    The port is open if it has been configured.

    **Note**

    With some protocols the port may be open although the corresponding protocol is disabled, for example TFTP.

- **Default status of the port**
  - Open

    As default the port is open.

  - Closed

    As default the port is closed.

- **Authentication**

  Specifies whether or not the protocol is authenticated during access.

| Protocol | Port number | Port status | Default status of the port | Authentication |
|---|---|---|---|---|
| SSH | TCP/22 | Open | Open | Yes |
| HTTP | TCP/80 | Open | Open | Yes |
| HTTPS | TCP/443 | Open | Open | Yes |
| SNTP<br>NTP (secure) | UDP/123 | Open<br>(when configured) | Closed | No |
| SNMP | UDP/161 | Open<br>(when configured) | Open | Yes |
| PROFINET IO | UDP/34964<br>UDP/1026, 1027 | Open | Open | No |
| PROFINET IO Service | TCP/84 | Open | Open | No |

# Installation 4

## 4.1 Safety notices for installation

### Safety notices

When installing the device, keep to the notices listed below.

**WARNING**

**When used in ships, a DIN rail does provide adequate support**

For the following devices, installation on a 35 mm DIN rail for use in ships is not permitted:

- X201-3P IRT PRO
- X202-2P IRT PRO
- X204IRT PRO
- X208PRO
- X212-2
- X212-2LD
- X216
- X224

In ships, the DIN rail does not provide adequate support.

**WARNING**

If a device is operated in an ambient temperature of more than 50 °C, the temperature of the device housing may be higher than 70 °C. The device must therefore be installed so that it is only accessible to service personnel or users that are aware of the reason for restricted access and the required safety measures at an ambient temperature higher than 50 °C.

**WARNING**

If the cable or conduit entry point exceeds 70 °C or the branching point of conductors exceeds 80 °C, special precautions must be taken. If the equipment is operated in an air ambient in excess of 50 °C, only use cables with admitted maximum operating temperature of at least 80 °C.

## Safety notices on use in hazardous areas

### General safety notices relating to protection against explosion

**WARNING**

The device may only be operated in an environment with pollution degree 1 or 2 (see IEC 60664-1).

**WARNING**

When used in hazardous environments corresponding to Class I, Division 2 or Class I, Zone 2, the device must be installed in a cabinet or a suitable enclosure.

**WARNING**

EXPLOSION HAZARD

SUBSTITUTION OF COMPONENTS MAY IMPAIR SUITABILITY FOR CLASS I, DIVISION 2 OR ZONE 2.

### Safety notices for use according to ATEX and IECEx

If you use the device under ATEX or IECEx conditions you must also keep to the following safety notices in addition to the general safety notices for protection against explosion:

**WARNING**

To comply with EU Directive 94/9 (ATEX95), this enclosure or the cabinet must meet the requirements of at least IP54 in compliance with EN 60529.

### Devices with op is approval for optical ports

Some devices have an additional ATEX approval according to II 3 (2) G Ex nA [op is] IIC T4 or an additional IECEx approval according to Ex nA [op is Gb] IIC T4 Gc, refer to the section "Approvals (Page 61). This is indicated on the type plate. With these devices the FO bus connections may run through or in a Zone 1 hazardous area.

## Further notes

| NOTICE |
| --- |
| **Warming and premature aging of the IE switch due to direct sunlight**<br>Direct sunlight can heat up the device and can lead to premature aging of the IE switch and its cabling.<br>Provide suitable shade to protect the IE switch against direct sunlight. |

**Note**

**Note the mounting position for XF and TS devices**

With the following IE switches, an ambient temperature of maximum +40 °C is permitted if the device is installed on a vertical rail:

- X204-2TS
- X204-2LD TS
- XF204
- XF204-2
- XF206-1
- XF208
- XF204IRT

## 4.2 Installation options

### Types of installation

IE Switches X-200 can be installed in the following ways:

- Installation on a 35 mm DIN rail complying with DIN EN 60715
- Installation on a SIMATIC S7-300 standard rail
- Wall mounting

Unless stated otherwise, the mounting options listed below apply to all X-200 IE switches.

#### Exception XF-200

The XF devices (flat design) can only be installed on a 35 mm DIN rail.

# 4.3 Installation on a DIN rail

## Installation

Figure 4-1 Installation on a 35 mm DIN rail

To install an X-200 on a 35 mm DIN rail complying with DIN EN 60715, follow the steps below:

1. Place the upper catch of the device over the top of the DIN rail and then push in the lower part of the device against the rail until it clips into place.
2. Fit the connectors for the power supply.
3. Fit the connectors for the signaling contact
4. Insert the terminal blocks or M12 cable connectors into the sockets on the device.

## Removal

Figure 4-2 Removing from a 35 mm DIN rail

To remove an X-200 from a DIN rail, follow the steps below:

1. First disconnect all connected cables.
2. Use a screwdriver to release the lower DIN rail catch of the device and pull the lower part of the device away from the rail.

# 4.4 Installation on a standard rail

## Installation on a SIMATIC S7-300 standard rail

To install an X-200 on a standard rail, follow the steps below:

1. Fit the housing guide on the top of the housing into the standard rail.
2. Screw the X-200 to the underside of the standard rail.
3. Fit the connectors for the power supply.
4. Fit the connectors for the signaling contact.
5. Insert the terminal blocks or M12 cable connectors into the sockets on the X-200.

Figure 4-3 Installation on a SIMATIC S7-300 standard rail

## Removal

To remove an X-200 from a standard rail, follow the steps below:

1. First disconnect all connected cables.
2. Release the screws on the bottom of the standard rail.
3. Then lift the X-200 away from the standard rail.

# 4.5 Wall mounting

## Wall mounting

**Note**

The wall mounting must be capable of supporting at least four times the weight of the X-200, see section Technical specifications (Page 67).

When mounting on a wall, use mounting fittings suitable for the type of wall. To secure the device in concrete, you could, for example use the following material:

- 4 wall plugs, 6 mm in diameter and 30 mm long
- 4 screws 3.5 mm in diameter and 40 mm long

Follow the steps below to install the X-200 on a wall:

1. Prepare the drill holes for wall mounting.
   You will find the precise dimensions in the Appendix Dimension drawings (Page 77).
2. Connect the electrical cable connecting cables.
3. Fit the connectors for the signaling contact.
4. Insert the terminal blocks or M12 cable connectors into the sockets on the IE Switch X-200.
5. Screw the device to the wall.

# Connecting up

# 5

## 5.1 Safety when connecting up

### Safety notices

When connecting up the device, keep to the safety notices listed below.

**WARNING**

The equipment is designed for operation with Safety Extra-Low Voltage (SELV) by a Limited Power Source (LPS).

This means that only SELV / LPS complying with IEC 60950-1 / EN 60950-1 / VDE 0805-1 must be connected to the power supply terminals. The power supply unit for the equipment power supply must comply with NEC Class 2, as described by the National Electrical Code (r) (ANSI / NFPA 70).

If the equipment is connected to a redundant power supply (two separate power supplies), both must meet these requirements.

---

**Note**

**Limitation of the output voltage according to NEC Class 2 by redundancy module**

To meet the requirements according to NEC Class 2, you can use a power supply with SELV along with a power limiter, see e.g. the section "Accessories (Page 17)".

---

**Note**

**Functional extra low voltage**

The supply of the devices by PELV (Protective Extra Low Voltage) according to DIN VDE 0100-410 or IEC 60364-4-41 is permitted when the generated nominal voltage does not exceed the voltage limits 25 VAC or 60 VDC.

---

## Safety notices on use in hazardous areas

### General safety notices relating to protection against explosion

| ⚠ WARNING |
| --- |
| EXPLOSION HAZARD<br>DO NOT CONNECT OR DISCONNECT EQUIPMENT WHEN A FLAMMABLE OR COMBUSTIBLE ATMOSPHERE IS PRESENT. |

### Exceptions

For the devices listed below, there are no requirements according to NEC Class 2 or LPS. For these devices, note the conditions described in the section Supply for IRT-PRO devices (Page 47).

- X201-3P IRT PRO
- X202-2P IRT PRO
- X204IRT PRO

### Safety notices when using the device according to Hazardous Locations (HazLoc)

If you use the device under HazLoc conditions you must also keep to the following safety notices in addition to the general safety notices for protection against explosion:

| ⚠ WARNING |
| --- |
| EXPLOSION HAZARD<br>DO NOT DISCONNECT WHILE CIRCUIT IS LIVE UNLESS AREA IS KNOWN TO BE NON-HAZARDOUS. |

### Safety notices for use according to ATEX and IECEx

If you use the device under ATEX or IECEx conditions you must also keep to the following safety notices in addition to the general safety notices for protection against explosion:

| ⚠ WARNING |
| --- |
| Take measures to prevent transient voltage surges of more than 40% of the rated voltage. This is the case if you only operate devices with SELV (safety extra-low voltage). |

## Further notes

**WARNING**

If the cable or conduit entry point exceeds 70 °C or the branching point of conductors exceeds 80 °C, special precautions must be taken. If the equipment is operated in an air ambient in excess of 50 °C, only use cables with admitted maximum operating temperature of at least 80 °C.

**CAUTION**

**Electric shock - turn off the power supply**

Turn off the power supply before you connect or disconnect cables from the device.

**NOTICE**

**Overvoltage protection**

If IE Switches X-200 are supplied over long 24 V power supply lines or networks, measures are necessary to prevent interference by strong electromagnetic pulses on the supply lines. These can result, for example, due to lightning or switching of large inductive loads.

One of the tests used to attest the immunity of devices of the IE Switches X-200 to electromagnetic interference was the "surge immunity test" according to EN61000-4-5. This test requires overvoltage protection for the power supply lines. A suitable device is, for example, the Dehn Blitzductor BVT AVD 24 V type no. 918 422 or a comparable protective element.

Manufacturer: DEHN+SÖHNE GmbH+Co.KG, Hans-Dehn-Str.1, Postfach 1640, D-92306 Neumarkt, Germany.

# 5.2 Power supply

## 5.2.1 Power supply via terminal block

### Power supply

The power supply is connected via a 4-pin plug-in terminal block that ships with the device.

- The power supply can be connected redundantly.
  - Both inputs are isolated.
  - No load distribution.
  - The power supply unit with the higher output voltage supplies the device alone.
- Power: 24 VDC
- Cable cross section for X-200: 2.5 $mm^2$
- Cable cross section for XF-200: 1.5 $mm^2$
- The power supply is connected over a high resistance with the enclosure to allow an ungrounded set up.
- The power supply is non-floating.
- The signal cables of the electrical Ethernet interfaces are floating.

The following table shows the pin assignment:

| Pin no.: | Assignment | |
|---|---|---|
| 1 | L1: 24 VDC<br>**With TS devices:**<br>L1: 12 to 24 VDC | 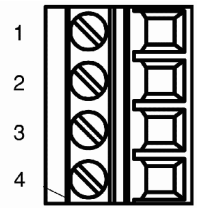 |
| 2 | M1 | |
| 3 | M2 | |
| 4 | L2: 24 VDC<br>**With TS devices:**<br>L2: 12 to 24 VDC | |

**Note**

**Special features with X208PRO and the IRT-PRO devices**

Note the special requirements for the power supply for the devices in the following sections.

## 5.2.2 Supply for X208PRO

### Power supply for X208PRO

With the IE switch SCALANCE X208PRO, the power supply is connected via two 4-pin a-coded M12 sockets.

- The power supply can be connected redundantly.
  - Both inputs are isolated.
  - No load distribution.
  - The power supply unit with the higher output voltage supplies the device alone.
- Power: 24 VDC
- The power supply is connected over a high resistance with the enclosure to allow an ungrounded set up.
- The power supply is non-floating.
- The signal cables of the electrical Ethernet interfaces are floating.

The following table shows the pin assignment:

| Pin no.: | Assignment | |
|---|---|---|
| 1 | L1 or L2: 24 VDC | 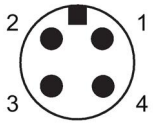 |
| 2 | n. c. | |
| 3 | M1 or M2 | |
| 4 | n. c. | |

## 5.2.3 Supply for IRT-PRO devices

### Power supply for the devices of the IRT PRO version

The following descriptions of the power supply apply to the following devices:

- X201-3P IRT PRO
- X202-2P IRT PRO
- X204IRT PRO

The power supply is connected via the push-pull Power Plug PRO. This plug has a high degree of protection (IP65) and is suitable for use outside cabinets and complies with PROFINET connector technology.

The Power Plug PRO does not ship with the device, see the section “Accessories (Page 17)“:

## Power supply

- Power: 24 VDC
- The power supply is connected over a high resistance with the enclosure to allow an ungrounded set up.
- The power supply is non-floating.
- The signal cables of the electrical Ethernet interfaces are floating.

---

**Note**

**No redundant power supply**

Since the IRT PRO version of the devices does not have a redundant power supply, connect the power supply to L1 and N1.

---

**Note**

**Plug in metal casing**

- If the devices are operated at an ambient temperature in excess of 40 °C or if currents higher than 6 A flow via the connector, the connector with the metal casing must be used.
- In areas subject to the National Electric Code (NEC), the Canadian Electric Code (CEC) and the EC directive 94/9 (ATEX) and IECEx, metal connectors must be used.

---

**Note**

**Maximum current 16 A**

The current through the Power Plug PRO must not exceed 16 A. You should therefore include a fuse that trips at a current higher than 16 A.

In areas subject to the NEC or CEC, the fuse must meet the following requirements:

- Suitable for DC (min. 60 V / max. 16 A)
- Breaking current at least 10 kA
- UL / CSA listed (UL 248-1 / CSA 22.2 No. 248.1)
- Classes R, J, L, T or CC.

Otherwise the following requirements must be met:

- Suitable for DC (min. 60 V / max. 16 A)
- Breaking current at least 10 kA
- Approved according to IEC/EN 60127-1
- Breaking characteristics
  - With circuit breakers: B or C
  - With fuses: slow blow

---

## Power supply looped through

The devices also have a connector for the switched mode and unswitched power supply of other devices with 24 VDC. Via these interfaces (L1+, N1 and L2+, N2) it is possible to loop the power through with connector technology compliant with PROFINET.

---

**Note**

**Notes on operating under marginal conditions**

When looping through the power supply, take into account the limit values; in other words, the maximum permitted current depending on the ambient temperature; refer to the table "Operation under marginal conditions" below.

When looping through the power supply under the marginal conditions described below, the device may only be operated if it is installed horizontally. Horizontal installation position means that the device is mounted, for example on a horizontal DIN or standard rail or that the labeling on the device can be read in the normal reading direction.

If no power is looped through, any installation position is permitted.

---

Table 5- 1 Operation under marginal conditions

| Environment | Max Power 1 (L1+, N1) | Max Power 2 (L2+, N2) |
|---|---|---|
| +40°C | 16 A | 16 A |
| +50°C | 12 A | 12 A |
| +60°C | 8 A | 8 A |
| SCALANCE X204IRT PRO only: | | |
| +70°C | 6 A | 6 A |

## Pin assignment of the connectors

The following table shows the pin assignment of the two power supply connectors:

| Pin no.: | Assignment | |
|---|---|---|
| 1 | L1: 24 VDC | 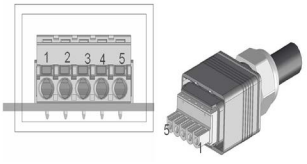  |
| 2 | N1 | |
| 3 | L2: 24 VDC | |
| 4 | N2 | |
| 5 | FE (Functional Earth) | |

## 5.3 Grounding

### Grounding when installing on a DIN rail

The device is grounded over the DIN rail.

### Grounding when installing on an S7 standard rail

The device is grounded over its rear panel and the neck of the screw.

### Grounding with wall mounting

The device is grounded by the securing screw in the unpainted hole.

Please note that X-200 IE switches must be grounded over one securing screw with minimum resistance.

If an IE Switch X-200 is mounted on a non-conducting base, a grounding cable must be installed. The grounding cable is not supplied with the device. Connect the paint-free surface of the device to the nearest grounding point using the grounding cable.

# 5.4 Signaling contact

## Signaling contact

The signaling contact or relay contact is a floating switch with which error/fault states can be signaled by breaking the contact.

The following errors/faults can be signaled by the signaling contact:

- The loss and the establishment of a link on a monitored port.
- The failure of one of the two redundant power supplies.
  Note: Devices of the IRT PRO version do not have a redundant power supply
- The loss of the connection to the controller in PROFINET IO mode.
- The redundancy manager signals an error
- An incompatible C-PLUG was inserted.

The connection or disconnection of a communication node on an unmonitored port does not lead to an error message.

The signaling contact remains activated until the error/fault is eliminated or until the current status is applied as the new desired status using the SET button.

When the IE Switch X-200 is turned off, the signaling contact is always activated, i.e. opened.

| NOTICE |
|---|
| **Load on the signaling contact**<br>The signaling contact can be subjected to a **maximum** load of **100 mA** (safety extra-low voltage (SELV), 24 VDC). |

## Connection via 2-pin terminal block

The signaling contact is connected to a 2-pin plug-in terminal block.

The following table shows the pin assignment:

| Pin no.: | Assignment | |
|---|---|---|
| 1 | F1 | 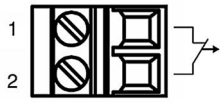 |
| 2 | F2 | |

## Connection via M12 socket

With the X-200 IRT PRO devices and with the X208PRO, the connection is via a 5-pin, b-coded M12 socket.

The following table shows the pin assignment:

| Pin no.: | Assignment | |
|---|---|---|
| 1 | F1 | |
| 2 | n.c. | |
| 3 | n.c. | |
| 4 | F2 | |
| 5 | n.c. | |

## 5.5 Attachment to Industrial Ethernet

**Note**

**Redundancy mechanisms**

If you use redundancy mechanisms such as media redundancy "HRP" or "MRP" and/or redundant linking of rings via a standby link, remember the following:

Open the redundant path before you insert a new device or replacement device in an operating network. A bad configuration or attachment of the Ethernet cables to incorrectly configured ports causes overload in the network and a breakdown in communication.

A device may only be inserted in a network and connected in the following situations:

- HRP / MRP
  - The ring ports of the device being inserted in the ring were configured as ring ports.
  - The required redundancy mode is also enabled.
  - If the device is intended to operate as the redundancy manager, "Enable Ring Redundancy" must also be set.
- Standby link
  - Select "Enable Standby Master".
  - The "Standby Connection Name" must match the name of the partner device.
  - You must also configure the standby port.

You will find detailed information in the SCALANCE X-200 configuration manual.

## 5.5.1 Electrical connections

### 5.5.1.1 Electrical attachments to Industrial Ethernet

#### Connection via RJ-45 jacks

The electrical connectors for Industrial Ethernet on the X-200 IE switch are designed as RJ-45 jacks with the following properties:

- MDI-X assignment
- Autonegotiation
- Auto polarity exchange

#### MDI / MDI-X autocrossover function

The advantage of this function is that straight-through cables can be used throughout and external Ethernet crossover cables are unnecessary. This prevents malfunctions resulting from mismatching send and receive wires. This makes installation much easier for the user.

---

Note

Formation of loops

Please note that the direct connection of two ports on the switch or accidental connection over several switches causes an illegal loop. Such a loop can lead to network overload and network failures.

---

#### Autonegotiation

Autonegotiation means the automatic detection of the functionality of the port at the opposite end. Using autonegotiation, repeaters or end devices can detect the functionality available at the port of a partner device allowing automatic configuration of different types of device. With autonegotiation, two components connected to a link segment can exchange parameters and set themselves to match the supported communication functionality.

---

Note

- If a port operating in autonegotiation mode is connected to a partner device that is not operating in autonegotiation mode, the partner device must be set permanently to half duplex mode.
- If a port is set permanently to full duplex, the connected partner device must also be set to full duplex.
- If the autonegotiation function is disabled, the MDI/MDI-X autocrossover function is also inactive. This means it may be necessary to use a crossover cable.

---

## Auto polarity exchange

If the pair of receiving cables is incorrectly connected, in other words, RD+ and RD- are swapped over, the polarity is reversed automatically.

## PIN assignment

The following table shows the pin assignment of the RJ-45 connectors:

| Pin no.: | Assignment | |
|---|---|---|
| 8 | n. c. | 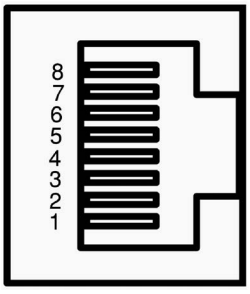  |
| 7 | n. c. | |
| 6 | TD- | |
| 5 | n. c. | |
| 4 | n. c. | |
| 3 | TD | |
| 2 | RD- | |
| 1 | RD+ | |

## Permitted cable lengths

- With connection using TP cords or TP-XP cords: maximum 10 m
- When connected using IE FC cable with IE RJ-45 plug:
  Depending on the cable type, a total length of up to 100 m is permitted between two devices.

### 5.5.1.2 Electrical connectors of the X208PRO

#### Connection via M12 sockets

With the IE switch SCALANCE X208PRO, the connection to Industrial Ethernet is via 4-pin, d-coded M12 sockets with MDI-X assignment.

#### MDI / MDI-X autocrossover function

The advantage of this function is that straight-through cables can be used throughout and external Ethernet crossover cables are unnecessary. This prevents malfunctions resulting from mismatching send and receive wires. This makes installation much easier for the user.

---

**Note**

**Formation of loops**

Please note that the direct connection of two ports on the switch or accidental connection over several switches causes an illegal loop. Such a loop can lead to network overload and network failures.

---

#### PIN assignment

The following table shows the pin assignment of the M12 sockets:

| Pin no.: | Assignment | |
|---|---|---|
| 1 | RX+ | 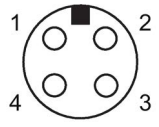  |
| 2 | TX+ | |
| 3 | RX- | |
| 4 | TX- | |

#### Permitted cable lengths

- With connection using TP cords or TP-XP cords: maximum 10 m
- When connected using IE FC cable with IE RJ-45 plug:
  Depending on the cable type, a total length of up to 100 m is permitted between two devices.

#### IE FC M12 plug PRO

The IE FC M12 Plug PRO has a high degree of protection (IP65/67) and is suitable for connecting the X208PRO to Industrial Ethernet. You can obtain this plug using the following order number: 6GK1 901-0DB20-6AA0.

## 5.5.2 Optical attachments to Industrial Ethernet

### 5.5.2.1 Multimode fiber-optic cable

#### Transmission medium

The following X-200 IE switches use multimode fiber-optic cables as the transmission medium:

- X204-2
- X204-2TS
- X204-2FM
- X206-1
- X212-2
- XF204-2
- XF206-1
- X202-2IRT

#### Characteristics:

| | |
|---|---|
| Transmission speed | 100 Mbps |
| Transmission mode | 100Base-FX according to IEEE 802.3 |
| Connectors | BFOC sockets |
| Wavelength | 1310 nm |
| Core diameter | 50 or 62.5 µm |
| Outer diameter | 125 µm |
| Light source | LED |
| Maximum range (segment length) | 5 km |

**Note**

**No autonegotiation**

With optical transmission, the full duplex mode and transmission speed cannot be changed. For this reason, the autonegotiation function cannot be selected.

### 5.5.2.2 Single mode fiber-optic cable

#### Transmission medium

The following X-200 IE switches use single mode fiber-optic cables as the transmission medium:

- X204-2LD
- X204-2LD TS
- X206-1LD
- X212-2LD

#### Characteristics:

| | |
|---|---|
| Transmission speed | 100 Mbps |
| Transmission mode | 100Base-FX according to IEEE 802.3 |
| Connectors | BFOC sockets |
| Wavelength | 1310 nm |
| Core diameter | 9 µm |
| Outer diameter | 125 µm |
| Light source | LED |
| Maximum range (segment length) | 26 km |

**Note**

**No autonegotiation**

With optical transmission, the full duplex mode and transmission speed cannot be changed. For this reason, the autonegotiation function cannot be selected.

### 5.5.2.3 POF and PCF cables

#### Transmission medium

The following X-200 IE switches use Plastic Optical Fiber (POF) or Polymer Cladded Fiber (PCF) as the transmission medium:

- X200-4P IRT
- X201-3P IRT
- X201-3P IRT PRO
- X202-2P IRT
- X202-2P IRT PRO

#### Characteristics:

| | |
|---|---|
| Transmission speed | 100 Mbps |
| Transmission mode | 100Base-FX analogous to IEEE 802.3 |
| Connectors | SC RJ jacks |
| Wavelength | 650 nm |
| Core diameter<br>• with POF<br>• with PCF | <br>• 980 µm<br>• 200 µm |
| Outer diameter<br>• with POF<br>• with PCF | <br>• 1000 µm<br>• 230 µm |
| Light source | LED |
| Cable lengths<br>• minimum<br>• maximum segment length | <br>• 0 m<br>• 50 m for POF<br>100 m for PCF |
| Signal attenuation<br>• with POF<br>• with PCF | <br>• 0.230 dB/m<br>• 0.01 dB/m |

**Note**

**No autonegotiation**

With optical transmission, the full duplex mode and transmission speed cannot be changed. For this reason, the autonegotiation function cannot be selected.

#### GI-PCF

For segment lengths longer than 100 m, you can use GI-PCF cables. Note the information of the manufacturer.

## 5.5.3 Push-pull connector for IRT-PRO devices

### Push-pull connector technology

With the following devices, the connection to Industrial Ethernet makes use of the PROFINET-compliant push-pull connector technology:

- X204IRT PRO
- X202-2P IRT PRO
- X201-3P IRT PRO

Due to their high degree of protection (IP65), the push-pull connectors are suitable for installation outside cabinets. The plugs do not ship with the product, see the section “Accessories (Page 17)“.

# Approvals

6

## Approvals issued

**Note**

**Issued approvals on the type plate of the device**

The specified approvals apply only when the corresponding mark is printed on the product. You can check which of the following approvals have been granted for your product by the markings on the type plate.

Approvals for shipbuilding are not printed on the device type plate.

## Current approvals on the Internet

You will also find the current approvals for the product on the Internet pages of Siemens Industry Online Support under the following entry ID:

33118791 (http://support.automation.siemens.com/WW/view/en/33118791)
→ "Entry list" tab, entry type "Certificates"

## Approvals for SIMATIC NET products

You will find an overview of the approvals for SIMATIC NET products including approvals for shipbuilding on the Internet pages of Siemens Industry Online Support under the following entry ID:

57337426 (http://support.automation.siemens.com/WW/view/en/57337426)

## EC directives

SIMATIC NET products meet the requirements and aims of the following EC directives.

## EMC directive (electromagnetic compatibility)

The SIMATIC NET products described in these operating instructions meet the requirements of EC directive 2004/108/EC "Electromagnetic Compatibility" for the following areas of application:

| Field of application | Requirements | |
|---|---|---|
| | Emission | Immunity to interference |
| Industry | EN 61000-6-4 : 2007 | EN 61000-6-2 : 2005 |

## EU declaration of conformity

You will find EC declaration of conformity for these products on the Internet pages of Siemens Industry Online Support (http://support.automation.siemens.com/WW/view/en/33118389/134200).

## Explosion protection directive (ATEX)

The product meets the requirements of the EC directive 94/9/EC "Equipment and Protective Devices for Use in Potentially Explosive Atmospheres".

You will find the current versions of the standards in the currently valid ATEX certificates.

### II 3 G Ex nA IICT4 Gc

The IE switches SCALANCE X-200 meet the requirements according to II 3 G Ex nA IIC T4 Gc, certificate no.: KEMA 07ATEX0145 X:

| | |
|---|---|
| • X204-2<br>• X204-2TS<br>• X204-2FM<br>• X204-2LD<br>• X204-2LD TS<br>• X206-1<br>• X206-1LD<br>• X208<br>• X208PRO<br>• X212-2<br>• X212-2LD<br>• X216<br>• X224 | • XF204<br>• XF204-2<br>• XF206-1<br>• XF208<br>• X200-4P IRT<br>• X201-3P IRT<br>• X201-3P IRT PRO<br>• X202-2IRT<br>• X202-2P IRT<br>• X202-2P IRT PRO<br>• X204IRT<br>• X204IRT PRO<br>• XF204IRT |

These products meet the requirements of the following standards:

- EN 60079-15
- EN 60079-0

### II 3 (2) G Ex nA [op is] IIC T4

The IE switches SCALANCE X-200 listed below have additional approval according to II 3 (2) G Ex nA [op is] IIC T4, certificate no.: DEKRA11ATEX0060 X:

| | |
|---|---|
| • X204-2<br>• X204-2TS<br>• X204-2FM<br>• X206-1<br>• X212-2 | • XF204-2<br>• XF206-1<br>• X202-2IRT |

These products meet the requirements of the following standards:

- EN 60079-0
- EN 60079-15
- EN 60079-28

## IECEx

The SIMATIC NET products meet the requirements of explosion protection according to IECEx.

IECEx classification:

Ex nA IIC T4 Gc

DEK 14.0025X

The products meet the requirements of the following standards:

- IEC 60079-15 (Explosive atmospheres - Part 15: Equipment protection by type of protection "n")
- IEC 60079-0 (Explosive atmospheres - Part 0: Equipment - General requirements)

You will find the current versions of the standards in the currently valid IECEx certificates.

The following SCALANCE X-200 IE switches meet these requirements:

| | |
|---|---|
| • X204-2<br>• X204-2TS<br>• X204-2FM<br>• X204-2LD<br>• X204-2LD TS<br>• X206-1<br>• X206-1LD<br>• X208<br>• X208PRO<br>• X212-2<br>• X212-2LD<br>• X216<br>• X224 | • XF204<br>• XF204-2<br>• XF206-1<br>• XF208<br>• X200-4P IRT<br>• X201-3P IRT<br>• X201-3P IRT PRO<br>• X202-2IRT<br>• X202-2P IRT<br>• X202-2P IRT PRO<br>• X204IRT<br>• X204IRT PRO<br>• XF204IRT |

## IECEx (optical radiation)

The SIMATIC NET products meet the requirements of explosion protection according to IECEx.

IECEx classification:

Ex nA [op is Gb] IIC T4 Gc

DEK 14.0026X

The products meet the requirements of the following standards:

- IEC 60079-15 (Explosive atmospheres - Part 15: Equipment protection by type of protection "n"
- IEC 60079-0 (Explosive atmospheres - Part 0: Equipment - General requirements)
- IEC 60079-28 (Explosive atmospheres - Part 28: Protection of equipment and transmission systems using with optical radiation)

You will find the current versions of the standards in the currently valid IECEx certificates.

The following SCALANCE X-200 IE switches also meet these requirements:

| | |
|---|---|
| • X204-2<br>• X204-2TS<br>• X204-2FM<br>• X206-1<br>• X212-2 | • XF204-2<br>• XF206-1<br>• X202-2IRT |

## FM

The product meets the requirements of the standards:

- Factory Mutual Approval Standard Class Number 3611
- FM Hazardous (Classified) Location Electrical Equipment:
  Non Incendive / Class I / Division 2 / Groups A,B,C,D / T4 and
  Non Incendive / Class I / Zone 2 / Group IIC / T4

## cULus approval for industrial control equipment

cULus Listed IND. CONT. EQ.

Underwriters Laboratories Inc. complying with

- UL 508
- CSA C22.2 No. 142-M1987

Report no. E85972

## cULus Approval for Information Technology Equipment

cULus Listed I. T. E.

Underwriters Laboratories Inc. complying with

- UL 60950-1 (Information Technology Equipment)
- CSA C22.2 No. 60950-1-03

Report no. E115352

## cULus Approval Hazardous Location

cULus Listed I. T. E. FOR HAZ. LOC.

Underwriters Laboratories Inc. complying with

- UL 60950-1 (Information Technology Equipment)
- ANSI/ISA 12.12.01-2007
- CSA C22.2 No. 213-M1987

Approved for use in
Cl. 1, Div. 2, GP A, B, C, D T4
Cl. 1, Zone 2, GP IIC T4

Report no. E240480

## CSA Approval for Information Technology Equipment

CSA Certification Mark

Canadian Standard Association CSA C22.2 No. 60950-1-03

## CSA Approval for Industrial Control Equipment

CSA Certification Mark

Canadian Standard Association CSA C22.2 No. 142-1987

## FDA and IEC approvals

The following SCALANCE X-200 switches meet the FDA and IEC requirements listed below:

- X204-2LD
- X204-2LD TS
- X206-1LD
- X212-2LD

Figure 6-1 FDA and IEC approvals

| CAUTION |
| --- |
| Use of controls or adjustments or performance of procedures other than those specified herein may result in hazardous radiation exposure. |

## RCM

The product meets the requirements of the AS/NZS 2064 standard (Class A).

## KC (Korean Standard)

The products meet the requirements of the "Korean Standard".

## Marking for the customs union

EAC (Eurasian Conformity)

Customs union of Russia, Belarus and Kazakhstan

Declaration of the conformity according to the technical regulations of the customs union (TR CU)

## Railway approval

The TS variant of the device meets the requirements of the Railway standard EN 50155:2007 "Railway Applications - Electronic equipment used on rolling stock".

# Technical specifications

7

## Construction

| Type | Dimensions (W x H x D) in mm | Weight in g | Installation options<br>- DIN rail<br>- S7-300 standard rail<br>- Wall mounting |
|---|---|---|---|
| X204-2 | 60 x 125 x 124 | 780 | + |
| X204-2TS | 60 x 125 x 124 | 780 | + |
| X204-2FM | 60 x 125 x 124 | 780 | + |
| X204-2LD | 60 x 125 x 124 | 780 | + |
| X204-2LD TS | 60 x 125 x 124 | 780 | + |
| X206-1 | 60 x 125 x 124 | 780 | + |
| X206-1LD | 60 x 125 x 124 | 780 | + |
| X208 | 60 x 125 x 124 | 780 | + |
| X208PRO | 90 x 125 x 124 | 1000 | + |
| X212-2 | 120 x 125 x 124 | 1200 | + |
| X212-2LD | 120 x 125 x 124 | 1200 | + |
| X216 | 120 x 125 x 124 | 1200 | + |
| X224 | 180 x 125 x 124 | 1600 | + |
| XF204 | 75 x 125 x 73 | 250 | DIN rail mounting only. |
| XF204-2 | 75 x 125 x 73 | 250 | DIN rail mounting only. |
| XF206-1 | 75 x 125 x 73 | 250 | DIN rail mounting only. |
| XF208 | 75 x 125 x 73 | 250 | DIN rail mounting only. |
| X200-4P IRT | 60 x 125 x 124 | 780 | + |
| X201-3P IRT | 60 x 125 x 124 | 780 | + |
| X201-3P IRT PRO | 90 x 125 x 124 | 1000 | + |
| X202-2IRT | 60 x 125 x 124 | 780 | + |
| X202-2P IRT | 60 x 125 x 124 | 780 | + |
| X202-2P IRT PRO | 90 x 125 x 124 | 1000 | + |
| X204IRT | 60 x 125 x 124 | 780 | + |
| X204IRT PRO | 90 x 125 x 124 | 1000 | + |
| XF204IRT | 75 x 125 x 73 | 250 | DIN rail mounting only. |

## Ports

| Type | Connectors for end devices or network components via twisted pair<br>RJ-45 jacks with MDI X pinning<br>10/100 Mbps (half / full duplex) 1) | Connections for end devices or network components via FO cable<br>BFOC sockets<br>(100 Mbps, full duplex to 100BaseFX) | Connectors for power supply<br>4-pin plug-in terminal block, redundant 2) | Connectors for signaling contact<br>2-pin plug-in terminal block 3) |
|---|---|---|---|---|
| X204-2 | 4 | 2 | 1 | 1 |
| X204-2TS | 4 | 2 | 1 | 1 |
| X204-2FM | 4 | 2 | 1 | 1 |
| X204-2LD | 4 | 2 | 1 | 1 |
| X204-2LD TS | 4 | 2 | 1 | 1 |
| X206-1 | 6 | 1 | 1 | 1 |
| X206-1LD | 6 | 1 | 1 | 1 |
| X208 | 8 | - | 1 | 1 |
| X208PRO | 8 1) | - | 1 2) | 1 3) |
| X212-2 | 12 | 2 | 1 | 1 |
| X212-2LD | 12 | 2 | 1 | 1 |
| X216 | 16 | - | 1 | 1 |
| X224 | 24 | - | 1 | 1 |
| XF204 | 4 | - | 1 | 1 |
| XF204-2 | 4 | 2 | 1 | 1 |
| XF206-1 | 6 | 1 | 1 | 1 |
| XF208 | 8 | - | 1 | 1 |
| X202-2IRT | 2 | 2 | 1 | 1 |
| X204IRT | 4 | - | 1 | 1 |
| XF204IRT | 4 | - | 1 | 1 |

1) Exception X208PRO: Connection via 4-pin, d-coded M12 socket, IP65/67.

2) Exception X208PRO: Connection via 4-pin, a-coded M12 socket, IP65/67.

3) Exception X208PRO: Connection via 5-pin, b-coded M12 socket, IP65/67.

| Type | Connectors for end devices or network components via twisted pair<br>RJ-45 jacks with MDI X pinning<br>10/100 Mbps (half / full duplex) | Connections for end devices or network components via FO cable<br>SC RJ jacks (push-pull) (100 Mbps, full duplex to 100BaseFX) | Connector for power supply<br>4-pin plug-in terminal block, redundant | Connector for signaling contact<br>2-pin plug-in terminal block |
|---|---|---|---|---|
| X200-4P IRT | - | 4 | 1 | 1 |
| X201-3P IRT | 1 | 3 | 1 | 1 |
| X202-2P IRT | 2 | 2 | 1 | 1 |

| Type | Connectors for end devices or network components via twisted pair<br>RJ-45 jacks with MDI X pinning<br>10/100 Mbps half / full duplex | Connections for end devices or network components via FO cable<br>SC RJ jacks (push-pull), 100 Mbps, full duplex to 100BaseFX | Connector for power supply<br>5-pin Power Plug PRO connector (male) | Connector for signaling contact<br>5-pin b-coded M12 connector (male) |
|---|---|---|---|---|
| X201-3P IRT PRO | 1 | 3 | 2 | 1 |
| X202-2P IRT PRO | 2 | 2 | 2 | 1 |
| X204IRT PRO | 4 | - | 2 | 1 |

## Signaling contact

The following applies to all devices:

- Voltage for the signaling contact: 24 VDC
- Current through the signaling contact: maximum 100 mA

## Electrical data

| Type | Supply voltage with redundant connection<br>Rated voltage 12 to 24 VDC SELV<br>Voltage range 10 VDC to 28.8 VDC<br>Permitted voltage range incl. total ripple 10 VDC to 30.2 VDC | Power loss at 12 VDC | Current consumption at rated voltage | Overcurrent protection at input<br>Non-replaceable fuse (F) |
|---|---|---|---|---|
| X204-2TS | + | 6.60 W | 600 mA | 3.0 A / 32 V |
| X204-2LD TS | + | 6.60 W | 600 mA | 3.0 A / 32 V |

| Type | Supply voltage with redundant connection<br>Rated voltage 24 VDC<br>Voltage range 19.2 VDC to 28.8 VDC<br>Permitted voltage range incl. total ripple 18.5 VDC to 30.2 VDC | Power loss at 24 VDC | Current consumption at rated voltage | Overcurrent protection at input<br>PTC resettable fuse |
|---|---|---|---|---|
| X204-2 | + | 6.36 W | 265 mA | 600 mA / 60 V |
| X204-2FM | + | 6.36 W | 265 mA | 600 mA / 60 V |
| X204-2LD | + | 6.36 W | 265 mA | 600 mA / 60 V |
| X206-1 | + | 5.28 W | 220 mA | 600 mA / 60 V |
| X206-1LD | + | 5.28 W | 220 mA | 600 mA / 60 V |
| X208 | + | 3.84 W | 185 mA | 600 mA / 60 V |
| X208PRO | + | 4.4 W | 185 mA | 600 mA / 60 V |
| X212-2 | + | 7.92 W | 330 mA | 1.1 A / 33 V |
| X212-2LD | + | 7.92 W | 330 mA | 1.1 A / 33 V |
| X216 | + | 5.76 W | 240 mA | 1.1 A / 33 V |
| X224 | + | 8.40 W | 350 mA | 1.1 A / 33 V |
| XF204 | + | 2.64 W | 110 mA | 1.1 A / 33 V |
| XF204-2 | + | 5.28 W | 220 mA | 1.1 A / 33 V |
| XF206-1 | + | 4.08 W | 170 mA | 1.1 A / 33 V |
| XF208 | + | 3.12 W | 130 mA | 1.1 A / 33 V |
| X200-4P IRT | + | 9.6 W | 400 mA | 1.1 A / 33 V |
| X201-3P IRT | + | 8.4 W | 350 mA | 1.1 A / 33 V |
| X201-3P IRT PRO | no redundancy | 7.2 W | 300 mA | 1.1 A / 33 V |
| X202-2IRT | + | 6.0 W | 300 mA | 600 mA / 60 V |
| X202-2P IRT | + | 7.2 W | 300 mA | 1.1 A / 33 V |
| X202-2P IRT PRO | no redundancy | 7.2 W | 300 mA | 1.1 A / 33 V |
| X204IRT | + | 4.8 W | 200 mA | 600 mA / 60 V |
| X204IRT PRO | no redundancy | 4.8 W | 200 mA | 600 mA / 60 V |
| XF204IRT | + | 4.8 W | 200 mA | 600 mA / 60 V |

## Optical data

| Type | Transmitter output (optical) | | Receiver input | |
|---|---|---|---|---|
| | min. [dBm] | max. [dBm] | Sensitivity min. [dBm] | Input power max. [dBm] |
| X204-2<br>X204-2TS<br>X204-2FM<br>X206-1<br>X212-2<br>XF204-2<br>XF206-1<br>X202-2IRT | -19 | -14 | -32 | -3 |
| X204-2LD<br>X204-2LD TS<br>X206-1LD<br>X212-2LD | -15 | -8 | -34 | -3 |
| X200-4P IRT<br>X201-3P IRT<br>X201-3P IRT PRO<br>X202-2P IRT<br>X202-2P IRT PRO | -8 | -2 | -23 | +1 |

## Permitted cable lengths - copper

### For devices with degree of protection IP20/30

The following cables are permitted in the specified lengths:

- **0 to 55 m:**

  IE TP torsion cable with IE FC RJ-45 Plug 180

  – Alternative:
    0 to 45 m IE TP Torsion Cable + 10 m TP Cord via IE Outlet RJ-45

- **0 to 85 m:**

  IE FC TP marine / trailing / flexible / FRNC / festoon / food cable with IE FC RJ-45 Plug 180

  – Alternative:

    0 to 75 m IE FC TP marine / trailing / flexible / FRNC / festoon / food cable + 10 m TP cord over IE FC outlet RJ-45

- **0 to 100 m:**

  IE FC TP standard cable with IE FC RJ-45 plug 180

  – Alternative:

    0 to 90 m IE FC TP standard cable + 10 m TP cord via IE FC outlet RJ-45

**For devices with the "PRO" supplement (degree of protection IP65)**

With these devices, splitting of the cables (as above) is not permitted. The following cables are permitted in the specified lengths:

- **0 to 55 m:**

  IE TP torsion cable with IE FC RJ-45 Plug 180

- **0 to 85 m:**

  IE FC TP marine / trailing / flexible / FRNC / festoon / food cable with IE FC RJ-45 Plug 180

- **0 to 100 m:**

  IE FC TP standard cable with IE FC RJ-45 plug 180

**For X208PRO (degree of protection IP65/67)**

With the X208PRO, splitting of the cables (as above) is not permitted either. The following cables are permitted in the specified lengths:

- **0 to 55 m:**

  IE TP torsion cable with IE FC M12 Plug PRO

- **0 to 85 m:**

  IE FC TP marine / trailing / flexible / FRNC / festoon / food cable with IE FC M12 Plug PRO

- **0 to 100 m:**

  IE FC TP standard cable with IE FC M12 plug PRO

## Permitted cable lengths - fiber-optic

| Type | 1 - 50 m<br>980/1000 plastic optical fiber (POF) | 1 - 100 m<br>200/230 polymer cladded fiber (PCF)<br>6 dB max. permitted cable attenuation with 3 dB link power margin | 0 - 4000<br>Glass FO cable<br>62.5/125 µm glass fibers<br>0 - 5000<br>Glass FO cable<br>50/125 µm glass fibers<br>≤ 1 dB/km at 1300 nm;<br>600 MHz x km;<br>6 dB max. permitted cable attenuation with 3 dB link power margin | 0 - 26000 m<br>glass FO cable<br>9/125 µm single mode fiber;<br>0.5 dB/km at 1300 nm;<br>13 dB max. permitted cable attenuation with 2 dB link power margin |
|---|---|---|---|---|
| X204-2 | - | - | + | - |
| X204-2TS | - | - | + | - |
| X204-2FM | - | - | + | - |
| X204-2LD | - | - | - | + |
| X204-2LD TS | - | - | - | + |
| X206-1 | - | - | + | - |
| X206-1LD | - | - | - | + |
| X212-2 | - | - | + | - |
| X212-2LD | - | - | - | + |
| XF204-2 | - | - | + | - |
| XF206-1 | - | - | + | - |
| X200-4P IRT | + | + | - | - |
| X201-3P IRT | + | + | - | - |
| X201-3P IRT PRO | + | + | - | - |
| X202-2IRT | - | - | + | - |
| X202-2P IRT | + | + | - | - |
| X202-2P IRT PRO | + | + | - | - |

## Degree of protection and MTBF

| Type | Degree of protection | MTBF |
|---|---|---|
| X204-2 | IP30 | 64 years |
| X204-2TS | IP20 | 63 years |
| X204-2FM | IP30 | 87 years |
| X204-2LD | IP30 | 60 years |
| X204-2LD TS | IP20 | 85 years |
| X206-1 | IP30 | 72 years |
| X206-1LD | IP30 | 69 years |
| X208 | IP30 | 83 years |
| X208PRO | IP65/67 | 83 years |
| X212-2 | IP30 | 46 years |
| X212-2LD | IP30 | 43 years |
| X216 | IP30 | 52 years |
| X224 | IP30 | 45 years |
| XF204 | IP20 | 48 years |
| XF204-2 | IP20 | 60 years |
| XF206-1 | IP20 | 69 years |
| XF208 | IP20 | 54 years |
| X200-4P IRT | IP30 | 73 years |
| X201-3P IRT | IP30 | 78 years |
| X201-3P IRT PRO | IP65 | 85 years |
| X202-2IRT | IP30 | 62 years |
| X202-2P IRT | IP30 | 84 years |
| X202-2P IRT PRO | IP65 | 85 years |
| X204IRT | IP30 | 81 years |
| X204IRT PRO | IP65 | 99 years |
| XF204IRT | IP20 | 81 years |

## Switching properties

| Type | Max. number of learn-able addresses | Aging time | Switching technique | Latency |
|---|---|---|---|---|
| X-200 | 8000 | 30 s | Store and forward | 5 µs |
| XF-200 | 8000 | 30 s | Store and forward | 5 µs |
| X-200IRT | 4096 | 30 s (configurable) | Store and forward / cut through | < 5 µs |
| XF204IRT | 4096 | 30 s (configurable) | Store and forward / cut through | < 5 µs |

## Permitted ambient conditions

**Note**

**Note the mounting position for XF and TS devices**

With the following switches an ambient temperature of maximum +40 °C is permitted if the device is installed on a vertical rail:

- XF204
- XF208
- XF204-2
- XF206-1
- XF204IRT
- X204-2TS
- X204-2LD TS

| Type | Operating temperature | Storage/transport temperature | Rel. humidity in operation (no condensation) | Operating altitude at max. xx °C ambient temperature |
|---|---|---|---|---|
| X204-2 | -40 °C to +60 °C | -40 °C to +70 °C | ‹ 95 % | 2000 m at max. 56 °C<br>3000 m at max. 50 °C |
| X204-2TS | -40 °C to +70 °C *) | -40 °C to +70 °C | ‹ 95 % | 2000 m at max. 56 °C<br>3000 m at max. 50 °C |
| X204-2FM | -40 °C to +60 °C | -40 °C to +70 °C | ‹ 95 % | 2000 m at max. 56 °C<br>3000 m at max. 50 °C |
| X204-2LD | -40 °C to +60 °C | -40 °C to +70 °C | ‹ 95 % | 2000 m at max. 56 °C<br>3000 m at max. 50 °C |
| X204-2LD TS | -40 °C to +70 °C *) | -40 °C to +70 °C | ‹ 95 % | 2000 m at max. 56 °C<br>3000 m at max. 50 °C |
| X206-1 | -40 °C to +60 °C | -40 °C to +70 °C | ‹ 95 % | 2000 m at max. 56 °C<br>3000 m at max. 50 °C |
| X206-1LD | -40 °C to +60 °C | -40 °C to +70 °C | ‹ 95 % | 2000 m at max. 56 °C<br>3000 m at max. 50 °C |
| X208 | -40 °C to +60 °C | -40 °C to +70 °C | ‹ 95 % | 2000 m at max. 56 °C<br>3000 m at max. 50 °C |
| X208PRO | -40 °C to +70 °C | -40 °C to +70 °C | ‹ 95 % | 2000 m at max. 56 °C<br>3000 m at max. 50 °C |
| X212-2 | -40 °C to +60 °C | -40 °C to +70 °C | ‹ 95 % | 2000 m at max. 56 °C<br>3000 m at max. 50 °C |
| X212-2LD | -40 °C to +60 °C | -40 °C to +70 °C | ‹ 95 % | 2000 m at max. 56 °C<br>3000 m at max. 50 °C |
| X216 | -40 °C to +60 °C | -40 °C to +70 °C | ‹ 95 % | 2000 m at max. 56 °C<br>3000 m at max. 50 °C |
| X224 | -40 °C to +60 °C | -40 °C to +70 °C | ‹ 95 % | 2000 m at max. 56 °C<br>3000 m at max. 50 °C |
| XF204 *) | -40 °C to +60 °C | -40 °C to +70 °C | ‹ 95 % | 2000 m at max. 56 °C<br>3000 m at max. 50 °C |
| XF204-2 | -40 °C to +60 °C *) | -40 °C to +70 °C | ‹ 95 % | 2000 m at max. 56 °C<br>3000 m at max. 50 °C |
| XF206-1 | -40 °C to +60 °C *) | -40 °C to +70 °C | ‹ 95 % | 2000 m at max. 56 °C<br>3000 m at max. 50 °C |
| XF208 | -40 °C to +60 °C *) | -40 °C to +70 °C | ‹ 95 % | 2000 m at max. 56 °C<br>3000 m at max. 50 °C |

| | | | | |
|---|---|---|---|---|
| X200-4P IRT | -25 °C to +40 °C | -40 °C to +70 °C | ‹ 95 % | 2000 m at max. 35 °C<br>3000 m at max. 30 °C |
| X201-3P IRT | -25 °C to +50 °C | -40 °C to +70 °C | ‹ 95 % | 2000 m at max. 45 °C<br>3000 m at max. 40 °C |
| X201-3P IRT PRO | -25 °C to +60 °C | -40 °C to +70 °C | ‹ 95 % | 2000 m at max. 56 °C<br>3000 m at max. 50 °C |
| X202-2IRT | -40 °C to +60 °C | -40 °C to +70 °C | ‹ 95 % | 2000 m at max. 56 °C<br>3000 m at max. 50 °C |
| X202-2P IRT | -25 °C to +60 °C | -40 °C to +70 °C | ‹ 95 % | 2000 m at max. 56 °C<br>3000 m at max. 50 °C |
| X202-2P IRT PRO | -25 °C to +60 °C | -40 °C to +70 °C | ‹ 95 % | 2000 m at max. 56 °C<br>3000 m at max. 50 °C |
| X204IRT | -40 °C to +70 °C | -40 °C to +70 °C | ‹ 95 % | 2000 m at max. 56 °C<br>3000 m at max. 50 °C |
| X204IRT PRO | -25 °C to +70 °C | -40 °C to +70 °C | ‹ 95 % | 2000 m at max. 56 °C<br>3000 m at max. 50 °C |
| XF204IRT | -40 °C to +60 °C *) | -40 °C to +70 °C | ‹ 95 % | 2000 m at max. 56 °C<br>3000 m at max. 50 °C |

*) Note the information on the mounting position above.

## Frame delay times

The number of IE Switches X-200 connected in a line influences the frame delay.

---

**Note**

**Frame delay time with X-200 without IRT**

When a frame passes through X-200 IE switches, it is delayed by the Store&Forward function of the X-200 IE switches.

- With a 64 byte frame length by approx. 10 microseconds (at 100 Mbps).
- With a 1500 byte frame length by approx. 130 microseconds (at 100 Mbps).

This means that the more X-200 IE switches the frame passes through, the longer the frame delay.

---

**Note**

**Frame delay time with X-200 with IRT**

The more X-200IRT IE switches a frame runs through, the higher the frame delay. By using the "cut through" switching mechanism, the X-200IRT IE switches are ideal to meet the real-time requirements of PROFINET.

Cut through is, however, not possible:

- Between a port set to 10 Mbps and a port set to 100 Mbps.
- When two packets are to be sent at the same time on one port.
  In this case, an X-200 IE switch changes to Store&Forward and the delay increases.

---

# Dimension drawings

A

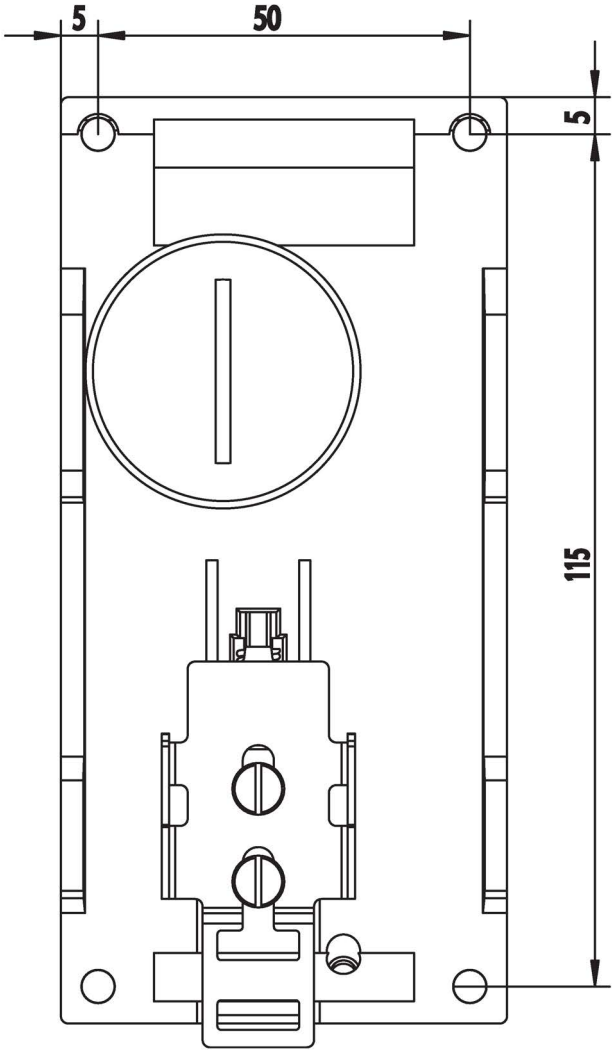


Figure A-1 Drilling pattern SCALANCE X204-2, X204-2TS, X204-2FM, X204-2LD, X204-2LD TS, X206-1, X206-1LD, X208, X200-4P IRT, X201-3P IRT, X202-2IRT, X202-2P IRT, X204IRT

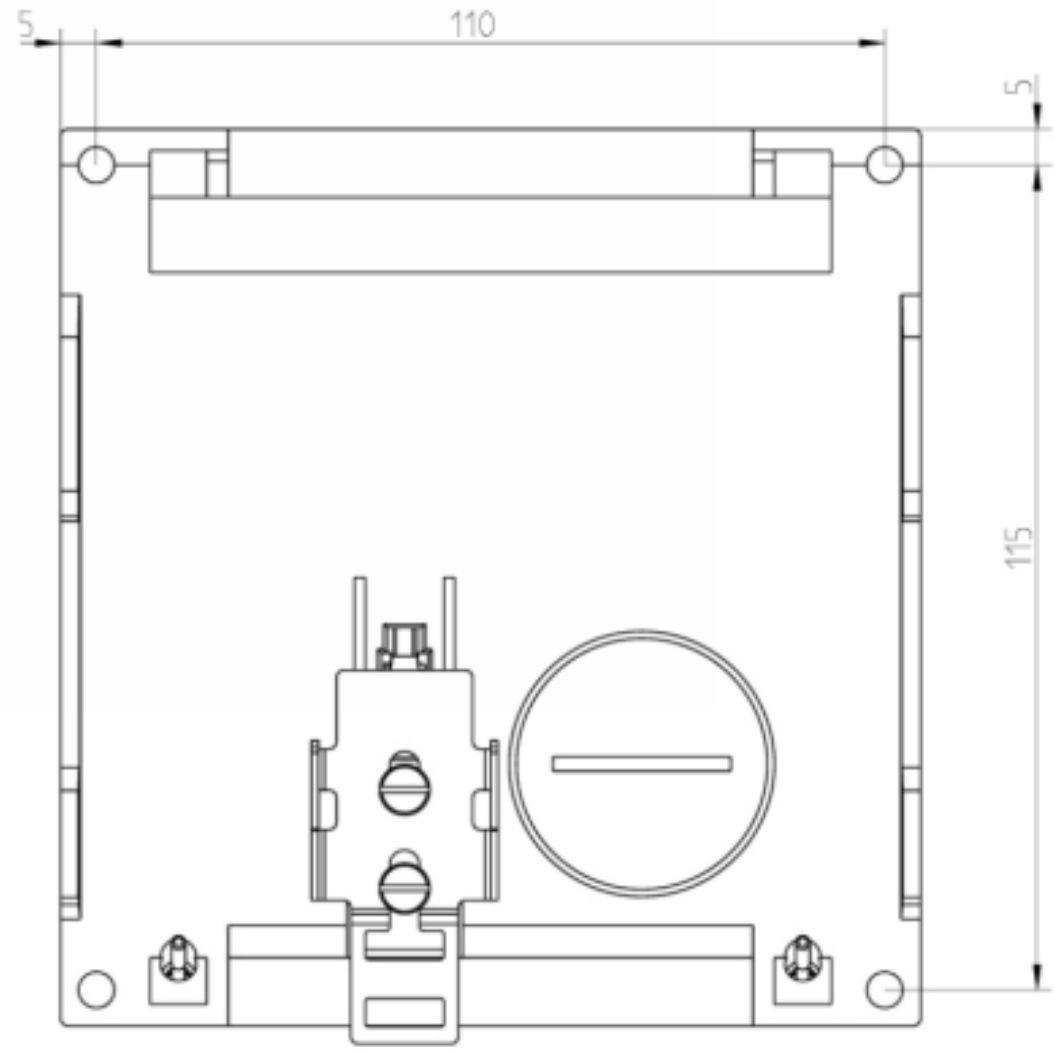


Figure A-2 Drilling pattern SCALANCE X212-2, X212-2LD and X216

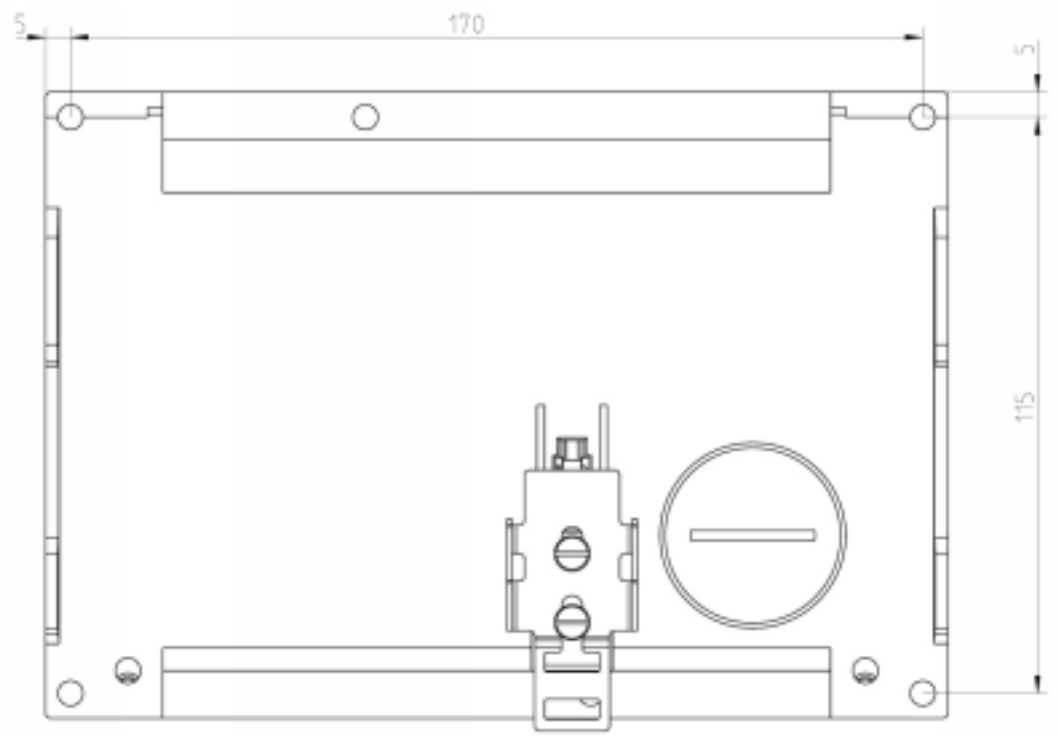


Figure A-3 Drilling pattern SCALANCE X224

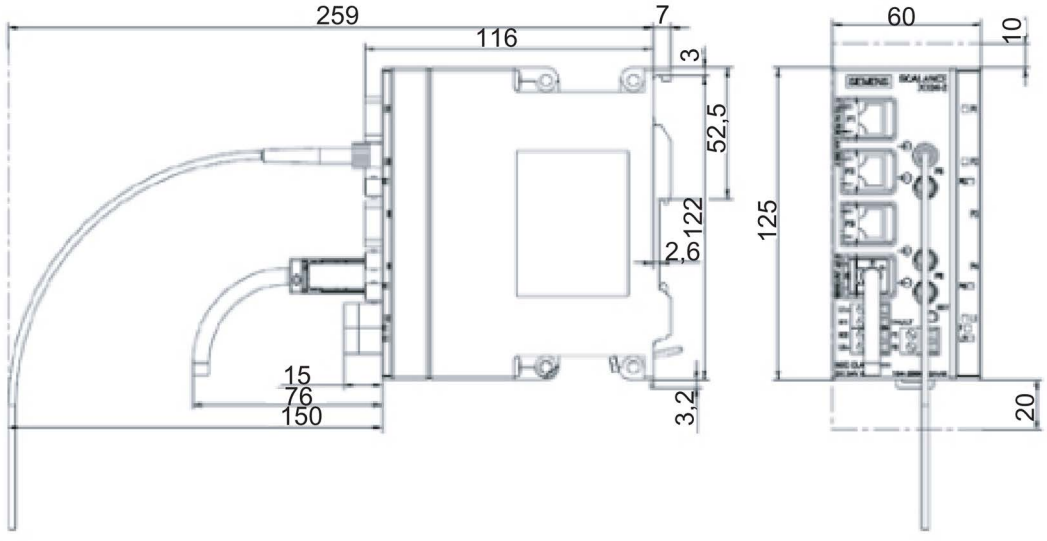


Figure A-4 Side view SCALANCE X-200

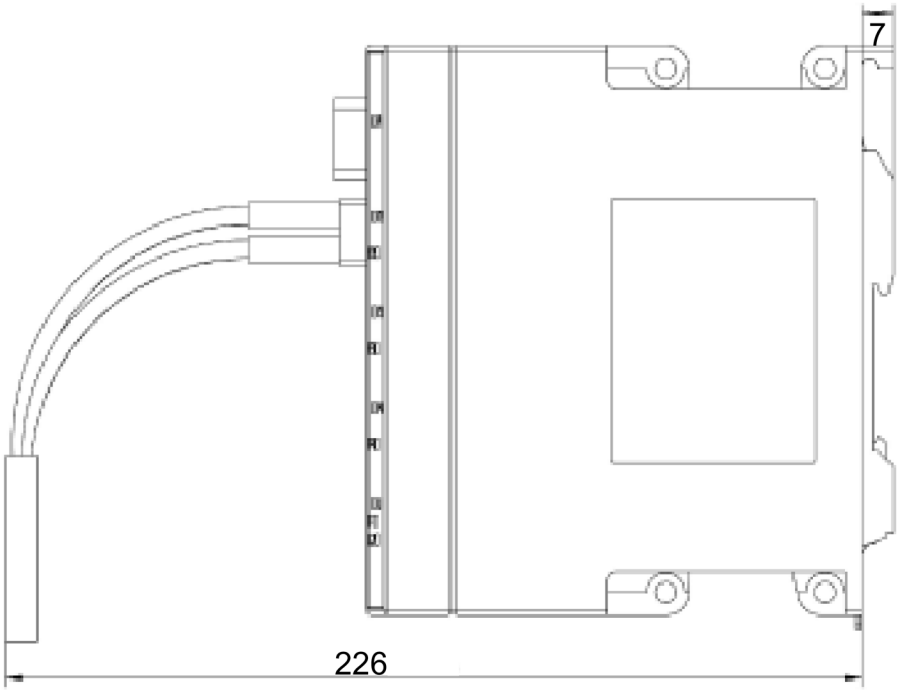


Figure A-5 Side view SCALANCE X-200 POF with POF interface

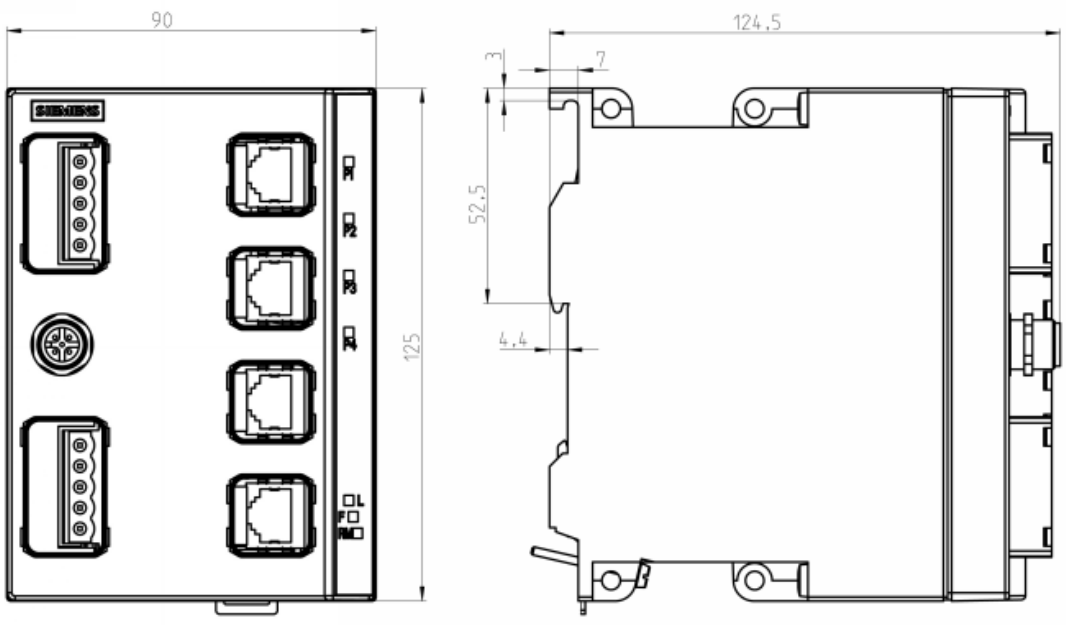


Figure A-6 Dimension drawings of the SCALANCE X208PRO, SCALANCE X201-3P IRT PRO, SCALANCE X202-2P IRT PRO and SCALANCE X204IRT PRO

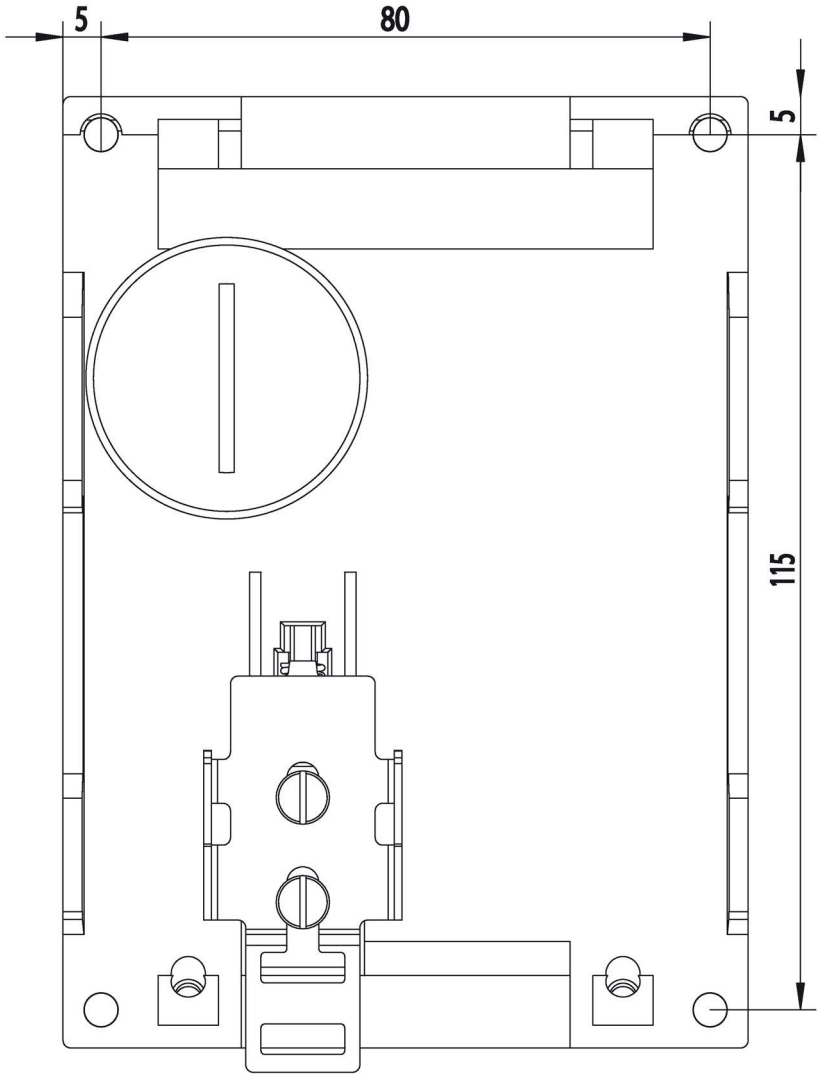


Figure A-7 Drilling pattern of the SCALANCE X208PRO, SCALANCE X201-3P IRT PRO, SCALANCE X202-2P IRT PRO and SCALANCE X204IRT PRO

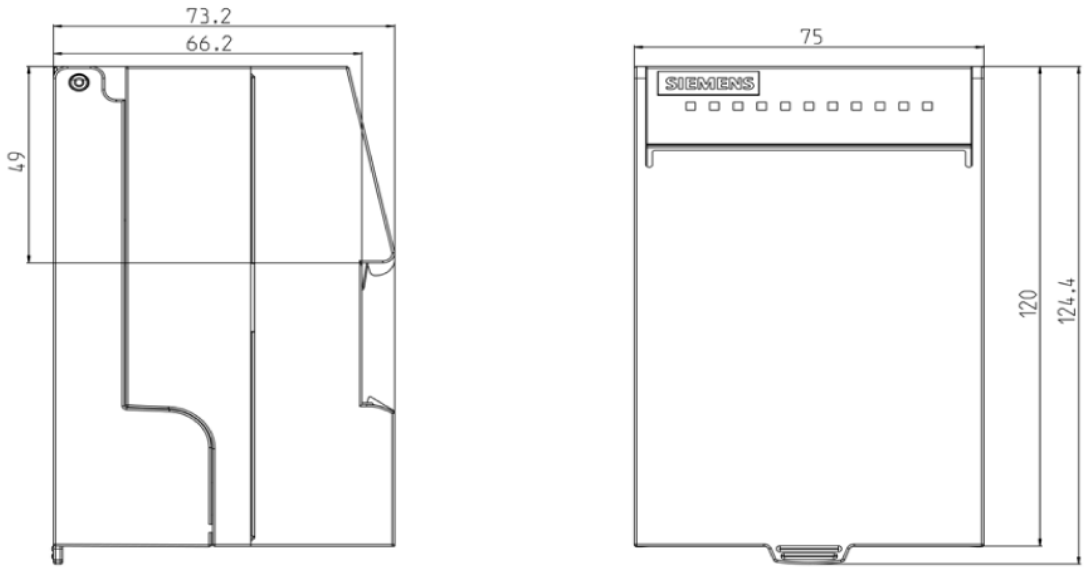


Figure A-8 SCALANCE XF-200 dimension drawings

# Test of mechanical stability

B

## Mechanical stability

| Device type SCALANCE | IEC 60068-2-6 vibration | | IEC 60068-2-27 shock | |
|---|---|---|---|---|
| X204-2 | 5 – 9 Hz: 3.5 mm<br>9 – 500 Hz: 1 g<br>1 octave/min, 20 sweeps | | 15 g, 6 ms duration<br>6 shocks per axis | |
| X204-2TS | 5 – 9 Hz: 3.5 mm<br>9 – 500 Hz: 1 g<br>1 octave/min, 20 sweeps | 5 – 150 Hz: Max. 7.9 g<br>random | 15 g, 6 ms duration<br>6 shocks per axis | 50 g, 30 ms duration<br>6 shocks per axis |
| X204-2FM | 5 – 9 Hz: 3.5 mm<br>9 – 500 Hz: 1 g<br>1 octave/min, 20 sweeps | | 15 g, 6 ms duration<br>6 shocks per axis | |
| X204-2LD | 5 – 9 Hz: 3.5 mm<br>9 – 500 Hz: 1 g<br>1 octave/min, 20 sweeps | | 15 g, 11 ms duration<br>6 shocks per axis | |
| X204-2LD TS | 5 – 9 Hz: 3.5 mm<br>9 – 500 Hz: 1 g<br>1 octave/min, 20 sweeps | 5 – 150 Hz: Max. 7.9 g<br>random | 15 g, 6 ms duration<br>6 shocks per axis | 50 g, 30 ms duration<br>6 shocks per axis |
| X206-1 | 5 – 9 Hz: 3.5 mm<br>9 – 500 Hz: 1 g<br>1 octave/min, 20 sweeps | | 15 g, 6 ms duration<br>6 shocks per axis | |
| X206-1 LD | 5 – 9 Hz: 3.5 mm<br>9 – 500 Hz: 1 g<br>1 octave/min, 20 sweeps | | 15 g, 6 ms duration<br>6 shocks per axis | |
| X208 | 5 – 9 Hz: 3.5 mm<br>9 – 500 Hz: 1 g<br>1 octave/min, 20 sweeps | | 15 g, 6 ms duration<br>6 shocks per axis | |
| X208PRO | 5 - 9 Hz 3.5 mm<br>9 - 150 Hz 1 g<br>10 cycles | | 15 g, 11 ms duration<br>6 shocks/axis | |
| X212-2 | 5 – 9 Hz: 3.5 mm<br>9 – 500 Hz: 1 g<br>1 octave/min, 20 sweeps | | 15 g, 11 ms duration<br>6 shocks per axis | |
| X212-2LD | 5 – 9 Hz: 3.5 mm<br>9 – 500 Hz: 1 g<br>1 octave/min, 20 sweeps | | 15 g, 6 ms duration<br>6 shocks per axis | |
| X216 | 5 – 9 Hz: 3.5 mm<br>9 – 500 Hz: 1 g<br>1 octave/min, 20 sweeps | | 15 g, 11 ms duration<br>6 shocks per axis | |
| X224 | 5 – 9 Hz: 3.5 mm<br>9 – 500 Hz: 1 g<br>1 octave/min, 20 sweeps | | 15 g, 11 ms duration<br>6 shocks per axis | |
| XF204 | 5 – 9 Hz: 3.5 mm<br>9 – 500 Hz: 1 g<br>1 octave/min, 20 sweeps | | 15 g, 6 ms duration<br>6 shocks per axis | |
| XF204-2 | 5 – 9 Hz: 3.5 mm<br>9 – 500 Hz: 1 g<br>1 octave/min, 20 sweeps | | 15 g, 6 ms duration<br>6 shocks per axis | |

| Device type SCALANCE | IEC 60068-2-6 vibration | IEC 60068-2-27 shock |
|---|---|---|
| XF206-1 | 5 – 9 Hz: 3.5 mm<br>9 – 500 Hz: 1 g<br>1 octave/min, 20 sweeps | 15 g, 6 ms duration<br>6 shocks per axis |
| XF208 | 5 – 9 Hz: 3.5 mm<br>9 – 500 Hz: 1 g<br>1 octave/min, 20 sweeps | 15 g, 6 ms duration<br>6 shocks per axis |
| X200-4P IRT | 5 – 9 Hz: 3.5 mm<br>9 – 500 Hz: 1 g<br>1 octave/min, 20 sweeps | 15 g, 11 ms duration<br>6 shocks per axis |
| X201-3P IRT | 5 – 9 Hz: 3.5 mm<br>9 – 500 Hz: 1 g<br>1 octave/min, 20 sweeps | 15 g, 11 ms duration<br>6 shocks per axis |
| X201-3P IRT PRO | 5 – 9 Hz: 3.5 mm<br>9 – 150 Hz: 1 g<br>10 cycles per axis | 15 g, 11 ms duration<br>6 shocks per axis |
| X202-2IRT | 10 - 58 Hz: 0.075 mm<br>58 - 500 Hz: 1 g<br>10 cycles per axis | 10 g, 16 ms duration<br>6 shocks per axis |
| X202-2P IRT | 5 – 9 Hz: 3.5 mm<br>9 – 500 Hz: 1 g<br>1 octave/min, 20 sweeps | 15 g, 11 ms duration<br>6 shocks per axis |
| X202-2P IRT PRO | 5 – 9 Hz: 3.5 mm<br>9 – 150 Hz: 1 g<br>10 cycles per axis | 15 g, 11 ms duration<br>6 shocks per axis |
| X204IRT | 10 - 58 Hz: 0.075 mm<br>58 - 500 Hz: 1 g<br>10 cycles per axis | 10 g, 16 ms duration<br>6 shocks per axis |
| X204IRT PRO | 5 – 9 Hz: 3.5 mm<br>9 – 150 Hz: 1 g<br>10 cycles per axis | 15 g, 11 ms duration<br>6 shocks per axis |
| XF204IRT | 10 - 58 Hz: 0.075 mm<br>58 - 500 Hz: 1 g<br>10 cycles per axis | 10 g, 16 ms duration<br>6 shocks per axis |

**Note**

The interfaces of the X-200 IE switches can be divided into groups each with 4 ports:

- P1 to P4
- P5 to P8
- P9 to P12
- etc.

If only ports of different port groups are used, the device meets the requirements for Environment B in compliance with IEEE 802.3, Section 33.4.1.1. If ports of the same port group are used, the requirements for Environment A are met.

# Training, Service & Support

C

## Service & Support

In addition to the product documentation, the comprehensive online information platform of Siemens Automation Customer Support supports at any time and at any location in the world. You will find the Service & Support pages on the Internet at the following address:

(http://support.automation.siemens.com/WW/llisapi.dll?func=cslib.csinfo2&aktprim=99&lang=en)

Apart from news, you will also find the following information there:

- Product information, Product Support, Applications & Tools
- Technical Forum
- Technical Support - Ask the Siemens experts
- Our service offer:
  - Technical Consulting, Engineering support
  - Field Service
  - Spare parts and repairs
  - Maintenance, optimization, modernization and more

You will find contact data on the Internet at the following address:
(http://www.automation.siemens.com/partner/guiwelcome.asp?lang=en)

## See also

(https://support.automation.siemens.com/WW/llisapi.dll?func=cslib.csinfo&lang=en&objid=38718979&caller=view)

## SITRAIN - Siemens training for automation and industrial solutions

With over 300 different courses, SITRAIN covers the entire Siemens product and system spectrum in the field of automation and drive technology. Apart from the classic range of courses, we also offer training tailored for individual needs and a combination of different teaching media and sequences, for example self-learning programs on CD-ROM or on the Internet.

You will find detailed information on the training curriculum and how to contact our customer consultants at the following Internet address:

(www.siemens.com/sitrain)

# Index


## A

Article number
    C-PLUG, 17, 17
    Power Plug PRO, 47
    Redundancy module, 17
    RJ-45 data plug-in connector, 17
    SC RJ plug-in connector, 18
Auto polarity exchange, 55
Autonegotiation, 54, 54

## C

Components of the product, 3
Configuration Manual, 4
Contact, 85

## E

Extension module, 17, 43

## F

Factory settings, 23
Frame delay times, 12
Function, 11

## G

GI-PCF, 59
Glossary, 8

## M

MDI / MDI-X autocrossover, 54, 56

## N

Node localization, 22
Number of connectors, 13

## O

Operating instructions, 4
Order number
    C-PLUG, 25
Overview of the functions, 13

## P

Polarity reversal, 55
Power llimiter, 17, 43
Power Plug PRO
    Article number, 47

## R

Redundancy module, 43

## S

Safety notices
    Use in hazardous areas, 43
    when connecting up, 43
Selection Tool, 6
SET button, 23
SIMATIC NET glossary, 8
SIMATIC NET Selection Tool, 6
Support, 85
System manual, 6

## T

Training, 85